United States
Environmental Protection
Agency

Office of Air Quality
Planning and Standards
Research Triangle Park NC 27711

EPA 450/3-83-018a
March 1984

Air

EPA

Review of New Source Performance Standards for Primary Copper Smelters

Chapters 1 Through 9

EPA 450/3-83-018a

Review of New Source Performance Standards for Primary Copper Smelters

Chapters 1 Through 9

Emission Standards and Engineering Division

U.S. ENVIRONMENTAL PROTECTION AGENCY
Office of Air and Radiation
Office of Air Quality Planning and Standards
Research Triangle Park, North Carolina 27711

March 1984

Environmental Protection
5 Library (5PL-16)
S. Dearborn Street, Room 1670
Chicago, IL 60604

This report has been reviewed by the Emission Standards and Engineering Division of the Office of Air Quality Planning and Standards, EPA, and approved for publication. Mention of trade names or commercial products is not intended to constitute endorsement or recommendation for use. Copies of this report are avialable through the Library Services Office (MD-35), U.S. Environmental Protection Agency, Research Triangle Park, North Carolina 27711, or, for a fee, from National Technical Information Services, 5285 Port Royal Road, Springfield, Virginia 22161.

ENVIRONMENTAL PROTECTION AGENCY

REVIEW OF NEW SOURCE PERFORMANCE STANDARDS

FOR

PRIMARY COPPER SMELTERS

Prepared by:

Jack R. Farmer 11/1/83
(Date)

Jack R. Farmer
Director, Emission Standards and Engineering Division
U.S. Environmental Protection Agency
Research Triangle Park, North Carolina 27711

1. Existing standards of performance for primary copper smelters were promulgated in 1976. Section 111 of the Clean Air Act (42 USC 7411), as amended, directs that the Administrator periodically review promulgated standards.

2. Copies of this document have been sent to the following Federal departments: Labor, Defense, Interior, Health and Human Services, Agriculture, Transportation, Commerce, and Energy; EPA Regional Administrators; and other interested parties.

3. For additional information contact:

   Dr. James U. Crowder
   Industrial Studies Branch (MD-13)
   U.S. Environmental Protection Agency
   Research Triangle Park, NC 27711
   Telephone: (919) 541-5601

4. Copies of this document may be obtained from:

   U.S. EPA Library (MD-35)
   Research Triangle Park, NC 27711

   National Technical Information Service
   5285 Port Royal Road
   Springfield, VA 22161

TABLE OF CONTENTS

		Page
1.	SUMMARY	1-1
	1.1 REGULATORY ALTERNATIVES	1-1
	1.1.1 Reverberatory Smelting Furnace Exemption	1-1
	1.1.2 Control of Reverberatory Furnace Particulate Matter Emissions	1-2
	1.1.3 Expansion	1-2
	1.1.4 Fugitive Emissions	1-3
	1.2 IMPACTS	1-3
2.	INTRODUCTION	2-1
	2.1 BACKGROUND AND AUTHORITY FOR STANDARDS	2-1
	2.2 SELECTION OF CATEGORIES OF STATIONARY SOURCES	2-5
	2.3 PROCEDURE FOR DEVELOPMENT OF STANDARDS OF PERFORMANCE	2-7
	2.4 CONSIDERATION OF COSTS	2-9
	2.5 CONSIDERATION OF ENVIRONMENTAL IMPACTS	2-10
	2.6 IMPACT ON EXISTING SOURCES	2-11
	2.7 REVISION OF STANDARDS OF PERFORMANCE	2-12
3.	THE PRIMARY COPPER SMELTING INDUSTRY: PROCESSES AND POLLUTANT EMISSIONS	3-1
	3.1 GENERAL	3-1
	3.2 PROCESS DESCRIPTION	3-3
	3.2.1 Roasting and Drying	3-4
	3.2.2 Smelting	3-11
	3.2.3 Converting	3-28
	3.2.4 Fire Refining	3-37
	3.2.5 Continuous Smelting Systems	3-39
	3.3 EMISSIONS FROM PRIMARY COPPER SMELTERS	3-44
	3.3.1 General	3-44
	3.3.2 Process Emissions	3-44
	3.3.3 Fugitive Emissions	3-46
	3.3.4 Summary of Fugitive Emissions Data	3-57
	3.4 EXPANSION OPTIONS FOR EXISTING FACILITIES	3-62
	3.4.1 Multihearth Roasters	3-62
	3.4.2 Fluid-Bed Roasters	3-64
	3.4.3 Reverberatory Furnaces	3-64
	3.4.4 Electric Furnaces	3-79
	3.4.5 Outokumpu Flash Furnaces	3-81
	3.4.6 Noranda Reactors	3-81
	3.4.7 Converters	3-82
	3.5 SUITABILITY OF ALTERNATIVE TECHNOLOGIES FOR PROCESSING HIGH-IMPURITY FEEDS	3-83

TABLE OF CONTENTS (con.)

		Page
3.5.1	Background	3-83
3.5.2	Impurity Behavior During the Smelting Process	3-85
3.5.3	High-Impurity Feed Processing Experience with Outokumpu Flash Furnaces	3-100
3.5.4	High-Impurity Feed Processing Experience with Inco Flash Furnaces	3-103
3.5.5	High-Impurity Feed Processing Experience with the Mitsubishi Process	3-104
3.5.6	High-Impurity Feed Processing Experience with Noranda Reactors	3-104
3.5.7	Conclusions	3-107
3.6	BASELINE EMISSIONS	3-111
3.6.1	Process Sources	3-111
3.6.2	Fugitive Sources	3-117
3.7	REFERENCES	3-118
4.	EMISSION CONTROL TECHNIQUES	4-1
4.1	GENERAL	4-1
4.2	SULFURIC ACID PLANTS	4-3
4.2.1	Summary	4-3
4.2.2	General Discussion	4-6
4.2.3	Design and Operating Considerations	4-8
4.2.4	Acid Plant Performance Characteristics	4-13
4.3	SCRUBBING SYSTEMS	4-20
4.3.1	Background	4-20
4.3.2	Calcium-Based Scrubbing Systems	4-22
4.3.3	Ammonia-Based Scrubbing Systems	4-44
4.3.4	Magnesium-Based Scrubbing Systems	4-58
4.3.5	Citrate Scrubbing Processes	4-68
4.3.6	Conclusions Regarding Flue Gas Desulfurization Systems	4-84
4.4	INCREASING THE SO_2 STRENGTH OF REVERBERATORY FURNACE OFFGASES	4-90
4.4.1	Elimination of Converter Slag Return	4-91
4.4.2	Minimizing Infiltration	4-92
4.4.3	Preheating Combustion Air	4-93
4.4.4	Operation at Lower Air-to-Fuel Ratio	4-94
4.4.5	Predrying Wet Charge	4-95
4.4.6	Oxygen Enhancement Techniques	4-95
4.4.7	Summary of Operating Modifications Useful for Increasing Offgas SO_2 Concentrations	4-117
4.5	GAS BLENDING	4-120
4.5.1	Converter Scheduling as a Means of Facilitating Gas Blending	4-120
4.5.2	Weak-Stream Blending as Applied to a New Smelter that Processes High-Impurity Ore Concentrates	4-120

TABLE OF CONTENTS (con.)

Page

4.5.3 Partial Weak-Stream Blending as Applied to Existing Smelters 4-121
4.6 PARTICULATE MATTER CONTROL FOR REVERBERATORY FURNACES 4-123
4.6.1 Important Factors Governing the Specification of a Particulate Control Device for Reverberatory Furnace Offgases 4-123
4.6.2 Venturi Scrubbers 4-128
4.6.3 Fabric Filters. 4-130
4.6.4 Electrostatic Precipitators 4-136
4.6.5 Conclusions Regarding Particulate Removal From Reberberatory Furnace Offgases 4-143
4.7 CONTROL OF FUGITIVE EMISSIONS FROM PRIMARY COPPER SMELTERS. 4-145
4.7.1 General 4-145
4.7.2 Local Ventilation 4-146
4.7.3 General Ventilation 4-149
4.7.4 Control of Fugitive Emissions From Roasting Operations. 4-150
4.7.5 Control of Fugitive Emissions From Smelting Furnace Operations. 4-153
4.7.6 Capture of Fugitive Emissions From Converter Operations. 4-161
4.7.7 Summary of Visible Emissions Data for Fugitive Emissions Sources. 4-181
4.7.8 Removal of Particulate Matter From Fugitive Gases 4-193
4.8 REFERENCES. 4-197

5. MODIFICATIONS AND RECONSTRUCTION 5-1
5.1 SUMMARY OF 40 CFR 60 PROVISIONS FOR MODIFICATION AND RECONSTRUCTION. 5-1
5.1.1 Modification. 5-1
5.1.2 Reconstruction. 5-2
5.2 APPLICABILITY TO PRIMARY COPPER SMELTERS. 5-3
5.2.1 General 5-3
5.2.2 Modifications 5-3
5.3 REFERENCES. 5-9

6. MODEL PLANTS AND ALTERNATE CONTROL TECHNOLOGIES. 6-1
6.1 INTRODUCTION. 6-1
6.2 REVERBERATORY FURNACE EXEMPTION 6-2
6.3 FUGITIVE EMISSION CONTROL 6-17
6.4 EXPANSION OPTIONS AND ALTERNATIVE CONTROL TECHNOLOGIES. . . . 6-22
6.5 REFERENCES. 6-36

TABLE OF CONTENTS (con.)

Page

7. ENVIRONMENTAL IMPACT 7-1
7.1 GENERAL 7-1
7.1.1 New Greenfield High-Impurity Smelters--Process Emissions 7-1
7.1.2 New Greenfield High-Impurity Smelters--Fugitive Emissions 7-3
7.2 AIR POLLUTION IMPACT. 7-3
7.2.1 SO_2 Controls for Reverberatory Smelting Furnaces. . . 7-3
7.2.2 Fugitive Particulate Emissions. 7-7
7.2.3 Expansion Scenarios 7-7
7.3 WATER POLLUTION IMPACT. 7-9
7.3.1 Gas Cleaning and Conditioning Systems 7-11
7.3.2 FGD Absorbent Purges. 7-11
7.4 SOLID WASTE IMPACT. 7-16
7.4.1 Calcium Based FGD's 7-17
7.4.2 Gas Cleaning Purges 7-17
7.4.3 Particulate Control on Reverberatory Smelting Furnaces. 7-18
7.5 ENERGY IMPACT 7-20
7.5.1 New Greenfield Smelters--Process Emissions. 7-20
7.5.2 New Greenfield Smelters--Fugitive Emissions 7-20
7.5.3 Expansion Scenarios 7-20

8. COSTS. 8-1
8.1 INTRODUCTION. 8-1
8.2 CONTROL OF WEAK SO_2 STREAMS FROM NEW REVERBERATORY FURNACES. 8-3
8.2.1 Capital Costs 8-5
8.2.2 Annualized Costs. 8-17
8.3 COSTS FOR FUGITIVE EMISSION CONTROL 8-29
8.3.1 Capital Costs 8-29
8.3.2 Annualized Costs. 8-33
8.4 COST OF CONTROLLING PROCESS PARTICULATE EMISSIONS FROM REVERBERATORY FURNACES IF THE REVERBERATORY EXEMPTION IS RETAINED 8-35
8.4.1 Capital Costs 8-35
8.4.2 Annualized Costs. 8-36
8.5 PROCESS COSTS 8-38
8.5.1 Capital Costs 8-38
8.5.2 Annualized Costs. 8-38
8.6 EXPANSION SCENARIOS 8-38
8.6.1 Incremental Capital and Annualized Process Costs for Expansion Scenarios 8-40
8.6.2 Incremental Capital and Annualized Costs for Control 8-46
8.6.3 Summary of Expansion Scenario Incremental Costs . . . 8-50

TABLE OF CONTENTS (con.)

Page

8.7 COST-EFFECTIVENESS 8-50
8.8 REFERENCES 8-59

9. ECONOMIC IMPACT 9-1
9.1 INDUSTRY ECONOMIC PROFILE 9-1
9.1.1 Introduction 9-1
9.1.2 The Copper Smelters--Ownership, Location, Concentration 9-2
9.1.3 The Copper Refiners 9-7
9.1.4 Domestic Supply 9-9
9.1.5 Flow of Copper from Mines to U.S. Smelters 9-11
9.1.6 Copper Production Costs 9-17
9.1.7 U.S. Copper Resources 9-21
9.1.8 Smelter Capacity Growth 9-24
9.1.9 Trends in U.S. Productivity 9-26
9.1.10 U.S. Total Consumption of Copper 9-29
9.1.11 Demand by End Use 9-29
9.1.12 Copper Prices 9-33
9.1.13 Substitutes 9-44
9.1.14 World Production and Consumption of Copper 9-45
9.2 ECONOMIC IMPACT ASSESSMENT 9-48
9.2.1 Introduction 9-48
9.2.2 Methodology of Impact Analysis 9-49
9.2.3 Price Elasticity of Supply 9-53
9.2.4 The Price Elasticity of Demand 9-55
9.2.5 Analysis 9-57
9.2.6 Findings 9-71
9.3 SOCIOECONOMIC IMPACT ASSESSMENT 9-76
9.3.1 Executive Order 12291 9-76
9.3.2 Regulatory Flexibility 9-79
9.4 REFERENCES 9-79

APPENDIX A EVOLUTION OF THE BACKGROUND INFORMATION DOCUMENT A-1

APPENDIX B INDEX TO ENVIRONMENTAL IMPACT CONSIDERATIONS B-1

APPENDIX C EMISSION SOURCE TEST DATA C-1

APPENDIX D (Not Used)

APPENDIX E USE OF COAL IN THE OUTOKUMPU FLASH FURNACE AT THE TOYO SMELTER E-1

APPENDIX F COST ANALYSIS TO ESTIMATE THE INCREMENTAL INCREASE IN CAPITAL COST INCURRED BY INCREASING SULFURIC ACID PLANT GAS-TO-GAS HEAT EXCHANGE CAPACITY F-1

TABLE OF CONTENTS (con.)

		Page
APPENDIX G	ANALYSIS OF CONTINUOUS SO_2 MONITOR DATA AND DETERMINATION OF AN UPPER LIMIT FOR THE INCREASE IN SO_2 EMISSIONS DUE TO SULFURIC ACID PLANT CATALYST DETERIORATION	G-1
APPENDIX H	SULFUR DIOXIDE EMISSION TEST RESULTS FOR SINGLE-STAGE ABSORPTION SULFURIC ACID PLANTS PROCESSING METALLURGICAL OFFGAS STREAMS FROM PRIMARY COPPER SMELTERS	H-1
APPENDIX I	ANALYSIS OF DUAL-ABSORPTION SULFURIC ACID PLANT CONTINUOUS SO_2 MONITORING DATA	I-1
APPENDIX J	EXAMPLE CALCULATIONS MODEL PLANT OPERATING PARAMETERS	J-1
APPENDIX K	MATHEMATICAL MODEL FOR ESTIMATING POSTEXPANSION REVERBERATORY GAS FLOW AND SO_2 CONCENTRATION FOR OXYGEN ENRICHMENT AND OXY-FUEL EXPANSION OPTIONS	K-1
APPENDIX L	METHODOLOGY FOR ESTIMATING SOLID AND LIQUID WASTE DISPOSAL REQUIREMENTS	L-1
APPENDIX M	DETAILED COSTS FOR GREENFIELD SMELTERS	M-1
APPENDIX N	FUGITIVE EMISSION CONTROL COSTS	N-1
APPENDIX O	DETAILED COSTS FOR EXPANSION SCENARIOS	O-1
APPENDIX P	METHODOLOGY UTILIZED TO DETERMINE THE COSTS ASSOCIATED WITH SULFURIC ACID PLANT PREHEATER OPERATION	P-1

FIGURES

Number		Page
3-1	The conventional copper smelting process	3-5
3-2	Types of roasters	3-8
3-3	Reverberatory smelting furnace	3-14
3-4	Electric smelting furnace	3-18
3-5	Inco flash smelting furnace	3-22
3-6	Outokumpu flash smelting furnace	3-26
3-7	Peirce-Smith Converter	3-30
3-8	Copper converter operation	3-31
3-9	Hoboken converter	3-36
3-10	Noranda continuous smelting	3-41
3-11	Mitsubishi continuous smelting	3-43
3-12	Fugitive emissions sources for primary copper smelters	3-48
3-13	Methods of oxygen addition	3-69
3-14	Converter elimination of arsenic as a function of matte grade	3-98
3-15	Converter elimination of antimony as a function of matte grade	3-98
3-16	Converter elimination of bismuth as a function of matte grade	3-99
4-1	Contact sulfuric acid processes	4-7
4-2	Calcium-based scrubbing processes	4-24
4-3	Effect of pH of calcium sulfite-bisulfite solution on SO_2 equilibrium vapor pressure	4-29
4-4	Flow diagram of the lime/gypsum plant at the Onahama smelter	4-38
4-5	Ammonia scrubbing process with sulfuric acid acidulation	4-48
4-6	Ammonia scrubbing process with ammonium bisulfite acidulation	4-50
4-7	Magnesium oxide (MAGOX) scrubbing process	4-60
4-8	Bureau of Mines citrate scrubbing process	4-71
4-9	Flakt-Boliden citrate scrubbing process	4-73
4-10	Typical absorber configuration	4-88
4-11	Methods of oxygen addition	4-97
4-12	Conventional copper reverberatory smelting furnace that has been converted to an oxygen sprinkle smelting furnace	4-100
4-13	Oxy-fuel burner locations in Reverberatory Furnace No. 3 at the Caletones smelter	4-102
4-14	Plan and elevation of Reverberatory Furnace No. 3	4-103

FIGURES (con.)

Number		Page
4-15	Reverberatory furnace temperatures in the vicinity of the furnace roofs with and without oxygen-undershooting at Inco smelter	4-115
4-16	Typical collection efficiency curves for several types of particulate removal devices	4-124
4-17	Venturi scrubber	4-129
4-18	Typical relationship between fractional collection efficiency and particle size for venturi scrubbers	4-131
4-19	Baghouse with mechanical shaking	4-133
4-20	Baghouse with reverse flow cleaning	4-134
4-21	Baghouse with cleaning by jet pulse	4-134
4-22	Electrostatic precipitator	4-139
4-23	Illustration of null point formation	4-148
4-24	Spring-loaded car top and ventilation hood, ASARCO-Hayden	4-152
4-25	Typical hooding for a matte tapping port	4-155
4-26	Schematic of a typical fugitive emissions control system for matte tapping operations	4-156
4-27	Typical sectional launder covers	4-157
4-28	Launder hoods utilized at the Phelps Dodge-Morenci Smelter for the capture of fugitive emissions generated during matte tapping operations	4-158
4-29	Schematic of the matte tapping and ladle hoods at the ASARCO-Tacoma Smelter	4-160
4-30	Schematic of the slag skimming (plan view) fugitive emissions control system at the ASARCO-Tacoma Smelter	4-162
4-31	Controlled airflow from a heated source	4-164
4-32	Uncontrolled airflow from a heated source	4-164
4-33	Inlet-outlet openings in converter building at ASARCO-El Paso	4-167
4-34	A typical fixed secondary converter hood	4-171
4-35	Retractable-type secondary hood as employed at ASARCO-Hayden	4-172
4-36	Entrained flow diagram	4-175
4-37	Converter air curtain/secondary hooding system as employed at the Onahama and Naoshima smelters	4-176
4-38	Schematic diagram of the converter housing/air curtain system at the Tamano smelter	4-178
6-1	Model plant for new "greenfield" smelter processing high-impurity materials	6-1
6-2	Model smelter converter operating schedule	6-8
6-3	Model Plant I for expansion of existing smelters	6-28
6-4	Model Plant II for expansion of existing smelters	6-29
6-5	Model Plant III for expansion of existing smelters	6-30
6-6	Model Plant IV for expansion of existing smelters	6-31
6-7	Model Plan V for expansion of existing smelters	6-32

FIGURES (con.)

Number		Page
8-1	Capital cost of a DC/DA sulfuric acid plant	8-6
8-2	Capital cost of an MgO FGD system	8-9
8-3	Capital cost of an ammonia FGD system	8-12
8-4	Capital cost of a limestone FGD system	8-14
8-5	Capital cost of an SC/SA sulfuric acid plant	8-47
9-1	Principal mining States and copper smelting and refining plants, 1978	9-3
9-2	U.S. sources and uses of copper	9-10
9-3	Comparison of copper price index and mine and mill capital cost index	9-19
9-4	U.S. copper smelter production	9-25
9-5	Quarterly price movements for copper wirebars (1973 to 1981)	9-36
9-6	U.S. copper price	9-37
9-7	Annual recoverable copper available from domestic deposits over a copper price range of $1.10 to $1.30/kg	9-41
9-8	Costs for smelting and refining in Japan vs. costs at new smelters in the United States	9-69
9-9	Costs for smelting and refining in Japan vs. costs at expanding smelters in the United States	9-70

TABLES

Number		Page
1-1	Expansion Scenarios Selected for Economic Analysis. . . .	1-4
1-2	Impacts of SO_2 Regulatory Alternatives of a Typical New Greenfield Smelter (Multihearth Roaster, Reverberatory Smelting Furnace, Converter) Processing High-Impurity Materials (All Impacts are Long Term Unless Otherwise Noted)	1-5
1-3	Impacts of Particulate Matter Regulatory Alternatives of a Typical New Greenfield Smelter (Multihearth Roaster, Reverberatory Smelting Furnace, Converter) Processing High-Impurity Materials (All Impacts are Long Term Unless Otherwise Noted). . . .	1-6
3-1	Domestic Primary Copper Smelters.	3-2
3-2	Major Copper-Bearing Minerals	3-2
3-3	Emissions Factors for Uncontrolled Major Process Sources	3-45
3-4	Potential Sources of Fugitive Emissions	3-47
3-5	Summary of Fugitive SO_2 Emissions Factors for Primary Copper Smelting Operations.	3-58
3-6	Summary of Fugitive Particulate Emissions Factors for Primary Copper Smelting Operations.	3-59
3-7	Maximum Acceptable Impurity Levels in Anode Copper, and Corresponding Levels in Blister Copper Produced at the ASARCO-Tacoma Smelter	3-86
3-8	Assays of Various High Impurity Materials Processed at ASARCO-Tacoma	3-87
3-9	Distribution of Impurity Elements in Conventional Smelting When Processing High-Impurity Feeds.	3-90
3-10	Distribution of Impurity Elements in the Noranda Process (Matte Production Mode)	3-95
3-11	Distribution of Impurity Elements in the Noranda Process (Blister Copper Production Mode).	3-96
3-12	Impurity Assays of Feed Materials Processed in the Outokumpu Flash Furnace at the Kosaka Smelter	3-101
3-13	Maximum Impurity Levels Recommended for the Outokumpu Flash Furnace	3-102
3-14	Range of Impurity Concentrations Tested in the Inco Miniplant Flash Furnace	3-105
3-15	Maximum Impurity Levels Processed in the Mitsubishi Process	3-106
3-16	Maximum Impurity Levels Recommended for the Noranda Process (Matte Production Mode)	3-108

TABLES (con.)

Number		Page
3-17	Summary of Experience Processing High-Impurity Feeds in Alternative Smelting Technologies.	3-110
3-18	Sulfur/Sulfur Dioxide Emission Limitations by State . . .	3-113
3-19	Particulate Emission Limitations by State	3-115
4-1	Estimated Maximum Impurity Limits for Metallurgical Offgases Used to Manufacture Sulfuric Acid.	4-15
4-2	Composition of Scale From the Onahama Lime-Gypsum Process	4-31
4-3	Major Domestic Utility-Related FGD Installations That Use the Limestone-Scrubbing Process	4-33
4-4	Lime/Limestone FGD Systems That Have Achieved SO_2 Removal Efficiences of 90 Percent or Greater on Offgases Generated by Coal-Fired Steam Generators	4-36
4-5	Summary of Emission Test Data for the Duval Sierrita Lime Scrubbing System, 1977-1980.	4-37
4-6	Performance Data on the Cominco-Type Ammonia-Based Scrubbing Units at Trail, British Columbia.	4-56
4-7	Flue Gas Desulfurization Processes Assessed for Application to Reverberatory Furnace Offgases	4-85
4-8	Efficiency and Reliability Data for the FGD Processes Being Considered in the NSPS Revision for Primary Copper Smelters	4-86
4-9	General Specifications of the Type of Oxy-Fuel Burner Employed at the Caletones Smelter	4-104
4-10	General Specifications of the Type of Oxy-Fuel Burner Employed at the Onahama Smelter	4-106
4-11	Typical Reverberatory Furnace Operating Data Before and After the Use of Oxy-Fuel Burners at the Onahama Smelter	4-107
4-12	Summary of Experience Involving the Use of Oxygen in Reverberatory Smelting Furnaces.	4-118
4-13	Typical Fractional Collection Efficiencies of Particulate Control Equipment	4-125
4-14	Summary of Particulate Test Data for the Spray Chamber/Baghouse at the Anaconda Smelter.	4-137
4-15	Summary of In-Stack/Out-of-Stack Particulate Matter Test Results at Reverberatory Furnace ESP Outlets	4-142
4-16	Summary of Particulate Test Data for the Spray Chamber/Roaster-Reverberatory ESP at the ASARCO-El Paso Smelter	4-144
4-17	Function of Air Curtain and Secondary Hood System During Various Modes of Converter Operation at Tamano Smelter	4-179
4-18	Summary of Design Data for the ASARCO-Tacoma Converter Secondary Hooding/Air Curtain System.	4-182

TABLES (con.)

Number		Page
4-19	Summary of Visible Emission Observation Data for Capture Systems on Fugitive Emission Sources at ASARCO-Tacoma	4-184
4-20	Visible Emission Observation Data for Reverberatory Furnace Matte Tapping Operations at the Phelps Dodge-Morenci Smelter	4-186
4-21	Visible Emission Data for Reverberatory Furnace Matte Tapping Operations at the Phelps Dodge-Morenci Smelter	4-187
4-22	Visible Emission Observation Data for Reverberatory Furnace Slag Skimming Operations at the Phelps Dodge-Morenci Smelter	4-188
4-23	Visible Emission Observation Data for Converter Secondary Hood System During Matte Charging at the Tamano Smelter	4-191
4-24	Visible Emission Observation Data for Blister Discharge at the Tamano Smelter	4-194
4-25	Summary of Emissions Testing Performed on the Converter Building Evacuation Baghouse at ASARCO-El Paso	4-195
4-26	Summary of Emissions Testing Performed on the Calcine Discharge Baghouse at Phelps Dodge-Douglas	4-196
6-1	Model Plant Charge Composition and Sulfur Elimination for Greenfield High-Impurity Smelter	6-5
6-2	Model Plant--Greenfield High-Impurity Smelter Representative Converter Offgas Stream Profile	6-10
6-3	Model Plant, New Greenfield High-Impurity Smelter Control Alternatives	6-12
6-4	Parameters for Particulate Control Alternatives--Primary Offgases from Dirty Reverberatory Furnaces	6-18
6-5	Summary of Fugitive Particulate Emissions Capture and Control Systems	6-20
6-6	Smelting Configuration/Expansion Scenarios	6-24
6-7	Model Plant Configurations and Existing U.S. Smelters	6-26
6-8	Model Plant Expansion Scenarios: Exit Gases, Composition, and Flow Rate	6-33
6-9	Model Plants for Expansion Options: Representative Feeds, Matte Grades, and Sulfur Elimination Rates	6-35
7-1	Evaluated Control Options for Control of Process SO_2 Emissions at a Greenfield Copper Smelter (Multihearth Roaster-Reverberatory Smelting Furance-Converter) Processing High-Impurity Materials	7-2

TABLES (con.)

Number		Page
7-2	Evaluated Alternatives for Control of Fugitive Particulate Emissions at a Greenfield Copper Smelter Processing High-Impurity Materials (Multihearth Roaster-Reverberatory Smelting Furnace-Converter)	7-4
7-3	Evaluated Alternatives for Control of Fugitive Particulate Emissions at a Greenfield Copper Smelter (Flash Furnace-Converter)	7-5
7-4	Air Pollution Emission Impact of SO_2 Control Alternatives for a New Greenfield Smelter, Multihearth Roaster-Reverberatory Furnace-Converter	7-6
7-5	Air Pollution Fugitive Particulate Emission Impact for Each Source and Control Alternatives--New Greenfield Smelters	7-8
7-6	Air Pollution Fugitive Particulate Emission Impact for Expansion at Existing Smelters.	7-10
7-7	Estimated Production Rate of Solid and Liquid Effluents Requiring Disposal From Gas Cleaning and Conditioning Equipment, Greenfield Smelters	7-12
7-8	Estimated Incremental Increase in Effluents Requiring Disposal From Gas Cleaning and Conditioning Equipment, Expansion Options.	7-13
7-9	Estimated Production Rate of Solid and Liquid Effluents Requiring Disposal from FGD Systems Associated With Greenfield Smelter Models	7-14
7-10	Estimated Production Rate of Solid and Liquid Effluents Requiring Disposal from FGD Systems Associated With Expansion Options	7-15
7-11	Estimate of Emission Reduction Due to Particulate Control of Reverberatory Smelting Furnace Primary Offgases--High-Impurity Greenfield Smelter.	7-19
7-12	Energy Impact--Process SO_2 Control Alternatives for New Greenfield Smelter, Multihearth Roaster-Reverberatory Furnace-Converter.	7-21
7-13	Incremental Energy Impact--Fugitive Emission Control Alternatives for New Greenfield Smelters.	7-22
7-14	Energy Impacts--Expansion Scenarios for Existing Primary Copper Smelters	7-23
8-1	Control Alternatives.	8-2
8-2	Input Data to Cost Estimation, New High-Impurity Smelter	8-4
8-3	Labor and Utility Unit Costs.	8-18
8-4	FGD Raw Material and Utility Usage Rate	8-22
8-5	Evaluated Alternatives for Control of Fugitive Particulate Emissions from a New Copper Smelter (Multihearth Roaster, Reverberatory Furnace, Converter or Flash Furnace-Converter) Processing High-Impurity Materials	8-30

TABLES (con.)

Number		Page
8-6	Model Plant Expansion Scenarios	8-39
8-7	Input Data to Cost Estimations, Expansions Options	8-41
8-8	Summary of Incremental Costs Incurred Due to Acid Plant Preheater Operation	8-51
8-9	Expansion Costs (Includes Cost of Controlling SO_2 Emissions from New Roasters and Converters as Required by Existing NSPS)	8-52
8-10	Cost-Effectiveness: Control of Reverberatory Furnace SO_2 Emissions in a New Copper Smelter (Multihearth Roasters, Reverberatory Furnace, Converter) Processing High-Impurity Materials	8-53
8-11	Costs for Control of Fugitive Particulate Matter Emissions by Source, New Greenfield Smelter	8-54
8-12	Cost-Effectiveness of Expansion Scenairos	8-55
8-13	Cost-Effectiveness, Fugitive Particulate Matter Control, Expansion Scenarios	8-56
8-14	Incremental Cost Data, Least Cost Expansion Scenarios	8-57
8-15	Incremental Cost Data, Fugitive Emission Control Least Cost Expansion Scenarios	8-58
9-1	Smelter Ownership, Production and Source Material Arrangements	9-5
9-2	U.S. Refining Facilities for Primary Copper	9-8
9-3	Flow of Copper From Mines to U.S. Smelters, Mine Output	9-12
9-4	Flow of Copper From Mines to U.S. Smelters, Smelter Sources	9-14
9-5	Smelting Cost Estimates	9-20
9-6	U.S. Copper Production by Mine (1977), Cents per Kilogram and Production Capacity	9-22
9-7	Copper Resources of U.S. Companies	9-23
9-8	Productivity in the Copper Industry	9-27
9-9	Output and Productivity Indices	9-28
9-10	U.S. Copper Consumption	9-30
9-11	U.S. Copper Demand by Market End Uses	9-32
9-12	U.S. Shipments of Copper-Base Mill and Foundry Products--Gross Weight	9-34
9-13	U.S. Copper Mine Capacity: Current and Potential	9-42
9-14	United States and World Comparative Trends in Refined Copper Consumption, 1963-1979	9-46
9-15	United States and World Comparative Trends in Copper Production: 1963-1979	9-47
9-16	Price Elasticity of Supply Estimates	9-54
9-17	Price and Income Elasticities of Demand Estimates	9-56
9-18	Cost Data for New High Impurity Greenfield Smelters	9-58
9-19	Cost Data for New Greenfield Smelter Processing Clean Concentrates Using a Flash Furnace	9-59
9-20	Smelter Cost Data for Expansion Scenarios	9-61
9-21	Maximum Percentage Price Increase	9-72

TABLES (con.)

Number		Page
9-22	Maximum Percent Profit Reduction.	9-74
9-23	Summary of Selected Cases	9-75
9-24	Number of Employees at Companies That Own Primary Copper Smelters	9-78

1. SUMMARY

1.1 REGULATORY ALTERNATIVES

In response to petitions filed by the National Resources Defense Council (NRDC) and the American Smelting and Refining Company (ASARCO) after the existing standard for primary copper smelters was promulgated January 15, 1975 (41 FR 2338), the U.S. Environmental Protection Agency (EPA) entered into negotiations with NRDC and ASARCO that led to a court-approved settlement of the petitions. Under the terms of the settlement, EPA would review the standard and make whatever changes were considered appropriate. This review coincided with the periodic review of established standards required by the 1977 Clean Air Act Amendments.

The review focused on four areas: (1) reexamination of the current exemption for reverberatory furnaces processing high-impurity materials, (2) reassessment of the feasibility of controlling particulate emissions from reverberatory furnaces processing high-impurity materials, (3) reevaluation of the impact of the existing standard on the ability of existing smelters to expand production, and (4) assessment of the technical and economic feasibility of controlling fugitive emissions at primary copper smelters.

1.1.1 Reverberatory Smelting Furnace Exemption

The following seven alternatives were considered for controlling SO_2 emissions from reverberatory smelting furnaces if the exemptions while processing high-impurity materials were withdrawn:

I-A Partial blending of 45 percent of the reverberatory smelting furnace stream with multihearth roaster and converter strong streams followed by treatment in a double contact/double absorption (DC/DA) sulfuric acid plant.

I-B Treatment of the reverberatory furnace stream in a magnesium oxide flue gas desulfurization (FGD) system, strong FGD SO_2 stream to a DC/DA sulfuric acid plant.

I-C Same as I-B except NH_3 FGD system.

I-D Treatment of the reverberatory smelting furnace stream in a limestone FGD system.

I-E Blending 100 percent of the reverberatory smelting furnace stream with multihearth roaster and converter streams and treatment in a DC/DA sulfuric acid plant.

I-F Blending of the oxygen-enriched reverberatory smelting furnace stream with multihearth roaster and converter streams and treatment in a DC/DA sulfuric acid plant.

I-G Blending of the oxy-fuel reverberatory smelting furnace stream with multihearth roaster and converter streams and treatment in a DC/DA sulfuric acid plant.

Control Alternative I-G, determined to be both the most cost-effective and the most efficient, was subjected to the economic analysis.

1.1.2 Control of Reverberatory Furnace Particulate Matter Emissions

Two alternatives were considered for controlling particulate matter emissions from reverberatory smelting furnaces if the exemption while processing high-impurity materials is retained: (1) gas cooling followed by fabric filtration and (2) gas cooling followed by treatment by an electrostatic precipitator (ESP).

1.1.3 Expansion

Twenty-four expansion scenarios were analyzed to determine the impact of the existing standard on the ability of existing smelters to expand production capacity. The analysis focused on the reverberatory smelting furnace because it is the rate-determining limitation. Each scenario consists of a smelter configuration, an expansion option, and a control alternative. The smelter configurations are representative of the existing domestic smelter. Expansion options include oxygen enrichment of reverberatory combustion air, retrofitting the reverberatory furnace with oxy-fuel burners, conversion from green to calcine charging, and replacement of the reverberatory smelting furnace with a flash smelting furnace. Control alternatives, designed to reduce

postexpansion reverberatory smelting furnace weak SO_2 stream emissions to preexpansion levels include partial blending with converter and/or roaster strong SO_2 streams followed by treatment in an acid plant, and treatment of a slipstream from the reverberatory smelting furnace in an FGD.

The scenarios shown in Table 1-1 were determined to be the most cost-effective and were included in the economic analysis.

1.1.4 Fugitive Emissions

Control alternatives for capturing fugitive particulate matter emissions from primary copper smelters were studied: larry car interlock ventilation systems for multihearth roasters; local hooding at slag skim and matte tap ports; ladle hoods and launder covers for smelting furnaces; and air curtain/secondary hood or building evacuation for converters. Particulate matter would be removed from captured streams by fabric filtration.

1.2 IMPACTS

In matrix form, Tables 1-2, 1-3, 1-4, and 1-5 show environmental, energy, and economic impacts of the control alternative described in Section 1.1, above, for the reverberatory smelting furnace exemption, for control of particulate matter, for expansion capability, and for control of fugitive emissions, respectively.

TABLE 1-1. EXPANSION SCENARIOS SELECTED FOR ECONOMIC ANALYSIS

Smelter configuration	Expansion option	Control alternative weak SO_2 streams	Capacity increase (%)
Low-impurity feed			
Multihearth roaster, reverberatory furnace, converter	Oxygen enrichment	Partial blending and acid plant	20
Multihearth roaster, reverberatory furnace, converter	Conversion to flash smelting	None[a]	50
Multihearth roaster, reverberatory furnace, converter	Conversion to flash smelting	None[a]	100
Reverberatory furnace, converter	Oxygen enrichment	Partial blending and acid plant	20
Reverberatory furnace, converter	Conversion to flash smelting	None[a]	50
Reverberatory furnace, converter	Conversion to flash smelting	None[a]	100
Fluid-bed roaster, reverberatory furnace, converter	Oxygen enrichment	Partial blending and acid plant	20
Fluid-bed roaster, reverberatory furnace, converter	Conversion to flash smelting	None[a]	60
Electric furnace, converter	Conversion to calcine charge	None[b]	40
Flash furnace, converter	Oxygen enrichment	None[a]	20
High-impurity feed			
Multihearth roaster, reverberatory furnace, converter	Oxygen enrichment	Partial blending and acid plant	20

[a]Post expansion smelting furnace offgases are strong streams.

[b]Post expansion smelting furnace SO_2 emissions are less than preexpansion.

TABLE 1-2. IMPACTS OF SO_2 REGULATORY ALTERNATIVES OF A TYPICAL NEW GREENFIELD SMELTER (MULTIHEARTH ROASTER, REVERBERATORY SMELTING FURNACE, CONVERTER) PROCESSING HIGH-IMPURITY MATERIALS (ALL IMPACTS ARE LONG TERM UNLESS OTHERWISE NOTED)[a]

Regulatory Alternative based on:	Air impact	Water impact	Solid waste impact	Energy impact	Economic impact
Control Alternative I-A	+2	-1	-1	-1	N.P.
Control Alternative I-B	+3	-2	-2	-1	N.P.
Control Alternative I-C	+3	-1	-1	-1	N.P.
Control Alternative I-D	+3	-2	-2	-1	N.P.
Control Alternative I-E	+3	-1	-1	-1	N.P.
Control Alternative I-F	+3	-1	-1	-1	N.P.
Control Alternative I-G	+3	-1	-1	+1	-1
No changes to standard	0	0	0	0	0

[a]If exemption of reverberatory smelting furnace while processing high-impurity materials is deleted.

Key:
+ Beneficial impact
- Adverse impact
0 No impact
1 Negligible impact
2 Small impact
3 Moderate impact
4 Large impact
N.P. Analysis not performed

TABLE 1-3. IMPACTS OF PARTICULATE MATTER REGULATORY ALTERNATIVES OF A TYPICAL NEW GREENFIELD SMELTER (MULTIHEARTH ROASTER, REVERBERATORY SMELTING FURNACE, CONVERTER) PROCESSING HIGH-IMPURITY MATERIALS (ALL IMPACTS ARE LONG TERM UNLESS OTHERWISE NOTED)[a]

Regulatory Alternative based on:	Air impact	Water impact	Solid waste impact	Energy impact	Economic impact
Gas cooling, fabric filtration	+2	-1	-1	-1	-1
Gas cooling, ESP	+2	-1	-1	-1	-1
No change to standard	0	0	0	0	0

[a]If exemption of reverberatory smelting furnace while processing high-impurity material is retained.

Key:
+ Beneficial impact
- Adverse impact
0 No impact
1 Negligible impact
2 Small impact

2. INTRODUCTION

2.1 BACKGROUND AND AUTHORITY FOR STANDARDS

Before standards of performance are proposed as a Federal regulation, air pollution control methods available to the affected industry and the associated costs of installing and maintaining the control equipment are examined in detail. Various levels of control, based on different technologies and degrees of efficiency, are expressed as regulatory alternatives. Each of these alternatives is studied by the U.S. Environmental Protection Agency (EPA) as a prospective basis for a standard. The alternatives are investigated in terms of their impacts on the economics and well-being of the industry, the impacts on the national economy, and impacts on the environment. This document summarizes the information obtained through these studies so interested persons will be able to see the information considered by EPA in the development of the proposed standards.

Standards of performance for new stationary sources are established under Section 111 of the Clean Air Act (42 USC 7411) as amended, herein referred to as the Act. Section 111 directs the Administrator to establish standards of performance for any category of new stationary source of air pollution that ". . . causes or contributes significantly to air pollution which may reasonably be anticipated to endanger public health or welfare."

The Act requires that standards of performance for stationary sources reflect ". . . the degree of emission reduction achievable through the application of the best system of continuous emission reduction which (taking into consideration the cost of achieving such emission reduction, and any nonair quality health and environmental impact and energy requirements) the Administrator determines has been

adequately demonstrated for that category of sources." The standards apply only to stationary sources, the construction or modification of which commences after regulations are proposed by publication in the Federal Register.

The 1977 amendments to the Act altered or added numerous provisions that apply to the process of establishing standards of performance.

- EPA is required to list the categories of major stationary sources that have not already been listed and regulated under standards of performance. Regulations must be promulgated for these new categories on the following schedule:

  a. 25 percent of the listed categories by August 7, 1980,

  b. 75 percent of the listed categories by August 7, 1981, and

  c. 100 percent of the listed categories by August 7, 1982.

  A governor of a State may apply to the Administrator to add a category not on the list or may apply to the Administrator to have a standard of performance revised.

- EPA is required to review the standards of performance every 4 years and, if appropriate, to revise them.

- EPA is authorized to promulgate a standard based on design, equipment, work practice, or operational procedures when a standard based on emission levels is not feasible.

- The term "standards of performance" is redefined, and a new term, "technological system of continuous emission reduction," is defined. The new definitions clarify that the control system must be continuous and may include a low- or nonpolluting process or operation.

- The time between the proposal and promulgation of a standard under Section 111 of the Act may be extended to 6 months.

Standards of performance, by themselves, do not guarantee protection of health or welfare because they are not designed to achieve any specific air quality levels. Rather, they are designed to reflect the degree of emission limitation achievable through application of the best adequately demonstrated technological system of continuous emission reduction, considering the cost of achieving such emission reduction,

any nonair-quality health and environmental impacts, and energy requirements.

Congress had several reasons for including these requirements. First, standards with a degree of uniformity are needed to prevent situations where some States may attract industries by relaxing standards relative to other States. Second, stringent standards enhance the potential for long-term growth. Third, stringent standards may help achieve long-term cost savings by eliminating the need for more expensive retrofitting when pollution ceilings may be reduced in the future. Fourth, certain types of standards for coalburning sources can adversely affect the coal market by driving up the price of low-sulfur coal or effectively excluding certain coals from the reserve base because their untreated pollution potentials are high. Congress does not intend for New Source Performance Standards to contribute to these problems. Fifth, the standard-setting process should create incentives for improved technology.

Promulgation of standards of performance does not prevent State or local agencies from adopting more stringent emission limitations for the same sources. States are free under Section 116 of the Act to establish even more stringent emission limits than those established under Section 111 or those necessary to attain or maintain the National Ambient Air Quality Standards (NAAQS) under Section 110. Thus, new sources may in some cases be subject to limitations more stringent than standards of performance under Section 111, and prospective owners and operators of new sources should be aware of this possibility in planning for such facilities.

A similar situation may arise when a major emitting facility is to be constructed in a geographic area that falls under the prevention of significant deterioration of air quality provisions of Part C of the Act. These provisions require, among other things, that major emitting facilities to be constructed in such areas are to be subject to best available control technology. The term best available control technology (BACT), as defined in the Act, means:

> . . . an emission limitation based on the maximum degree of reduction of each pollutant subject to regulation under this Act emitted from or which results from any major emitting facility, which the permitting authority, on a case-by-case basis, taking into account energy, environmental, and economic impacts and other costs, determines is achievable for such facility through application of production processes and available methods, systems, and techniques, including fuel cleaning or treatment or innovative fuel combustion techniques for control of each such pollutant. In no event shall application of "best available control technology" result in emissions of any pollutants which will exceed the emissions allowed by any applicable standard established pursuant to section 111 or 112 of this Act. (Section 169[3])

Where feasible, standards of performance are normally structured in terms of numerical emission limits. However, alternative approaches are sometimes necessary. In some cases physical measurement of emissions from a new source may be impractical or exorbitantly expensive. Section 111(h) provides that the Administrator may promulgate a design or equipment standard in cases where it is not feasible to prescribe or enforce a standard of performance. For example, hydrocarbon emissions from storage vessels for petroleum liquids are greatest during tank filling. The nature of the emissions--high concentrations for short periods during filling and low concentrations for longer periods during storage--and the configuration of storage tanks make direct emission measurement impractical. Therefore, a more practical approach to standards of performance for storage vessels has been equipment specification.

In addition, Section 111(j) authorizes the Administrator to grant waivers of compliance to permit a source to use innovative continuous emission control technology. To grant the waiver, the Administrator must find:

- A substantial likelihood that the technology will produce greater emission reductions than the standards require or an equivalent reduction at lower economic, energy, or environmental cost;
- The proposed system has not been adequately demonstrated;
- The technology will not cause or contribute to an unreasonable risk to the public health, welfare, or safety;

- The governor of the State where the source is located consents; and

- The waiver will not prevent the attainment or maintenance of any ambient standard. A waiver may have conditions attached to ensure that the source will not prevent attainment of any NAAQS. Any such condition will have the force of a performance standard. Finally, waivers have definite end dates and may be terminated earlier if the conditions are not met or if the system fails to perform as expected. In such a case, the source may be given up to 3 years to meet the standards with a mandatory progress schedule.

2.2 SELECTION OF CATEGORIES OF STATIONARY SOURCES

Section 111 of the Act directs the Administrator to list categories of stationary sources. The Administrator ". . . shall include a category of sources in such list if in his judgment it causes, or contributes significantly to, air pollution which may reasonably be anticipated to endanger public health or welfare." Proposal and promulgation of standards of performance are to follow.

Since passage of the Clean Air Amendments of 1970, considerable attention has been given to the development of a system for assigning priorities to various source categories. The approach specifies areas of interest by considering the broad strategy of the Agency for implementing the Clean Air Act. Often, these "areas" are actually pollutants emitted by stationary sources. Source categories that emit these pollutants are evaluated and ranked by a process involving such factors as:

- Level of emission control (if any) already required by State regulations,

- Estimated levels of control that might be required from standards of performance for the source category,

- Projections of growth and replacement of existing facilities for the source category, and

- Estimated incremental amount of air pollution that could be prevented in a preselected future year by standards of performance for the source category.

Sources for which new source performance standards were promulgated or

under development during 1977, or earlier, were selected on these criteria.

The Act amendments of August 1977 establish specific criteria to be used in determining priorities for all major source categories not yet listed by EPA. These are:

- The quantity of air pollutant emissions that each such category will emit, or will be designed to emit;
- The extent to which each such pollutant may reasonably be anticipated to endanger public health or welfare; and
- The mobility and competitive nature of each such category of sources and the consequent need for nationally applicable new source standards of performance.

The Administrator is to promulgate standards for these categories according to the schedule referred to earlier.

In some cases it may not be feasible to develop immediately a standard for a source category with a high priority. This problem might arise when a program of research is needed to develop control techniques or because techniques for sampling and measuring emissions may require refinement. In the development of standards, differences in the time required to complete the necessary investigation for different source categories must also be considered. For example, substantially more time may be necessary if numerous pollutants must be investigated from a single source category. Further, even late in the development process the schedule for completion of a standard may change. For example, inability to obtain emission data from well-controlled sources in time to pursue the development process in a systematic fashion may force a change in scheduling. Nevertheless, priority ranking is, and will continue to be, used to establish the order in which projects are initiated and resources assigned.

After the source category has been chosen, the types of facilities within the source category to which the standard will apply must be determined. A source category may have several facilities that cause air pollution, and emissions from some of these facilities may vary from insignificant to very expensive to control. Economic studies of

the source category and of applicable control technology may show that air pollution control is better served by applying standards to the more severe pollution sources. For this reason, and because there is no adequately demonstrated system for controlling emissions from certain facilities, standards often do not apply to all facilities at a source. For the same reasons, the standards may not apply to all air pollutants emitted. Thus, although a source category may be selected to be covered by a standard of performance, not all pollutants or facilities within that source category may be covered by the standards.

2.3 PROCEDURE FOR DEVELOPMENT OF STANDARDS OF PERFORMANCE

Standards of performance must:

- Realistically reflect best demonstrated control practice;
- Adequately consider the cost, the nonair-quality health and environmental impacts, and the energy requirements of such control;
- Be applicable to existing sources that are modified or reconstructed as well as new installations; and
- Meet these conditions for all variations of operating conditions considered anywhere in the country.

The objective of a program for developing standards is to identify the best technological system of continuous emission reduction that has been adequately demonstrated. The standard-setting process involves three principal phases of activity: information gathering, analysis of the information, and development of the standard of performance.

During the information-gathering phase, industries are queried through a telephone survey, letters of inquiry, and plant visits by EPA representatives. Information is also gathered from many other sources, and a literature search is conducted. From the knowledge acquired about the industry, EPA selects certain plants at which emission tests are conducted to provide reliable data that characterize the pollutant emissions from well-controlled existing facilities.

In the second phase of a project, the information about the industry and the pollutants emitted is used in analytical studies. Hypothetical "model plants" are defined to provide a common basis for analysis. The model plant definitions, national pollutant emission data, and existing State regulations governing emissions from the source category are then used in establishing "regulatory alternatives." These regulatory alternatives are essentially different levels of emission control.

EPA conducts studies to determine the impact of each regulatory alternative on the economics of the industry and on the national economy, on the environment, and on energy consumption. From several possibly applicable alternatives, EPA selects the single most plausible regulatory alternative as the basis for a standard of performance for the source category under study.

In the third phase of a project, the selected regulatory alternative is translated into a standard of performance, which, in turn, is written in the form of a Federal regulation. The Federal regulation, when applied to newly constructed plants, will limit emissions to the levels indicated in the selected regulatory alternative.

As early as is practical in each standard-setting project, EPA representatives discuss with members of the National Air Pollution Control Techniques Advisory Committee (NAPCTAC) the possibilities of a standard and the form it might take. Industry representatives and other interested parties also participate in these meetings.

The information acquired in the project is summarized in the review document. The review document, the standard, and a preamble explaining the standard are widely circulated to the industry being considered for control, environmental groups, other government agencies, and offices within EPA. Through this extensive review process, the points of view of expert reviewers are considered as changes are made to the documentation.

A "proposal package" is assembled and sent through the offices of EPA Assistant Administrators for concurrence before the proposed standards are officially endorsed by the EPA Administrator. After

they are approved by the Administrator, the preamble and the proposed regulation are published in the Federal Register.

As a part of the Federal Register announcement of the proposed standards, the public is invited to participate in the standard-setting process. EPA invites written comments on the proposal and also holds a public hearing to discuss the proposed standards with interested parties. All public comments are summarized and incorporated into a second volume of the review document. All information reviewed and generated in studies in support of the standard of performance is available to the public in a "docket" on file in Washington, DC.

Comments from the public are evaluated, and the standard of performance may be altered in response to the comments.

The significant comments and EPA's position on the issues raised are included in the "preamble" of a "promulgation package," which also contains the draft of the final regulation. The regulation is then subjected to another round of review and refinement until it is approved by the EPA Administrator. After the Administrator signs the regulation, it is published as a "final rule" in the Federal Register.

2.4 CONSIDERATION OF COSTS

Section 317 of the Act requires an economic impact assessment with respect to any standard of performance established under Section 111 of the Act. The assessment is required to contain an analysis of:

- Costs of compliance with the regulation, including the extent to which the cost of compliance varies, depending on the effective date of the regulation and the development of less expensive or more efficient methods of compliance;
- Potential inflationary or recessionary effects of the regulation;
- Effects the regulation might have on small business with respect to competition;
- Effects of the regulation on consumer costs; and
- Effects of the regulation on energy use.

Section 317 also requires that the economic impact assessment be as extensive as practicable.

The economic impact of a proposed standard upon an industry is usually addressed both in absolute terms and in terms of the control costs that would be incurred as a result of compliance with typical, existing State control regulations. An incremental approach is necessary because both new and existing plants would be required to comply with State regulations in the absence of a Federal standard of performance. This approach requires a detailed analysis of the economic impact from the cost differential that would exist between a proposed standard of performance and the typical State standard.

Air pollutant emissions may cause water pollution problems, and captured potential air pollutants may pose a solid waste disposal problem. The total environmental impact of an emission source must, therefore, be analyzed and the costs determined whenever possible.

A thorough study of the profitability and price-setting mechanisms of the industry is essential to the analysis so an accurate estimate of potential adverse economic impacts can be made for proposed standards. It is also essential to know the capital requirements for pollution control systems already placed on plants so additional capital requirements necessitated by these Federal standards can be placed in proper perspective. Finally, it is necessary to assess the availability of capital to provide the additional control equipment needed to meet the standards of performance.

2.5 CONSIDERATION OF ENVIRONMENTAL IMPACTS

Section 102(2)(C) of the National Environmental Policy Act (NEPA) of 1969 requires Federal agencies to prepare detailed environmental impact statements on proposals for legislation and other major Federal actions significantly affecting the quality of the human environment. The objective of NEPA is to build into the decisionmaking process of Federal agencies a careful consideration of all environmental aspects of proposed actions.

In a number of legal challenges to standards of performance for various industries, the United States Court of Appeals for the District of Columbia Circuit has held that environmental impact statements need not be prepared by the Agency for proposed actions under Section 111

of the Clean Air Act. Essentially, the Court of Appeals has determined that the best system of emission reduction requires the Administrator to take into account counterproductive environmental effects of a proposed standard, as well as economic costs to the industry. On this basis, therefore, the Court established a narrow exemption from NEPA for EPA determinations under Section 111.

In addition to these judicial determinations, the Energy Supply and Environmental Coordination Act (ESECA) of 1974 (PL-93-319) specifically exempted proposed actions under the Clean Air Act from NEPA requirements. According to Section 7(c)(1), "No action taken under the Clean Air Act shall be deemed a major Federal action significantly affecting the quality of the human environment within the meaning of the National Environmental Policy Act of 1969" (15 USC 793c[1]).

Nevertheless, the Agency has concluded that the preparation of environmental impact statements could have beneficial effects on certain regulatory actions. Consequently, although not legally required to do so by section 102 (2)(C) of NEPA, EPA has adopted a policy requiring that environmental impact statements be prepared for various regulatory actions, including standards of performance developed under Section 111 of the Act. This voluntary preparation of environmental impact statements, however, in no way legally subjects the Agency to NEPA requirements.

To implement this policy, a separate section in this document is devoted solely to an analysis of the potential environmental impacts associated with the proposed standards. Both adverse and beneficial impacts in such areas as air and water pollution, increased solid waste disposal, and increased energy consumption are discussed.

2.6 IMPACT ON EXISTING SOURCES

Section 111 of the Act defines a new source as ". . . any stationary source, the construction or modification of which is commenced . . ." after the proposed standards are published. An existing source is redefined as a new source if "modified" or reconstructed" as defined in amendments to the general provisions of Subpart A of 40 CFR Part 60, which were promulgated in the Federal Register on December 16, 1975 (40 FR 58416).

Promulgation of a standard of performance requires States to establish standards of performance for existing sources in the same industry under Section 111 (d) of the Act if the standard for new sources limits emissions of a designated pollutant (i.e., a pollutant for which air quality criteria have not been issued under Section 108 or which has not been listed as a hazardous pollutant under Section 112). If a State does not act, EPA must establish such standards. General provisions outlining procedures for control of existing sources under Section 111(d) were promulgated November 17, 1975, as Subpart B of 40 CFR Part 60 (40 FR 53340).

2.7 REVISION OF STANDARDS OF PERFORMANCE

Congress was aware that the level of air pollution control achievable by any industry may improve with technological advances. Accordingly, Section 111 of the Act provides that the Administrator ". . . shall, at least every 4 years, review and, if appropriate, revise . . ." the standards. Revisions are made to ensure that the standards continue to reflect the best systems that become available in the future. Such revisions will not be retroactive, but will apply to stationary sources constructed or modified after proposal of the revised standards.

3. THE PRIMARY COPPER SMELTING INDUSTRY: PROCESSES AND POLLUTANT EMISSIONS

3.1 GENERAL

The primary copper smelting industry extracts copper from sulfide copper ores by the pyrometallurgical process of smelting. A major commodity metal, the refined copper ultimately produced has many uses such as in electrical wire, electrical components, heat exchangers, pipes, coins, and as a component of various alloys such as bronze and brass.[1]

The domestic smelting industry is comprised of seven companies that operate 15 smelters in the United States. The majority of plants are located in the southwest near large deposits of copper ore. Arizona, which has extensive ore deposits, has the greatest number of smelters--a total of seven. Two smelters are located in New Mexico, and a single smelter is located in each of the following States: Nevada, Texas, Utah, Tennessee, Michigan, and Washington. Domestic smelters range in production capacity from 13,600 Mg/yr (15,000 tons/yr) for the Cities Service Company smelter in Copperhill, Tennessee, to 254,000 Mg/yr (280,000 tons/yr) for the Kennecott Corporation smelter in Garfield, Utah. The 15 smelters, their locations, and capacities are presented in Table 3-1.

Raw copper ore is a natural mixture of copper-bearing minerals and rock (gangue). The copper ores are distinguished generally as either sulfides, oxides, or native, depending upon the copper-bearing minerals they contain. Some 165 copper minerals are known, but only a few are commonly found in ore deposits.[2] Some of the more important sulfide and oxide minerals from which copper is extracted are listed with their chemical compositions in Table 3-2.

TABLE 3-1. DOMESTIC PRIMARY COPPER SMELTERS[a]

Company	Location	Annual capacity[b] Mg	Annual capacity[b] Tons	Reference
ASARCO, Incorporated	El Paso, Texas	91,000	100,000	4
	Hayden, Arizona	182,000	200,000	4
	Tacoma, Washington	91,000	100,000	4
Cities Service Company	Copperhill, Tennessee	13,600	15,000	5
Copper Range Company	White Pine, Michigan	52,000	57,000	6
Inspiration Consolidated Copper Company	Miami, Arizona	136,000	150,000	7
Kennecott Minerals Company (SOHIO)	Garfield, Utah	254,000	280,000	7
	Hayden, Arizona	71,000	78,000	8
	Hurley, New Mexico	73,000	80,000	7
	McGill, Nevada	45,000	50,000	7
Magma Copper Company	San Manuel, Arizona	181,000	200,000	7
Phelps Dodge Corporation	Ajo, Arizona	64,000	70,000	7
	Douglas, Arizona	115,000	127,000	7
	Hidalgo, New Mexico	163,000	179,000	9
	Morenci, Arizona	191,000	210,000	9

[a]Based on information in Reference 7 (1979 data), updated to 1982 where possible.
[b]Production of "blister" copper (99 percent Cu).

TABLE 3-2. MAJOR COPPER-BEARING MINERALS

Type	Mineral	Formula
Sulfide	Chalcopyrite	$CuFeS_2$
	Bornite	Cu_5FeS_4
	Chalcocite	Cu_2S
	Covellite	CuS
Oxide	Malachite	$CuCO_3 \cdot Cu(OH)_2$
	Azurite	$2CuCO_3 \cdot Cu(OH)_2$
	Chrysocolla	$CuSiO_3 \cdot 2H_2O$
	Cuprite	Cu_2O

The sulfide ores account for 85 to 95 percent of domestic copper production,[3] with the most common copper-bearing minerals contained in these ores being chalcopyrite, bornite, and chalcocite. The oxide minerals, which were formed from the weathering of the sulfides, are generally found in the upper portions of the sulfide deposits. Native copper, which consists of nearly pure metallic copper, occurs in small amounts in most major copper deposits. However, it is found in sufficient quantities to be of importance only in Michigan's upper peninsula.

Copper ores are mined from both underground and, more commonly, open pit mines. The average tenor (copper content) of domestic ores is low, less than 1 percent.[3] Materials comprising the majority of the ore include siliceous oxides, iron sulfides (pyrite FeS_2, pyrrhotite FeS), and various other impurity metals such as zinc, lead, arsenic, antimony, and bismuth, which are typically in sulfide form. In addition, the ores contain small quantities of gold and silver.

Sulfide ores have a low copper content and are not directly smelted because of extensive energy requirements. Rather, these ores are beneficiated at the mine. Beneficiation consists of crushing and grinding to liberate individual mineral particles, followed by physical separation using the froth flotation process. The product of flotation, ore concentrates, typically contains copper, iron, and sulfur in similar proportions (approximately 20 to 40 percent each). In comparison, oxide ores typically are not concentrated. These ores are processed hydrometallurgically by leaching with acid, and the dissolved copper is recovered by chemical precipitation on scrap iron* followed by smelting, or by solvent extraction coupled with electrowinning.

3.2 PROCESS DESCRIPTION

The pyrometallurgical processes used for extracting copper from sulfide ore concentrates are based on the strong affinity of iron for oxygen compared to the affinity of copper for this element. The conventional copper smelting process, which has been in use since the turn of the century, includes three fundamental operations:

---

*The precipitated copper-rich material is known as "precipitates."

- Roasting (optional) of the ore concentrates in the presence of air to eliminate a portion of the sulfur. (Moisture is eliminated coincidentally.)

- Smelting of the roasted (calcines) or unroasted ore concentrates with fluxes to produce an iron-copper sulfide mixture (matte) and an iron oxide slag.

- Converting (oxidizing) of the matte to eliminate the remaining iron and sulfur and yield blister copper (about 99 percent pure copper).

Briefly, the smelting of copper concentrates, high- and low-impurity, is accomplished by melting the charge and suitable fluxes in a smelting furnace. Part or all of the concentrates and fluxes may receive a partial roast before smelting to eliminate part of the sulfur and essentially all of the moisture. In the smelting furnace, a portion of the undesirable components combine with the fluxes and float to the top as a slag to be skimmed off and discarded while the copper, most of the iron and sulfur, and any contained precious metals form a product known as matte, which collects and is drawn off from the lower part of the furnace. The molten matte, ideally represented as a mixture of the compounds FeS and Cu_2S, is transferred to a converter, where air blown through the matte burns off the sulfur, oxidizes the iron for removal in a slag, and yields "blister" containing about 99 percent copper.

Typically the blister copper is fire refined in an anode furnace, cast into "anodes," and shipped to an electrolytic refinery for further impurity elimination. A schematic flowchart of the conventional smelting process is presented in Figure 3-1. Offgases containing particulates and sulfur dioxide (SO_2) in various concentrations are emitted from each operation.

Four different smelting technologies are currently used by the domestic industry: the traditional reverberatory furnace, the electric furnace, the flash furnace, and the Noranda process. A more detailed discussion of the operations involved in copper smelting and each of the various technologies is presented in succeeding subsections.

3.2.1 Roasting and Drying

Currently, 7 of the 15 domestic smelters perform the roasting step. Of the remaining smelters, five dry the charge before smelting,

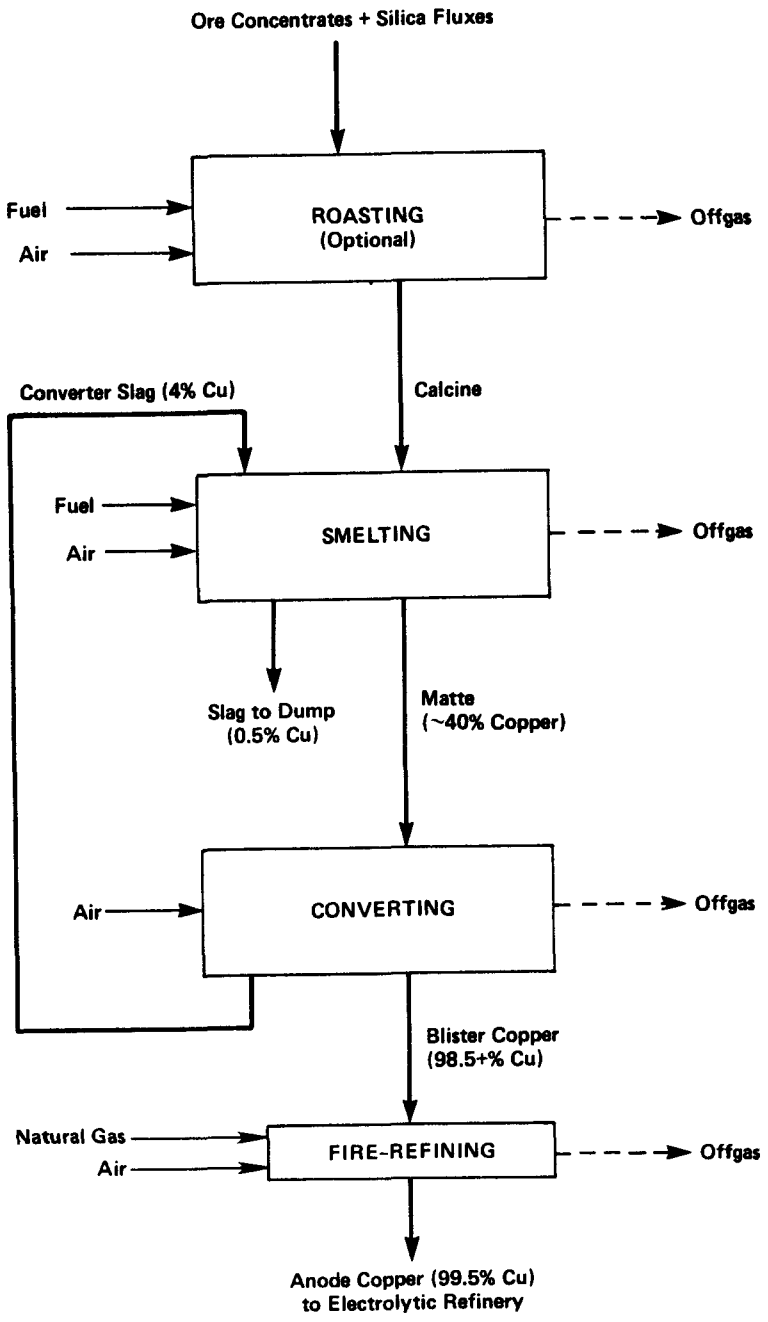

Figure 3-1. The conventional copper smelting process.

and three charge the ore concentrates directly to the smelting furnace. Whether a smelter uses roasters or not is primarily determined by the copper-to-sulfur ratio of the feed, as well as by the feed impurity level. Drying is distinguished from roasting in that sulfur and trace metals are not removed.

In roasting, copper sulfide ore concentrates are heated under controlled conditions to a high temperature (but below the melting point of the constituents) in the presence of air to fulfill two primary objectives: (1) to dry and heat the furnace charge, which results in considerable savings of energy in the smelting step and increased smelting furnace throughput; and (2) to eliminate a portion of the concentrate sulfur as SO_2 and oxidize a portion of the iron sulfides to iron oxides. The latter objective leads to an increased copper concentration in the Cu_2S:FeS matte produced during smelting. Roasting also serves to drive off a portion of volatile impurities, especially arsenic and antimony, that are present in significant amounts in some concentrates. This particular result is most important at custom smelters, which may process feeds with high impurity levels.

Numerous chemical reactions occur during roasting. Many result in the elimination of a portion of the sulfur as SO_2. A large percentage of the emitted SO_2 results from reactions with iron sulfides (such as iron pyrite, FeS_2), which are present to some extent in all concentrates. Representative reactions include the following:

$$2CuFeS_2 \rightarrow Cu_2S + 2FeS + S$$
$$FeS_2 \rightarrow FeS + S$$
$$S + O_2 \rightarrow SO_2$$
$$2FeS + 3O_2 \rightarrow 2FeO + 2SO_2.$$

The product of roasting is known as calcine. The exact composition of calcine produced from a given feed composition is dependent upon the degree of roast, i.e., the degree of sulfur removal. The degree of roast achieved depends on the roaster temperature, the residence time, and the air-to-concentrate ratio. Increasing the degree of roast

leads to increases in the grade of matte produced in the subsequent smelting step. However, the matte grade (and hence degree of roast) is ultimately limited by the fact that adequate separation of copper from iron can only be achieved if sufficient sulfur is present to maintain all of the copper and a significant portion of the iron in sulfide form during smelting. Other factors, discussed in succeeding subsections, may further limit the degree of roast selected at certain smelters. Domestic smelters generally eliminate between 15 and 50 percent of the sulfur in the charge during roasting.

Roasters in use by the industry are either of the multihearth type or the fluid-bed type. An illustration of each is presented in Figure 3-2. Fluid-bed roasters are the more modern of the two designs. Currently three smelters use fluid-bed roasters, and four smelters use multihearth roasters.

3.2.1.1 Multihearth Roasters. Multihearth roasters are cylindrical, refractory-lined vessels divided from top to bottom by (usually) six or seven refractory hearths. The outer shell is made of steel and has hinged access doors at each level. The moist concentrates enter the roaster through an annular opening at the top, dropping to the top-most or dryer hearth. Plows or rabble blades attached to a central, rotating shaft and positioned directly above each hearth serve to expose fresh surfaces of the feed to the oxidizing air. The rabble arms are set at an angle and direct the charge alternatively to the center of the hearth or to the periphery, where it drops through holes to the next lower hearth. The roasted calcine is discharged through the bottom of the roaster. The air required for the controlled oxidation of the feed enters the vessel primarily through the bottom and flows counter-currently against the descending charge. The gases exit through a flue at the top.

Multihearth roasters are started by preheating to a temperature at which the concentrates will be ignited by air. The temperature of the calcines as discharged is typically 540° to 590° C (1,000° to 1,100° F).[10] The principal roasting reactions are all exothermic.[11]

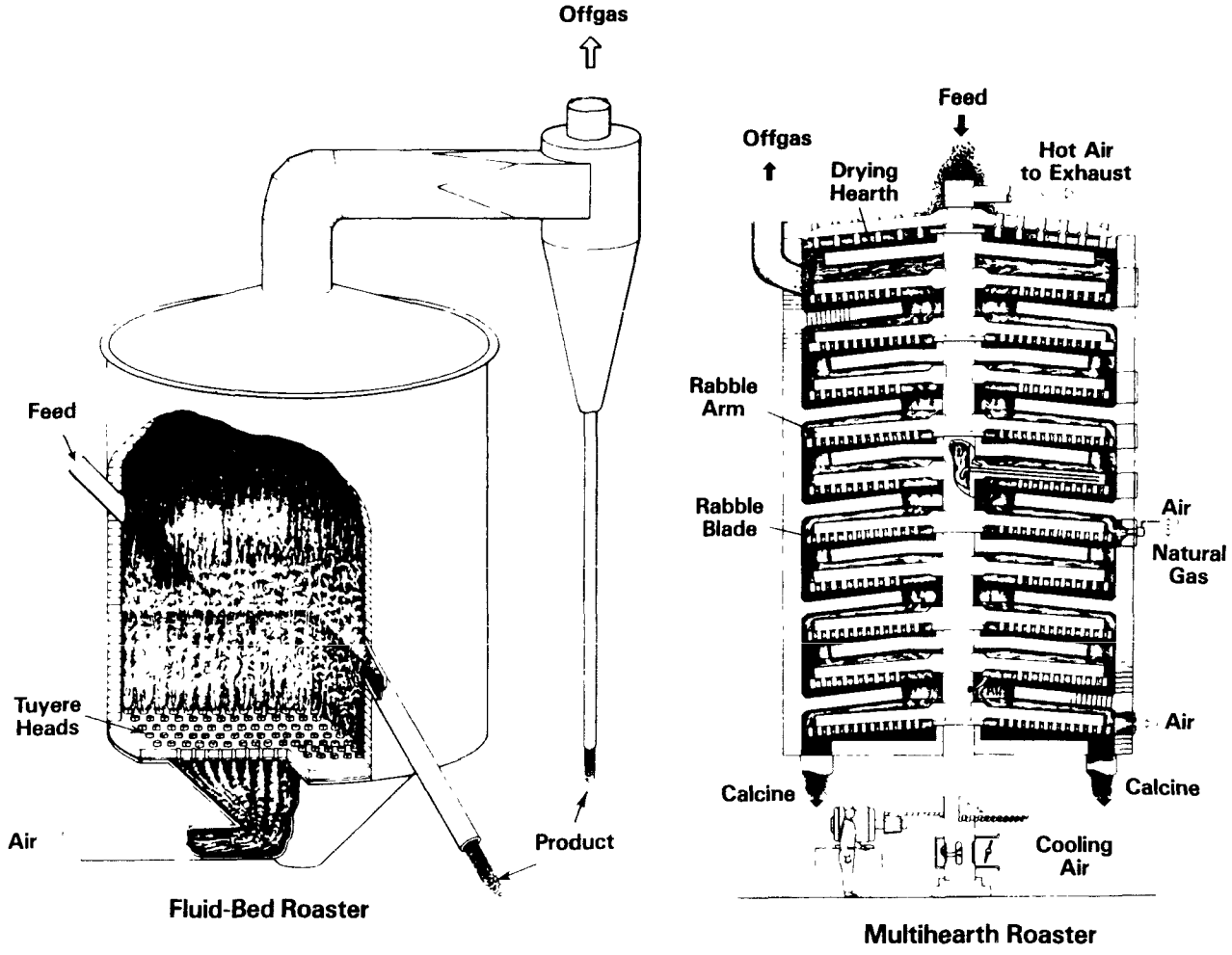

Figure 3-2. Types of roasters.

Hence, if sufficient sulfur is removed, the operation is autogenous. If the degree of sulfur removal is to be small (as in a light roast), supplementary fuel is required.

Typically, multihearth roasters process from 180 to 360 Mg/day (200 to 400 tons/day) of feed, although a high throughput unit processing 730 Mg/day (800 tons/day) is in operation at the ASARCO-Hayden smelter.[12] Offgas flow rates from existing multihearth roasters used in the domestic industry generally range from 400 to 480 Nm^3/min (14,000 to 16,000 scfm). The SO_2 concentration in the offgases from existing U.S. multihearth roasters (after gas cleaning) varies from 0.9 to 2.4 percent, on a dry basis, depending upon the smelter. The industry-wide average SO_2 concentration (weighted by the respective plant flow rates) is 1.5 percent. The low SO_2 concentrations result because substantial dilution air enters domestic units. Extensive tests of multihearth roaster gases made in a cooperative study between the United States and Yugoslavia show dry SO_2 concentrations up to 6.5 percent before gas cleaning,[13] which corresponds to levels of up to about 5.6 percent after gas cleaning. New multihearth roasters are considered capable (conservatively) of producing 4.5 percent SO_2 after gas cleaning.*

3.2.1.2 Fluid-Bed Roasters. Fluid-bed roasters are cylindrical, refractory-lined vessels having a single diffuser plate in the bottom containing tuyeres or bubble caps through which air is blown from the bottom. Finely ground ore concentrates, charged continuously into the vessel through the side, form a bed maintained in a turbulent suspension by the air introduced--the mixture of air and solids having the flow characteristics of a fluid. The finely ground feed is introduced either as a slurry through a feed pipe or in relatively dry form (6 to 12 percent moisture) through a screw conveyor or drum feeder. Roasting

---

*Based on theoretical calculations[14] that consider a unit processing 3 percent As charge. The sulfur removal considered (at 16.7 percent) corresponds to a light roast, which is typical of the ASARCO-Tacoma smelter. Five percent dilution air is assumed to enter the offgases during gas cleaning.

occurs as the solid particles come in contact with the fluidizing air. Because of the large surface area of the finely ground material exposed to the air stream, the roasting reactions occur very rapidly and the residence time in the oxidizing atmosphere is kept short. As is the case for multihearth roasters, the roaster operates autogenously if sufficient sulfur is removed.

Roasted solids are discharged by overflow through a side port and through entrainment in the offgas, which exits through the top of the vessel. Typically, the offgas contains 75 to 90 percent of the roasted calcine.[15] Hence, cyclone collectors are an integral part of the roasting operation.

The roasting temperature in domestic fluid bed roasters is similar to that of multihearth roasters, typically 540° to 650° C (1,000 to 1,200° F). Due to the high chemical efficiency of the fluid bed roasters, the feed tends to overheat from the exothermic roasting reactions. Overheating leads to overoxidation of the product, which results in the possible formation of magnetite (Fe_3O_4). This compound in undesirable in the subsequent smelting step. Hence, the roaster temperature must be carefully controlled. Cooling is performed by adding water or inert fluxes (used in the smelting step) to the concentrates.

Offgases from fluid-bed roasters typically have SO_2 concentrations of 12 to 15 percent on a dry basis, as measured at the roaster outlet. The fluid-bed roaster at the Kennecott-Hayden smelter, for example, gives an offgas SO_2 concentration of 13 percent.[16] The offgas flow rate from this unit (at the roaster outlet) has been reported at 880 Nm^3/min (31,000 scfm), when processing 1,000 to 1,100 Mg/day (1,100 to 1,200 tons/day) of feed.[16] The offgas SO_2 concentration from the Kennecott-Hayden unit after gas cleaning is estimated to be 9.6 percent on a dry basis. This concentration is considered representative for both new and existing units.

The primary advantages offered by fluid-bed roasters lie in their high offgas SO_2 concentrations and their high throughput rates as compared to multihearth roasters. Multihearth roasters offer the advantage

of providing multiple beds so that staged roasting with varying degrees of roasting intensity at each stage (plus fuel additions if necessary) can be used. Such flexibility is of notable importance if the feed contains substantial quantities of volatile impurities. (This point is discussed further in Section 3.5.2.1.)

3.2.1.3 Concentrate Dryers. Concentrate dryers are used to reduce the moisture content of ore concentrates and other feed materials before smelting. Typically, the ore concentrates as charged to the smelter contain from 5 to 15 percent moisture. Dryers are used to reduce the moisture content to less than 3 percent, and to as low as 0.1 to 0.3 percent in some cases. Drying differs from roasting in that its only purpose is to reduce the moisture of process feed materials. Because dryers operate at a relatively low temperature of 65° to 90° C (150° to 200° F), very little of the sulfur is driven off as SO_2.

There are a number of systems that can be used to dry copper concentrates, including both multihearth and fluid-bed dryers (roaster-type dryers). Perhaps the most common type, however, is the rotary dryer. The rotary dryer is a rotating cylinder inclined to the horizontal with material fed into one end and discharged at the opposite end.

In most types of dryers, air or combustion gases flow co-current or countercurrent to the movement of the concentrate. Intimate contact between the drying gases and the concentrate is usually permitted.

Dryers are always used at installations that use flash furnaces for smelting. They may be used with the other types of smelting furnaces. Also, dryers may be used upstream of fluid-bed roasters. The use of a dryer leads to a net decrease in energy requirements because less energy is required to remove moisture at a relatively low temperature than at the high temperatures of a smelting furnace.

3.2.2 Smelting

Smelting is the pyrometallurgical process in which solid feed materials are melted together with fluxing agents to form two or more immiscible layers. The objective in copper smelting is the production

of a metal sulfide mixture (matte) containing primarily FeS and Cu_2S and of a separate (oxide) slag layer containing primarily iron silicates.

During copper smelting, hot calcines from the roaster or raw, unroasted concentrates are melted in a smelting furnace with siliceous or limestone flux. Converter slag, collected dust, oxide ores, and any other material rich in copper (including precipitates) may be added to the furnace charge. Essentially all copper present in the charge, independent of its chemical state, combines with sulfur also present in the charge to form the stable compound, cuprous sulfide (Cu_2S).[17] Sulfidic iron compounds such as FeS_2 decompose, yielding SO_2 and a comparatively stable compound, ferrous sulfide (FeS). The mixture of primarily Cu_2S and FeS is known as matte, which, due to its high density, collects in the lower part of the furnace, from which it is periodically removed for further processing in the copper converters. Copper mattes produced by the domestic industry contain from 35 to 75 percent copper, with 40 to 45 percent being the most common. The percentage copper present in the matte is referred to as the matte grade. Matte also contains small amounts of other sulfides, such as Co_3S_2, Ni_3S_2, PbS, ZnS; impurities such as As, Sb, Se, and Te; and precious metals such as Au, Ag, and Pt.[18]

The remainder of the molten mass, containing primarily metal oxides and gangue materials, is known as slag. Since slag is of lower density than matte, it floats on top of the matte layer, from which it is periodically drawn off and generally discarded. Slags contain generally low percentages of copper, which is present in the form of both dissolved matte and entrained matte droplets.[19] Since slags are generally discarded directly, the copper content is a major cause of copper loss. Because the concentration of copper in the slag increases with increasing matte grade, matte grades produced in conventional practice seldom exceed 50 percent copper.

The primary purpose of the added fluxing materials is to effect the removal of iron oxides to the slag. A portion of the iron is removed during smelting, and the balance is removed during the subsequent converting operation. Iron oxide (FeO) is produced readily

during roasting and smelting because of the higher affinity for oxygen of FeS compared to Cu_2S. Molten iron oxides are highly miscible with matte. The addition of silica, however, leads to the formation of iron silicates, which are of lower density and immiscible in the matte. Iron silicates are a major component of the slag, which is ideally represented by the compound $2FeO \cdot SiO_2$.[20] Slags also usually contain small amounts of alumina and lime, which are present naturally in the charge or are added to increase the fluidity of the slag.

Currently, four different smelting furnace technologies are employed by the domestic industry. These include the reverberatory, electric, Noranda, and Outokumpu (flash) furnaces. The conventional reverberatory furnace is employed by the majority of the smelters. However, three smelters plan or expect to retire their reverberatories within the next few years in favor of other technologies. Two of these smelters favor the Inco flash furnace technology while the third is considering modifying its reverberatory furnaces for oxygen sprinkle smelting (Section 3.4.3.5).

3.2.2.1 Reverberatory Furnaces. The conventional reverberatory furnace as shown in Figure 3-3 is currently employed by 11 of the 15 domestic smelters. Reverberatory furnaces are long, rectangular structures consisting of a hearth, side and end walls, and an arched or suspended (flat) roof. Typical dimensions are about 11 M (36 feet) in width and 40 m (130 feet) in length.[21] Reverberatory furnaces typically process from 800 to 1,200 Mg (900 to 1,300 tons) of charge per day. In a reverberatory furnace, fossil fuels such as oil, gas, or pulverized coal are burned above the charge being smelted. Furnace burners are placed in one end wall, and hot gases exit the far end wall. Flames from the burners may extend half the length of the furnace. Temperatures at the burner end of the furnace exceed 1,500° C (2,730° F). A portion of the heat radiates directly to the charge lying on the hearth below, while a substantial part radiates to the furnace roof and walls and is reflected down to the charge.

In addition to smelting the charge and allowing the settling of matte and slag into separate layers, a major function of the conventional

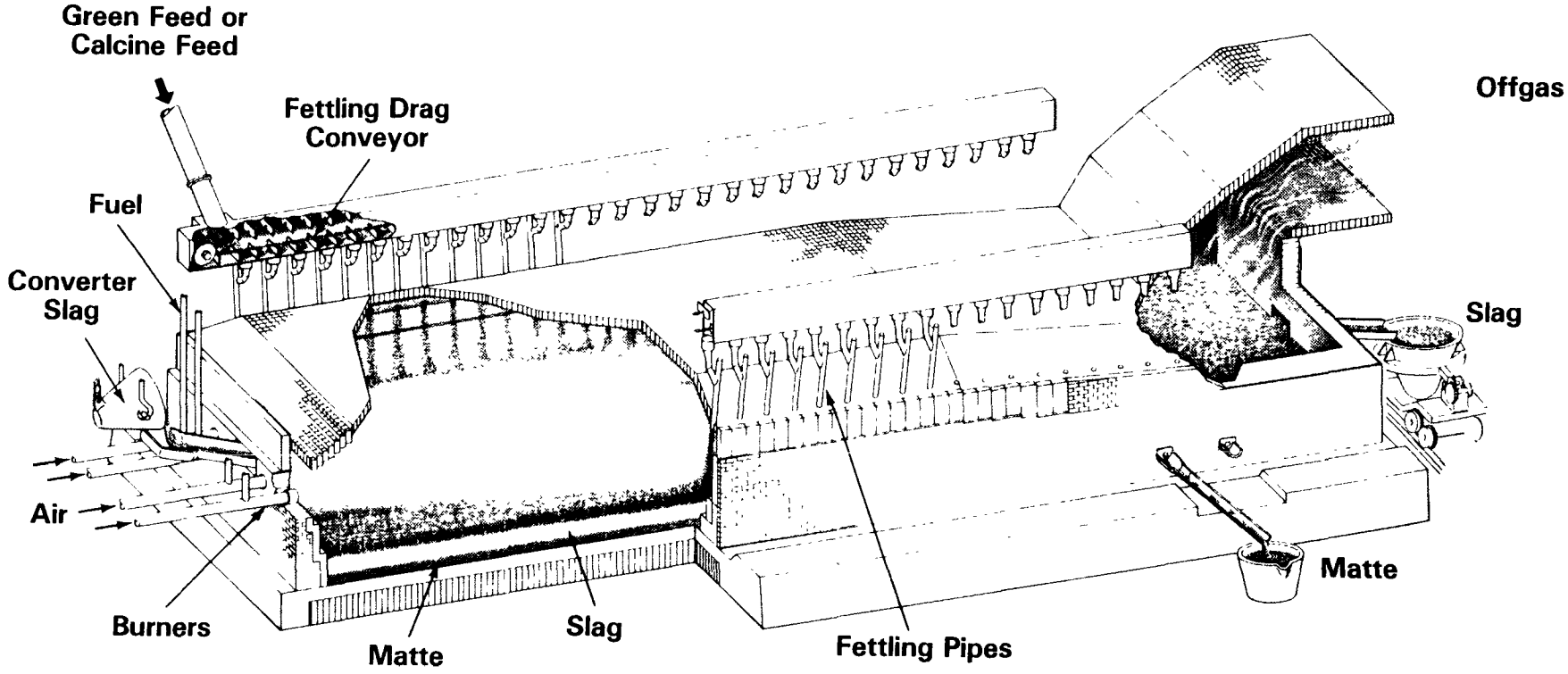

Figure 3-3. Reverberatory smelting furnace.

reverberatory furnace is to simultaneously recover copper from slag produced in the converters. Molten converter slag is returned to the furnace, whereupon matte and copper that are mechanically entrained in this slag settle out by gravity. To some extent, copper oxides trapped in the slag are reduced to Cu_2S by reactions with iron sulfide and also settle out. The copper content of the slag from the reverberatory furnace is typically 0.3 to 0.6 percent.

Reverberatory smelting is a continuous process, although charging is intermittent. In green-charged furnaces, the concentrates and fluxes are typically charged along the sidewalls (side feeding), where they form "banks" or piles that protect the sidewall refractory from burner heat. These banks slowly melt into the bath. Charging is performed using drop pipes ("fettling" pipes) that penetrate the furnace roof and are spaced regularly along the length of the furnace on each side. Charge is delivered to the drop pipes by enclosed drag chain conveyors (see Figure 3-3) or by moveable charge bins atop the furnace that direct the feed to one drop pipe at a time. Typically, most of the charge is placed along 60 to 70 percent of the furnace length (from the burner end), which constitutes the smelting zone. The remainder of the furnace is termed the settling zone, in which matte entrained in the slag settles to the matte layer. Green-charged furnaces are also charged, in limited cases, by charge slingers. These devices are high-speed conveyors that "throw" the charge into the furnace through ports that are opened along the sidewalls. The result is to spread the charge evenly over the bath. The use of three slingers on each side of the reverberatory furnace at the Phelps Dodge-Ajo smelter has been reported.[22]

Calcine-charged reverberatory furnaces are typically charged using fixed or retractable gun-type feed pipes penetrating the furnace sidewalls (Wagstaff guns) that spread the charge uniformly over one-half to two-thirds of the surface of the molten bath. Typically, two such feeders are present on each side of the furnace. Furnaces charged with Wagstaff guns generally employ water-cooled panels on the outside of the furnace at the slag line to protect the sidewall refractory from burner heat. Calcine may also be charged through the roof arch

at either the center or the sidewalls. Sidewall charging of calcines, using a drag chain conveyor/drop pipe system similar to that used on green-charged furnaces, is used in some cases. However, the resulting charge banks are not as substantial as those produced with green charge because of the comparatively free-flowing nature of hot calcine.

Reverberatory furnaces produce a large volume of offgases containing a relatively low SO_2 concentration. Both the large offgas flow rate and the low SO_2 concentration result because most of the heat is produced from the combustion of fossil fuel in air, which is 79 percent inert nitrogen. Offgas flow rates have been reported at 1,800 to 2,100 Nm^3/min (63,000 to 74,000 scfm)[23] and may be substantially higher.

The principal mechanism for SO_2 formation within the reverberatory furnace is the volatization and oxidation of pyritic (loosely bound) sulfur. Typically, from 10 to 30 percent of the sulfur contained in the original concentrate feed is eliminated in the furnace offgases. The average SO_2 concentration in the offgases from domestic calcine-charged furnaces (after gas cleaning) varies from 0.4 to 1.5 percent SO_2 on a dry basis depending upon the plant, with an industry-wide average (as weighted by respective flow rates) of 0.8 percent SO_2. Domestic green-charged furnaces produce average SO_2 concentrations on a dry basis ranging from 1.0 to 2.0 percent, depending upon the plant. The industry-wide average for green-charged furnaces is 1.4 percent SO_2. The variation in SO_2 concentration is largely due to the difference in charge composition, i.e., the availability of pyritic sulfur, although the infiltration of air into the gas handling equipment downstream of the furnace is also a factor.

New calcine-charged reverberatory furnaces processing high-impurity feed materials (see Section 3.5) are considered capable of producing 1.7 percent SO_2 in the offgases (on a dry basis) after gas cleaning.*

---

*This concentration is based on theoretical calculations using the average charge composition for the (typical) year 1979 at the ASARCO-Tacoma smelter. Calculations assume (1) 28.4 percent sulfur removal in the furnace, (2) 40 percent matte grade, (3) natural gas fuel, (4) 4.5×10^6 Btu required per ton calcine smelted, (5) 1 percent oxygen in the gases entering the furnace uptake, and (6) 100 percent dilution of the uptake gases.

The primary advantage afforded by reverberatory furnaces over most other smelting technologies is their versatility. Feed materials that are wet or dry, lumpy, or fine may all be smelted readily. A major disadvantage of these furnaces is the weak SO_2 stream produced. Furthermore, since the reverberatory furnace uses little of the inherent energy of the sulfide charge, its energy requirement is among the greatest of the major pyrometallurgical processes.

3.2.2.2 Electric Furnaces. Electric smelting furnaces are employed by two of the domestic smelters. As shown in Figure 3-4, the heat required for smelting in these furnaces is generated by the passage of electric current through the molten bath. Carbon electrodes dip into the slag layer of the bath, forming an electrical circuit. As electric current is passed through the circuit, the resistance of the slag causes the generation of heat, which results in smelting temperatures.

Typically, electric furnaces used for matte smelting are rectangular and are about 35 m (115 ft) long by 10 m (33 ft) wide. A furnace of this size uses six Söderberg-type electrodes, 1.8 m (6 ft) in diameter, which are spaced uniformly along the long axis of the furnace.[24] The current flow and voltage between pairs of electrodes are on the order of 30,000 amps and 500 volts, respectively.[24] The electric furnace at Inspiration Consolidated Copper Company is designed to process about 1,640 Mg/ day (1,800 tons/day) of feed.

Feed to electric furnaces is typically charged through the roof of the furnace, near the electrodes. The feed generally consists of dried concentrates or calcines. The charging of wet concentrates is avoided because the moisture can cause steam explosions.[25] The unsmelted charge materials float on top of the molten bath. Heat is thus transferred from the hot slag (where the heat is produced) to the charge floating on its surface. Keeping the bath covered with charge maximizes the rate of heat transfer to the charge. Also, the floating charge reduces heat losses from the bath and prevents overheating of the roof refractories.[26]

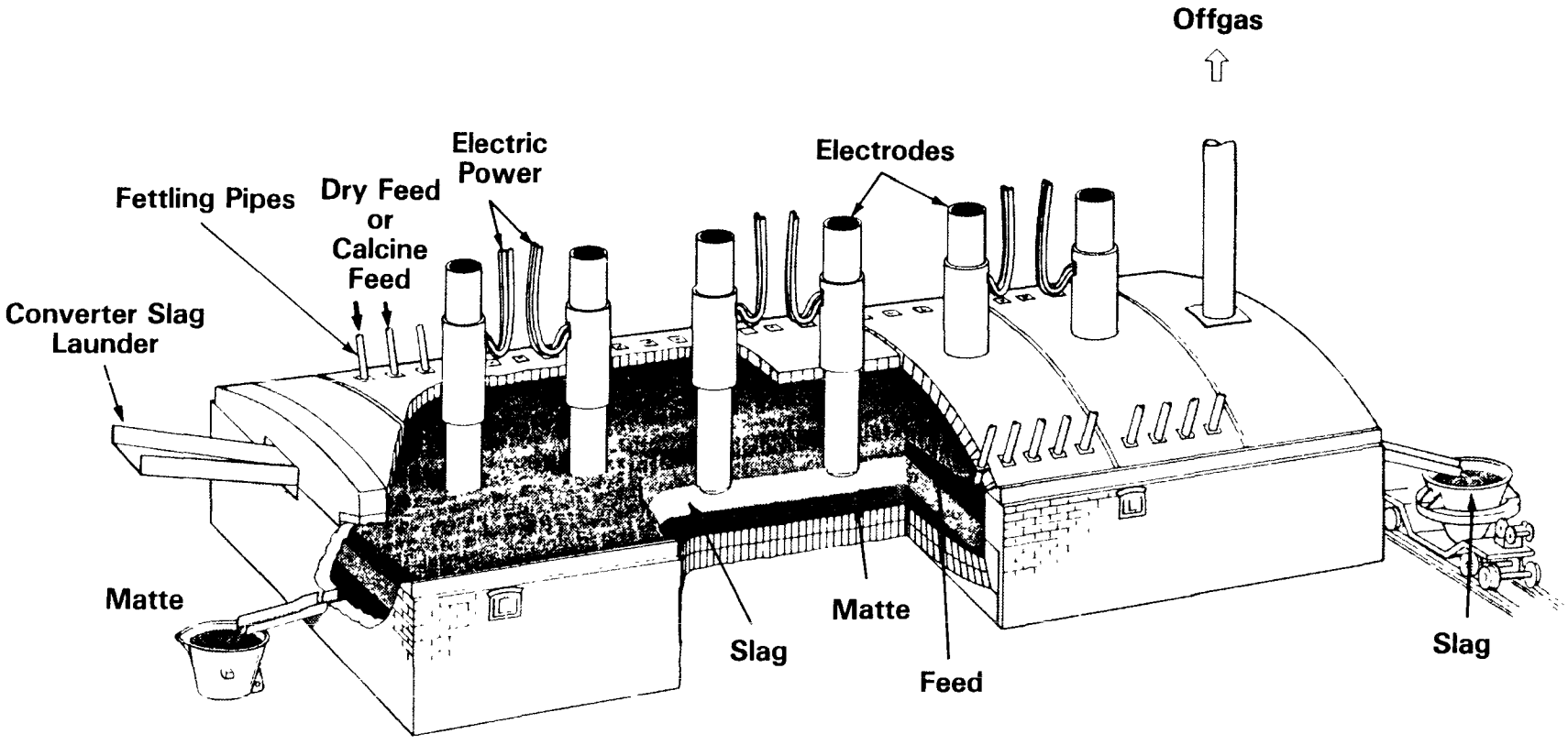

Figure 3-4. Electric smelting furnace.

Electric furnaces are similar to reverbs in that they offer essentially the same degree of versatility. The physical and chemical changes occurring in the molten bath of an electric furnace are similar to those occurring in a reverberatory furnace. Furthermore, molten converter slags are normally returned to electric smelting furnaces for the recovery of entrained copper, as with reverberatory furnaces. A major advantage of electric furnaces over reverberatory furnaces is their ease of control, resulting from a high concentration of SO_2 in the exhaust gases (on the order of 5 percent).[27] Furthermore, since combustion air is not required, the offgas flow rates are less than half of those in reverberatory furnaces. The Inspiration furnace, for example, produces approximately 850 Nm^3/min (30,000 scfm) of offgas containing from 4 to 6 percent SO_2 on a dry basis.[28] Low offgas flow rates minimize the size and cost of downstream gas handling equipment.

The primary disadvantage of the electric furnace is that, like the reverberatory furnace, it makes limited use of the energy potentially available from oxidizing the sulfide minerals of the charge. Furthermore, its operating costs tend to be high because of the high price of electricity.[29]

3.2.2.3 Flash Furnaces. In contrast to reverberatory and electric furnaces, flash furnaces use the heat evolved from the partial oxidation of their sulfide charge to provide much or all of the energy required for smelting. The result is that the energy required for flash furnace operation is considerably less than that associated with reverberatory and electric furnaces. Flash furnaces also produce offgas streams containing high concentrations of SO_2, which may be efficiently recovered as sulfuric acid or liquid SO_2. For these reasons, most of the world's new smelting furnaces installed since 1965 have been of the flash type.[30] Currently, one of the domestic smelters employs a flash furnace, and two others intend to convert to flash smelting technology.

In flash smelting, dried ore concentrates and finely ground fluxes are injected together with oxygen, preheated air, or a mixture of air and oxygen into a hot furnace of special design. Within the furnace, the sulfide particles react rapidly with the oxidizing gas, releasing heat. Important reactions include the following:[30]

$$4CuFeS_2 + 5O_2 \rightarrow 2(Cu_2S \cdot FeS) + 2FeO + 4SO_2$$
$$2FeS + 3O_2 \rightarrow 2FeO + 2SO_2.$$

The melted droplets fall to the bath below, where the matte- and slag-forming reactions are completed. The matte droplets settle through the slag layer to form the matte layer.

The combustion reactions use essentially all of the oxygen contained in the process atmosphere. Consequently, the regulation of the oxygen/ concentrate ratio in the furnace controls the extent to which the flash combustion reactions proceed and thus determines both the grade of matte produced and the heat released for smelting the furnace charge. Increasing the incoming temperature or oxygen content of the combustion air also effectively increases the heat available for smelting. As a result, in some cases it is possible for the flash combustion and smelting reactions to occur autogenously. Under these conditions, the heat released by the oxidation of iron and sulfur is sufficent to smelt the furnace charge.

The charge to a flash smelting furnace must be fine grained, and essentially "bone dry" to insure an even and homogeneous distribution of the charge as it is injected into the furnace. The copper concentrates should be of a fineness corresponding to at least 50 percent minus-200 mesh, and the fluxing material should be of a fineness corresponding to at least 80 percent minus-14 mesh.[31] Since most concentrates are obtained from ores by flotation techniques, their fineness normally meets these requirements without further grinding.[31] The fluxing materials, however, usually require additional grinding beyond that necessary for use in reverberatory or electric smelting furnaces.

In most cases it is necessary to dry the charge to bone-dry conditions (0.1 to 0.3 percent moisture) before smelting, as the concentrates typically contain from 5 to 15 percent moisture.[31] It is common practice to use the drying facilities not only for drying the charge, but also for blending the fluxing materials and the various copper concentrates available to provide a charge of uniform composition.

It should be noted that the charge is not roasted, as the flash combustion process makes use of the roasting reactions to melt the charge.

The principle advantages of flash furnaces lie in their low energy requirements, their high SO_2 strength in the offgases, and their high production rates. The productivities of flash furnaces are on the order of 8 to 12 Mg of charge per day/m^2 (0.8 to 1.2 tons of charge per day/ft^2) of hearth area, which is two to four times that of reverberatory furnaces.[32]

The principle disadvantage of flash smelting is that the copper content of the furnace slag tends to be higher than that of reverberatory and electric furnaces. As a result, the use of separate facilities may be required to recover some of the copper from the flash furnace and converter slags before discard.

Flash smelting technology has been developed by two different companies: International Nickel Company (Inco) in Canada and Outokumpu Oy in Finland. The major difference between the two technologies is in the design of the smelting furnace and in the oxidizing environment within the furnace. The Inco furnace uses pure oxygen, while the Outokumpu furnace employs preheated air or oxygen-enriched air as the oxidizing medium. Currently, 30 Outokumpu flash furnaces are operating or are licensed to operate worldwide. Two Inco flash furnaces are currently operating worldwide, and two additional units are slated for construction in the United States. The larger number of Outokumpu furnaces is attributed to the fact that Outokumpu has been marketing its technology for a number of years, while Inco has only recently offered its technology for license.

3.2.2.3.1 Inco flash furnaces. The Inco flash furnace, shown in Figure 3-5, is the simpler of the two flash furnace designs. The furnace used by Inco in Sudbury, Ontario, is about 24 m (80 ft) long, 7 m (24 ft) wide, and 6 m (20 ft) high at the ends.[33] The furnace uptake extends the full width of the furnace at its center. For gas tightness, the furnace is essentially totally enclosed in a shell made of mild steel, 1 cm (3/8 in.) thick. This particular furnace has a nominal capacity

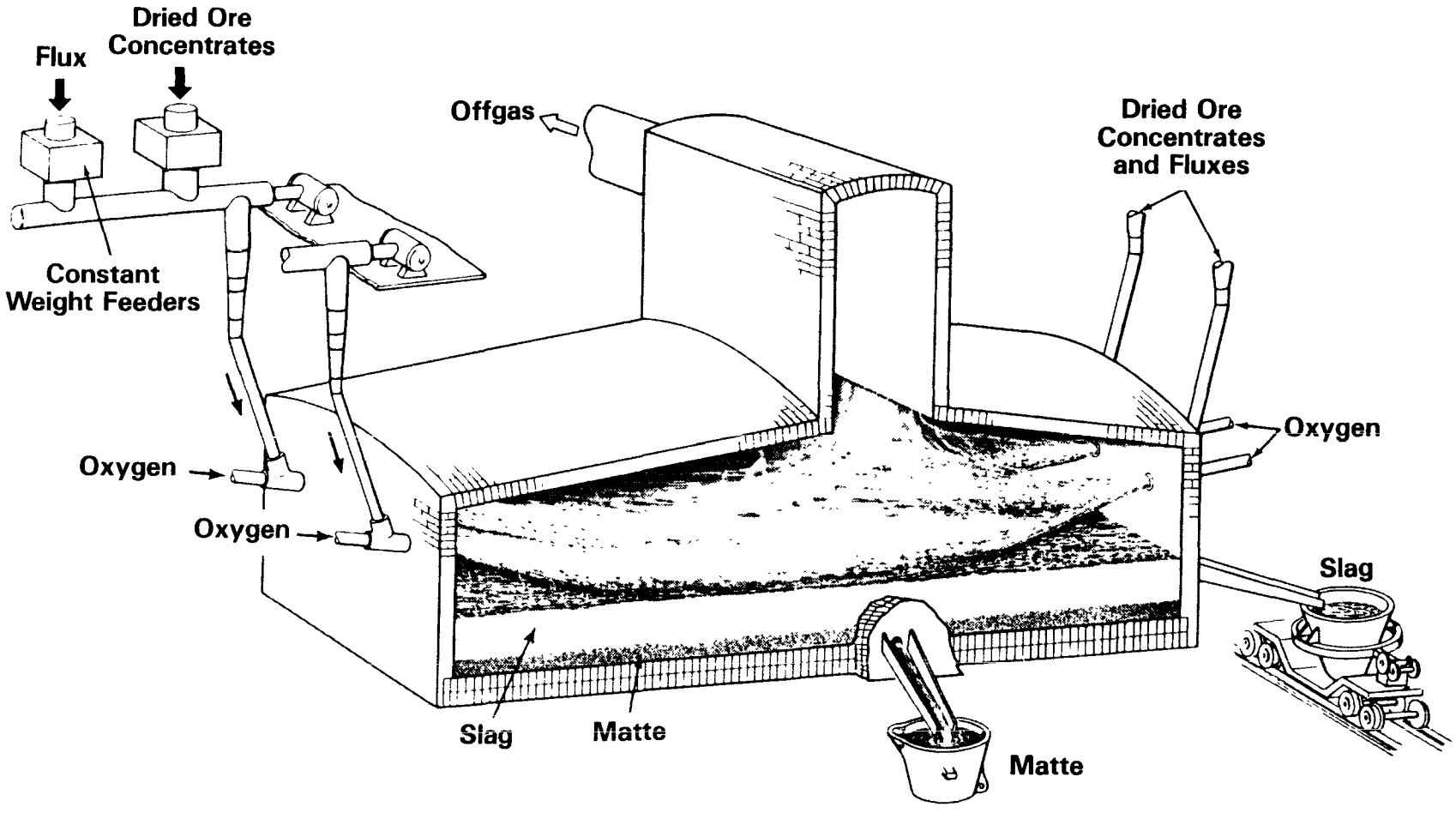

Figure 3-5. Inco flash smelting furnace.

of 1,360 Mg/day (1,500 tons/day) of dry concentrate,[33] although extended operation at feed rates in excess of 1,630 Mg/day (1,800 tons/day) has been demonstrated.[34]

Dried ore concentrates, fluxes, and commercial oxygen are blown horizontally into the furnace through four water-cooled burners, two at each end. This design produces a short flame and a uniform temperature over the entire hearth area. Water-cooled copper jackets faced with refractory brick cover approximately 20 percent of the sidewalls, mainly in the region below the gas offtake. Matte is tapped from the central zone of one sidewall, while slag is skimmed from beneath the burners at one end of the furnace.

Because pure oxygen rather than air is the oxidizing medium in the furnace, the concentration of sulfur dioxide in the Inco furnace offgases is very high, normally in the range of 70 to 80 percent.[33] At this concentration, the gases are suitable for the economic production of sulfuric acid or liquid SO_2. The use of oxygen rather than air has the added advantage of providing a low off-gas volume per unit of charge. The offgas flow rate from Inco's furnace in Sudbury when operating at 1,360 Mg/day (1,500 tons/ day) of feed is 130 Nm^3/min (4,600 scfm).[33] Several benefits accrue from the low offgas volume. The size and cost of downstream gas-cleaning equipment is reduced substantially. Also, because of the relatively low volume and heat content of the gases, Inco maintains that the use of a waste heat recovery system downstream of the furnace is not justified.[33] (The heat content of the gases represents about 20 percent of the heat generated in the furnace.) Finally, the low offgas flow rate results in a low gas velocity leaving the furnace. As a result, the dusting rate from the furnace is low, amounting to 2 to 3 percent of the feed rate.[33]

The grade of matte produced at the Sudbury installation is reported to varying between 40 and 50 percent copper, depending upon the throughput rate and the amount of secondary materials charged to the furnace.[33] The feed at this installation is a chalcopyrite concentrate analyzing 30 percent Cu, 30 to 31 percent Fe, and 33 percent S. Inco can return

about 50 percent of the converter slag to the furnace for copper recovery. The remainder has to be processed in other facilities because converter slag is an important bleed for the impurity nickel, which occurs at fairly high levels in the feed at this installation. Inco flash furnaces appear to be useful, however, for processing all of the converter slag generated. The flash furnace slag at Inco, which contains 0.6 to 0.7 percent copper, is discarded without additional treatment.[33] This copper concentration is somewhat higher than that typically encountered in slags produced by reverberatory furnaces. The Inco furnaces to be installed at the ASARCO-Hayden smelter will process all of the converter slag, and the flash furnace slag will be discarded without additional treatment.[35]

The recycle of converter slag to the furnace requires that some additional heat be provided to maintain the bath temperature. Heat can be provided readily by increasing the oxygen-to-concentrate ratio, which results in the flash combustion of additional sulfur and iron. This scheme also leads to an increase in the matte grade. Tests made by Inco indicated that the matte grade increased from 40.5 to 45.0 percent copper when 43 percent of the converter slag was reverted to the furnace.[33]

Inco has reported that the furnace matte grade can be decreased by the addition of coal to the feed.[33] The possibility of decreasing matte grade by this means was established when Thompson copper concentrates containing 4 to 12 percent carbon (as graphite) was processed as a component of the feed. During the period from 1964 to 1969, a total of 30,000 Mg (33,000 tons) of Thompson concentrates were processed at a rate of up to 100 Mg/day (110 tons/day).[36] The total feed rate to the furnace was 1,400 to 1,600 Mg/day (1,540 to 1,760 tons/day); hence the Thompson concentrates supplied up to about 1 percent carbon to the total feed. All of the carbon was combusted in the furnace. The result was a decrease in matte grade and a slight drop (of 2 to 5 percent) in the SO_2 concentration in the offgases.[36] Inco has tested the use of coal mixed with the feed in a bench-scale furnace

and in pilot-plant tests.[33] Inco reports that additions of less than 1 percent coal lead to decreases in matte grade of from 10 to 15 percentage points, depending on the composition of the feed.[33]

3.2.2.3.2 Outokumpu flash furnaces. The Outokumpu flash furnace, shown in Figure 3-6, consists of three distinct sections: a reaction shaft, a settler, and an uptake shaft. The dried copper concentrates and fluxing materials are injected continuously down the reaction shaft onto the slag surface through concentrate burners located at the top of this shaft. In the burners, the charge is mixed with preheated air (450° to 1,000° C) or oxygen enriched air, preheated or ambient.[37] Large furnaces contain up to four burners.

Recent Outokumpu flash furnaces are 20 m (65 ft) long (inside), 7 m (23 ft) wide, and 3 m (10 ft) high (hearth to roof). The firing towers are 6 m (20 ft) diameter and 6 m (20 ft) high (above the roof), while the offtake towers are the width of the furnace (7 m [23 ft]), 3 m (10 ft) long, and 6 m (20 ft) high. This size furnace treats 1,200 Mg (1,320 tons) of dry charge per day.[38]

The SO_2 concentration in the offgases from Outokumpu furnaces is high, typically 10 to 30 percent, allowing the efficient removal of SO_2 as sulfuric acid.[39] The SO_2 concentration varies depending upon the copper concentrate analysis, the grade of matte produced, the degree of oxygen enrichment, and the degree of combustion air preheat. The furnace matte grade is typically in the range of 50 to 65 percent.[40]

The offgas flow rate for the Outokumpu furnace at the Phelps Dodge-Hidalgo smelter has been reported at 2,200 Nm^3/min (77,700 scfm), with an SO_2 concentration of 13 percent, when operated at a feed rate of 2,440 Mg/day (2,680 tons/day).[41] This furnace uses preheated combustion air that is not oxygen enriched.

Unlike the Inco flash furnace, Outokumpu furnaces are not autogenous unless the ingoing air contains 40 percent or more oxygen and oil burners are placed at the top of the combustion tower and in the hearth (settling zone).[38] At the Hidalgo flash furnace, additional heat is provided by preheating the combustion air, firing oil burners, and mixing finely ground coal with the feed. Extensive use is made of

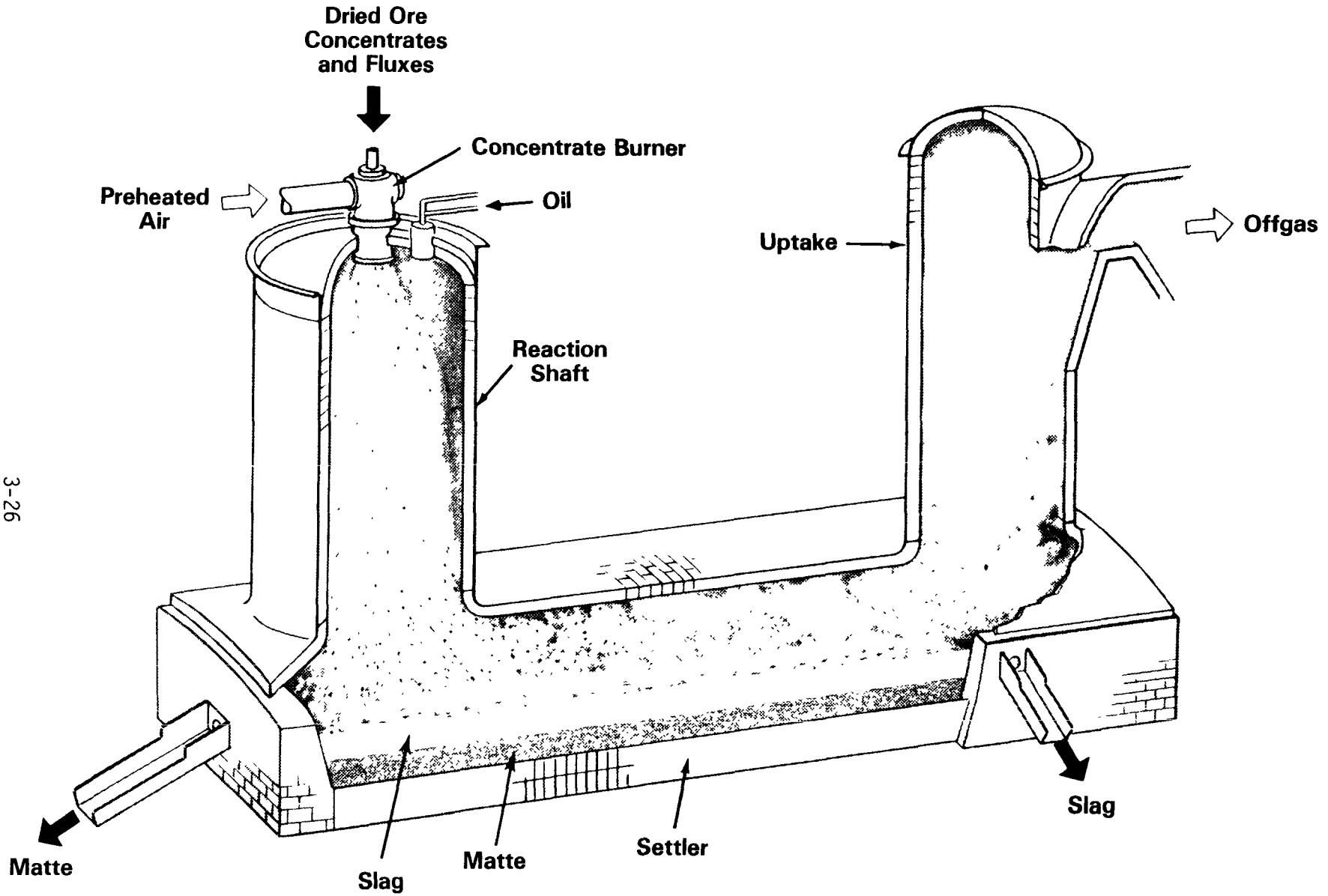

Figure 3-6. Outokumpu flash smelting furnace.

coal mixed with the feed to supply additional heat at the Toyo smelter in Japan.[42] A discussion of the Toyo experience is provided in Appendix E.

The concentration of copper in slags produced by Outokumpu flash furnaces tends to be fairly high, typically 1 percent.[43] As a result, this type furnace cannot be used efficiently to recover copper from converter slags. Also, the slags from the flash furnace must themselves be retreated in a separate process to minimize the loss of copper.

Dust losses in the Outokumpu flash smelting process are also fairly high, up to 10 percent of the feed,[38] which is substantially greater than the dust losses encountered with Inco flash furnaces. High dust losses result because significant quantities of concentrate particles do not settle from the gas/solid suspension during their passage through the furnace.

3.2.2.4 Slag Cleaning Furnaces. Slag cleaning furnaces are designed to recover a portion of the copper entrained in molten slags from smelting furnaces and converters. These furnaces are typically used at Outokumpu flash smelting installations because of the relatively high copper content of the slag from this technology. An electric slag cleaning furnace is currently operated at the Phelps Dodge-Hidalgo smelter.

Slag-cleaning furnaces are typically small, low-powered electric furnaces. Normal furnace operating temperature has been reported at 1,230° to 1,320° C (2,250° to 2,400° F).[44] Slags charged to the furnace are allowed to settle under quiescent and reducing conditions. Reducing conditions are maintained by the addition of coke or iron sulfide to the bath. The addition of iron sulfide serves to recover copper that is in oxide form and return it to the matte phase according to the following reaction:

$$FeS(\ell) + Cu_2O(\ell,slag) \rightarrow FeO(\ell,slag) + Cu_2S(\ell,matte).$$

The residence time of slags within the furnace is of the order of 5 hours.[45] The slag discharged typically has a copper concentration of 0.4 to 0.5 percent.[45]

Although smelting is not the primary objective of slag-cleaning furnaces, these furnaces may be used to smelt some revert materials.

It should be noted that an alternative to slag-cleaning furnaces for recovering copper from smelting furnace and converter slags is the froth flotation process, which yields somewhat better copper recovery but requires that the slags be slow cooled, crushed, and ground before processing. Froth flotation is employed for the recovery of slag-contained copper at the Kennecott-Garfield smelter, which uses the Noranda process (Section 2.3.5.1).

3.2.3 Converting

The converting operation is the final major step in the pyrometallurgical extraction of copper from sulfide ore concentrates. The purpose of converting is to eliminate the remaining iron and sulfur present in the matte, leaving molten "blister" copper (98.5 to 99.5 percent Cu). The blister copper product is subsequently fire refined and electrorefined to produce high-purity copper (99.99 + percent Cu).

Upon reaching the converters, all of the rock (gangue) and a portion of the iron and sulfur present in the original ore concentrates have been eliminated. The matte charge consists of a Cu_2S:FeS melt containing small amounts of other elements and precious metals. The batch-converting process serves to eliminate, sequentially, the FeS component and the sulfur present in the remaining Cu_2S component. As mentioned previously, the separation is based on the high affinity of iron for oxygen, as compared to the oxygen affinity of copper. The quantity of sulfur eliminated during converting operations generally amounts to 40 to 70 percent of the sulfur in the original ore concentrates.

The extraction of copper is accomplished by adding siliceous fluxes to the molten matte and then blowing air through the mixture to oxidize the iron sulfides to iron oxides. The iron oxides combine with the silica fluxes to form a slag, which is removed from the converter. The copper sulfide or "white metal" that remains is then oxidized to blister copper through continued blowing. The oxidation reactions occuring during converting are highly exothermic, and the entire operation is autogenous. In fact, the converter gradually heats up during the process. To prevent excessive temperatures, which lead to

high refractory wear, substantial quantities of "cold dope" (revert materials; copper scrap; and, in some cases, cast blister copper) are charged during the converting cycle.

Aside from their role in the elimination of iron and sulfur, converting operations are also very important in the elimination of a number of other impurity elements. The role of converters in impurity elimination is discussed in Section 3.5.2.3.

Generally within the domestic industry, two or three converters (one of which is a standby) are associated with each smelting furnace.

3.2.3.1 Peirce-Smith Converters. Converting operations in both the domestic and foreign industries are dominated by the Peirce-Smith converter. Domestically, these vessels are used at 14 of the 15 smelters. As shown in Figure 3-7, the side-blown Peirce-Smith unit is a horizontal, refractory-lined steel cylinder with a large opening or "mouth" in the side. Typical (inside) dimensions are 4 m (13 ft) diameter by 9 m (30 ft) long. A vessel of this size normally processes from 350 to 450 Mg/day (380 to 500 tons/day) of matte. Compressed air or oxygen-enriched air is supplied to the converter through a header along the back of the vessel, from which a horizontal row of generally 40 to 50 tuyeres provide passages through the converter shell into the interior. The vessel rotates about its major axis, swinging the converter mouth through an arc of about 120° from the vertical. When the converter is in the upright or blowing position, a large retractable hood, referred to as the primary hood, is lowered over the mouth to capture the escaping gases.

Molten matte produced in the smelting furnace is charged to the converter through the mouth by ladles, using overhead cranes, filling the vessel approximately half full. Silica fluxing materials are also charged, either through the mouth or through one end of the converter, as shown in Figure 3-7. During charging the converter is rotated to bring the mouth to an angle of about 45° from the vertical, as shown in Figure 3-8. With the converter mouth in the charging position, the tuyeres are above the level of the matte. Following charging of the matte and fluxing materials, air or oxygen-enriched air is supplied

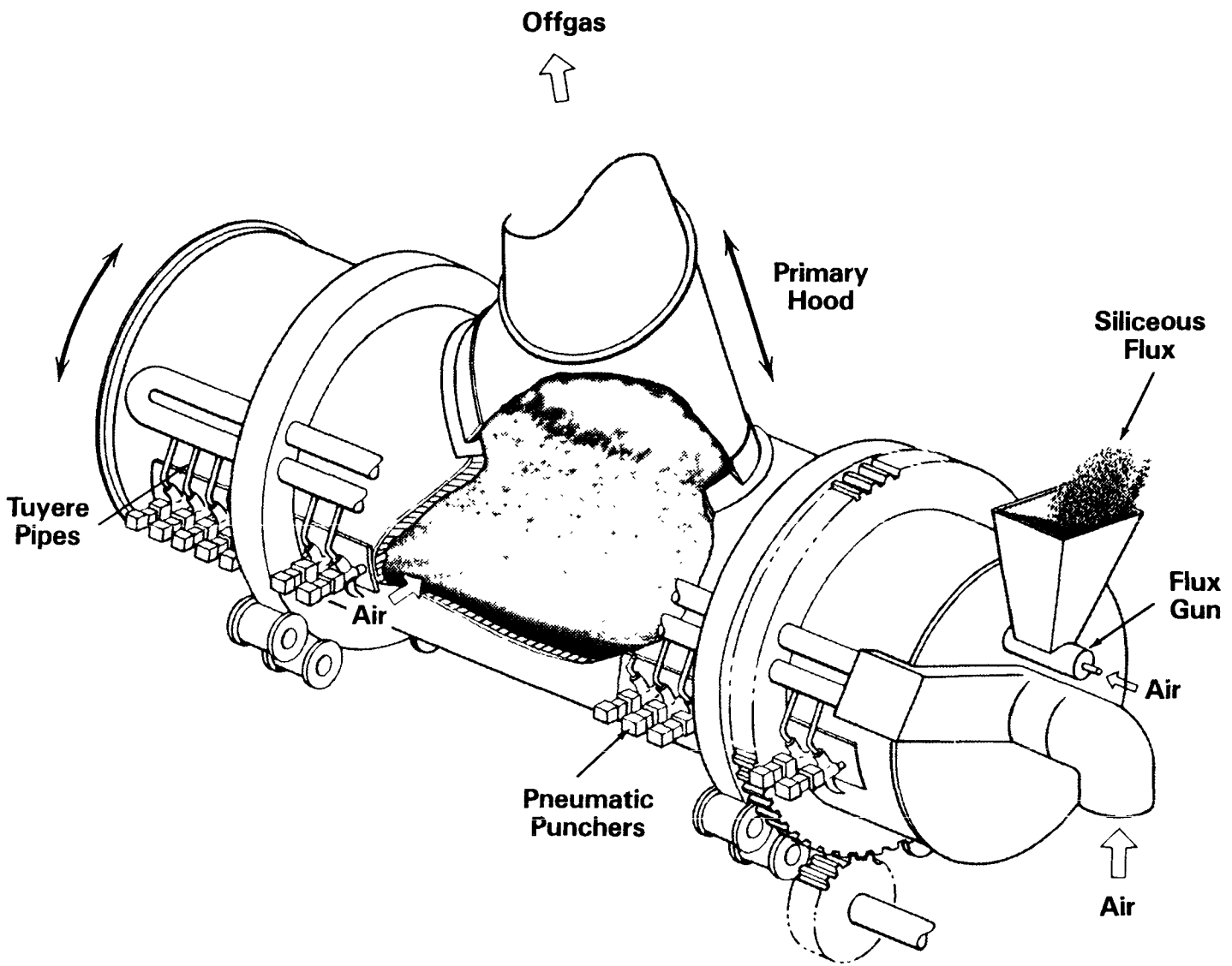

Figure 3-7. Peirce-Smith Converter.

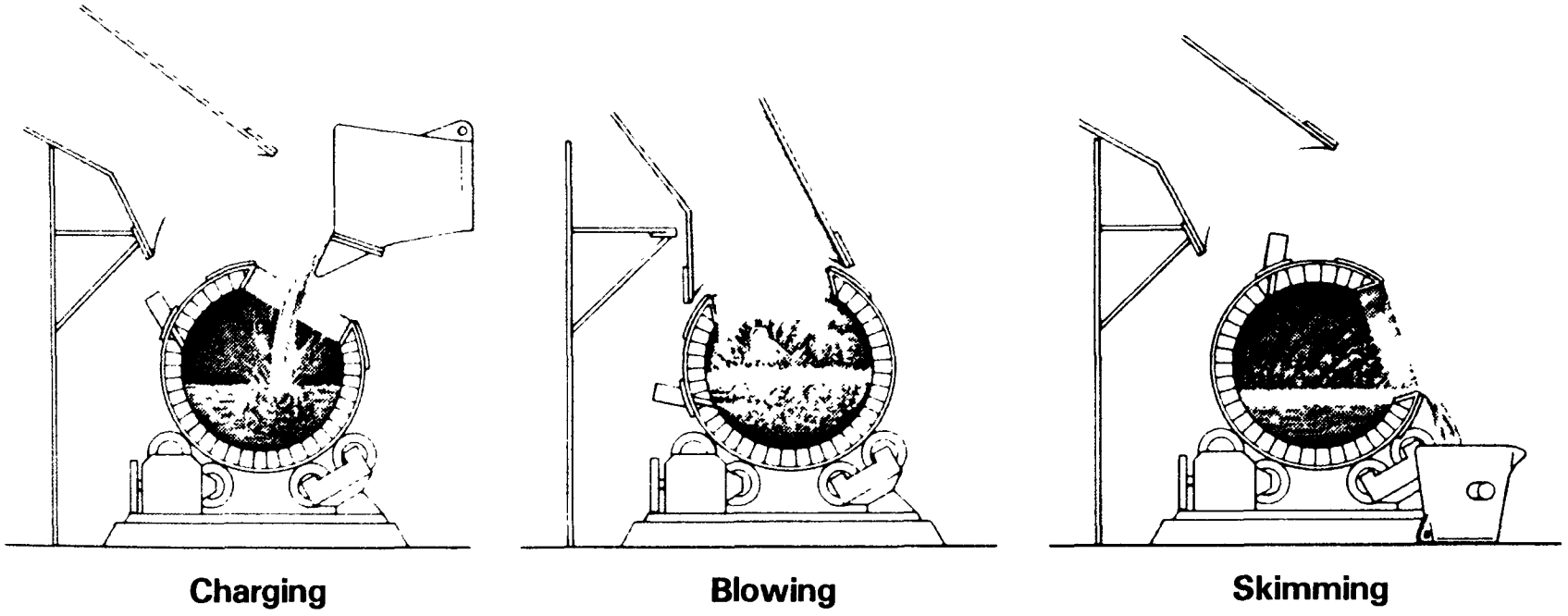

Figure 3-8. Copper converter operation.

under pressure to the tuyere line, and blowing commences. Blowing rates are generally between 425 and 740 Nm^3/ min (15,000 to 26,000 scfm). The converter is then rotated, as shown in Figure 3-8, swinging the converter mouth to a vertical position and submerging the tuyeres to a depth of 6 to 24 in. below the surface of the matte.[46] The primary hood is then lowered into position over the mouth.

As air blown through the tuyeres enters the molten matte, the matte in the immediate vicinity of the tuyeres is cooled, forming accretions which obstruct the tuyere openings and reduce the blowing air flow rate. To prevent complete obstruction of these openings, the tuyeres are mechanically cleaned every several minutes by a machine that forces an iron bar through each tuyere passage.

As the tuyere air passes through the molten matte, the iron sulfide is converted to iron oxide and SO_2 with the release of substantial heat according to the following reaction:

$$2FeS + 3O_2 = 2FeO + 2SO_2 \ .$$

The sulfur oxides are removed in the converter gases discharged through the converter mouth. The oxidizing conditions also lead to the formation of solid magnetite, according to the following empirical relation:

$$6FeO + O_2 \rightarrow 2Fe_3O_4.$$

The iron oxide produced combines with the molten silicates to produce an immiscible slag according to the usual slagging reaction:

$$2FeO + SiO_2 = 2FeO \cdot SiO_2.$$

This stage of the converter cycle operation is termed the slag blow.

Blowing is continued until a substantial layer of slag is formed in the converter. The vessel is then rotated (after raising the primary hood) as shown in Figure 3-8, swinging the converter mouth through an arc of about 120° from the vertical, and raising the tuyere line above the surface of the molten bath. The air supply to the tuyere line is shut off and the blowing discontinued. Slag is skimmed or poured from the converter into a ladle and returned to the smelting furnace or transferred to slag treatment facilities for the recovery

of copper contained in the slag. The converter is then rotated to the charging position, and fresh matte, fluxing materials, and cold supplements (such as smelter reverts* and copper scrap) are added to bring the converter charge back to the working level. Blowing is resumed and the converter rotated to the working position. The primary hood is lowered into position over the converter mouth.

The process of charging, blowing, and slag skimming is repeated until a charge of copper sulfide is accumulated in the converter, filling it to the working level. The vessel is then rotated to the blowing position, and the copper blow or finish blow begins. During this stage of the converter cycle, the copper sulfide (white metal) is oxidized, forming SO_2 and copper. Following the copper blow, the converter contains only metallic copper known as blister copper, which is approximately 99 percent pure. The converter is rotated to the pouring or skimming position and the blister copper poured into ladles for transfer to refining facilities. The emptied converter is then charged with fresh matte and fluxing materials, and the converting cycle repeated.

A converter generally makes from one to three cycles in a 24-hour period, with the actual blowing time comprising about 70 to 75 percent of the cycle.[47] The remainder of the cycle is spent in charging and skimming operations, and holding (waiting) due to normal process fluctuations within the smelter. The primary determinant of the time required for a complete cycle is the grade of matte charged to the converter, although the blowing rate is also an important factor. Low-grade mattes, which have a larger percentage of FeS, require longer cycle times than do high-grade mattes. At the ASARCO-El Paso smelter, for example, with a matte grade of 40 percent, the duration of the slag blow has been reported at 5.8 h, while the copper blow required 3.9 h.[48] In contrast, at the White Pine smelter with a matte grade of 65 percent, the duration of the slag and copper blows were

---

*Materials recycled from the smelting process, including accretions, shells from ladles, solidified spillage from material handling, and flue dust.

0.5 h and 3.25 h, respectively.[49] In addition to having a longer cycle time, low grade mattes also generate more heat during the cycle. Hence, smelters desiring to process large quantities of scrap materials in their converters tend to produce lower-grade mattes.

The primary converter hood is designed to be relatively close-fitting to the converter mouth (or to the converter body, depending upon the design). However, some infiltration of air into the offgases is both inevitable and necessary. A tight seal cannot be maintained between the primary hood and the converter because of irregularities (buildups) caused by pouring operations and bath splatter. Offgas leaving the converter mouth typically has temperatures of 1,150° to 1,200° C (2,100° to 2,200° F).[50] Even though many primary hoods are water cooled, some cooling of these gases via infiltration is necessary to prevent damage (i.e., warpage and buckling) to the primary hood, as well as to dampers and flues. The volume of infiltration air typically entering around the hood amounts to 100 to 200 percent of the true converter offgas flow.

The offgas flow rate leaving the primary hood of converters typically ranges from 850 to 1,270 Nm^3/min (30,000 to 45,000 scfm). The average SO_2 concentration in these gases is normally in the range of 4 to 5 percent during the slag blow and 7 to 8 percent during the copper blow.[51] Values of the overall average SO_2 concentration in the offgases (after gas cleaning) from existing domestic converting operations fall in the range of 1.6 to 6.5 percent on a dry basis. The industry-wide average value, as weighted by the respective plant flow rates, is 4.3 percent. New converting operations are capable of producing, after gas cleaning, 5.5 percent SO_2 during the slag blow and 7.9 percent SO_2 during the copper blow, with an overall average of 6.3 percent.*

---

*SO_2 strength for new converting operations are based on theoretical calculations that consider 100 percent dilution of the offgas leaving the converter mouth. The overall average was derived for three operating converters. All values are on a dry basis.

As indicated previously, converting is a batch operation, and up to 30 percent of the cycle time of each converter is spent in charging, skimming, and holding operations (during which essentially no offgas is produced). Each operating converter in a plant may or may not be in the same mode of operation. Obviously, these characteristics of converter operation can cause problems in the emission control system because of the erratic nature of the resulting flow rate and SO_2 concentration in the combined converter offgas stream. Fortunately, however, the scheduling of converter operations can be used to eliminate discontinuities in the SO_2 supply and stabilize (to some extent) the combined offgas flow rate. A detailed analysis of converter scheduling is discussed in Section 4.5.1.

3.2.3.2 Hoboken Converters. An alternative to the traditional Peirce-Smith converter is the newer Hoboken or "siphon" converter, first developed by Metallurgie Hoboken, N. V. in Belgium. The Hoboken-type converter is currently used by one of the domestic smelters.

Although the Hoboken converter is essentially the same as a conventional Peirce-Smith converter, this vessel is fitted with a side flue located at one end of the converter and shaped as an inverted U, as shown in Figure 3-9. The inverted, U-shaped flue, or "siphon," rotates with the converter and is fitted with a cylindrical duct, also rotating with the converter, which leads to a fixed vertical flue. A specially designed seal exists between the rotating duct and the fixed flue. This flue arrangement permits siphoning of the converter gases from the interior of the converter directly to the offgas collection system.

The primary advantage of the Hoboken converter as designed lies in emissions control. By maintaining a slightly negative pressure at the converter mouth, it is possible to minimize or eliminate the escape of SO_2, while maintaining a high SO_2 strength in the offgases. The draft is maintained using variable-speed fans and dampers. With two converters in operation, only one of which is blowing at any time, personnel at Metallurgie Hoboken, N. V. indicate that converter off-gases averaging 8 percent SO_2 can be expected.[52] An additional advantage is

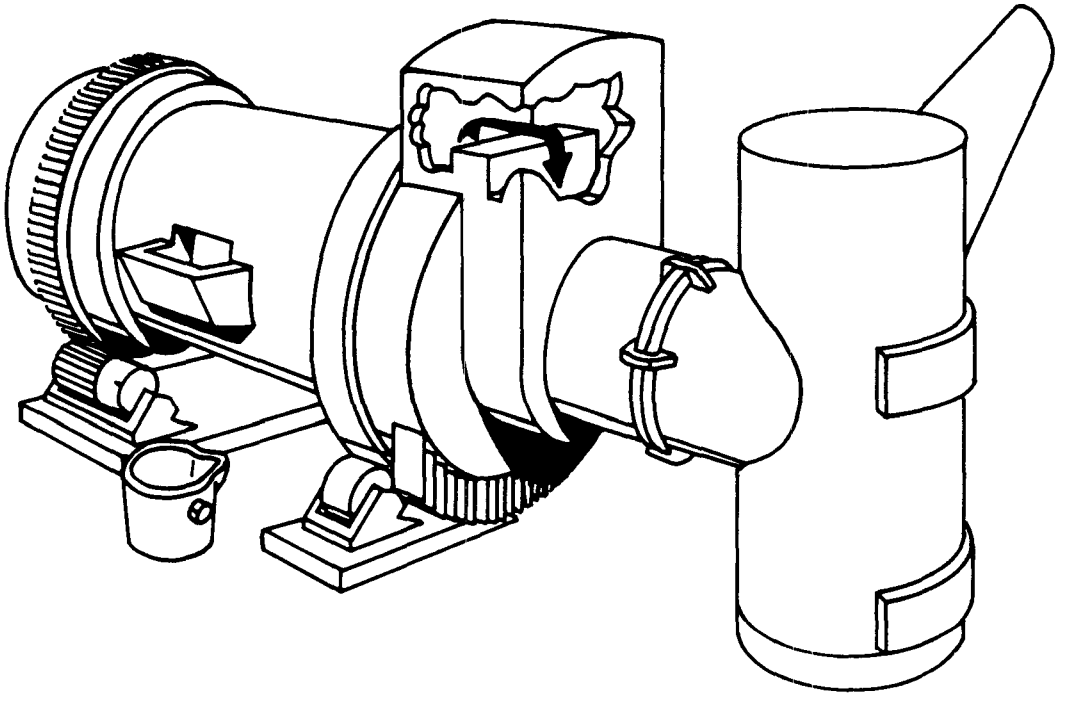

Figure 3-9. Hoboken converter.

that, since the mouth is freely accessible throughout the operations, it is possible to charge large quantities of liquid or solid materials during blowing.[53]

Personnel at Inspiration Consolidated Copper Company, the only domestic smelter using siphon converters, have indicated that these converters have given unsatisfactory performance.[54] Problems result because there is a tendency for molten particles swept from the bath to solidify and accumulate in the siphon area. The result is severe buildups, which plug the gas flow passage and prevent proper draft at the converter mouth.[54] As the buildups accumulate, the converter gases vent increasingly through the converter mouth and not through the siphon. The buildups are responsible for limiting the campaign life (i.e., period of operation before major maintenance) of each converter to approximately 3 months.[55] To alleviate the problem, Inspiration intends to modify the converters by eliminating the siphon system.

3.2.4 Fire Refining

Fire refining operations serve to eliminate the gross impurities from blister copper. The resulting product, anode copper, is further refined electrolytically to remove remaining impurities and recover gold and silver.

Although the majority of domestic copper produced by pyrometallurgical means is destined for electrolytic refining, it is not so processed directly because of small quantities of dissolved sulfur and oxygen. Electrolytic refining operations require strong, thin copper anodes with smooth surfaces. Blister copper is not suitable for the production of anodes because, upon cooling, the sulfur and oxygen combine to form SO_2, which leads to gas bubbles throughout the metal and "blisters" on the surface.[56]

Fire refining is performed in rotary-type refining furnaces resembling Peirce-Smith converters or in small hearth-type furnaces. Among the domestic industry, the rotary-type furnace predominates. Blister copper is charged to the vessel directly from the converters. Dimensions of the rotary-type refining furnaces vary; however, a

4- by 9-m (13- by 30-ft) furnace may be regarded as typical.[57] The hearth-type furnaces are used in limited cases where the melting of solid charge is practiced.

Fire-refining operations are accomplished by blowing gases (air, natural gas) through the molten metal. Gas flow rates are relatively low to accurately control the metal composition.[58] In contrast to converters, very little heat is provided by the refining reactions; hence some combustion of fuel is necessary to maintain the temperature of the furnace. The temperature of operation is about 1,130° to 1,150° C (2,070° to 2,100° F), which provides sufficient superheat for the subsequent casting of anodes.[59]

Blister copper from converting contains about 0.05 percent dissolved sulfur and 0.5 percent dissolved oxygen.[56] The removal of sulfur and oxygen is accomplished in two stages. During the first or oxidation stage, air is blown through the blister copper to remove the sulfur (as SO_2). The duration of the oxidation cycle is variable, depending upon factors such as the mass and sulfur content of the charge and the blowing rate. Times have been reported at 0.5 to 1.0 hour,[60] and at 3 to 4 hours.[61] The oxidation step is completed when the sulfur content drops to a level of 0.001 to 0.003 percent.[60] This stage may be ended with the skimming of a small amount of slag from the bath surface.

The second or "poling" stage serves to remove oxygen, which has dissolved in the copper both during converting and during the oxidation stage of refining. Oxygen is removed by blowing natural gas, reformed natural gas, or propane through the molten metal. The duration of the poling stage is variable, having been reported at 2.5 to 3 hours.[61] Gas addition to the bath is stopped when the oxygen level in the anode copper is 0.05 to 0.2 percent, which gives a "flat set" to the anodes when they are cast.[60] At this point, the surface of the batch may be covered with a layer of low-sulfur coke to prevent reoxidation of the copper. The poling stage is so-called because of the older practice of lowering green wood poles into the molten bath to supply the necessary reductants. Poling by this means is still practiced at the ASARCO-Tacoma and White Pine smelters.

The removal of some metallic impurities may also be achieved during fire refining. In general, oxidation and slagging techniques are employed.[62] The concentration of lead may be reduced by the addition of silica to the bath just before the end of the oxidation stage.[61] Continued blowing of air effects the removal of lead into the slag. The addition of soda ash and lime to the charge at the end of the oxidation stage is used to slag off arsenic and antimony. With successive treatments, it has been reported that almost complete removal of these two elements can be achieved.[62] ASARCO has indicated,[63] however, that essentially complete removal cannot be achieved in a practical sense because (1) successive treatments are quite time consuming and may be cost prohibited and (2) soda ash is corrosive to anode furnace refractories.

It should be noted that some metallic impurities have a very high affinity for blister copper. For these elements, fire refining is virtually ineffective for reducing their concentration. A notable example is the element bismuth.[64] Fortunately, however, substantial elimination of bismuth can be achieved during the slag blow of converting. (Impurity elimination during converting operations is discussed in Section 3.5.2.3.)

3.2.5 Continuous Smelting Systems

In recent years, a number of foreign companies have initiated development of continuous smelting systems. In such systems, a steady stream of blister copper is produced on an uninterrupted basis from a steady feed of ore concentrates. Continuous smelting systems are designed to make maximal use of the inherent energy of the sulfide charge, and hence are generally among the most energy-efficient of the major pyrometallurgical processes. The most notable of these smelting technologies are the Noranda process and the Mitsubishi process.

3.2.5.1 Noranda Process

The Noranda process was developed by Noranda Mines, Ltd., of Canada. As originally designed, the process allowed the production of blister copper on a continuous basis in a single vessel, by effectively combining roasting, smelting, and converting into one operation.

Metallurgical problems, however, led to the operation of these reactors for the production of copper matte. Presently, two installations operate Noranda reactors: the Noranda Mines, Ltd., Horne smelter and the Kennecott Garfield smelter in Garfield, Utah. Both of these installations produce a high grade (70 to 75 percent copper) matte,[65] which is subsequently processed in the converters.

Noranda reactors, as shown in Figure 3-10, are cylindrical, refractory-lined vessels 21 m (70 ft) long and 5 m (16 ft) in diameter that closely resemble Peirce-Smith converters. Oxygen-enriched air is introduced into the molten bath through a row of tuyeres along one side of the vessel. The vessel may be rotated about its horizontal axis to bring the tuyeres out of the bath for servicing. At the Kennecott Garfield smelter, feed is introduced continuously to the vessel through an opening at one end using a belt-driven slinger. Matte is tapped intermittently through ports located on the cylindrical side of the vessel. Slag is tapped intermittently from the end of the vessel opposite the charging end. Offgases from the process contain 16 to 20 percent SO_2[66] and exit from the mouth in the top. As the mouth is used only for the removal of gas from the reactor (hence not for charging and tapping), it can be closely hooded to prevent the escape of SO_2 to the surroundings and reduce the influx of outside air into the gas stream.

As in flash smelting, the Noranda process takes advantage of the heat energy available from the charge itself. Air blown through the tuyeres creates a turbulent, well-mixed zone in which iron sulfide (FeS) is oxidized with the release of heat. The remaining thermal energy required is supplied by coal, which is mixed with the ore concentrates, and by two oil burners, one positioned at each end of the vessel.

Due to the turbulence within the bath, slags from the furnace contain high copper concentrations (3 to 8 percent)[66] and must be further processed for copper recovery. Slags are cooled, ground, and processed by froth flotation to produce a slag concentrate, which is charged to the reactors, and a tailings product containing 0.4 percent copper,[66] which is discarded.

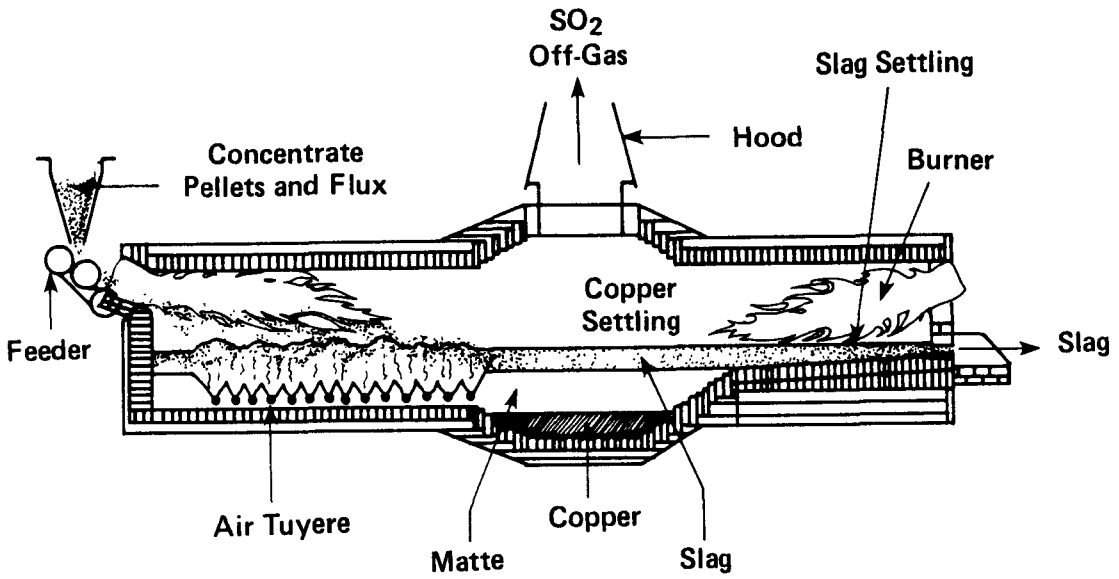

Figure 3-10. Noranda continuous smelting.

The Noranda process is not used as originally designed to produce blister copper directly because of problems encountered with impurity elimination.[65 67] Impurity elimination in the Noranda process is discussed in Section 3.5.

3.2.5.2 Mitsubishi Process. The Mitsubishi smelting process was developed by Mitsubishi Metal Corporation of Japan. Early development work was carried out in a pilot plant, constructed in 1968, processing 65 Mg/day (72 tons/day) of charge. Subsequent tests of the process were made with a prototype scale unit, completed in 1971, processing 150 Mg/day (165 tons/day) of charge.[68] Presently, Mitsubishi operates a commercial plant rated at 650 Mg/day (720 tons/day) feed capacity, which went into operation in 1974 at its Naoshima smelter in Japan.[69] A second full-scale production plant is in operation at the Texasgulf Canada smelter in Timmins, Ontario.[70]

As shown in Figure 3-11, the Mitsubishi process employs three furnaces interconnected by a continuous flow of matte and slag. The furnaces are connected in cascade fashion so that matte and slag flow by gravity between them. In the first or smelting furnace, dried copper concentrates are smelted and oxidized to form a high grade (60 to 65 percent Cu) matte. A mixture of slag and matte flows from the smelting furnace to an electric settling furnace, in which the matte and slag are separated. Slag (0.5 percent copper) flows from the electric furnace, and is discarded. Matte from the electric furnace flows into the final or converting furnace, where it is continuously oxidized to blister copper. Due to its high copper content (15 percent Cu) the slag from this furnace is solidified and recycled to the smelting furnace for copper recovery.

Oxygen-enriched air is introduced into the smelting and converting furnaces via vertical, stainless steel lances, which are installed in the roof of each furnace.

A major advantage of the Mitsubishi process over other processes is that materials handling operations are greatly reduced, since most matte and slag transfer is by gravity flow. (The water-granulated slag from the converting furnace is recycled to the smelting furnace

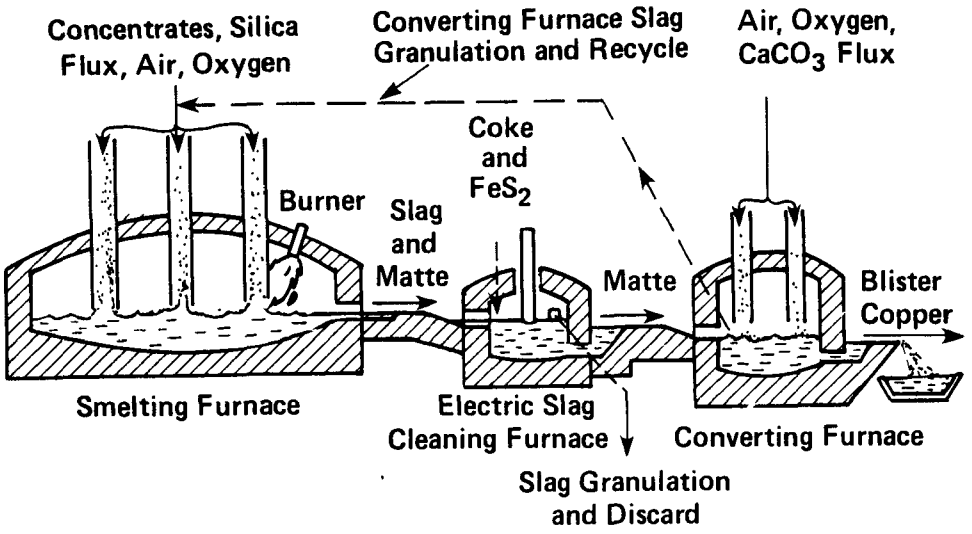

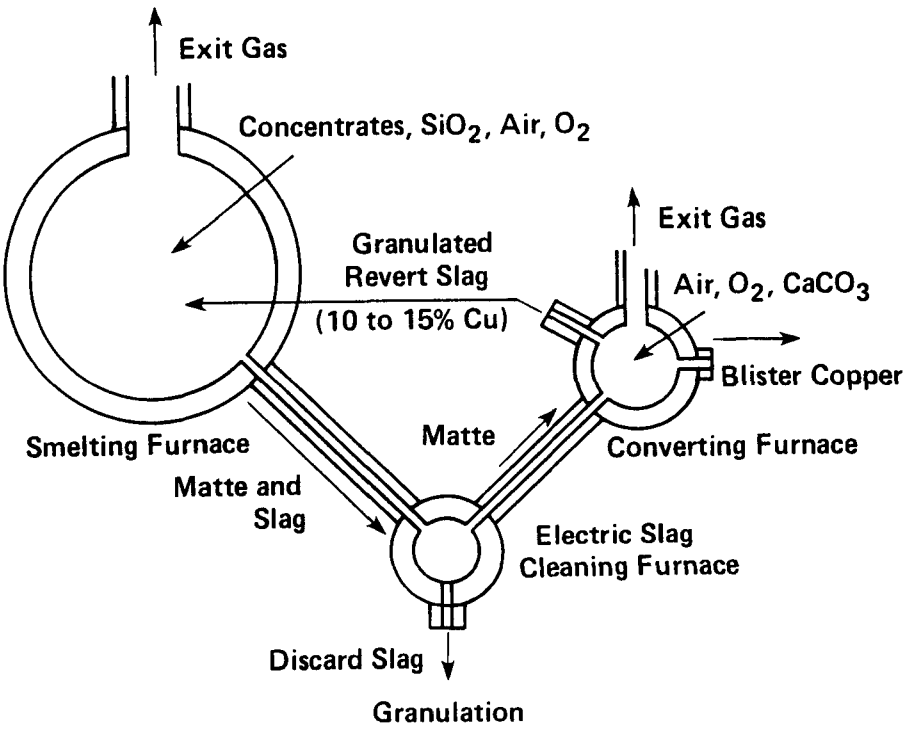

Figure 3-11. Mitsubishi continuous smelting.

by means of a bucket conveyor system.) Also, because the process makes use of the inherent energy content of the sulfide charge, its energy requirement is among the lowest of the major pyrometallurgical processes.

A possible disadvantage to this process is that, if the feed contains high levels of certain impurities, adequate impurity elimination may not be achievable. This point is discussed further in Section 3.5.

3.3 EMISSIONS FROM PRIMARY COPPER SMELTERS

3.3.1 General

SO_2 and particulate emissions from primary copper smelters can be categorized as either process or fugitive emissions. Process emissions include primary offgas emissions from roasting, smelting, and converting. Fugitive emissions include those escaping from material transfer operations, leakage from process vessels, and leakage from primary offgas flues. Fugitive emissions may be considered low-level emissions because they usually escape at or near ground level. The process emissions are typically discharged through a tall stack.

3.3.2 Process Emissions

If uncontrolled, process sources account for the majority of primary copper smelter emissions. Uncontrolled emissions factors for SO_2 and particulate matter from roasting, smelting, and converting operations are shown in Table 3-3.

Under the existing new source performance standards (NSPS) regulation, control equivalent to that attained using double-contact acid plants is required for new roasters, converters, and smelting furnaces processing a charge containing a low level of volatile impurities. At this level of control, SO_2 emissions from these sources are reduced by approximately 98.5 percent, while particulate emissions are reduced by greater than 99 percent. However, reverberatory furnaces processing a charge containing a high level of volatile impurities are not subject to control of SO_2 or particulate matter. As noted in Table 3-3, these furnaces represent a significant fraction of process emissions from copper smelters.

TABLE 3-3. EMISSIONS FACTORS FOR UNCONTROLLED MAJOR PROCESS SOURCES

Operation type	Mass SO_2 per unit of blister copper[a]		Mass particulate per unit of blister copper[b]	
	kg/Mg	lb/ton	kg/Mg	lb/ton
Roasting	780	1,560	90	180
Smelting (reverberatory furnace)	460	920	40	80
Converting	1,160	2,320	120	240

[a]Based on an average of sulfur elimination data for the ASARCO-El Paso, ASARCO-Hayden, ASARCO-Tacoma, and Phelps Dodge-Douglas smelters. All of these plants use multihearth roasters.

[b]Adapted from Reference 71 and assumes feed contains 25 percent copper.

3.3.3 Fugitive Emissions

Potential sources of fugitive emissions of particulate matter and, in most cases, SO_2 are listed in Table 3-4 and shown in Figure 3-12. The actual quantities of emissions from these sources depend to some extent on the type and condition of the equipment and the operating techniques employed by the smelter. Although emissions from many of the sources are released into a building, they are ultimately discharged to the outside. Each of the potential sources is discussed briefly here. The discussion applies to sources without fugitive emissions capture systems (hooding). It should be noted that a number of judgments are presented, based on U.S. Environmental Protection Agency (EPA) inspections and visible observations, where mass emissions data are not available.

3.3.3.1 Roasters.

3.3.3.1.1 Charging. Fugitive emissions from the charging of multihearth roasters are generally minimal. Particulate emissions are slight because of the high moisture content (5 to 15 percent) of the feed. The escape of SO_2-laden gases from the interior of the roaster through the annular charging port is effectively prevented by the flow of material cascading from the uppermost drying hearth to the first roasting hearth and by the operation of the roaster under negative pressure.

As with multihearth roasters, fugitive particulate emissions from the charging of fluid-bed roasters are slight--both because of the suppressive effect of the moisture contained in the feed materials and because charging systems are generally totally enclosed.

3.3.3.1.2. Leakage. Fugitive emissions from multihearth roasters may be emitted from leaks around the doors located at each one of the hearth levels, from holes in the actual shell of the roaster, or from leaks around the central drive shaft. Under normal operation, these emissions are minimized by operating the roasters under a slight negative pressure and by good maintenance practices.

The fluid-bed roaster is essentially a vertical cylinder of steel plate lined with insulation and fire bricks. Because it operates

TABLE 3-4. POTENTIAL SOURCES OF FUGITIVE EMISSIONS

Roaster
Charging
Leakage
Hot calcine discharge and transfer
Smelting furnace
Charging
Leakage
Matte tapping
Slag tapping
Converter slag return
Converters
Charging (matte, reverts, flux, lead smelter by-products, cold dope or other)
Blowing (primary hood leaks)
Skimming
Holding
Pouring of slag and blister
Converter leaks
Anode furnace
Charging
Blowing (oxidation and poling modes)
Holding
Pouring
Miscellaneous
Dust handling and transfer
Ladles
Slag dumping

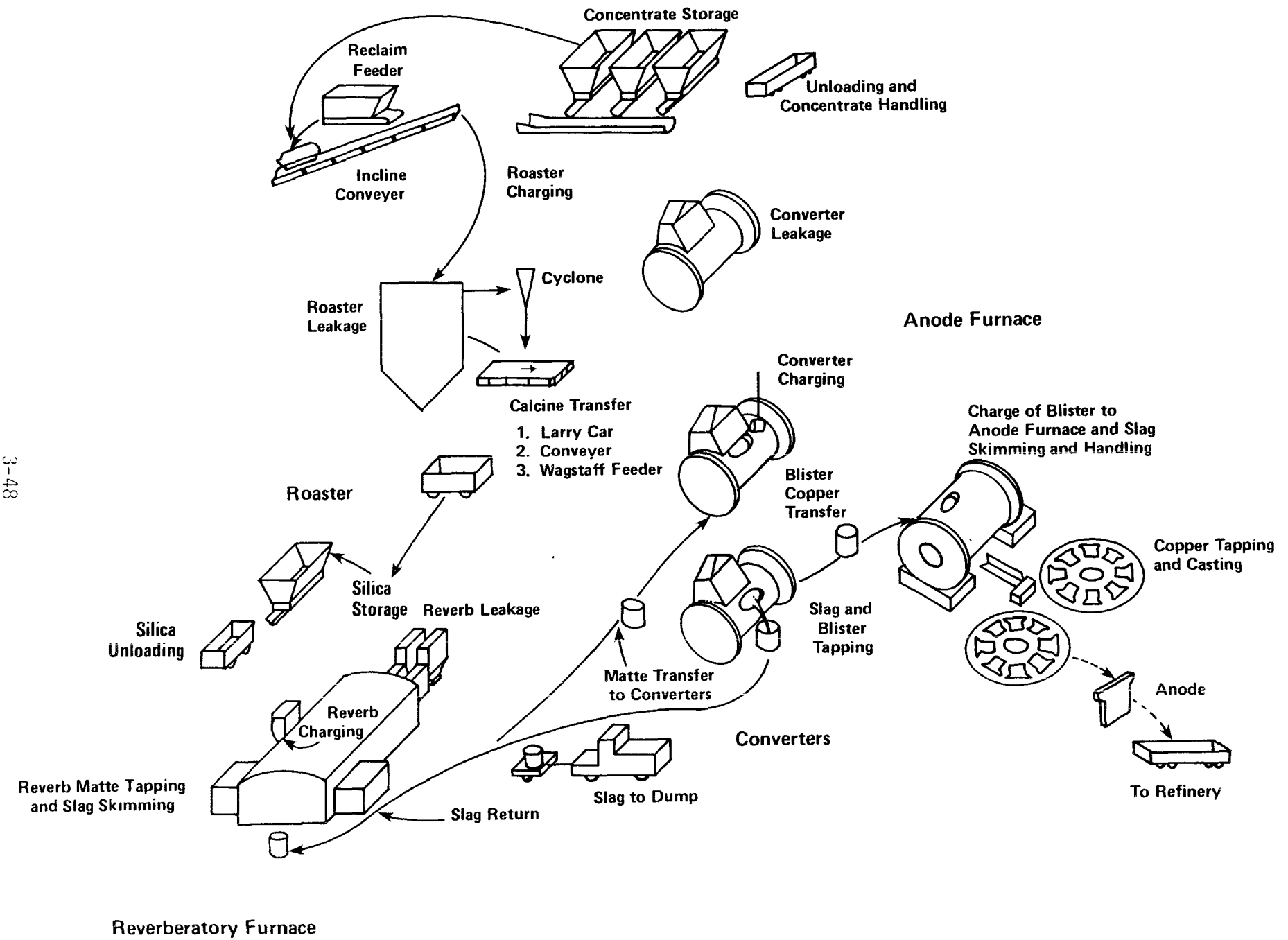

Figure 3-12. Fugitive emissions sources for primary copper smelters.

under a positive pressure, the unit is designed for containment of the material, and leakage from the vessel proper is usually negligible with proper maintenance. Because of their high SO_2 concentration, gas leaks are readily detected if present.

Calcine is discharged from a fluid-bed roaster primarily by entrainment in the gas exiting the top of the roaster. The material is collected from the gas stream using a series of cyclones. The gas-handling system is an integral part of the roaster. As the entire system is under positive pressure, it should therefore be airtight and free of leaks. However, as hot calcine is both corrosive and abrasive, flue leakage can be a problem, resulting in some fugitive emissions if proper maintenance is not applied. OSHA has indicated that substantial leakage occurs from existing units at the expansion joints and cyclones.[72]

3.3.3.1.3 Hot calcine discharge and transfer. Fugitive emissions may be generated during the discharge and transfer of hot calcine from the roaster to the smelting furnace. Smelters with multihearth roasters usually use larry cars (small rail cars) to transport calcines to the furnace. When the calcine is dropped from the hopper located beneath the roaster into the larry car through the feed opening, large quantities of dust are generated as a result of material movement and pressure changes within the car.[73] Fugitive emissions can also occur during the transportation of the roaster calcines to the smelting furnace. In the case of larry cars, the feed opening is usually covered to minimize this effect.[73]

Calcine collected from the cyclones associated with a fluid-bed roaster is generally fed by a closed system to a calcine storage bin located in close proximity to the smelting furnace. Again, because this system is totally enclosed, fugitive emissions are generally negligible.

3.3.3.2 Smelting Furnaces. As mentioned previously, four basic types of smelting furnaces are used by the industry: reverberatory, electric, flash, and Noranda furnaces. The following is a discussion of the fugitive emission sources associated with these furnaces.

3.3.3.2.1 Charging. Fugitive emissions associated with the charging of smelting furnaces may be substantial, depending upon the type of furnace being used, the nature of feed materials charged, and the charging technique.

When green or calcine charge contacts the molten furnace bath, rapid reactions with the bath lead to gas formation. This in turn can cause positive pressure surges within the furnace, which can result in the release of fugitive emissions through all of the furnace openings. In the case of side-charged furnaces using green feed, there is the added possibility of a portion of the charge bank caving in or sloughing into the molten bath, which results in a similar rapid gas release. In such cases, the pressure surge can be great enough to damage the furnace arch. Generally, however, it is believed that fugitive emissions associated with charging calcine feed are greater than those from charging green feed, because of the comparatively dusty and free-flowing nature of hot calcine.

With reverberatory furnaces, the method of charging can vary depending upon whether green feed or calcine feed is used. Green-feed furnaces are most commonly charged using drop pipes that penetrate the furnace roof. Green feed can also be charged through openings in the furnace sidewalls using charge slingers (high-speed conveyors). With the latter system, it is possible for fugitive emissions to be released as the charge is thrown through the opening.

Reverberatory furnaces processing calcine feed can be charged by (1) fixed or retractable Wagstaff guns, which penetrate the furnace sidewalls; (2) drag-chain conveyors in conjunction with fettling pipes along the sidewalls; and (3) feed pipes penetrating the arch of the furnace near the centerline.

Electric furnaces are usually charged continuously through feed pipes in the roof. The charge usually consists of calcine or dried concentrates. Pressure surges can occur during charging in electric furnaces as well as in reverberatory furnaces; however, generally fewer openings are present on electric furnaces.

The feed to flash furnaces is usually from a concentrate dryer. Dried concentrates from the dryer are discharged to the feed storage bin by a closed system. The feed is then conveyed to the flash furnace using variable speed drag conveyors or screw conveyors where it is injected with air into the furnace. Because the system is designed to be gas tight, fugitive emissions are not normally emitted.

Noranda reactors are charged through an opening in one end by means of a charge slinger (high speed conveyor). Some fugitive emissions are emitted as the charge is thrown through the opening,[67] although the amount is generally small since the charge is moist.

3.3.3.2.2 Leakage. Fugitive emissions, especially SO_2, can result from leakage points on most types of smelting furnaces when the pressure inside exceeds atmospheric pressure. Leakage points include thermal expansion spaces between bricks and all other furnace openings.

Reverberatory furnaces have perhaps the greatest potential for leakage if adequate draft is not maintained on these furnaces. However, the draft cannot be excessive because outside air causes the furnace temperature to drop. In addition to thermal expansion spaces and charging ports, openings exist for admitting secondary combustion air to the burners. On those furnaces having a roof constructed of silica brick, ports are present along the furnace length to allow silica slurry to be sprayed onto the arch for maintenance.

Electric furnaces generally do not have as many openings as do reverberatory furnaces. Secondary air openings are not necessary because burners are not required. Also, arch maintenance ports like those used on reverberatory furnaces are not necessary because the roof temperature is usually not a problem. Potential leakage points on electric furnaces are the expansion spaces, spaces around the seals where the electrodes enter the furnace, and charging ports.

Inco flash furnaces are totally encased in a mild steel shell.[74] Hence, fugitive emissions associated with furnace leakage are unlikely.

Outukompu flash furnaces are also steel encased, except for their roofs. Potential leakage points other than expansion cracks include spaces around the plug in the uptake ceiling and the damper slot between the furnace and the waste heat boiler.

With Noranda reactors, which are encased in a steel shell, leakage can occur only through openings such as the charge port or around the hood over the offtake. However, emissions are slight if adequate draft is maintained on the primary offtake hood.

3.3.3.2.3 Matte tapping. Matte tapping is a source of fugitive SO_2 and particulate emissions from smelting furnaces. Smelting furnaces typically have from two to six matte-tapping ports with associated launders. The launder directs the flowing matte to a location where it is discharged into a ladle. Normally, only one tap port is used at a time, although two ports may be used concurrently. Typically, a single matte-tapping operation lasts from 5 to 10 minutes. Matte-tapping frequency varies with furnace capacity. Matte is tapped from reverberatory furnaces with a frequency of from five to eight times per 8-hour shift. The Outokumpu flash furnace at the Phelps Dodge-Hidalgo smelter is tapped with a frequency of from 10 to 20 times per 8-hour shift.[75] During matte tapping, fugitive emissions are visible at the tap port, along the launder, and at the launder-to-ladle discharge point.

3.3.3.2.4 Slag skimming. Slag skimming is another source of fugitive emissions from smelting furnaces. Smelting furnaces typically have from one to three slag-skimming ports. As many as two may be used concurrently. A single slag-skimming operation usually lasts from 10 to 20 minutes. Slag is skimmed with a frequency of from 10 to 25 times per 8-hour shift. As with matte tapping, emissions are evident at the skimming port, along the launder, and at the launder-to-ladle discharge point.

3.3.3.2.5 Converter slag return. Reverberatory, electric, and Inco flash furnaces generally have a single converter slag return port in the furnace wall. Converter slag is returned to the furnace using a launder or chute leading to the opening. Fugitive emissions result as the slag flows from the ladle to the furnace port. Also, some emissions may escape from within the furnace through the open port. These emissions stem from pressure surges within the furnace, which are caused by chemical reactions between the converter slag and the bath.

In Outokumpu flash and Noranda furnaces, converter slag is usually processed separately in slag cleaning furnaces or flotation plants.

3.3.3.3 Slag-Cleaning Furnaces.

Slag-cleaning furnaces are frequently used in conjunction with flash furnaces for recovering matte entrained in the smelting furnace and converter slags. Slag-cleaning furnaces are most commonly small, low-powered electric furnaces. Potential fugitive emission points on these furnaces are the same as those on smelting furnaces.

The charging of molten slag to the slag-cleaning furnace from the smelting furnace is performed with the same frequency as this slag is skimmed from the smelting furnace. At the Phelps Dodge-Hidalgo smelter, slag from the flash furnace is transferred directly into the slag-cleaning furnace via a launder leading to an open port in the wall of the slag-cleaning furnace. Fugitive emissions can be observed during the entire operation.

Fugitive emissions from furnace leakage can occur whenever insufficient draft is maintained. Leakage occurs primarily through the furnace roof, because of the presence of expansion cracks and spaces around the electrodes.

Matte is tapped from slag-cleaning furnaces in the same fashion as from smelting furnaces. However, the frequency of tapping, at about three times per 8-hour shift,[75] is lower because only a small fraction of the matte produced in the smelter is entrained in slag. The grade of matte from a slag-cleaning furnace is slightly higher than that produced in the smelting furnace, because some additional sulfur is removed in the slag-cleaning furnace. Hence, fugitive emissions per unit of matte tapped from slag-cleaning furnaces would be expected to be slightly less than those liberated (per unit of matte) from matte produced in a smelting furnace.

Slag skimming, like matte tapping, is also performed in much the same fashion on slag-cleaning furnaces as on smelting furnaces. Hence, fugitive emissions are evident at the skimming port, along the launder, and at the launder-to-ladle discharge point. The quantity of slag

skimmed from slag-cleaning furnaces is approximately the same as that skimmed from smelting furnaces, because only a comparatively small amount of matte settles from the slag charged.

Converter slag is returned to slag-cleaning furnaces in the same manner as it is returned to smelting furnaces. Fugitive emissions result as the slag flows down the chute and into the furnace. The frequency of this operation on slag-cleaning furnaces would be somewhat lower, as compared its frequency on reverberatory furnaces, however. This decrease results from the higher matte grade (and consequent decrease in converter slag production) in most smelters employing slag-cleaning furnaces.

3.3.3.4 Converters.

The various stages of converter operation are charging, blowing, slag skimming, and blister pouring. Each of these operations is a potential source of fugitive emissions.

3.3.3.4.1 Charging. During charging, the converter is rotated until its mouth is approximately 45 degrees from the vertical, and the primary hood is raised. Emissions result for an instant as the converter is rotated because of the need to maintain blowing air through the tuyere lines until the tuyeres are above the level of the bath to prevent plugging. An overhead crane lifts the ladle above the mouth of the converter and pours the charge (matte or revert materials) into the converter by tilting the ladle. During the pour, visible emissions are heavy but of relatively short duration (15 to 20 seconds). When charging is completed, blowing air through the tuyeres is resumed, which results in a burst of emissions while the vessel is rotated to a vertical position. Once in place, the primary hood is then lowered into position.

3.3.3.4.2 Blowing. Most domestic smelters have attempted to provide relatively close-fitting primary hoods over the converter mouth to contain and capture the offgases generated during blowing operations. However, these hoods do not completely seal the opening because of irregularities around the mouth. The irregularities are caused by accretions formed by pouring operations and by bath splatter

during blowing. Fugitive emissions escape from these openings. Generally, the emissions are proportional to the blowing rate and the condition of the primary hood.

3.3.3.4.3 Skimming. During skimming operations, the mouth of the converter is rotated to a position between 65 and 85 degrees from the vertical, depending upon the bath level. Some emissions occur during the brief roll-out period because the blowing air to the tuyeres is maintained until they are above the bath level. Slag is skimmed from the converter mouth into a slag ladle. Fugitive emissions are visible during the entire skimming operation, which typically lasts from 2 to 3 minutes. Although the primary hood is not necessarily retracted during this operation, it is usually isolated by dampers from the main duct system to prevent dilution air from mixing with the SO_2 gases being collected from other blowing converters. At the completion of the skim, blowing is resumed, and the converter is rotated back to the upright position. Once in place, the primary hood is lowered.

3.3.3.4.4 Pouring. During blister copper pouring operations, the converter is rotated downward until the mouth reaches a position approximately 90 to 125 degrees from the vertical, depending upon the volume of blister copper within the converter. Again, emissions are discharged briefly during the roll-out, because blowing air is maintained until the tuyeres are above the liquid level. Steady fugitive emissions are observed as the copper is poured into the ladle. After its contents are emptied, the converter is rotated upward until the mouth reaches a position approximately 45 degrees from the vertical to await a new matte charge and the start of a new cycle.

3.3.3.4.5 Holding. At times during normal smelting operations, slag or blister copper cannot be transferred immediately to the ladles. This condition may occur for several reasons, including insufficient matte in the smelting furnace, the unavailability of a crane, and others. Under these conditions the converter is rolled out (rotated) about 30 to 45 degrees to raise the tuyeres above the bath. An

auxiliary burner may be fired through the mouth to keep the bath hot. While in the holding mode, fugitive emissions from the molten bath escape from the mouth into the converter building.

3.3.3.4.6 Converter leaks. Since the ends of most Peirce-Smith converters are joined by bolts and springs, they occasionally leak at the end joint. When this leakage is below the molten material surface, it is usually repaired rapidly to prevent major erosion. However, in cases where it occurs above the bath surface, it may not be repaired in a timely fashion. Thus, fugitive emissions may occur at this point.

3.3.3.5 Anode Furnaces. Refining of blister copper to anode copper is performed in either rotary or hearth-type furnaces. Emissions from these furnaces occur during all phases of operation: charging, oxidizing, poling, skimming, holding, and pouring. In the hearth-type furnaces, which are used at the ASARCO-Tacoma and Kennecott-Hurley smelters, the primary offgases generated during the actual refining operation (oxidation and reduction blows) are siphoned through a furnace offtake and vented through a stack. In the case of the more conventional rotary-type refining furnaces, which are similar to Peirce-Smith converters, emissions during blowing operations vent through the open mouth of the vessel.

3.3.3.6 Miscellaneous Sources.

3.3.3.6.1 Dust handling and transfer.[76] Dust-handling and transfer operations can generate fugitive emissions if carelessly performed. However, most smelters take precautions to minimize fugitive emissions from dust handling and transfer. Dust transfer from control devices to storage facilities is usually performed by covered conveyors. Dust transfer from storage bins is usually made through dust-tight connections to surface transportation units such as tank trucks and dumpsters. Cleaning and unloading of dust from flues and settling chambers is performed by enclosed conveyors that feed into hoppers provided at spaced intervals underneath the flues and settling chambers. Both screw- and drag-type conveyors are used. These flue dusts are

usually treated in a pugmill or pelletizing disc where moisture is added. The wet dust is then transferred to a bedding area, blended with other feed constituents, and recycled. Dust from waste heat boilers and crossover flues is usually removed by manual methods, which, if properly implemented, result in minimal fugitive emissions.

3.3.3.6.2 Ladles. Visible emissions can be observed from ladles containing molten materials (matte, slag, or blister copper) as they are transported between process stages within the smelter. Emissions from a particular ladle are generally of short duration because the time required for material transport is usually short. Normal process fluctuations may require that ladles containing matte, slag, or blister copper be temporarily set aside until needed. The emissions from fuming are still short-lived, however, since the exposed surface of the material cools rapidly, forming a solidified layer that greatly limits fugitive emissions.

3.3.3.6.3 Slag dumping.[77] Smelting furnace slag is disposed of by water granulation or by transport in the molten state for dumping a short distance from the smelter. Slag dumping is the more widely used method. The slag is transported to the dump site by train or slag hauler (Kress hauler). The slag train is usually comprised of a number of slag pots or ladles on flat cars. Solidification at the surface of the slag in the pots is fairly rapid. Fugitive emissions during transportation to the dumping site are therefore limited. However, during dumping of slag at the dumping site, substantial fugitive emissions, although short in duration (less than 1 minute), can be observed.

3.3.4 Summary of Fugitive Emissions Data

Emissions factors for fugitive SO_2 and particulate matter have been developed[78] for most of the major fugitive emissions sources at primary copper smelters: roaster calcine discharge, matte tapping, slag skimming, converter slag return, converter operations, and anode furnaces. Summaries of these emissions factors are presented in Tables 3-5 and 3-6. There are no known emissions data for sources not included in Tables 3-5 and 3-6.

TABLE 3-5. SUMMARY OF FUGITIVE SO_2 EMISSIONS FACTORS FOR PRIMARY COPPER SMELTING OPERATIONS[79]

Source	SO_2 emission factors: Mass per unit of material processed[a]	Mass per unit of blister copper, kg/Mg (lb/ton): Conventional smelters[b]		New smelters[c]	
Calcine discharge	0.5 kg/Mg of calcine (1.0 lb/ton of calcine)	2.2	(4.4)		
Matte tapping	2.6 kg/Mg of matte (5.2 lb/ton of matte)	7.0	(14.0)	4.0	(8.0)
Slag skimming	0.24 kg/Mg of slag (0.48 lb/ton of slag)	0.6	(1.2)	0.8	(1.6)
Converters[d]					
Blowing segment only	2,198 kg/blowing hour (4,845 lb/blowing hour)	241	(482)	130	(260)
Total converter cycle	2,060 kg/h (4,538 lb/h)	320	(640)	190	(380)
Converter slag return	0.14 kg/Mg of slag return (0.28 lb/ton of slag return)	0.2	(0.4)		
Anode furnace		0.15	(0.30)	0.15	(0.30)

[a]Except for converters where mass emissions per hour are given.

[b]Calcine or "green" feed reverberatory smelters.

[c]Flash furnace or Noranda reactor smelters.

[d]Emissions data pertain to converters with primary hoods only (i.e., no secondary hoods)

TABLE 3-6. SUMMARY OF FUGITIVE PARTICULATE EMISSIONS FACTORS FOR PRIMARY COPPER SMELTING OPERATIONS[80]

Source	Particulate emission factors: Mass per unit of material processed[a]	Mass per unit of blister copper, kg/Mg (lb/ton): Conventional smelters[b]		New smelters[c]	
Calcine discharge	1.2 kg/Mg of calcine (2.4 lb/ton of calcine)	5.2	(10.4)		
Matte tapping	0.13 kg/Mg of matte (0.26 lb/ton of matte)	0.34	(0.68)	0.2	(0.4)
Slag skimming	0.13 kg/Mg of slag (0.20 lb/ton of slag)	0.31	(0.62)	0.4	(0.8)
Converters[d]					
Blowing segment only	61 kg/blowing hour (134 lb/blowing hour)	6.6	(13.2)	4.0	(8.0)
Total converter cycle	69 kg/h (153 lb/h)	10	(20)	7.3	(14.6)
Converter slag return	N/A	N/A		N/A	
Anode furnace		0.95	(1.95)	0.95	(1.95)

[a]Except for converters where mass emissions per hour are given.

[b]Calcine or "green" feed reverberatory smelters.

[c]Flash furnace or Noranda reactor smelters.

[d]Emissions data pertain to converters with primary hoods only (i.e., no secondary hoods).

The emissions factors developed for each source are based primarily on emission tests conducted by EPA at several domestic primary copper smelters. These tests were conducted in flues associated with the local ventilation systems used to capture fugitive emissions from the various sources investigated.

Using the emissions test data obtained and pertinent process information, emissions factors were first computed in terms of mass emissions per unit of material processed by the source.[78] In the case of sources for which more than one data point was available, an arithmetic average was used to compute the emissions factor. Because the capture systems tested were less than 100 percent effective, the emissions factors were adjusted upward based on a subjective estimate of the capture effectiveness of each capture system tested to account for emissions escaping capture. The resultant uncontrolled fugitive emissions factors, expressed in terms of mass emissions per unit of material processed, were then normalized to mass emissions per unit of end product (blister copper) by using representative plant material balances.[78] On this basis, the various fugitive emissions sources are readily comparable as to relative significance.

The normalized emissions factors (mass emissions per unit of blister copper) are distinguished in Tables 3-5 and 3-6 according to smelter type--"conventional" smelters, representing green- and calcine-charged reverberatory furnace operations, and "new" smelters, representing flash furnace and Noranda reactor installations.

Based on the normalized SO_2 emissions factors for conventional smelters presented in Table 3-5, converters* are by far the greatest source of fugitive SO_2 emissions at copper smelters. Fugitive emissions associated with the entire converter cycle are more than 45 times greater than those associated with the other fugitive sources. Converter blowing accounts for the majority of the emissions during the converter cycle. Second to converter emissions in relative significance are fugitive emissions from matte tapping, followed by calcine

---

*Data pertain to converters without secondary hooding.

discharge and slag skimming. Fugitive SO_2 sources having the lowest relative significance among those for which data are available are converter slag return and anode furnaces.

With regard to new smelters, the distribution of fugitive SO_2 emissions among the various sources is similar to that noted for conventional smelters. Fugitive SO_2 emissions from converters are, again, more than 45 times greater than those from the other sources. It is noted that fugitive emissions of SO_2 from most sources at new smelters are lower in magnitude, however, than those from the same sources at conventional smelters. This decrease is due to the higher matte grade produced in Noranda reactors and flash furnaces, which corresponds to increased sulfur elimination in the process offgas stream from these furnaces, and hence a lower availability of sulfur for fugitive emissions.

Based on the normalized particulate matter emissions factors for conventional smelters shown in Table 3-6, converters are the greatest source of fugitive particulates at copper smelters. The blowing phase of the converter cycle contributes the majority of the particulate emissions. Calcine discharge represents another major source of particulates, being approximately half as significant as converters. The other sources--matte tapping, slag skimming, and anode furnaces--are relatively minor by comparison. For the "new" smelters (which do not normally employ roasters), converters are the major source of fugitive particulate matter.

Data are not available to characterize fugitive* emissions during matte tapping, slag skimming, and converter slag return operations on slag-cleaning furnaces. However, fugitive SO_2 and particulate emissions per unit of blister copper can be estimated based on the frequency at which these operations are performed on slag-cleaning and smelting

---

*With regard to process offgas emissions from slag-cleaning furnaces, emissions data supplied by Phelps Dodge Corporation[81] indicate that SO_2 emissions are approximately 3 kg/Mg (6 lb/ton) blister copper, while particulate emissions are between 9.4 and 22.6 kg/Mg (18.7 to 45.3 lb/ton) blister copper.

furnaces. Based on previous discussions of relative frequencies, fugitive SO_2 and particulate emissions from matte tapping on slag-cleaning furnaces would be expected to be no more than about one-third the magnitude of matte-tapping emissions from flash furnaces, while fugitive SO_2 and particulate emissions from slag skimming are expected to be approximately equal to those from the same operation on flash furnaces. Fugitive SO_2 and particulate emissions per unit of blister copper from converter slag return operations on slag-cleaning furnaces are expected to be somewhat less than those from the same operation at reverberatory furnaces.

3.4 EXPANSION OPTIONS FOR EXISTING FACILITIES

Most primary copper smelters have at least one rate-limiting operation or "bottleneck." In most smelters, the bottleneck is the capacity of the smelting furnace(s). If additional throughput is needed from the smelter, additional capacity can be added either through the installation of new process units (i.e., new roasters, smelting furnaces, and converters) or through the expansion of the existing rate-limiting equipment.

In lieu of installing new process technology when additional capacity is needed, the smelting industry, both worldwide and domestic, has traditionally chosen to add capacity by expanding existing equipment. It should be noted that the elimination of a particular bottleneck often creates another bottleneck, which must also be eliminated. For example, if the rate-limiting operation is smelting furnace capacity and the furnace is expanded, additional converters may be required, depending upon the magnitude of the increase in furnace capacity.

Various expansion options available for roasters, smelting furnaces, and converters are discussed below. In general, SO_2 and particulate emissions on an uncontrolled basis increase proportionately to increases in capacity.

3.4.1 Multihearth Roasters

Increasing the capacity of multihearth roasters by increasing their shaft rotation speed has been achieved at the Noranda Smelter in Quebec, Canada.[82] These roasters are not substantially different from

those used at domestic smelters. The Wedge roasters used are 7.60 m (25 ft) in diameter, with an external feed or drying hearth and seven internal hearths. Two air-cooled arms are positioned directly above each hearth, one arm carrying 10 and the other 11 rabble blades. Each roaster is driven by a 15-hp motor belt-connected to a speed reducer. The drive is provided with a shear-pin arrangement to prevent breaking of the arms in case of overload or jamming in the roaster.

Rated at 136 Mg/day (150 tons/day) of concentrate, each roaster is operated with a shaft rotation speed of 0.75 rpm. Roaster throughput was increased to about 295 Mg/day (325 tons/day) after experimental work was done to determine the maximum tonnage of feed that could be accommodated with satisfactory sulfur elimination. At this capacity, the roaster shaft speed was 1.09 rpm.

Increasing the throughput was found to raise the temperatures throughout the roaster, with a maximum of 760° to 820° C (1,400° to 1,500° F) being achieved on the third and fourth hearths. The increased temperatures combined with an increase in gas volume resulted in an accumulation of primarily oxidized pyrite fines on the underside of the second and fourth hearths. This problem was rectified by attaching a plow to the top of the rabble arm on the next lower hearths to mechanically eliminated any buildup.

The experience at Noranda Mines illustrates that increasing the rotation speed of the shaft can result in a significant increase in roaster capacity. Increasing the shaft rotation speed will also decrease the residence time and increase the roaster temperature. Both of these parameters are critical, because they influence the volatilization of impurities and the degree of sulfur elimination achieved. Most domestic smelters use the roaster speed as a means of obtaining a desired degree of sulfur elimination. Hence, it is concluded that changing the shaft rotation speed to increase multihearth roaster capacity would not be a viable expansion option at most domestic smelters.

Physical expansion of multihearth roasters is not considered feasible because of the geometry of these units. It is concluded that no viable expansion options are available for multihearth roasters.

3.4.2 Fluid-Bed Roasters

Major components of fluid-bed roasters include the blower, the roasting vessel, and the calcine recovery system (which may use up to 16 cyclones). The entire system is sized very closely to the rated throughput.[83] It is conceivable to attempt to increase roaster capacity by increasing the capacity of the blower. However, increased throughput might be precluded by (1) excessive wear in the cyclones due to abrasion and (2) the capacity of the calcine recovery system.[83] The potential for these problems indicates that this scheme would have to be evaluated on a case-by-case basis at domestic smelters. Such an evaluation is considered beyond the scope of this analysis.

Oxygen enrichment of the fluidizing air has been used as a means of increasing the capacity of sulfating fluid-bed roasters operated at copper smelters in Australia and Zambia.[83] Such roasters operate under the conditions necessary to produce copper sulfate from the sulfide charge. Based on this experience, oxygen enrichment could potentially be used to increase throughput at domestic units by 20 to 25 percent.[83] However, oxygen enrichment could lead to localized overheating within the bed which causes incipient melting of the feed in some cases.[83] Such melting can lead to bed defluidization and plugged cyclones. Also, it should be noted that this expansion option has not been demonstrated on fluid-bed roasters like those operated by the domestic primary copper industry.[83] For these reasons, it is concluded that oxygen enrichment is not a viable expansion option for fluid-bed roasters in general. Rather, the potential usefulness of this option would have to be determined on a case-by-case basis.

In conclusion, it appears that no viable options are available for increasing the capacity of existing fluid-bed roasters.

3.4.3 Reverberatory Furnaces

A number of options have been used in the past to increase reverberatory furnace capacity, including the conversion from green to calcine charging, the addition of concentrate dryers, physical expansion of the furnace, the elimination of converter slag return to the furnace, and the use of various oxygen-enhancement techniques. Each of these options is discussed below.

3.4.3.1 Conversion from Green to Calcine Charging. Reverberatory furnaces operating on green (unroasted) charge may increase throughput by converting to calcine-charged operation through the addition of roaster capacity. Throughput is increased because less heat per unit of feed is required to smelt hot calcines than cold, moist concentrates. Consequently, at a given level of heat input, a greater tonnage of calcine can be processed in a given period of time. Considerable savings in energy, as well as enhanced sulfur recovery, are also afforded.

In 1969, the Kennecott Corporation modified its smelter at Hayden, Arizona, by adding a Dorr-Oliver fluid-bed roaster.[84] Use of the roaster resulted in a 50-percent increase in reverberatory furnace capacity over that achieved with green-charged operation. The roaster is fed with a mixture of copper concentrates, copper precipitates, and silica flux. The bulk of the roasted calcines is collected from the exhaust gases using eight primary cyclones and eight secondary cyclones. The collected calcine reports to calcine bins on each side of the reverberatory furnace and is fed to the furnace by Wagstaff feeders. During the conversion to calcine-charged operation, the reverberatory furnace was altered by installing water jackets (water-cooled panels) around the furnace perimeter at the slag line. These panels were needed to protect the sidewall refractory from excessive temperatures resulting from the close proximity of the burners. Before the conversion, charge banks of green feed along the sidewalls provided the necessary protection.

A similar conversion to calcine-charged operation performed at the Cities Service Company smelter in Copperhill, Tennessee, in 1961 increased the capacity of a reverberatory furnace by 40 percent.[85] In addition, the conversion enabled the overall smelter sulfur recovery to be increased from 63 to 85 percent because the roaster gases could be processed in a sulfuric acid plant.

The Copperhill fluid-bed roaster, designed by Dorr-Oliver, operates with slurry feed. By changing the percentage of water in the slurry, sulfur elimination in the roaster can be controlled so that the matte

grade from the smelting furnace can be readily varied from 30 to over 50 percent. Calcine is removed from the roaster offgas stream using two primary cyclones and two secondary cyclones and is transferred to a bin. From the roaster discharge bin, calcine is fed intermittently to the reverberatory furnace using a single Wagstaff gun inserted through a sliding door in the side of the furnace.

In this analysis, an increase in throughput of 40 percent is assumed achievable when converting from green- to calcine-charged operation. Based on the practice of Kennecott-Hayden and Cities Service-Copperhill, it is assumed that Wagstaff gun feeders would be used for charging calcine to the furnace in lieu of side-charging of calcines. It is further assumed that smelters making the conversion would install water-cooled panels around the furnace perimeter at the slag line to protect the sidewall refractory from excessive wear.[84 86]

3.4.3.2 Addition of Concentrate Dryers. Reverberatory furnaces charged with green feed may also increase capacity to a limited extent via the addition of dryer capacity. As with the conversion from green to calcine charging, capacity is increased because less thermal energy per unit of charge is required to smelt the dried, heated material. Capacity increases are not as substantial, however, because concentrate dryers do not increase the temperature of the feed material to the same level as does a roaster. Kennecott has indicated that the use of a concentrate dryer purchased for its McGill smelter will increase furnace throughput by approximately 15 percent.[8]

3.4.3.3 Physical Expansion. Physically expanding a reverberatory furnace is considered to be a technically feasible option for increasing capacity. In the early 1970's, ASARCO increased the capacity of a furnace at its Tacoma smelter by 20 percent by increasing the furnace width.[87] It should be noted, however, that the physical expansion of a reverberatory furnace requires an extended furnace shutdown, with possible adverse effects on smelter throughput. Also, this option may not be useful at some smelters because of physical space limitations. For these reasons, and because many industry representatives consider this scheme to be impractical, physical expansion is not considered to be a viable expansion option in this analysis.

- The quantity of sensible heat carried out of the furnace in the combustion gases is decreased.

- The concentration of SO_2 in the furnace offgases is increased. This particular benefit is discussed further in Section 4.4.6.

The net result of these effects is an increase in furnace efficiency, manifested primarily in an increase in the production rate. Other benefits that can result with increased oxygen usage include a decrease in the fuel requirements per unit of charge and a decrease in copper losses in the slag. The latter benefit results from a decrease in slag viscosity, which comes about through the increased slag temperature.*

3.4.3.5.2 Methods of oxygen introduction. Various methods of oxygen introduction into reverberatory furnaces have been used to date.

- Enriching the primary combustion air with oxygen.

- Undershooting the flame with oxygen or oxygen-enriched air.

- Oxygen lancing through the roof.

- Introducing oxygen directly with fuel in roof-mounted oxy-fuel burners.

- Introducing oxygen directly with dried feed in roof-mounted oxy-sprinkle burners.

These schemes are illustrated in Figure 3-13.

The first scheme, oxygen enrichment of the primary combustion air, refers to the addition of oxygen to the air supply of the existing end-type burners. This method, because of its simplicity, requires very little change to the furnace proper.

With the second scheme, undershooting the flame with oxygen or oxygen-enriched air, oxygen lances (typically water-cooled) are retrofitted into the end of the furnace. These lances are typically positioned just below the existing burners.

---

*The decrease in copper loss via decreased slag viscosity could be offset, in some cases, by (1) decreased residence time for settling due to increased throughput and (2) the possibility of higher copper solubilities in slag at higher temperatures.

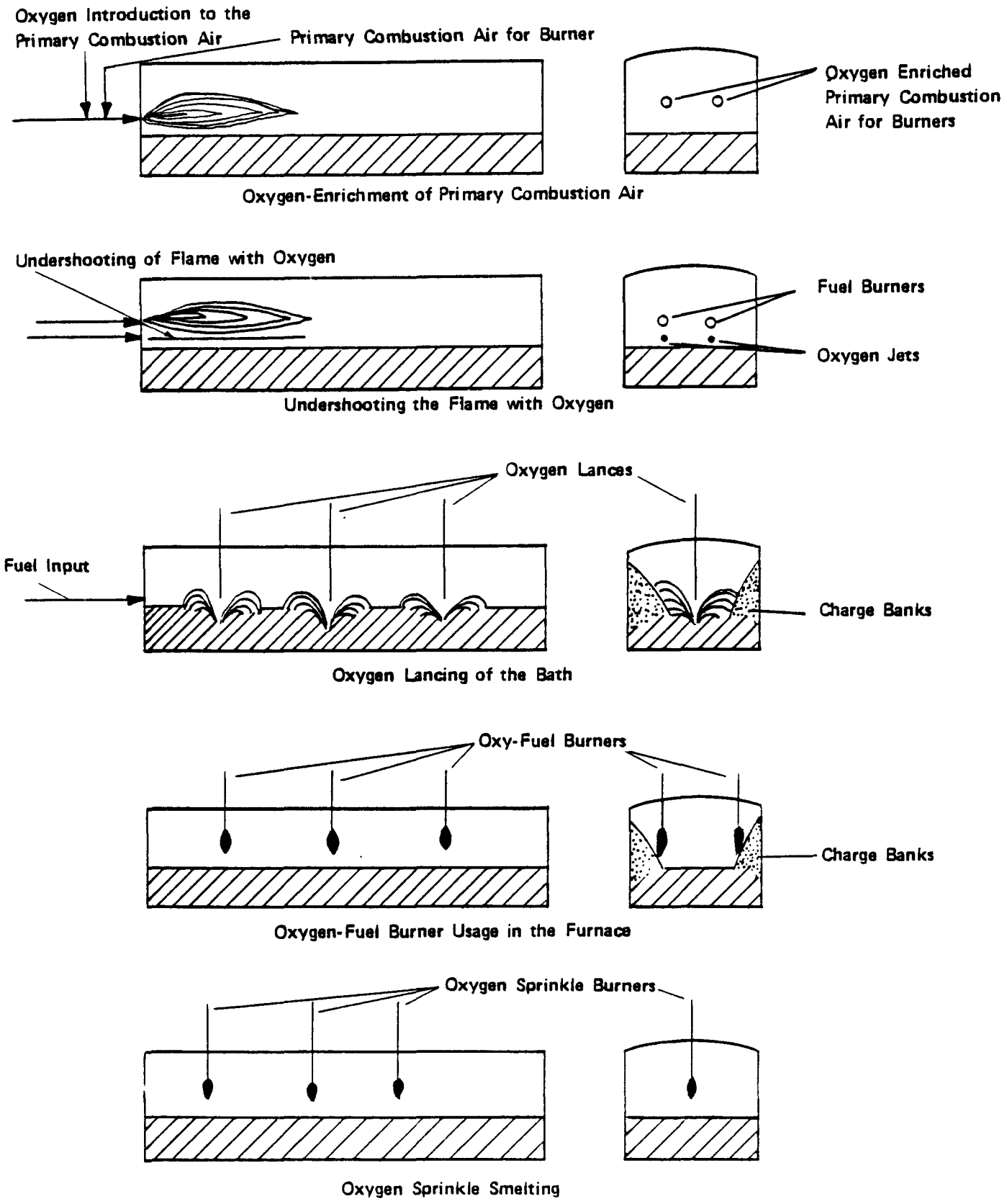

Figure 3-13. Methods of oxygen addition.

Oxygen lancing through the roof refers to the installation of oxygen lances in vertical position on the roof of the furnace. This scheme may use up to three rows of lances, which are spaced regularly down the furnace length. The existing end-burners are used to introduce a fuel-air mixture containing insufficient oxygen for complete fuel combustion.

With the oxy-fuel scheme, fuel is mixed directly with commercial oxygen in burners that are retrofitted onto the furnace roof. These burners are positioned vertically, or nearly so, and are generally spaced regularly down the length of the furnace in two rows. If a sufficient number of oxy-fuel burners are used, the existing end-type burners are not operated.

The oxygen-sprinkle scheme, as developed by Queneau and Schumann,[91] differs from the other schemes in that it operates on the same principle as a flash furnace. Three specially designed burners positioned on the furnace roof are used to introduce and disperse a mixture of primarily dried concentrates and oxygen. A small percentage of ground coal may be mixed with the feed. The heat required for smelting is generated from the flash combustion of the mixture, and the molten droplets fall to the hearth below.

3.4.3.5.3 Operating experience. One of the earliest investigations of the use of oxygen in reverberatory furnaces was described by Saddington et al.[92] of the Inco Copper Cliff smelter in Sudbury, Ontario. Tests were made on a calcine-charged nickel reverberatory furnace. Four water-cooled oxygen lances were installed in the end of the furnace, one below each of the coal burners used to fire the furnace. The lances were angled away from the furnace wall. By introducing the oxygen below the burners, the hottest zone of the flame was at the bottom next to the bath. The first test, made primarily to examine fuel efficiency, indicated a 10-percent increase in throughput could be accompanied by a 19-percent decrease in fuel consumption. In the second test, an increase of 36 percent in throughput was achieved with approximately the same fuel consumption rate as occurred during standard operation (without oxygen enrichment).

Although the oxygen was not added directly to the primary burner air, the "equivalent" levels of oxygen enrichment may nevertheless be defined. These levels were 26 percent and 27 percent during the two tests, respectively.[93]

Achurra et al.[89] have reported tests using oxygen enrichment in a calcine-charged reverberatory furnace at the Caletones smelter. A level of 26 percent oxygen in the primary combustion air yielded a 15-percent increase in capacity and reduced the fuel requirements per unit of charge by 19 percent. Refractory consumption, however, was noted to increase by 20 percent. In later tests, oxygen was injected through the furnace roof using lances to make the temperature distribution uniform within the furnace. An oxygen-enrichment level of 30 percent in this test yielded a 20-percent increase in smelting capacity, accompanied by a 19-percent reduction in the fuel requirement per unit of charge. No mention was made of changes in refractory wear.

Similar investigations have been made for green-charged furnaces. Eastwood et al.[94] have reported tests made at the Rokana smelter in Zambia. In accordance with the practice of Inco, oxygen lances were installed near the coal burners. Furnace throughput was increased by 18 percent. The level of oxygen enrichment was not specified. In a later paper, Gibson[95] reported that the furnace refractory wear had not increased measurably with the use of oxygen enrichment. Furnace operating campaigns were indicated to be longer than 30 months.

Extensive tests of various oxygen enhancement schemes and various levels of enrichment have been made at the Almalyk smelter in the Soviet Union.[96 97] In the work of Kupryakov et al.,[96] oxygen was introduced (1) through water-cooled lances positioned beneath the burners and (2) through the existing burners (primary air enrichment). In the former scheme, an oxygen-enrichment level of 25 percent yielded a production increase of 20 percent and a decrease in the specific fuel requirement of 17 percent, while oxygen enrichment to the 30-percent level provided a production increase of 45 percent, accompanied by a 30-percent reduction in the specific fuel requirement. When oxygen

was mixed directly with the primary burner air, a slightly greater efficiency was noted. With a 25-percent level of enrichment, production was noted to increase by 22 percent, with a 19-percent reduction in the specific fuel requirement. Oxygen enrichment to the 30-percent level yielded a 56-percent increase in capacity and a 36-percent decrease in specific fuel requirements. With regard to roof refractory wear, it was determined that the wear did not differ markedly from conventional operation.

When oxygen-fuel burners are used in the roof of a reverberatory furnace, the efficiency in terms of the heat utilization for smelting is considerably higher than in the schemes discussed previously. Such is the case because, primarily, the heat is directed upon the charge and the heat is transferred to a large extent by convection. Also, the flame temperature is much greater with pure oxygen than with oxygen-enriched air, resulting in a higher thermal driving force. Finally, Goto[98] has pointed out that an additional heat transfer mechanism results with oxygen-fuel burners. CO_2 and H_2O are dissociated when they are formed with oxygen-fuel combustion at temperatures in the 2,000° to 2,900° C (3,600° to 5,300° F) range, thereby absorbing heat. This dissociation heat is released when the gases are cooled sufficiently to permit reformation of the molecules. By applying the flame directly to or near the comparatively cool charge piles in the reverberatory furnace, the reformation heat is applied directly to the material to be smelted.

Extensive investigations on the use of oxy-fuel burners to increase production in a green-charged reverberatory furnace have been made at the Caletones smelter in Chile. As reported by Achurra et al.,[89] throughput has been increased by up to 71 percent when using seven oxy-fuel burners and only one of the three original conventional burners. In this particular test, the fuel requirement per Mg of charge showed a decrease of 40 percent from its value with conventional firing. In later tests, the furnace uptake was rebuilt to correct for a design flaw, and production increases of up to 122 percent were achieved with 12 oxy-fuel burners. This expansion yielded a

56-percent reduction in the specific fuel requirements of the furnace proper. With regard to roof refractory wear, the tests indicated that the refractory consumption per unit of charge was the same or slightly lower than that for a conventional reverberatory furnace.[89 99] More detailed information on the experience at Caletones is summarized in Section 4.4.6.1.1

Extensive experience with oxy-fuel burners on a calcine-charged nickel reverberatory furnace has been accumulated by Inco at its Copper Cliff smelter in Ontario, Canada. Blanco et al.[100] have reported increasing throughput by 45 percent through the use of 10 oxy-fuel burners. The increase in throughput was accompanied by a 55-percent decrease in fuel requirements per unit of charge. Calcine is charged to the furnace along the sidewalls using a drag conveyor/fettling pipe system. As of November 1980, some 13 months of operation were achieved,[100] and the use of oxy-fuel burners continues. Inco has indicated that essentially no change in matte grade occurred with the conversion from conventional firing to full oxy-fuel firing at Copper Cliff.[101] Furthermore, no changes were made in the degree of roast of the feed.[101] The implication is that essentially the same degree of sulfur elimination (per unit of feed) occurred in the furnace during conventional operation and full oxy-fuel firing. More detailed information on Inco's experience with oxy-fuel firing is summarized in Section 4.4.6.1.3.

Small-scale tests of the oxygen-sprinkle smelting scheme have been made by Phelps Dodge Corporation at its Morenci smelter.[102 103] The tests indicated that furnace throughput could be increased by 100 percent, while the total energy requirement per unit of charge could be reduced by two-thirds. No insurmountable problems with the process were identified during the tests. Both the bath temperature and slag copper content were found to be acceptable. The process was noted to have a slightly higher dust generation rate, however, as compared to conventional reverberatory furnace operation. At this point, Phelps Dodge is undecided whether it will adopt oxygen-sprinkle smelting technology.[103] This decision will be made after additional testing in commercial-scale facilities.

3.4.3.5.4 Feasibility of oxy-fuel firing in furnaces charged with Wagstaff guns. No documented experience has been identified with regard to the combination of oxy-fuel firing in calcine-charged reverberatory furnaces employing Wagstaff feeders. ASARCO, while acknowledging that such a combination would not be infeasible, maintains that it would be impractical.[104] Upon charging such a furnace, the calcines would spread more or less uniformly over a significant fraction of the bath. Those calcines beneath the burners and in the immediate vicinity would most likely smelt most rapidly, while those more distant from the burners would be expected to smelt more slowly. According to ASARCO, unless the furnace was charged again when charge beneath the burners had smelted, the bath beneath individual burners could conceivably overheat,[105] resulting in slag foaming, which hinders the separation of matte and slag and increases copper losses. However, ASARCO maintains that charging the furnace before all of the previous charge was smelted would not be practical because the regions with partially smelted charge would hinder the spreading of the new charge, causing charge buildups--especially beneath the Wagstaff guns.[105] If such a condition occurred, the furnace firing rate would have to be reduced to avoid overheating the furnace refractories while the piles of charge were smelted. The implication is that smelting rates would decrease. It has also been indicated that the retrofit of oxy-fuel burners to existing furnaces would hinder the maintenance of roof refractories. Most of the existing calcine-charged furnaces employ sprung-arch roofs of silica brick, which are maintained via silica slurry patching. ASARCO has indicated that difficulties are anticipated with regard to accurately directing the slurry to roof areas in the vicinity of the burners.[104]

ASARCO's comments on slag foaming beneath oxy-fuel burners are based essentially on pilot tests with a 3- by 9-m (10- by 30-ft) dross lead furnace fired with oxy-fuel burners.[104] This furnace does not use Wagstaff feeding. Observations of the test were used to estimate what impacts would result if Wagstaff guns and oxy-fuel burners were used on a calcine-charged copper reverberatory furnace.[104] These

observations[104] were (1) an uneven heat distribution across the bath* and (2) foaming slag beneath the burners due to overheating. Inco's experience with the oxy-fuel-fired nickel reverberatory furnace also indicates that a less uniform distribution of heat across the bath surface results with oxy-fuel firing, as compared to conventional operation[36] (although no bath temperature data are available). However, Inco has indicated that a less uniform heat distribution is not expected to preclude the use of Wagstaff gun charging systems.[36] With regard to slag foaming, Inco has reported that its oxy-fuel fired furnace has been operated at various times without any charge banks (although this operation was not deliberate). Such a condition is similar to that which would occur with Wagstaff charging when the charge beneath the burners is smelted. During these periods at Inco, no slag foaming was observed.[36] Slags from calcine-charged nickel reverberatory furnaces at Inco have been reported as containing (typically) 36.9 percent SiO_2 and 36.9 percent Fe[100] (which corresponds to 47.5 percent FeO). Slags from various calcine-charged copper reverberatory furnaces in use worldwide have been reported as containing 27.4 to 41.7 percent SiO_2 and 42.0 to 54.5 percent FeO.[106] Of special note is the Mt. Isa Mines copper operation, which produces slags almost identical in concentration of major constituents to Inco's nickel furnace slags: 35.7 percent SiO_2 and 47.0 percent FeO.[106] Because of the similarity in composition of nickel and copper smelting slags, it appears that Inco's experience related to slag foaming can be applied to copper reverberatory furnaces. Based on the data, it appears unlikely that slag foaming would be a problem in oxy-fuel-fired copper reverberatory furnaces charged with Wagstaff guns.

ASARCO's comments on the partially smelted charge's hindering the spread of new charge are based primarily on the fact that calcine has been noted to accumulate, under certain circumstances, beneath Wagstaff guns and hinder the spreading of charge that continues to flow from

---

*No temperature measurements or profiles were developed during the pilot test. Heat distribution conclusions were based on observing the bath during and after charging.

the gun.[104] The circumstances alluded to are those in which calcine, which is sticky due to composition or excessive temperature, tends to "hang up" in the larry car and slowly discharge from the gun.[107] Such behavior has been noted previously by Weisenberg et al.[108] Under these conditions, the relatively small weight of calcines initially entering the furnace starts to smelt directly beneath the gun discharge. ASARCO reports[107] that this mass of partially smelted material hinders the spreading of additional calcines, which slowly discharge from the larry car. It appears, however, that calcine spreading under these conditions is hindered primarily by a low velocity of discharge from the gun rather than by the presence of a partially smelted mass beneath the gun. While it is acknowledged that hot calcine can stick together and resist flowing, under normal conditions it is very free flowing.[109] Hence, under normal conditions, calcine charged via Wagstaff guns is imparted substantial horizontal velocity (due to the angle of the gun) and is reported as flowing "almost like a liquid" over one-half to two-thirds of the surface of the bath.[110] In light of this fact, it is difficult to envision how regions of partially smelted material on the bath would substantially hinder the spreading of the next charge.

Insufficient information exists with regard to the potential magnitude of difficulties with roof refractory maintenance in existing silica-arch furnaces retrofitted with oxy-fuel burners. However, such potential difficulties would not be expected in new furnaces employing oxy-fuel firing. The Inco furnace employs a suspended roof of magnesite refractory, which does not require hot patching. It is expected that new furnaces would employ magnesite roofs because the trend has generally been toward greater use of magnesite refractory.

It should be noted that sidewall overheating is not expected to be a problem with the retrofit of oxy-fuel burners to Wagstaff-charged furnaces. The furnace at Inco makes some use of the small calcine charge banks to protect the sidewall refractory from excessive heat. However, this particular furnace does not have sidewall cooling panels.[111] Most furnaces charged by Wagstaff guns employ sidewall cooling by design, and Inco has indicated that it is likely that such

furnaces could rely on the existing sidewall cooling scheme to prevent excessive refractory wear.[111] It should also be noted that the sidewall temperature is strongly affected by (1) the distance from each burner to the wall and (2) the angular position of the burner relative to the vertical. At the Inco furnace, some initial problems with sidewall overheating were eliminated when the burners were repositioned.[100] It can be concluded that the combination of sidewall cooling and proper burner positioning would eliminate any potential sidewall overheating problems.

Overall, Inco has reported that Wagstaff gun charging systems are believed to be technically feasible for use on reverberatory furnaces with full oxy-fuel firing, although some development work would be required.[36] It is possible that the furnace would require more Wagstaff guns and more frequent charging than is characteristic of conventionally fired furnaces with Wagstaff feeding systems.[36]

3.4.3.5.5 Conclusions. The operating experience discussed indicates that three methods of oxygen introduction to reverberatory furnaces have been extensively tested: (1) the use of primary air enrichment, (2) undershooting the flame with oxygen, and (3) the use of roof-mounted oxy-fuel burners. The first two schemes are considered demonstrated for green- and calcine-charged reverberatory furnaces, irrespective of the means of charging.* Roof-mounted oxy-fuel firing is considered demonstrated for green-charged reverberatory furnaces, based on the extensive experience at the Caletones smelter. With regard to the use of oxy-fuel firing on calcine-charged furnaces, extensive experience has been accumulated by Inco on a side-charged nickel reverberatory furnace. Nickel concentrates are similar to copper concentrates in that both are sulfide materials containing a substantial percentage iron that are produced via froth flotation

---

*The opinion of the domestic industry lends further support to this conclusion. ASARCO has indicated that primary air enrichment and oxygen undershooting are viable alternatives for increasing the capacity of calcine-charged furnaces.[112] Kennecott has reported that oxygen enrichment is a technically feasible expansion option for green-charged reverberatories at its McGill smelter.[8]

after fine grinding of the ores. Hence, the calcines produced by roasting have similar physical properties. On this basis, oxy-fuel firing is considered viable for calcine-charged copper reverberatory furnaces using sidewall feeding.

There appears to be no technical reason why full oxy-fuel firing could not be used on reverberatory furnaces charged with Wagstaff guns. However, some of the data indicate possible engineering and production problems that may preclude such usage under some conditions. Consequently, for the purposes of this analysis, the use of oxy-fuel firing on Wagstaff-charged furnaces is not considered to be fully demonstrated.

The literature indicates that some tests have been performed in full-scale furnaces using oxygen lancing through the roof. This technique of oxygen enhancement may be demonstrated.

Oxygen-sprinkle smelting technology is not considered fully demonstrated at the present time in light of the hesitancy on the part of Phelps Dodge to adopt it without further testing.

On the basis of Inco's experience, it is concluded that essentially no changes in matte grade would be expected with the addition of oxy-fuel burners to reverberatory furnaces. Similarly, it is expected that no changes in matte grade would occur with oxygen enrichment and oxygen undershooting because these schemes are less extreme in terms of oxygen usage and flame temperature than oxy-fuel firing. A more thorough discussion of the question of matte grade changes with oxygen enhancement is addressed in Section 4.4.6.3.

Primary air enrichment and oxygen undershooting have generally been employed to obtain production increases of less than 50 percent. In this analysis, it is assumed that a 20-percent increase in production is achievable when using either of these schemes in green- or calcine-charged reverberatory furnaces. It is further assumed, based on the extensive operating experience at the Rokana smelter and the fact that maximum flame temperatures shift closer to the bath when undershooting the flames with oxygen, that this scheme is preferable to oxygen enrichment of the primary burner air for increasing furnace capacity.

In light of Inco's experience with roof-mounted oxy-fuel burners, a 40-percent increase in production is considered achievable with this scheme in calcine-charged reverberatory furnaces.

Based on the experience at the Caletones smelter, a 50-percent increase in furnace throughput will be considered achievable for green-charged furnaces retrofitted with roof-mounted oxy-fuel burners.

3.4.3.6 Replacement of Reverberatory Smelting by Flash Smelting. In lieu of expanding existing reverberatory furnaces to increase capacity, smelters may elect to replace this technology with flash furnaces and simultaneously increase throughput. This option would be viable for smelters that could tolerate the increased matte grade produced by the flash furnace. Depending on the matte grade produced by the flash furnace, substantial increases in throughput can be achieved without increasing converter capacity because converter cycle time is reduced with a higher grade matte. For example, increasing matte grade from 40 to 55 percent via installation of a flash furnace allows furnace throughput (hence plant throughput) to be increased by 100 percent without adding additional converters. However, use of flash smelting does require the installation of concentrate dryer capacity.

The ASARCO-Hayden smelter is planning to convert from reverberatory smelting to Inco flash furnaces.[35] Kennecott Corporation is considering a similar conversion for its Hurley smelter.[113]

3.4.4 Electric Furnaces

As with reverberatory furnaces, green-charged electric furnaces may increase capacity by converting to calcine-charged operation. The furnace capacity would increase because less heat is required to smelt the roasted calcine at about 540° C (1,000° F) than is required to smelt dried feed at a temperature of about 65° C (150° F). For this analysis, an increase of 40 percent is assumed achievable. Inspiration Consolidated Copper Company has indicated that the conversion to calcine-charged operation would be its most likely electric furnace expansion mode.[54]

In contrast to reverberatory furnaces, the conversion to calcine-charging in an electric furnace would not require the addition of cooling panels at the furnace slag line because neither charge banks nor fossil fuel burners are used in electric furnaces. Also, it is not likely that extensive feed system modifications would be required in order to process calcine feed. Electric furnaces smelt dried concentrates, and the handling of dried concentrates and calcines is similar.

Both green- and calcine-charged electric furnaces can increase capacity by eliminating converter slag return. An increase in production similar to that achieved in reverberatory furnaces (25 percent) would be expected.

It is conceivable to increase electric furnace capacity by installing a larger transformer. However, up-powering the furnace would increase slag temperatures, leading to increased refractory wear.[114] Hence, this option is not considered to be viable to the industry.

Physically expanding electric furnaces is also a conceivable option. However, the transformer and electrode design parameters are usually sized closely to the rated furnace capacity.[114] As a result, it appears that this option would be impractical, and it is considered unfeasible in this study.

It should be noted that expansion modes employing oxygen enrichment, such as those useful for reverberatory furnaces, would not be feasible for electric furnaces. Oxygen enrichment offers no advantage because no fuel is combusted.

In lieu of expanding existing electric furnaces to increase capacity, smelters may elect to replace this technology with flash furnaces and simultaneously increase throughput. This option would be viable for smelters that could tolerate the increased matte grade produced by the flash furnace. Depending on the flash furnace matte grade, substantial increases in throughput can be achieved without increasing converter capacity because converter cycle time is reduced with a higher grade matte. For example, increasing matte grade from

40 to 55 percent via installation of flash furnace allows plant throughput to be increased by approximately 100 percent without adding additional converters.

3.4.5 Outokumpu Flash Furnaces

Outokumpu flash furnaces can increase capacity readily by using oxygen-enrichment of the process air. Physically expanding Outokumpu furnaces is not considered technically feasible,[115] primarily because of the furnace geometry. No option exists for expanding furnace capacity by eliminating converter slag return because this slag is generally processed in other facilities by design.

Outokumpu Oy has reported increasing the capacity of its flash furnaces at Harjavalta, Finland, by 60 to 70 percent when the oxygen content of the process air was raised to 30 to 40 percent.[116] The use of oxygen yielded an SO_2 concentration in the offgases of 18 to 20 percent and reduced the oil requirement of the furnace. The increased capacity in the furnace resulted primarily from the decreased gas volume afforded by oxygen enrichment.

Phelps Dodge-Hidalgo smelter personnel have indicated that their Outokumpu furnace capacity could probably be increased by 25 percent through the use of oxygen enrichment of the combustion air.[117] Expansions greater than 25 percent would lead to overheating of the reaction shaft and increased logistics problems with respect to ancillary material-handling systems.

3.4.6 Noranda Reactors

The primary expansion mode for Noranda reactors is through oxygen enrichment of the blowing air. Kennecott Corporation has increased reactor capacity by some extent at its Garfield facility by increasing the oxygen-enrichment level from the design value of 30 percent to 34 percent.[118] A further increase in throughput by about 6 percent could possibly be achieved with an enrichment level of 36 percent oxygen. A level of about 36 percent oxygen is considered to be the upper limit because it represents the point of autogenous reactor operation.[118] Such operation is undesirable because reactor control is difficult.

It is conceivable to increase Noranda reactor capacity by increasing the blowing rate via the installation of a larger blower. However, this scheme is not considered to be a viable expansion option because of offgas handling constraints.[118]

Physical expansion of Noranda reactors coupled with increasing the number of tuyeres is also a conceivable expansion option. This option is not considered viable in this analysis because of physical space limitations, down time requirements, and offgas handling constraints.

In conclusion, no expansion options other than additional oxygen enrichment are considered viable for Noranda reactors. The use of additional oxygen would produce only a slight increase in capacity, however.

3.4.7 Converters

ASARCO has reported increasing the capacity of a Peirce-Smith converter at its Tacoma smelter through physical expansion.[119] The converter was lengthened by 5 feet, and 6 additional tuyeres were added, increasing the number of tuyeres from 46 to 52. As a result, the capacity of the converter increased by approximately 13 percent.

Converter capacity may be increased by increasing the air-blowing rate alone, which would decrease the time required for matte conversion. Such an expansion could require the installation of a larger blower. However, the upper limit on blowing rate is determined by the excessive ejection of molten material from the converter. In this analysis, it is assumed that domestic converters operate at or near their maximum blowing rate. Hence, this expansion mode is not assumed to be a viable one for the industry.

Oxygen enrichment of converter blowing air appears to be an option for increasing converter capacity because it results in an increase in the rate of conversion of matte to blister copper during blowing. Oxygen usage in converters has been widespread in the past, with 7 of the 15 domestic smelters having reported its use during the slag and/or copper blows.[120] The percentage of oxygen in the blowing air has not exceeded 29 percent (with 24 to 26 percent being most common) because higher levels can lead to refractory damage from increased operating temperatures.

It should be noted, however, that oxygen enrichment of converter blowing air has been used, almost exclusively, to allow increased processing of scrap materials. Indeed, scrap materials are required when oxygen enrichment is employed, to reduce converter temperatures. Charging scrap materials to the converters serves to interrupt the blowing cycles. Hence, although the actual blowing time is reduced with oxygen enrichment, it is not clear that a decrease in total cycle time ensues. Also, the use of oxygen enrichment would be contingent upon the availability of sufficient scrap materials. For these reasons, and because it has not been employed for increasing the rate of matte throughput in the industry, oxygen enrichment of converter blowing air is not considered a viable option for increasing converter capacity in this analysis.

It is concluded that physical expansion coupled with increasing the number of tuyeres is the most likely mode of increasing the matte throughput rate of a converter. Only a limited expansion can be achieved by this method, however.

3.5 SUITABILITY OF ALTERNATIVE TECHNOLOGIES FOR PROCESSING HIGH-IMPURITY FEEDS

3.5.1 Background

Domestic smelters that process high-impurity feeds--i.e., those defined in the present NSPS as containing more than 0.2 weight percent arsenic, 0.1 weight percent antimony, 4.5 weight percent lead, or 5.5 weight percent zinc--generally employ the multihearth roaster-reverberatory furnace-converter configuration. An exception is the Phelps Dodge-Ajo smelter, which processes feeds containing 0.3 percent arsenic with a green-charged reverberatory furnace.[121] The industry has stated the need to maintain this configuration because of the flexibility afforded in terms of impurity elimination capability, which allows product quality to be maintained, and the capability to process secondary materials. The primary factor affording both these advantages is the low (40 to 45 percent) matte grade produced by this smelting configuration. Such a matte grade leads to long blowing times in the converters, which are highly effective for eliminating impurities. Furthermore, the heat released while blowing such a matte allows substantial quantities of secondary materials, which can include

some lead-smelter byproducts, to be processed in the converters. The industry further endorses the multihearth roaster-reverberatory furnace-converter configuration because its multistep treatment allows some impurity segregation during impurity recovery.*

The rationale (under the original NSPS) for exempting reverberatory furnaces from control when processing a charge containing a high level of volatile impurities is multifaceted. At promulgation, the cost of control of the weak SO_2 stream was considered unreasonable. Operation of electric furnaces, which were considered technically capable of processing such a charge, was not considered affordable in the Southwest. The other alternative to the conventional reverberatory furnace evaluated at that time was the Outokumpu flash furnace, which was in use worldwide. This technology was dismissed on technical grounds. It had not been used to smelt a charge containing more than a fixed level of certain impurities and was not considered to have been demonstrated for smelting feeds having compositions similar to those encountered at installations such as ASARCO-Tacoma.† The maximum levels of impurities processed by the Outokumpu furnace were used, however, as the basis for defining a "high level of volatile impurities." No other technologies were assessed as possible replacements for the reverberatory furnace since the Outokumpu furnace was considered to be the most likely option in lieu of an electric furnace.

It is the purpose of this section to reassess, in light of the requirements of the industry, the suitability of alternative technologies for processing HI feed materials.

---

*At the ASARCO-Tacoma smelter, for example, which processes feeds having high levels of arsenic, impurities are separated into an arsenic-rich stream (the roaster and reverb offgases) and a lead-antimony-rich stream (the converter offgases). The arsenic-rich material is roasted in a separate process to produce arsenic trioxide and to recover the copper in the dust, while the lead-antimony-rich material is processed in a lead smelter for the recovery of lead, zinc, bismuth, and antimony.

†This installation, a custom smelter, has by far the greatest impurity burden of all of the domestic copper smelters.

3.5.2 Impurity Behavior During the Smelting Process

The ultimate objective in copper smelting and refining operations is the production of a product containing less than specified maximum levels of impurities. Impurity removal occurs at each stage of the operation: roasting, smelting, converting, fire-refining, and electrolytic refining. If the impurity burden to the plant is high, care must be taken during the first four operations to remove the bulk of the impurities. Current practice is to maintain the impurity levels of anode (fire-refined) copper below certain limits before electrolytic refining. In Table 3-7, the maximum acceptable average impurity levels in anode copper from the ASARCO-Tacoma smelter are presented.[122] The typical average impurity levels in blister copper corresponding to this particular anode composition are presented for comparison.[122]

High impurity feed materials include concentrates from various sources, as well as various smelter byproducts--notably those from lead smelters. Assays of various high impurity materials that have been processed at the ASARCO-Tacoma smelter are presented in Table 3-8. The Lepanto concentrate, produced in the Phillipines, shows high levels of arsenic and antimony, at 11 percent and 0.75 percent, respectively. North Peru concentrate shows high levels of arsenic (11.2 percent), antimony (2.1 percent), and zinc (9.3 percent). With regard to the lead smelter byproducts, both the lead matte and lead speiss contain high levels of arsenic, antimony, and lead. In general, substantially lower quantities of lead smelter byproducts are processed, as compared to the high impurity concentrates. Also, it should be noted that current practice involves blending high-impurity materials with other materials containing low levels of impurities to produce a roaster charge containing manageable impurity levels. ASARCO has indicated (1976) that the anticipated maximum impurity levels in future (blended) feeds to the Tacoma smelter are 6.3 percent arsenic, 0.78 percent antimony, 3.3 percent lead, and 1.5 percent zinc.[125]

The behavior of any specific impurity element during the copper smelting process is dependent upon thermodynamic, kinetic, and process

TABLE 3-7. MAXIMUM ACCEPTABLE IMPURITY LEVELS IN ANODE COPPER, AND CORRESPONDING LEVELS IN BLISTER COPPER PRODUCED AT THE ASARCO-TACOMA SMELTER[122]

Element	Maximum acceptable average concentration in anode copper, weight percent	Corresponding average level in blister copper, weight percent
Arsenic	0.20	0.35
Antimony	0.15	0.20
Lead	0.07	0.15
Zinc	N/A	N/A
Bismuth	0.02	0.03
Nickel	0.19	0.20
Selenium	0.05	0.06
Tellurium	0.06	0.06

TABLE 3-8. ASSAYS OF VARIOUS HIGH IMPURITY MATERIALS PROCESSED AT ASARCO-TACOMA

Material	% Cu	% Fe	% S	% As	% Sb	% Pb	% Zn	Reference
Concentrates								
Lepanto	31.0	11.9	35.2	10.94	0.75	0.21	1.0	123
North Peru	30.2	7.7	29.8	11.19	2.07	4.00	9.3	123
Lead Smelter By-Products[a]								
ASARCO Lead Matte	37-49	5-11	6-15	0.5-7	0.2-1.2	7-10	2.67	123,124
ASARCO Lead Speiss	52-58	1-2	0.1-1.4	16-20	4-7	10-13	0.10	123,124

[a]Typical analyses from the ASARCO E. Helena and El Paso lead smelters, 1979-81.

parameters. The extent of removal of a given impurity obviously depends, to some degree, upon its concentration. Impurities are removed by volatilization and slagging.

Volatilization can occur for impurity elements in sulfide form, in oxide form, or in the free state, depending upon the element. Most impurities are present as sulfides in the charge to the smelter. However, oxides of most impurities can form under oxidizing conditions.* The sulfides of the impurities Sb, Pb, and Zn are more volatile than the corresponding oxides. In the case of As, both the sulfide and oxide forms are extremely volatile. Overall, arsenic compounds are perhaps the most volatile of the major impurities.

Impurity elimination through slagging occurs by the combination of the metal oxides with silica, similar to the slagging of iron oxide.

3.5.2.1 Impurity Elimination During Roasting. Conventional roasting removes impurities as volatilized materials and as chemically altered dusts. Hence, impurity elimination is affected by the temperature, residence time, and the roaster atmosphere. These same parameters govern the elimination of sulfur in the roaster. As discussed previously, the sulfur elimination during roasting is a major determinant of the matte grade produced during smelting, for a given charge composition. Overall impurity removal is maximized in the conventional multihearth roasting, reverberatory smelting, converting operation concurrent with the production of a relatively low-grade matte (40 to 45 percent copper) in the smelting furnace. Because of this constraint on matte grade, there is little latitude for direct control of impurity elimination in the roasting operation itself.[126]

Impurity elimination in a multihearth roaster is generally greater than in a fluidized-bed unit for any level of sulfur elimination. In a multihearth roaster, it is possible to vary oxidizing and reducing conditions, temperature, and gas composition on each hearth. The residence times of concentrate particles in a multihearth roaster

---

*The impurity elements As, Sb, Pb, Zn, and Bi all have a greater affinity for oxygen than does copper.

generally range from 1 to 2 hours.[127] A single fluidized bed roaster can provide only one set of conditions at a time, either oxidizing or reducing. The temperature remains essentially constant throughout the bed, although hot spots may be present. The average residence time of concentrate particles in a fluidized bed roaster is much shorter compared to a multihearth roaster and can differ by as much as a factor of ten.[128] It should be noted that this difference is sufficiently great to permit the operation of two or more fluid-bed roasters in series. This scheme would overcome the limitation of providing only one set of conditions during fluid-bed roasting. While this approach has been used in processing other materials, there is no experience with two-stage fluid-bed roaster systems in the copper industry.

The extent of elimination of impurities during roasting in multihearth roasters for one particular feed impurity level is indicated in Table 3-9, which provides information on impurity distributions during roasting and reverberatory furnace smelting (based on the ASARCO-Tacoma operation[123] processing HI feed materials). It is noted that 25 percent of the feed arsenic is eliminated during roasting, while only between 4 and 8 percent of other important impurity elements are eliminated.

The sulfidizing roast process,[129] developed by Outokumpu Oy in Finland, was developed specifically to eliminate volatile impurities from ore concentrate feeds before smelting. This process, although still in the pilot stage of development, yields substantially greater impurity removal than does multihearth roasting.

In sulfidizing roasting, ore concentrates are dried and preheated and fed to a rotary sulfidization kiln. The sulfidizing atmosphere is provided by elemental sulfur, which is vaporized and transported by a preheated nitrogen carrier gas into the kiln. The hot gas flows countercurrently to the feed. Under the process conditions the complex compounds decompose into base metal sulfides (iron and copper sulfides) and volatile impurity sulfides containing arsenic, antimony, and bismuth. The volatile impurity sulfides are carried out of the kiln in the offgases and are condensed for recovery.

TABLE 3-9. DISTRIBUTION OF IMPURITY ELEMENTS IN CONVENTIONAL SMELTING WHEN PROCESSING HIGH-IMPURITY FEEDS[a]

Impurity element	Percentage reporting in various streams[1,2,3]			
	Multihearth roaster dust	Reverb dust	Reverb slag	Reverb matte
Arsenic	25	52	10	13
Antimony	6	25	50	19
Lead	5	20	19	56
Zinc	5	21	65	9
Bismuth	4	20	1	75
Tin	5	18	47	30
Nickel	0	2	6	92
Selenium	6	18	2	74
Tellurium	8	22	2	68

[a]Based on the ASARCO-Tacoma smelter. The levels of these impurities in the feed are not available.

Both laboratory and pilot-plant tests of the sulfidizing roast process have been made. The laboratory tests established the following impurity-elimination capability:[129]

- Arsenic removal (up to 10 percent As in feed), 99 percent
- Antimony removal (up to 1.5 percent Sb in feed), 50 to 80 percent
- Bismuth removal (up to 0.2 percent Bi in feed), 20 to 30 percent

On the basis of the laboratory tests, Outokumpu established that arsenic can be removed essentially completely, regardless of its original concentration in the feed.[129] Optimum arsenic elimination occurs with operating temperatures in the range of 600° to 800° C (1,110° to 1,470° F).

Pilot-scale tests of the process were made in a plant of 10 to 100 kg/h (20 to 220 lb/h) feed capacity. The tests with copper concentrates were made at feed rates of 10 and 15 kg/h (20 and 30 lb/h). The pilot plant was comprised of a concentrate preheater, sulfur vaporizer with nitrogen carrier gas system, sulfur vapor preheater, rotary sulfidization kiln, concentrate cooler, and volatile impurity condenser. In the tests, the sulfidization kiln was heated indirectly by an electric resistance heating system. Problems with this heating scheme caused the operating temperature of the sulfidization kiln to be too low. Also, the temperature at the discharge end of the kiln was often too low, which caused arsenic sulfide vapor to condense back onto the sulfide particles. The result of these problems was that arsenic removal from copper concentrates in two pilot tests (at 92 percent and 98 percent) was lower than that achieved in the laboratory tests. The level of sulfur removal during these two tests was 32 percent and 37 percent, respectively.*

---

*The pilot test data also indicate that the degree of sulfur elimination is a function of the degree of impurity elimination achieved.

The next step in the development of the process will be tests with a larger pilot plant, which will process up to 1 Mg/h (1.1 tons/h). The sulfidization unit in this plant will be a brick-lined, direct-heated rotary kiln designed for the combustion of sulfur vapor and coal in the reaction space.

Projections of process parameters achievable in full-scale operation (10 Mg/h [11 tons/h] feed) of the sulfidizing roast process have been made by Outokumpu. These projections show in excess of 99 percent removal of arsenic from copper concentrate containing 11.4 percent As. Sulfur removal is projected at 43 percent. Projections for the removal of antimony and bismuth in full-scale operation are not given; however, based on the elimination predicted for arsenic, it is reasonable to assume that antimony and bismuth would be eliminated at approximately the same level as occurred in the laboratory tests.

3.5.2.2 Impurity Elimination During Smelting. Impurity elimination in smelting furnaces occurs by volatilization and slagging. The amount of a given impurity that is slagged or volatilized generally varies from one furnace to another.

Data illustrating the distribution of various important impurities during reverberatory furnace smelting are shown in Table 3-9. As noted for roasting, arsenic is volatilized to the greatest extent. In contrast, antimony and zinc report extensively to the slag. The majority of the lead and bismuth present in the charge report to the matte and must be eliminated during converting.

The behavior of the impurities arsenic, antimony, lead, and zinc during electric furnace smelting has been investigated by the Bureau of Mines.[125] A total of 14 smelting tests were made in cooperation with ASARCO, which was interested in evaluating electric furnace smelting as a possible alternative for its Tacoma smelter. A small (800 KVA) electric furnace was used in the investigation. The furnace charges consisted primarily of blends of chalcopyrite concentrates and smelter by-products. These materials were blended by ASARCO to simulate the present and anticipated future material flow through the Tacoma smelter. The feed materials contained the following range of elemental concentrations: 19.7 to 22.5 percent Cu, 15.7 to 26.7 percent Fe,

17.6 to 24.4 percent S, 0.94 to 6.3 percent As, 0.24 to 0.78 percent Sb, 1.5 to 3.3 percent Pb, and 0.80 to 1.5 percent Zn. Smelting parameters were changed during the tests to determine the effect of various electric-furnace smelting conditions on the compositions of the smelting products.

Of special note are tests in which changes were made in the air sweep over the furnace bath. Investigations were made in which (1) the flow rate of ambient air over the furnace bath was varied and (2) ambient air was replaced by a stream of argon blown over the bath. Arsenic analyses of the smelting products did not indicate any effect from these changes. The Bureau of Mines concluded that changes in air sweep through the furnace do not affect the arsenic distribution.[125]

Impurity analyses were made of the matte produced in essentially all of the tests. It was further concluded that, with the exception of arsenic, which reports more readily to the matte in an electric furnace, the distribution of impurity and by-product elements (including lead, zinc, and antimony) is essentially the same as in a reverberatory furnace.[125] No information was provided as to the extent the matte arsenic levels were increased over those in reverberatory smelting. ASARCO has indicated, however, that the conclusions reached in the study with respect to matte arsenic levels pertain to a comparison of green-charged electric furnaces and the combination of roasters and reverberatory furnaces[130] (such as is used at the Tacoma plant). Hence, the Bureau of Mines study does not contradict previous conclusions to the effect that electric furnaces are technically demonstrated for processing high-impurity feeds.

Inco has investigated the extent of volatilization of arsenic, lead, and zinc in its Copper Cliff flash furnace.[131] When producing a 40- to 50-percent copper matte, the proportions of these elements fumed were, respectively, 50 to 60 percent, 20 to 25 percent, and 5 to 10 percent. The investigation used Copper Cliff concentrate, which typically contains 0.002 percent As, 0.05 percent Pb, and 0.17 percent Zn.[131 132] Arsenic was indicated to fume within the flash furnace as As_4O_6, a form consistent with the degree of exposure of the feed to the oxidizing atmosphere in this process. Through tests made in a

bench-scale flash furnace (Section 3.5.4), Inco established that the proportion of the impurity fumed increased with matte grade.[131] Furthermore, over the range of impurity concentrations examined in the bench-scale furnace (Section 3.5.4), it was determined that the proportion of the impurity fumed was independent of the level of the impurity in the feed.[131]

Although complete data are not available, impurity elimination in flash furnaces appears to be greater than in reverberatory furnaces. The intimate contact between the feed and the hot, oxidizing atmosphere may increase volatilization and should lead to increased impurity removal via slagging. Inco has reported that some flash furnace feasibility studies it has performed for various companies indicated that blister copper impurity levels are lower with flash smelting.[36]

Mackey et al.[133] have investigated impurity behavior in the Noranda process when operated for the production of both high-grade matte and blister copper. The levels of the impurities in the feed were not reported, however. The investigations were made using a 730-Mg/day (800-tons/day) prototype reactor. The distribution of impurities when making a 70-percent copper matte is shown in Table 3-10. Extensive volatilization is noted to occur for arsenic, antimony, lead, and bismuth--primarily because the reactor operates much like a converter. Zinc, which oxidizes readily, reports primarily to the slag.

When blister copper is produced in the reactor directly, the distribution of impurity elements changes substantially, as shown in Table 3-11, with substantial percentages of As, Sb, and Bi reporting to the blister copper. Such behavior results since these elements are quite stable in copper and can dissolve therein before volatilization can occur. Mackey et al. concluded in their investigation that blister copper produced directly in the reactor contained higher levels of these impurities than those produced by conventional reverberatory smelting. Similar conclusions were reached by Kennecott when considering the Noranda process for its Garfield, Utah, smelter. The concentrates processed at this smelter have trace quantities of arsenic, antimony, and bismuth.[66] Increased levels of these impurities in the blister

TABLE 3-10. DISTRIBUTION OF IMPURITY ELEMENTS IN THE NORANDA PROCESS (MATTE PRODUCTION MODE)[133]

Impurity element[a]	Percentage reporting in reactor streams		
	Offgas (dust)	Slag	70% Cu matte
As	85	7	8
Sb	57	28	15
Pb	74	13	13
Zn	27	68	6
Bi	70	21	9

[a]The levels of these elements in the feed were not reported.

TABLE 3-11. DISTRIBUTION OF IMPURITY ELEMENTS IN THE NORANDA PROCESS (BLISTER COPPER PRODUCTION MODE)[133]

Impurity element[a]	Percentage reporting in reactor streams		
	Offgas (dust)	Slag	Reactor copper
As	19	27	54
Sb	29	36	35
Pb	24	74	2
Zn	21	78.9	0.1
Bi	52	30	18

[a]The levels of these elements in the feed were not reported.

copper were considered to result in unacceptable levels in the anode and cathode copper.[66] For this reason, Kennecott opted to use the Noranda process for the production of high-grade matte, with subsequent oxidation to blister copper in Peirce-Smith converters.

With respect to the Mitsubishi process, no data are available with which to characterize the distribution of impurity elements. However, the possibility exists that the retention of As, Sb, and Bi might be high because of the continuous contact between the matte and blister copper in the converting furnace.[134]

3.5.2.3 Impurity Elimination During Converting. The converting operation provides the greatest latitude for controlling the impurity content of blister copper. The converter is considered to be a fairly ideal vessel for impurity control because of the large effective area between the gas phase and the liquid matte. Impurities are eliminated during converting by both volatilization and slagging.

The removal of impurities is most effective during slag blows. This is because, as discussed previously, impurities are quite stable in blister copper (produced during the copper blow). Converting of a low-grade matte (40 to 45 percent Cu) is desirable since the duration of the slagging cycle is increased, which allows more time for impurity removal. The effect of matte grade on the removal of the impurities arsenic, antimony, and bismuth during converting has been investigated by George et al.,[135] and is illustrated graphically in Figures 3-14 through 3-16, respectively. The levels of these impurities in the matte were relatively low, at 0.01 to 0.1 percent.[136] For antimony and bismuth, the percentage elimination decreases with increasing matte grade. In the case of arsenic, the elimination is quite constant until a matte grade of approximately 65 percent is attained, at which point a rapid decrease ensues. It should be noted that a low degree of impurity removal during converting may not be consequential if, as in the case of Noranda reactors operated for the production of high-grade matte, substantial impurity elimination occurs during the smelting step.

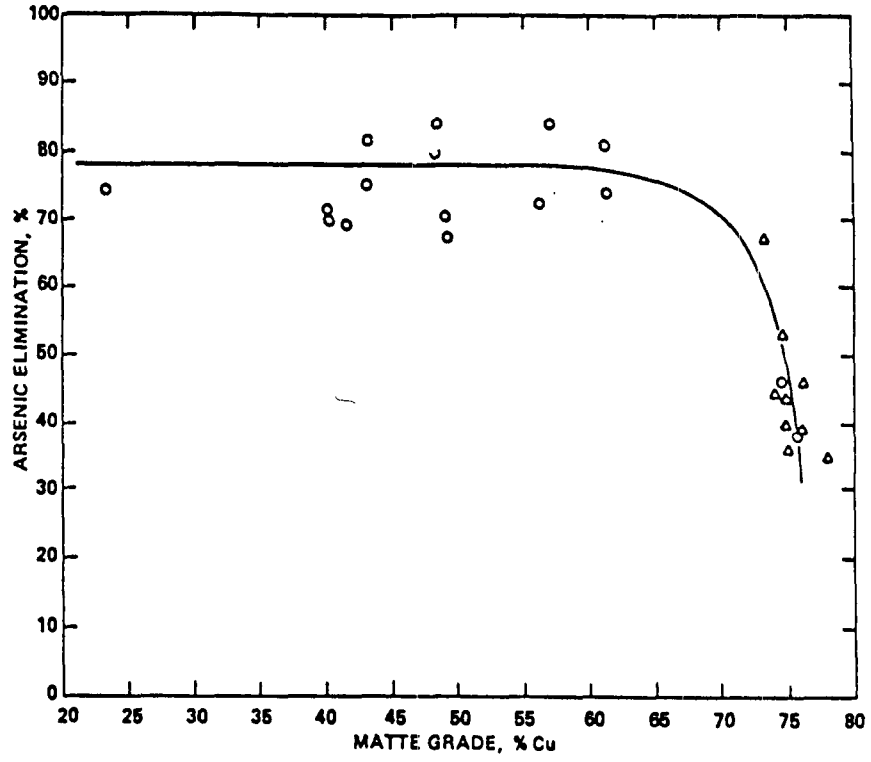

Figure 3-14. Converter elimination of arsenic as a function of matte grade.[135]

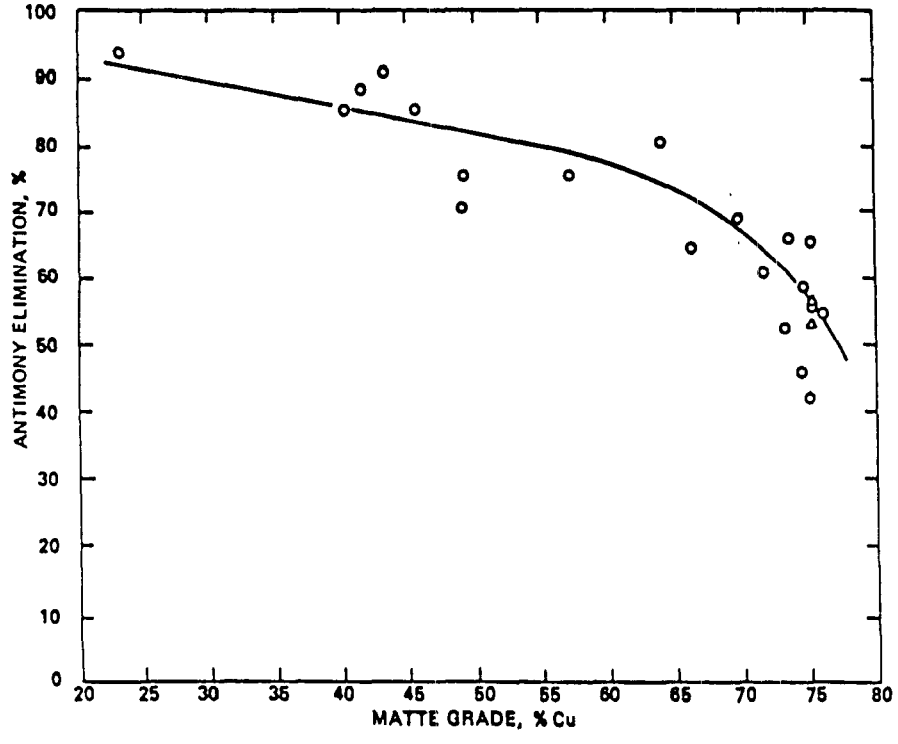

Figure 3-15. Converter elimination of antimony as a function of matte grade.[135]

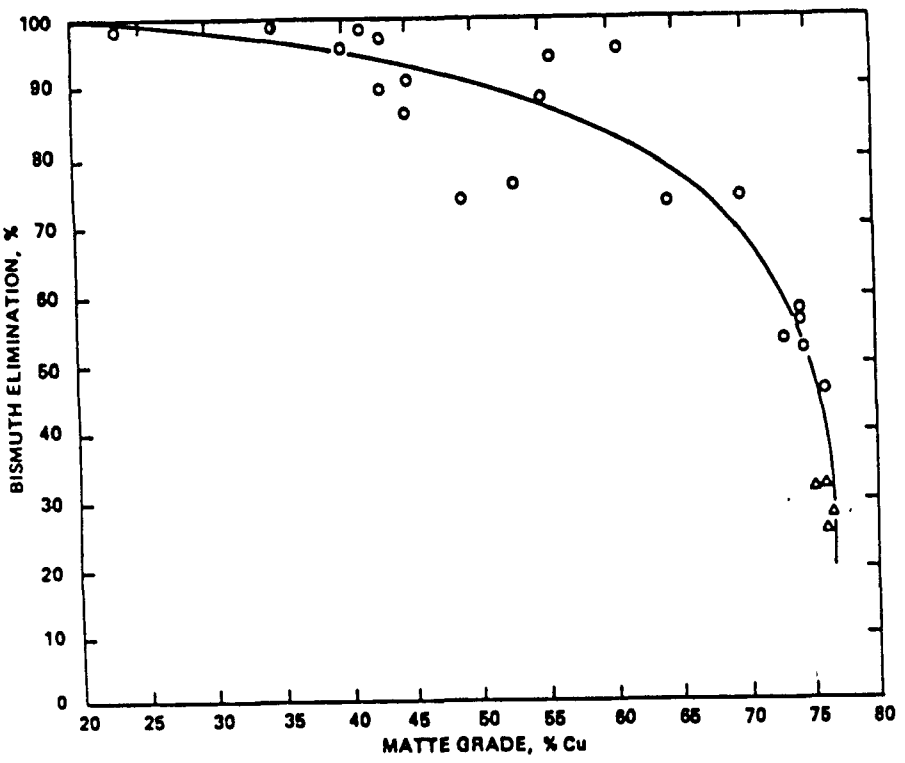

Figure 3-16. Converter elimination of bismuth as a function of matte grade.[135]

With regard to the mechanism of impurity elimination during converting, volatilization is more important for arsenic and bismuth, while oxidation-slagging is more important for antimony and zinc. Both mechanisms are essentially equally important for lead.[137]

3.5.3 High-Impurity Feed Processing Experience with Outokumpu Flash Furnaces

The smelting of concentrates containing substantial quantities of lead and zinc impurities in a flash furnace has been reported at the Kosaka smelter in Japan.[138] Assays of two such concentrates are presented in Table 3-12. All of the impurities reported at Kosaka have concentrations below those levels specified in the current exemption. However, their experience processing feeds with these impurity levels is pertinent to this analysis.

Because most impurities were concentrated in the flue dusts at Kosaka, the dust production rates of both the furnace and the converters were fairly high as compared to other smelters. Initially, all of the dusts from the flash furnace were recycled. The high lead content, however, resulted in excessive accretions in the flash furnace waste heat boiler, causing low heat recovery. These problems led to the elimination of dust recycle to the furnace. As an alternative, the flash furnace dust was ultimately processed in a hydrometallurgical treatment plant which afforded the separation and recovery of copper, zinc, lead, and cadmium.

Outokumpu Oy has investigated the processing of high-impurity feeds in its technology. Concentrates containing 10 percent zinc and 5 percent lead have been smelted in a pilot plant operation.[139] As a result of its investigations, Outokumpu Oy recommends the maximum feed impurity limits in Table 3-13, which vary depending upon the mode of operation of the smelter.[139] Condition A pertains to operation with the recycle of all dusts produced except those recovered from the sulfuric acid plant. Condition B pertains to operation of the smelting complex in the same manner as discussed for A, but with increased purification of electrolytes in the electrolytic refining operation to compensate for slightly increased impurity levels in the anode copper. Condition C refers to operation with more outlets for impurities, such

TABLE 3-12. IMPURITY ASSAYS OF FEED MATERIALS PROCESSED IN THE OUTOKUMPU FLASH FURNACE AT THE KOSAKA SMELTER[138]

Copper concentrate	Impurity concentration, percent					
	As	Sb	Pb	Zn	Bi	Cd
Concentrate A	0.10	-	2.5	3.0	0.04	0.02
Concentrate B	0.14	-	3.1	2.5	0.03	0.01

TABLE 3-13. MAXIMUM IMPURITY LEVELS RECOMMENDED FOR THE OUTOKUMPU FLASH FURNACE[139]

Mode of operation	Maximum concentration of impurity in concentrate feed, percent				
	As	Sb	Pb	Zn	Bi
A	0.25	0.025	1.5	5	0.03
B	1	0.1	3	10	0.2
C	5	0.5	5	10	1.0

as separate treatment of converter dusts; electric slag-cleaning-furnace flue dusts; anode furnace slag; all or part of the flash furnace flue dust; and, possibly, increased purification of the electrolyte during electrolytic refining. Where the arsenic content of the feed exceeds 5 percent, Outokumpu recommends pretreatment of the concentrate, such as by sulfidizing volatilization, before smelting.[139]

3.5.4 High-Impurity Feed Processing Experience with Inco Flash Furnaces

Concentrates processed in the commercial flash furnace at Inco in Canada are very "clean" with respect to impurities, containing about 0.002 percent As, 0.05 percent Pb, and 0.17 percent Zn.[131 132] Other impurities are present only in trace amounts.[131] As indicated previously, Inco has studied the elimination of the impurities As, Sb, Pb, and Zn at higher levels in a bench-scale flash furnace.[131] The objective of these tests was to evaluate the applicability of Inco oxygen flash smelting to concentrates having higher impurity levels than those encountered at Copper Cliff.

The miniplant flash furnace employed in the tests has a flashing space enclosed within a silicon carbide tube. The tube is covered by a refractory lid. A vertical burner is used to inject the concentrate-oxygen mixture into the furnace flashing space. Matte and slag collect in a receiving crucible sitting in the lower part of the chamber. Offgases escape the chamber via an exhaust port in the refractory lid.

The unit is capable of processing up to 15 kg (33 lb) of concentrate per hour. At this rate, the process cannot be operated autogenously as does the commercial Inco flash furnace because the heat losses greatly exceed the heat generated by combusting the feed. The additional heat required for autogenous operation is supplied by burning natural gas in an annular space between the silicon carbide tube and an outer refractory shell. Hence, the furnace temperature may be controlled independently of furnace operation.

The duration of a test is limited by the capacity of the matte-slag receiving crucible. At the normal throughputs employed, a test lasts for about 1.5 hours. Temperatures at various locations within the

unit are monitored by means of thermocouples. The furnace is operated at a slightly negative pressure during tests to prevent fugitive losses of gases, fumes, and dust.

Most of the tests with increased impurity levels were made with Copper Cliff concentrate, which was doped with PbS and PbO, ZnS and ZnO, arseno-pyrite (As), and speiss (As and Sb). The range of impurity concentrations examined is shown in Table 3-14. The tests were used primarily to determine the distribution of the various impurities between the matte and slag, as a function of matte grade.

Initial tests made in the miniplant flash furnace showed that the metallurgy of the commercial flash furnace could be totally reproduced in the miniplant furnace,* in terms of the state of oxidation of the system (slag Fe^{+3}/Fe^{+2} ratio) and copper losses in the slag. Hence, conclusions (mentioned previously) reached by Inco concerning the proportion of impurities fumed from the miniplant furnace are expected to apply equally well to commercial-scale furnaces.

3.5.5 High-Impurity Feed Processing Experience with the Mitsubishi Process

The Mitsubishi process is currently in operation at two smelters worldwide--the Naoshima smelter in Japan and the Texasgulf Canada smelter in Timmins, Ontario. Mitsubishi Metals Company has provided information on the maximum impurity levels that it has processed.[140] These levels are presented in Table 3-15. Mitsubishi indicated that there was no limitation on impurity-levels in their process and that no impurity related problems would occur at high levels, provided that considerations were made for gas handling and dust treatment.

3.5.6 High-Impurity Feed Processing Experience with Noranda Reactors

The Noranda process, operated for the production of high-grade matte, is currently employed at the Kennecott-Garfield smelter and at the Horne smelter of Noranda Mines, Ltd., in Quebec. The Horne smelter

---

*The only exception noted was a lower oxygen efficiency achieved in the miniplant furnace as compared to the commercial furnace. This difference, however, results from the difficulty of obtaining an absolutely uniform delivery of concentrates through the small flash burner.

TABLE 3-14. RANGE OF IMPURITY CONCENTRATIONS TESTED IN THE INCO MINIPLANT FLASH FURNACE[131]

Impurity	Range of concentration, percent
As	0.25 to 1.0
Sb	0.1 to 0.3
Pb	0.1 to 2.0
Zn	1.0 to 5.0

TABLE 3-15. MAXIMUM IMPURITY LEVELS PROCESSED IN THE MITSUBISHI PROCESS[140]

Impurity	Maximum concentration, percent
As	0.329
Sb	0.097
Pb	0.96
Zn	6.10
Bi	0.034

is a custom smelter and typically processes copper concentrates* from about 25 different mines.[141] These materials have a range of analyses as follows:[141] up to 1 percent As, up to 0.05 percent Sb, up to 8 percent Pb, up to 10 percent Zn, up to 0.05 percent Bi, 20 to 40 percent Cu, 15 to 35 percent Fe, 20 to 40 percent S, and up to 10 percent SiO_2. Other types of concentrates, precipitate copper, copper and zinc refinery residues, smelter reverts, dust, and chopped scrap are also treated in the reactor. Special blending of concentrates and drying are not required. Noranda has indicated that the maximum levels of impurity elements smelted are not limited by the process per se, but rather by recycle practice, workplace considerations (primarily pertains to arsenic exposures to personnel), and electrolytic refining practice. Based on these considerations, Noranda has established two sets of impurity limits, corresponding to two modes of operation of the smelter (see Table 3-16). Condition I pertains to the removal of some of the process dusts for separate treatment and to the use of local ventilation systems on matte tapping and slag skimming locations. Condition II pertains to the removal of anode furnace slag and additional dust from the process for separate treatment and also to additional purification of the electrolyte during electrolytic refining. For higher levels of As, Sb, and Bi, Noranda suggests concentrate pretreatment before smelting.

3.5.7 Conclusions

Previous conclusions regarding the applicability of electric furnaces for processing high-impurity feeds remain unchanged; i.e., electric furnaces are considered technically demonstrated for processing high-impurity materials.

The Noranda process, operated for the production of blister copper directly, has been found to lead to increased anode and cathode

---

*No documented experience has been identified with regard to smelting calcines in Noranda reactors, although Noranda has indicated that it believes it to be feasible.[142]

TABLE 3-16. MAXIMUM IMPURITY LEVELS RECOMMENDED FOR THE NORANDA PROCESS (MATTE PRODUCTION MODE)[141]

Mode of Operation	Maximum concentration of impurity in concentrate feed, percent				
	As	Sb	Pb	Zn	Bi
I	0.25	0.04	1 to 2	5 to 7	0.04
II	1	0.1 to 0.2	10	10	0.1 to 0.2

copper impurity levels when processing only trace quantities of arsenic, antimony, and bismuth impurities. Hence, it is concluded that this technology would not be a feasible alternative to reverberatory or electric furnaces for processing feed materials containing elevated impurity levels.

The remaining technologies--Outokumpu flash furnaces, Inco flash furnaces, the Mitsubishi process, and Noranda reactors (matte-production mode)--all show some experience processing high-impurity feed materials. A summary of the experience reported by each respective company is shown in Table 3-17.

Experience accumulated with the Mitsubishi process indicates that the levels of two impurities, arsenic and zinc, are higher than the limits specified in the current definition of high-impurity feeds. However, the levels processed are not considered to differ substantially from these limits. Also, as reported by Biswas and Davenport,[134] the process may not be suitable for high-impurity materials in general because of the potential for increased impurity levels in the blister copper.

The Inco flash smelting process shows experience processing high levels of arsenic and antimony. However, because only bench-scale tests have been made, this technology is not considered demonstrated for processing high impurity materials.

The Outokumpu flash smelting process has been used to smelt high levels of lead and zinc impurities (although the lead concentration, at 5 percent, is not substantially different from the current high-impurity threshold for this element). Because only pilot-scale tests were made, however, the Outokumpu process is also not considered demonstrated for processing high impurity materials.

The Noranda process operated for the production of high-grade matte shows full-scale experience processing high levels of arsenic, lead, and zinc. However, to process feeds containing impurity concentrations exceeding significantly the limits specified in the definition of high-impurity feeds implies operation according to Operating Mode II (see Table 3-16), which requires increased electrolyte purification

TABLE 3-17. SUMMARY OF EXPERIENCE PROCESSING HIGH-IMPURITY FEEDS[a] IN ALTERNATIVE SMELTING TECHNOLOGIES[b]

Company	Furnace/ process type	Nature of test or experience	Maximum level of impurity in feed, weight percent				Reference
			As	Sb	Pb	Zn	
Outokumpu	Flash	Pilot-scale	N/A	N/A	5	10	139
Inco	Flash	Bench-scale	1.0	0.3	--[c]	--[c]	131
Mitsubishi	Mitsubishi	N/A	0.33	--[c]	--[c]	6.1	140
Noranda	Noranda[d]	Commercial scale	1	--[c]	8	10	141

[a]By definition, feeds containing more than 0.2 percent As, or 0.1 percent Sb, or 4.5 percent Pb, or 5.5 percent Zn.

[b]Other than reverberatory or electric furnaces.

[c]Maximum levels reported were below the "High-Impurity" limits.

[d]Operated for the production of high-grade matte (70 to 75 percent Cu).

during electrolytic refining. Also, use of the Noranda process would lead to a mixed dust containing arsenic and lead (from the reactor itself), which could complicate impurity recovery. As indicated previously, current practice involves segregation of these two impurities during the smelting process for subsequent recovery. For these reasons, the Noranda process operated for the production of high grade matte is not considered to be a viable option for processing high-impurity feed materials in this analysis.

The combination of sulfidizing, roasting and flash-furnace smelting shows potential as an option for processing feeds containing high levels of arsenic and antimony, although the sulfidizing-roast process is not yet demonstrated. The sulfidizing-roast process could conceivably be used to reduce the volatile impurity level of the feed to those levels processed by flash smelters. This process would allow the segregation of arsenic into an arsenic-rich dust from which arsenic could be recovered. Because sulfur removal by the process is fairly high, however (30 to 40 percent), it is possible that, for some feeds, insufficient sulfur would be present after roasting to produce a low-grade matte during flash smelting.

3.6 BASELINE EMISSIONS

The baseline control level is that level of emission control that is required at the source under consideration in the absence of a revised NSPS. This level is determined from an examination of all pertinent regulations. Baseline requirements are discussed here for both process and fugitive sources.

3.6.1 Process Sources

The baseline control level for most new process sources is given by the existing NSPS regulation. For example, new roasters, converters, and smelting furnaces--with the exception of reverberatory furnaces processing high-impurity feeds--are subject to control by double-contact acid plants, or the equivalent. Under the NSPS, reverberatory furnaces processing high-impurity feeds are exempted from control of both SO_2 and particulate matter.

The SIP regulations for each state having active copper smelters are pertinent to defining the regulatory baseline for new reverberatory furnaces processing high-impurity feeds. Regulations governing sulfur dioxide emissions are presented in Table 3-18, and those governing particulate matter emissions are presented in Table 3-19.

In the case of both sulfur dioxide and particulate matter, many States have different regulations for new and existing smelters. Considering the regulations for new smelters alone, three States--Arizona, which has 7 smelters; Washington, which has a smelter processing high-impurity feeds; and Tennessee--adopted the existing NSPS regulation. Nevada and New Mexico require the removal of 90 percent of the feed sulfur for all new smelters, which corresponds to the requirement that approximately 82 percent of the SO_2 in the offgases from a new reverberatory furnace be controlled.* SO_2 regulations adopted by Utah and Texas appear to be tailored to the existing smelters in these States. The State of Michigan does not specify regulations for SO_2.

Since the majority of the existing smelters are located in States which have adopted the NSPS for new smelters, the baseline for SO_2 control for new reverberatory furnaces processing high-impurity feeds is assumed to be the NSPS (which in effect is no control) for the purpose of this analysis.

---

*Assuming the greenfield smelter operated similarly to ASARCO-Tacoma, the feed sulfur balance (uncontrolled) would be as follows:[143] multihearth roaster offgases--20 percent; reverberatory offgases--28 percent; converter offgases--47 percent; fugitives--4 percent; and reverberatory slag--1 percent. Under the existing NSPS, the roaster and converter streams would likely be controlled by double-contact acid plants, which have an efficiency of ~98.5 percent. Hence, the level of feed sulfur removal achieved would be 1 + (0.985)(20) + (0.985)(47) = 67 percent. To meet the State requirement, however, an additional 90 - 67 = 23 percent of the feed sulfur must be removed. Assuming that all of the additional requirement is supplied from the reverberatory stream (i.e., none of the fugitive sulfur is controlled), the level of control required on the reverberatory would be (23/28) × 100 = 82 percent.

TABLE 3-18. SULFUR/SULFUR DIOXIDE EMISSION LIMITATIONS BY STATE

State	Sources addressed by regulations	Emission limitations	Notes	References
Arizona	New primary copper smelters	40 CFR 60, Subpart P is adopted	Reverberatory furnaces processing high impurity feeds are exempted from SO_2 regulations.	Reference 144, Arizona Air Regulations, Part R9-3-814.
	Existing primary copper smelters	10 percent of feed sulfur	Determined from weighted average (by feed sulfur) of feed sulfur removal required for each of the 7 smelters by the September 20, 1979, Arizona Multipoint Rollback (MPR) SIP revision.	Reference 145.
Michigan	--	--	No regulation could be found.	Reference 144, Michigan Air Regulations.
Nevada	New copper smelters	10 percent of feed sulfur	--	Reference 144, Nevada Air Regulations, Article 8.
	Kennecott Copper Corporation, White Pine County	10,150 lb/hr SO_2 (6-hour average). May be raised to 29,000 lb/hr on approval.	Effective date of this regulation has been indefinately delayed. (Reference 2).	Reference 144, Nevada Air Regulations, Article 14, and 40 CFR 52.1475.
New Mexico	New smelters	10 percent of feed sulfur	Phelps Dodge-Hidalgo is considered to be a new source in New Mexico	Reference 144, New Mexico Air Regulations, Part 652.
	Existing nonferrous smelters	3,550 lb/hr (24-hour average)	Effective 12/31/82.	Reference 144, New Mexico Air Regulations, Part 652.

(continued)

Table 3-18. (continued)

State	Sources addressed by regulations	Emission limitations	Notes	References
Tennessee	New primary copper smelters	40 CFR 60, Subpart P is adopted	Reverberatory furnaces processing high impurity feeds are exempted from SO_2 regulations.	Reference 144, Tennessee Air Regulations, Part 1200-3-16-21.
	Existing copper smelters	100 ppm from copper smelters, 500 ppm from sulfuric acid plants	Regulation evidently written for Cities Service--Copperhill, which is atypical among copper smelters.	Reference 144, Tennessee Air Regulations, Part 1200-3-19-19.
Texas	Primary copper smelters	6,000 ppm (b.v.) for reverberatory furnaces, 650 ppm (b.v.) for sulfuric acid plants and all other processes.	--	Reference 144, Texas Air Regulations, Part 131.04.01.016.
Utah	Kennecott copper smelter	6,030 lb/hr (6-hr average)	--	40 CFR 52.2335(d).
Washington	New primary copper smelters	40 CFR 60, Subpart P is adopted.	Reverberatory furnaces processing high impurity feeds are exempted from SO_2 regulations.	Reference 144, Washington Air Regulations, Part WAC 173-400-115.
	ASARCO-Tacoma smelter	10 percent of feed sulfur	--	Reference 146.

TABLE 3-19. PARTICULATE EMISSION LIMITATIONS BY STATE

State	Sources addressed by regulations	Emission limitations	Notes	References
Arizona	New primary copper smelters	40 CFR 60, Subpart P is adopted	No particulate regulations are specified for reverberatory furnaces processing high impurity feeds.	Reference 144, Arizona Air Regulations, Part R9-3-814.
	Existing primary copper smelters	$E = 3.59\ P^{0.62}$ for $P \leq 30$ tons/hr $E = 17.31\ P^{0.16}$ for $P > 30$ tons/hr	P = process feed rate in tons/hr, E = particulate emissions in lb/hr.	Reference 144, Arizona Air Regulations, Part R9-3-515B.
Michigan	General sources	$E = 4.10\ P^{0.67}$ for $P \leq 30$ tons/hr $E = 55.0\ P^{0.11} - 40$ for $P > 30$ tons/hr	Units of P and E same as above.	Reference 144, Michigan Air Regulations, Part 3.
Nevada	Primary nonferrous smelters	1,300 lb/hr solid particulate matter 2,100 lb/hr total particulate matter	--	Reference 144, Nevada Air Regulations, Article 7.
New Mexico	New nonferrous smelters	0.03 gr/dcf	--	Reference 144, New Mexico Air Regulations, Part 506.
	Existing nonferrous smelters	0.05 gr/dcf for reverberatory furnaces.* 0.05 gr/dcf for acid plants and reverberatory feed dryers.	*Effective 12/31/82.	Reference 144, New Mexico Air Regulations, Part 506.

(continued)

TABLE 3-19. (continued)

State	Sources addressed by regulations	Emission limitations	Notes	References
Tennessee	New primary copper smelters	40 CFR 60, Subpart P is adopted.	No particulate regulations are specified for reverberatory furnaces processing high impurity feeds.	Reference 144, Tennessee Air Regulations, Part 1200-3-16-21.
	Existing sources (general)	$E = 4.10\ P^{0.67}$ for $P \leq 30$ tons/hr $E = 55.0\ P^{0.11} - 40$ for $P > 30$ tons/hr	P = process feed rate in tons/hr, E = particulate emissions in lb/hr.	Reference 144, Tennessee Air Regulations, Part 1200-3-7.
Texas	General sources, except certain steam generators	E = 0.048q0.62	q = stack effluent rate in acfm, E = particulate emissions in lb/hr.	Reference 144, Texas Air Regulations, Reg. I, Chapter 3.
Utah	Kennecott Copper Corporation Smelter, Salt Lake County	364 lb/hr	Annual average for smelter main stack.	Reference 144, Utah Air Regulations, Part 3.2.1.
Washington	New primary copper smelters	40 CFR 60, Subpart P is adopted	No particulate regulations are specified for reverberatory furnaces processing high impurity feeds.	Reference 144, Washington Air Regulation, Part WAC 173-400-115.
	General process sources	0.10 gr/dscf	--	Reference 144, Washington Air Regulations, Part WAC 173-400-060.

With regard to particulate matter, the existing NSPS regulation does not address control requirements. However, new reverberatory furnaces processing high-impurity feeds are expected to be subject to regulations at least as stringent as those pertaining to existing smelters. Based on the regulations in Table 3-19, particulate control requirements for existing furnaces range from a low of about 56 percent (in Nevada) to a high of about 98 percent (in New Mexico and Utah). For purposes of this analysis, the baseline for particulate control for new reverberatory furnaces processing high-impurity feeds is taken to be the statewide average of about 91 percent.

3.6.2 Fugitive Sources

Regulations governing fugitive emissions of SO_2 and particulates include the arsenic regulation of the Occupational Safety and Health Administration (OSHA), and SIP's.

The OSHA arsenic standard limits occupational exposure to inorganic arsenic to 10 $\mu g/m^3$, averaged over an 8-hour period. As of February 1982, exposure in various job classifications at ASARCO-Tacoma, ASARCO-El Paso, ASARCO-Hayden, Kennecott-McGill, and Kennecott-Garfield exceeded the limit. To reduce exposures, OSHA is requiring that local ventilation/hooding be installed (or upgraded, if already in place) on the following fugitive emission sources: roaster calcine discharge, matte tapping, and slag skimming.[147] Converters are required to install secondary hooding. Approximate compliance dates are April 1984 for converter secondary hoods, and June 1985 or later for all other local ventilation systems.[147]

Of the five smelters affected, feeds processed by the Kennecott-Garfield smelter are believed to contain the lowest quantity of arsenic--approximately 0.14 percent. It is assumed for this analysis that all new smelters processing feeds containing in excess of this amount will thus be required to install local ventilation/hooding systems on roaster calcine discharge, matte tapping and slag skimming operations, and converters.

For all copper smelters, independent of arsenic levels, the SIP regulations are believed to impose similar requirements for fugitive

emissions control. The Multipoint Rollback (MPR) regulations adopted by the State of Arizona pertain to stack emissions. However, each source is required to demonstrate that fugitive emissions will not lead to violations of the National Ambient Air Quality Standards (NAAQS). As yet, existing smelters have not been able to make this demonstration. In this analysis, it is assumed that these smelters will be found to be in violation of the NAAQS as a result of fugitive emissions and will be forced to implement capture systems (on roaster calcine discharge, matte tapping, slag skimming, and converters) coupled with dispersion to achieve compliance. Furthermore, it is assumed that all other smelters will also be required to implement similar fugitive controls as a result of future revision to their SIP's. Hence, it is projected that new smelters would likewise be subjected to such controls on the fugitive sources under consideration.

3.7 REFERENCES

1. Edwards, J., and P. Robbins. Guide to Non-Ferrous Metals and Their Markets. London, Kogan Page Limited, 1979. p. 96.

2. Pennebaker, E. N. Copper Minerals, Ores, and Ore Deposits. In: Copper--The Science and Technology of the Metal, Its Alloys and Compounds, Butts, A. (ed.). American Chemical Society Monograph Series. New York, Reinhold Publishing Co., 1954. p. 21-62.

3. Field Surveillance and Enforcement Guide for Primary Metallurgical Industries. U.S. Environmental Protection Agency. Research Triangle Park, N.C. Publication No. EPA 450/3-73-002. December 1973. p. 175-180.

4. Letter and attachments from Henderson, J. M., ASARCO, to Goodwin, D. R., U.S. Environmental Protection Agency. January 11, 1982. p. 1. Response to Section 114 letter on primary copper smelters.

5. Letter and attachment from George, J. W., Cities Service Company, to Goodwin, D. R., U.S. EPA. Feb. 4, 1982. Response to Section 114 letter.

6. Letter and attachment from Maksym, J. W., Copper Range Company, to Goodwin, D. R., U.S. EPA. August 18, 1981. Response to Section 114 letter.

7. Arsenic Emissions from Primary Copper Smelters--Background Information for Proposed Standards, Preliminary Draft. U.S. Environmental Protection Agency. Research Triangle Park, North Carolina. Publication No. EPA-450/_____. p. 3-2.

8. Letter and attachments from Malone, R. A., Kennecott Minerals Co., to Goodwin, D. R., U.S. EPA. December 23, 1981. Response to Section 114 letter.

9. Telecon. Clark, T. C., Research Triangle Institute, with Bennett, K. C., Phelps Dodge Corporation. October 13, 1982. Phelps Dodge Plant Capacities.

10. Reference 4, p. 13.

11. Biswas, A. K., and W. G. Davenport. Extractive Metallurgy of Copper. New York, Pergamon Press, 1980. p. 71.

12. Reference 4, p. 2.

13. Institute for Copper. Air Pollution Caused by Copper Metallurgy in Bor, Volume II--Multilevel roasters. Bor, Yugoslavia. June 1975. p. 115-118.

14. Carpenter, B. H. Nonferrous Smelter Studies: Theoretical Investigation of Role of Multihearth Roaster Operations in Copper Smelter Gas Blending Schemes for Control of SO_2. Environmental Science and Technology. 12:57-62. January 1978.

15. Reference 11, p. 74.

16. Weisenberg, I. J., and R. C. Hill. Design, Operating, and Emission Data for Existing Primary Copper Smelters (Draft). Pacific Environmental Services. Santa Monica, CA. EPA Contract No. 68-02-2606. March 1978. p. 2-91.

17. Reference 11, p. 83.

18. Reference 11, p. 83-84.

19. Boldt, J. R. Jr., and P. Queneau. The Winning of Nickel. Longmans Canada Limited, Toronto, Canada, 1967. p. 230.

20. Reference 7, p. 3-11.

21. Reference 7, p. 3-12.

22. Weisenberg, I. J., and J. C. Serne. Design and Operating Parameters for Emission Control Studies: Phelps Dodge Ajo Copper Smelter. U.S. Environmental Protection Agency. Research Triangle Park, N.C. Publication No. EPA-600/2-76-036f. February 1976. p. 8.

23. Reference 4, p. 16.

24. Reference 11, p. 139.

25. Reference 11, p. 141-142.

26. Reference 11, p. 142.

27. Reference 11, p. 138.

28. Reference 16, p. 2-144.

29. Reference 11, p. 140.

30. Reference 11, p. 156.

31. Background Information for New Source Performance Standards: Primary Copper, Zinc, and Lead Smelters--Volume 1: Proposed Standards. U.S. Environmental Protection Agency. Research Triangle Park, N.C. Publication No. EPA-450/2-74-002a. October 1974. p. 3-49.

32. Reference 11, p. 157.

33. Antonioni, T. N., T. C. Burnett, C. M. Diaz, and H. C. Garven. Inco Oxygen Flash Smelting of Copper Concentrate. Inco Metals Company, Toronto, Ont. (Presented at the British Columbia Copper Smelting and Refining Technologies Seminar. Vancouver. November 5, 1980.) 40 p.

34. Letter and attachments from Garven, H. C., Inco Metals Company, to Vervaert, A. E., U.S. Environmental Protection Agency. May 18, 1982. Comments on draft Chapters 3-6 of the BID.

35. Letter and attachments from Cahill, L. G., ASARCO, to Bowerman, L. J., U.S. Environmental Protection Agency. October 27, 1980. Response to questions regarding changes to be made at the Hayden smelter.

36. Telecon. Clark, T. C., Research Triangle Institute, with Garven, H. C., Inco Metals Company. July 6, 1982. Response to questions on oxy-fuel smelting and Inco oxygen flash smelting.

37. Reference 11, p. 161.

38. Reference 11, p. 164.

39. Reference 11, p. 159.

40. Reference 11, p. 167.

41. Reference 16, p. 2-46.

42. Moriyama, K., T. Terayama, T. Hayashi, and T. Kimura. The Application of Pulverized Coal to the Flash Furnace at Toyo Smelter. In: Copper Smelting--An Update, George, D. B. and J. C. Taylor (eds.) New York, American Institute of Mining, Metallurgical, and Petroleum Engineers, Inc. 1981. p. 201-212.

43. Reference 11, p. 160.

44. Letter and attachment from Scanlon, M. P., Phelps Dodge Corporation, to Goodwin, D. R., U.S. Environmental Protection Agency. October 18, 1978. Response to questions on the Phelps Dodge-Hidalgo smelter. p. 9.

45. Reference 11, p. 210.

46. Reference 31, p. 3-81.

47. Reference 31, p. 3-82.

48. Johnson, R. E., N. J. Themelis, and G. A. Eltringham. A Survey of Worldwide Copper Converter Practices. In: Copper and Nickel Converters, Johnson, R. E., (ed.). New York, American Institute of Mining, Metallurgical, and Petroleum Engineers. 1979. p. 12A.

49. Reference 48, p. 10A.

50. Reference 4, p. 17.

51. Reference 4, p. 18.

52. Reference 31, p. 3-89.

53. Lenoir, P. J., J. Thiriar, and C. Coekelbergs. Use of Oxygen Enriched Air at the Metallurgie Hoboken-Overpelt Smelter. In: Advances in Extractive Metallurgy and Refining, Jones, M. J. (ed.). London, The Institution of Mining and Metallurgy. 1971. p. 379.

54. Trip Report. Carpenter, B. H., J. Wood, and C. Clark, Research Triangle Institute with Tittes, A. F., and T. Larsen, Inspiration Consolidated Copper Company. February 19, 1981. Familiarization Plant Visit.

55. Reference 16, p. 2-149.

56. Reference 11, p. 242.

57. Reference 7, p. 3-17.

58. Reference 11, p. 244-245.

59. Reference 11, p. 243.

60. Reference 11, p. 245.

61. Trujillo, A. D, R. G. Kindel, O. I., Gonzalez, and S. N. Sharma. Fire Refining Practice at Chino Mines Division of Kennecott Copper Corporation. The Metallurgical Society of AIME. Warrendale, PA. Paper No. A-79-36. 1979. p. 7.

62. Miller, H. J. The Fire Refining of Copper. In: Copper--The Science and Technology of the Metal, Its Alloys and Compounds, Butts, A. (ed.). New York, Reinhold Publishing Corporation. 1954. p. 297.

63. Letter and attachment from Nelson, K. W., ASARCO, to Cuffe, S. T., U.S. Environmental Protection Agency. May 19, 1982. Comments on draft Chapters 3-6 of BID. p. 7-8.

64. Bigley, A. C., Jr. Impurity Distribution and Control in Copper Smelters and Refineries. The Metallurgical Society of AIME. Warrendale, PA. TMS Paper No. A78-67. 1978. P. 3.

65. Reference 11, p. 224.

66. Dayton, S. Utah Copper and the $280 Million Investment in Clean Air. Engineering and Mining Journal. 180:72-83. April 1979.

67. Trip Report. Carpenter, B. H. and Wood, J. P., Research Triangle Institute with Templeton, F., Heaney, R., and Taylor, S., Kennecott Minerals Co. May 6, 1981. Familiarization Plant Visit.

68. Suzuki, T. The Mitsubishi Process--Operation of Semi-Commercial Plant. In: The Future of Copper Pyrometallurgy, Diaz, C. (ed.). Santiago, The Chilean Institute of Mining Engineers. 1974. p. 107.

69. Nagano, T., and T. Suzuki. Commercial Operation of Mitsubishi Continuous Copper Smelting and Converting Process. In: Extractive Metallurgy of Copper, Volume I, Yannopoulos, J. C., and Agarwal, J. C. (eds.). The Metallurgical Society of AIME. Baltimore, Port City Press. 1976. p. 439-457. 3.2.6

70. Amsden, M. P., R. M. Sweetin, and D. G. Treilhard. Selection and Design of Texasgulf Canada's Copper Smelter and Refinery. Journal of Metals. 30:16-26. July 1978.

71. Compilation of Air Pollutant Emission Factors. U.S. Environmental Protection Agency. Research Triangle Park, N.C. Publication No. AP-42. August 1977. p. 7.3-2.

72. Cassady, M. E., OSHA Health Response Team. Comments on draft Chapter 3 of the background information document for revision of the NSPS for primary copper smelters. Received June 7, 1982. p. 3-47.

73. Reference 7, p. 3-32.

74. Reference 11, p. 161.

75. Letter and attachments from Judd, L. R., Phelps Dodge Corporation, to Cuffe, S. T., U.S. Environmental Protection Agency. November 3, 1981. Transmittal of process information pertinent to emissions testing.

76. Reference 7, p. 3-38.

77. Reference 7, p. 3-39.

78. Pacific Environmental Services. Development of Fugitive Emission Factors for Primary Copper Smelters. U.S. Environmental Protection Agency. Research Triangle Park, N.C. Contract No. 68-02-3060. December 1981. 40 p.

79. Reference 78, p. 2.

80. Reference 78, p. 3.

81. Reference 44, p. 9, 18.

82. Boggs, W. B., and J. N. Anderson. The Noranda Smelter. American Institute of Mining, Metallurgical, and Petroleum Engineers Transactions. 106:165-201, 1933.

83. Telecon. Clark, T. C., Research Triangle Institute, with Lee, L. V., Dorr-Oliver, Inc. December 18, 1981. Increasing fluid-bed roaster capacity.

84. Mulholland, L. E., and D. J. Nelson. Operation of the Fluo-Solids Roaster at Kennecott's Ray Mines Division. In: Copper Metallurgy, Erlich, R. P. (ed.). New York, The Metallurgical Society of AIME. 1970. p. 141-145.

85. Blair, J. C. Fluo-Solids Roasting of Copper Concentrates at Copperhill. In: Pyrometallurgical Processes in Nonferrous Metallurgy, Anderson, J. N., and P. E. Queneau (eds.). New York, Gordon and Breach. 1967. p. 55-65.

86. Telecon. Clark, T. C., Research Triangle Institute, with Johnson, R. E., Phelps Dodge Corporation. August 7, 1981. Industry expansion options.

87. Reference 4, p. 8.

88. Itakura, K., T. Nagano, and J. Sasakura. Converter Slag Flotation--Its Effect on Copper Reverberatory Smelting Process. Journal of Metals. 21:30-34. July 1969.

89. Achurra H., J., R. Espinosa G., and L. Torres J. Improvements in Full Use of Oxygen in Reverberatory Furnaces at Caletones Smelter. TMS Paper No. A77-91. Metallurgical Society of AIME. 1977.

90. Reference 11, p. 134.

91. Queneau, P. E., and R. Schuhmann, Jr. Metamorphosis of the Copper Reverberatory Furnace: Oxygen Sprinkle Smelting. Journal of Metals. 31:12-15. December 1979.

92. Saddington, R., W. Curlock, and P. Queneau. Tonnage Oxygen for Nickel and Copper Smelting at Copper Cliff. Journal of Metals. 18(4):440-452. April 1966.

93. Reference 11, p. 135.

94. Eastwood, W. B., J. S. Thixton, and T. M. Young. Recent Developments in the Smelting Practice of Nchanga Consolidated Copper Mines, Rokana Smelter. TMS Paper No. A71-75. Metallurgical Society of AIME. 1971.

95. Gibson, N. The Application of Oxygen in a Copper Smelter. Journal of the South African Institute of Mining and Metallurgy (Transvaal). 74:303-311. March 1974.

96. Kupryakov, Y. P., et al. Operation of Reverberatory Furnaces on Air-Oxygen Blasts. Tsvetnye Metally, (English Translation). 10:13-16. February 1969.

97. Kupryakov, Y. P., and N. I. Artemiev. The Use of Oxygen in Reverberatory Furnaces in USSR Smelters. In: The Future of Copper Pyrometallurgy, Diaz, C. (ed.). Santiago, The Chilean Institute of Mining Engineers. 1974. p. 193-197.

98. Goto, M. Green-Charge Reverberatory Furnace Practice at Onahama Smelter. In: Extractive Metallurgy of Copper, Volume I, Yannopoulos, J. C., and J. C. Agarwal (eds.). The Metallurgical Society of AIME. Baltimore, Port City Press. 1976. p. 154-167.

99. Schwarze, H. Oxy-Fuel Burners Save Energy at El Teniente's Caletones Smelter. World Mining. 30:58-61. May 1977.

100. Blanco, J. A., T. N. Antonioni, C. A. Landolt, and G. J. Danyliw. Oxy-Fuel Smelting in Reverberatory Furnaces at Inco's Copper Cliff Smelter. Inco Metals Company, Copper Cliff, Ontario. (Presented at 50th Congress of the Chilean Institute of Mining and Metallurgical Engineers. Santiago. November 23-29, 1980.) 16 p.

101. Telecon. Clark, T. C., Research Triangle Institute, with Garven, H. C., Inco Metals Company. July 9, 1982. Matte grade considerations with oxy-fuel smelting.

102. Successful Tests Encourage Phelps Dodge to Modify its Copper Smelter. Chemical Engineering. 89(3):18-19. February 8, 1982.

103. Telecon. Clark, T. C., Research Triangle Institute, with Chen, W. J., Phelps Dodge Corporation. May 28, 1982. Oxy-sprinkle smelting technology.

104. Telecon. Massoglia, M. F., Research Triangle Institute, with Henderson, J. M., ASARCO. June 25, 1982. Comments on Chapters 3-6 of the BID.

105. Reference 63, p. 13.

106. Reference 11, p. 118.

107. Letter from Henderson, J. M., ASARCO, to Clark, T. C., Research Triangle Institute. August 4, 1982. Clarification of comments on Chapters 3-6 of the BID. p. 3.

108. Weisenberg, I. J., T. Archer, F. M. Winkler, T. J. Browder, and A. Prem. Feasibility of Primary Copper Smelter Weak Sulfur Dioxide Stream Control. U.S. Environmental Protection Agency. Cincinnati, OH. Publication No. EPA-600/2-80-152. July 1980. p. 28.

109. Newton, J., and C. L. Wilson. Metallurgy of Copper. New York, John Wiley and Sons, 1942. p. 82.

110. Reference 107, p. 1.

111. Telecon. Clark, T. C., Research Triangle Institute, with Garven, H. C., Inco Metals Company. March 30, 1982. Sidewall cooling considerations with oxy-fuel burners.

112. Reference 4, p. 6.

113. EPA Action May Lead to New Copper Smelter at Chino. Big Sky Paydirt. #16:57-58.

114. Telecon. Clark, T. C., Research Triangle Institute, with Persson, J. A., Lectromelt Corporation. August 6, 1981. Increasing electric furnace capacity.

115. Trip Report. Carpenter, B. H., J. Wood, and C. Clark, Research Triangle Institute, with Shaw, M. F., and A. S. Gillespie, Phelps Dodge Corporation Hidalgo Smelter. February 17, 1981. Familiarization plant visit.

116. Juusela, J., S. Harkki, and B. Andersson. Outokumpu Flash Smelting and Its Energy Requirement. In: Effic. Use Fuels Metall. Ind. Symp. Pap. Chicago, Inst. Gas Technol. 1974. pp. 555-575.

117. Trip Report. Clark, T. C., Research Triangle Institute, Vervaert, A. E., and F. Clay, U.S. Environmental Protection Agency, with Winslow, R. L, J. Brandt, and W. J. Chen, Phelps Dodge Corporation Hidalgo Smelter. August 25, 1981. Pretest survey visit.

118. Telecon. Clark, T. C., Research Triangle Institute, with Weddick, A. J., Kennecott Copper Corporation. August 19, 1981. Noranda Reactors.

119. Reference 4, p. 3.

120. Reference 48, p. 1-32.

121. Reference 7, p. 3-5.

122. Letter and attachment from Henderson, J. M., ASARCO, to Clark, T. C., Research Triangle Institute. February 23, 1982. Response to questions on blister and anode copper impurity levels.

123. Letter and attachments from Loughridge, K. D., ASARCO, to Goodwin, D. R., EPA. October 9, 1975. Response to Section 114 letter on primary copper smelters.

124. Reference 4, Attachment 1.

125. Paulson, D. L., W. Anable, W. L. Hunter, and R. S. McClain. Smelting of Arseniferous Copper Concentrate in an Electric-Arc Furnace. U.S. Bureau of Mines. Washington, D.C. Report of Investigations 8144. 1976. 30 p.

126. Reference 4, p. 21.

127. Reference 7, p. 3-24.

128. Reference 4, p. 27.

129. Tuovinen, H., and P. Setala. Removal of Harmful Impurities from Iron, Copper, and Cobalt Concentrates and Ores. The Metallurgical Society of AIME. Warrendale, PA. TMS Paper No. A82-4. 20 p.

130. Letter from Henderson, J. M., ASARCO, to Clark, T. C., Research Triangle Institute. August 13, 1982. Response to questions on impurity elimination. p. 4.

131. Victorovich, G. S., C. Diaz, and J. Raskauskas. Impurity Distributions, Dusting and Control of Matte Grade in Inco Oxygen Flash Smelting. Inco Metals Company. Mississauga, Ontario. (Presented at Fiftieth Anniversary Meeting of the Chilean Institute of Mining Engineers. Santiago. November 1980.) 14 p.

132. Trip Report. Clark, T. C., and B. H. Carpenter, Research Triangle Institute, with Garven, H. C., D. C. Lowney, and C. M. Diaz, Inco Metals Company. April 28-29, 1981. Familiarization visit to Inco Metals Company and Copper Cliff smelter.

133. Mackey, P. J., G. C. McKerrow, and P. Tarassoff. Minor Elements in the Noranda Process. Noranda Mines Limited. Noranda, Quebec. (Presented at the 104th Annual AIME Meeting. New York. February 16-20, 1975.) 27 p.

134. Reference 11, p. 237.

135. George, D. B., J. W. Donaldson, and R. E. Johnson. Minor Element Behavior in Copper Smelting and Converting. In: World Mining and Metals Technology, Vol. I, Weiss, A. (ed.). Baltimore, Port City Press. 1976. p. 534-549.

136. Telecon. Clark, T. C., Research Triangle Institute, with George, D. B., Kennecott Minerals Company. July 27, 1982. Impurity elimination during converting.

137. Reference 4, p. 22.

138. Mohri, E., and M. Yamada. Recovery of Metals from the Dusts of Flash Smelting Furnace. In: World Mining and Metals Technology, Vol. I., Weiss, A. (ed.). Baltimore, Port City Press. 1976. p. 520-531.

139. Letter and attachments from Harkki, S., Outokumpu Oy, to Clark, T. C., Research Triangle Institute. April 22, 1981. Response to questions on Outokumpu flash furnaces.

140. Letter and attachment from Sukekawa, I., Mitsubishi Metal Corporation, to Clark, T. C., Research Triangle Institute. October 13, 1981. Response to questions on the Mitsubishi process.

141. Letter from Mackey, P. J., Noranda Mines, Ltd., to Clark, T. C., Research Triangle Institute. June 1, 1982. High impurity feed processing experience with the Noranda process.

142. Letter from Mackey, P. J., Noranda Mines, Ltd., to Clark, T. C., Research Triangle Institute. May 26, 1982. Comments on Chapters 3-6 of the draft BID.

143. Weisenberg, I. J., and J. C. Serne. Design and Operating Parameters for Emission Control Studies: ASARCO, Tacoma, Copper Smelter. U.S. Environmental Protection Agency. Research Triangle Park, NC. Publication No. EPA-600/2-76-036K. February 1976. 30 pp.

144. Sections 201-556, State Air Laws. Environmental Reporter. Bureau of National Affairs, Inc., Washington, D.C.

145. Memorandum from Crow, S. F., EPA Region 9 Administrator, to Bennett, K. M., EPA Assistant Administrator for Air, Noise, and Radiation. October 29, 1981. Congressional Request for Smelter Information.

146. Memorandum from Rathbun, R. A., EPA, to Pratapas, J., U.S. Environmental Protection Agency. December 21, 1981. Smelter Information.

147. Telecon. Clark, T. C., Research Triangle Institute, with Cassady, M., OSHA Health Response Team. February 3, 1982. Engineering control requirements under the OSHA arsenic regulations.

4. EMISSION CONTROL TECHNIQUES

4.1 GENERAL

This chapter describes and evaluates emission control techniques applicable in the primary copper smelting industry to reduce sulfur dioxide (SO_2) and particulate matter emissions to the atmosphere, including both primary process effluents and fugitive emissions.

For primary process effluents, controlling "weak" SO_2 streams from reverberatory smelting furnaces is the primary topic discussed. Control techniques assessed for possible application include the following:

- Contact sulfuric acid plants of the "dry gas" type.
- Calcium-based flue gas desulfurization systems.
- Ammonia-based flue gas desulfurization systems.
- Magnesium-based flue gas desulfurization systems.
- Flue gas desulfurization systems based upon a citric acid--sodium citrate buffer.

The discussion of contact sulfuric acid plants consists of a summary (Section 4.2.1), a general discussion of the contact process for producing sulfuric acid (Section 4.2.2), a discussion of sulfuric acid plant design and operating considerations (Section 4.2.3), and a summary of sulfuric acid plant performance capabilities (Section 4.2.4).

The assessments of the various flue gas desulfurization (FGD) processes are presented in Sections 4.3.2 through 4.3.5, each of which contains the following:

- A summary of the technical feasibility of applying each process to reverberatory furnace offgases.
- A general discussion of the unit operations involved in each process.
- A detailed discussion of the design and operating considerations involved in each process.
- A discussion of the operational problems known to be associated with each process.
- A survey of operating experience for each process.
- A discussion of the applicability of each process to reverberatory furnace offgases.

Section 4.3.6 presents general conclusions regarding the reliability and performance of the various FGD systems discussed.

Section 4.4 describes several methods for increasing the SO_2 strength of reverberatory smelting furnace offgases. These methods, all of which involve modifying furnace operation, are summarized as follows:

- Elimination of converter slag return (Section 4.4.1)
- Sealing points of leakage (Section 4.4.2)
- Preheating combustion air (Section 4.4.3)
- Operation at lower air-to-fuel ratios (Section 4.4.4)
- Predrying wet charges (Section 4.4.5)
- Oxygen enhancement techniques (Section 4.4.6).

Section 4.4.6.1 presents detailed discussions of a number of oxygen enhancement techniques, and Section 4.4.6.3 presents conclusions regarding the technical feasibility of these techniques for possible domestic applications.

Section 4.5 discusses blending of reverberatory furnace offgases with strong SO_2 streams from other smelter processes. Gas blending is assessed as a means by which to allow autothermal processing of "weak" streams in contact sulfuric acid plants. Gas blending is analyzed for two scenarios:

- A new smelter that process high impurity ore concentrates (Section 4.6.1).
- Existing smelters that undergo physical or operational changes to achieve a greater production capacity (Section 4.6.2).

The former necessarily assesses the technical aspects of partial and total weak-stream blending, while the latter assesses partial blending of the weak stream, i.e., blending enough of the weak stream to ensure that postexpansion SO_2 emissions are at or below the preexpansion SO_2 emission level.

This chapter also assesses the control of particulate matter emissions associated with reverberatory smelting furnace effluents. Sections 4.6.2, 4.6.3 and 4.6.4 consider venturi scrubbers, fabric filters (baghouses), and electrostatic precipitators (ESP's), respectively.

Finally, Section 4.7 describes techniques used to control fugitive SO_2 and particulate matter emissions from sources within primary copper smelters. Both local and general ventilation techniques are considered. Sections 4.7.4, 4.7.5, and 4.7.6 discuss control of fugitive emissions from roasting, smelting, and converting operations, respectively. Section 4.7.7 summarizes visible emissions data for fugitive emissions sources within primary copper smelters.

4.2 SULFURIC ACID PLANTS

4.2.1 Summary

The contact sulfuric acid process involving the catalytic oxidation of SO_2 to SO_3 is the most widely used process for removing SO_2 from primary copper smelter effluent gases.[1] Sulfuric acid plants can be designed to process feed streams that contain only a fraction of a percent of SO_2; however, practical limitations have usually restricted application to gas streams that contain at least 3.5 percent SO_2. Metallurgical single-stage and dual-stage absorption sulfuric acid plants constructed in the past have commonly been designed to operate autothermally on feed streams that contain 3.5 and 4.0 percent SO_2, respectively. It is technically feasible, however, to design acid plants that will operate autothermally on feed streams that exhibit SO_2 concentrations below the 3.5 to 4.0 percent range. Estimates have

indicated that lowering the autothermal requirement for a dual-stage absorption acid plant from 4.0 to 3.5 percent SO_2 would increase the plant's installed capital cost by 8 to 13 percent. Similarly, the installed capital cost of a single-stage absorption plant would increase 4 to 7 percent if the autothermal requirement were lowered from 3.5 to 3.0 percent SO_2. (See Appendix F for supporting calculations.)

Large fluctuations in feed stream volumetric flow rate and SO_2 concentration may adversely affect sulfuric acid plant operation at copper smelting facilities. Fluctuations of either type tend to lower the conversion of SO_2 to SO_3, thus decreasing sulfur recovery and increasing SO_2 emissions to the atmosphere. Generally, acid plants are designed to accommodate the highest volume of gas anticipated as well as the lowest expected gas stream SO_2 concentration. This is done to facilitate autothermal operation while maintaining a high SO_2 conversion efficiency.

Acid plant operation on copper smelter effluent gases is not possible without adequate gas cleaning before the gases are sent to the contact section of the plant.[2] Gas cleaning involves cooling and removal of particulates. The degree of cooling is sufficient to condense volatilized impurities with subsequent removal by the gas cleaning system. Major problems will result if the gases are not adequately cleaned. Thus, proper design and maintenance of the gas purification system are necessary to minimize these problems.

It is evident that blending multihearth roaster offgases with offgases from other smelter operations to provide an acid plant feedstock can result in the production of contaminated "black" acid. This occurs due to the trace amounts of organic flotation agents that may remain unoxidized after the roasting process. This problem may also exist in cases where fluid-bed roasters are used to effect a partial roast. The presence of contaminants in the product acid reduces its value when compared to the optically clear acid that can be produced from a feed stream that does not contain trace contaminants.

Acid plant vendors typically guarantee maximum emission concentrations of 2,000 ppm for single-stage absorption plants and 500 ppm for dual-stage absorption plants.[3 4] A conversion of approximately 98.5 percent is required to ensure the 500-ppm concentration in the

acid plant effluent. The above-mentioned guarantees take into account the large fluctuations in volumetric flow rate and SO_2 concentration generally encountered at primary copper smelters; however, no allowance is made for increased emissions due to catalyst deterioration that occurs between regularly scheduled catalyst screening operations.[4] During steady state operation, which is practically impossible due to the transient nature of copper smelter effluent gas streams, conversions of 99.8 percent and above are expected in dual-stage absorption plants, while conversions of 98.5 percent and above are expected in single-stage absorption plants.

U.S. Environmental Protection Agency (EPA) source tests indicate that the SO_2 conversion efficiency of metallurgical sulfuric plants depends upon the frequency and magnitude of fluctuations in gas-stream flow rate and SO_2 concentration and upon catalyst deterioration. EPA analyses have indicated, however, that an averaging time of 6 hours and a reference emission level of 10 to 20 percent above the commonly accepted vendor/contractor SO_2 emission guarantees effectively masks normal, short-term fluctuations in SO_2 emissions that occur because of fluctuations in the feed-stream flow rate and SO_2 concentration. Consequently, once an additional allowance of 10 percent is added to account for catalyst deterioration between screenings, a reference emission level 30 percent in excess of that typically guaranteed by the vendors allows for all factors that tend to increase emissions above the vendor's guarantee. This is supported by EPA statistical analyses performed with the above-mentioned source test data. SO_2 emission data from a dual-absorption acid plant processing copper converter offgases were obtained by EPA using a continuous monitoring system. These data indicated that SO_2 emissions from the acid plant can be limited to 650 ppm or less 98.8 percent of the time.

The use of sulfuric acid plants to control SO_2 emissions from primary copper smelters is a well-demonstrated technology. Currently, 12 of the 15 active domestic primary copper smelters produce sulfuric acid from process offgases.

4.2.2 General Discussion

The basic steps involved in the contact process for producing sulfuric acid from SO_2-laden gases are as follows:

- Gas cleaning and conditioning
- Gas drying
- Catalytic oxidation of SO_2 to SO_3
- Absorption of SO_3 into a sulfuric acid solution to form additional sulfuric acid.

These procedures are shown schematically in Figure 4-1. Adequate gas cleaning before the gas stream enters the contact section of the acid plant is essential. Particulate matter and volatilized metals (e.g., impurities present in the feed) must be removed to avoid costly shutdowns and maintenance.[4 5] Generally, the feed gases first enter a weak acid scrubber, where they are cooled to approximately 55° C (130° F) by water evaporation.[2 3 5] The gases are then cooled to about 30° C (85° F) to reduce their water content to the level required to maintain the acid plant water balance. The subsequent cooling is generally accomplished in an additional packed- or tray-type scrubber with liquor coolers in the recirculated weak acid stream. Finally, the gases are passed through electrostatic mist precipitators to remove traces of dust and acid that may remain after cooling. The types of equipment used in the gas purification section of an acid plant may vary somewhat; however, typical installations use scrubbing towers, coolers, and electrostatic mist precipitators as the primary conditioning equipment.[5]

After the gases are cleaned, they must be dried before entering the contact section of the plant. Cleaned gases are dried by contact with 93 percent acid. The cooled, dried gases are then passed through a series of gas-to-gas heat exchangers, where their temperature can be raised to the optimum temperature for the conversion of SO_2 to SO_3. Single-stage absorption acid plants use three or four catalyst stages, which constitute the converter. The clean, dry gases pass through the catalyst beds where the conversion of SO_2 to SO_3 takes place. Because the conversion of SO_2 to SO_3 is exothermic, the heat of reaction

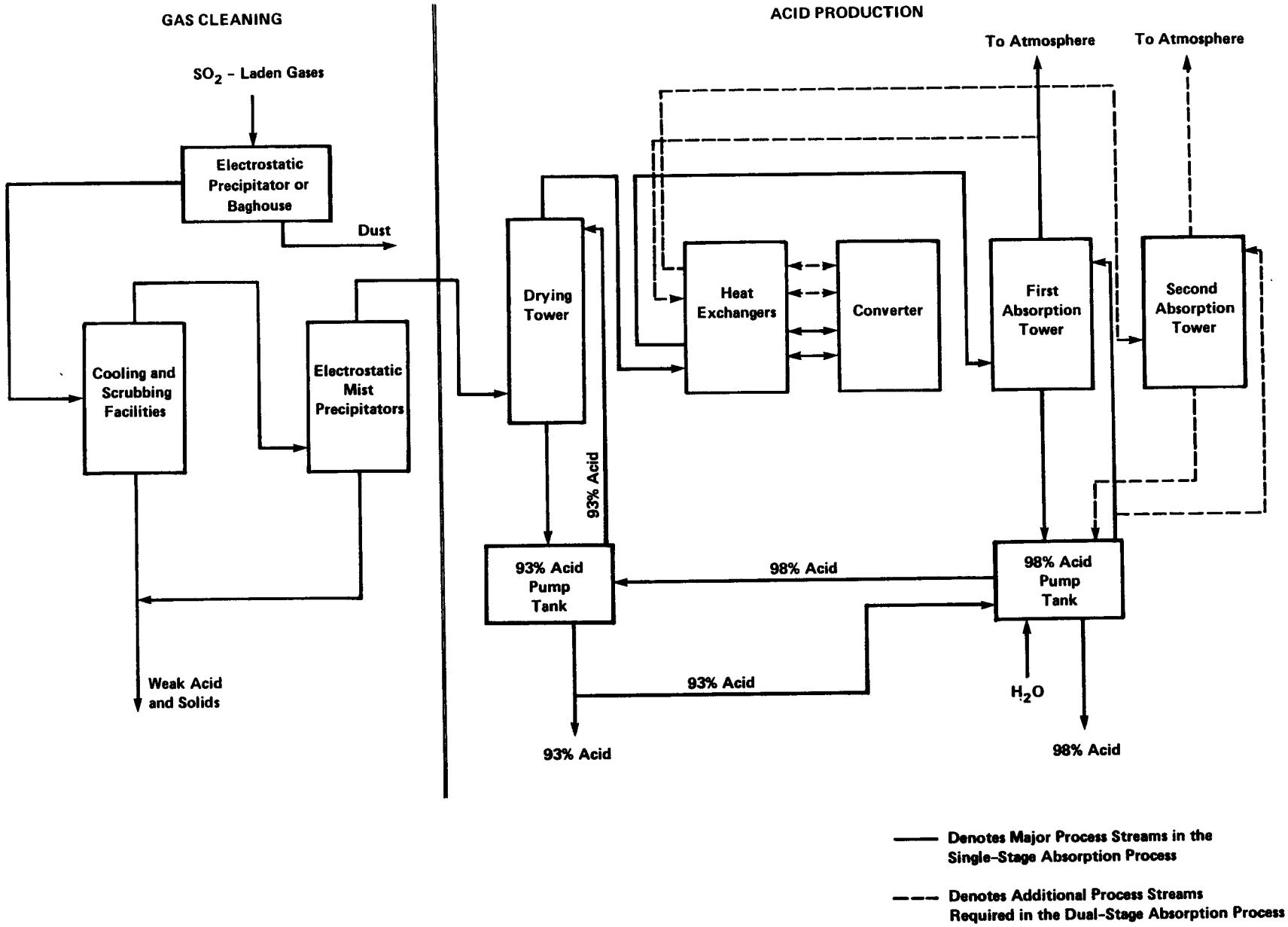

Figure 4-1. Contact sulfuric acid processes.

generated in each catalyst bed must be removed for the optimum conversion temperature to be maintained. This is accomplished by routing the exit gas stream from each catalyst bed through the tube side of the gas-to-gas heat exchangers used to raise the temperature of the incoming gases just prior to their entry into the contact section of the plant. The resultant SO_3-laden stream that exits the converter is then passed to an absorber where the SO_3 is absorbed by strong (slightly over 98 percent) sulfuric acid. Maintaining the absorbing acid at just over 98 percent ensures that the strong acid stream exiting the absorber has a concentration very close to 98 percent.

In a dual-stage absorption plant, the unabsorbed SO_3 and remaining SO_2 in the gas stream are reheated and reintroduced into the converter, where a portion of the remaining SO_2 is converted to SO_3. The gases leaving this second stage of conversion are then passed to the final absorption tower where the SO_3 is absorbed from the gases. The exiting gases are then treated to remove acid mist prior to being vented to the atmosphere.

4.2.3 Design and Operating Considerations

Proper design of the gas purification section of an acid plant is essential in avoiding excessive shutdowns and maintenance. The presence of high levels of solid or gaseous contaminants in copper smelter offgases can present many difficulties in the design of the gas purification system. Generally, these contaminants must be removed before the gas stream enters the contact section of the plant. The offgases contain varying amounts of entrained dust, as well as fumes formed by the vaporization of volatile components.[4] After cleaning, the composition of the acid plant fuel gas is independent of the impurity levels in the concentrate. Contaminants in the offgas stream include compounds of arsenic, cadmium, antimony, and mercury. Copper, lead, and zinc dusts are also commonly entrained in copper smelter offgas streams. Dust and fumes are generally reclaimed for their economic value through the use of cyclones, ESP's, and baghouses. However, in many cases, additional cleaning is required to remove residual quantities of contaminants that would otherwise hinder acid plant operation.

Special design considerations are necessary if the offgases contain appreciable amounts of halogens. If fluorine is present in

the gas stream, two scrubbing towers in series may be required to achieve complete removal.[2 3] Complete flourine removal is necessary to prevent catalyst poisoning in the contact section of the plant. A carbon brick lining must be used for the first scrubber because fluorine will attack the more commonly used acid-proof refractory linings. This scrubber is usually a venturi-style or open-spray-type tower in which the gas stream is quenched to its saturation temperature. The second scrubber is usually a packed- or tray-type tower in which the gases must be cooled to achieve the proper water content for acid production. If the dust and/or fluorine content of the gases is not excessive, both gas cooling and scrubbing can be accomplished in a single packed- or tray-type tower.

Because of the possible presence of halogens, construction materials are important considerations in the proper design of a gas purification system.[3] If halogens are not present in significant quantities, 20-alloy stainless steel is suitable for pumps, valves, and the liquor coolers used to cool the gases to achieve proper water content.[2] However, if appreciable amounts of halogens are present in the gases, this equipment must be constructed of higher alloy steels, graphite, or glass. Another alternative would be to line the equipment with an appropriate plastic. The scrubbing towers usually consist of a carbon steel shell with an impervious membrane and an acid brick lining, although plastic can be used for lining in some areas.

Although halogens and dust are almost completely removed in the scrubbers, some acid mist will remain entrained in the gas stream. Acid mist is formed when small amounts of SO_3 present in the gas stream react with water vapor in the gases to form sulfuric acid mist. Most of the acid mist is condensed in the scrubbers; however, a small portion remains in the gas stream. Sulfuric acid mist generally consists of particles less than 5 μm in diameter that are very difficult to remove from a gas stream except by electrostatic precipitation.[6] Thus, gases exiting the scrubbers--commonly containing 3,530 mg/Nm^3 (1.4 gr/scf) or more of H_2SO_4 as acid mist[3]--are generally routed to two electrostatic mist precipitators placed in series to improve

efficiency and reliability. Mist precipitators, usually constructed of lead, achieve a particulate removal efficiency commonly greater than 99 percent. Gases entering the contact section of the plant should contain only SO_2, O_2, N_2, and H_2O vapor. If the gases are not cleaned sufficiently, the following major problems may result:

- Aggravated corrosion of heat exchangers and carbon steel ducts
- Plugging of catalyst beds
- Partial deactivation of the catalyst
- Production of poor quality acid.

After the gases are dried in the contact section of the plant, they become essentially noncorrosive. Hence, carbon steel ducts can be used for the remainder of the plant. The total pressure drop through a clean, well-maintained dual-stage absorption plant is usually about 0.5 atm (50,660 Pa).[2] Normally, an additional 0.060 to 0.075 atm (6,080 to 7,600 Pa) are added in the design of the main blower to compensate for pressure buildup that may occur in the system.

When multihearth roasters are used, it is not uncommon for trace amounts of organic contaminants to pass through both the gas cleaning section of the plant and the catalyst beds. These contaminants will result in the production of dark, discolored acid ("black" acid). The presence of contaminants in the product acid reduces its value in comparison to the optically clear acid that can be produced from offgases generated by other sources. These trace organic contaminants are produced in multihearth roasters when various organic agents used in the floatation process are vaporized and only partially oxidized. Normally, within fluid-bed roasters, organic flotation agents are completely oxidized, and thus the product acid is free of organic contaminants.[4] An exception occurs when fluid-bed roasters are used to effect a partial roast. In this case, trace amounts of organic flotation agents may not be oxidized due either to the relatively low temperatures involved or to the low concentration of oxygen in evidence during partial roasting. Techniques exist to purify or bleach discolored acid, but they are usually costly and may produce undesirable side

effects. For example, organic contaminants can be oxidized by hydrogen peroxide, although the oxidation is accompanied by the release of water, which dilutes the product acid. However, outlets exist for sulfuric acid that are not sensitive to acid color, such as the production of fertilizers or refinery alkylation processes.[4] One operator reports that some black acid has been sold, after equalization of freight, for $4.00 per ton.[7]

A major consideration in the design of a metallurgical acid plant is the concentration of SO_2 in the acid plant feed gases. Although sulfuric acid plants can be designed to process feed streams that contain only a fraction of a percent of SO_2, economic considerations have limited applications to higher concentrations. Metallurgical sulfuric acid plants constructed in the past were commonly designed to operate autothermally on feed streams containing 3.5 to 4.0 percent SO_2. Single-stage absorption plants are commonly designed to operate autothermally at 3.5 percent SO_2, while dual-stage absorption plants are designed to operate autothermally at 4.0 percent SO_2.[3 4] However, these autothermal operating requirements can be lowered by designing the plants to operate autothermally at lower feed stream SO_2 concentrations. This has not been the practice in the past because the incremental cost of reducing the autothermal requirements rises quite rapidly when SO_2 concentrations below the 3.5 to 4.0 percent range are considered. Thus, a somewhat larger capital investment is required to build sulfuric acid plants that will operate autothermally below the 3.5 or 4.0 percent SO_2 levels. As noted earlier, however, the incremental costs of lowering autothermal requirements by 0.5 percent may not be excessive. (See Appendix F for supporting calculations.)

If acid plants do not operate autothermally, supplemental heat must be supplied to maintain the appropriate conversion temperature in the catalyst beds, thus increasing operating costs. Supplemental heat is generally supplied via gas-fired preheaters that heat the gas stream indirectly prior to entry into the acid plant converter. Since offgas streams from reverberatory smelting furnaces typically exhibit SO_2 concentration in the 0.5- to 2.5-percent range, a dual-absorption plant designed to operate autothermally at 4.0 percent SO_2 would have

to operate its preheater continuously to process such streams, thus increasing the total annual operating cost associated with the acid plant.

The amount of gas cooling required in the gas purification section of the plant depends upon the SO_2 concentration in the inlet gas stream, the concentraction of the product acid, and the plant elevation.[2 3 4] Feed streams that contain less than 4 percent SO_2 frequently require extra cooling to remove excess water vapor. Gas streams containing less than 3 percent SO_2 may require refrigeration to condense enough water to obtain an acceptable water-to-sulfur ratio. Careful control of the gas stream water content is essential in preventing dilution of the product acid below commercial-grade strength.[5]

The oxygen content of the feed gases is also an important consideration in metallurgical acid plant design. Oxygen is generally fed in excess of the amount required by the reaction stoichiometry. Most plants operate at an oxygen-to-sulfur-dioxide ratio (O_2/SO_2) of not less than 1.1.[8] In some cases, when the gas stream has an SO_2 concentration of 9 percent or more, it does not contain sufficient oxygen for the conversion of SO_2 to SO_3. When this occurs, the gas stream must often be diluted with air or other offgases to enhance the oxygen content of the stream.[4]

For maximum operating efficiency, metallurgical sulfuric acid plants should operate on a gas stream of uniform flow rate and composition. Large fluctuations of either type tend to lower the conversion of SO_2 to SO_3, thus decreasing acid production and increasing SO_2 emissions to the atmosphere. Metallurgical acid plants must therefore be designed with the worst possible operating conditions in mind. This objective requires the incorporation of adequate process control technology in the design to allow operators to compensate for variations in SO_2 concentration. Variations in feed stream volume are generally less of a problem than variations in SO_2 concentration and can be tolerated within reasonable limits.[4] The Norddeutsche Affinerie of Hamburg, Germany, operates a dual-stage absorption plant that processes offgases from a Outokumpu flash smelting furnace as well as

offgases from converters. This particular plant was designed to process a feed stream that varies from 76,000 Nm^3/m (2,684,000 scfm) to 200,000 Nm^3/m (7,063,000 scfm) while maintaining a stack concentration of not more than 500 ppm SO_2. This demonstrates the ability of contact sulfuric acid plants to handle rather large fluctuations in the feed-stream volume. Generally, acid plants are designed to accommodate the highest volume of gas anticipated as well as the lowest expected gas-stream SO_2 concentration. This is done to facilitate autothermal operation while maintaining a high SO_2 conversion efficiency.

Because capital and operating costs are directly related to the gas volume to be handled, a design that will significantly reduce the volume of gas in the plant will have a major effect on both cost factors.[8 9] The most cost-effective design will maximize the SO_2 concentration in the feed stream while simultaneously reducing the total gas volume. Section 4.4 contains discussions of several methods that can be used to increase the SO_2 concentration in smelter offgases.

4.2.4 Acid Plant Performance Characteristics

Metallurgical acid plant vendors currently guarantee maximum SO_2 emissions concentrations of 2,000 ppm for single-stage absorption plants and 500 ppm for dual-stage absorption plants.[3 4 10 11] However, these guarantees refer to emissions that occur during new plant performance tests,[4] which are conducted for 3 to 5 consecutive days while the plant is operating, without any malfunctions, on gases that contain the percentages of SO_2 specified in the design basis. In addition, although these guarantees are for maximum SO_2 emissions and thus include inherent allowances for increased emissions due to fluctuations in the inlet SO_2 concentration, they do not include allowances for increased SO_2 emissions due to catalyst or plant deterioration with age. Furthermore, these guarantees are for acid plant performance only and thus do not include emissions to the atmosphere during periods of acid plant shutdown for catalyst screening or replacement or for other acid plant maintenance. One domestic manufacturer of metallurgical sulfuric acid plants guarantees maximum SO_2 emissions of 650 ppm from its dual-stage absorption plants for a period of 1 year after startup.[10] This guarantee assumes continuous operation with no shutdowns. This

particular guarantee obviously includes allowances for increased SO_2 emissions that occur during the 1-year period between startup and the first scheduled catalyst screening.

The degree of catalyst deterioration over a given period of time will depend largely on the levels of impurities present in the feed stream. Table 4-1 presents estimates of the maximum levels of impurities that can be tolerated in smelter offgases to be processed in a sulfuric acid plant. The degree of catalyst deterioration experienced at these various impurity levels can be accommodated by an acid plant that shuts down once per year to screen the catalyst and repair equipment.[4] Table 4-1 also contains the estimated upper levels of impurities that can be removed by typical gas purification systems having prior coarse dust removal. As discussed previously, more elaborate cleaning systems must be designed if the feed stream contains contaminants, such as halogens, that pose special problems. The details of the more elaborate designs vary depending upon the contaminants involved, but, the designs generally involve the use of more efficient dust or mist collectors and the scrubbing of gases with liquids that absorb the contaminants. Although complete removal of impurities from the feed stream is not practical, 99.5 to 99.9 percent overall removal is considered to be attainable.[4]

Because vendor guarantees on SO_2 emissions are commonly based on emissions that occur during new plant performance tests, the effect of catalyst deterioration on SO_2 emissions must be determined to accurately assess acid plant performance capability over time. SO_2 emissions data gathered by simultaneous EPA source testing of the No. 6 and No. 7 single-stage absorption acid plants at the Kennecott Garfield smelter during the period of June 13-16, 1972, indicate that normal catalyst deterioration and differences in acid plant design and technology can result in a 30-percent increase in SO_2 emissions.[13] A summary of this analysis can be found in Appendix G.

At the time of the EPA source testing, the No. 6 (Parsons) plant was in the second month of its 12-month catalyst cleaning cycle, and the No. 7 (Monsanto) plant was in the twelfth and last month of its catalyst cleaning cycle. A statistical analysis of the emissions data

TABLE 4-1. ESTIMATED MAXIMUM IMPURITY LIMITS FOR METALLURGICAL OFFGASES USED TO MANUFACTURE SULFURIC ACID[12]

Substance	Approximate limits (Mg/Nm^3)[a]	
	Acid plant inlet	Gas purification system inlet[b]
Chlorides, as Cl	1.2	125[c]
Fluorides, as F	0.25	25[d]
Arsenic, as As_2O_3	1.2[e]	200
Lead, as Pb	1.2	200
Mercury, as Hg	0.25	2.5[f]
Selenium, as Se	50.0	100
Total solids	1.2	1,000[g]
H_2SO_4 mist, as 100% acid	50.0	-
Water, as H_2O	-	400,000

[a]Basis: dry offgas stream containing 7 percent SO_2.

[b]For a typical gas purification system with prior coarse dust removal.

[c]Must be reduced to 6.0 if stainless steel is used.

[d]Can be increased to 500 if silica products in scrubbing towers are replaced by carbon; must be reduced if stainless steel is used.

[e]Can be objectionable in product acid.

[f]Can be increased to between 5 and 12 if lead ducts and precipitator bottoms are not used.

[g]Can usually be increased to between 5,000 and 10,000 if weak-acid settling tanks are used.

shows that the 30-percent greater average emissions of the No. 7 plant, compared to the average emissions of the No. 6 plant, are statistically significant at the 90-percent probability level. This emissions difference reflects not only catalyst deterioration, but also design or construction differences between the Parsons 1967 acid plant technology and Monsanto 1970 acid plant technology. However, the major portion of this difference is assumed to result from catalyst deterioration.[4]

Although there are no analogous data available for dual-stage plants, metallurgical acid plant vendors have agreed that the EPA estimate of a 30-percent increase in SO_2 emission concentrations as the upper limit for deterioration of catalyst performance between catalyst screenings for single-stage acid plants is also a reasonable estimate for dual-stage acid plants.[5] In most cases, the frequency of catalyst screenings is primarily a function of pressure drop rather than conversion efficiency. Normally, the first catalyst bed is constructed with a depth approximately 50 percent greater than the theoretical design depth to compensate for the anticipated decrease in conversion efficiency as the catalyst becomes partially plugged and the pressure drop increases between catalyst beds.[4] Catalysts are guaranteed for various periods, although longer guarantees require the use of more catalyst for a larger conversion efficiency over time. Screening periods generally vary from 1 to 2 years, depending upon blower capacity and the particulate collection efficiency of the gas purification system.[4]

Analysis of the previously mentioned EPA source tests (full text in Appendix H) at Kennecott Garfield showed SO_2 emissions during normal operations of less than 2,000 ppm when averaged for long periods, such as a week.[13] "Normal" operations were defined by analyzing acid plant operating logs to ascertain when upset conditions, i.e., malfunctions, startups, shutdowns, etc., were in evidence. Significantly, the long-term average SO_2 concentration was considerably less than the emission concentration (2,700 ppm) corresponding to the vendor guarantee of 95 percent conversion at an inlet concentration of 5 percent SO_2.

As mentioned previously, metallurgical sulfuric acid plants operate at maximum efficiency when the feed stream is uniform in flow

rate and composition. However, offgas streams from some copper smelter operations, most notably copper converting, exhibit large fluctuations in both volumetric flow rate and SO_2 concentration. While fluctuations in feed-stream flow rate and SO_2 concentration are widely believed to adversely affect acid plant performance, few data exist to quantify the effect on SO_2 emissions.[4] Further analysis of the Kennecott Garfield data showed that instantaneous SO_2 emission concentrations varied greatly (<1,000 ppm to >7,000 ppm), depending upon fluctuations in the feed-stream SO_2 content (<1 percent to >7 percent). Specifically, when the data were averaged over 4-hour periods, 13 data periods were evident during which the average SO_2 emissions exceeded the vendor's guarantee (2,700 ppm).[13] Increasing the averaging time to 6 hours decreased to seven the number of periods that exceeded the reference emission level (2,700 ppm). Increasing the reference emission level from 2,700 ppm (the vendor's guarantee) to 3,000 ppm (approximately 10 percent greater) reduced the number of periods exceeding the reference emission level by approximately 50 percent. Further increases in either the averaging time or the reference emission level selected for comparison did not significantly decrease the number of periods that exceeded the reference concentration. Further analysis of the same data, based on the actual time during which SO_2 emissions exceeded the reference concentration level, led to the same conclusions. Thus, this analysis, which does not consider catalyst deterioration, shows that an averaging time of 6 hours and a reference emission level 10 to 20 percent above the commonly accepted vendor/contractor SO_2 emission guarantees effectively masks normal, short-term fluctuations in SO_2 emissions.[13]

SO_2 emissions from a dual-absorption sulfuric acid plant operating on copper converter offgases were monitored by EPA through the use of a continuous monitoring system. This testing was performed at the ASARCO, El Paso, Texas, copper/lead smelter from mid-May through November 1973. The data were validated to ensure their accuracy and then analyzed by EPA. The analysis showed that 6-hour averages effectively mask the extreme fluctuations that are encountered with copper

converter offgases. SO_2 emissions were limited to 250 ppm or less 95 percent of the time. However, the inlet SO_2 concentration was rather low, and no catalyst deterioration was detected during the test period. Based upon readings taken at 3-minute intervals, the inlet gas stream SO_2 concentration averaged 3.8 percent SO_2 for the entire test period. Further analysis that took into account a possible 10-percent increase in emissions due to catalyst deterioration and that extrapolated the data to allow for the highest inlet SO_2 concentrations expected from copper, lead, or zinc primary smelting operations (~9 percent SO_2) showed that SO_2 emissions can be limited to 500 ppm or less 95 percent of the time and 650 ppm or less 98.8 percent of the time. A complete analysis of these data is included in Appendix I.

Acid mist emissions from dual-stage absorption sulfuric acid plants are normally less than acid mist emissions from single-stage absorption plants because the mist loading of the second absorption tower is usually less.[4] However, an acid mist eliminator must be installed following the first absorption tower in dual-stage acid plants to protect downstream equipment from corrosion. Absorption towers have inherent lags and are sensitive to many variables, including inlet SO_3 concentration, absorbing acid strength, temperature, and gas stream flow rate. However, currently available control technology is adequate to restrict acid mist emissions to low opacity wisps, except for infrequent upsets.[4] Such upsets are caused when the absorbing acid concentration becomes greater than the azeotropic, thus allowing SO_3 to remain unabsorbed in the gas phase and to eventually create a visible acid mist plume as it combines with water after leaving the stack. When an azeotropic condition exists, there is no "driving force" for mass transfer, i.e., the transfer of SO_3 into the sulfuric acid; thus, the SO_3 remains in the gas phase. Of course, mist eliminators are particulate collection devices and thus cannot prevent acid mist emissions that occur during this type of upset condition because the mist is produced by SO_3 combination with water after the gas stream exits the mist eliminator.

Manufacturers of mist eliminators commonly guarantee collection efficiencies of 99 percent or greater.[14] However, these guarantees are generally based only on the total weight of entrained particulate removed from the gas stream. When guaranteed collection efficiencies are restated as percentages of particles collected by size rather than by weight alone, they generally decrease substantially. Therefore, when a mist elimination device is chosen for a particular application, collection efficiency by particle size and weight should be considered. High-efficiency mist eliminators are available that provide high collection efficiencies (by size and weight) over a large particle size range. Monsanto's E-S Type Mist Eliminator guarantees collection efficiencies (by size and weight) of at least 99 percent over a particle size range of 0.1 μm to 1.0 μm.[14] Guarantees of this magnitude limit maximum stack emissions to 35 mg/m^3 (0.015 gr lb/scf) or less.[4] Lower efficiency models generally ensure emissions of 70 mg/m^3 (0.031 gr lb/scf) or less. Under the worst conditions, the 70 mg/m^3 emission value can represent a 20-percent opaque plume, but normally the emissions from a high-efficiency mist eliminator are less than 10 percent opaque.[4]

The use of sulfuric acid plants to control SO_2 emissions from primary copper smelters is a well-demonstrated technology. Currently, 12 of the 15 active domestic primary copper smelters produce sulfuric acid from process offgases. Of these 12 facilities, 6 use dual-stage absorption plants, and 10 produce acid from roaster and/or converter offgases. The Phelps Dodge facility at Playas, New Mexico, uses a dual-stage absorption plant to produce acid from gases that originate in an Outokumpu flash smelting furnace; at the Inspiration Consolidated copper smelter, offgases from an electric smelting furnace are processed in a dual-stage absorption plant to manufacture acid.

EPA source tests such as those described earlier indicate that the SO_2 conversion efficiency of metallurgical sulfuric plants depends upon the frequency and magnitude of fluctuations in gas stream flow rate and SO_2 concentration, as well as catalyst deterioration. Thus, an SO_2 emission limitation that reflects these factors is appropriate for primary copper smelters. Based upon analyses performed to determine

the effect of fluctuations in gas stream flow rate and SO_2 concentration, a reference emission level of 20 percent higher than that guaranteed by the vendor/contractor and a 6-hour averaging time will effectively mask normal, short-term fluctuations in SO_2 emissions. As noted previously, the upper limit for increased SO_2 emissions due to catalyst deterioration between screenings has been established at 30 percent. However, noting that no catalyst deterioration was detected over a 6½-month testing period at ASARCO's dual-stage absorption plant in El Paso, a 10-percent increase in emissions due to catalyst deterioration has been deemed reasonable for a dual-stage absorption plant over the year between screening operations. Consequently, an emissions limitation based upon a 6-hour average SO_2 emissions concentration 30 percent in excess of that guaranteed by the vendor will reflect variations in gas stream flow rate and SO_2 concentration, as well as the catalyst deterioration that occurs between annual catalyst screenings.

4.3 SCRUBBING SYSTEMS

4.3.1 Background

Historically, there has been little economic incentive to desulfurize process offgases containing SO_2 in concentrations ranging from 0.05 to 3.5 percent. This category includes offgases generated by reverberatory smelting furnaces, as well as offgases generated by fossil-fuel-fired steam generators, refinery sulfur recovery plants, sulfuric acid plants, and lead sinter machines. Prior to the last decade, the control of SO_2 emissions from these sources was practically nonexistent. However, techniques for removing SO_2 from "weak" SO_2 streams have received a great deal of attention over the last 10 to 15 years. Consequently, numerous methods have been devised to remove SO_2 from weak streams.

The approach most commonly used for weak-stream SO_2 control has involved the use of scrubbing systems that chemically react the SO_2 with liquid phase absorbents to yield sulfur compounds that can be either discarded, reprocessed, or sold for direct use in other industries. The term "scrubbing system" is commonly used to describe such systems, since a scrubber (absorber) is used to effect the required pollutant mass transfer.

The three major types of scrubbing systems can be summarized as follows:

- Noncyclic systems--These open-loop systems generate a throw-away product. The scrubbing liquor makes only one pass through the scrubber.

- Cyclic nonregenerative systems--These closed-loop systems produce a sulfur-containing compound that is either discarded or sold. As much of the scrubbing liquor as possible is recovered and recycled through the scrubber.

- Cyclic regenerative systems--These closed-loop systems recover SO_2 and have a relatively small waste product for disposal. The absorbent is regenerated and the scrubbing liquor is recycled through the scrubber.

For applications to weak streams from reverberatory furnaces, consideration must be given to the fact that reverberatory furnace effluents contain a wide variety of contaminants in addition to SO_2. The presence of high concentrations of oxygen (relative to O_2 concentrations commonly encountered in gases generated by fossil-fuel-fired generating plants), particulates, acid gases, metallic fumes and high gas temperatures must be carefully considered, especially where cyclic absorption systems are being considered. In most scrubbing systems, some type of offgas conditioning would be required prior to the absorption of SO_2 in the scrubbing media.

Over the past decade, several scrubbing schemes using various absorbents have been applied to metallurgical weak streams on either a pilot- or full-scale basis. Two types of scrubbing systems have been applied to reverberatory furnace offgases on a full-scale basis. One is a calcium-based system that uses a lime/limestone slurry as the scrubbing medium, and the other is a magnesium-based system that uses a magnesium oxide slurry as the scrubbing medium. The calcium-based system is a cyclic nonregenerative type; the magnesium-based system is a cyclic regenerative type. Both systems are located at the Onahama smelter in Japan. Other scrubbing systems applied to metallurgical weak streams on either a pilot- or full-scale basis are citrate-type systems and ammonia-based systems. Discussions of the four above-mentioned types of scrubbing systems are presented in the following sections.

4.3.2 Calcium-Based Scrubbing Systems

4.3.2.1 Summary. Calcium-based scrubbing systems have been demonstrated for the control of SO_2 emissions from fossil-fuel-fired power plants since the 1930's. During the last 10 years, applications to metallurgical offgas streams have also been demonstrated. In the United States, a calcium-based scrubbing system has been controlling a weak SO_2 stream (<0.6 percent) from a molybdenum ore roaster since 1972.[4] During the period 1977-1980, this system maintained a sulfur removal efficiency in excess of 96 percent. Operation of this particular system at the Duval Corporation near Tucson, Arizona, has also demonstrated the feasibility of operating a calcium-based system in an area where water is scarce.

Perhaps the most significant application of calcium-based scrubbing technology to occur on metallurgical processes over the past few years has been the system installed at the Onahama smelter in Japan in late 1972. This system controls a portion of a weak SO_2 stream that originates from three green-charged reverberatory furnaces. Both system reliability and SO_2 removal efficiency are reported to be high.[16]

It has been demonstrated for some time that calcium-based scrubbing systems are viable control methods for gas streams with low SO_2 concentrations (500 to 5,000 ppm). However, the lime/limestone system at Onahama was the first system to fully demonstrate control of a weak SO_2 stream from reverberatory furnaces. Experience at Onahama has also demonstrated that meticulous furnace control can maintain a relatively steady SO_2 concentration in the weak stream.[6 16] Also, because the SO_2 removal efficiency of these systems increases as the gas-stream SO_2 concentration decreases, effective ($\geq$90 percent) removal of SO_2 from offgases generated by calcine-charged reverberatory furnaces should be possible. However, to handle the fluctuations in gas stream SO_2 concentration inherent in calcine-charged furnace operation, the scrubbing system will have to include a well-designed process control system capable of reacting to sudden changes in the gas-stream SO_2 concentration. Considering the range of SO_2 concentrations encountered in calcine-charged operations (0.4 to 2.0 percent SO_2), providing the adequate process control should be quite feasible.

4.3.2.2 General Discussion. Calcium-based scrubbing systems may be of two types: noncyclic or cyclic-nonregenerative. In the noncyclic system, the absorbent passes through the scrubber on a once-through basis. Early work on this type of system was conducted by the London Power Company in the 1930's;[4 17] alkaline Thames River water provided the absorbent. The system removed a high percentage of the SO_2 (about 90 percent), but the acidic effluent from the process lowered the pH of the Thames to an undesirably low level. The noncyclic system has inherent water pollution problems in some situations that would preclude its use on a large scale. This system also has the drawbacks of requiring a very large amount of water and of cooling the gas to an unduly low temperature.

Also in the 1930's, technology was developed on cyclic-nonregenerative scrubbing systems that employed calcium-based absorbents. The two most widely accepted cyclic-nonregenerative, calcium-based scrubbing systems employ either calcium carbonate (limestone) or calcium hydroxide (slaked lime) as the absorbent. Simplified flow diagrams for the lime/limestone slurry scrubbing processes are presented in Figure 4-2. The principal process steps are as follows:

- SO_2 absorption
- Demisting
- Liquor loop operation
- Lime/limestone handling operations.

SO_2 absorption occurs when the SO_2-laden process offgases are vented to a scrubber, where they are scrubbed countercurrently with the absorbent slurry.

The chemistry of the absorption step is quite complicated. As many as 28 chemical equations have been postulated by some authorities to characterize the reactions involved. The following rather simple mechanism is thought to be representative of the reactions that occur:[5]

I. Scrubber Addition of Limestone

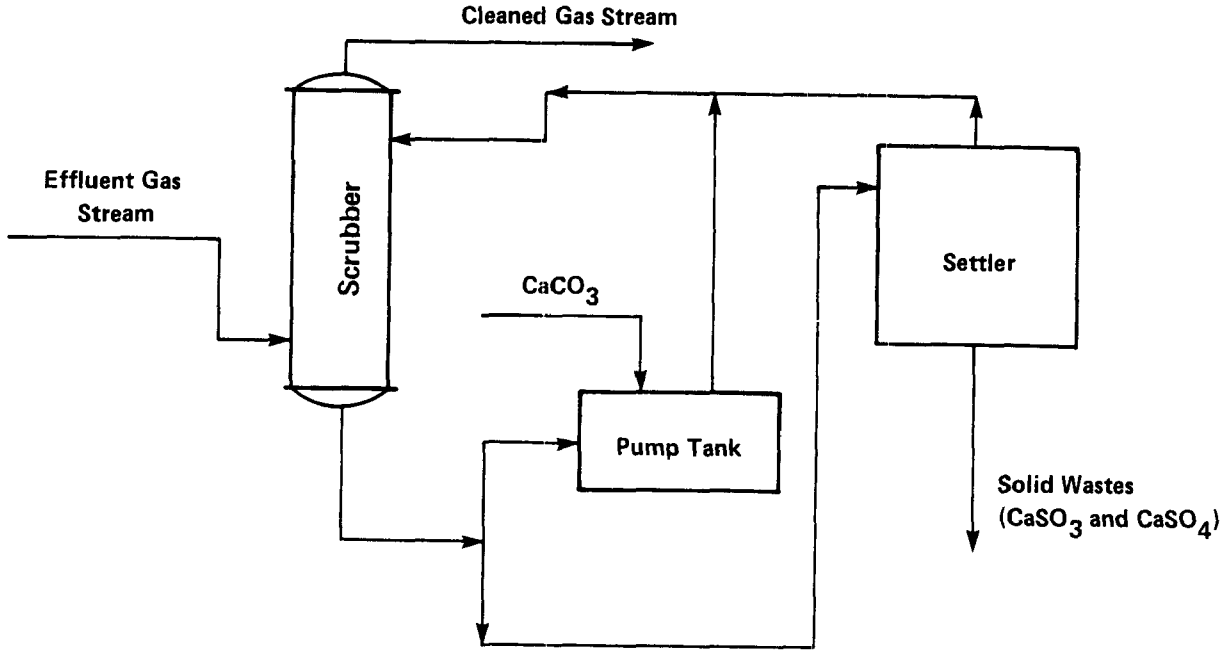

II. Scrubber Addition of Lime

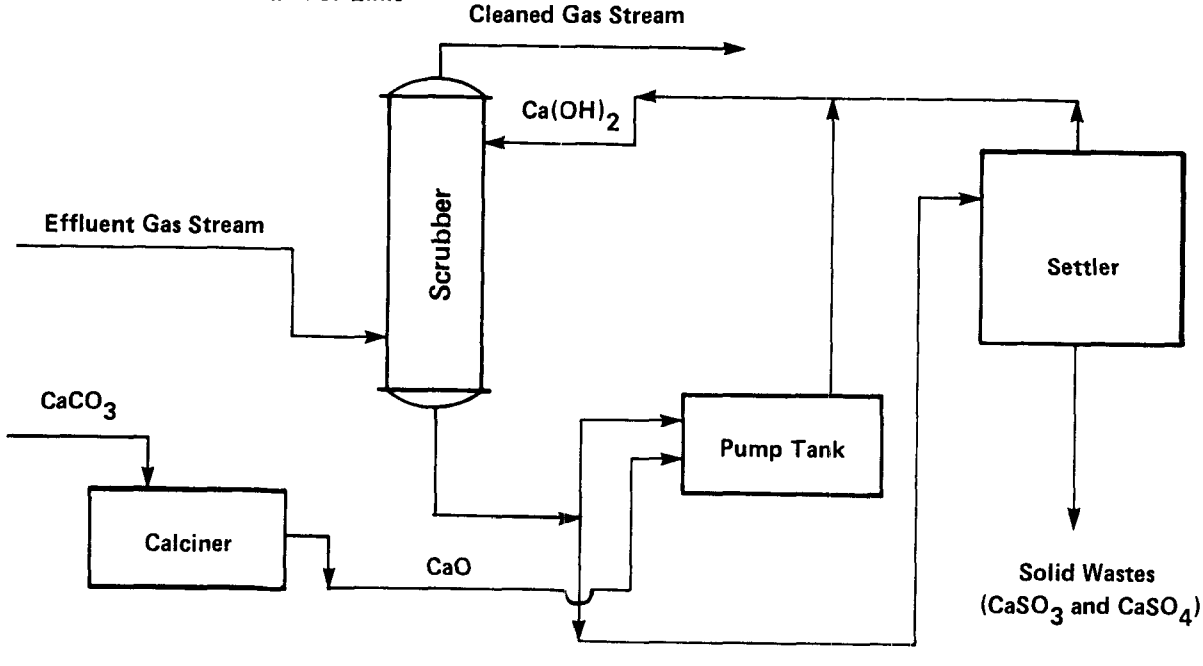

Figure 4-2. Calcium-based scrubbing processes.

$$SO_2 + H_2O \rightleftarrows H^+ + HSO_3^-$$

$$H^+ + CaCO_3 \rightleftarrows Ca^{+2} + HCO_3^-$$

$$Ca^{+2} + HSO_3^- + \tfrac{1}{2}H_2O \rightleftarrows CaSO_3 \cdot \tfrac{1}{2}H_2O + H^+$$

$$H^+ + HCO_3^- \rightleftarrows H_2O + CO_2 \quad .$$

Some of the calcium sulfite formed will oxidize to form calcium sulfate as follows:

$$CaSO_3 + \tfrac{1}{2}O_2 \rightarrow CaSO_4 \quad .$$

The reactions that take place within the absorbers are heterogeneous in nature because they involve the gas, liquid, and solid phases present. The scrubbed gases are then trapped in a chevron mist eliminator, which is washed with clear water to prevent the escape of acidic droplets to the atmosphere. The resultant gas stream is then vented to the atmosphere. Liquor loop operation involves splitting the SO_2-laden slurry, with a portion going to the pump tank and a portion going to the settler. If the limestone scrubbing process is used, calcium carbonate is added to the pump tank as makeup; if the lime scrubbing process is used, calcium oxide is added as makeup. Effluent from the pump tank and settler is recycled to the scrubber in both types of processes. In most cases, solids in the pregnant slurry (calcium sulfite [$CaSO_3$] and gypsum [$CaSO_4$]) are removed in the settler and pass to disposal. It is possible, however, to oxidize the slurry to create a solid product that consists almost entirely of gypsum. This is normally done when the gypsum can be sold, as is the case at the Onahama smelter in Japan. Limestone-handling operations consist of field storage and transfer of mined limestone to a milling and sizing plant for preparation. If the lime scrubbing process is to be used, the limestone must be calcined onsite to calcium oxide, or lime must be purchased directly instead of limestone.

Limestone is the absorbent chosen in most cases. Although not as reactive as lime, it is less costly. In some areas the cost of lime as CaO is twice or more than that of limestone.[18] For applications in the utilities industry, where high-sulfur coals are involved, the

cost differential between the two absorbents becomes such a major item that it usually outweighs the advantages commonly associated with lime, namely slightly lower capital costs, higher SO_2 removal efficiency, a lower liquid-to-gas flow (L/G) requirement, and probable higher reliability.[18] In the western part of the country, however, where most primary copper smelters are located, relatively long shipping distances reduce the cost differential, because limestone ($CaCO_3$) weighs nearly twice as much as lime (CaO). Thus, for potential applications to smelters in the western United States, an economic analysis would determine the most cost-effective absorbent.

4.3.2.3 Design and Operating Considerations. Several factors may significantly affect the SO_2 removal efficiency of limestone scrubbing systems. These may be summarized as follows:

- Design of the scrubber proper
- Type and size of the limestone used
- Inlet gas temperature
- pH of the absorbent slurry
- Solids content of the absorbent slurry.

The design of the scrubber is critical to the limestone scrubbing process. SO_2 removal efficiency must be maximized by improving the SO_2 gas-phase mass transfer rate at the liquid interface, which is dependent upon the scrubber type selected and its operating parameters. L/G is important because of its effect of reducing the gas-phase resistance to the mass transfer of SO_2. SO_2 removal efficiency is favored by high L/G and low inlet SO_2 concentration.[4 5 18] As the SO_2 concentration in the feed gases increases, removal efficiency will decrease. A fairly high ratio, about 6,700 ℓ/1,000 Nm^3 (50 gal/1,000 scf), has been necessary in most power plant applications to achieve a high degree of SO_2 removal (>80 percent). Generally speaking, the higher the SO_2 concentration in the feed gases, the higher the L/G will have to be to maintain an acceptable SO_2 removal efficiency. Thus, application to reverberatory furnace offgases will require higher L/G's than those in evidence at utility-related installations.

The type and particle size of the limestone used as the absorbent will affect SO_2 removal efficiency as well as determine how efficiently the absorbent is used. The ability of carbonate stones to chemisorb SO_2 varies greatly. For example, calcite ($CaCO_3$) stones have been shown to be superior to dolomite ($MgCO_3$) stones as far a SO_2 removal efficiency is concerned.[4] Calcite stones maintain a consistently high SO_2 removal efficiency until nearly exhausted. The degree to which the limestone is ground will affect the SO_2 absorption capacity of the absorbent slurry. Personnel at the Onahama smelter report that limestone shows nearly as good an SO_2 absorption capacity as slaked lime, $Ca(OH)_2$, if it is ground to minus 325 mesh.[16] Particle size does not appear to be critical when lime is used, apparently because the particle size of most slaked limes is inherently small.[4]

Studies conducted to determine the effect of gas stream temperature on SO_2-removal efficiency indicate that SO_2 removal efficiency decreases linearly as the temperature of the feed gas stream increases.[4] The equilibrium considerations that govern the degree of SO_2 absorption depend upon the partial pressure of SO_2 in the inlet gas stream, which in turn depends upon the inlet gas stream temperature. The partial pressure of SO_2 increases by about 18 percent for a temperature increase of 5.6° C (10° F). If the partial pressure of SO_2 is allowed to increase too much, SO_2 removal efficiency will eventually become zero, and the inlet gas stream will actually begin to strip SO_2 from the absorbent slurry. Thus, in some cases, precooling of the inlet gases may be necessary.

As mentioned above, the degree and rate of SO_2 absorption depend upon the difference between the partial pressure of SO_2 in the gas stream and the vapor pressure of SO_2 above the absorbent slurry. The pH of the absorbent slurry has a distinct effect on the vapor pressure of SO_2 above the slurry, and thus pH can affect the degree of SO_2 removal. The vapor pressure of SO_2 above the absorbent slurry must be kept quite low to provide a driving force for absorption, especially if the SO_2 concentration in the feed gases is low, as in reverberatory

furnace offgases. The effect of slurry pH on the SO_2 equilibrium vapor pressure, $p^*_{SO_2}$, is shown in Figure 4-3. As indicated, the SO_2 vapor pressure is highest at low pH. Control of pH is normally accomplished by adding makeup lime/limestone slurry at the pump tank.[6 17]

High slurry solids loadings provide improved rates of solubility for calcium, thus providing more effective replenishment of the calcium ion.[4] The most efficient SO_2 removal has consistently been obtained with slurry solids loadings of 12 to 15 percent.

4.3.2.4 Operational Problems. Considerable progress has been made in reducing the frequency of operational problems that have tended to reduce the reliability of calcium-based scrubbing systems in the past. Currently, the primary cause of forced outages is mechanical failure of pumps and other operating equipment, while corrosion and erosion are probably the next most significant causes.[18] Chemical difficulties, e.g., scaling, related to the complex system chemistry have also been a source of trouble.

Because of the high L/G requirement, very large pumps are commonly used in calcium-based scrubbing systems. Failures may occur due to the large stresses that must be placed on the pumps. The most common types of failure involve rotary parts and rubber linings.[18] An important aid in maintaining the best possible reliability is a well-planned program of preventive maintenance. Also, spares should be provided wherever feasible, especially for pumps. Simplicity of design is important in areas where frequent maintenance is likely. For this reason, simple spray-type scrubbers are preferred even though they are less efficient than packed- or tray-type absorbers in effecting mass transfer.[18]

Lime/limestone scrubber slurry is both corrosive and erosive in nature. As a result, some system components may require frequent maintenance and/or replacement. Stainless steel is required to prevent corrosion where metal contacts acidic solutions.[5] While a high slurry solids loading tends to enhance SO_2 absorption, it may also increase the rate of erosion within process equipment. Erosion is reduced by applying elastomer linings in pumps, piping, and other surfaces that are subjected to heavy slurry impingement.

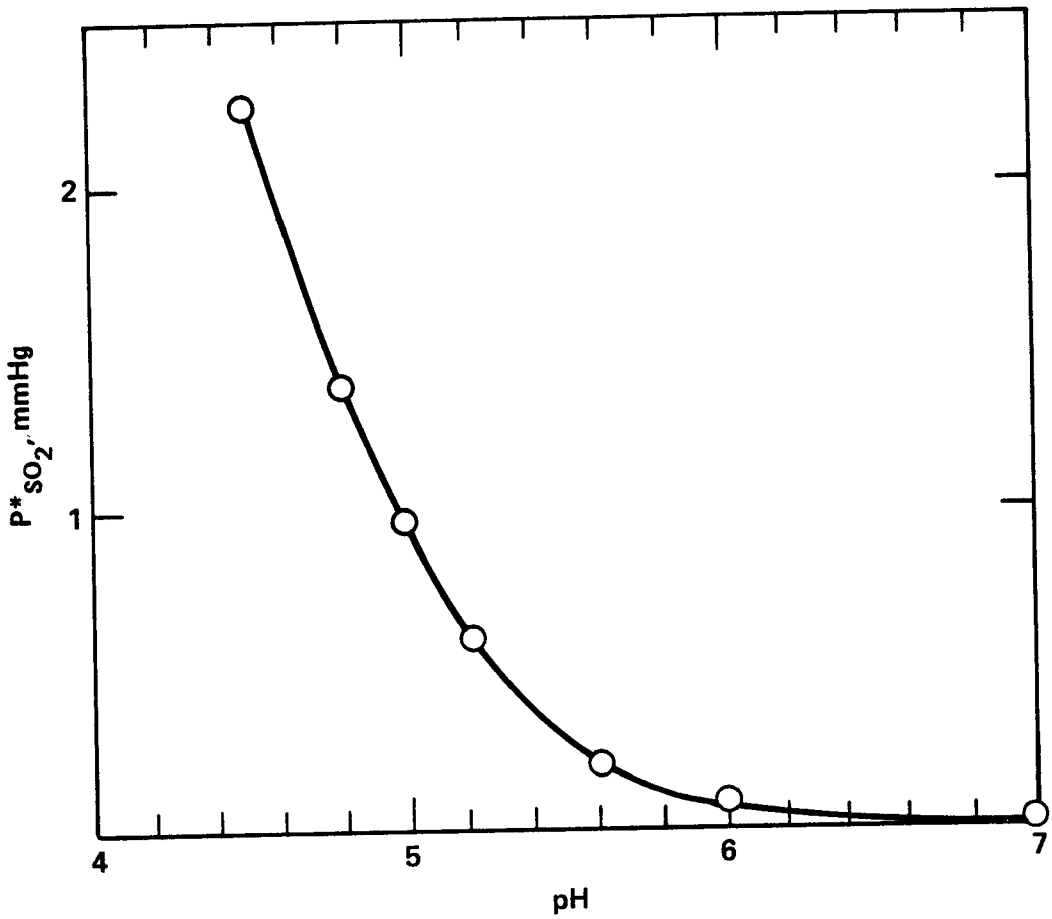

Figure 4-3. Effect of pH of calcium sulfite-bisulfite solution on SO_2 equilibrium vapor pressure.[17]

Solids deposition and the resultant plugging of equipment have been major problems in the operation of calcium-based scrubbing systems. These problems may be especially troublesome in limestone scrubbing systems. The deposition can occur at several locations within the system, namely, at wet/dry interfaces, on scrubber surfaces, in scrubber packing, and in the mist eliminator.[18] Generally, utilities do not analyze the deposited solids; however, solids formed in the absorbers at the Onahama smelter have been analyzed.[16] The results of these analyses are presented in Table 4-2.

Careful control of the slurry pH has been identified as the most critical factor in the prevention of scaling.[6 16] Operating experience at the Onahama smelter has shown that the best operating pH is slightly above 4.[16] If the pH is less than 4, oxidation of calcium sulfite occurs in the scrubbers, resulting in calcium sulfate scale formation. Also, at low pH values, SO_2 removal efficiency may be adversely affected. If the slurry pH is appreciably above 4, calcium sulfite will become insoluble, resulting in calcium sulfite scale formation. A rapid decrease in pH caused by SO_2 absorption followed by a rapid increase in pH due to limestone addition can cause sulfite precipitation on the limestone slurry particles and on the equipment surfaces. This will result in blinding of the reactive surfaces and thus lead to inefficient absorbent use. Consequently, where reverberatory offgases are involved, it is desirable to maintain the slurry pH just above 4 without large fluctuations.

The inlet gas stream temperature also has an effect on scaling. The evaporation of water from the slurry due to high inlet gas stream temperatures will create wet-dry interfaces at which scaling tends to occur.[4]

Prevention of scaling is essential in maintaining stable operation and high SO_2 removal efficiency. Careful pH control coupled with induced desupersaturation of the slurry at a point outside of the scrubbing circuit have been shown to be extremely effective means of minimizing scaling.[16]

TABLE 4-2. COMPOSITION OF SCALE FROM THE ONAHAMA LIME-GYPSUM[a] PROCESS[16]
(Percent)

Sample origin	CaO	$CaSO_4$	$CaSO_3$
Lower zone of No. 1 absorber	33.0	43.8	2.6
Upper zone of No. 2 absorber[b]	34.0	40.6	5.7
Upper zone of No. 2 absorber[b]	34.9	35.7	8.3
Lower zone of No. 2 absorber	36.6	29.3	17.0

[a]Lime was the absorbent used in this process at the time that these analyses were performed.

[b]Repetitive samples from the same origin.

Note: CaO, $CaSO_4$, and $CaSO_3$ were not the only compounds present in the scale; thus the individual analyses do not add to 100 percent.

4.3.2.5 Survey of Operating Experience

4.3.2.5.1 Domestic utility-related applications. The U.S. utility industry has tried many FGD approaches over the past decade. The relative simplicity and lower costs of limestone-based scrubbing systems have made these systems the most popular.[19] Table 4-3 lists the major domestic utility-related FGD installations that employ the limestone scrubbing process. The technology currently preferred by the U.S. utility industry has the following features:[18]

- Simplicity of scrubber design. Single-stage spray scrubbers with a minimum of interior parts are the most frequently used type.
- Low-pressure drop to conserve energy. This is another reason for selecting spray scrubbers.
- High L/G to get adequate mass transfer and to avoid scaling.
- Direct entry of hot gas into the scrubber, with provision to prevent splashback into the inlet duct to avoid wet/dry interface deposition.
- Adequate retention time in the slurry recirculation tank to allow time for the limestone to neutralize sulfurous acid picked up in the scrubber and for dissipation of the sulfate and sulfite supersaturation developed during passage through the scrubber.
- High slurry solids content (12 to 15 percent) in the scrubber loop to provide seed crystals on which dissolved sulfite and sulfate can precipitate.
- High use of limestone to prevent scaling in the mist eliminator. This requires a fairly low pH (4.0 to 5.5) in the circulation tank, which has an adverse effect on SO_2-removal efficiency. To offset this, means to increase the rate of mass transfer are used such as very high L/G, staged scrubbing, or chemical additives.
- Use of simple chevron-type mist eliminators mounted in a horizontal position in the top of the scrubber and washed intermittently with jets of fresh water at relatively high pressure.

Commonwealth Edison's Will County No. 1 station, which started up in February 1972, consists of two identical parallel wet scrubbing systems.[4] Each system consists of a venturi for particulate removal,

TABLE 4-3. MAJOR DOMESTIC UTILITY-RELATED FGD INSTALLATIONS THAT USE THE LIMESTONE-SCRUBBING PROCESS.[19]

Station/unit, Power company	Size (MW)	Startup date	New or retrofit	Percent sulfur in coal	Design SO_2 removal efficiency (percent)
Cholla No. 1 Arizona Public Service	115	10/73	Retrofit	0.4-1	58.5 overall 92 in the absorber
Duck Creek No. 1A Central Illinois Light	400	8/78[a]	New	2.5-3	75
La Cygne No. 1 Kansas City Power & Light	820	2/73	New	5.0	76
Lawrence No. 4 Kansas Power & Light	125	12/68	Retrofit	0.5	76
Lawrence No. 5 Kansas Power & Light	400	11/71	New	0.5	65
Martin Lake No. 1 Texas Utilities	793	10/77	New	1.0	60
Sherburne No. 1 Northern States Power Company	710	3/76	New	0.8	50
Sherburne No. 2 Northern States Power Company	680	9/77	New	0.8	50
Southwest No. 1 Springfield City Utilities	200	4/77	New	3.5	80
Widows Creek No. 8 Tennessee Valley Authority	550	5/77	Retrofit	3.7	80
Will County No. 1 Commonwealth Edison	167	2/72	Retrofit	4.0	82
Winyah No. 2 South Carolina Public Service	280	7/77	New	1.0	70

[a]One module operated from September 1976 to April 1977.

Note: This table presents domestic installations as they existed in 1978.

followed in series by a turbulent contact absorber (TCA) for SO_2 absorption. The SO_2 control system is guaranteed to achieve 80 to 85 percent SO_2 removal.[4 19] This removal efficiency has been achieved; however, operational problems have prevented continuous operation in the past.[4] These problems included demister plugging, nozzle plugging by construction debris, power loss to the pond reclaim pumps, vibration, loosened screens in the pump and in the recirculation tank, reheater plugging, failure of expansion joints, and breakage of the paddle on the slurry tank mixer. However, only the demister plugging problem proved to be chronic, and the solution to the problem involved redesigning the demister washers. Scaling has not been a serious problem with the system.

Kansas City Power and Light's La Cygne Unit No. 1, which began operation in February 1973, has proved to be one of the most reliable large domestic utility FGD systems.[19] The system was designed to achieve a 76-percent SO_2 removal efficiency. The La Cygne unit was plagued with numerous startup problems, most of which were not due to FGD system operation. However, despite the problems at startup, the availability of the system improved steadily. Availability increased from approximately 76 percent in 1974 to about 93 percent in 1977. The actual SO_2 removal efficiency has varied from 70 to 83 percent.[19]

The Northern States Power Company Sherburne County Station No. 1 and No. 2 units have demonstrated excellent reliability. Availability for Unit No. 1, which began operation in March 1976, averaged 85 percent during the first 4 months after startup.[19] Reliability over the subsequent 12-month period was in excess of 90 percent. Unit No. 2 demonstrated availabilities in excess of 95 percent during its first 4 months of operation. Both units were designed to achieve 50 percent SO_2 removal. Actual SO_2 removal efficiencies have been in the 50 to 55 percent range.

Based on the operating experience of domestic utility-related limestone scrubbing systems, sufficient evidence exists to suggest these systems can operate at their design SO_2 removal efficiencies while simultaneously maintaining a high degree of reliability, generally in excess of 90 percent.[19] As suggested by Table 4-3, the

majority of the full-scale utility-related limestone FGD systems in place are not designed to achieve overall SO_2 removal efficiencies in excess of 90 percent. However, no evidence exists to suggest that SO_2 removal efficiencies of 90 percent or greater could not be achieved with lime/limestone systems. In fact, two limestone FGD's have achieved SO_2 removal efficiencies of 90 percent or greater during demonstration runs, while seven lime FGD's have achieved SO_2 removal efficiencies of 90 percent or greater. These units are summarized in Table 4-4.

In summary, the domestic utility-related experience indicates that both high SO_2 removal efficiencies and high system reliabilities are achievable. The critical factors behind the successful operation of these systems are proper system design and maintenance.

4.3.2.5.2 Applications to metallurgical offgases. Lime/limestone scrubbing technology has been applied to metallurgical offgas streams at both foreign and domestic facilities. The Duval Corporation, located near Tucson, Arizona, is operating two four-stage model 500 TCA's to remove SO_2 from offgases generated in molybdenum sulfide roasters.[4] The units, designed by UOP, use lime slurry as the absorbent and are rated at 1,420 Nm^3/min (50,000 scfm) each. The system began operation in July 1971 and experienced extensive problems with scaling and plugging. However, these problems have been overcome and the system is reported to be working well.[18] This system processes offgases containing 0.35 to 0.75 percent SO_2 and generates an offgas stream with an SO_2 concentration of less than 200 ppm.[6] SO_2 removal efficiencies are commonly in excess of 96 percent. Emissions test data for this system are presented in Table 4-5. The successful operation of this system demonstrates that scrubbing systems using water recycle can be successfully operated in areas where water is scarce.

In late 1972, the Onahama Smelting and Refining Company, Ltd., installed a lime-gypsum plant at its Onahama smelter for fixation of SO_2 in green-charged reverberatory furnace offgases. This facility was the first commercial-scale plant of this type in Japan designed to treat smelter offgases containing up to 3 percent SO_2.[16] A flow chart of this system is presented in Figure 4-4. At the Onahama smelter,

TABLE 4-4. LIME/LIMESTONE FGD SYSTEMS THAT HAVE ACHIEVED SO_2 REMOVAL EFFICIENCIES OF 90 PERCENT OR GREATER ON OFFGASES GENERATED BY COAL-FIRED STEAM GENERATORS[19]

Utility company	Station	Unit number	Size (MW)	Nature of application	Type of process	SO_2 removal achieved (%)
Arizona Public Service	Cholla	1	115	Full-scale	Limestone	92
	Four Corners	5	160	Demonstration	Lime	95
Duquesne Light	Phillips	1-6	410	Full-scale	Lime	90+
Louisville Gas and Electric	Cane Run	4	175	Full-scale	Lime	90
	Paddy's Run	6	65	Demonstration	Lime	99.5
Southern California Edison	Mohave	1	170	Demonstration	Limestone	95
	Mohave	2	170	Demonstration	Lime	95
U.S. Air Force	Rickenbacker[a]	1-9	20	Full-scale	Lime	99
Kentucky Utilities	Green River	1-3	64	Full-scale	Lime	90+
Tennessee Valley Authority	Shawnee	10	10	Prototype	Lime/Limestone	95-99

[a]Denotes a military base.

Note: Data in this table reflect the domestic FGD situation in 1977.

TABLE 4-5. SUMMARY OF EMISSION TEST DATA FOR THE DUVAL SIERRITA LIME SCRUBBING SYSTEM, 1977-1980

Source	Year			
	1977	1978	1979	1980
Molybdemum roaster throughput rate (tons/h)	3.50	3.55	3.65	3.50
Particulate matter emission rate (lb/h)	3.83	3.50	4.01	4.01
Allowable particulate matter emission rate (lb/h)	7.81	7.87	11.92	7.81
SO_2 emission rate (lb/h)	11.00	52.60	25.38	88.84
H_2SO_4 emission rate (lb/h)	2.31	9.03	1.91	0.93
Total sulfur emission rate (lb/h)	6.26	61.63	27.29	89.77
Sulfur removal efficiency[a] (percent)	99.80	97.80	99.00	96.50

[a]Arizona State regulations require removal of 90 percent of the sulfur that enters the process as a feed.

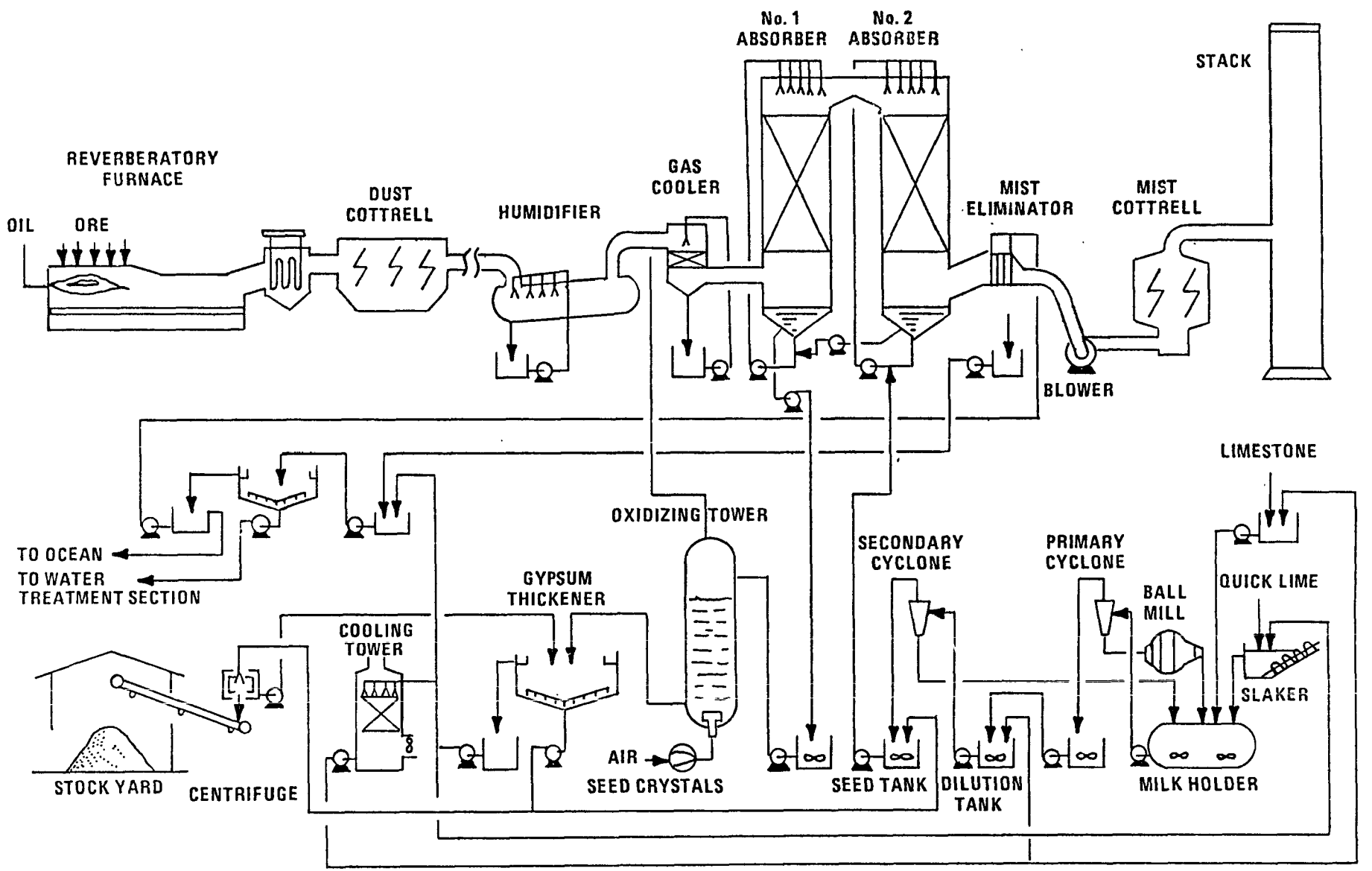

Figure 4-4. Flow diagram of the lime/gypsum plant at the Onahama smelter.[16]

converter gases and a portion of the reverberatory furnace offgases are routed to two acid plants, where approximately 30 Gg (33,000 tons) of 98 percent sulfuric acid are produced per month. The remainder of the reverberatory offgases serve as the feedstock for the gypsum plant. The feed-stream flow rate varies from 1,800 to 2,400 dry m^3/min (63,550 to 84,750 dry ft^3/min) at standard conditions.[20] Initially, only quick lime was used as absorbent. Soon after startup, however, a serious absorber scaling problem evolved. Scaling problems were eventually solved by improving certain process characteristics and operating conditions.[6 16] One important improvement involved the substitution of limestone for a portion of the more expensive quick lime. To minimize scaling, the Onahama system presently uses two stages of absorption in conjunction with the use of seed crystals.

Currently, system reliability is high (~99.3 percent) while an SO_2 absorption efficiency of 99.5 percent is maintained. The average SO_2 emission concentration from the plant is in the 40- to 60-ppm range.[6] Good-quality gypsum suitable for board or cement is produced by the subsequent oxidation of the calcium sulfite produced.[16]

In addition to the full-scale applications discussed above, some pilot-scale tests were conducted by the Smelter Control Research Association, Inc. (SCRA), at the Kennecott smelter located in McGill, Nevada. These tests were performed on reverberatory furnace offgases to investigate the effects of parameters such as L/G and feed-stream SO_2 concentration on SO_2 removal efficiency. Results indicated that SO_2 removal efficiency was highest at low SO_2 inlet concentrations and high L/G ratios.[5]

4.3.2.6 Applicability to Reverberatory Smelting Furnaces.

4.3.2.6.1 Transfer of utility-related scrubbing technology. To assess the feasibility of applying utility-related scrubbing technology to weak SO_2 streams generated by reverberatory smelting furnaces, feed stream characteristics must be compared. There are several differences between the waste gases from power plants and smelters in regards to composition, flow rate, and other characteristics.[18]

The average SO_2 content of reverberatory furnace offgas streams would be higher than the average SO_2 concentration in power plant effluents. The concentration of SO_2 in reverberatory furnace offgases is typically in the range of 0.5 to 2.5 percent.[4] Generally, 1.5 percent is taken to be the average value, which is about four times the highest level found in the flue gas from coal-fired boilers.[18]

Utility-related scrubbing experience,[18] along with pilot studies performed on reverberatory furnace offgases,[5] indicate that operation at high SO_2 removal efficiencies becomes progressively more difficult as the feed-stream SO_2 concentration increases. Problems arise at higher SO_2 concentrations because the amount of sulfite and sulfate formed per scrubbing cycle, the "make-per-pass," becomes higher because L/G is almost never increased in proportion to the inlet SO_2 concentration.[18] Thus, a single-stage scrubbing system would soon be loaded with sulfite and attendant scaling.[5] At a feed-stream composition of 1.5 percent SO_2, achieving the required SO_2 removal is difficult without exceeding the allowable make-per-pass, which would result in higher than desired levels of supersaturation that would in turn cause scaling problems. An extremely high L/G would be required to keep the make-per-pass within acceptable limits; however, at such a high L/G, flooding or excessive entrainment would occur.[18] Therefore, multistaged scrubbing for reverberatory furnace effluent desulfurization is indicated, with each stage having its own reaction tank.[5 18] This was confirmed by the SCRA studies cited previously. At Onahama, two absorbers are employed, each removing about 50 percent of the SO_2 contained in the feed stream.[6] Several general conclusions were developed from the SCRA pilot studies conducted at the Kennecott-McGill smelter. Analysis of the data obtained led to the following conclusions, assuming that 90 percent SO_2 removal from a reverberatory gas stream containing 1 percent SO_2 was desired:[5]

- A venturi followed by several stages of absorption would be required.
- A high L/G would have to be maintained.

- A high-quality limestone ground to a moderate fineness would be required.
- The feed-stream SO_2 concentration would have to be stabilized as much as possible.

In contrast to utility boiler operations that produce offgas streams of a relatively steady SO_2 concentration, a reverberatory furnace can produce offgas streams of varying SO_2 concentrations. Immediately after charging, SO_2 concentrations may be greater than the daily average.[8] Such SO_2 concentration surges in reverberatory furnace offgases can potentially cause serious problems if an adequate process control system is not specified in the system design (see Section 4.3.6). This is especially true in the case of calcine-charged reverberatory furnaces because of their greater variability in SO_2 strengths. In the case of green-charged reverberatory furnaces, meticulous furnace control as practiced at the Onahama Smelter is a demonstrated means by which a reasonably steady SO_2 concentration in the offgas stream can be maintained. Fuel combustion and concentrate charging are instrument controlled to produce a gas stream with a steady concentration of SO_2.[6 18] Furnace interiors are monitored by closed-circuit television at all times so that needed adjustments in furnace operations can be made almost instantaneously before adverse conditions can affect the SO_2 concentration. Assays of slag, silica, mixed ore, and matte can be obtained within an hour to further indicate and facilitate adjustments.

Wide variations in feed stream flow rate could also cause problems in system control; however, the gas flow from a reverberatory furnace is fairly uniform.[4 6 18]

Some degree of feed gas pretreatment is necessary to process reverberatory furnace offgases in calcium-based scrubbing systems. Gases to be treated by slurry scrubbing for SO_2 removal would probably be precleaned in an ESP.[5] However, gas pretreatment as part of a calcium-based scrubbing process would be primarily for cooling and humidification at approximately 55° C (130° F) to achieve high SO_2 removal efficiency and to prevent evaporation and scaling in the scrubber(s). If the solid product is to be of the throwaway type,

exhaustive particulate removal is not warranted. Cooling to this extent is considered to be uneconomical in the utility industry because the gas stream must be reheated to improve its buoyancy as it exits the stack. Ordinarily, flue gas at about 150° C (300° F) is fed directly into the scrubber.[18] After undergoing waste heat recovery and dust removal, reverberatory furnace offgases generally have a temperature of about 370° C (700° F). At Onahama, gases are cooled to approximately 45° C (115° F) prior to entering lime/limestone absorbers.[16] Onahama representatives have indicated that this degree of cooling is necessary to maintain a high SO_2 removal efficiency.[18]

Disposal of solid wastes may also present a problem in the application of calcium-based scrubbing technology to weak SO_2 gas streams from reverberatory furnaces. Standard practice for sludge disposal in the utility industry involves mixing ash with the sludge and then landfilling the mix.[18] Dry lime may also be added to the sludge prior to disposal.[21] Mixing the sludge with ash prevents the sludge from maintaining a "swampy" consistency for long periods after disposal. The addition of lime gives the sludge a harder and stronger consistency. Because the dust content of reverberatory furnace offgases may be up to 10 times greater than that of power plant effluents, one might contemplate mixing these dusts with the sludge and then dumping the dust/sludge mixture into abandoned mines or quarry pits.[5 18] However, the metals content of smelter dusts is always high, prompting operators to recycle the dusts to recover metal values.

Several sources have reported that sludges composed mainly of gypsum tend to have better disposal properties than sludges composed primarily of calcium sulfite.[5 6 21] Thus, forced oxidation of the calcium-sulfite slurry may be a means of improving the disposal properties of the slurry. When forced oxidation is used, gypsum is formed via the following reaction:

$$CaSO_3 + \frac{1}{2} O_2 \rightarrow CaSO_4 \ .$$

At the Onahama smelter, oxidation of the slurry is a principal feature of the process because gypsum is desired as a salable product.

The oxidation is carried out in oxidation towers, where the slurry reacts with oxygen to yield gypsum crystals.[6 16]

In conclusion, the higher SO_2 concentration and other differences in reverberatory gas-stream characteristics do not appear to be serious obstacles to the transfer of current utility-related lime/limestone scrubbing technology. The most significant potential problem involves the capability of the system to respond to fluctuations in the gas-stream SO_2 concentration, especially where calcine-charged reverberatory furnaces are involved. For calcine-charged furnaces, it is likely that some "overdesign" would have to be incorporated into the FGD system to ensure that the desired SO_2 removal efficiency is maintained. This would consist of providing an excess of mass transfer area (larger absorbers) in conjunction with excess solvent handling capability. A well-designed process control scheme that minimizes response lags would also be desirable (see Section 4.3.6). In the case of green-charged reverberatory furnaces, careful furnace control in conjunction with the proper scheduling of smelting operations are proven means by which to maintain a relatively steady gas-stream SO_2 concentration. Thus, the potential process-control-related problems can be minimized or perhaps even eliminated.

4.3.2.6.2 Assessment of applicability based upon existing scrubbing systems that process metallurgical effluents. As indicated previously, the lime/limestone scrubbing system currently in operation at the Onahama smelter is reported to be operating with high reliability as well as high SO_2 removal efficiency.[16 18] Therefore, application of this technology for the control of weak SO_2 streams generated by green-charged reverberatory smelting furnaces should be considered technically demonstrated. The SO_2 concentration in the effluent from the green-charged reverberatory furnaces at Onahama varies from 2.5 to 2.8 percent, demonstrating the ability to stabilize the SO_2 concentration.[6] Lowering the SO_2 concentration by diluting the feed stream would actually improve the SO_2 removal efficiency, but gas-handling equipment would have to be enlarged.[6] The expected SO_2 removal efficiency on domestic green-charged reverberatory furnaces would

naturally be the demonstrated efficiency obtained at Onahama, approximately 99.5 percent.[16] Also, because the SO_2 removal efficiency of these systems increases as the gas stream SO_2 concentration decreases, effective ($\geq$90 percent) removal of SO_2 from offgases generated by calcine-charged reverberatory furnaces should be possible. However, to handle the fluctuations in gas-stream SO_2 concentration inherent in calcine-charged furnace operation, the scrubbing system will have to include a well-designed process control system capable of reacting to sudden changes in the gas-stream SO_2 concentration. Considering the range of SO_2 concentrations encountered in calcine-charged operations (0.4 to 2.0 percent SO_2), providing the adequate process control should be feasible.

The work at Duval indicates that the efficiency of a calcium-based scrubbing system operating with turbulent contact absorbers can be 92 to 96 percent with very little downtime.[6] The system now in place at Duval has also demonstrated another important point. The operation of this system in an area where water is scarce has shown that the proper use of water recycle techniques does allow operation with high reliability in such areas. This is an important consideration because the bulk of the domestic smelters are located in the desert-southwest area of the United States.

4.3.3 Ammonia-Based Scrubbing Systems

4.3.3.1 Summary. Ammonia-based scrubbing systems of the Cominco type (designed by the Consolidated Mining and Smelting Company of Canada, Ltd.) have been demonstrated for the control of SO_2 emissions from Dwight-Lloyd sintering machines, zinc roasters, and sulfuric acid plant tail gases since the 1930's.[4] The successful operation of these units has demonstrated their ability to maintain high SO_2 removal efficiencies while operating on metallurgical feed streams that exhibit wide variations in both volumetric flow rate and SO_2 concentration. SO_2 removal efficiencies in excess of 90 percent have been achieved and sustained in these applications at Cominco's facility in Trail, British Columbia. Cominco-type units can easily maintain high SO_2 removal efficiencies over the range of SO_2 concentrations encountered

in reverberatory smelting furnace effluents.[6] Thus, the Cominco-type process is a technically viable option for the control of SO_2 emissions from properly cleaned reverberatory furnace offgases.

Ammonia-based scrubbing systems of Cominco design, which use sulfuric acid in the acidulation step, produce a strong SO_2 stream and ammonium sulfate. If the ammonium sulfate produced is not marketable, operation of these systems may not be economically justified. In anticipation of this problem, investigations into an ammonia-based scrubbing system that uses ammonium bisulfate for acidulation rather than sulfuric acid have begun.[22] This type of system produces ammonia and ammonium bisulfate via thermal decomposition of the ammonium sulfite produced. The ammonia and ammonium bisulfate are then recycled back to the absorbent makeup and acidulation steps, respectively.

The ammonium-bisulfate acidulation scheme has not achieved large-scale application; however, a pilot study jointly sponsored by EPA and the Tennessee Valley authority (TVA) and conducted at TVA's Colbert Power Plant has provided some data on the operation of this type of system. Extensive tests have been run on a 3,000-cfm unit to establish important operating parameters and to develop solutions for process difficulties. The pilot plant generally operated with SO_2 removal efficiencies of 90 percent or higher, with a feed stream concentration of 0.2 to 0.3 percent SO_2, and an exit-gas concentration of 200 to 300 ppm SO_2.[5] Despite the extensive work accomplished to date, the ammonium bisulfate acidulation scheme cannot be considered fully developed for commercial application; however, this process is forecasted to be the SO_2 removal system of the future[22] because it provides ammonium bisulfate and ammonia for recycle while simultaneously eliminating the need to market ammonium sulfate.

4.3.3.2 General Discussion. Ammonia-based scrubbing systems have received considerable attention in the history of SO_2 removal from process offgases. The reasons for this include the relatively high affinity of ammonia solutions for SO_2 and the ability to keep all the compounds involved in solution, thereby avoiding scaling and silting problems in scrubbers.[4]

SO_2 removal from gas streams by ammonia-based scrubbing has been studied intermittently by various groups since the 1880's.[5] The earliest reference found was a British patent issued to Ramsey in 1883.[5 6 22 23] The earliest studies were aimed at obtaining a regenerative system in which the ammonium bisulfite solution from the absorber could be regenerated by heat in a stripping column.[22] However, during the course of the regeneration cycle, the ammonium salts produced would release ammonia that would subsequently contaminate the recovered SO_2. Consequently, the SO_2 produced was unfit for sulfur, liquid SO_2, or sulfuric acid production without further treatment. In addition, these earlier systems consumed a great deal of process steam while controlling SO_2 emission concentrations only to the 1,000- to 1,500-ppm range.[22] Oxidation of ammonium sulfite/bisulfite salts by oxygen in the gas stream was another problem that hampered the early systems. Oxidation reactions of this type were catalyzed by numerous contaminants, mostly metallic oxides,[5] transferred to the solution by the gas stream. Additional investigation of the equilibria and chemistry involved in ammonia-based processes was necessary to alleviate many of the shortcomings associated with the earlier systems.

Commercial and experimental modifications have evolved over the years, with the greatest developmental emphasis being placed on methods of regenerating the scrubbing liquor to reduce operating costs while producing a variety of useful products. Among the most widely studied methods of scrubber liquor regeneration are:[5]

- Thermal stripping to yield primarily SO_2
- Oxidation to yield primarily ammonium sulfate
- Disproportionation to yield ammonium sulfate and elemental sulfur
- Acidulation to yield SO_2 and an ammonium salt.

Acidulation of the scrubber effluent has proven to be the most popular route, having treated metallurgical gases as well as sulfuric acid plant tail gases for over 50 years.[22] Two basic variants of this scheme exist; however, the basic unit operations involved are identical. The principal process steps of the acidulation scheme are:

- Gas cleaning
- SO_2 absorption
- Acidulation of the absorber effluent
- Stripping.

The most popular scenario involves absorber effluent acidulation with sulfuric acid.[4 5 22] A simplified flow diagram of this process, more commonly known as the Cominco process, is presented in Figure 4-5. The gas stream is first conditioned in the gas cleaning section of the facility. Generally, the gases are cooled, fine solids are washed out, and any SO_3 that may be present is absorbed in water, forming weak sulfuric acid.[4] The cool, clean gases then pass to the bottom of an absorption tower where they are contacted countercurrently with an ammoniacal solution. To improve SO_2 removal efficiency, absorption is commonly performed as a staged operation. The effluent from the absorption step consists of ammonium sulfite, ammonium bisulfite, and ammonium sulfate, with ammonium bisulfite being the primary constituent. All of these components are kept in solution, thus eliminating scaling problems such as those associated with calcium-based systems. Off-gases from the absorption step are vented to the atmosphere.

The acidulation step consists of pumping the absorber product liquor to a continuous stirred tank reactor, where it is reacted with sulfuric acid. The ammonium sulfite/bisulfite/sulfate liquor from the absorbers reacts with the sulfuric acid to yield ammonium sulfate, SO_2, and water. The reactions involved in this step are rapid at ambient temperature and pressure.[22]

An SO_2 stripper completes the basic system. Liquor from the acidulation step is fed to a packed column, where the SO_2 is stripped from solution by contact with air or steam. The recovered SO_2 can be used for the production of sulfuric acid, liquid SO_2, or elemental sulfur. The liquid ammonium sulfate can be sold as is, fed to an ammonium phosphate fertilizer plant, or crystallized to a dry crystalline material and marketed.[22] If crystallization of the ammonium sulfate is desired, the system may include a single-effect or multi-effect evaporator-crystallizer, a crystal centrifuge, a dryer, screens, conveyors, and a solid storage facility.

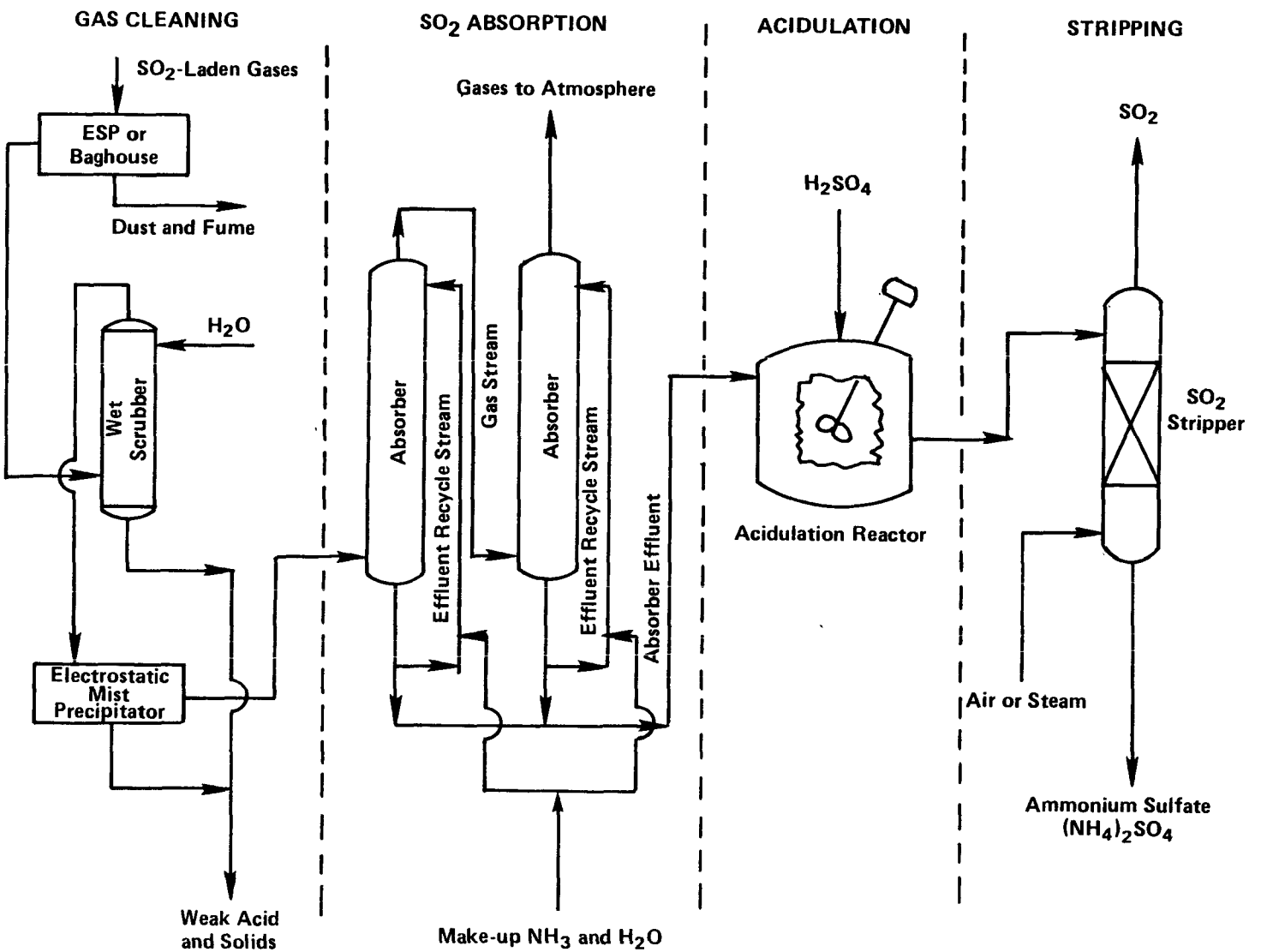

Figure 4-5. Ammonia scrubbing process with sulfuric acid acidulation.

Another variation of ammonia scrubbing that uses acidulation with ammonium bisulfate rather than sulfuric acid might be used in areas where ammonium sulfate is not marketable.[5 22] This type of system would use ammonium bisulfate to acidulate the absorber product liquor, thus producing SO_2 and ammonium sulfate. A simplified flow diagram of this process is presented in Figure 4-6. As indicated, the ammonium sulfate produced in the acidulation step would be decomposed at approximately 385° C (725° F) in an electrically heated or fuel-fired furnace via the following reaction:

$$(NH_4)_2SO_4 \rightarrow NH_4HSO_4 + NH_3 \ .$$

The resulting ammonium bisulfate and ammonia are then recycled back to the acidulation and absorbent makeup steps, respectively. Laboratory tests have shown that ammonium bisulfate behaves very similarly to sulfuric acid in the acidulation step and should give comparable results.[5]

4.3.3.3 Design and Operating Considerations. Proper design and operation of the gas cleaning system is necessary to ensure the reliable operation of ammonia-based scrubbing systems. The primary purposes of the gas cleaning step in ammonia-based processes are:

- To cool and humidify the feed stream to prevent excessive evaporation of the absorbent
- To remove residual particulate matter that may catalyze the oxidation of ammonium sulfite to ammonium sulfate in the absorbers.

Waste gases from any process must be cooled to a reasonable temperature prior to being fed to an absorption tower to avoid excessive evaporation of the scrubbing solution. With regards to ammonia-based scrubbing, the optimum feed stream temperature is established as a tradeoff between mass transfer considerations and the costs of precooling.[5] Since the absorption of SO_2 is exothermic, interstage cooling could also be required to maintain an acceptable temperature in the absorbers ($\leq$55° C[$\leq$130° F]).[5] However, if the feed stream is sufficiently weak (<1 percent SO_2), precooling in a wet scrubber along

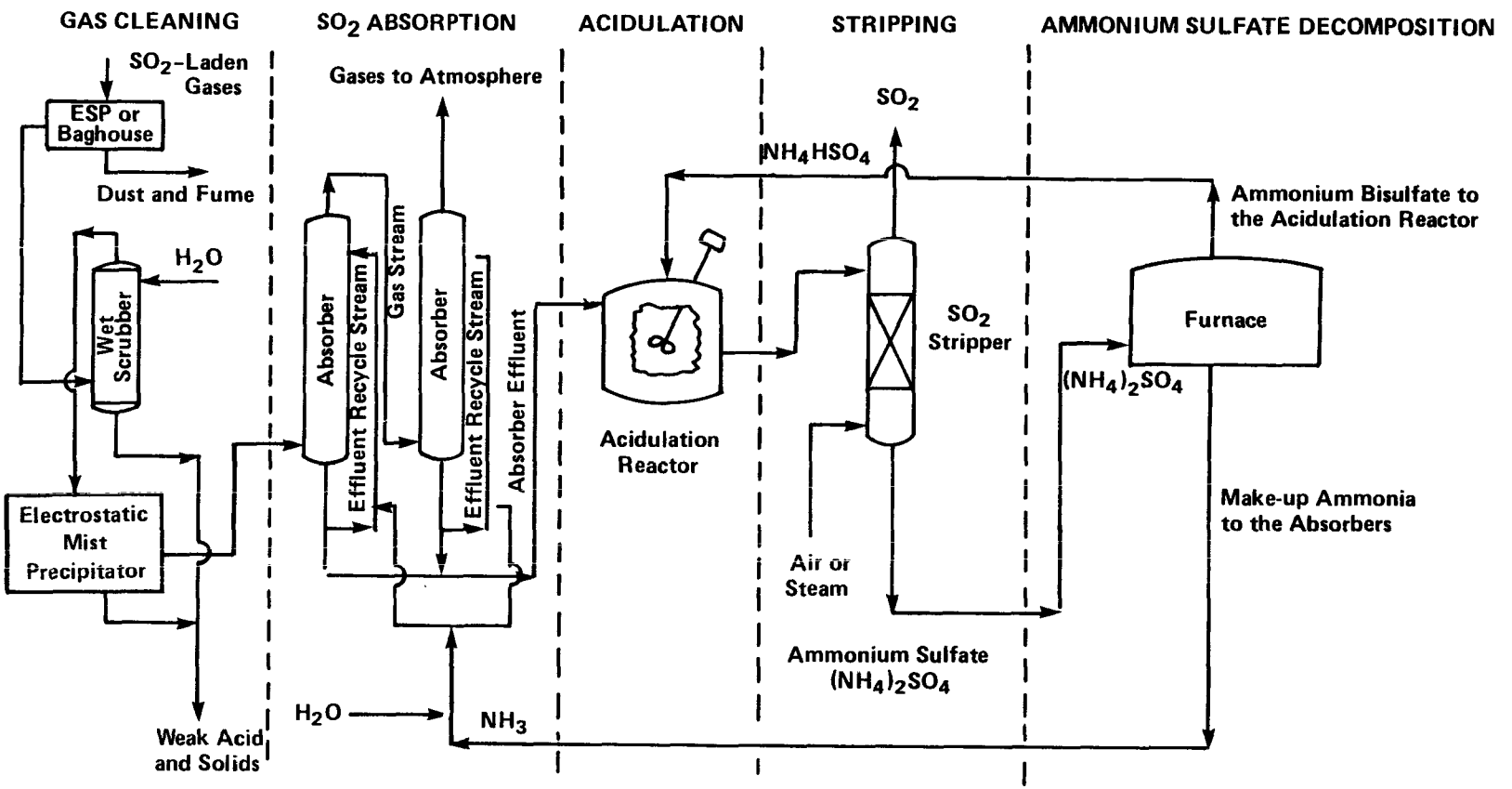

Figure 4-6. Ammonia scrubbing process with ammonium bisulfite acidulation.

with the humidification cooling that occurs naturally in the absorbers should eliminate the need for interstage cooling.[5] Operating experience at Cominco's acid plant tail gas cleanup system has shown that humidification cooling of the 40° C (104° F) dry inlet gas stream resulted in 25° C (75° F) absorption tower operation without prestage or interstage cooling.[5] At a TVA/EPA-sponsored pilot study on coal-fired boiler gases at TVA's Colbert Power Plant, liquor temperatures of up to 55° C (130° F) have been used in the absorber (after precooling) while an acceptable SO_2 absorption efficiency was maintained.[5] In both of these cases, feedstocks were well below 1 percent SO_2. The TVA/EPA pilot plant uses the ammonium bisulfate acidulation scheme to process a feed stream that varies from 0.2 to 0.3 percent SO_2.

In applications to primary copper smelter effluents, gas precleaning would also be necessary to minimize SO_3 and particulate concentrations in the absorber(s). SO_3 and certain metallic oxides present in smelter effluents would tend to promote the oxidation of ammonium sulfite to ammonium sulfate in the absorber proper.[5] Particulates tend to serve as nuclei upon which ammonium sulfate will form.[6]

The most significant operating parameters in the absorption step have been shown to be:[5 6]

- Scrubbing solution temperature
- Total concentration of SO_2 and NH_3 in solution
- Concentration of individual ammonium salts (sulfite, bisulfite, and sulfate), which also determines pH
- Ratio of liquid to gas flow
- Type of internal absorber construction.

The important absorber operating parameters are necessarily related to the vapor-liquid equilibria of the system and the associated approach to equilibrium conditions. Studies have shown that the reactions involved in the absorption of SO_2 by ammoniacal solutions are quite rapid and do not affect the overall absorption rate.[23] Thus, mass transfer is the rate-determining process in the absorption step.

The SO_2 gas-to-liquid mass transfer rate has been shown to be a strong function of the system temperature.[5 23] The transfer rate will decrease as the system temperature increases. The SO_2 transfer rate at 23° C (73° F) is approximately 4.4 times greater than the rate at 52.5° C (126.5° F).[23] Thus, decreasing the solution temperature enhances the equilibrium absorption of SO_2.

Minimizing the total SO_2 concentration in solution will enhance SO_2 absorption efficiency, as will minimize the molar ratio of SO_2 in solution as ammonium bisulfite to SO_2 in solution as ammonium sulfite (S/C). This is because of the effects that these parameters have on the SO_2 vapor pressure and the solution pH, both of which effect the equilibrium absorption of SO_2. The system pH can be well correlated over the range of operation (4.8 to 6.6) as a function of bisulfite-sulfite ratio only.[5]

While decreasing the solution temperature enhances the equilibrium absorption of SO_2, it also serves to minimize ammonia losses from the system.[5 6] Minimizing the total NH_3 concentration in solution also serves to minimize ammonia losses. However, while minimizing S/C tends to favor SO_2 absorption, it also tends to increase ammonia losses from the system. Thus, the choice of an optimum S/C is a tradeoff between the equilibrium SO_2 absorption and the rate of ammonia loss.

The solution pH must also be determined as a tradeoff between SO_2 absorption and the rate of ammonia loss. Experience at the TVA/EPA pilot plant has indicated that a solution pH below 5.6 allows essentially no SO_2 absorption while a pH above 6.8 results in unacceptable rates of NH_3 loss.[5]

Two primary factors that affect the approach to equilibrium in the absorption column(s) are the internal absorber construction and L/G. Absorption of SO_2 in ammoniacal solutions has been accomplished in both packed- and tray-type columns.[5] In the older units treating Cominco's zinc roaster and acid plant waste gases at Trail, British Columbia, wood-slat packing was used in one or more stages with L/G's ranging from 2.1 to 4.3 $\ell/m^3/min$ (16 to 32 gal/1,000 cfm).[4 5] The

acid plant tail gas cleanup system at Olin-Mathieson's facility in Pasadena, Texas, also employed this type of absorber.[9] The more recent TVA/EPA pilot plant work involved the use of multistage marble bed and valve tray arrangements.[5] SO_2 removal efficiencies in excess of 90 percent have been achieved on a steady basis at each of these installations.[5]

Although the L/G required to achieve a specified SO_2 absorption efficiency will vary depending upon the type of absorption column used, high L/G's are generally required to achieve acceptable SO_2 removal efficiencies. The benefits from the higher mass transfer rates associated with high L/G's more than offset the cost of the higher pressure drop.[23]

4.3.3.4 Operational Problems. No detailed information is available on ammonia-based scrubbing system operation without prior removal of particulate matter; however, the potential for problems is evident. Excessive precipitation of solids in the absorber(s) could be a problem if no gas-stream pretreatment were provided.[5] Studies performed in the U.S.S.R. have been the basis for claims that these solids can be easily removed by filtration; however, domestic study does not verify these claims. A yellow solid, identified as a homogeneous iron-ammonia-sulfur compound, was formed in the absorber liquor at the TVA/EPA pilot plant, even though 90 percent or higher particulate removal was accomplished prior to gas stream entry into the absorber. In contrast to the Soviet claims, attempts to remove the solids by filtration were unsuccessful because the precipitated solids and flyash formed a gelatinous, thixotropic material that blinded the filter media.[5] However, in an application to smelter offgases, precipitated solids may not behave in this manner.

As mentioned previously, the presence of particulate matter in the feed stream may also cause undesirable reactions to occur in the absorber(s), most notably sulfite oxidation. Particulates tend to catalyze the oxidation of ammonium sulfite, resulting in ammonium sulfate formation in the absorber(s). If smelter process offgases were not cleaned prior to entry into the absorber(s), Cominco maintains that problems could arise from fouling of cooler lines and other

process equipment.[4] Cominco precleans and conditions the offgases from its Dwight-Lloyd sintering machines prior to SO_2 absorption.

It is generally accepted that the presence of particulate matter in the absorbers has no effect on absorption rates;[4] however, particulate matter would have to be removed from the solution prior to acidulation because it would interfere with the springing of SO_2 from solution.

Ammonia loss from ammonia-based scrubbing systems can be a problem if the process is not controlled quite carefully. Decreasing the absorbent temperature tends to reduce NH_3 losses and enhance SO_2 absorption.[5 6] Absorbent pH is also an important factor. At low pH, there is no SO_2 absorption, while high pH results in an unacceptable level of ammonia loss.[6] Thus, the absorbent pH must be maintained within a narrow range to result in good SO_2 absorption and reasonably low NH_3 loss. This is achieved at Cominco by adding aqua ammonia to each absorption tower and controlling the absorbent temperature as it is fed to the towers.[6]

Scaling, erosion, and corrosion are generally not problems in ammonia-based scrubbing systems.[4] Scaling and erosion do not occur because the absorbent is a solution rather than a slurry, and all components tend to remain in solution. Corrosion does not cause problems if the proper construction materials are used.

A serious problem encountered with most of the ammonia-based scrubbing systems is the formation of an opaque fume in the exit gas stream.[4 5 6] The fume is partially attributed to gas-phase reactions of ammonia, SO_2, and water-forming ammonium sulfite,[5 6] which, due to its small size, is not efficiently removed by conventional mist eliminators.[6] The fume is objectionable as an opacity problem. Wet ESP's have been used at some installations to eliminate this problem. Absorbent temperature and pH have been cited as having the most significant effect on plume formation.[4] Cominco reported adequate control of the fume when operating with a liquor temperature of 25° C (77° F) and a clean inlet gas stream.[5] Olin Mathieson operated with a pH control system that reportedly eliminated the plume opacity problem, but the exact pH limitations were not reported.[5] In the U.S.S.R., wet ESP's are reportedly used at the top of ammonia absorbers to control the fume.[5]

At the TVA/EPA pilot plant, plume opacity was controlled to 5 percent or less when operating with an absorbent temperature of approximately 50° C (120° F) by using a prewash to remove particulates and SO_3, maintaining a low salt concentration on the top stage of the absorber, and reheating the exit gas stream 6° to 11° C (10° to 20° F) above the temperature required to dissipate the steam plume.[5] However, a visible plume would often reform outside the absorber on humid days.

4.3.3.5 Survey of Operating Experience. Scrubbing SO_2 from waste gases with ammoniacal solutions has been practiced commercially by Cominco in Trail, British Columbia, by Olin Mathieson in Pasadena, Texas, and in Romania, Japan, France, Czechoslovakia, Germany, and the U.S.S.R.[5] The systems of Cominco-type design in place at Trail and Pasadena use the sulfuric acid acidulation process. Details of foreign systems are lacking, but it is unlikely that any of the foreign installations use the ammonium bisulfate acidulation process. No known ammonia-based scrubbing processes employ ammonia bisulfate acidulation on a large scale; however, the TVA/EPA pilot-plant study has provided data on the ammonia bisulfate acidulation scheme.

The Cominco-type systems in place at Trail, British Columbia, have been quite successful. These units have processed offgases from a lead sintering plant, a zinc roaster, and a sulfuric acid plant.[5 6] Performance data on these units are summarized in Table 4-6. As indicated, these systems have achieved SO_2 removal efficiencies ranging from 91 to 98 percent. The main problem with the Cominco-type systems has proven to be ammonia loss.[6] Presently, Cominco converts part of the SO_2 into sulfuric acid while the remainder is converted into ammonium sulfate.

While the ammonium bisulfate acidulation process has not achieved commercial operational status, it merits consideration based upon the fact that the need for an ammonium sulfate market is eliminated. In addition, ammonia and ammonium bisulfate are regenerated for recycle to the absorbent preparation and acidulation steps, respectively.

The TVA/EPA pilot plant has proven to be quite successful in removing SO_2 from boiler offgases. This system has exhibited SO_2

TABLE 4-6. PERFORMANCE DATA ON THE COMINCO-TYPE AMMONIA-BASED SCRUBBING UNITS AT TRAIL, BRITISH COLUMBIA

Feed-stream source	Feed-stream volumetric flow rate, scfm[a]	Percent SO_2 in feed stream[a]	Percent SO_2 in cleaned gas stream[b]	SO_2 removal efficiency, percent[c]
Lead sintering plant	150,000 to 200,000	0.3 to 2.5	~0.10	~96
Zinc roaster	0 to 45,000	0.5 to 7.0	~0.10	~98
Sulfuric acid plant	50 to 95,000	0.9 to 1.0	~0.09	~91

[a]Data taken from Reference 4.

[b]Data taken from Reference 5.

[c]Estimated based upon the maximum feed-stream SO_2 concentration.

removal efficiencies in excess of 90 percent, with a feed-stream concentration of 0.2 to 0.3 percent SO_2 and an exit-gas SO_2 concentration of 200 to 300 ppm.[5] This experience indicates that desulfurization efficiencies of 90 to 95 percent are technically achievable. As with Cominco-type systems, however, careful process control is required to prevent excessive ammonia loss and the formation of an opaque plume.

4.3.3.6 Applicability to Reverberatory Smelting Furnaces. The Cominco-type process can achieve high SO_2 removal efficiencies over a wide range of SO_2 concentrations. The range of SO_2 concentrations over which these systems will operate efficiently easily encompasses the range of SO_2 concentrations encountered in offgases from reverberatory smelting furnaces.[6] In addition, applications of this process to metallurgical effluents at Trail, British Columbia, have demonstrated the system's capability to handle wide variations in feed-stream volumetric flow rate and SO_2 concentration. However, ammonia loss from these systems can be a problem. Ammonia volatility may limit minimum the SO_2 emission concentration to the 200- to 300-ppm range for practical applications.[6]

An additional factor that must be considered in assessing the applicability of the Cominco-type process for control of reverberatory furnace effluents is the possible need for interstage cooling as discussed in Section 4.3.3.3. There would be no technical problems in providing interstage cooling; however, this cooling must be evaluated as an additional cost consideration.

In conclusion, with adequate process control provisions, the Cominco-type system is a technically viable control option for the control of reverberatory furnace effluents. Precise control of the absorbent temperature and pH would be required to minimize ammonia loss and eliminate the visible emissions problem; however, neither of these problems appears to be chronic. Pretreatment of the feed stream for the purposes of cooling, humidification, and particulate removal would also be required, but this would present no technical problems because adequate gas conditioning technology already exists.

The feasibility of applying the ammonium bisulfate acidulation scheme for reverberatory furnace effluent control cannot be assessed accurately because no data exist concerning its application to metallurgical offgases. However, because these systems are identical to the Cominco-type systems except for the acidulation method and the sulfate decomposition requirement, no evidence exists to suggest they would not be technically feasible control options. This process is forecasted to be the SO_2 removal system of the future[22] because it provides ammonium bisulfate and ammonia for recycle while simultaneously eliminating the need to market ammonium sulfate.

4.3.4 Magnesium-Based Scrubbing Systems

4.3.4.1 Summary. Magnesium-based scrubbing systems have been the object of a great deal of developmental work during the last decade, especially in Japan, the U.S.S.R., and the United States. Most of this developmental work has concentrated on the MAGOX process, which uses magnesium sulfite/magnesium oxide slurries to effect SO_2 removal from gas streams. Systems of this type are especially attractive because the absorbent can be regenerated.

Commercial demonstration runs on both coal- and oil-fired utility boilers in the United States have demonstrated the ability of the MAGOX process to achieve SO_2 removal efficiencies in excess of 90 percent when operating on utility-related weak SO_2 streams.[5] Experience obtained from the earliest utility-related applications has also been instrumental in the improvement and optimization of many of the design features of the MAGOX slurry scrubbing process. In addition, the MAGOX scrubbing system currently in place at the Onahama smelter in Japan is said to be a direct transfer of Japanese utility-related scrubbing technology, which suggests that differences in the characteristics of boiler and reverberatory furnace effluents do not constitute serious obstacles to the transfer of utility-related technology.

Perhaps the most significant application of magnesium-based technology to occur over the past few years has been the system installed at the Onahama smelter in 1972. This system produces a concentrated SO_2 stream from a portion of a weak SO_2 stream generated by three green-charged reverberatory furnaces and shows a substantial ability

to absorb fluctuations in the feed-stream SO_2 concentration.[6] SO_2 removal efficiencies are typically in excess of 99 percent. Based upon the successful operation of the Onahama system, a similar system could provide SO_2 removal efficiencies of well over 90 percent in applications to reverberatory furnace offgases of domestic origin,[6] providing an adequate water supply is available to meet the process water requirement. A system of this type would also provide product flexibility because the concentrated SO_2 stream produced can be used to manufacture liquid SO_2 and elemental sulfur as well as sulfuric acid.

4.3.4.2 General Discussion. A number of magnesium-based scrubbing systems provide effective SO_2 removal; however, U.S. developmental work, as well as related Japanese and Russian work, has concentrated on the use of magnesium sulfite/magnesium oxide slurries to effect SO_2 removal.[5]

A simplified flow diagram for the MAGOX process is presented in Figure 4-7. This process involves operations associated with the following primary areas:

- Gas cleaning and conditioning
- SO_2 absorption
- Slurry handling
- Solids drying and calcining.

Gas cleaning occurs when the feed stream is passed through a wet scrubber, usually of the venturi type, where it is cooled and residual particulate matter is removed. Undesirable halogens that may be present are also removed in the wet scrubber. A bleed stream from the wet scrubber is thickened to concentrate the particulate matter as a slurry underflow, which is transported to a disposal area.

SO_2 absorption occurs when the cleaned gas stream is vented to a scrubber, where it is contacted with the absorbent slurry. The absorption reaction takes place between SO_2 and magnesium oxide (MgO) and results in the formation of magnesium sulfite ($MgSO_3$). Some of the SO_2 may also react with $MgSO_3$ in the presence of water to form magnesium

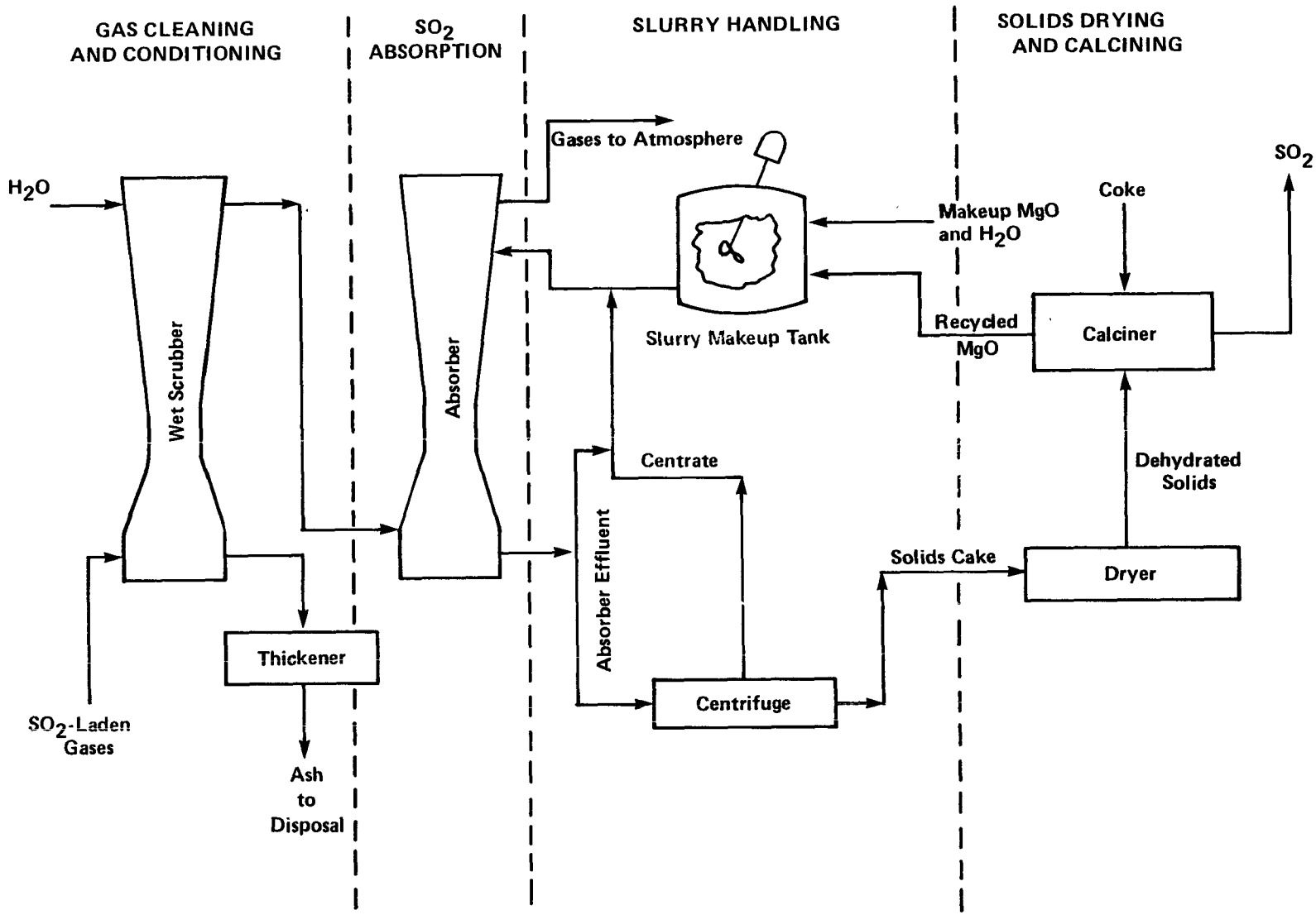

Figure 4-7. Magnesium-oxide (MAGOX) scrubbing process.

bisulfite, $Mg(HSO_3)_2$, which immediately reacts with excess MgO to yield additional $MgSO_3$. A small amount of $MgSO_4$ may be formed by in situ oxidation of a small portion of $MgSO_3$ and/or by SO_3 absorption into the slurry. The resulting aqueous slurry that exits the absorber contains hydrated crystals of $MgSO_3$ and $MgSO_4$--e.g., $MgSO_3 \cdot 3H_2O$, $MgSO_3 \cdot 6H_2O$, and $MgSO_4 \cdot 7H_2O$; some excess MgO; and a solution saturated with each of these components.

Slurry-handling operations involve splitting the slurry after it exits the absorber, routing a portion to a centrifuge for partial dewatering, and recycling the remainder to the absorber. At the centrifuge, a moist cake consisting of crystals of $MgSO_3 \cdot 3H_2O$, $MgSO_3 \cdot 6H_2O$, $MgSO_4 \cdot 7H_2O$ and unreacted MgO is obtained. The clear liquor centrate is then returned to the main recirculating slurry stream together with makeup MgO slurry from the slurry makeup tank, and the resulting stream is recycled to the absorber for further SO_2 recovery. The crystal cake is then conveyed to a dryer, where free and bound moisture is removed by using a direct contact drying gas under nonoxidizing conditions. The resulting anhydrous salts are then calcined to MgO, which is reused in the absorption system after having been slaked and slurried in the slurry makeup tank. Coke is added to the calciner to convert any $MgSO_4$ present to MgO.

4.3.4.3 Design and Operating Considerations. The MAGOX process, in common with most aqueous scrubbing systems, requires the feed stream to be at least saturated with water vapor to minimize absorbent evaporation and localized high salt concentrations in the absorber(s). With initial gas-stream temperatures of between 150° and 315° C (300° and 600° F), water quenching in a wet scrubber should provide acceptable cooling and humidification.[5] A venturi-type scrubber is usually employed for this purpose. Also, because the MAGOX system uses the closed system mode of operation, the introduction into the absorber of particulate matter--most notably oxidation catalyzing metals and sulfuric acid mist--must be minimized. An ESP in series with the wet scrubber should provide adequate cooling, humidification, and particulate matter removal in applications where copper smelter effluents are to be processed.[5]

The most significant operating parameters in the absorption step have been shown to be:

- Ratio of liquid to gas flow
- pH of the absorbent slurry.

The SO_2 removal efficiency of the MAGOX system will increase as L/G is increased;[5] however, the L/G required to achieve a particular SO_2 removal efficiency will vary depending upon the type of absorber used.

Due to its effect on the SO_2 vapor pressure over the scrubbing solution, the pH of the absorbent slurry has a distinct effect on the SO_2 removal efficiency. Increasing the pH of the absorbent slurry will tend to increase SO_2 removal efficiency[5] because a high-slurry pH will keep the vapor pressure of SO_2 above the solution small in comparison to the SO_2 partial pressure in the gas stream and thus promote mass transfer.

Temperature exercises little adverse effect on the mass transfer rates if the slurry pH is maintained at 6 or above due to the very low SO_2 vapor pressures in evidence at this pH level.

Both venturi and mobile bed absorbers have been evaluated for use in MAGOX systems, and both types have proven capable of attaining SO_2 absorption efficiencies in excess of 90 percent.[5] However, venturi absorbers require a higher operating L/G to achieve a given SO_2 removal efficiency. In spite of this factor, the venturi absorber appears to provide several operating advantages and has thus been selected for use in domestic commercial installations. The Japanese have used TCA's almost exclusively in their MAGOX systems; however, they do not feel that TCA's provide any significant operational advantages and have shown an interest in using venturi absorbers for future applications.[6]

The SO_2 concentration in the gas phase would not be expected to adversely affect the SO_2 absorption rate until the concentration rises above about 3.5 percent.[5] Therefore, this would not be expected to present any problems in applications to reverberatory furnace offgases, which generally exhibit a maximum SO_2 concentration of 2.5 percent.[4]

In the drying and calcining sections of a MAGOX scrubbing facility, the use of fluid-bed equipment offers several advantages--namely, lower capital and operating costs, lower heat loss, and better temperature control.[5] Also, in the case of calciner operation, fluid-bed operation would allow for more precise control of oxygen, which in turn could minimize the requirement for coke to reduce the $MgSO_4$. With regard to oxygen, where the gas stream is likely to contain high levels of O_2 such as those in reverberatory furnace offgases, the use of organic inhibitors may be warranted to reduce the sulfite oxidation rate.

4.3.4.4 Operational Problems. A great deal of information on problems that have been encountered with MAGOX systems of Chemico design was compiled during a commercial-scale test program at Boston Edison's Mystic Power Station. This system processed boiler offgases and produced solid $MgSO_3$, which was then sent to Essex Chemical's facility in Rumford, Rhode Island, for calcination. The majority of the problems encountered with this system occurred at startup and did not prove to be chronic.

The majority of the problems encountered during startup centered around the dryer.[24] The initial problem encountered involved an inability to transfer all of the dried product into the $MgSO_3$ storage silo due to excessive entrainment of product fines in the countercurrent drying gas stream. Entrainment of this nature ultimately resulted in overloading and plugging of the dryer cyclones. Efforts to alleviate this problem by reducing the draft through the dryers were only partially successful, and the eventual solution involved modifications to the dryer internals.

During the early stages of startup, the changing consistency of the centrifuge cake led to some difficulty in dryer operation. Upon startup of the absorption systems, the principal nucleation appeared to result in the formation of crystals of $MgSO_3 \cdot 6H_2O$. However, as the system aged and reached an equilibrium temperature of 56° C (132° F), nucleation involving the formation of $MgSO_3 \cdot 3H_2O$ became more predominant. Because the mature trihydrate crystals were considerably smaller

in size than the hexahydrate crystals, they were less efficiently centrifuged and thus resulted in a wetter cake, which tended to agglomerate as it passed through the dryer. The formation of large nodules caused shutdown of the conveying system by jamming and ripping the rubber weigh belt. Larger agglomerates also caused some problems in the pneumatic conveying operations. Ultimately, a pulverizer was installed at the dryer exit to alleviate these problems.

The dryer was also unable to operate satisfactorily on high-sulfur oil. Burner flameouts were frequent because of the formation of coking deposits, which were later attributed to insufficient oil preheating. With insufficient preheating, the oil did not attain the proper viscosity for atomization. This problem was resolved by ensuring that the oil was preheated to at least 125° C (260° F).

The calcining system also experienced some problems at startup, the most significant being the difficulty in attaining a nonoxidizing atmosphere in the calciner. This difficulty was overcome by reducing air infiltration through the seals at the firing end of the calciner.

The venturi absorption system at this facility has operated successfully with no evidence of scaling or silting at any points.[24] Pluggage of small lines did occur occasionally; however, this problem was easily remedied by back flushing.

The MAGOX process as now commercially defined imposes no unusual problems in terms of corrosion or special processing equipment.[5] As is normal in slurry systems, the use of elastomer-lined or specially coated equipment and piping in the scrubbing and recirculation system has provided acceptable service in the domestic commercial installations apart from some localized problems.

To avoid downtime for absorber maintenance, the Japanese included a spare turbulent contact absorber in the Onahama system.[6] Ball wear in the absorbers is controlled by replacement every 2 to 3 months.

In conclusion, no chronic operational problems exist that would hinder the operation and reliability of MAGOX systems that might be employed to control weak SO_2 streams generated by reverberatory smelting furnaces. Although the earlier domestic systems of Chemico design experienced numerous difficulties, all serious problems were eventually alleviated.[24]

While no single outstanding reason exists for the early difficulties encountered, the development and operating experience in Japan was greater than domestic experience at the time the first systems were installed.[6] The Japanese development work on these systems was a direct transfer of utility-related technology and appears to have been considerably more successful than the domestic development work on the same type of system.[25] However, domestic experience gained from the earlier systems such as the Boston Edison system has led to numerous improvements in domestic MAGOX system design.

4.3.4.5 Survey of Operating Experience. The MAGOX slurry scrubbing system has been under commercial-scale evaluation in the United States since 1972.[5] Construction of the first domestic commercial system, the Chemico/Basic MgO sulfur recovery process, was completed in April 1972. The scrubbing and recovery system at Boston Edison's Mystic Station operated on offgases from a 150-MW, oil-fired boiler. The regeneration facilities were located at Essex Chemical's facility in Rumford, Rhode Island, where the SO_2 was used to produce sulfuric acid. As noted in Section 4.3.4.4, several difficulties were encountered with this system; however, none proved to be chronic, and all serious operational difficulties were eventually alleviated via design modifications and/or changes in operating procedure. This unit was a prototype trial installation built primarily to obtain operating data, and its use was eventually terminated in June 1974. The unit demonstrated availabilities in the range of 80 percent during the final month of operation.

Another prototype Chemico/Basic unit was intalled at Potomac Electric and Power Company's Dickerson Station No. 3 in 1973. This scrubbing system processed offgases generated by a 95-MW, coal-fired boiler. Performance testing of this system resulted in an average SO_2 removal efficiency of 88.9 percent.[19] This unit, like the unit at Boston Edison's Mystic Station No. 6, fulfilled its purpose by indicating areas where improvement was needed. Demonstration runs on the Dickerson unit were completed in August 1975.

Experience obtained from the systems at Boston Edison's Mystic Station and at Potomac Electric and Power Company's Dickerson Station

led to several design changes that helped to improve the reliability of the Chemico/Basic system. Chemico subsequently installed a MAGOX scrubbing system at the Chiba refinery in Japan, and this system is apparently working satisfactorily.[6] While this system provides a concentrated SO_2 stream as feed to a Claus plant, it is essentially the same as the earlier Chemico system except for design modifications to eliminate the previously mentioned operational problems and thus improve system reliability.

In December 1972, the Onahama Smelting and Refining Company, Ltd., began the operation of a MAGOX system designed to produce a strong SO_2 stream from green-charged reverberatory furnace offgases. The development and installation of the MAGOX SO_2 concentration system at the Onahama smelter was carried out as a joint effort between the Tsukishima Kikai Company (TSK) and the Mitsubishi Metals Corporation.[6] The TSK-Mitsubishi MAGOX system is essentially the same as the Chemico/Basic system as far as major design considerations are concerned, with the only distinct difference being the type of absorber employed. However, as mentioned in Section 4.3.4.3, the Japanese do not feel that the TCA's they use have any distinct advantages over the venturi-style scrubber employed in the Chemico/Basic design. The MAGOX system was chosen to provide a concentrated SO_2 stream for direct acid-plant processing because of low energy requirements in comparison to other regenerative systems. This system processes approximately 1,600 dry Nm^3/min (55,000 dry scfm) of reverberatory furnace offgas at an SO_2 concentration of approximately 2.5 percent.[26] Although the feed stream to the MAGOX system is maintained at about 2.5 percent,[6 18] the system has shown a considerable capability to handle the fluctuations in the feed-stream SO_2 concentration that do occur.[6] Also, no problems exist with magnesium sulfate buildup because the turnover ratio and makeup material are sufficient. A stream averaging 10 percent SO_2 is produced by the calciner, while the gas stream that exits the absorber generally exhibits an SO_2 concentration of about 20 ppm.[6] The degree of SO_2 removal associated with the resultant 20 ppm absorber offgas stream is in excess of 99 percent. This system is of particular

significance as it demonstrates the ability of a MAGOX system to operate on a weak SO_2 stream generated by reverberatory smelting furnaces.

4.3.4.6 Applicability to Reverberatory Smelting Furnaces.

4.3.4.6.1 Transfer of utility-related scrubbing technology. Commercial demonstration runs on both coal- and oil-fired utility boilers in the United States have demonstrated that the MAGOX slurry scrubbing process is able to achieve SO_2 removal efficiencies of 96 percent or greater on boiler offgases.[5] Considerable experimental work in recent years has also served to establish, with some assurance, the chemistry, kinetics, and mass transfer relationships that govern the MAGOX process, suggesting that appropriate adjustment of L/G and the slurry pH could achieve SO_2 removal efficiencies of 90 percent or greater on weak SO_2 gas streams. In addition, the MAGOX scrubbing system currently in place at the Onahama smelter is a direct transfer of utility-related scrubbing technology, which suggests that differences in the characteristics of boiler and reverberatory furnace offgases are not serious obstacles to the transfer of utility-related technology.

4.3.4.6.2 Assessment of applicability based upon existing scrubbing systems that process metallurgical effluents. As discussed in Section 4.3.4.5, a MAGOX system has been operated satisfactorily on green-charged reverberatory furnace offgases at the Onahama smelter in Japan. Therefore, application of this technology for the control of weak SO_2 streams generated by green-charged reverberatory smelting furnaces should be considered demonstrated. Although the MAGOX system at Onahama has shown a considerable capability for absorbing fluctuations in the feed stream SO_2 concentration, the SO_2 concentration in the effluent from the green-charged reverberatory furnaces is kept constant at about 2.5 percent,[6 27] thus demonstrating the ability to stabilize the SO_2 concentration. The system produces a concentrated stream containing 10 to 13 percent SO_2 that can be processed directly in a dual-stage absorption or single-stage absorption sulfuric acid plant.[6] Based upon the successful operation of the Onahama system, a

similar system could undoubtedly provide SO_2 removal efficiencies of well over 90 percent in applications to green-charged reverberatory furnace offgases of domestic origin,[6] providing an adequate water supply is available to meet the process water requirement. Furthermore, product flexibility is obtained as the concentrated SO_2 stream produced can be used to make liquid SO_2 and elemental sulfur as well as sulfuric acid.

Since the SO_2 removal efficiency of MAGOX systems will increase as the gas-stream SO_2 concentration decreases, applications to offgases generated by calcine-charged reverberatory furnaces should be technically feasible. A properly designed scrubbing system should be able to accommodate the fluctuations in gas-stream SO_2 concentration that occur with either sidewall or Wagstaff-charged furnaces that smelt a calcine charge (see Section 4.3.6).

4.3.5 Citrate Scrubbing Processes

4.3.5.1 Summary. Scrubbing systems that use citrate-type absorbents have been the subject of a great deal of developmental work, particularly in the United States and Sweden. The U.S. Bureau of Mines, Salt Lake City Metallurgy Research Center, has sponsored several studies on the absorption of SO_2 in citrate-type absorbents. As a result of these investigations, three pilot-scale studies that used process technology developed initially by the Bureau of Mines were conducted.

The feedstocks involved in these studies were offgas streams generated by green-charged reverberatory furnaces, coal-fired utility boilers, and a Lurgi updraft lead sintering machine. The results of all three studies were generally inconclusive because various operational problems proved to be chronic in nature, thus preventing long-term reliable operation. However, most of the operational problems occurred in the SO_2 reduction circuit and not the SO_2 absorption circuit. Consequently, the pilot studies demonstrated that the system has the ability to achieve high SO_2 removal efficiencies while processing weak streams. Removal efficiencies in two of the three applications were in excess of 93 percent.[6] Thus, with further development and commercial-scale demonstration, the Bureau of Mines process may prove to be a

viable control option for weak SO_2 streams from reverberatory furnaces.

Investigation into the absorption of SO_2 in citrate-type solutions began in Sweden as an effort to improve the SO_2 absorption properties of pure water. The Boliden AB Ronnskarsverken smelter at Skelleftehamn, Sweden, has been removing SO_2 from smelter offgases by absorption in cold water on a commercial scale since 1970. The economic success of this operation depends upon the year-round supply of cold water (5° to 8° C [41° to 46° F]) near the smelter site. The investigations into SO_2 absorption using citrate-type absorbents were prompted by the fact that ample year-round supplies of cold water were not available in all areas where water scrubbing might be used to effect SO_2 removal. Thus, a means to improve the absorption properties of water at temperatures greater than 8° C (46° F) was desired.

An absorption process that uses a brine of citric acid and sodium citrate was eventually developed as a result of long-range work by the Boliden Company of Sweden, the Norwegian Technical Institute SINTEF, and Svenska Flaktfabrika (Flakt).[6] A pilot-scale version of the Flakt-Boliden process was used at the Ronnskar smelter to establish a design background for the process. Gases from a number of various lead and copper smelting operations were used as feedstocks for the pilot facility. Flakt has reported that the test results look very promising; however, the actual SO_2 removal efficiencies achieved during the tests are not readily available.

The Flakt-Boliden process exhibits a very distinct advantage over the Bureau of Mines process; i.e., it is relatively simple. The process uses steam stripping of the absorber effluent to produce a concentrated SO_2 stream, while the Bureau of Mines process employs a very complex SO_2-reduction scheme to produce elemental sulfur. Consequently, the Flakt-Boliden process is not likely to involve the numerous operational problems that have been encountered thus far with the Bureau of Mines process. Product flexibility is also obtained with the Flakt-Boliden process because the concentrated SO_2 stream produced may be liquefied to produce liquid SO_2, fed to a contact sulfuric acid

plant to produce sulfuric acid, or fed to a Claus plant to produce elemental sulfur.

Like the Bureau of Mines process, the Flakt-Boliden process has only been applied on a pilot scale. Although the range of feed-stream SO_2 concentrations processed by the Flakt-Boliden pilot plant easily encompassed the range of SO_2 concentrations produced by reverberatory smelting furnaces, the system cannot be considered to be a viable control option for reverberatory furnace effluents until it is demonstrated in a commercial-scale application that firmly establishes the achievable range of SO_2 removal efficiencies.

4.3.5.2 General Discussion. The Bureau of Mines citrate scrubbing process was developed as a result of investigations showing that several organic acids--including acetic, citric, and lactic acid--had a great affinity for SO_2. A mixture of citric acid, sodium citrate, and sodium thiosulfate was finally selected for further development because of its chemical stability. This system was designed to produce elemental sulfur by using manufactured hydrogen sulfide (H_2S) as a reducing agent.

A simplified flow diagram of the Bureau of Mines citrate scrubbing process is presented in Figure 4-8. The principal process steps are as follows:

- Gas cleaning and cooling
- SO_2 absorption
- SO_2 reduction and absorbent regeneration
- Sulfate removal
- Sulfur recovery
- H_2S generation.

Gas cleaning and cooling consists of removing particulate matter and acid mist from the gas stream while cooling it to the 45° to 65° C (115° to 150° F) temperature range. The cool, clean gas stream is then vented to an absorber, where SO_2 absorption occurs. In the absorber, the gas stream is contacted countercurrently with a sodium

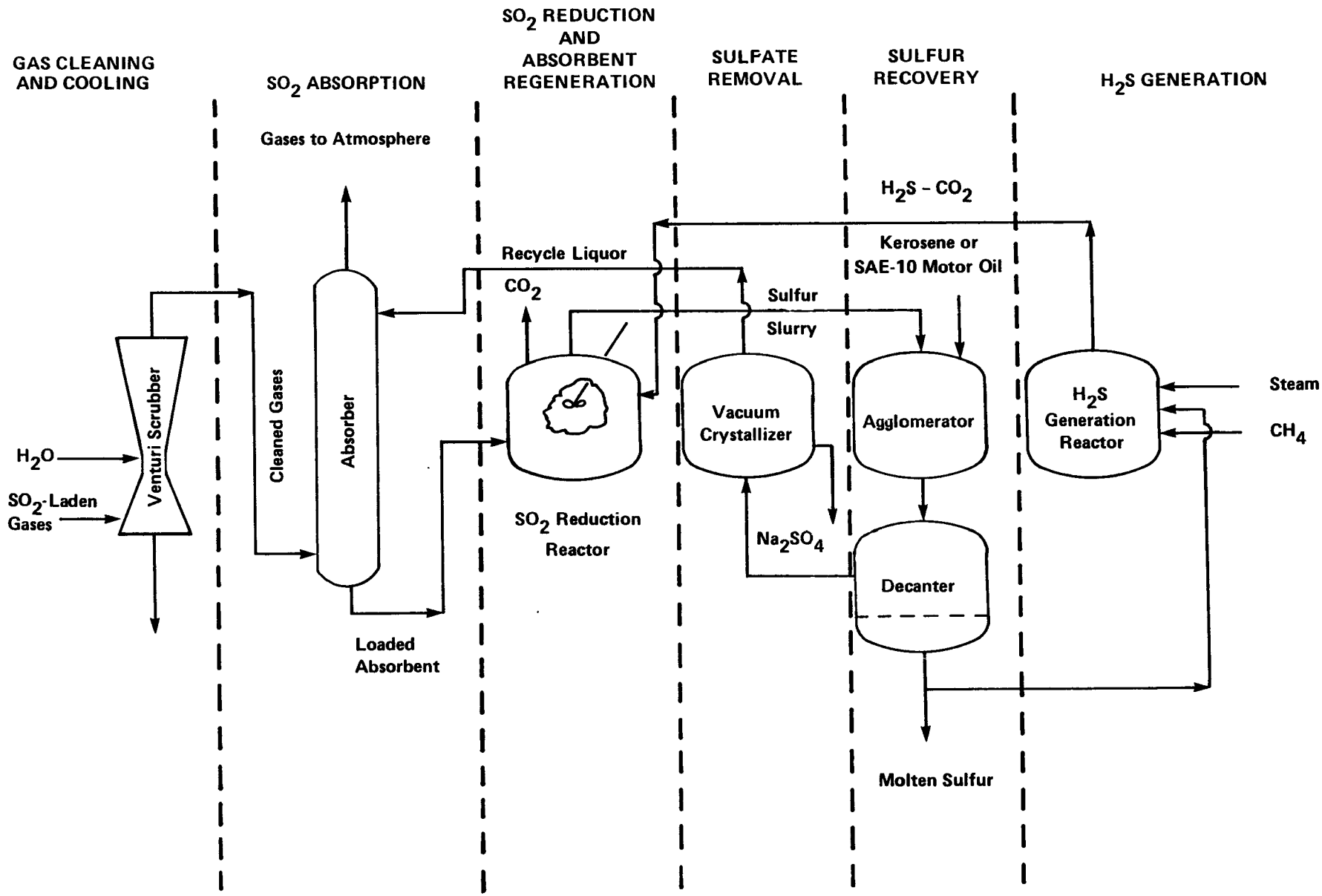

Figure 4-8. Bureau of Mines citrate scrubbing process.

citrate/citric acid solution. Gases exiting the absorber are vented to the atmosphere, while the loaded absorbent is pumped to a continuous stirred tank reactor. In the reactor, the SO_2 is reduced to elemental sulfur, and the citrate solution is regenerated by introducing H_2S as a reducing agent. Sulfur slurry from the SO_2 reduction reactor is fed to the sulfur separation system. In the sulfur separation unit, the sulfur is agglomerated by flotation with either kerosene or SAE-10 motor oil. The floated sulfur, at 35 to 40 percent solids, is fed to a heater to produce molten sulfur. Liquid phases are then separated in a decanter under a pressure of about 2.4 atm (243,200 Pa), resulting in a bottom layer of high-quality molten sulfur and a top layer of citrate solution. The molten sulfur is drawn off, and the citrate solution is sent to a vacuum crystallizer, where sodium sulfate (Na_2SO_4) is removed. Effluent from the vacuum crystallizer is then recycled to the absorber.

The H_2S gas, which serves as the reductant in the SO_2 reduction step, is produced from a portion of the molten sulfur drawn off the decanter. Filtered molten sulfur from the decanter is preheated by indirect heat exchange with the H_2S reactor effluent before being vaporized and subsequently superheated to 650° C (1,200° F). A portion of the resulting sulfur vapor is mixed with a hot natural gas/steam mixture, and the resultant stream is routed to a quench-cooled catalytic H_2S-generation reactor. The remaining sulfur vapor is mixed with an unpreheated natural gas/steam mixture and injected into the catalyst bed to keep the bed temperature approximately constant. The hot reactor effluent, consisting primarily of H_2S and CO_2, is then used to preheat the sulfur feed as mentioned above before being used in the production of the steam required for H_2S generation. The reactor effluent is then cooled to approximately 60° C (140° F) before being fed to the SO_2 reduction reactor. The portion of the molten sulfur not used to produce H_2S is generally cast into bricks.

The Flakt-Boliden system has resulted from long-range developmental work carried out by several copper smelters and technical institutes in Scandinavia.[6] A flow diagram of the Flakt-Boliden

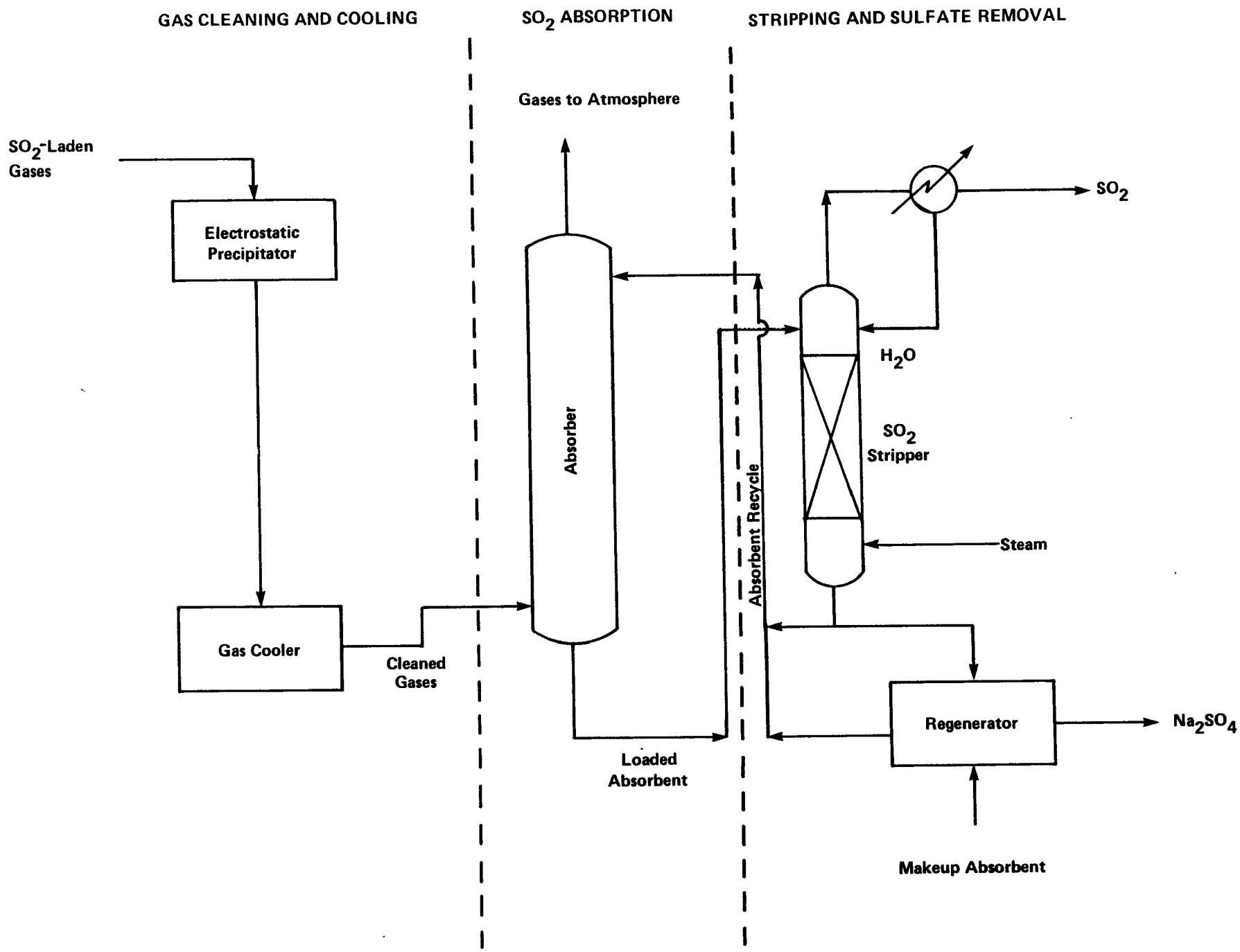

Figure 4-9. Flakt-Boliden citrate scrubbing process.

citrate scrubbing process is presented in Figure 4-9. The basic process steps involved in the Flakt-Boliden process are summarized below:

- Gas cleaning and cooling
- SO_2 absorption
- Stripping and sulfate removal.

The gas stream is cleaned in a high-efficiency particulate collector and then cooled to saturation by direct water injection. In addition, any sulfuric acid mist present is removed in an electrostatic mist precipitator prior to gas-stream entry into the absorber. The cool, saturated gases are then vented to the bottom of an absorption tower, where they are contacted countercurrently with citrate absorbent. Gases exiting the absorber are passed through a mist eliminator and then vented to the atmosphere, while the loaded absorbent is pumped to a stripping tower. Stripping is accomplished by contacting the loaded absorbent with steam. The concentrated SO_2 stream produced, which contains a small amount of water vapor, is routed to a condenser, where most of the water is condensed out. The condensate, which contains only a small quantity of SO_2, is returned to the stripping column. Absorbent solution containing a small amount of SO_2 is withdrawn from the bottom of the stripper and pumped to a regenerator unit. During regeneration, the sodium citrate and sodium sulfate are separated from solution. This is accomplished by using seed crystals and a cooling unit to recover sodium citrate and remove sodium sulfate. Details of the regeneration system are presented in U.S. patent No. 3,886,069.[6] The sodium sulfate is discarded, and the recovered sodium citrate solution is recycled back to the absorber.

The concentrated SO_2 stream, which can be as high as 95 percent SO_2 with a water saturation temperature of approximately 30° C (85° F), can be routed directly to (1) a Claus plant for the production of elemental sulfur, (2) a contact sulfuric acid plant for the production of sulfuric acid, or (3) a refrigeration/condensation system for the production of liquid SO_2.

4.3.5.3 Design and Operating Considerations. Proper design and operation of the gas cleaning system is necessary to ensure efficient SO_2 removal in citrate-type systems. As with other types of scrubbing systems, the citrate systems require that the feed gas stream be cooled and thus humidified to prevent excessive evaporation of the absorbent solution. Because SO_2 absorption is favored by lower temperatures, the optimum feed stream temperature is established as a trade-off between mass transfer considerations and the costs of precooling.[5] Pilot-plant work sponsored jointly by the Bureau of Mines and the Magma Copper Company was conducted at temperatures between 42° C and 52° C (108° F and 125° F), with resulting SO_2 removal efficiencies in the range of 93 to 99 percent.[5] This particular pilot plant was placed into operation in November 1970 at Magma's San Manuel, Arizona, smelter and processed 8 m^3/min (300 cfm) of gas from a green-charged reverberatory furnace.

In the Bureau of Mines citrate process, adequate gas cleaning can be effected by a baghouse, a packed scrubber, an electrostatic precipitator, or a venturi scrubber.[6] In the Flakt-Boliden process, gas cleaning and conditioning is accomplished by routing the gas stream through a high-efficiency particulate collector such as an electrostatic precipitator and then cooling the stream to saturation by direct-water injection.[6] Passing the gas stream through an electrostatic mist precipitator prior to gas-stream entry into the absorber is deemed advantageous in both types of processes because sulfuric acid mist removal prior to absorption minimizes sodium sulfate formation in the absorber and thus minimizes the purge requirements.

The solubility of SO_2 in citrate-type absorbents is a function of the SO_2 partial pressure in the gas phase, the hydronium ion concentration, and the ionization constants of sulfurous acid.[5] The important process variables in the absorption step can thus be identified as:

- Absorbent solution pH
- Absorbent solution composition
- Feed-stream SO_2 concentration

- Feed-stream temperature
- Ratio of liquid-to-gas flow.

SO_2 absorption is increased by maximizing the pH and buffer content of the absorbent solution and minimizing the feed-stream temperature. Under actual operating conditions, the citrate concentration in the absorbent solution is established at the lowest level compatible with the feed-stream SO_2 concentration and requisite solution flows. The operating temperature selected balances the advantages of higher absorbent SO_2 loadings at the lower temperatures against the costs of feed-stream cooling. The actual absorbent recirculation rate chosen to achieve a specified SO_2 removal efficiency is dependent upon the absorbent citrate concentration required to effect the specified removal efficiency at a given feed-stream SO_2 concentration. In a Bureau of Mines pilot-plant program at the Bunker Hill lead smelter in Kellogg, Idaho, the absorbent flow rate used to treat a 30 Nm^3/min (1,000 scfm) stream from a lead sinter machine containing 0.5 percent SO_2 was about 38 ℓ/min (10 gal/min) of 0.5 M citrate solution.[5] The resultant SO_2 loading in the absorber offgas stream was approximately 10^7 mg/m^3 (4,400 gr/ft^3). With regard to the Bureau of Mines process, the absorbent solution pH is reported to be limited by factors that concern the SO_2 reduction procedure rather than by factors that govern the absorption step.[6] The pilot-scale work conducted by the Bureau of Mines at the Magma and Bunker Hill smelters has used an absorbent pH in the range of 4.0 to 4.6 and a 0.5 M citrate solution with a molar ratio of NaOH to citric acid of approximately 2.0. Operating temperatures at both installations ranged from 42° to 65° C (108° to 149° F).

L/G must be sufficiently high to ensure an adequate rate of SO_2 absorption. In a countercurrent, packed scrubber--the type of absorber chosen in both the Bureau of Mines and Flakt-Boliden processes--the L/G required is about 1.3 ℓ/m^3 (10 gal/1,000 ft^3).[6]

The Bureau of Mines work has also shown that SO_2 absorption is enhanced by the presence of thiosulfate. In practice, thiosulfate is introduced into the system as the regenerated absorbent is returned to

the absorption loop.[5] In the pH range of 4.0 to 4.5--the usual pH range of citrate absorbent solution--thiosulfate, trithionate, tetrathionate, and polythionate are all believed to be formed in the reduction/regeneration step of the Bureau of Mines process. These species, once formed, are thought to react with H_2S to yield elemental sulfur. Studies of the chemistry involved in the reduction/regeneration step have indicated that the reaction of H_2S with thiosulfate is the rate-determining process in this step.[5] Thus, by allowing the thiosulfate to build up in the system, the reaction rate is increased, which in turn causes a decrease in the size of the reactor required to provide the necessary residence time. For this reason, the presence of the thiosulfate ion in the absorbent solution is deemed essential in the Bureau of Mines process.

As with all closed-loop scrubbing systems, the accumulation of oxidation products, particulates, and other soluble impurities must be controlled by purging a portion of the recirculated absorbent solution. In the Bureau of Mines process, this purge consists primarily of sodium sulfate, and is taken from the vacuum crystallizer as mentioned in Section 4.3.5.2. Soda ash, Na_2CO_3, which is added to the absorbent recirculation loop, produces the sodium sulfate via reaction with the sulfate ion is present in the system. The resulting sodium sulfate is then readily removed after crystallization and filtration.

In the Bureau of Mines process, the sulfur slurry produced in the reduction/regeneration step is vented to a sulfur separation unit, where the sulfur is agglomerated by flotation with either kerosene or SAE-10 motor oil. While the use of kerosene is quite effective in this operation, it can be quite expensive. The use of kerosene and the resultant losses that occur as presently estimated by the Bureau of Mines constitute a major part of the total raw materials cost.[5] However, laboratory-scale tests have indicated that the use of SAE-10 motor oil should provide results equivalent to those obtained by the use of kerosene. In addition, predicted oil consumption would only be one-fourth that of kerosene.

Very little experience has been gained in the Bureau of Mines pilot-plant studies regarding onsite generation of H_2S for use as a

reductant. A reliable source of H_2S must be available to ensure uninterrupted operation of the Bureau of Mines process. However, due to the locations of the domestic primary copper smelters, onsite H_2S generation would probably be preferred based upon economical considerations and could conceivably be achieved by using a portion of the recovered sulfur, steam, and a reducing agent such as methane. Production of H_2S via this route is exothermic, and the hot product stream that exits the H_2S generation reactor can be used to preheat the sulfur feed to the reactor as well as to generate a portion of the steam required for H_2S generation.[6]

The Flakt-Boliden process uses steam stripping to produce a concentrated SO_2 stream from the absorber effluent. Thus, as shown in Figure 4-9, the absorber effluent is routed directly to a stripping column, where it is subjected to steam treatment in a countercurrent fashion. Due to the equilibrium behavior of the SO_2/H_2O system, the stripping process is best conducted at reduced pressure (down to approximately one-tenth of an atmosphere). The fact that stripping is conducted under a vacuum is favorable with regard to steam consumption, and low pressure steam or hot water can be used.[6] Equilibrium considerations also dictate the amount of steam required in the stripping process. Consequently, it is highly desirable to operate the stripper at the lowest possible temperature to reduce the steam requirement. Steam consumption in the stripper is also directly related to the feed-stream SO_2 concentration. In general, the higher the feed-stream SO_2 concentration, the lower the specific steam consumption.

There is little information in the literature regarding the design and operating considerations of the absorbent regeneration system used in the Flakt-Boliden process. Regeneration is accomplished by using seed crystals and a cooling unit to effect separation of sodium citrate and sodium sulfate. The sodium citrate is recycled to the absorber, and the sodium sulfate is discarded. The details of the regeneration system are contained in a U.S. patent, as mentioned in Section 4.3.5.2.

4.3.5.4 Operational Problems. The pilot-scale demonstrations have revealed a number of actual and potential problems in citrate-type scrubbing systems. The Bureau of Mines process is rather complex, and more development work is needed to increase the reliability of the process, especially with regard to the H_2S generation and sulfur handling systems.[6] As currently defined, the Bureau of Mines process uses natural gas, normally methane, in the production of H_2S. With the future availability of natural gas in doubt, its use is not very desirable. This consideration is also applicable to the use of kerosene or SAE-10 motor oil in the sulfur flotation step.

Mechanical problems have plagued every pilot-scale effort to date involving the Bureau of Mines process. The majority of these problems have occurred in the SO_2 reduction circuit. The problems experienced include gas cleaning system failures, frequent pump failures, and flow lines plugged with precipitates and melted sulfur.[6] Due to the frequency of the problems encountered, achieving complete steady-state operation has been difficult. Many problems did prove chronic and were never eliminated to the extent that system reliability could be increased to acceptable limits. However, the Bureau of Mines is looking into steam stripping of the loaded absorbent as an alternative to sulfur precipitation by H_2S,[6] which would, if adopted, transform the Bureau of Mines process into a process that would be essentially identical to the Flakt-Boliden process. This alternative would simplify the process significantly and would probably eliminate most of the aforementioned problems.

As suggested above, the Flakt-Boliden process has not involved the numerous problems on the pilot scale that the Bureau of Mines process has encountered. This is primarily due to the fact that the steam stripping procedure used by Flakt-Boliden is not nearly as complex as the SO_2 reduction/H_2S generation scheme employed in the Bureau of Mines process. As mentioned previously, the bulk of the problems that were encountered in the Bureau of Mines pilot studies occurred in the SO_2 reduction circuit. Pilot plant experience with the Flakt-Boliden process at the Ronnskar smelter in Sweden has been more successful in terms of demonstrating system reliability.[6]

4.3.5.5 Survey of Operating Experience. Neither the Bureau of Mines citrate scrubbing process nor the Flakt-Boliden citrate scrubbing process has been applied on a commercial scale. However, three pilot-scale studies that involved the Bureau of Mines process have been conducted in the United States, and pilot-scale testing of the Flakt-Boliden system has been conducted at the Ronnskar smelter in Sweden.

The Bureau of Mines, Salt Lake City Metallurgy Research Center, began research on FGD, with particular emphasis on the application of scrubbing technology for control of SO_2 emissions from the nonferrous smelting industry. Absorption in an aqueous solution of citric acid and sodium citrate was selected for intensive study due to the chemical stability, low vapor pressure, and buffering capacity of the absorbent.[6] The purity and physical character of the precipitated sulfur were also considered advantageous.

After promising bench-scale results were obtained, the Bureau of Mines, in conjunction with the Magma Copper Company, constructed and operated a pilot plant to remove SO_2 from reverberatory furnace offgases generated at Magma's facility in San Manuel, Arizona. This pilot plant, constructed in 1970, treated approximately 8.5 Nm^3/min (300 scfm) of gas from the reverberatory furnace containing 1.0 to 1.5 percent SO_2 and consistently removed 93 to 99 percent of the SO_2 from the gas stream. This system was consistently plagued by several problems, most of which occurred in the SO_2 reduction circuit, as mentioned in Section 4.3.5.4. Pump breakdowns and plugged flow lines were the most frequently encountered problems.[6] Failure of the gas cleaning system was also quite frequent. Because of the chronic nature of several of the problems encountered, useful data on the consumption of citric acid and other reagents were not obtained. However, as noted above, the system did achieve SO_2 removal efficiencies of 93 to 99 percent while in operation.[6]

Another pilot plant was constructed by the Bureau of Mines and operated jointly by the Bureau of Mines and the Bunker Hill Company at Bunker Hill's lead smelter in Kellogg, Idaho. This pilot plant had a nominal capacity of 28 Nm^3/min (1,000 scfm) of gas containing 0.5 percent SO_2, with a corresponding sulfur production of about 1/3 ton of sulfur

per day. The feed stream was taken as a slipstream from a Lurgi updraft sintering machine. Problems with the SO_2 reduction system plagued this pilot facility as well. Problems in maintaining a steady-state feed stream were also encountered. Many problems did prove to be chronic, thus preventing conclusive system tests.

A third pilot plant demonstrating the Bureau of Mines process was independently built and operated by Arthur G. McKee and Company, Peabody Engineering Systems, and Pfizer, Inc., at Terre Haute, Indiana, in 1972.[6] This facility treated approximately 57 Nm^3/min (2,000 scfm) of stack gas with an SO_2 concentration ranging from 0.1 to 0.2 percent from a coal-fired steam generating station. After several modifications to arrive at a final equipment configuration, the pilot plant operated from March 15 to September 1, 1974. Although operational difficulties prevented the steady-state operation of the entire system, SO_2 removal efficiencies were consistently in the range of 95 to 97 percent. The longest sustained run was 180 hours.

The Flakt-Boliden process has been applied on a pilot scale at the Ronnskar smelter in Sweden. The major reasons for installing this system were to establish a design background for the absorption/stripping process and to investigate the influences of various components in the raw gas on the oxidation of SO_2 in the absorbent.

The raw gases that comprise the feed stream to the scrubbing system originate in the multihearth roasters, electric furnaces, converters, and various lead smelting operations at the Ronnskar works. Because most of the metallurgical processes involved are not continuous, the SO_2 concentration in the effluent streams fluctuates between 0.2 and 6.0 percent by volume; however, the SO_2 concentration does remain approximately constant at one level or another for long enough periods to allow steady-state observations.

Flakt has reported that the test results look very promising, with oxidation rates at least an order of magnitude lower than those found in the Bureau of Mines process. Consequently, the requirement for makeup chemicals should be relatively low for the Flakt-Boliden process.[6] The removal efficiency associated with this pilot facility has not been published extensively in the literature; however, it is

thought to be in excess of 90 percent. Similarly, information on operational problems that may have been encountered is scarce.

Flakt is reportedly responsible for a new process development that significantly decreases steam consumption in the stripping step.[6] This could be especially important where gas streams with low SO_2 concentrations are to be processed because stripper steam consumption is not a linear function of feed-stream SO_2 concentration and can increase rapidly at low concentrations. As of this writing, however, no details regarding the specifics of this new development are available.

4.3.5.6 Applicability to Reverberatory Smelting Furnaces. As mentioned in Section 4.3.5.4, the Bureau of Mines process has experienced numerous problems, most of which occurred in the SO_2 reduction circuit; thus, the system was never able to demonstrate adequate reliability. However, when operable, the system did demonstrate the ability to effect SO_2 removal efficiencies of 93 to 99 percent from a 1.0 to 1.5 percent SO_2 stream that originated in green-charged reverberatory smelting furnaces at the Magma smelter. In addition, the system has proven its ability to handle extremely weak streams as a result of the 95 to 97 percent removal efficiencies achieved by the McKee-Peabody-Pfizer system while operating on coal-fired boiler offgases with an SO_2 concentration of 0.1 to 0.2 percent. Thus, if system reliability could be improved via the elimination of chronic operational problems, the system could be a viable option for the control of reverberatory furnace offgases. Nothing has indicated that the problems encountered thus far represent fundamental flaws in the application of the theory behind the system operation; however, reliable full-scale operation on either reverberatory furnace effluents or other comparable streams will have to occur before the system can be said to be fully demonstrated for the control of weak streams generated by reverberatory furnaces.

Perhaps the most significant drawback of the Bureau of Mines process is its requirement for kerosene (or SAE-10 motor oil) and natural gas. It has been estimated that the costs of these commodities alone would constitute 25 to 30 percent of the total annual direct

operating costs.[5] In addition, the uncertainty regarding the future availability of these commodities tends to make their use undesirable.

When the absence of the SO_2 reduction/H_2S generation steps and of other related sulfur handling equipment are considered, the Flakt-Boliden process is relatively simple compared to the Bureau of Mines process. In lieu of the problems associated with the aforementioned operations, steam stripping of the absorber effluent may be an attractive alternative. The supply of steam at a smelter should not be a critical item because it is normally advantageous to strip at reduced pressure, which allows the use of low-quality steam or even hot water. However, this system has not been demonstrated in areas where the supply of water may be a critical item.

Full-scale applications of the cold water scrubbing process at the Ronnskar smelter have resulted in SO_2 removal efficiencies in the range of 98 percent.[28] Therefore, because the addition of the citric acid/sodium citrate buffer is known to increase SO_2 absorption efficiency, it would be natural to assume that a full-scale application using the citrate absorbent would be at least equally efficient. However, full-scale application of the system to either reverberatory furnace offgases or other comparable streams would have to be demonstrated with adequate reliability before the system could be considered to be a technically viable control alternative for weak streams from reverberatory furnaces.

In summary, both the Bureau of Mines process and the Flakt-Boliden process require further development before they can be considered technically viable weak-stream control options. Additional developmental work will be required to eliminate the numerous problems associated with the Bureau of Mines process before a commercial-scale application would be feasible. The Flakt-Boliden process, due to its relative simplicity, has great potential for weak-stream control; however, a commercial-scale application that uses the citrate-type absorbent will be required to demonstrate that the system can achieve the required level of SO_2 removal efficiency while maintaining high reliability. Furthermore, with the Flakt-Boliden system, product flexibility is obtained because the concentrated SO_2 stream produced can be liquefied

to produce liquid SO_2, fed to a Claus plant to produce elemental sulfur, or fed to a conventional sulfuric acid plant to produce sulfuric acid.

4.3.6 Conclusions Regarding Flue Gas Desulfurization Systems

Sections 4.3.2 through 4.3.5 present discussions of six FGD processes based upon four different types of chemical systems. These are summarized in Table 4-7.

Although primary, ammonia scrubbing with ABS acidulation and both types of citrate scrubbing systems are not considered demonstrated because of a lack of full-scale demonstration. Of the three systems that remain, two (lime/limestone and magnesium oxide scrubbing) have been applied to green-charged reverberatory furnace offgases on a full-scale basis, while the other (ammonia scrubbing with sulfuric acid acidulation) has been applied to metallurgical offgases from several sources on a full-scale basis. These systems, along with their reported SO_2 removal efficiencies and reliabilities, are summarized in Table 4-8.

All of these systems have proven capable of achieving their design SO_2 removal efficiencies. Operating experience suggests that the limiting factor is system reliability. However, while all three types of systems have experienced operational problems that hindered system reliability, the most severe problems have been eliminated or minimized to acceptable levels. Consequently, the reliability of these systems should be acceptable. The only possible exception might be the MAGOX system, for which reliability data are scarce.

Because none of these systems has been applied to a calcine-charged reverberatory furnace that uses Wagstaff charging, concern has been indicated regarding their ability to handle fluctuations in the gas-stream SO_2 concentration. The following paragraphs summarize the capability of these systems to handle fluctuations in the feed-stream SO_2 concentration.

Consider the typical absorber (scrubber) illustrated in Figure 4-10. To ensure that the absorber SO_2 removal efficiency remains constant at a specified level over the range of possible gas-stream

TABLE 4-7. FLUE GAS DESULFURIZATION PROCESSES ASSESSED FOR APPLICATION TO REVERBERATORY FURNACE OFFGASES

	Process	Type of absorbent used
1.	Lime/limestone scrubbing	Calcium-based
2.	Ammonia scrubbing with sulfuric acid acidulation (the "Cominco" process)	Ammonia-based
3.	Ammonia scrubbing with ammonium bisulfite (ABS) acidulation	Ammonia-based
4.	Magnesium oxide scrubbing (the MAGOX process)	Magnesium-based
5.	Bureau of Mines citrate scrubbing process	Based upon a citric acid-sodium citrate buffer
6.	Flakt-Boliden citrate scrubbing	Based upon a citric acid-sodium citrate buffer

TABLE 4-8. EFFICIENCY AND RELIABILITY DATA FOR THE FGD PROCESSES BEING CONSIDERED IN THE NSPS REVISION FOR PRIMARY COPPER SMELTERS

Type of FGD system	Origin of the feed gas stream	Reported SO_2 removal efficiency, %	Reported reliability	Data source(s)
Lime/limestone	Molybdenum ore roaster (0.35 to 0.75% SO_2)	92 to 96	Good. Problems with plugging and scaling overcome.	Weisenberg, I. J., T. Archer, F. M. Winkler, and A. Prem. Feasibility of Primary Copper Smelter Weak SO_2 Stream Control. Prepared for IERL, U.S. Environmental Protection Agency, Cincinnati, Ohio, under EPA Contract No. 68-03-2378. Publication No. EPA-600/2-80-152. July 1980. Background Information for New Source Performance Standards: Primary Copper, Lead, and Zinc Smelters, Volume I: Proposed Standards. U.S. Environmental Protection Agency. Research Triangle Park, N.C. Publication No. EPA 450/2-74-002a. October 1974.
	Primary copper smelter reverberatory furnace[a] (-2.5% SO_2)	99.5	Approximately 99.3%. Problems with scaling overcome.	Kohno, H., and Y. Sugawara. SO_2 Pollution Control with the Lime-Gypsum Process at the Onahama Smelter. (Presented at the AIME Annual Meeting. Chicago. February 22-26, 1981.) Slack, A. V. Application of Flue Gas Desulfurization in the Non-Ferrous Metals Industry. (Presented at the AIME Annual Meeting. Chicago. February 22-26, 1981.)
	Coal-fired utility boilers (0.04 to 0.4% SO_2)	90+	In excess of 90%.	Background information for New Source Performance Standards: Electric Utility Steam Generating Units, Background Information for Proposed SO_2 Emission Standards. U.S. Environmental Protection Agency, Research Triangle Park, N.C. Publication No. EPA 450/2-78-007a. July 1978.
Cominco Ammonia	Dwight-Lloyd sintering machines, zinc roasters and sulfuric acid plant tail gases (0.3 to 7.0% SO_2)	90 to 98	Good. No plugging or scaling since the absorbent is a solution rather than a slurry	Background Information for New Source Performance Standards: Primary Copper, Lead, and Zinc Smelters, Volume I: Proposed Standards. U.S. Environmental Protection Agency. Research Triangle Park, N.C. Publication No. EPA 450/2-74-002a. October 1974. Weisenberg, I. J., T. Archer, F. M. Winkler, and A. Prem. Feasibility of Primary Copper Smelter Weak SO_2 Stream Control. Prepared for IERL, U.S. Environmental Protection Agency, Cincinnati, Ohio, under EPA Contract No 68-03-2378. Publication No. EPA-600/2-80-152. July 1980. Matthews, J. C., F. L. Bellegia, C. H. Gooding, and G. E. Weant. SO_2 Control Processes for Nonferrous Smelters. Research Triangle Institute. Research Triangle Park, N.C. Publication No. EPA-600/2-76-008. January 1976.

TABLE 4-8 (continued)

Type of FGD system	Origin of the feed gas stream	Reported SO_2 removal efficiency, %	Reported reliability	Data source(s)
MAGOX	Primary copper smelter reverberatory furnace[a] (-2.5% SO_2)	99+	--[b]	Weisenberg, I. J., T. Archer, F. M. Winkler, and A. Prem. Feasibility of Primary Copper Smelter Weak SO_2 Stream Control. Prepared for IERL, U.S. Environmental Protection Agency, Cincinnati, Ohio, under EPA Contract No. 68-03-2378. Publication No. EPA-600/2-80-152. July 1980.
	Coal-fired utility boilers (0.04 to 0.4% SO_2)	90+	17 to 80%[c]	Background Information for New Source Performance Standards: Electric Utility Steam Generating Units, Background Information for Proposed SO_2 Emission Standards. U.S. Environmental Protection Agency, Research Triangle Park, N.C. Publication No. EPA 450/2-78-007a. July 1978.
				Maxwell, M. A., and G. R. Koehler. The Magnesia Slurry SO_2 Recovery Process Operating Experience with a Large Prototype System. (Presented at the AICHE Annual Meeting. New York. November 26-30, 1972.)

[a]Located at the Onahama smelter in Japan.

[b]No reliability data given.

[c]Based on data presented for Boston Edison's Mystic No. 6. System reliability improved steadily as operational problems were alleviated.

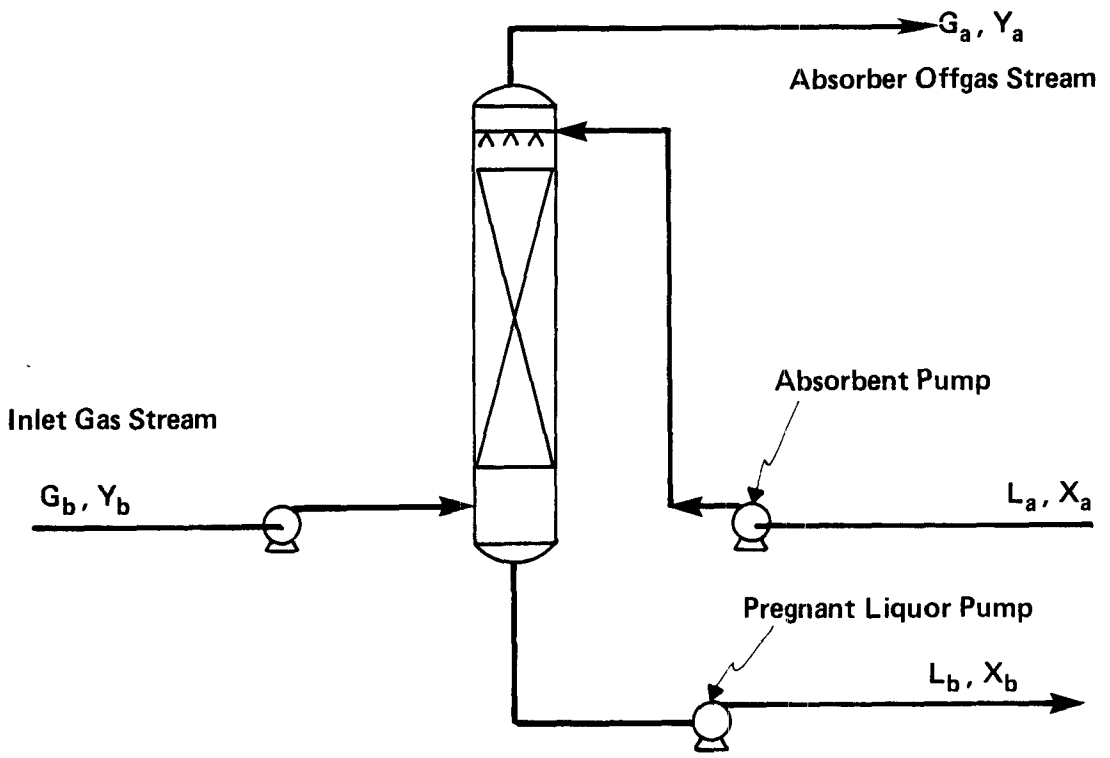

LEGEND

G = gas stream molar flow rates
L = liquid stream molar flow rates
Y = gas phase pollutant mol fraction
X = liquid phase pollutant mol fraction

a = process streams entering or exiting at the top of the absorber
b = process streams entering or exiting at the bottom of the absorber

Figure 4-10. Typical absorber configuration.

SO_2 concentrations, proper measures must be taken in the design stage. To qualitatively determine how fluctuations in the gas-stream SO_2 concentration will effect the performance of a given scrubber, one must examine the equilibrium and operating relationships that are involved. Fluctuations in SO_2 concentration below that specified in the design basis should actually enhance the SO_2 removal efficiency. Fluctuations above the design basis will, however, cause the SO_2 removal efficiency to decrease if L/G is held constant. Thus, to ensure that the specified SO_2 removal efficiency can be maintained, provisions must be made during the design stage to ensure that the absorbent flow rate to the column, and thus L/G, can be increased when fluctuations on the high side of the design basis are encountered. This would involve sizing the absorbent pump to handle the expected maximum pumping duty, while ensuring that all of the equipment downstream of the absorber(s) could operate efficiently at the higher absorbent flows. Consequently, it is reasonable to assume that any designer, given the gas-stream profile, would account for anticipated fluctuations in the gas-stream SO_2 concentration by providing the necessary provisions in terms of solvent handling capability and process control. In actual practice, this is normally accomplished by incorporating some "overdesign" into the systems. For instance, if a 90-percent SO_2 removal efficiency is desired at all times, the system should be designed to achieve a somewhat higher SO_2 removal efficiency so that fluctuations in the inlet gas stream SO_2 concentration will not cause the efficiency to drop below 90 percent at any time. This would involve providing more area for mass transfer (using larger absorbers) as well as the items mentioned above. Since, in reality, process control systems do have inherent time lags, some overdesign would ensure that these systems could maintain the desired SO_2 removal efficiency. Based upon the actual operating data presented in Section 4.3.2 through 4.3.5, as well as on engineering judgment, EPA has concluded that any of the systems presented in Table 4-8 designed to operate with an SO_2 removal efficiency of 99 percent (at the highest anticipated SO_2 concentration) should not exhibit SO_2 removal efficiencies

below 90 percent as a result of the short-level fluctuations inherent in offgases from calcine-charged reverberatory furnaces. Thus, 90 percent has been specified as a reasonable level of SO_2 control for these FGD systems in light of the anticipated maximum reverberatory furnace SO_2 concentration (~2.0 percent).

4.4 INCREASING THE SO_2 STRENGTH OF REVERBERATORY FURNACE OFFGASES

The quantity of sulfur emitted from reverberatory furnaces as SO_2 averages about 22 percent (by weight) of the total sulfur entering the smelter. However, this sulfur quantity can be as high as 34 percent for green charge or as low as 9 percent for calcine charge produced by a fluid-bed roaster.[6] A survey[29 30 31] of the domestic reverberatory furnace installations indicates that the SO_2 concentration in the offgases is typically in the range of 1.0 to 2.0 percent for green-charged furnaces and 0.4 to 1.5 percent for those using calcine feed.* As noted previously, these concentrations are too low for economically processing in conventional contact sulfuric acid plants.

Options to be considered for facilitating the control of reverberatory furnace offgases fall into two major categories. The first group includes control systems that are applied directly to the weak SO_2 stream. These are discussed in Section 4.3. The second group includes furnace operating modifications, which can lead to an increase in the concentration of SO_2 in the offgases and thus facilitate acid plant control. Such operating modifications include the following:

- Elimination of converter slag return
- Minimizing infiltration
- Preheating combustion air
- Operation at lower air-to-fuel ratio
- Predrying wet charge
- Oxygen enhancement techniques.

Each of these techniques is discussed in subsequent subsections. Although these techniques have been used at various smelters, in most

---

*SO_2 concentrations after gas cleaning, dry basis.

cases they have been applied not to obtain control-related benefits but to improve operating conditions and/or increase production. Discussion of the first five operating techniques is based primarily on information from Reference 6.

4.4.1 Elimination of Converter Slag Return

As discussed in Section 3.2.2.1, converter slag is typically returned to reverberatory furnaces to recover copper. These slags are charged while molten by pouring them into a chute or launder leading to an opening in the furnace wall. Fifty or more ladles of converter slag can be returned in a 24-hour period, depending upon the number of converters and the smelter throughput rate.[6] Converter slag return is employed by most domestic smelters using reverberatory furnaces.

In contrast to reverberatory furnace slag, converter slag is high in magnetite content--normally 17 to 35 percent.[6] To some extent, the magnetite reacts with iron sulfide in the bath to release SO_2. However, each time converter slag is returned, a large volume of air enters the furnace (which is kept under a slight negative pressure). The net effect is a reduction in the average SO_2 concentration, although no data are available with regard to the extent by which the SO_2 concentration is reduced. An additional disadvantage of converter slag return to reverberatory furnaces is that adding converter slag can lead to magnetite buildups on the furnace bottom.

An alternative to processing converter slag in reverberatory furnaces directly is to use the flotation process to recover the copper content of this material. The flotation process requires slow cooling of the slag to allow the growth of crystalline particles of sufficient size to be amenable to flotation. Cooling requirements are on the order of 1 to 2 days. Following cooling, the slags are ground to liberate the copper-containing mineral particles. Grinding to at least 85 percent minus 200 mesh is not uncommon.[6] It should be noted, however, that the elimination of converter slag return may not be feasible at some smelters due to inadequate capacity in the flotation circuit.

4.4.2 Minimizing Infiltration

The general objective in the operation of the reverberatory furnace is to maintain a slight negative pressure (1.2×10^{-5} atm to 1.2×10^{-4} atm [1.22 to 12.2 Pa] in the furnace. This practice prevents gases from escaping through any openings and draws some outside air into the furnace. Of course, the lower the pressure, the greater the amount of air entering will be. Excessive infiltration into the furnace proper is undesirable because the air must be heated to furnace temperatures, which wastes fuel. With regard to possible acid plant control of the offgases, infiltration is undesirable because it reduces the SO_2 concentration.

Although the volume of infiltrated air is strongly affected by the furnace pressure, the number and the size of the openings are also major factors. Sources of infiltrated air to the furnace proper include, in addition to the converter slag return port, charge feed system openings, furnace repair ports, spaces around burners, and expansion spaces between bricks. Infiltration also occurs through expansion spaces in the furnace uptake and through waste heat boilers and ESP's downstream of the furnace. Infiltration from the latter sources does not affect operation of the furnace but does serve to decrease the SO_2 concentration of the offgases. Minimizing the infiltration occurring from all sources has the advantage of reducing the offgas volume, which allows for the use of smaller gas handling equipment and reduces gas handling energy requirements.

It appears that, due to the energy requirement for heating air entering the furnace, only sufficient air to achieve complete combustion and to allow the oxidation of labile sulfur is permitted to enter the furnace proper under current operating practice. For example, at ASARCO smelters, which use natural gas fuel, air inleakage is regulated such that approximately 1 percent oxygen* is maintained in the offgases

---

*This low oxygen level may not be achievable with other types of fuels, which require more excess air for combustion (see Section 4.4.4).

entering the furnace uptake.[30] However, indications are that substantial infiltration typically occurs downstream of the furnace,[32] in the waste heat boiler and ESP, primarily because there has heretofore been no need for eliminating such dilution to enhance SO_2 control.

The most extensive work performed to reduce infiltration in a reverberatory furnace and associated gas handling equipment specifically to facilitate SO_2 control was conducted at the Onahama smelter in Japan. At this furnace, it was indicated that the draft was rigidly controlled to prevent the intake of any excessive air, although particulars of the draft control system were not described. Also, an extensive sealing effort was employed to eliminate air leaks through crevices, burner clearances, openings in the furnace roof, sidewalls, fettling chutes, damper slots, expansion joints, peep holes, cleaning doors, and, especially, dust-discharging hoppers of the boilers and the ESP.[6] The result was a reduction in the total air infiltrated into the furnace and flue from a level of approximately 50 percent of the furnace gas at the uptake to less than 15 percent. The reduction in infiltration led to an increase in the SO_2 concentration of approximately 0.4 percentage points.[27] Ongoing maintenance at Onahama includes repairing and replacing portions of the furnace roof every 6 months to minimize inleakage.

4.4.3 Preheating Combustion Air

Preheating the furnace combustion air can increase the concentration of SO_2 in the exhaust gases. The increase results because the sensible heat content of the air serves to decrease the fuel requirement, which in turn results in a smaller volume of combustion products.

The use of preheated air for natural gas combustion is usually required to increase the flame temperature, which, in turn, increases the rate of heat transfer to the melt by radiation and convection. The use of preheated air for oil and coal combustion can, however, produce furnace control and durability problems because of the higher flame temperatures.[6]

At the Onahama smelter, preheating of the secondary air to the oil burners has increased the smelting rate. No operational problems

were reported by Onahama.[33] The resulting increase in SO_2 strength has been estimated at 0.1 to 0.2 percentage points.[6]

4.4.4 Operation at Lower Air-to-Fuel Ratio

The quantity of combustion air supplied to the furnace burners has a direct effect on the SO_2 concentration in the furnace offgases. Introducing less air will result in higher offgas SO_2 concentrations.

The theoretical amount of air required to combust a given amount of fuel is that necessary to complete the oxidation of all of the carbon, hydrogen, and sulfur contained in the fuel. In most cases, however, excess air (more than the theoretical amount) is supplied to ensure complete combustion because the air and fuel are not perfectly mixed. The quantity of excess air supplied should not exceed the level at which the heat lost to the additional air exceeds the heat gained from the combustion of additional fuel.

The quantity of excess air used in firing reverberatory smelting furnaces varies depending upon the type of fuel burned. Because gaseous fuels mix with air easily, natural gas burners can achieve essentially complete combustion using a relatively small amount of excess air (between 0 and 10 percent). Thorough mixing of liquid fuels with air is more difficult to achieve, and, as a result, oil fuels require up to 18 percent excess air. Solid fuels, such as ground coal, are the most difficult to combust completely and require from 12 to 50 percent excess air.

The average SO_2 concentration of 2.6 percent in the offgases from the Onahama reverberatory furnaces is partially attributed to operation at a low air-to-fuel ratio.[6] These furnaces, which are fired with oil, operate at approximately 10 percent excess air.[6] The air entering at the burner end of each furnace is actually less than the theoretical requirement--the balance being supplied by infiltration.

While operation of the Onahama furnace with a fuel-rich mixture does not provide maximum heat release within the furnace, it does (in addition to increasing the SO_2 concentration) increase furnace durability and reduce the formation of NO_x. Originally, 500 ppm NO_x resulted when operating on the oxygen-rich side. When the air-fuel ratio was reduced to the fuel-rich side, the NO_x concentration dropped to 100 ppm.[6]

4.4.5 Predrying Wet Charge

Ore concentrates processed in green-charged reverberatory furnaces typically contain from 5 to 15 percent moisture. As the moisture is eliminated in the furnace offgases, it contributes to the dilution of SO_2.

Processing green charge in concentrate dryers allows some increase in the concentration of SO_2 from the reverberatory furnace by eliminating the dilution effect of the moisture (although no data on the magnitude of the increase are available). Other advantages also result. Concentrate drying results in an overall decrease in fuel consumption because the temperature of the moisture is raised to only about 80° C (180° F) in the dryer, as compared to 1,290° C (2,350° F) in the furnace. Also, by eliminating moisture. the possibility of steam-induced pressure surges or destructive steam explosions in the furnace is greatly reduced. Perhaps the major disadvantage to use of a dryer is the capital outlay required for the unit and associated feed handling equipment.

4.4.6 Oxygen Enhancement Techniques

Oxygen enhancement involves the substitution of pure oxygen for all or a portion of the combustion air fed to a piece of smelting equipment by a variety of separate techniques. A number of these techniques are currently used by the smelting industry worldwide. Use of oxygen enhancement results in an increase in the SO_2 concentration in the exhaust gases and could lead to the production of an acid-plant-strength gas. A major cause of the increased concentration is the elimination of the nitrogen associated with air when it is used for combustion. Because air contains 79 percent nitrogen and only 21 percent oxygen, the dilution effect associated with the nitrogen in the air is evident. The decrease or elimination of nitrogen also results in a reduction in the size and cost of all downstream gas handling and processing equipment. Another factor contributing to increased SO_2 concentrations in the case of some techniques (e.g., oxygen-sprinkle smelting and roof oxygen lancing) is increased sulfur removal. Other

major advantages associated with oxygen-enhancement include increased furnace capacity, or a decrease in fuel usage for a fixed furnace capacity. These aspects are discussed in Section 3.4.3.5.

4.4.6.1 Survey of Experience with Oxygen Enhancement. The advantages of oxygen enhancement techniques in reverberatory furnaces from the production and pollution control standpoints have been emphasized by numerous authors.[26 33 49] All of the theoretical and experimental studies on oxygen enhancement in reverberatory furnaces show that the SO_2 concentration in the flue gas stream increases with the use of oxygen. Thus, the use of oxygen enhancement techniques to alleviate the weak stream control problem is a real possibility.

Various methods of introducing oxygen into the reverberatory furnace have been used to date. These may be categorized as follows:

- Oxygen introduced directly with fuel in oxygen-fuel burners
- Oxygen mixed with primary air and introduced into the existing burner system (oxygen enrichment)
- Undershooting the flame with oxygen or oxygen-enriched air
- Oxygen lancing of the molten furnace bath
- Oxygen sprinkle smelting

Illustrations of these alternative methods of oxygen introduction are presented in Figure 4-11.

Itakura et al.[35] and Goto[33] report using oxygen-fuel burners at the Onahama smelter and refinery. The result was an increase of 0.3 percentage points in the flue gas SO_2 concentration per oxy-fuel burner used,[33] or a total increase of 0.6 percentage points for the 2-burner configuration.

The work at the Caletones smelter[41] with oxy-fuel burners indicated that SO_2 concentrations between 5.7 and 7.3 percent (on a dry basis) could be attained with a full-scale, green-charged reverberatory furnace. This was accomplished by burning all of the fuel with industrial grade oxygen (97 percent pure) in individual oxygen-fuel burners located in the roof of the furnace. Processing of a nickel calcine

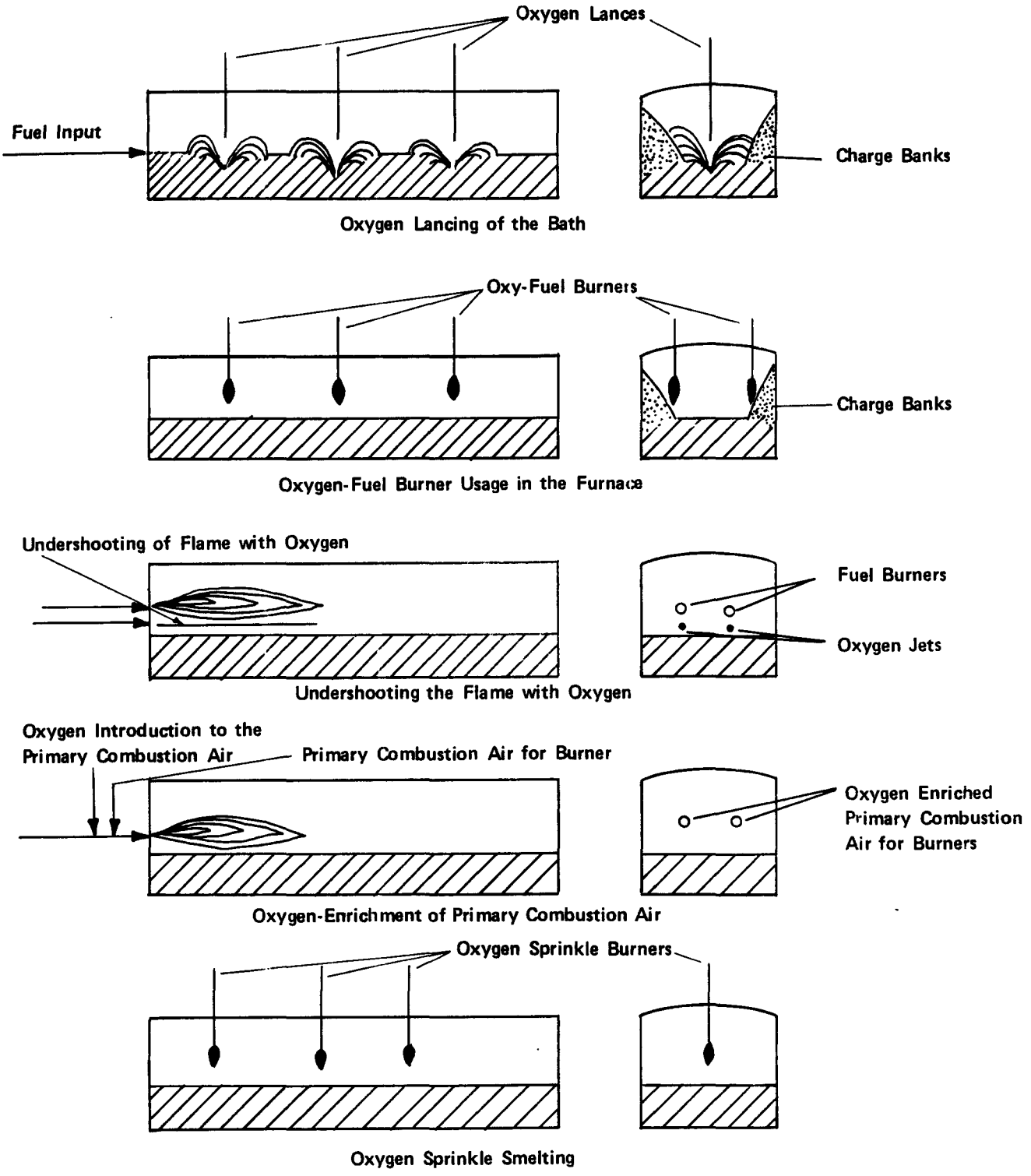

Figure 4-11. Methods of oxygen addition.

charge by the same technique at the Inco Copper Cliff smelter indicated that offgas SO_2 concentrations of 5 to 6 percent, as measured in the furnace offtake, could be achieved.[48]

A number of smelters have conducted studies involving oxygen enrichment of the combustion air. Pluzhnikov et al.[37] report oxygen enrichment of primary combustion air using roof-mounted burners at Noril'sk Ore-Mining Combine. Kupryakov et al.[38] report using oxygen-enriched primary air in burners at the Almalyk copper smelter. Achurra et al.[41] report on limited tests made with oxygen enrichment of the primary burner air at the Caletones smelter. Wrampe et al.[39] report Linde's experience with oxygen enrichment of the combustion air in domestic reverberatory furnaces.

As mentioned previously, all of the theoretical and experimental studies on oxygen enrichment indicate that the SO_2 concentration in the flue gas stream increases with oxygen enrichment. Wrampe et al.[39] present a model that expresses the flue gas SO_2 concentration in terms of the smelting rate and the degree of oxygen enrichment. The relationship between the flue gas SO_2 concentration and the degree of oxygen enrichment as given by the model[39] and the results of studies conducted by Kupryakov were compared and found to be in reasonable agreement. At a constant fuel rate with 21 and 25 percent oxygen content in the combustion air, the model projects flue gas SO_2 concentrations of 3.6 and 5.5 percent, respectively. For the same levels of enrichment, Kupryakov's investigations yielded offgas SO_2 concentrations of 3.4 and 5.2 percent. Kupryakov's results appear somewhat high because measurements were made at the furnace outlet, i.e., upstream of the gas-handling equipment. The data are assumed to be on a dry basis. The figure of merit with regard to Kupryakov's work is the percentage increase in the SO_2 concentration with oxygen enrichment, which amounts to 53 percent. As reported by Eastwood et al.,[36] theoretical investigations at the Rokana smelter have predicted that, with 30 percent oxygen in the primary combustion air, reverberatory furnace offgas SO_2 concentrations could be increased from an initial value of 1.1 percent to 2.0 percent on a dry basis, which amounts to an 82-percent increase

in SO_2 concentration. The theoretical concentrations appear to pertain to the furnace outlet. The difference in initial SO_2 concentrations (before oxygen enhancement) reported by Kupryakov and Eastwood could be attributed to differences in the pyritic sulfur content of the charge and/or weaknesses in the theoretical model used at the Rokana smelter.

Undershooting the flame with oxygen or oxygen-enriched air has been studied at several smelters. Saddington[34] and Kupryakov[38] report that studies of this nature have been performed at the Inco Copper Cliff and Almalyk smelters, respectively. Eastwood et al.[36] report on experience accumulated at the Rokana smelter.

Beals et al.[40] report SO_2 concentrations as high as 18 percent with oxygen lancing of the bath. These data resulted from tests conducted in a pilot-scale furnace. Beals currently has a patent assigned to Kennecott for using oxygen lancing of the melt to increase production and to obtain a high SO_2 concentration in the flue gases. Achurra et al.[41] report on limited investigations made with roof-mounted oxygen lances at the Caletones smelter.

Oxygen sprinkle smelting has been largely developed by Queneau and Schuhmann.[47] This method involves retrofitting existing reverberatory furnaces with oxygen sprinkle burners as illustrated in Figure 4-12. In this process, which operates on the same principle as flash smelting, dry concentrate charge is burned with commercial oxygen, and the molten droplets of charge fall to the hearth below. The SO_2 concentration produced with oxy-sprinkle smelting is expected to be in the 20 to 30 percent range.[49]

Detailed discussions of the most significant applications of oxygen-related technology are presented in the following sections.

4.4.6.1.1 Use of oxygen at the Caletones smelter. Development work involving the use of oxygen in a reverberatory furnace began at the Caletones smelter in Chile during 1971.[41] The use of oxy-fuel firing began in 1974, with the retrofit of a single burner onto the roof of the green-charged No. 3 furnace. By mid-1976, the furnace was operated with 12 oxy-fuel burners and none of the conventional burners.

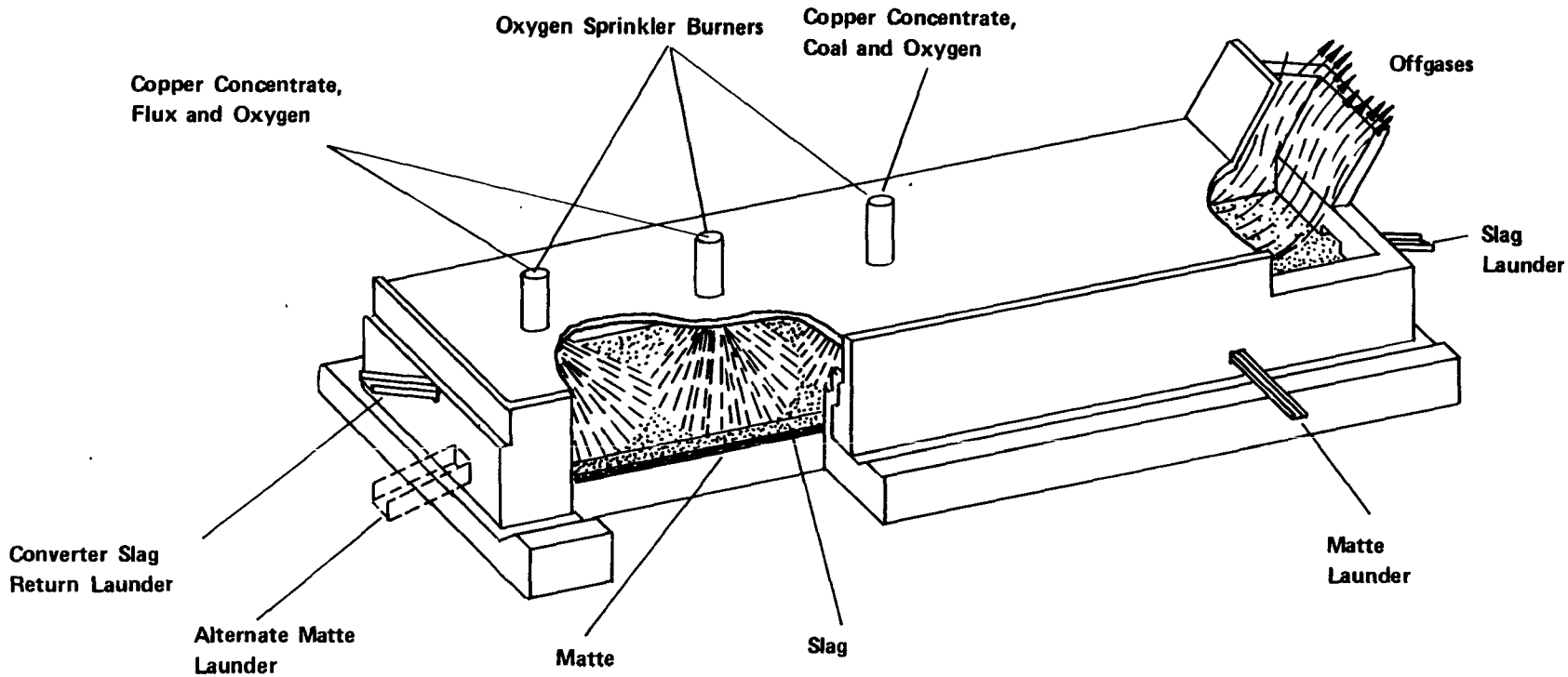

Figure 4-12. Conventional copper reverberatory smelting furnace that has been converted to an oxygen sprinkle smelting furnace.[47]

The positions of the oxy-fuel burners in the furnace roof are shown in Figure 4-13. A top view of the furnace is illustrated in Figure 4-14. Oxy-fuel burner dimensions and operating data are presented in Table 4-9. The technique of full oxy-fuel firing is considered successful by Caletones[42] and apparently was in use as of May 1977. More up-to-date information on oxy-fuel firing at Caletones is not available.

The matte grade is approximately 49 percent with full oxygen usage (all fuel burned with commercial oxygen), while the copper content of the slag is 0.7 percent. The use of calcium carbonate as flux could be discontinued due to higher slag temperatures that resulted from the use of 100 percent oxygen. The increase in matte temperature also minimized magnetite buildup on the furnace bottom. In addition, refractory wear on a per-ton-of-copper-produced basis was either less or the same as previously encountered.

The production rate of Reverberatory Furnace No. 3 at the Caletones smelter was increased from 686 dry Mg/day (755 dry tons/day) to 1,520 dry Mg/day (1,670 dry tons/day) with the use of the oxy-fuel burners. Overall energy usage (including oxygen manufacture) was reduced from 1.6×10^6 kcal/Mg (5.9×10^6 Btu/ton) of material smelted without oxygen to 1.1×10^6 kcal/Mg (4×10^6 Btu/ton) with full oxy-fuel firing.[42] The latter value represents a net decrease in energy usage of 32 percent. The oxygen rate at the elevated production level was 345 Mg/day (380 tons/day).

The most significant result from a pollution control standpoint is the SO_2 concentration in the offgases, which was measured at 5.7 and 5.8 percent on a dry basis for the 12-burner configuration.* The location of measurement was not reported; however, it was indicated that the gas is suitable for acid plant control.[42] The SO_2 concentration in the offgases before oxy-fuel burners were used was likewise not reported.

---

*A concentration of 7.3 percent SO_2 on a dry basis was measured for a 10-burner configuration. The increase in concentration, when compared to the 12-burner configuration, was attributed to a change in the feed composition.[41]

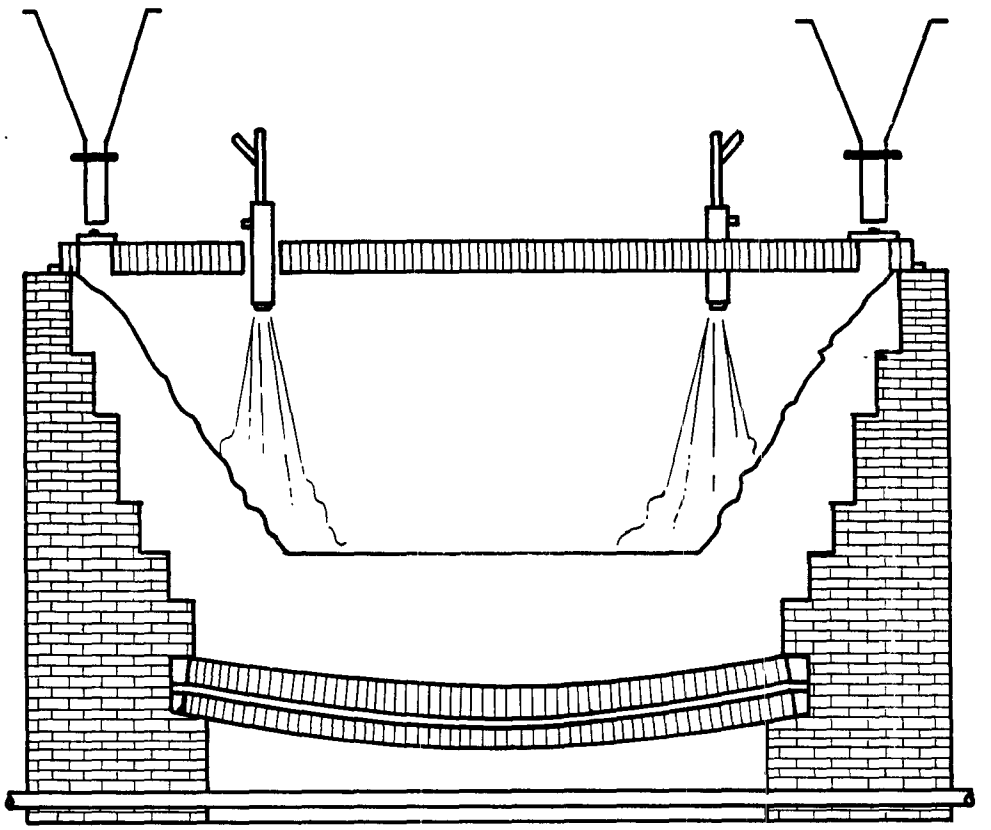

Figure 4-13. Oxy-fuel burner locations in Reverberatory Furnace No. 3 at the Caletones smelter.

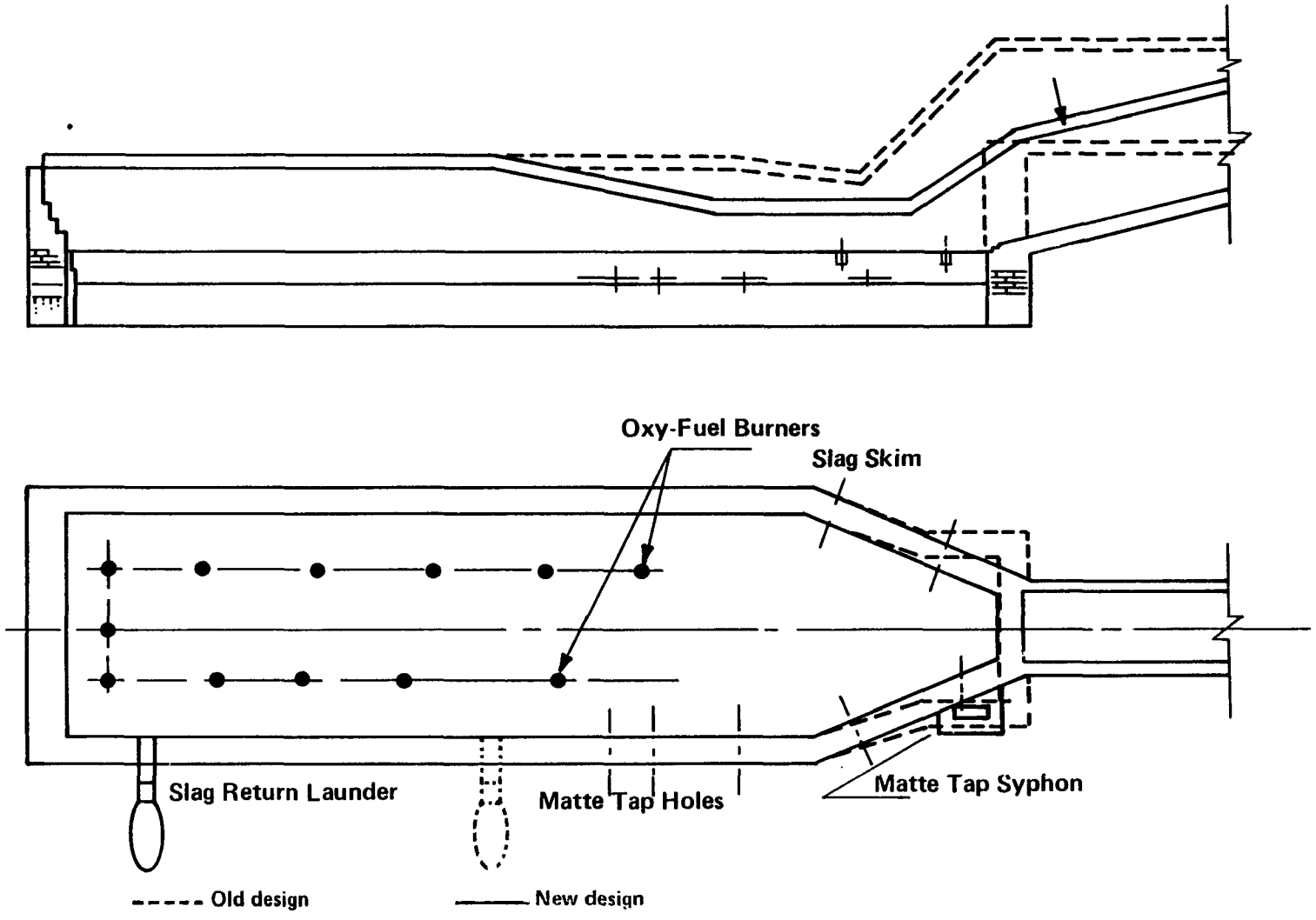

Figure 4-14. Plan and elevation of Reverberatory Furnace No. 3 (Oxy-fuel burner locations are shown in plan view).

TABLE 4-9. GENERAL SPECIFICATIONS[a] OF THE TYPE OF OXY-FUEL BURNER EMPLOYED AT THE CALETONES SMELTER[41]

Burner dimensions	
Length	94 cm (37 in.)
Outside diameter	15.2 cm (6 in.)
Fuel rate[b]	12 ℓ/min (3.17 gpm)
Oxygen rate	35.0 Nm^3/min (1,236 ncfm)
Oxygen pressure	2.04 atm (30 psi)
Oil pressure	6.80 atm (100 psi)
Cooling water rate	11.5 ℓ/min (3.04 gpm)
Noise level	90 dB

[a]Data pertain to maximum firing rate.

[b]Fuel type: ENAP-6 oil, with a heating value of approximately 10,200 kcal/kg.

4.4.6.1.2 Use of oxygen at the Onahama smelter. In 1971, the first of two oxygen-oil burners was installed in a green-charged reverberatory furnace at the Onahama smelter in Iwaki City, Japan.[33] Table 4-10 presents the general specifications of the type of burner employed at Onahama.[35] Two burners are presently being used when furnace capacity must be increased. The burners penetrate the roof vertically.

Table 4-11 summarizes reverberatory furnace operating data for two time periods--one prior to the installation of the oxy-fuel burners and one during operation of two oxy-fuel burners. As indicated, the charging rate was increased from 22,520 Mg (24,770 tons) per month to 27,200 Mg (29,920 tons) per month with the use of the two oxy-fuel burners--a gain of about 21 percent in throughput. The corresponding oxygen consumption rate was 667,060 Nm^3/month (2.4×10^7 scf/month). Fuel consumption during conventional operation (without oxygen) was approximately 170.0 ℓ/Mg (41.0 gal/ton) charge, while consumption at the increased production rate (with 2 oxy-fuel burners) decreased to 146.0 ℓ/Mg (35.0 gal/ton) charge in the furnace proper.

The use of oxy-fuel burners at Onahama was reported to result in an increase in SO_2 concentration of 0.3 percentage points per oxy-fuel burner, which amounts to an increase of 0.6 percentage points for the 2-burner configuration. The initial SO_2 concentration (before oxy-fuel burner operation) was 1.5 percent.[27] This value appears to have been measured after gas cleaning, and is assumed to be on a dry basis.

It appears that SO_2 concentration data obtained at Caletones and Onahama are fairly consistent, when examined on the same basis. If the initial SO_2 concentration (before oxygen usage) at Caletones is assumed to be approximately 1.5 percent, then each burner in the 12-burner configuration increases the SO_2 concentration by about 0.35 percentage points.

4.4.6.1.3 Use of oxygen at Inco's Copper Cliff smelter. The Inco Copper Cliff smelter in Ontario, Canada, processes nickel calcines in two reverberatory furnaces fitted with roof-mounted oxy-fuel burners.[44]

TABLE 4-10. GENERAL SPECIFICATIONS OF THE TYPE OF OXY-FUEL BURNER EMPLOYED AT THE ONAHAMA SMELTER[35]

Burner dimensions	
Length	193 cm (76 in.)
Diameter	15.2 cm (6 in.)
Maximum fuel rate[a]	6.6 ℓ/min (1.8 gpm)
Maximum oxygen rate	20 Nm^3/min (707 cfm)
Oxygen pressure	4.8 atm (71 psi)
Type of cooling system	Water jacket

[a]Fuel type: Bunker C oil.

TABLE 4-11. TYPICAL REVERBERATORY FURNACE OPERATING DATA BEFORE AND AFTER THE USE OF OXY-FUEL BURNERS AT THE ONAHAMA SMELTER[33]

Parameter	Time period	
Parameter	December 1970 (Without oxy-fuel burners)	January 1972 (With 2 oxy-fuel burners)
Concentrate smelted	22,470 Mg	27,142 Mg
Silicious flux smelted	2,966 Mg	3,663 Mg
Limestone smelted	1,868 Mg	1,970 Mg
Reverts smelted	518 Mg	707 Mg
Total solid charge	27,822 Mg	33,482 Mg
Fuel oil consumed	$4,723 \times 10^3 \ell$	$4,870 \times 10^3 \ell$
Oxygen consumed	--	667,058 Nm^3
Matte produced	18,465 Mg	22,843 Mg
Matte grade	34.5 percent Cu	34.4 percent Cu
Slag produced	18,546 Mg	23,530 Mg
Slag copper content	0.46 percent	0.47 percent

Fluxed nickel concentrate feed containing 22 percent sulfur, 8.7 percent nickel, 2.5 percent copper, and 30.1 percent iron is first roasted in Herreshoff multihearth roasters. Conveyors then deliver calcine and crushed nickel converter slag to the reverberatory furnaces. The calcine is sidewall charged using a drag conveyor/fettling pipe feed system. Both furnaces are fired with Bunker C fuel oil and measure 35 m (114 ft) long by 9 m (30 ft) wide. One of the furnaces burns all of the fuel oil in 10 roof-mounted oxy-fuel burners, while the other burns fuel oil in 2 conventional air/fuel end-wall burners and 4 roof-mounted oxy-fuel burners. The grade of matte produced by the Inco furnaces is about 25 to 30 percent Ni + Cu + Co.

Without the use of oxygen, the offgas flow rates from each furnace varied from 1,400 to 1,700 Nm^3/min (50,000 to 60,000 scfm) and contained 1.0 to 1.5 percent SO_2.[48] With full oxy-fuel operation, the furnace offgas flow rate varies from 570 to 850 Nm^3/min (20,000 to 30,000 scfm) and contains 5 to 6 percent SO_2 (measured at the furnace offtake).[48] After passing through the uptake and waste heat boiler, these gases are typically in the 1 to 2 percent SO_2 range. Also, with full oxy-fuel operation, the charging rate increased from 1,270 to 1,830 Mg (1,400 to 2,020 tons) concentrate feed per day, and the fuel requirement per unit of charge was reduced to 45 percent of the operating value in evidence during conventional operation without oxygen. When the overall energy requirement, including oxygen manufacture, is considered, only 67 percent as much energy is used with oxygen enhancement, resulting in a 33-percent savings.

The increase in the SO_2 concentration in the reverberatory furnace offgases was attributed to the following:[48]

- A 50-percent reduction in the offgas volumetric flow rate as a result of eliminating the nitrogen present when air was used.
- A decrease in the amount of air infiltration, because the front burner wall is totally sealed.

Besides increasing the SO_2 concentration in the offgases, oxy-fuel firing has also increased NO_x production as a result of the higher flame temperatures and increased availability of oxygen. Inco has indicated that the NO_x levels from the oxy-fuel-fired furnace are substantially higher than those from conventional furnaces.[50]

Tonnage oxygen has been used in the Copper Cliff smelter since 1945, when Inco began piloting the flash smelting of copper and nickel concentrates.[44] Commercial application of this technology started in 1952. Air blast to the nickel converters has been enriched to 30 percent oxygen by weight since 1958; by the mid-50's, the reverberatory furnace combustion air was being enriched with oxygen, and chalcocite concentrates were smelted in Peirce-Smith converters using an oxygen-enriched blast. Development work on the oxy-fuel burners continued until June 1978. The resulting Inco-designed oxy-fuel burners produce a good flame pattern and acceptable noise levels operating at firing rates of 3.8 kg (8.4 lb) of oil per minute and 7 to 27 kg (15 to 33 lb) of oxygen per minute. Oxygen is supplied to the burner for 70 to 100 percent of stoichiometric requirements. The burners are fed oxygen at 25 psi and oil at 500 psi pressure. The oil is introduced at 116° C (240° F).

For the furnace using only oxy-fuel burners, smelting started at the beginning of October 1979 using 12 oxy-fuel burners and continued for the next 13 months with only minor interruptions. During this time, 652,000 Mg (718,700 tons) of dry solid charge were smelted, and only minor repair delays were experienced. Overall, refractory consumption and fuel efficiency compared favorably with those for conventional operation; roof refractory consumption of about 0.76 kg/Mg of dry solid charge was indicated to have been lower than initially anticipated. The only major problem after startup involved difficulty with slag temperature control. This problem was resolved by removing two of the burners at the skimming end, resulting in the current 10-burner operation.

The higher heat transfer capability and improved heat distribution made possible with oxy-fuel burners has led at Inco to better control

of furnace bottoms and minimized the height of the charge banks. As a result, the matte-holding capacity of the oxy-fuel furnace is now about 400 Mg (440 tons) instead of the 150 Mg (165 tons) during conventional operation. The increase in active furnace volume coupled with the higher heat transfer rates has substantially increased the ability of the furnaces to adapt to changes in feed rates and compositions. Improvement in the ability to recover from furnace slow-downs arising from maintenance or from environmental requirements has also been accomplished.

The two reverberatory furnaces equipped with oxy-fuel burners have over 27 combined months of smelting experience (as of November 1980) and over 1.27 million Mg (1.4 million tons) of charge smelted.[44] Slag compositions, metal losses, and dust carryovers have remained essentially constant over 16 months of operation and are the same for the conventional and oxy-fuel furnaces.

4.4.6.1.4 Use of oxygen at the Phelps Dodge-Morenci smelter.

Phelps Dodge Corporation is examining the oxygen sprinkle smelting approach as an option for its Morenci and Ajo smelters. Development work is being performed at the Morenci smelter in Arizona. Small-scale tests of the oxygen sprinkle smelting scheme have been completed to date. The results of these tests are described in Section 3.4.3.5.3. Oxygen sprinkle smelting is expected to produce SO_2 concentrations in the 20 to 30 percent range.[49]

The oxygen sprinkle process involves closing all unnecessary openings in an existing reverberatory furnace and fitting the furnace with three or more sprinkle burners. These burners are designed to accomplish several important functions within the confines of the existing structure. The two most critical functions of the burners are the following:

- To provide intimate mixing of finely divided concentrates with the oxygen-rich gas phase.
- To sprinkle the feed uniformly over most of the molten bath surface.

Queneau and Schuhmann[47] report that the use of sprinkle burners transforms existing reverberatory furnaces into oxygen flash smelting units. Figure 4-12 shows the configuration of a reverberatory furnace as it would be after conversion to oxy-sprinkle smelting via the installation of three oxy-sprinkle burners.

4.4.6.2 Comparison Between Calcine and Green Charged Oxy-fuel Burner Operations. Location of the burner flame at the base of the charge bank at the calcine charged Inco furnace is a modification of the technique used at the Caletones and Onahama smelters with a green feed.

Green charged furnace operation with oxy-fuel burners has been established to impinge the burner flame directly on the charge banks to (1) protect the furnace wall; (2) produce concentrated heat directly on the smelting material; and (3) increase the available heat by molecular recombination; and of course (4) eliminate the nitrogen heat loss.

The end of the flame from the burner just touches the base of the calcine charge banks in the Inco furnaces. Earlier tests resulted in the flame actually hitting the bottom of the furnace causing an increase in refractory wear as well as dust generation. The optimum flame pattern was adjusted by the amount of oxygen supplied to the burner which is currently 90 percent of stoichiometric. The additional oxygen required enters through leaks in the sidewall as a result the negative pressure within the furnace.

While charge banks are established in the Inco furnace, the angle of repose is considerably lower than with green charge. This still allows some protection of the sidewalls by the charge banks. However, Inco has indicated that at times the charge banks have disappeared completely. The operator must maintain proper feed distribution along the full length of the furnace to prevent localized wall heating and severe refractory erosion, as this furnace does not employ sidewall cooling.

Localized heating trends at Inco are monitored with 12 thermocouples inserted to within about 23 cm (9 in.) of the hot face and about 45 cm (18 in.) above the slag line. In addition, Inco has a novel sidewall

construction arrangement wherein castable refractory is installed in small sections in metal cans to allow easy and rapid replacement. Replacement of the entire sidewall in the upper section can be accomplished in 24 to 48 hours and has been done at 6-month intervals. This technique has been used with conventional smelting as well as with oxy-fuel smelting.

4.4.6.3 Effect of Oxygen Enhancement on Matte Grade. The use of tonnage oxygen in reverberatory furnaces leads to higher oxygen concentrations within the furnace and increased flame temperatures. These effects prompt an examination of the effect of oxygen usage on desulfurization within the furnace and hence on the matte grade.

Furnace matte grades were examined at the Caletones smelter concurrent with the increase in oxygen usage in the green-charged No. 3 furnace.[41] This furnace was started up in April 1974 and retrofitted with two oxy-fuel burners by August 1974. A typical matte grade for the year 1974 was determined to be 53.6 percent Cu. This value is assumed to apply to operation with 2 oxy-fuel burners. Oxygen usage was increased during 1975, with a maximum of seven oxy-fuel burners in use by August. The typical matte grade for 1975, which is taken to apply to operation with seven oxy-fuel burners, was reported at 55.6 percent copper. Oxygen usage was further increased in 1976, with a maximum of 12 oxy-fuel burners in use by June. The typical matte grade for 1976 (assumed to pertain to operation with 12 oxy-fuel burners) was determined to be 48.7 percent, a decrease from the 1974 and 1975 values. Typical charge analyses reported for the period 1974 to 1976 showed little variation in copper contents, which ranged from 38.5 to 39.7 percent.

Onahama Smelting and Refining Company examined the effect of oxy-fuel burner operation on desulfurization in both pilot tests and full-scale operations. The pilot tests were made with a single oxy-fuel burner. The results of the tests showed that the oxidation of sulfur and the matte grade are comparable, under appropriate conditions, to those in a conventional green-charged operation.[33] Data collected from full-scale operations support the pilot test conclusions. Typical

operating data (see Table 4-11) indicate a matte grade of 34.5 percent during conventional operation and a value of 34.4 percent with 2 oxy-fuel burners.[33]

Inco has reported that the use of full oxy-fuel firing in its calcine-charged nickel reverberatory furnace led to essentially no changes in matte grade.[51] Furthermore, no changes were made in the degree of roast of the feed.[51] The implication is that essentially the same degree of sulfur elimination (per unit of feed) occurred in the furnace during conventional operation and full oxy-fuel firing.

Beals et al.[40] of Kennecott investigated changes in matte grade occurring with roof oxygen lancing in pilot plant tests. Significant increases in matte grade were noted with this technique, because the oxygen was blown directly into the bath and oxidized a portion of the sulfur in the matte. Matte grades of 41.8 to 48.8 resulted with lance operation, as compared to a value of 38.0 for conventional furnace operation.

Queneau and Schumaun,[47] developers of oxygen sprinkle smelting, have made projections (based on theoretical calculations) of matte grade resulting with this technology. The calculations were performed for a feed yielding a matte grade of 35 percent Cu during conventional green-charged furnace operation. The projections indicate that substantial increases in matte grade may result, as the process operates autogenously at matte grades of between 60 and 65 percent copper. It should be noted, however, that increases in matte grade of this magnitude would not occur if additional heat is provided via the combustion of ground coal mixed with the feed.

In conclusion, it is noted that extensive tests of oxy-fuel firing indicate essentially no changes in matte grade. It is expected that no changes in matte grade would occur with oxygen enrichment and oxygen undershooting because these schemes are less severe in terms of oxygen usage and flame temperature than oxy-fuel firing.

Pilot-plant tests of roof oxygen lancing indicate that this technique leads to increases in matte grade of from 4 to 10 percentage points.

Oxygen sprinkle smelting, which operates on the same principle as a flash furnace, may lead to substantial increases in matte grade because sulfur and iron in the concentrates are consumed to provide all or a significant portion of the heat necessary for smelting.

4.4.6.4 Refractory Wear with Oxygen Usage In Reverberatory Furnaces. A possible constraint on the use of oxygen in reverberatory smelting furnaces is the increased potential for excessive refractory wear. To some extent, the method of oxygen introduction to the furnace dictates the amount of increase in the roof and side wall temperatures. For example, when oxygen-fuel burners are used, they can release the heat close to the charge, and the roof temperature is not significantly increased. Inco experience[44] with the calcine-charged reverberatory furnace indicated that, when the burners were placed in the roof but close to the side wall, deterioration of the wall occurred. When the burners were moved toward the center line of the furnace the refractory deterioration was better controlled.

When undershooting the flames with oxygen, the hottest zone of the flame is at the bottom next to the bath.[34] Preliminary investigations by Saddington et al.[34] indicate that refractory cost per unit of output in a reverberatory furnace should not increase when oxygen is introduced by undershooting. Figure 4-15 shows the roof temperature variation along the length of two different furnaces at Inco with and without oxygen undershooting. These furnaces have the same dimensions and (without oxygen enhancement) the same capacity.[34] The maximum temperature at the furnace roof did not increase significantly with oxygen undershooting. However, the temperatures were higher along the entire length of the furnace.

The recent work with oxy-fuel burners at Inco[44] indicates that overall refractory consumption compared favorably with conventional operation. The roof refractory consumption with oxy-fuel firing was about 0.76 kg/Mg DSC (dry solid charge) (1.52 lb/ton DSC). Operation of the furnaces with oxy-fuel firing has required an increased operator's awareness of proper feed distribution along the full length of the

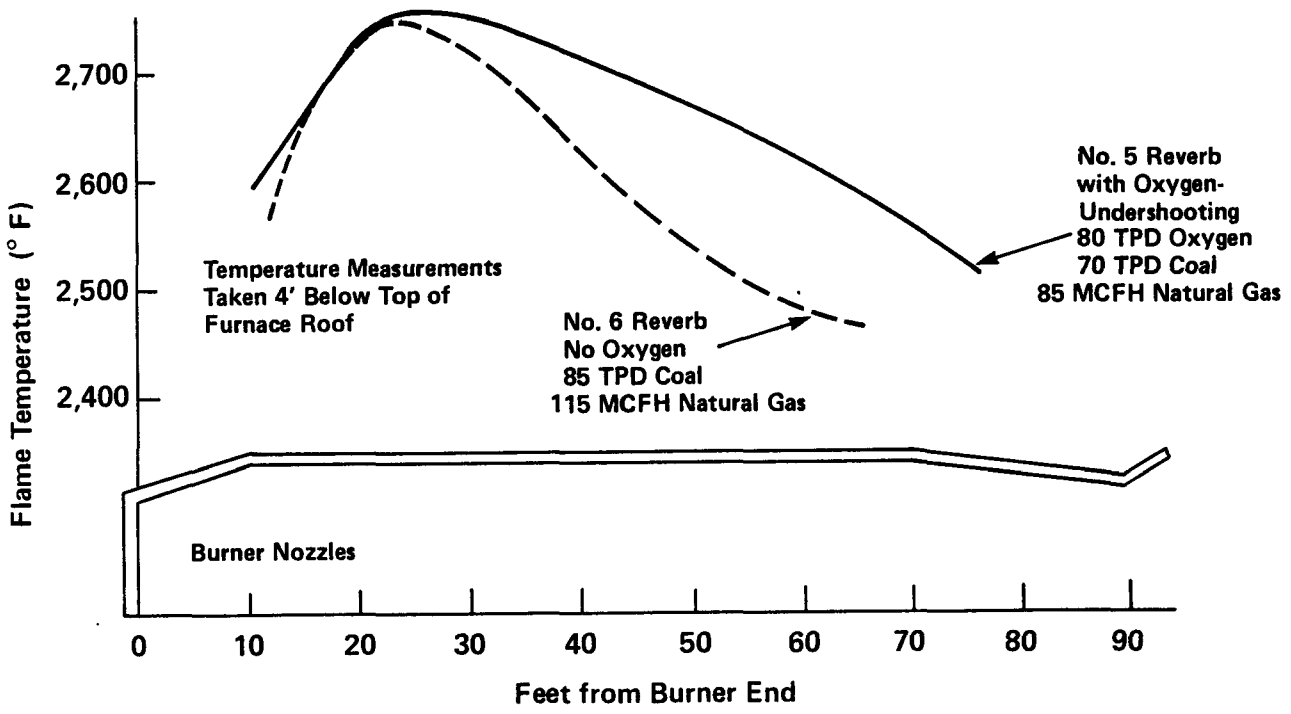

Figure 4-15. Reverberatory furnace temperatures in the vicinity of the furnace roofs with and without oxygen-undershooting at Inco smelter.

furnace. Improper fettling can easily lead to localized wall heating and severe refractory erosion. Localized heating trends are monitored for this reason.

Kupryakov et al.[38] indicated that during a development period at the smelter, where operating conditions varied markedly with various concentrations of oxygen, the average wear of the furnace roof reached a rate of 0.2 mm/24 h (0.008 in./24h). Taking into account the accuracy of measurement and the frequent changes in the operating conditions within the furnace, the wear of the furnace roof during reverberatory furnace operation with an oxygen-enriched blast did not differ markedly from wear when operating with conventional air blast.

Itakura et al.[35] reported that using oxygen-fuel burners in a reverberatory furnace at the Onahama smelter did not increase the lining wear. They postulated that this probably was due to the heat being released close to the charge rather than the lining of the furnace.

Wrampe and Nollman[39] reported during their work on oxygen enrichment at reverberatory furnaces at various U.S. smelters that the overall refractory temperatures increased by approximately 0.28° C (0.5° F) per 28.0 Nm^3/min (1,000 scfm) of oxygen. During their test, excessive roof temperatures did not become a problem until production increases exceeded 50 percent.

Caletones smelter experience[42] indicated that it was necessary to use a bottom ventilation system. Details of this system were not provided. Overall, refractory consumption on a per-unit-of-feed basis was reported to be no more than during conventional operation.[42]

It is concluded that with proper implementation, oxygen enhancement technology would probably not lead to increases in refractory consumption on a per-unit-of-feed basis. Furthermore, based on the extensive use of oxygen enhancement techniques by the industry worldwide, refractory wear considerations are not expected to hinder or limit the adoption of oxygen enhancement techniques by the domestic industry.

4.4.7 Summary of Operating Modifications Useful for Increasing Offgas SO_2 Concentrations

Operating modifications that lead to increases in the SO_2 concentration from reverberatory furnaces include (1) elimination of converter slag return, (2) minimizing infiltration, (3) preheating combustion air, (4) operation at a lower air-to-fuel ratio, and (5) using oxygen enhancement techniques. Extensive data are generally lacking with regard to industry experience using the first four techniques to increase SO_2 concentrations. Based on the available data and engineering judgment, each of these techniques appear useful for increasing SO_2 concentrations on the order of up to a few tenths of a percentage point. Because inadequate data exist and because gains in SO_2 strength achievable generally appear relatively small, the first four techniques mentioned are not considered as possible control strategies in subsequent analyses.

In contrast to the first four techniques, oxygen enhancement techniques have been used extensively by the copper industry worldwide and can lead to substantial increases in SO_2 concentration. Other benefits, such as increased furnace throughput and decreased energy consumption, also result. Hence, these techniques are considered as possible control schemes in subsequent analyses.

A summary of experience involving the use of oxygen in reverberatory furnaces is presented in Table 4-12. The largest reported increases in SO_2 concentration and productivity (in full-scale demonstrations) have resulted from the use of 10 to 12 oxygen-fuel burners that combust the fuel with industrial grade (97 percent pure) oxygen. Increases in SO_2 concentration by a factor of 4 to 5 are noted. Oxy-fuel burners can be adapted to both green-charged furnaces, and to calcine-charged furnaces employing sidewall charging.* The use of full oxy-fuel

---

*Based on the discussion in Section 3.4.3.5.4, there appears to be no technical reason why roof-mounted oxy-fuel burners could not be used on reverberatory furnaces charged with Wagstaff guns. However, some of the data indicate possible engineering and production problems that may preclude such usage under some conditions. Consequently, for the purposes of this analysis, the use of oxy-fuel firing on Wagstaff-charged furnaces is not considered fully demonstrated.

TABLE 4-12. SUMMARY OF EXPERIENCE INVOLVING THE USE OF OXYGEN IN REVERBERATORY SMELTING FURNACES

Type of technology applied	Smelter	Nature of application	Reported increase in production	Reported SO_2 concentrations[a]		SO measurement location	Reference
				Without O_2 enhancement	With O_2 enhancement		
Oxy-fuel burners (2 burners)	Onahama (green charge)	Full-scale demonstration	~ 21 percent	1.5 percent	--[b]	--[c]	27, 33, 35
Full oxy-fuel firing (12 burners)	Caletones (green charge)	Full-scale demonstration	~ 122 percent	--	5.7 to 5.8 percent[d] (dry basis)	--[e]	41, 42
Full oxy-fuel firing (10 burners)	Inco Copper Cliff (Ni calcine charge)	Full-scale demonstration	~ 45 percent	1.0 to 1.5 percent --	5 to 6 percent 1 to 2 percent	Furnace offtake Downstream of waste-heat boiler	44, 48
Oxygen-enriched primary combustion air (25 percent O_2)	Almalyk (green charge)	Full-scale demonstration	22 percent	3.4 percent	5.2 percent	Furnace outlet	38
Undershooting the air-fuel flame with pure oxygen or oxygen-enriched air	Inco Copper Cliff (Ni calcine charge)	Full-scale tests	Up to 36 percent	--	--	--	34
Undershooting the air/fuel flame with oxygen	Rokana (green charge)	Full-scale demonstration	18 percent	--[f]	--[f]	--	34
Oxygen lancing of the furnace bath	Kennecott Copper Corporation (green charge)	Pilot-scale tests	340 percent	1.9 percent	18 percent	Furnace uptake	40
Oxygen-sprinkle smelting	Phelps Dodge-Morenci (green charge)	Small-scale tests	100 percent	--	20 to 30 percent	--	49

[a]Where possible, SO_2 concentrations are characterized as to a wet or dry basis of measurement. Values not explicitly categorized are assumed to be on a dry basis.

[b]Reported increase in SO_2 concentration was 0.3 percent per burner, or 0.6 percent overall. This implies a final gas-stream concentration of 2.1 percent SO_2.

[c]Not reported explicitly, but was apparently after gas cleaning.

[d]SO_2 concentrations of 7.3 percent, dry basis, were recorded for a 10-burner configuration smelting a different type feed.

[e]Not reported, but Caletones indicated that the offgas is suitable for acid plant control.

[f]Actual data not reported; however, a theoretical model developed at Rokana predicts 1.1 percent SO_2 (dry basis) in the furnace flue gases without oxygen enhancement, and 2.0 percent SO_2 with 30 percent oxygen.

firing has been reported to produce substantially increased levels of NO_x in the furnace offgases but produces essentially no change in the furnace matte grade.

The use of the oxygen enrichment and oxygen undershooting schemes leads to smaller increases in SO_2 concentration as compared to full oxy-fuel firing because less oxygen is used. Gains of a factor of 1.5 to 2.0 in SO_2 concentration have been achieved. These two schemes can be used on both green- and calcine-charged furnaces, irrespective of the means of charging. It is expected that no changes in matte grade would occur with oxygen enrichment and oxygen undershooting, because these schemes are less extreme in terms of oxygen usage and flame temperature than oxy-fuel firing.

Results from a pilot-plant study with roof oxygen lancing indicate that SO_2 concentrations of 18 percent can be achieved. This value represents roughly a 10-fold increase in SO_2 concentration. This technique has been observed to increase significantly the furnace matte grade. The increase in matte grade (i.e., desulfurization) accounts in part for the high SO_2 concentration.

The oxygen-sprinkle smelting scheme is expected to produce the highest SO_2 concentration of all of the oxygen enhancement techniques--20 to 30 percent. These values represent a 15 to 20 fold increase in concentration. Such increases are expected because oxygen sprinkle smelting operates on the same principle as a flash furnace. Consequently, substantial increases in matte grade may result with this technique.

A review of literature pertaining to the well-established oxygen enhancement techniques indicates that, with proper implementation, refractory consumption on a per-unit-of-feed basis would not likely increase. Furthermore, based on the extensive use of oxygen enhancement techniques worldwide, refractory wear considerations are not expected to hinder or limit the adoption of these techniques by the domestic industry.

4.5 GAS BLENDING

4.5.1 Converter Scheduling as a Means of Facilitating Gas Blending

The cyclic nature of converter operations must be considered in the evaluation of any gas blending scheme involving converter offgases. Because copper converting is a batch process, the total converter offgas flow and associated composition will vary greatly over time unless converter scheduling is adopted to ensure a continuous flow of SO_2 bearing offgas with as high an SO_2 concentration as possible. Thus, when considering gas blending as a means by which to facilitate the control of weak SO_2 streams as well as the autothermal operation of metallurgical sulfuric acid plants, the need for converter scheduling becomes quite evident.

Appendix J presents the converter scheduling analysis that was used to determine acid plant feed-stream flow and composition profiles under various gas blending scenarios. The schedule is based on five converter cycles daily using three converters.

4.5.2 Weak-Stream Blending as Applied to a New Smelter that Processes High-Impurity Ore Concentrates

A smelter of this type would have the multihearth roaster-reverberatory furnace-converter (MHR-RV-CV) configuration. Gas stream blending as applied to this scenario might involve any of the following cases:

- Case 1: Blending a portion of the weak stream with the strong streams produced by the roasters and converters with subsequent treatment in a dual-stage absorption sulfuric acid plant.

- Case 2: Blending the entire weak stream with the strong streams produced by the roasters and converters, with subsequent treatment in a dual-stage absorption sulfuric acid plant.

- Case 3: Implementing oxygen enrichment of the primary combustion air and blending the entire weak stream with the roaster and converter strong streams, with subsequent treatment in a dual-stage absorption sulfuric acid plant.

- Case 4: Implementing oxy-fuel burners and blending the entire weak stream with the roaster and converter strong streams, with subsequent treatment in a dual-storage absorption sulfuric acid plant.

- Case 5: Treating the entire weak stream in a limestone FGD, while multihearth roaster and converter are blended for processing in a dual-stage absorption sulfuric acid plant.

- Case 6: Treating the entire weak stream in a Cominco NH_3 FGD, with subsequent blending of the strong SO_2 stream from the FGD, the roaster offgases, and the converter offgases for processing in a dual-stage absorption sulfuric acid plant.

- Case 7: Same as Case 6, except a MAGOX FGD is used.

Case 1 (partial weak stream blending) is considered at a level that would ensure autothermal acid plant operation at 3.5 percent SO_2) at all times during which the converters are active. Thus, the acid plant feed stream will not exhibit SO_2 concentrations below 3.5 percent as long as there was some converter activity. However, at times when there is no converter activity, supplemental heat will have to be provided by the acid plant preheater since the SO_2 concentration in the acid plant feed stream will be below the autothermal limit of 3.5 percent.

Cases 2 through 7 involve controlling the entire weak stream via various blending schemes. Each scheme must be assessed in light of the converter schedule presented in Appendix J in order to determine its technical implications in terms of providing an acid plant feed stream. Acid plant preheater operation will be required, however, during any periods when the acid plant feed stream fails to exhibit an SO_2 concentration in excess of 3.5 percent.

4.5.3 Partial Weak-Stream Blending as Applied to Existing Smelters

Existing facilities that undergo physical or operational changes to achieve greater production capacity would not become subject to new source performance standard (NSPS) requirements provided that postchange or postexpansion emission levels at an existing facility do not exceed preexpansion emission levels. For expanded reverberatory smelting furnaces that produce a weak SO_2 offgas stream, one approach available to maintain post-expansion reverberatory furnace SO_2 emissions at preexpansion levels is partial weak-stream blending. Partial weak-stream blending would consist of blending a sufficient portion of the post-

expansion weak SO_2 stream with the strong SO_2 streams produced by the roasters and/or converters, as well as the subsequent treatment of the resultant blended stream in a sulfuric acid plant. Depending upon the scale of the expansion, the upgrading of existing acid plant capacity or the installation of new acid plant capacity may be required. Partial weak stream blending as applied to expanded reverberatory furnaces might involve any of the following cases:

- Case 1: Expansion at the reverberatory furnace (via adoption of oxygen enrichment) for a smelter that processes a calcine charge produced by multihearth roasters. A sufficient portion of the reverberatory furnace offgas stream is blended with the strong streams produced by the roasters and converters, with subsequent treatment in a single-stage absorption sulfuric acid plant.

- Case 2: Expansion at the reverberatory furnace (via adoption of oxygen enrichment) for a smelter that processes a calcine charge produced by a fluid bed roaster. A sufficient portion of the reverberatory furnace offgas stream is blended with the strong streams from the fluid bed roaster and converters, with subsequent treatment in a single-stage absorption sulfuric acid plant.

- Case 3: Expansion at the reverberatory furnace (via adoption of oxygen enrichment) for a green-charged smelter. A sufficient portion of the reverberatory furnace offgas stream is blended with the strong stream from the converters, with subsequent treatment in a single-stage absorption sulfuric acid plant.

- Case 4: Same as Case 3, except expansion is accomplished via adoption of oxy-fuel burners, and a dual-stage absorption sulfuric acid plant is used to treat the blended stream.*

As indicated, all of the expansion options that might involve partial weak stream blending involve oxygen enhancement. Since there is some doubt as to the applicability of oxy-fuel burners to calcine-charged reverberatory furnaces, only application to green-charged furnaces is considered. The type of acid plant specified in each case was determined from a survey of domestic primary copper smelter configurations so as

---

*Since a new converter (subject to NSPS) is required under this scenario, a dual-stage absorption acid plant is required.

to ensure that the cases outlined above would be typical of domestic expansions involving oxygen enhancement.

4.6 PARTICULATE MATTER CONTROL FOR REVERBERATORY FURNACES

4.6.1 Important Factors Governing the Specification of a Particulate Control Device for Reverberatory Furnace Offgases

The nature of reverberatory furnace offgases as well as specific considerations involved in the smelting process itself must be carefully considered before a particular class or type of control device can be specified for application to reverberatory furnace offgases. Among the more important considerations are the following:

- The particle size distribution involved
- The operating temperature of the control device and the quantity of volatilized condensible material present in the furnace offgas stream
- The need to reprocess copper bearing dusts.

Reverberatory furnace offgases are known to contain substantial quantities of particulate matter less than 10 μm in diameter at both in-stack and out-of-stack temperatures.[52] Some of the volatile components that condense at out-of-stack temperatures form submicron-sized fumes that are difficult to remove from the gas stream.[53] Consequently, a control device that efficiently removes particles in the submicron range is required. For removal of particles in this size range, high-energy scrubbers such as venturi scrubbers, fabric filters, and dry ESP's provide the most efficient removal. This fact is illustrated by Figure 4-16, a plot of typical collection efficiency versus particle size for several particulate control devices, and Table 4-13, tabular data relating particulate removal efficiency and particle size for particles less than 10 μm in diameter.

The operating temperature of the control device at the point(s) where particulate collection is to be effected is an extremely important consideration as far as the control of particulate emissions from reverberatory furnaces is concerned. Gases generated in a reverberatory furnace exit the furnace at approximately 1,300° C (2,400° F). Generally, the offgases are then passed through waste heat boilers to effect heat

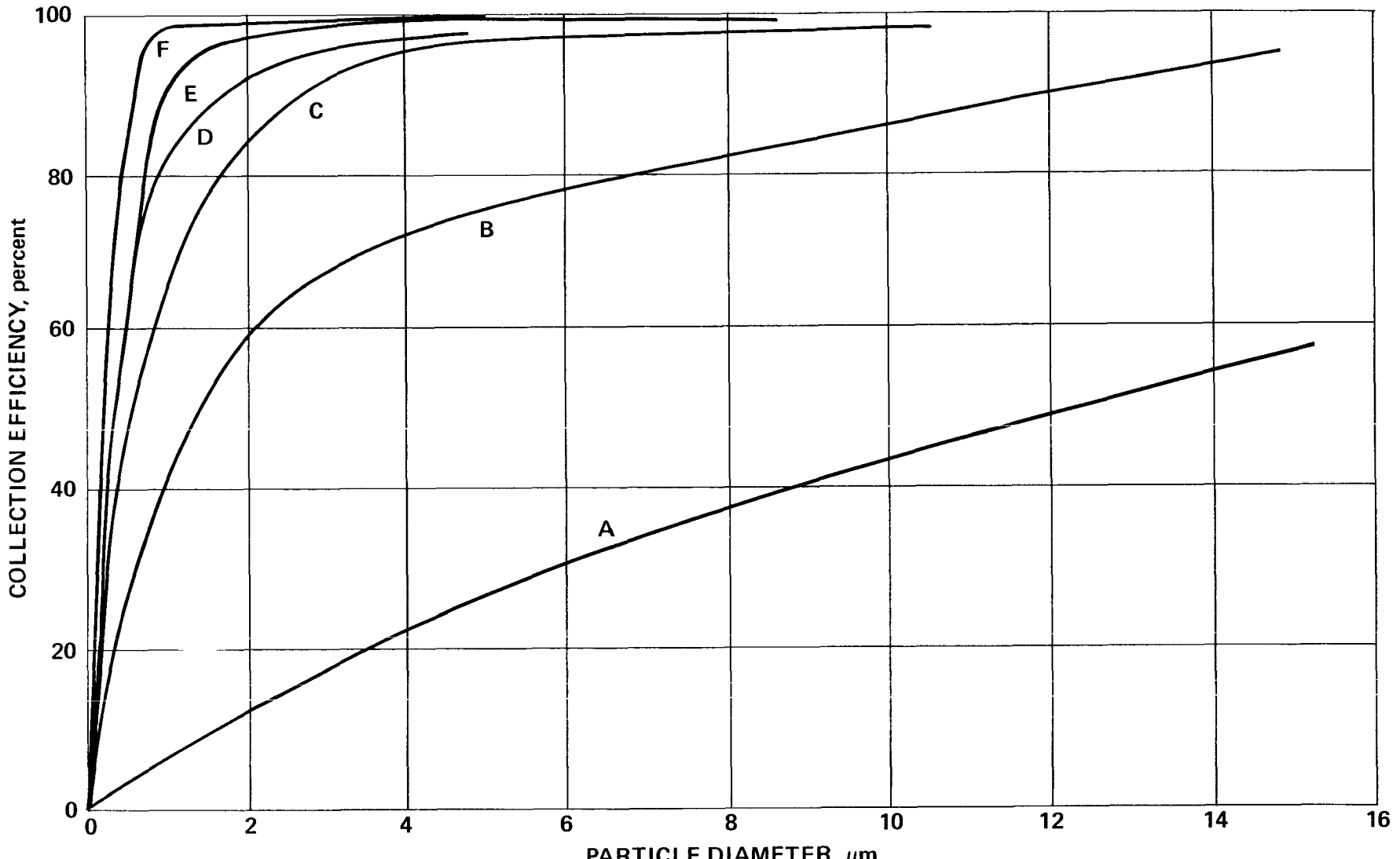

LEGEND:

A = HIGH-THROUGHPUT CYCLONE
B = HIGH-EFFICIENCY CYCLONE
C = SPRAY TOWER
D = DRY ELECTROSTATIC PRECIPITATOR
E = VENTURI SCRUBBER
F = FABRIC FILTER

Figure 4-16. Typical collection efficiency curves for several types of particulate removal devices.

TABLE 4-13. TYPICAL FRACTIONAL COLLECTION EFFICIENCIES OF PARTICULATE CONTROL EQUIPMENT[54]

	Efficiency at given size (percent)		
	5 μm	2 μm	1 μm
Medium-efficiency cyclone	30	15	10
High-efficiency cyclone	75	50	30
Electrostatic precipitator	99	95	85
Fabric filter	99.8	99.5	99
Spray tower	95	85	70
Venturi scrubber	99.7	99	97

recovery, which in turn decreases the gas stream temperature to the 315° to 430° C (600° to 800° F) range. Gas streams in this temperature range would obviously have to be cooled prior to being routed to a venturi scrubber or fabric filter. While ESP's can undoubtedly withstand the temperatures involved, evidence indicates that, due to the presence of condensibles that remain in the vapor phase in the 315° to 430° C (600° to 800° F) temperature range, ESP's that operate at or near this temperature range will not remove the material that will become particulate matter at out-of-stack temperatures. This is due to the fact that ESP's will only remove materials that exist as solids at the temperature of the gas stream. Some species, most notably metallic oxides, may remain in the vapor phase until the gas stream is vented to the atmosphere, at which point they condense and become particulate matter. Thus, control efficiencies may be lowered substantially when the escape of condensible materials downstream of the control device is considered. This fact is supported by in-stack/out-of-stack test data obtained at several primary copper smelters.[55] Thus, due to the presence of condensible substances, the temperature at which the control device operates must be sufficiently low (90° to 110° C [195° to 230° F]).[53] The gas stream must be cooled from the 315° to 430° C (600° F to 800° F) temperature range down to the 90° to 110° C (195° to 230° F) range if collection of the condensible material is to be achieved. This degree of gas cooling may be accomplished by several means, including:[53]

- The use of radiative cooling towers
- The use of spray towers or chambers (evaporative cooling)
- Dilution with ambient air
- The use of scrubbers and/or wet ESP's designed to accomplish gas cooling and particulate removal.

Radiative cooling towers are typically used in lead smelter zinc fuming operations as a cooling step between the waste heat boiler and a baghouse. These towers normally consist of large U-shaped tubes (about 1 m in diameter) that extend as high as 20 to 30 m.

Spray towers that use water are employed in numerous industries to cool and condition gas streams prior to gas cleaning in baghouses and ESP's. Ambient air dilution involves mixing relatively cool ambient air with the process stream to affect cooling. This approach may increase the total volume of gases to be handled by a factor of 2 to 6, depending upon the temperatures of the gases involved. Consequently, this form of gas-stream cooling is not recommended for cooling reverberatory furnace offgases. Both gas cooling and particulate removal could be effected in properly designed wet scrubber and/or wet ESP systems; however, when a wet system for particulate removal is considered, the difficulty involved in reclaiming the dusts from the liquid effluent must be assessed.

The quantity of condensible material (feed impurities removed in the furnace) will dictate the configuration of the particulate matter control system. The amount of condensible material in the furnace offgas stream will determine whether or not hot and cold control devices placed in series will be required in order to separate copper-bearing dusts from the condensibles. For instance, with low levels of condensibles in the furnace offgases, it would not be necessary to separate the copper-bearing dusts from the condensibles. Consequently, cooling of the gas stream followed by a cold control device would be adequate. However, for reverberatory furnace processing high-impurity materials, a different situation could exist. The presence of relatively large amounts of condensibles in the furnace offgases may necessitate the use of a hot control device in series with a cold control device. This configuration could be required so that an adequate portion of the condensibles could be purged prior to dust recycle. The possible need to purge a portion of the captured condensibles involves maintaining favorable conditions for impurity elimination in the smelting furnace. The impurity level above which hot-cold control is required could be determined through a rigorous thermodynamic assessment of the smelting process; however, such an analysis is beyond the scope of this work.

The need to reclaim and reprocess the dusts in reverberatory furnace offgases is another important factor that must be considered. Recycling of dusts is generally practiced to recover valuable metals

contained in the dusts. Consequently, particulate control methods that facilitate dust reclaimation are preferable.

While the gas-stream particle size distribution is always an important consideration in the specification of a particulate control device, the control device operating temperature at the point of particulate collection and the need to reprocess recovered dusts are two critical factors that must be considered in as far as potential applications to reverberatory furnace offgases are concerned. The following discussions on venturi scrubbers, fabric filters, and ESP's evaluate each of these alternative technologies with respect to the special considerations involved in the removal of particulate matter from reverberatory furnace offgases.

4.6.2 Venturi Scrubbers

4.6.2.1 General Discussion. Like other wet collectors, venturi scrubbers operate at variable collection efficiencies directly proportional to the amount of energy expended.[4] However, particles in the 0.1 to 20 μm range can be effectively removed with venturi scrubbers.[54]

Venturi scrubbers use a rectangular or circular flow conduit that converges to a narrow throat section and diverges back to its original cross-sectional area. When the gas stream enters the convergent section, its linear velocity begins to increase and eventually reaches a maximum in the throat area. The high-velocity gas stream tends to atomize the liquid (usually water in the case of particulate removal), which is injected into the stream via nozzles in the throat area. The liquid droplets produced serve as targets for inertial impaction of the particles. Thus, good atomization is essential in providing sites for inertial impaction. A typical venturi scrubber is illustrated in Figure 4-17.

The typical water circulation rate to a venturi scrubber varies from 0.3 to 1.6 $\ell/m^3/min$ (2 to 12 gal/10^3 cfm) of gas treated,[54] which is comparable to the water circulation rate required for other wet particulate collectors. However, as compared with other dry and wet collectors, pressure losses in venturi scrubbers can be quite large. Venturi scrubbers are capable of attaining high removal efficiencies

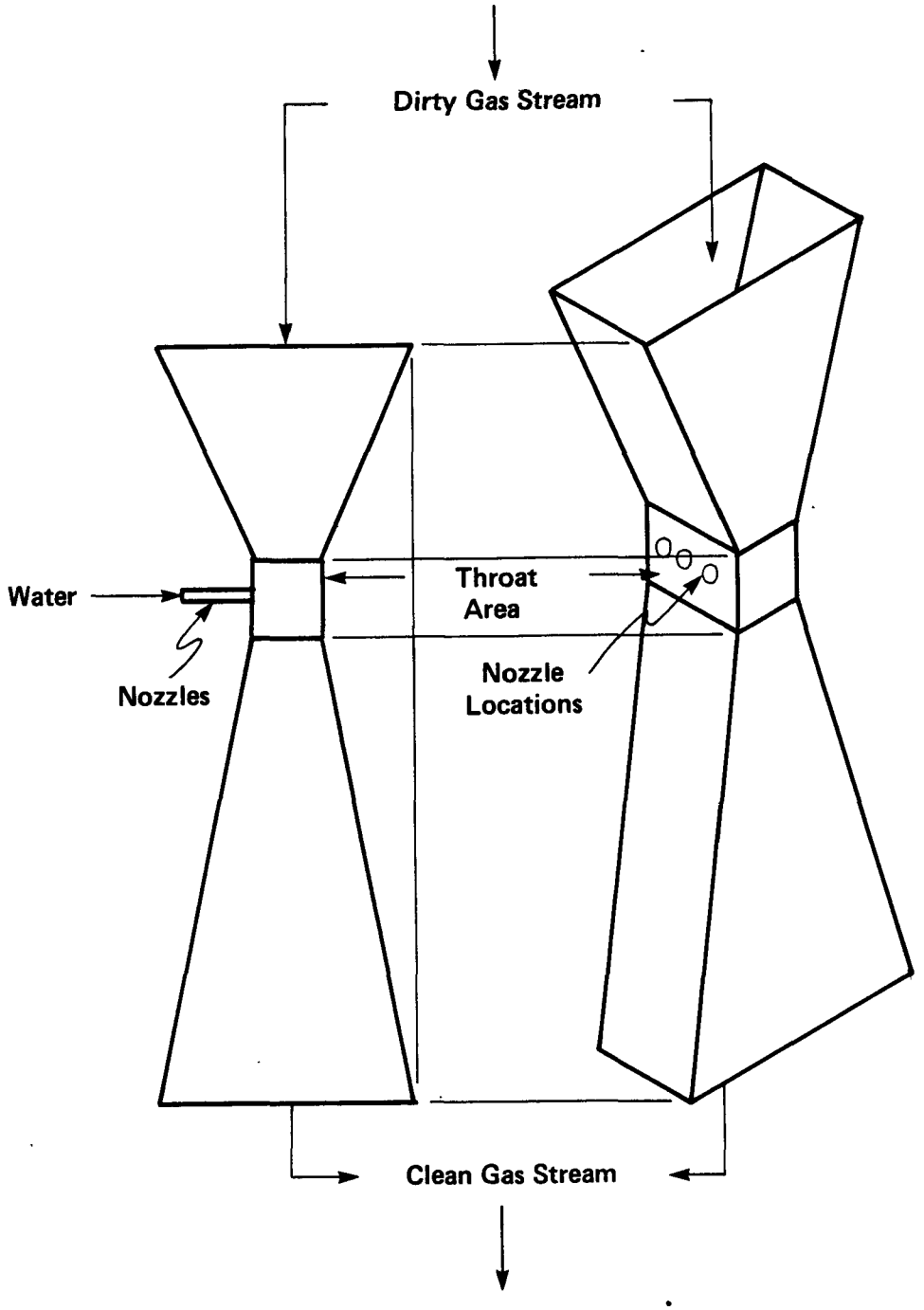

Figure 4-17. Venturi scrubber.

of submicron particles at the expense of high pressure drops. Pressure drops vary from 0.007 to 0.25 atm (3 to 100 in H_2O), depending upon the collection efficiency desired;[54] however, collection efficiencies as high as 99 percent for submicron particles may be attained. Figure 4-18 depicts a typical relationship between fractional collection efficiency[54] and particle size for venturi scrubbers.

4.6.2.2 Application of Venturi Scrubbers to Reverberatory Smelting Furnaces. Properly designed venturi scrubbers could be used to provide gas-stream cooling and efficient particulate matter removal in applications to reverberatory furnace offgases. However, due to the submicron size of some of the solid species involved, high pressure losses will be required to effect efficient removal. Consequently, since energy requirements are proportional to the pressure losses incurred, energy costs may be high.

The treatment of the liquid effluent from venturi scrubbers must also be considered. When dust reclamation is considered, venturi scrubbers, by virtue of being wet collectors, would not prove to be as convenient as dry collectors. This fact, coupled with potentially high energy requirements, is probably the major reason why venturi scrubbers have not found wide-spread application in the smelting industry. Although the Phelps Dodge facility at Playas, New Mexico, does use a venturi scrubber to remove particulate from gases originating in an electric stag cleaning furnace, most smelter applications of venturis have involved the removal of particulate from gas streams bound for sulfuric acid plants. Venturi scrubbers are not currently applied at any domestic smelter for the control of reverberatory furnace particulate matter emissions.

4.6.3 Fabric Filters

4.6.3.1 General Discussion. Fabric filtration is one of the oldest and most commonly used methods of effecting particulate removal from gas streams.[4 54] Fabric filters are typically used for high efficiency (>99 percent) particulate removal.

Filters must be constructed of materials compatible with characteristics of both the carrier gas and the particulate to be collected. A

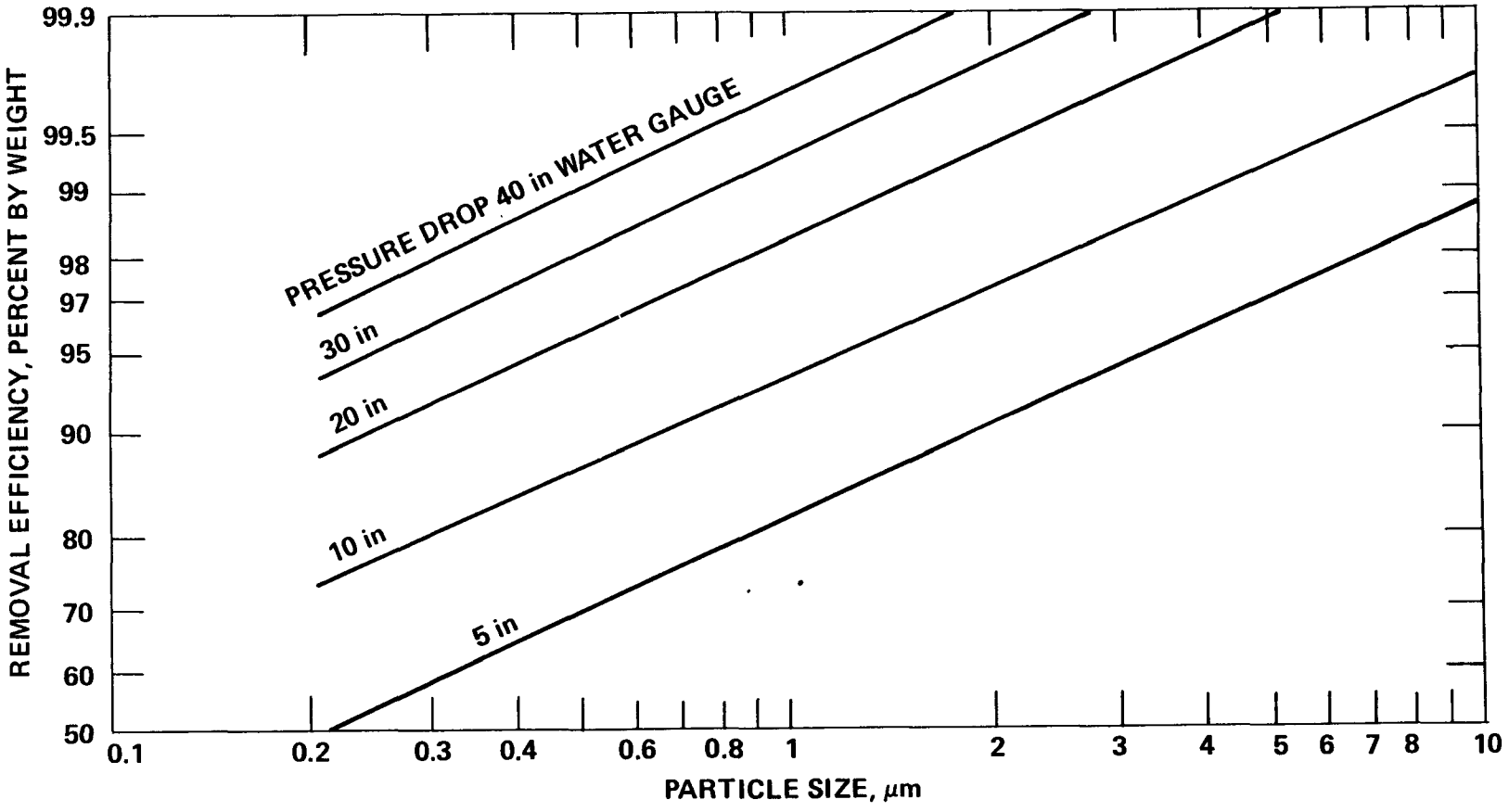

Figure 4-18. Typical relationship between fractional collection efficiency and particle size for venturi scrubbers.[54]

wide range of filtering materials, including woven or felted fabric, is used. Fabrics may be natural or synthetic, depending upon the nature of the gas stream to be treated. Among the materials currently in common use are cotton, nylon, fiberglass, polyesters, and aromatic polyamides.[54]

Particulate matter is removed from the gas stream by impingement on or adherence to the fibers. The filter fibers are normally woven with relatively large open spaces, sometimes 100 μm or larger across. Consequently, the filtering process is not one of simple fabric sieving, as evidenced by the fact that high collection efficiencies have been achieved for dust particles with a diameter of 1 μm or less. Small particles are initially captured and retained on the fiber of the fabric by direct interception, inertial impaction, diffusion, electrostatic attraction, and gravitational settling. Once a mat or cake of dust is accumulated, further collection is accomplished by mat or cake sieving and, to a small extent, by the above mechanisms. Periodically, the accumulated dust is removed, but some residual dust remains and serves as an aid to further filtering.

One of the major operating characteristics of fabric filters is the requirement that they be cleaned frequently to prevent excessive pressure drops. Several means of cleaning the filter bags have been devised, and filters are generally designed with ease of cleaning in mind. The most common methods of cleaning are mechanical vibration or "shaking," pulse jets, and reverse air flow. Figures 4-19, 4-20, and 4-21 present schematics of baghouses with each of the above-mentioned cleaning systems. Cleaning is responsible for a major portion of the filter degradation that occurs over time. Thus, the frequency of cleaning must be determined as a tradeoff between higher operating costs resulting from increased pressure drops and filter replacement costs resulting from more frequent cleaning.

In general, fabric filters must provide a large surface area per volume of gas to be cleaned. The reverse of this ratio is known as the air-to-cloth ratio. Optimum values normally range from 0.5 to 1.5 cm/s (1 to 3 ft/min) for shaker or reverse-air baghouses and from

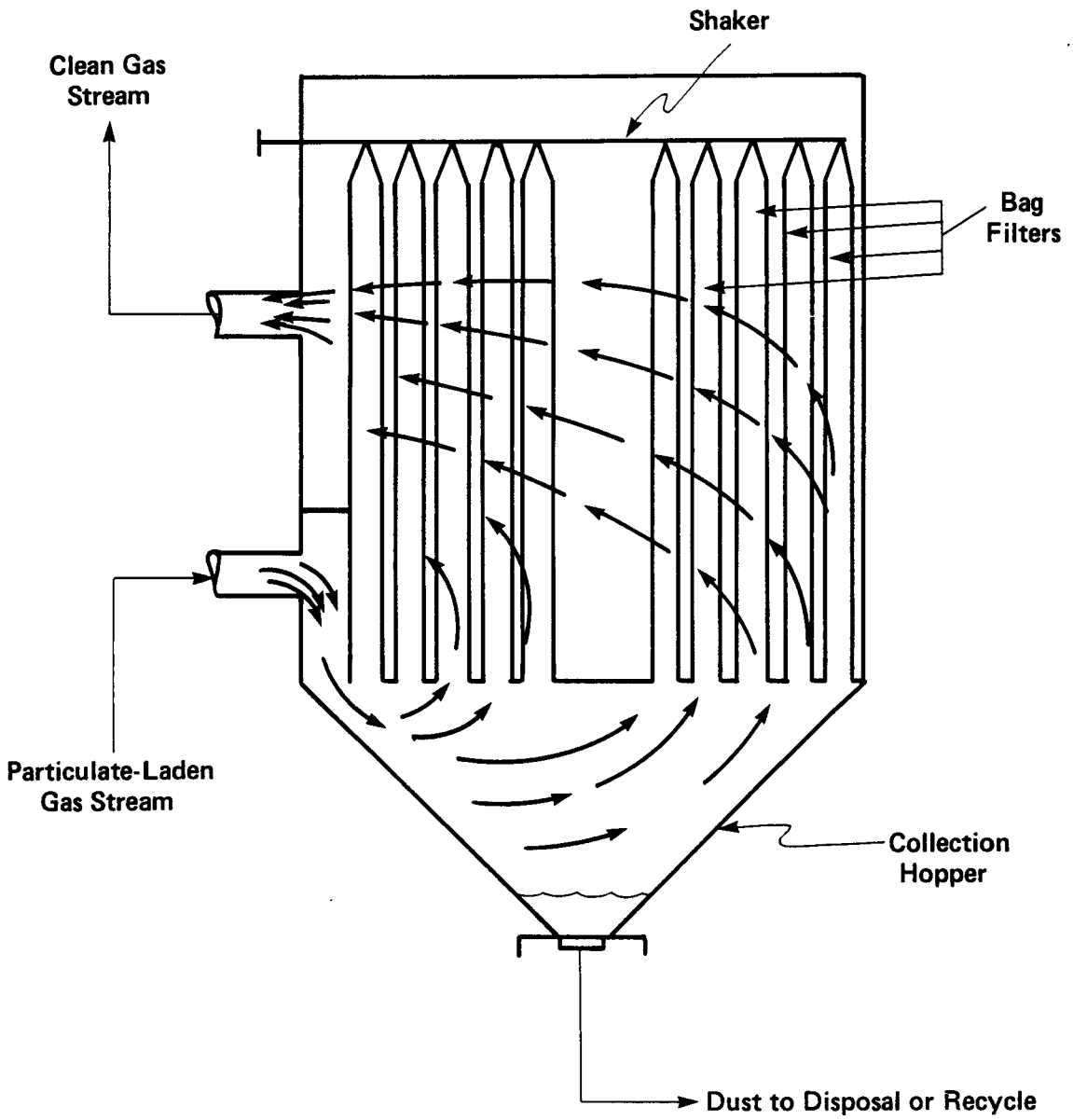

Figure 4-19. Baghouse with mechanical shaking.

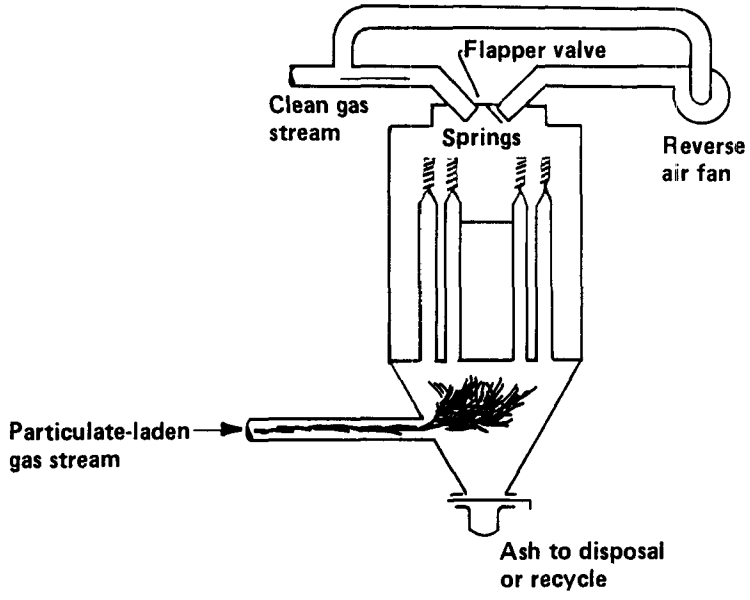

Figure 4-20. Baghouse with reverse flow cleaning.[54]

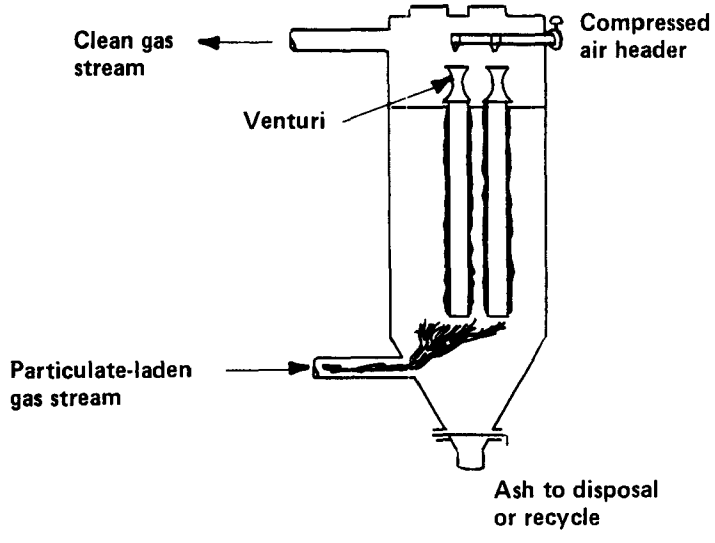

Figure 4-21. Baghouse with cleaning by jet pulse.[54]

about 1.5 to 4.0 cm/s (3 to 8 ft/min) for pulse-jet baghouses. The air-to-cloth ratio required for a given application may in turn require that the baghouse be quite large.

4.6.3.2 Application of Fabric Filters to Reverberatory Smelting Furnaces. With regard to smelters, baghouses are generally chosen as the control device when the SO_3 concentration and chloride content of the effluent gases are low.[4] High SO_3 concentrations are known to produce corrosion and deterioration of both the baghouse structure and the filter fabric. If chlorides are present in the effluent gases, they may tend to produce hygroscopic effects on the fabric filters. Copper, zinc, and lead chloride act as desiccant materials and may produce a sticky material that tends to blind and eventually tear the filter fabric. Reverberatory furnace effluents may contain any of the above-mentioned chemical species. The gas-stream temperature is the primary factor that governs the extent to which these species are formed in the gas stream.[4] These species would likely exist at the lower temperatures (90° to 110° C [195° to 230° F]) required for effective particulate matter removal. Consequently, the design of the baghouse and ancillary equipment will have to account for the increased corrosion potential. Corrosion can be greatly reduced by the use of appropriate construction materials and proper insulation of all flues, baghouse structures and hoppers. While the presence of metal chlorides creates the potential for blinding of the filter media, experience with similar offgas streams from other sources (including an electric smelting furnace) within copper smelters has not produced problems of this type.[53]

It is important to note that, while the gas stream must be cooled to the 90° to 110° C (195° to 230° F) temperature range prior to particulate removal, this degree of cooling will probably not cause the gas stream to reach its dew point. The dew point of reverberatory furnace offgas has been reported to be in the 28° to 46° C (82° to 115° F) range,[56] which is substantially lower than the temperature range required for efficient particulate removal.

Fabric filtration has never been used by the domestic primary copper industry to control particulate matter emissions from reverberatory furnaces. However, fabric filters have been used to control particulate matter emissions from gases that originate in fluid-bed roasters, multihearth roasters, electric furnaces, and converters. EPA has tested a fabric filter used to remove particulate matter from a gas stream composed of offgases from a fluid-bed roaster, an electric furnace, and several converters. These tests were conducted at the Anaconda Smelter in Anaconda, Montana, which subsequently shut down in 1980. Evaporative cooling was used to cool the gases prior to their entry into the baghouse. This was accomplished by routing the gases through a spray chamber. The fabric filter was tested at approximately 100° C (215° F) and processed about 4,670 dscm/min (~164,920 dscf/min) of gas.[55] As shown in Table 4-14, the test results indicated that this device was achieving a particulate removal efficiency of 99.7 percent, which resulted in a mass emission rate of 13.1 kg/h (~29 lb/h) to the atmosphere. (See Appendix C for details.)

There is no doubt that the offgases processed by the aforementioned fabric filter at the Anaconda smelter contained significant quantities of metallic oxides and SO_3, thus creating the potential for the formation of metal chlorides. This was particularly true for the Anaconda smelter since "dirty" concentrates were processed. Thus, when factors that can hinder baghouse performance are considered, the parallel between the previously mentioned offgas stream at Anaconda and the typical reverberatory furnace offgas stream is evident. Consequently, because the application at Anaconda was quite successful, fabric filters are considered technically viable means by which to remove particulate matter from reverberatory furnace offgases. The anticipated overall particulate matter removal efficiency would be the demonstrated efficiency of 99.7 percent.

4.6.4 Electrostatic Precipitators

4.6.4.1 General Discussion. Electrostatic precipitation has played an important role in industrial gas cleaning since the original development work by F. G. Cottrell in 1910. ESP's are capable of

TABLE 4-14. SUMMARY OF PARTICULATE TEST DATA FOR THE SPRAY CHAMBER/BAGHOUSE AT THE ANACONDA SMELTER

Run	Inlet						Outlet						Removal efficiency, percent
	Temperature, °C	(°F)	Grain loading, mg/Nm³	(gr/dscf)	Mass rate, kg/h	(lb/h)	Temperature, °C	(°F)	Grain loading, mg/Nm³	(gr/dscf)	Mass rate, kg/hr	(lb/h)	
1	281	(538)	14,735	(6.44)	4,069	(8,951)	--		50.3	(0.0220)	14.6	(32.1)	99.64
2	288	(550)	13,636	(5.96)	3,751	(8,253)	--		37.1	(0.0162)	10.0	(22.0)	99.73
3	302	(575)	14,048	(6.14)	3,827	(8,419)	--		52.2	(0.0228)	14.6	(32.2)	99.62
Average	290	(554)	14,140	(6.18)	3,882	(8,541)	--		46.5	(0.0203)	13.1	(28.8)	99.7

achieving high collection efficiencies on particles that range from 0.05 to 200 μm in diameter;[54] thus, use of ESP's would be effective in applications where a substantial portion of the particles to be collected are in the submicron range. Generally, ESP's can be shown to be more financially attractive (in comparison to fabric filters) as the dust resistivity approaches the optimum range (10^4 to 10^{10} ohm·cm), or as the volume of gas to be handled increases.

Particulate matter collection by electrostatic precipitation is based upon the fact that particles of one electrical charge experience an attraction to an electrode of opposite polarity. Separation of suspended particulate matter by electrostatic precipitation requires three basic steps:[4]

- Electrical charging of the suspended matter
- Collection of the charged particles on a grounded surface
- Removal of the collected matter to an external receptacle.

A charge may be imparted to the particulate matter prior to gas-stream entry into the ESP by either flame ionization or friction; however, the bulk of the charge is applied by passing the suspended particles through a high-voltage, direct-current corona. The corona is established between an electrode maintained at high voltage and a grounded collecting surface. Particulate matter that passes through the corona is subject to an intense bombardment of negative ions that flow from the high-voltage electrode to the grounded collecting surface. The particles thereby become highly charged within a fraction of a second and migrate toward the grounded collection surface. A typical ESP is illustrated in Figure 4-22.

After the particulate matter deposits on the grounded collecting surfaces, adhesive, cohesive, and primary electrical forces must be sufficiently strong to resist any action or counter-electrical forces that would cause reentrainment of the particulate matter. The particulate matter is dislodged from the collecting surfaces by mechanical means such as vibrating with rappers or flushing with liquids. The collected materials fall to a hopper, from which they can be reclaimed for recycle or disposal.

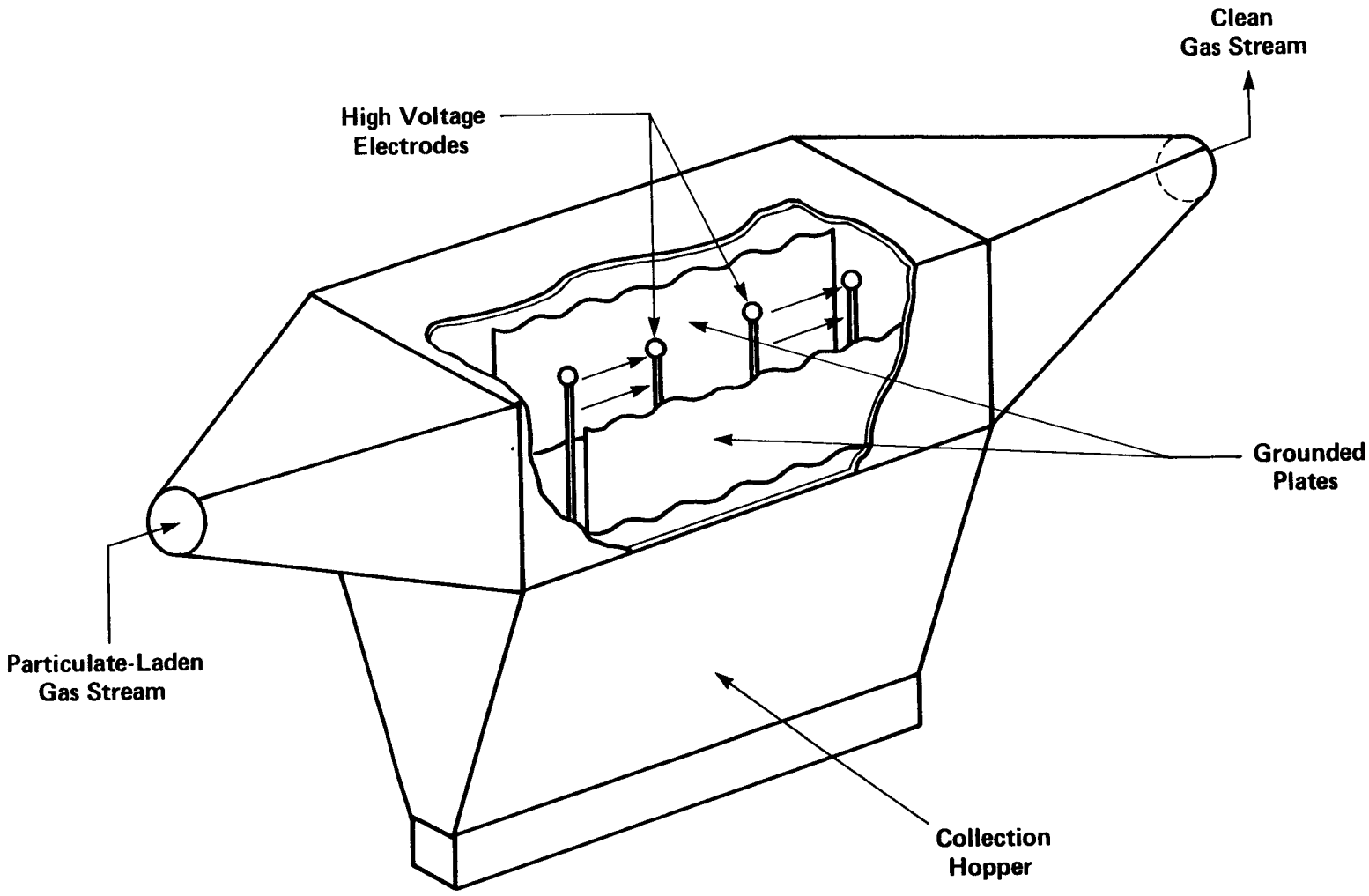

Figure 4-22. Electrostatic precipitator.

Perhaps one of the most important properties of the particulate matter in relation to electrostatic precipitation is the electrical resistivity of the material to be collected. The resistivity of industrial dusts may vary from 10^{-3} to 10^{14} ohm·cm.[54] If the resistivity of the material to be collected is too low ($<10^4$ ohm·cm), collected particles may not retain an electrostatic charge sufficiently high to keep them firmly attached to the collecting surfaces, thus allowing some of the collected material to become reentrained in the gas stream. On the other hand, particulate matter with a resistivity of greater than 10^{10} ohm · cm can cause precipitator collection efficiency to suffer.[54] When dust resistivity is high, a large portion of the total voltage drop between the high-voltage electrodes and the collecting plates actually occurs across the dust layer, which in turn reduces the total corona power available to ionize and to charge the particles in the gas stream. Electrostatic precipitation is most effective in collecting dusts that exhibit resistivities in the range of 10^4 to 10^{10} ohm·cm.

When the resistivity of the dusts to be controlled is not appropriate for electrostatic precipitation, means exist by which to alter the resistivity in such a way that the dusts become amenable to removal by electrostatic precipitation. Resistivity is a strong function of both gas stream temperature and humidity; thus, by appropriate manipulation of these parameters, the resistivity of some dusts can be altered so that efficient removal by electrostatic precipitation becomes feasible.

Another means by which to achieve electrical resistivities in the desired range is the addition of conditioning agents to the gas stream. Currently, SO_3 and NH_3 are the only conditioning agents that are technically and economically feasible in commercial practice.[54] Ammonia or SO_3, when added to a gas stream in small amounts, act as electrolytes when adsorbed on the deposited dust particles. This in turn causes a marked reduction in resistivity.

4.6.4.2 <u>Application of Electrostatic Precipitators to Reverberatory Smelting Furnace Effluents</u>. ESP's have been used by the domestic primary copper industry for several years to control offgases from

reverberatory furnaces as well as offgases from roasters and converters. ESP's have several characteristics that make them particularly attractive for the reclamation of smelter dusts. ESP's are capable of handling very large volumes of gas and can also easily reclaim valuable dusts. The ability of ESP's to exhibit high collection efficiencies on fine particles is also quite attractive, especially where the control of reverberatory furnace offgases is considered. However, as mentioned in Section 4.5.1, ESPs will only remove materials that exist as solids at the gas stream temperature. In-stack/out-of-stack test data presented in Table 4-15 support the fact that ESP removal efficiencies are lowered substantially when the escape of condensible species is considered. For example, in-stack measurements on the reverberatory furance ESP at Phelps Dodge-Ajo showed that, at 315° C (600° F), the ESP was achieving a 96-percent particulate removal efficiency. However, out-of-stack measurements obtained at 120° C (250° F) indicated that this ESP is less than 50 percent efficient because of the vaporized metallic oxides that pass through the ESP and subsequently condense. The data in Table 4-15 indicate that a substantial portion of the emissions generated remain in the vapor phase at the temperature of the gas stream and thus are not removed by the ESP. Thus, the need for control device operation in the 90° to 110° C (195° to 230° F) temperature range is substantiated. ESP operation in this temperature range is feasible, although the potential for certain problems does exist. Some of the compounds that exist in the gas streams in the 90° to 110° C (195° to 230° F) temperature ranges could form a sticky mass that might adhere to ESP plates and thus hinder efficient performance. As noted previously, however, experience with similar smelter offgas streams has not produced this problem. Another problem may occur if the resistivity of the particles involved becomes too high at the lower temperatures involved. Tests have indicated, however, that reverberatory furnace dusts do not exhibit high resistivities at low ESP operating temperatures.[53] Thus, dust resistivity should not preclude dry ESP operation in the 90° to 110° C (195° to 230° F) temperature range.

TABLE 4-15. SUMMARY OF IN-STACK/OUT-OF-STACK PARTICULATE MATTER TEST RESULTS AT REVERBERATORY FURNACE ESP OUTLETS[55]

Smelter/test contractor	No. of test runs	Temperature, °C	In-stack particulate loading,[a] mg/dscm	Out-of-stack particulate loading[b] at 120° C, mg/dscm	Total particulate loading[c] at 120° C, mg/dscm
Magma, San Manuel,[d] AZ/ EPA, NEIC	4	280	230	1,030	1,260
Phelps Dodge,[e] Ajo, AZ/ Radian	3	315	95	2,335	2,430
Phelps Dodge, Ajo, AZ/ Aerotherm	2	290	70[f]	1,730[g]	1,800
Kennecott, Hayden, AZ/ Aerotherm	1	145	30[f]	30[g]	60

[a]Includes nozzle wash and in-stack filter.

[b]Includes probe wash, back half of the in-stack filter holder wash, front half of the out-stack filter holder wash, and the out-stack filter.

[c]Includes in-stack and out-of-stack particulate (does not include impinger catch).

[d]Single-point sample.

[e]Incomplete traversing.

[f]Does not include nozzle wash. Therefore, these results are somewhat lower than the actual loading.

[g]Includes nozzle wash. Therefore, these results are somewhat higher than the actual loading.

While there is no cold ESP that processes reverberatory furnace offgases only, one situation does exist, at the ASARCO-El Paso Smelter, where multihearth roaster and reverberatory furnace offgases are first cooled by evaporative cooling in a spray chamber and then routed to an ESP. EPA has tested this ESP to ascertain overall particulate matter removal efficiency.[57] The test data are presented in Table 4-16. Analysis of the test results yielded an average overall particulate matter removal efficiency of 96.6 percent. The resultant emissions to the atmosphere were approximately 37.2 kg/h (81.9 lb/h).

There is no doubt that the reverberatory furnace offgases at ASARCO's El Paso smelter contain significant quantitates of metallic oxides and SO_3, thus creating the potential for the above-mentioned problems. However, these problems were not encountered. Consequently, cold ESP operation on reverberatory furnace offgases is considered to be technically feasible with an expected overall particulate matter removal efficiency of 96.7 percent.

4.6.5 Conclusions Regarding Particulate Removal from Reverberatory Furnace Offgases

Since a substantial portion of the particles to be removed from reverberatory furnace offgases are in the submicron range,[53] the consideration of control devices must be limited to those which can effectively remove particles in this size range. For this reason, the discussions in Section 4.5 have been limited to high-energy (venturi) scrubbers, fabric filters, and ESP's.

Venturi scrubbers could be used to effect the required gas cooling and particulate removal; however, large pressure drops would be required to remove the smaller particles. Consequently, energy requirements would probably be high. In addition, because copper smelter dusts are generally recycled, the use of venturi scrubbers would necessitate the recovery of the dusts from the liquid effluent. In light of these factors, venturi scrubbers are dismissed from consideration for the control of particulates in reverberatory furnace offgases.

Because the control device must operate in the 90° to 110° C (195° to 230° F) temperature range, fabric filters appear to be quite

TABLE 4-16. SUMMARY OF PARTICULATE TEST DATA FOR THE SPRAY CHAMBER/ROASTER-REVERBERATORY ESP AT THE ASARCO-EL PASO SMELTER

Run	Inlet						Outlet						Removal efficiency, percent
	Temperature, °C (°F)		Grain loading, mg/Nm³	(gr/dscf)	Mass rate, kg/h	(lb/h)	Temperature, °C (°F)		Grain loading, mg/Nm³	(gr/dscf)	Mass rate, kg/hr	(lb/h)	
1	226	(439)	4,530	(1.98)	1,021	(2,247)	104	(220)	111	(0.0486)	40.8	(89.7)	96.0
2	231	(448)	5,651	(2.47)	1,236	(2,719)	104	(220)	85	(0.0372)	33.7	(74.1)	97.3
3	--		--		--		--		--		--		
Average	229	(444)	5,091	(2.23)	1,129	(2,483)	104	(220)	98	(0.0429)	37.2	(81.9)	96.7

feasible for removing particulates from reverberatory furnace offgases. Construction material would have to be judiciously selected, however, to minimize corrosion that might occur due to species that may condense at the low temperatures involved. Nonetheless, cooling to the 90° to 110° C (195° to 230° F) temperature range should not cause the gas stream to reach its reported dew point of 28° to 46° C (82° to 115° F). Significantly, a "cold" fabric filter has indeed been used to control a gas stream composed of gases from a fluid-bed roaster, an electric smelting furnace, and several converters (see Section 4.5.3.2). This device was tested by EPA and exhibited a 99.7-percent overall capture efficiency.[55] Corrosion and blinding of the filters were not identified as extensive problems in this application which occurred at the Anaconda Smelter in Anaconda, Montana. Also, as suggested by the data presented in Figure 4-16 and Table 4-13, fabric filters would provide the greatest collection efficiencies for particles less than 10 μm in diameter.

Cold ESP's are also technically viable means by which to remove particulate from reverberatory furnace offgases. EPA tests indicate that the resistivity of the dusts involved in the 90° to 110° C (195° to 230° F) temperature range is not too high for effective ESP operation. While no test data exist that characterize cold ESP operation on reverberatory furnace offgases alone, inlet and outlet ESP test data are available for a cold ESP used to treat offgases from the multihearth roasters and reverberatory furnaces at the ASARCO-El Paso smelter. Test results based on total particulates indicate that this ESP was operating with a 96.7 overall capture efficiency.[58] The temperature in evidence at the ESP outlet was 104° C (220° F)--well within the range required for the condensation of metallic oxides. Consequently, it would be reasonable to assume that ESP operation on reverberatory furnace gases alone in the 90° to 110° C (195° to 230° F) range can result in a overall efficiency of about 96.7 percent.

4.7 CONTROL OF FUGITIVE EMISSIONS FROM PRIMARY COPPER SMELTERS

4.7.1 General

Fugitive emissions may be characterized as emissions from material transfer operations, process vessel leakage, and primary flue leakage

that escape directly to the atmosphere. Capture of fugitive emissions is effected by either local or general ventilation techniques. Once captured, fugitive emissions may be routed directly to a control device, or they may be combined with primary process offgases prior to treatment in a control device. In many cases, they are simply routed to a stack for dispersion without any type of prior particulate or vapor removal. However, even though captured fugitive emissions may not be subjected to particulate matter or SO_2 removal, high-level dispersion of these emissions will result in lower ambient concentrations of these pollutants at the ground level near the smelter. Consequently, the ambient air quality would be improved even though mass emissions of particulate matter and SO_2 to the atmosphere would remain the same.

Fugitive emissions from some sources may be minimized or eliminated by minor process changes and/or good operating and maintenance practices. In other cases, add-on controls are required. Section 3.3 contains a detailed discussion of fugitive emissions sources within a primary copper smelter.

4.7.2 Local Ventilation

Local ventilation systems consist of localized hoods or enclosures designed to confine and capture fugitive emissions at the source. These systems use induced air currents to divert fugitive emissions into an exhaust duct.

In this discussion, the term "hood" is used in a broad sense to include all suction openings, regardless of shape or physical characteristics. The design of a local exhaust hood involves the specification of its shape and dimensions, its position relative to the emission point, and its rate of air exhaust. In the design of local exhaust hoods, an attempt is made to create a controlled air velocity that will prevent the escape of fugitive emissions from the controlled area to the surrounding atmosphere. The exhause rate at the hood entrance is dependent upon the air velocity required to prevent the escape of emissions. The air velocity that will just overcome the dispersive motion of the contaminant(s), plus a suitable safety factor, is called

the "capture velocity." The capture velocity must be high enough so that particles at the most distant null point will be captured. Emissions are generally released from the source with a considerable velocity; however, momentum is soon lost, which results in a rapid decrease in velocity. The position at which the fume velocity is approximately zero is called the null point. Figure 4-23 illustrates the formation of null points as the fume rises from the emission source. If an adequate velocity toward the hood is provided at the most distant null point from the hood, the majority of the fume will be captured.

Wark and Warner[54] report that a velocity of less than 30 m/min at a null point seldom can be tolerated without a marked loss in capture hood effectiveness. The optimum capture velocity depends upon the following factors:[54]

- The size and shape of the hood
- The position of the hood relative to the emission source
- The nature and quantity of the fume to be captured.

For an exhaust hood to be effective, the exhaust rate across the space between the emission source and the hood must be sufficient to entrain all of the emissions. Proper hood design must incorporate allowances for indoor air currents that could deflect the emissions away from the hood. A capture hood designed to work in a still atmosphere may be completely ineffective in the presence of indoor air currents. In addition, the design should be such that the exhaust rate is as uniform as possible over the entire plane of the hood inlet.[58]

In the case of fugitive emissions from hot sources associated with primary copper smelters, the hood design and the specified ventilation rate must account for the thermal draft that results from heat transfer from the source to the surrounding air. The hood design must accommodate not only the volume of fugitive gases to be collected but also surrounding air set into motion by convective currents. In addition, hoods should be placed as close to the emission source as practical to enhance pollutant recovery.

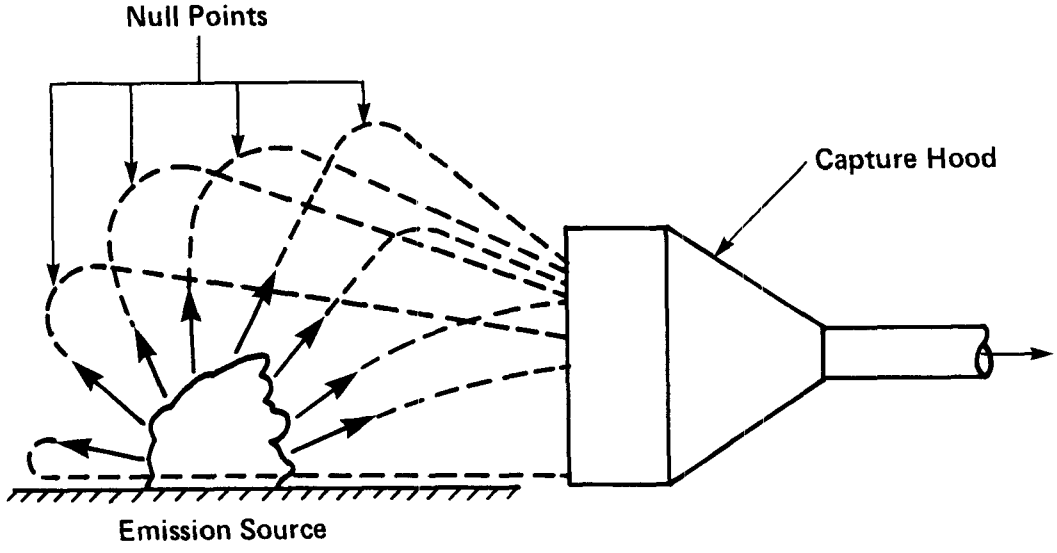

Figure 4-23. Illustration of null point formation.

Air curtains can be used to complement local ventilation systems. A detailed discussion of air curtains is presented in Section 4.7.6.3.

Several fugitive emission sources associated with primary copper smelters can be controlled by local ventilation methods. Among these sources are:[58]

- Calcine discharge and transfer from multihearth roasters
- Matte tapping
- Slag tapping
- Converter operations
- Anode furnace operations.

4.7.3 General Ventilation

General ventilation is normally required when it is not possible or expedient to use local exhaust hoods. Local hoods may handicap the operation, maintenance, or surveillance of a process or a piece of process-related equipment, in which case general ventilation would become the preferred method of fugitive emissions control.

General ventilation has historically taken the form either of natural air changes caused by wind and, possibly, convective air currents or of mechanically assisted air change. Natural air changes throughout a building can occur by either of two mechanisms:

- The force of natural wind currents through windows or other openings in the building
- The force of convective air currents that occur due to temperature gradients that exist between the inside of the building and the surrounding environment.

Mechanical ventilation is induced by motor-driven fans and is used when the emissions cannot be removed by natural ventilation.

Ventilation requirements for buildings are generally defined in terms of the number of air changes required per unit of time. Although essential in determining the ventilation requirements, the air change rate, also referred to as the ventilation rate, is not the only factor that must be considered. The evolution rate of emissions within a

building must also be considered, as must other site-specific characteristics such as heat sources, building configuration (number of spans and the form and shape of the roof), and arrangement of ventilation openings (windows, roof bays, etc.). Proper ventilation entails a delicate balance between mechanical and naturally occurring forces within a structure.

4.7.4 Control of Fugitive Emissions From Roasting Operations

As suggested by the discussion of fugitive emission sources in Section 3.3, calcine discharge and transfer are the only significant sources of fugitive emissions from multihearth roaster operations. Fluid-bed roasters are designed in such a manner that fugitive emissions are virtually eliminated;[58] therefore, this discussion will primarily address the control of fugitive emissions from calcine discharge and transfer operations associated with multihearth roasters.

Four domestic copper smelters currently use multihearth roasters:

- ASARCO-El Paso
- ASARCO-Hayden
- ASARCO-Tacoma
- Phelps Dodge-Douglas.

Calcine produced at these smelters is normally discharged from the bottom of the multihearth roaster into a hopper, which in turn distributes the calcine to a transfer vehicle (larry car) for transportation to the smelting furnace(s). Calcine hoppers are discharged intermittently rather than continuously. More than one hopper may be discharged during the transfer of calcine to the larry cars for transport to the smelting furnace(s). The frequency of discharge for any one hopper may vary from zero to 30 times per hour.[58] Typically, the duration of discharge is approximately 30 to 60 seconds per hopper. Large quantities of dust are generated as a result of material movement and pressure changes within the transfer vehicle. Consequently, local ventilation is needed to control emissions at the transfer point, and the transfer vehicle feed opening must be covered to prevent the escape of emissions during transport.

The design and effectiveness of these systems vary from smelter to smelter. Generally, the captured fugitive emissions are routed to existing process control systems for particulate removal.

Figure 4-24 presents a schematic of the calcine transfer/fugitive emissions control system at ASARCO-Hayden. A similar system is used at ASARCO-Tacoma. A continuous, flat apron strip nearly 0.6 m (2 ft) wide is mounted directly below the row of multihearth roasters at the hopper discharge gate. In the apron below each hopper two ports are connected to a duct 0.5 m (1.5 ft) wide. A matching leaf spring-loaded flat apron is mounted on the larry car. When the larry car is driven beneath the roaster, it is positioned so that the matching apron on the car is directly aligned with the apron on the bottom of the roaster hopper. Consequently, the ports in the hopper apron are perfectly aligned with ports on the larry car apron. One port is used for transferring the calcine to the larry car, while the other two ports are used for ventilation. Each port has its own individual fan* rated at approximately 140 Nm^3/min (5,000 scfm). Emissions captured by this system are routed to the roaster primary offgas flue.

At ASARCO-El Paso, calcine transfer occurs in a long shed. The shed is open at one end for larry car entry, and an exhaust duct is located at the opposite end. The captured emissions are exhausted into the spray chamber system that handles the primary process emissions from the reverberatory smelting furnaces. A visual inspection of this facility indicated that about 50 percent of the visible emissions are captured.[58]

At Phelps Dodge-Douglas, hooding with canvas flaps is provided around the roaster discharge area into which the larry cars are driven. Captured emissions are routed to a baghouse for particulate removal. The average volumetric flow rate at the inlet of the baghouse used to treat these emissions has been measured to be approximately 990 Nm^3/min (35,000 scfm). A visual inspection indicated that about 70 percent of the visible emissions are captured by this system.[58]

---

*Only a single fan is used at ASARCO-Tacoma.

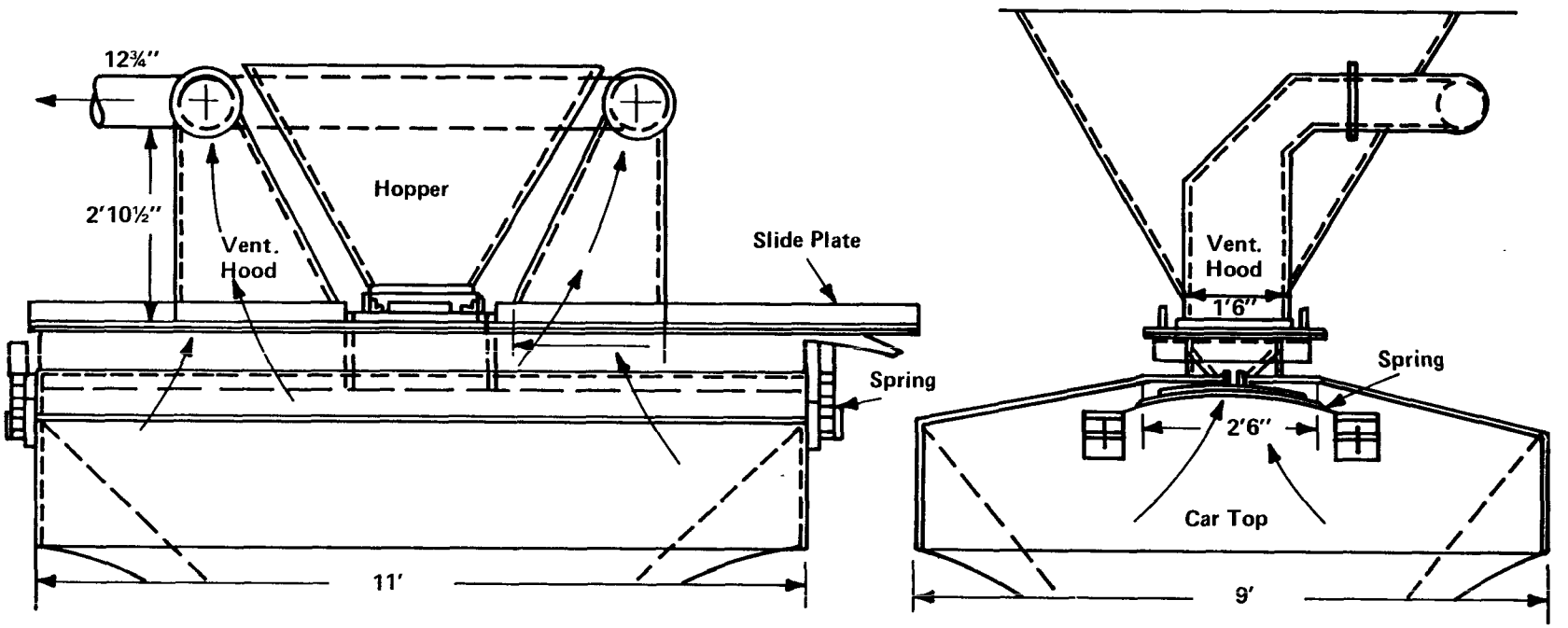

NOTE: Car Top and Hood – 18 Ga. C.R.S.

FRONT ELEV.

SIDE ELEV.

Figure 4-24. Spring-loaded car top and ventilation hood, ASARCO-Hayden.[58]

From an alternative control standpoint, the ASARCO system applied at Tacoma and Hayden seems to be the most viable because it is very effective in controlling visible fugitive emissions. This determination has been made based upon visual observations of the various systems now in use for the control of fugitive emissions from calcine discharge operations.

Although visible emissions from calcine discharge operations are effectively controlled as discussed above, emissions from calcine transfer operations are generally poorly controlled. Visible emissions from moving larry cars at ASARCO-El Paso and ASARCO-Hayden were evident.[59 60] In addition, the odor of SO_2 was easily detected from the larry car emissions observed at the El Paso smelter.[59] Larry car covers should be used while the cars are in transit to minimize fugitive emissions.

4.7.5 Control of Fugitive Emissions From Smelting Furnace Operations

A complete discussion of the fugitive emissions sources associated with various types of smelting furnaces is presented in Section 3.3. From this discussion, it becomes evident that matte tapping and slag skimming operations are the most significant easily controllable sources of fugitive emissions from smelting furnaces. Consequently, this discussion addresses the control of fugitive emissions from tapping and skimming operations only.

4.7.5.1 Control of Fugitive Emissions from Matte Tapping Operations. Matte tapping is the operation by which matte is removed from the smelting furnace for transport to the converters. Matte is removed (tapped) from the furnace through tapping ports, which are generally located on the sides of the furnace. The number and location of the tapping ports will vary from furnace to furnace depending upon the size and type of smelting furnace; however, the tapping procedure is generally the same. Normally, matte is tapped from one port at a time and conveyed through launders into ladles. The ladles vary in volume from 5 to 9 m^3 (175 to 325 ft^3). A single matte tap may last from 9 to 15 minutes, with emissions in evidence from the point at which the matte exits the furnace to the point where it settles into the ladle.

Most smelters employ local exhaust hoods at the points where the matte exits the furnace. In addition, launder covers are used at most facilities. Tap port exhaust hoods may be of any shape as long as they are designed to evacuate as much of the emission area as possible. Hoods of this type are generally affixed to the side of the furnace. Observations indicate that, when operated properly, hoods of this nature are quite effective in capturing fugitive emissions generated in the area of the tapping port. In addition, these hoods are quite effective in capturing heavy emissions that occur during the lancing required to open the ports. A typical hood of this type is illustrated in Figure 4-25.

A schematic of a matte tapping fugitive emissions control system is presented in Figure 4-26. The system illustrated is employed at the ASARCO-Tacoma smelter. The actual matte tap hoods are 1.2 m by 1.2 m (4 ft by 4 ft) in cross section and are located less than 0.9 m (3 ft) above the tapping port.[58] Each matte tap hood is connected to the main fugitive emissions duct as shown. The ducts, which connect each hood to the main fugitive emissions duct, are 0.6 m (2 ft) in diameter; the main duct is 1.2 m (4 ft) in diameter. During a tap, approximately 280 Nm^3/min (10,000 scfm) are exhausted from a given matte tap hood.

Launder covers are usually made of metal and are mounted on the launders in sections to allow manual removal for launder cleaning. A typical section of a launder hood is 1.2 to 1.5 m (4 to 5 ft) long.[58] Launder covers of this type are depicted in Figure 4-27. A great deal of the emissions that are generated by the molten matte as it flows down the launder can be captured by launder covers if the covers are well maintained and in place during tapping operations. Due to the incline of the launder, hot fumes captured by the launder covers will generally rise back to the tapping port area where they are captured by the tap port hood.

An effective type of launder hood has been developed by the Phelps Dodge Corporation and is currently in use at Phelps Dodge's Morenci smelter. This type of hood, as depicted in Figure 4-28, is

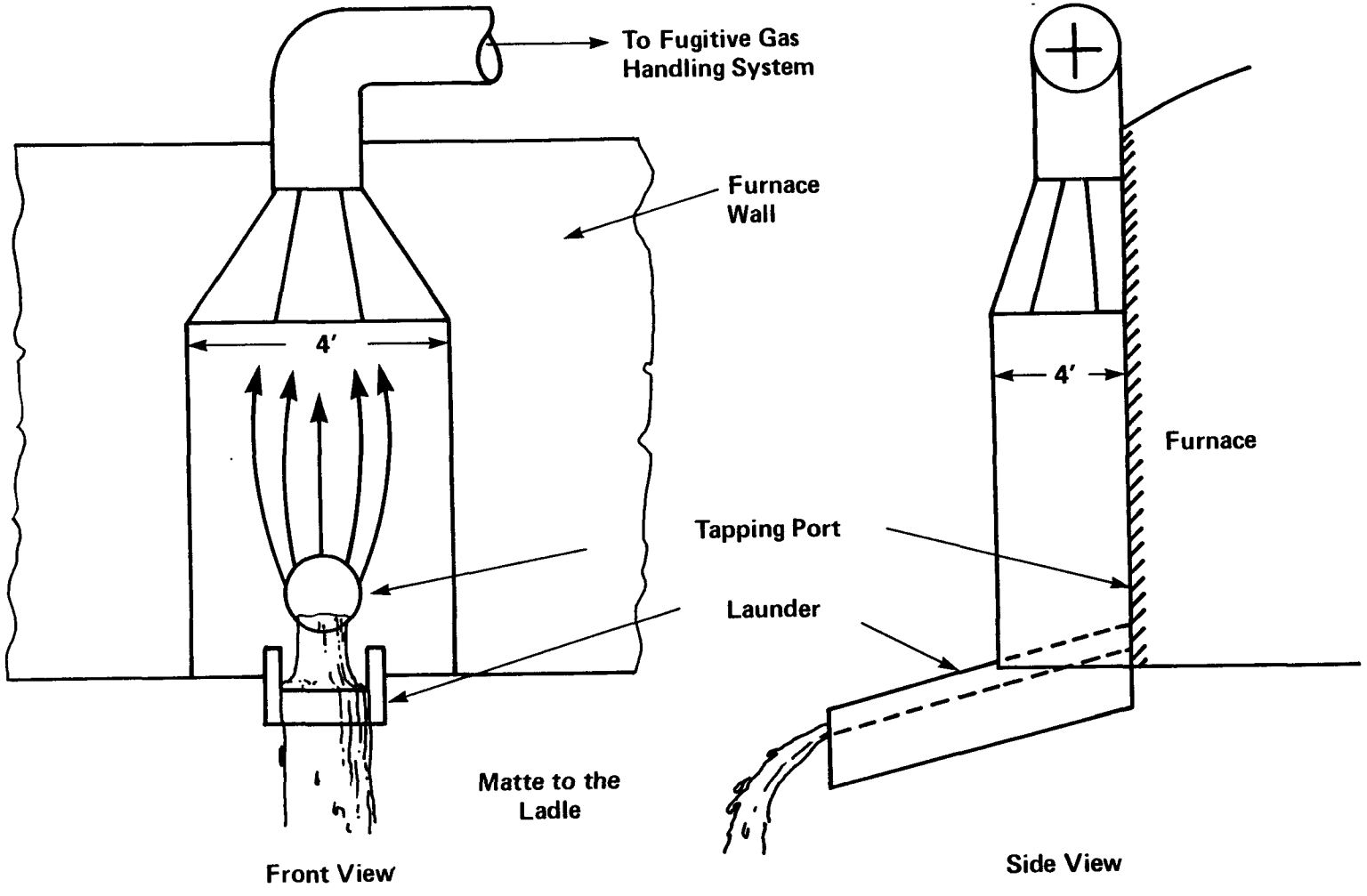

Figure 4-25. Typical hooding for a matte tapping port.

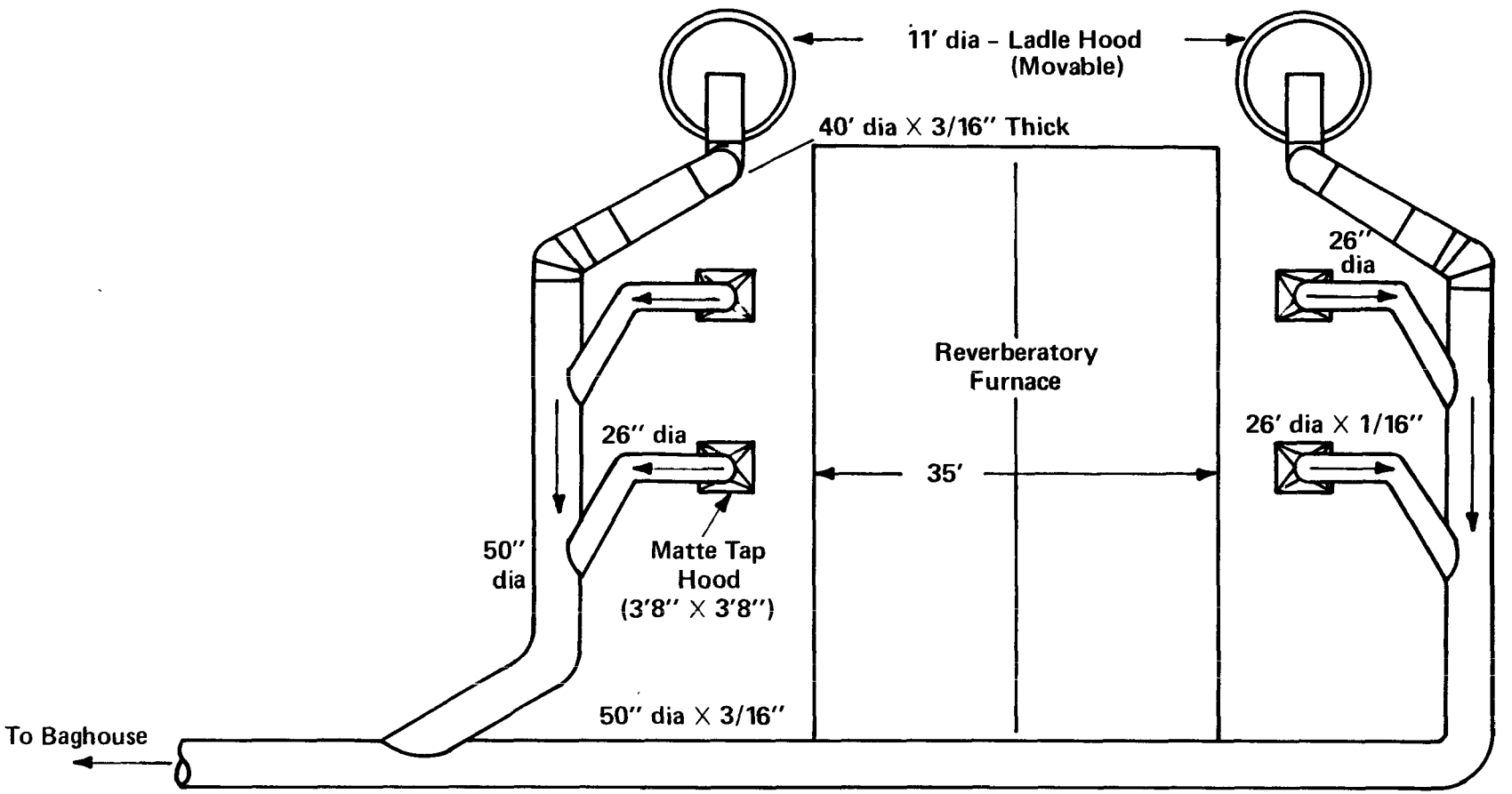

Figure 4-26. Schematic of a typical fugitive emissions control system for matte tapping operations.[58]

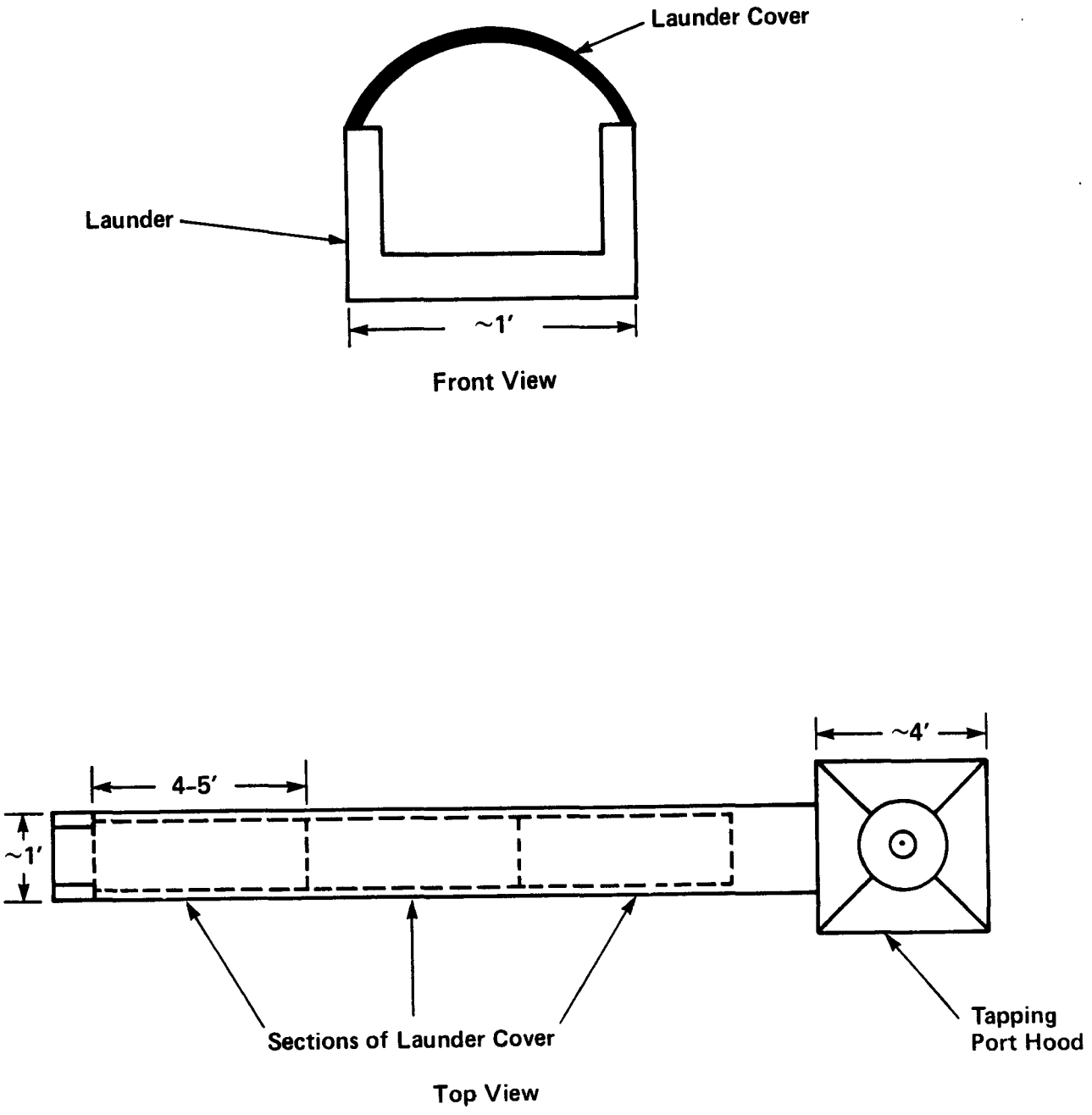

Figure 4-27. Typical sectional launder covers.

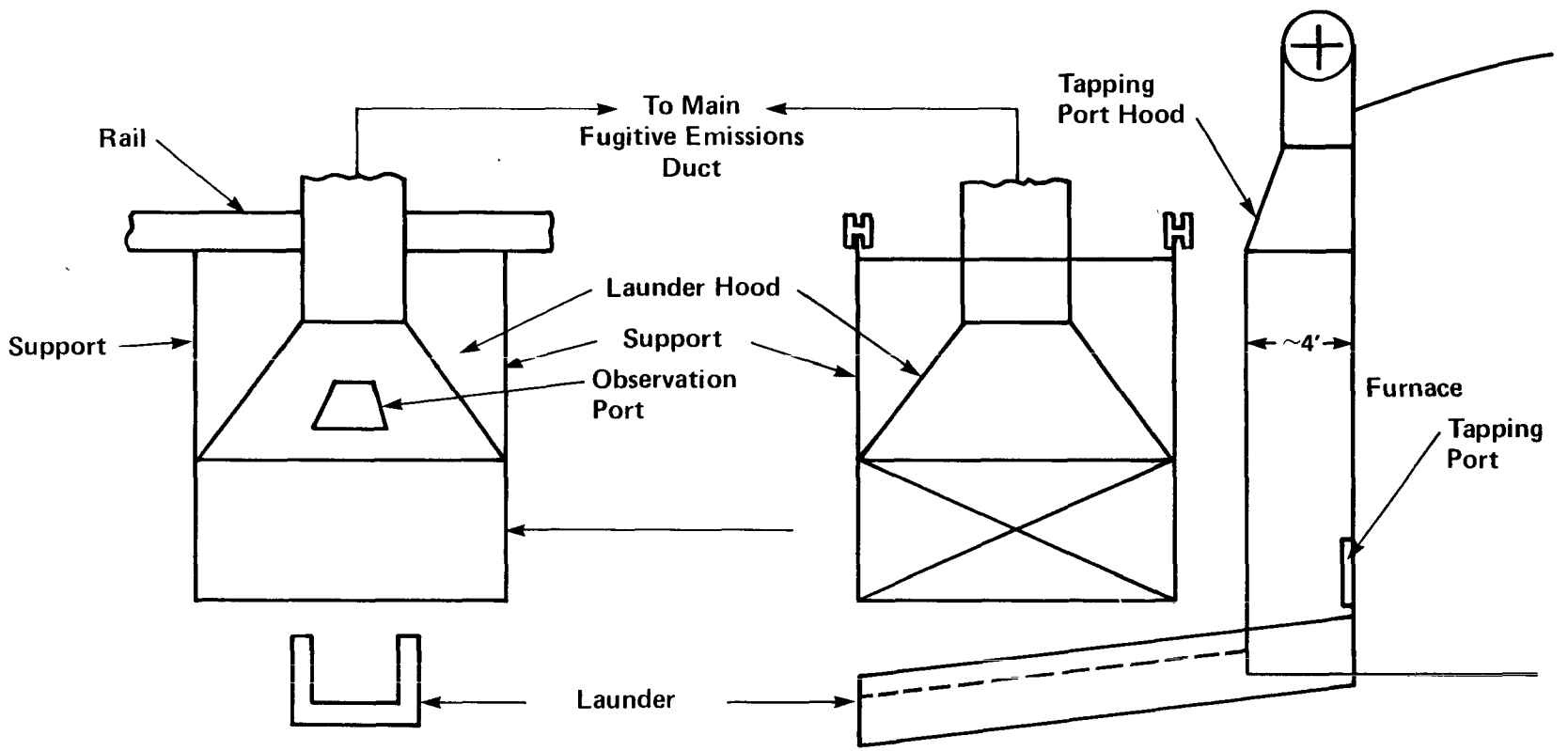

Figure 4-28. Launder hoods utilized at the Phelps Dodge–Morenci Smelter for the capture of fugitive emissions generated during matte tapping operations.

movable and is placed over the launder during tapping operations. The ventilation rate for each hood is approximately 150 Nm^3/min (5,400 scfm). Visual observations yielded an estimated capture efficiency of 90 percent. This type of hood can be effective if the surrounding atmosphere is calm; however, if the air currents within the furnace building are strong, a major portion of the emissions will be blown out from under the hood.

As suggested by Figure 4-26, movable hoods can be employed to capture emissions that occur at the ladle. Figure 4-29 illustrates the type of ladle hood that is used at the ASARCO-Tacoma smelter. The dimensions of the matte tap hoods used at the Tacoma facility are also presented in Figure 4-29. Emissions that are captured by the ladle hooding are evacuated to the main fugitive emissions duct via the 102-cm (40-in.) diameter offtake, as illustrated. The ventilation rate at each ladle hood is about 570 Nm^3/min (20,000 scfm). The ladle hood is retractable and is lowered into place over the ladle just prior to tapping. The ladle hood is lowered and raised via use of a cable and winch.

As indicated by Figure 4-26, the matte tapping fugitive emissions capture system at the ASARCO-Tacoma facility employs both tap port hoods and a ladle hooding system. Emissions testing and visual observations (see Section 4.7.7.1) conducted by the EPA at the Tacoma smelter indicate that this capture system is quite effective in capturing fugitive emissions generated during matte tapping operations. Visual observations indicate that the capture efficiency of this system is probably in excess of 90 percent.[58] Consequently, from an alternative control standpoint, the ASARCO system applied at Hayden and Tacoma seems to be a viable alternative for the capture of fugitive emissions generated during matte tapping operations.

4.7.5.2 Control of Fugitive Emissions From Slag Skimming Operations. Slag skimming is the process by which molten slag is removed from the smelting furnace for disposal. Slag is skimmed from the furnace through skim bays that may be located on the sides or at one end of the furnace. As with matte tapping ports, the number and location of

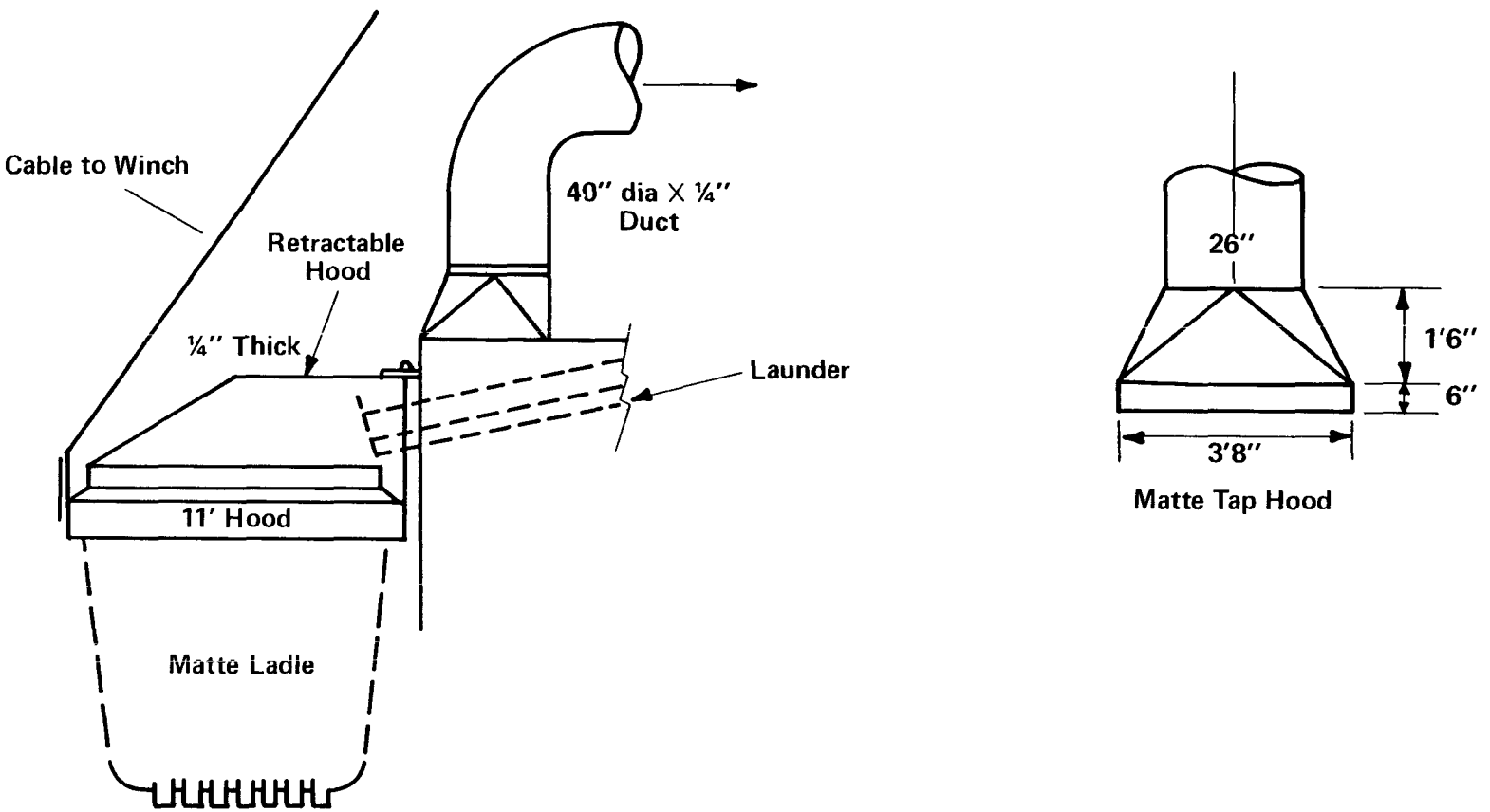

Figure 4-29. Schematic of the matte tapping and ladle hoods at the ASARCO-Tacoma Smelter.

the skim bays will vary depending upon the size and type of furnace. Normally, slag is skimmed from one bay at a time and conveyed through launders into one or several slag pots (ladles). Slag pots may range in capacity from 3 to 17 m^3 (100 to 600 ft^3). A single slag skim may last from 10 to 20 minutes.

Because slag skimming is very similar to matte tapping, the fugitive emissions capture technology used for both operations is quite similar. Local exhaust hoods are employed over skim bays and slag launders are either partially or completely covered. Design rates for skim bay hoods vary from smelter to smelter; however, they normally range from 566 to 850 Nm^3/min (20,000 to 30,000 scfm).[58]

A schematic of the slag skimming fugitive emission control system used at the ASARCO-Tacoma smelter is presented in Figure 4-30. The slag skim hoods are pyramidical in shape, with a 1.2-m by 2.4-m (4 ft by 8 ft) rectangular cross section, and they are less than 0.9 m (3 ft) above the skim port. A larger exhaust hood with a 2.4-m by 4.3-m (8-ft by 14-ft) rectangular cross section is situated directly above the slag pot transfer point. In addition, each launder is covered with a fixed hood. During skimming, the slag skim hood operates at about 142 Nm^3/min (5,000 scfm), while the hood above the slag pot operates at approximately 560 Nm^3/min (20,000 scfm). Emissions that are captured by the launder hooding are vented to either the slag skim hood or the slag pot hood.

From visual observations made by the EPA at the Tacoma smelter, it was determined that this type of hooding system achieves a capture efficiency of approximately 90 percent.[58] Consequently, the Tacoma system is considered to be a viable alternative for the control of fugitive emissions generated during slag skimming operations.

4.7.6 Capture of Fugitive Emissions From Converter Operations

Primary converter hoods capture the majority of the process emissions generated during converter blowing operations with the exception of some emissions that escape due to primary hood leakage. However, during converter charging, skimming, and pouring operations, the mouth of the converter is no longer under the primary hood, thus

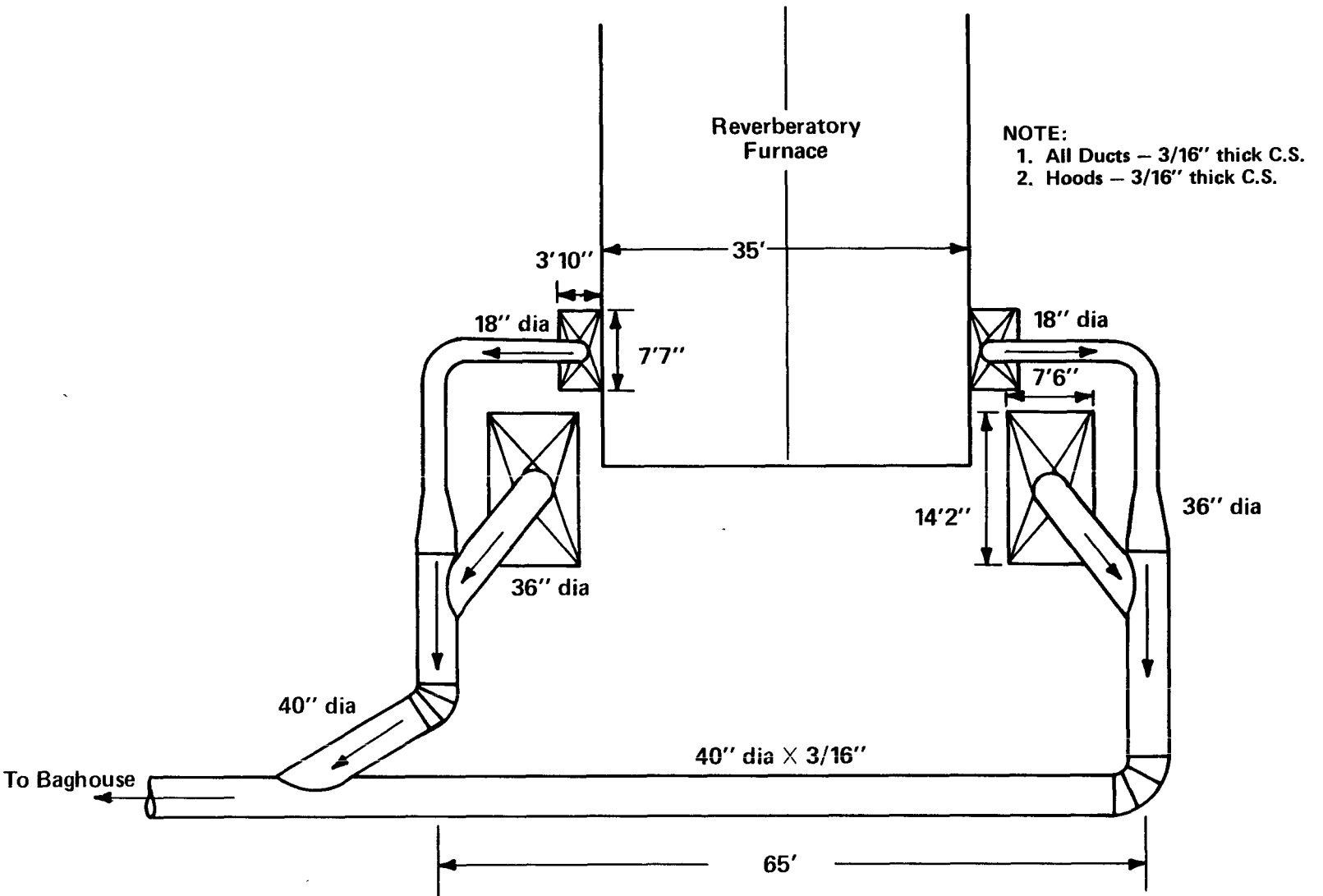

NOTE: The dimensions indicated are those of a system of this type currently utilized at the ASARCO-Tacoma facility.

Figure 4-30. Schematic of the slag skimming (plan view) fugitive emissions control system at the ASARCO-Tacoma Smelter.[58]

significant quantities of fugitive emissions escape capture by the primary hood. Fugitive emissions are also quite extensive during the converter holding mode as discussed in Section 3.3.2.4.

Previously conducted emissions testing by EPA has indicated that converters are the most significant sources of fugitive particulate and SO_2 emissions within primary copper smelters (see Tables 3-5 and 3-6). There are three basic approaches being applied to capture fugitive emissions from converter operations: (1) general ventilation, i.e., building evacuation; (2) secondary mechanical hoods; and (3) secondary mechanical hoods coupled with air curtains.

4.7.6.1 General Ventilation as a Means of Capturing Fugitive Emissions Generated by Converter Operations. Building evacuation has historically taken the form of either natural air changes due to wind and atmospheric density differences or mechanically assisted air changes. However, some engineering considerations must be made before applying a simple rate-of-air-change method for designing an industrial ventilation system. The rate-of-air-change method estimates are based on room volume only and do not consider the rate of evolution of the contaminant, the number of heat sources, or the natural draft due to building configuration. For example, a general ventilation installation designed by the rate-of-air-change method can, under some conditions, actually cause the contaminant to be spread throughout the building, thus increasing the volume of dilution air required to maintain hygienic conditions. This situation occurs when the distribution of the ventilation air supply is poorly controlled. Uncontrolled airflows into a building due either to negative pressure in the building or to poorly designed air supply distributors may not only cause recirculation of the contaminant but also may upset the local ventilation systems. It is therefore important that the amount of air, its location of entry into the building, and its direction be controlled. For example, Figure 4-31 shows a convective flow from a heat source (such as a ladle of molten metal) rising to be exhausted through a roof ventilator. Figure 4-32 shows an uncontrolled air supply that results in a disrupted rising plume and recirculation of the contaminant throughout the building.

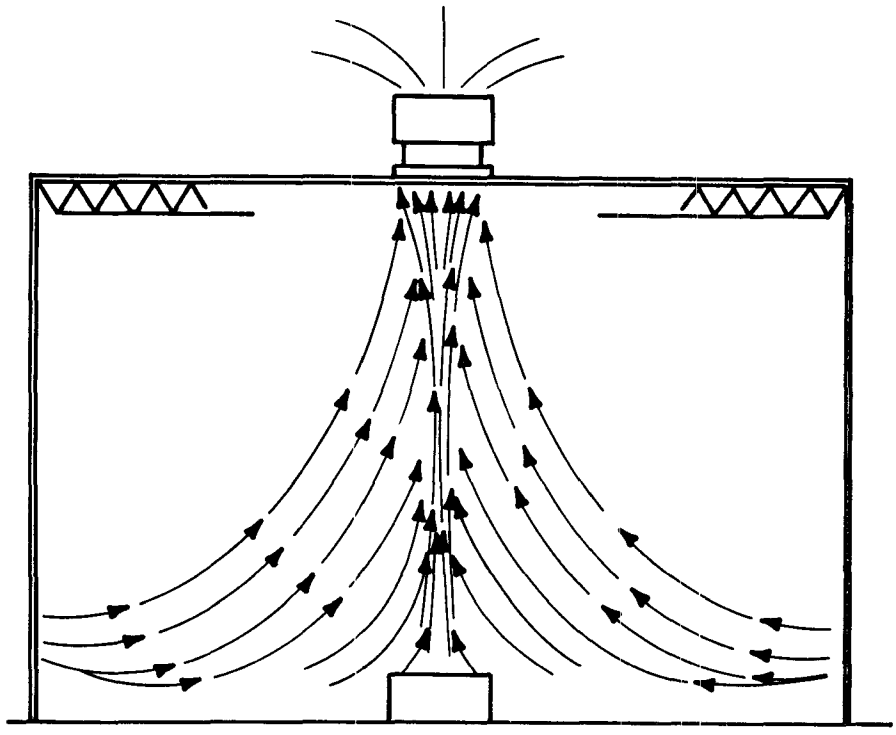

Figure 4-31. Controlled airflow from a heated source.[58]

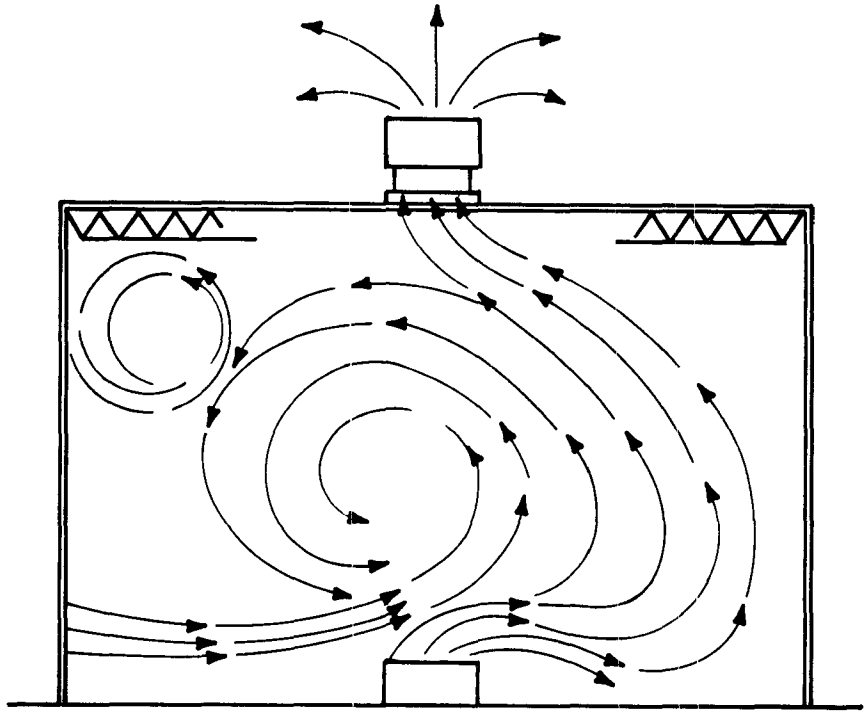

Figure 4-32. Uncontrolled airflow from a heated source.[58]

Natural air changes take place when hot air from the ground level heat sources rises due to its buoyancy. If, however, a point exists within the building where the temperature of the surrounding air is equal to that of the rising column of hot air, buoyancy is lost. Therefore, natural air changes will take place only if the temperature of the rising column of hot air is high enough to maintain the buoyancy of the column until it is discharged through the roof monitors. However, in most hot metal workshops, this is not the case. Hot pools of contaminated air are formed under the building roofs. As a result, clean air entering the building will at times mix turbulently with pools of contaminated air and transport it downward to the occupied levels near the floor.

Increasing the ventilation rate is the most commonly used method of correcting such an air contamination problem. Increasing the rate of ventilation through the building will have the effect of raising the column of hot air. Increased ventilation can be obtained by increasing the area of supply openings and roof openings or by using mechanical means such as exhaust fans.

Building evacuation by means of natural air changes or by a combination of natural and mechanical air changes is used at most domestic copper smelters. The captured fugitive emissions are usually vented to the atmosphere either through roof monitors or through roof stacks.

At the ASARCO-El Paso smelter, the concept of controlled ventilation is being used to capture and collect the emissions from the converter aisle. Controlled ventilation is accomplished by controlling the airflow patterns within the building and determining the flow of air to be handled. Control of airflow in the ventilated area is obtained by isolating it from other areas and by the proper design and placement of inlet and outlet openings. A well-contained and isolated area results in the handling of a minimum volume of air. Proper location and sizing of inlet and outlet openings provide effective airflow patterns so that the fugitive emissions cannot escape to adjacent areas or recirculate within the area. The configuration of the con-

verter building inlet and outlet openings at the ASARCO-El Paso smelter is shown in Figure 4-33.

Isolation of the ventilated area at the ASARCO-El Paso smelter was accomplished by installing additional sheeting in the roof truss area along the converter building column lines to enclose the flow from the smelting furnace area. The tuyere punching platforms east of the three converters were enclosed. The larry car rail line at the west side of the converter building was enclosed to contain the dust and SO_2 released when the larry cars were emptied. The location and sizes of these enclosures were selected to provide maximum feasible containment without interference with metallurgical operations. Partitions within the roof of the converter building were provided to prevent lateral migration of fume into adjacent areas.

The air velocity through the inlet openings was controlled to provide directional flow control and supply an adequate volume of air into locations where needed. This was achieved by using adjustable louvers on air inlet openings through building walls. Ventilating outlets are located at the ridge line of the converter building roof in the center of each partitioned area.

Inlet air is admitted to the converter aisle through louvers and permanent openings in the east and west walls of the building. Makeup air for the zinc holding and reverberatory furnace matte tap exhaust systems, which operate periodically, enters through adjustable louvers along the west wall. Inlet air for the reverberatory furnace charge area enters through a permanent opening in the south wall for the elevated-line railroad train and through adjustable louvers along the west wall. Inlet air for the extremes of the converter building is admitted through egress openings and louvers along the east and west walls and through a permanent opening in the south wall. The latter opening is permanent to accommodate the fairly frequent lead matte car railroad traffic.

During winter operation, a majority of the gravity roof ventilators in the extremes of the converter building are closed to keep heat in the building. This requires partial closing of inlet air louvers.

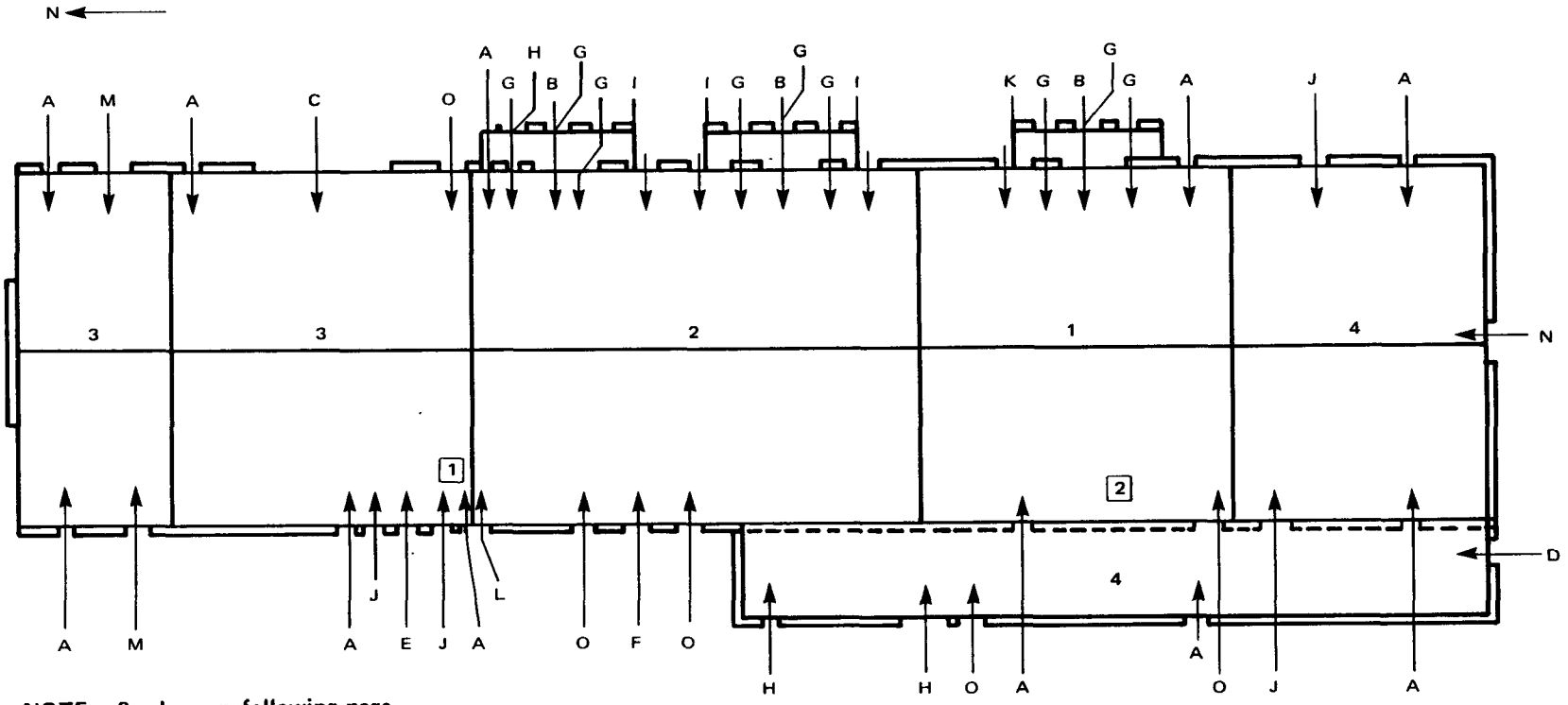

NOTE: See key on following page.

Figure 4-33. Inlet-outlet openings in converter building at ASARCO-El Paso.[58]

INLET (AIR INTAKE) SCHEDULE (NEW BAGHOUSE SYSTEM)

KEY NO.	TYPE	SIZE	NO. REQD.	EACH (scfm)	TOTAL (scfm)
PERMANENT OPENINGS					
A	Egress Openings in Walls	7'-6"H × 3'-8"W	7	13,500	94,500
B	Converter Wall Openings	5'-0"H × 16'-0"W	3	40,000	120,000
C	Anode Casting Wheel Opening	12'-0"H × 37'-0"W (20 ft^2 Net Opening)	1	60,000	60,000
D	Hi-Line Track Entrance	12'-0"H × 8'-0"W	1	45,000	48,000
E	Zinc Fuming Wall Opening	3'-2"H × 4'-6"W	1	7,000	7,000
F	Skull Breaker Wall Opening	5'-8"H × 5'-8"W	1	16,000	16,000
LOUVERED OPENINGS					
G	Tuyere Puncher Housing	1'-8"H × 1'-0"W	9	1,300	11,700
H	Hi-Line Track Enclosure, #3 Conv.	3'-2"H × 2'-3"W	3	3,000	9,000
O	Skull Breaker Wall Openings	5'-3"H × 6'-3"W	3	16,000	48,000
I	#2 & 3 Converters	4' 5"H × 5'-6"W	3	16,000	48,000
J	Zinc Fuming Wall	3' 2"H × 5'-0"W	2	6,500	13,800
K	#1 Converter	4' 5"H × 6'-3"W	1	12,000	12,000
				TOTAL	485,000
AUXILIARY LOUVERS					
C	Matte Tap Hood Makeup Air	5' 8"H × 6'-3"W	2	15,000	30,000
L	Slag Tap Hood Makeup Air	6'-11"H × 8'-3"W	1	25,000	25,000
				TOTAL	55,000
A	Egress Openings in Walls	7'-6"H × 3'-8"W	4	13,500	54,000
H	Lead Slag Track Entrance	12'-0"H × 10'-0"W	1	60,000	60,000
J	Louvered Openings	3'-2"H × 5'-6"W	2	7,000	14,000
M	Louvered Openings	5'-8"H × 8'-0"W	2	21,000	42,000
				TOTAL	170,000

OUTLET (EXHAUST) SCHEDULE

Existing Hood Systems		Proposed Roof Evacuation (New Baghouse System)		Gravity Draft at Extremes of Building (Variable)	
KEY	scfm	KEY	scfm	KEY	scfm
1	25,000	1	130,000	5	68,000
2	30,000	2	200,000	6	102,000
		3	136,000		
		4	16,000		
TOTAL	55,000		488,000		170,000

Figure 4-33. (continued).

The gravity roof ventilators over the portion of the building that is vented to the building evacuation system are normally closed; however, they automatically open in the event of power failure to provide emergency ventilation. The ventilators over the extreme ends of the converter building are normally open; they remove heated air from areas where emissions are slight.

Railroad doors are kept closed when cars and slag haulers are not entering or leaving the building. Allowing these doors to remain open can adversely affect the building evacuation system, with a design volume of 5,660 actual m^3/min (200,000 acfm), depending on wind conditions; e.g., (1) airflow is reduced through the normal inlets, resulting in poor inlet air distribution; (2) the air moving through the shop forms eddies that pick up fume from the furnaces, entrain it, and spread the fume throughout the converter building; and (3) a strong wind through the railway car door entering the building results in air volume exceeding the total ventilating capacity of the building evacuation system. A positive pressure within the building could occur, and fume could be forced out of the building through the normal inlet openings.

The present volume evacuation rate of this system at the ASARCO-El Paso smelter is 16,800 Nm^3/min (600,000 scfm)--equivalent to 18 air changes per hour.[58] Supplementary air is provided when the zinc slag holding furnace or reverberatory furnace matte launder local exhaust systems are in use. The average exhaust gas temperature from the converter building after the exhaust gases from the four building exhaust ducts mix is 55° C (130° F). Nominal duct design gas velocities are 1,500 m/min (5,000 ft/min) from the converter building to a baghouse and 900 m/min (3,000 ft/min) from the baghouse to the annulus of the main stack. The building exhaust gases contain negligible water vapor and SO_3. Ideally, 100 percent capture could be achieved by this system. However, due to the need for egress and entry openings, some losses are to be expected. Thus, performance is set at 95 percent.[58] It is evident, however, from visual observations, that a higher air change rate than that applied at El Paso is needed to alleviate exacerbated worker exposure.

The baghouse receiving building ventilation gases at the ASARCO-El Paso smelter contains 4,800 bags, each 15 cm (6 in.) in diameter by 9 m (30 ft) long. It is sized with a nominal air-to-cloth ratio of 3 to 1. Three backward curved air foil fans are used on the clean-air side of the baghouse and are sized on the basis of 110 percent of the estimated airflow. The results of tests that EPA performed on this baghouse are summarized in Section 4.7.7.

4.7.6.2 Secondary Mechanical Hoods as Means of Capturing Fugitive Emissions Generated by Converter Operations. In normal practice, primary converter hoods are used when the converters are in the blowing mode. However, fugitive emissions that occur as a result of primary hood leaks are uncontrolled unless some type of additional capture equipment is employed. Secondary mechanical hoods can be used to capture emissions that result due to primary hood leaks. It is important to note, however, that these hoods are not designed to capture fugitive emissions that occur during the charging, skimming, and holding modes; thus, only emissions that escape the primary hood during blowing are captured. Currently, there are several domestic primary copper smelters that use some form of secondary mechanical hooding to capture fugitive emissions that result from primary hood leaks. The types of hoods currently in use are:

- Fixed type--Attached to the primary hood; currently in use at Phelps Dodge-Ajo, Phelps Dodge-Hidalgo, Phelps Dodge-Morenci, and Kennecott-Magna.
- Retractable--Supported by walls on either side of the converter; currently in use at ASARCO-Hayden.

The fixed-type hood, illustrated in Figure 4-34, is approximately 3 m (10 ft) long, 6.4 m (21 ft) wide, and 1.7 m (5.5 ft) high and is affixed to the upper front side of the converter primary offtake hoods. Visual observations indicate that this type of hood is only marginally effective in capturing fugitive emissions that are generated during blowing.[58] Therefore, this discussion will concentrate on the retractable-type hood (shown in Figure 4-35).

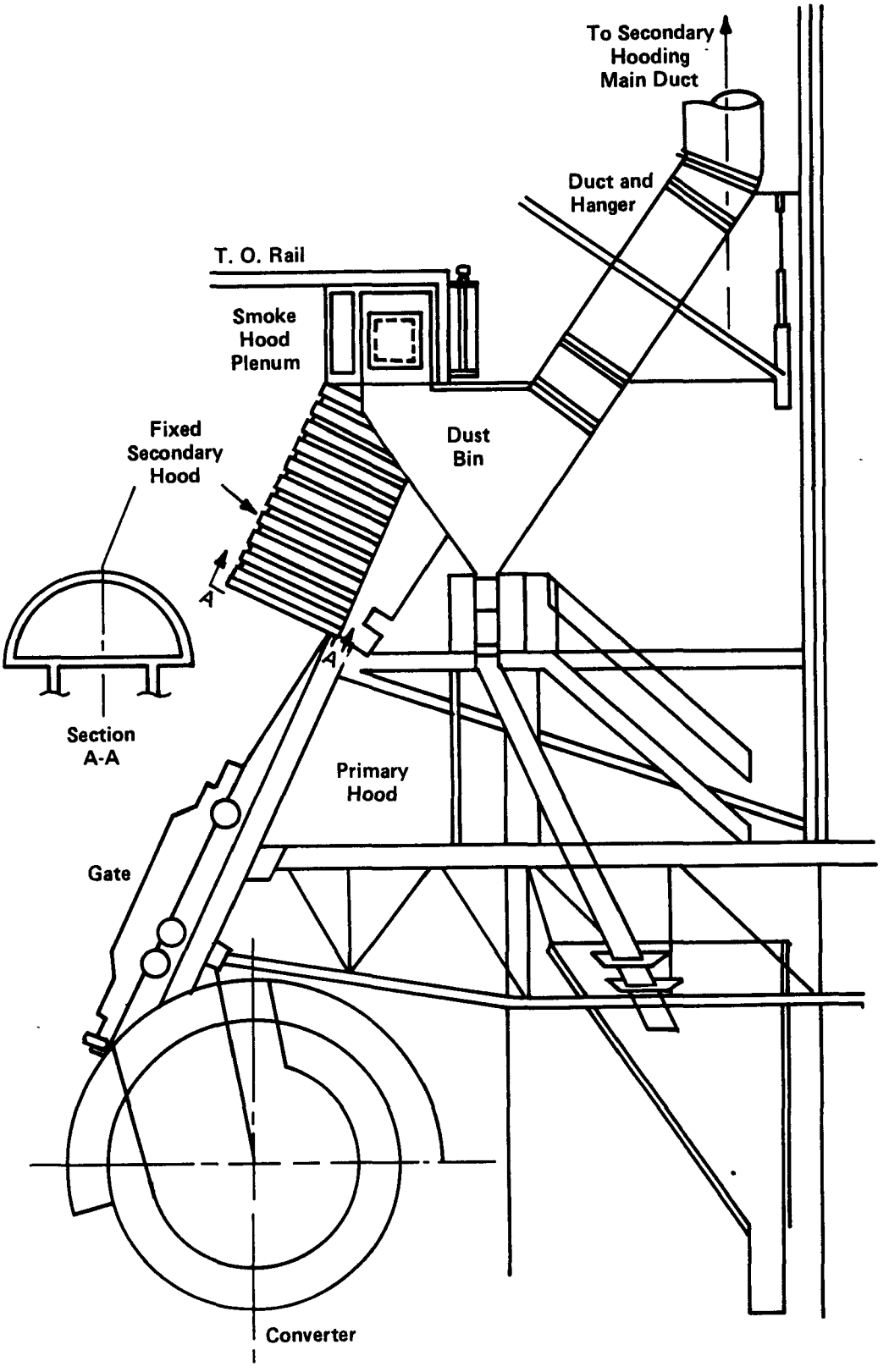

Figure 4-34. A typical fixed secondary converter hood.[58]

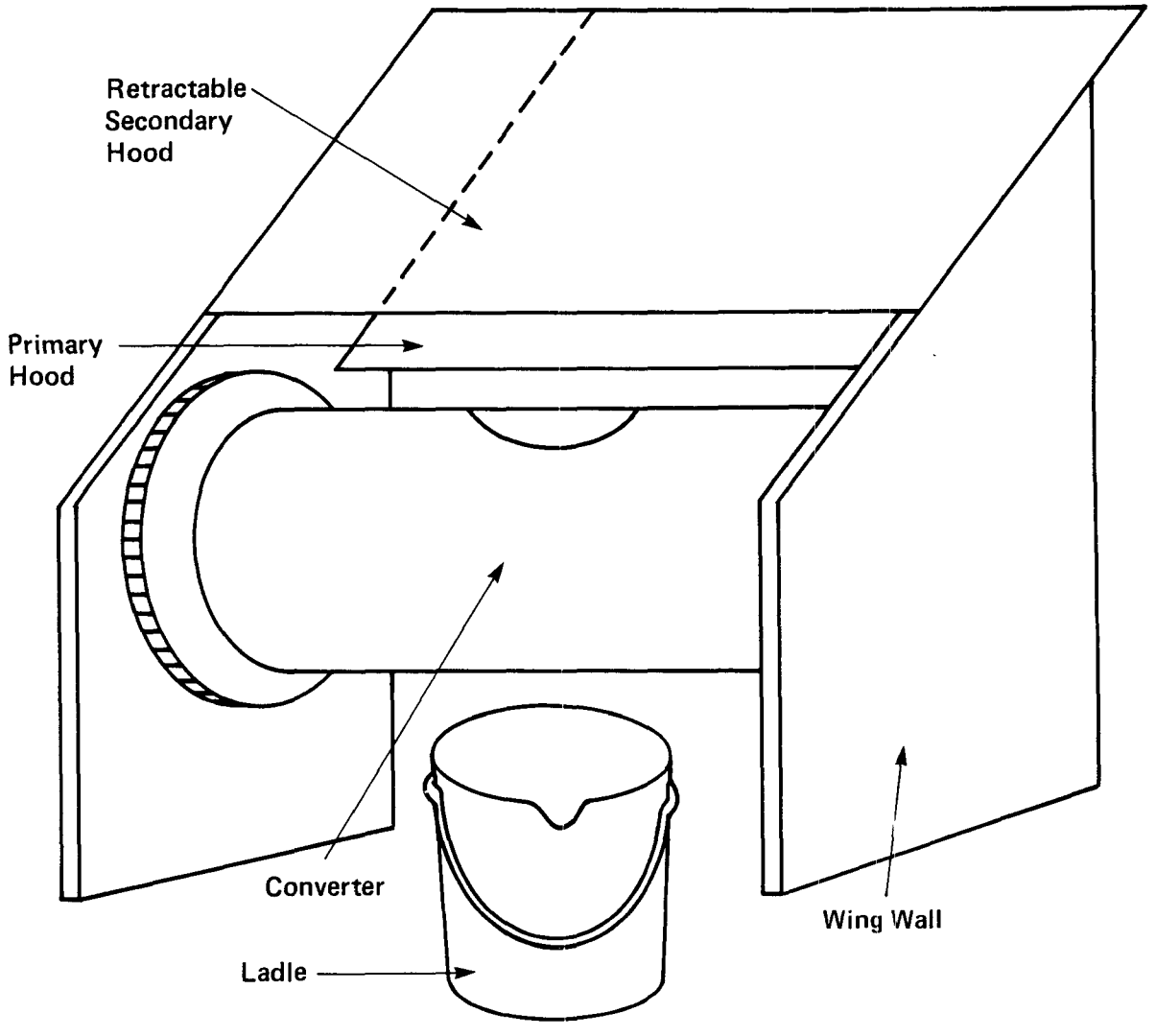

Figure 4-35. Retractable-type secondary hood as employed at ASARCO-Hayden.

Subjective visual observation of a retractable-type secondary hood at the ASARCO-Hayden smelter yielded estimated capture efficiencies of up to 75 percent for fugitive emissions that escaped the primary hood during blowing operations. Thus, although the hood is not intended to capture emissions that occur while the converter is "rolled out," it is reasonable effective in capturing fugitive emissions that occur during blowing operations.

The secondary hood, as shown in Figure 4-35, is retracted during charging, pouring, and skimming operations so that the crane operator can have access to the converter mouth as well as the area directly in front of the converter. Then, as blowing begins, both the primary and secondary hoods are lowered into position over the mouth of the rolled-in converter. The most significant source of emissions that escape capture by this hooding system during blowing are slots in the top of the secondary hoods through which the cables for primary hood retraction are passed.

In summary, the ASARCO-Hayden hood is judged by EPA to be reasonably effective in capturing fugitive emissions generated by converters during the blowing mode. The primary shortcoming of this type of hood is its inability to capture fugitive emissions that occur during operations other than blowing. The following discussion dealing with fixed enclosure/air curtain systems will address the capture of fugitive emissions generated during all converter operating modes.

4.7.6.3 Air Curtains and Fixed Enclosure Hoods as Means of Capturing Fugitive Emissions Generated by Converter Operations. Another method of controlling fugitive emissions from copper smelter converting operations involves the use of an air curtain system along with a secondary hood system. Although air curtains for the control of fugitive emissions are not currently being used in the domestic primary copper smelting industry, they are being used abroad and in other U.S. industries.[58]

An air curtain is a suitably shaped air jet with sufficient momentum to resist the forces of fugitive gas streams working against it and to maintain its continuity across the opening it protects.

Consideration in air curtain design must also be given to secondary or entrained flows that start forming as the air curtain jet stream leaves its slot or nozzle. As the entrained flows become fully mixed with the air curtain jet stream some distance from the nozzle, the hot or cold secondary flows are carried from one side of the air curtain jet stream to the other where they are ducted for suitable discharge (see Figure 4-36). The greater the entrained flow, the greater the energy loss. To minimize energy loss, a thick, slow-moving jet stream with a large air volume is required. A basic rule in the design of air curtains is to project the thickest and lowest velocity air stream possible across the shortest dimension of the opening.

The design of air curtains is quite complex because of the curving pattern of the airflow from the air curtain jet nozzle or slot. Also, the presence of secondary flows further complicates the design. Air curtain design methods are discussed in References 61, 62, and 63.

The type of air curtain system being used at the Onahama and Naoshima primary copper smelters in Japan is shown in Figure 4-37. The capture/shielding device includes two steel plate partitions, one on each side of the converter month. The air jet is blown from a slot at the top of one of the plates across the opening to provide a sheet or curtain of air that prevents fugitive emissions from escaping. The other plate is equipped with an exhaust hood. The opening allows the crane cables to move into position above the converter mouth.

A propeller fan is used to push the air through an elongated slot on one side and a backward inclined fan provides suction on the opposite side to pull in both the fugitive gases and the push air. Captured gases pass through steel duct work to a baghouse. The combined temperature of the converter fugitive gases with 100 percent of the push air entering the duct work on the pull side of the air curtain is approximately 80° C (100° F), which makes gas cooling unnecessary before gas-stream entry into the control device.

The inlet air forming the air curtain above the converters at the Naoshima smelter has a flow rate of approximately 600 Nm^3/min (21,000 scfm). The exhaust hood on the opposite side pulls in approximately

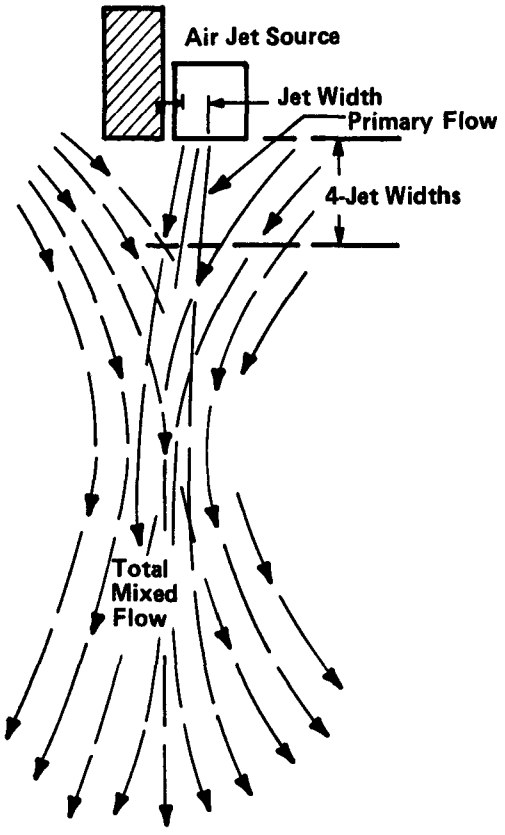

Figure 4-36. Entrained flow diagram.[58]

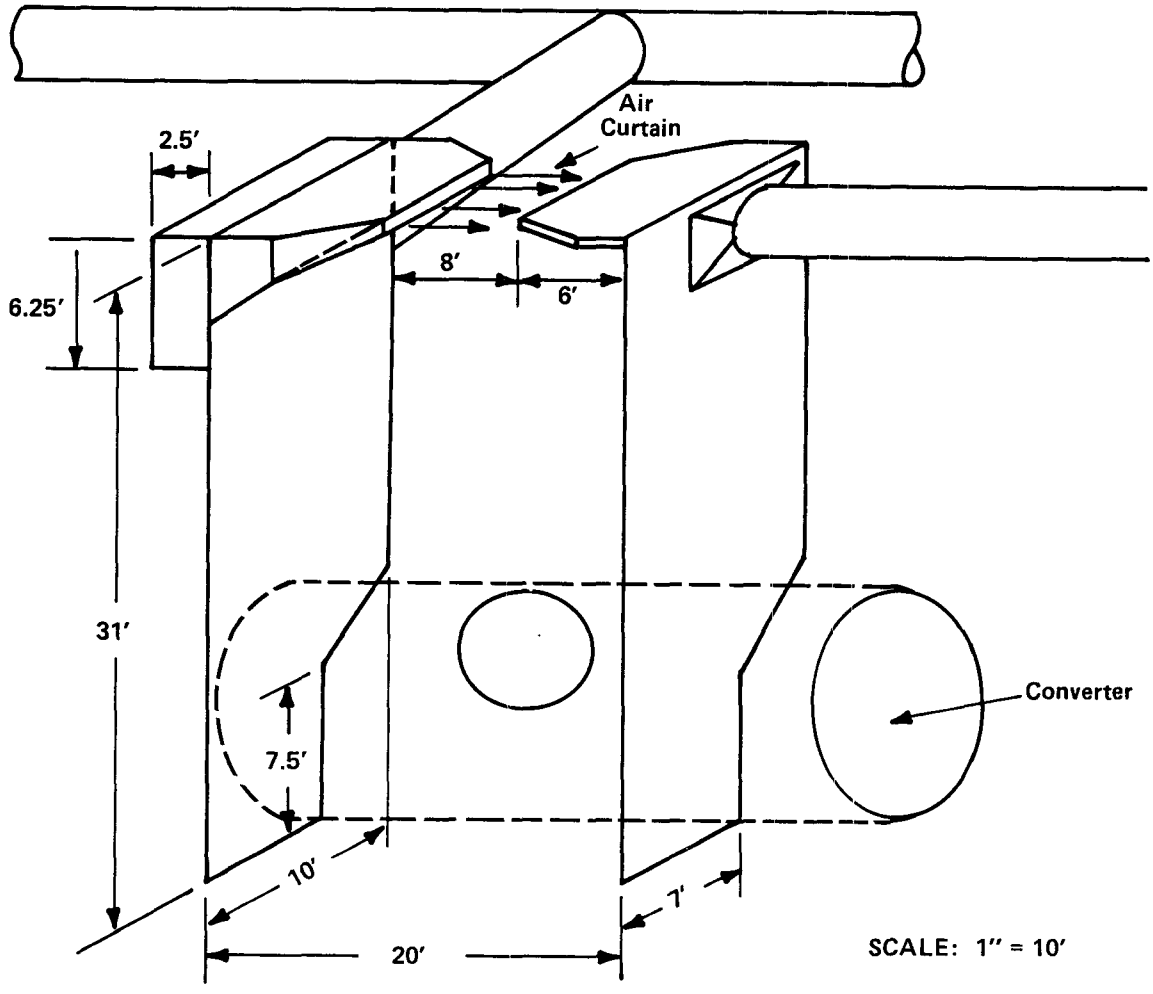

Figure 4-37. Converter air curtain/secondary hooding system as employed at the Onahama and Naoshima smelters.[58]

1,000 Nm^3/min (35,000 scfm) of gas to the main system. The capacity of the total pull system at this smelter is three times this value or 3,000 Nm^3/min (105,000 scfm) to allow for the operation of three hoods at a time. According to the Naoshima authorities, the overall collection efficiency of these hoods for fugitive emissions is approximately 90 percent.[58] An air curtain system of similar design is currently being installed at the ASARCO-Tacoma smelter. The Tacoma system will eventually handle fugitive emissions from three converters.

The Tamano copper smelter in Japan uses a differently designed air curtain system along with a fixed hood, which is essentially a total enclosure equipped with front doors and a retractable roof, for controlling fugitive emissions from each of its three converters. (Usually one converter is operated at a time.) A sketch of the air curtain system being used at the Tamano smelter is shown in Figure 4-38. The enclosure has two front doors and a movable roof that is slightly inclined toward the front. The air curtain ducts are located at the top of the enclosure level at a position to push air from one side of the converter to the other side. Ambient air is supplied by a ground fan rated at 70,000 Nm^3/h (41,000 scfm).

The typical functions of the air curtain system and secondary hood system during each mode of a converter cycle at the Tamano smelter are summarized in Table 4-17 and are described in the following paragraphs.

For charging matte and other material to the converter, the secondary hood doors and the movable roof are opened and the air curtain system is turned on. When opened, the movable roof slides toward the side away from the air curtain ducts. The air curtain system is turned on only during charging of the converters when the movable roof is kept open. The movable roof is closed during all other modes of converter operation. A ladle containing charge material is brought inside the secondary hood enclosure by an overhead crane. The converter is rolled down to an inclined position. The ladle is lifted up by the crane, and the material is charged into the converter.

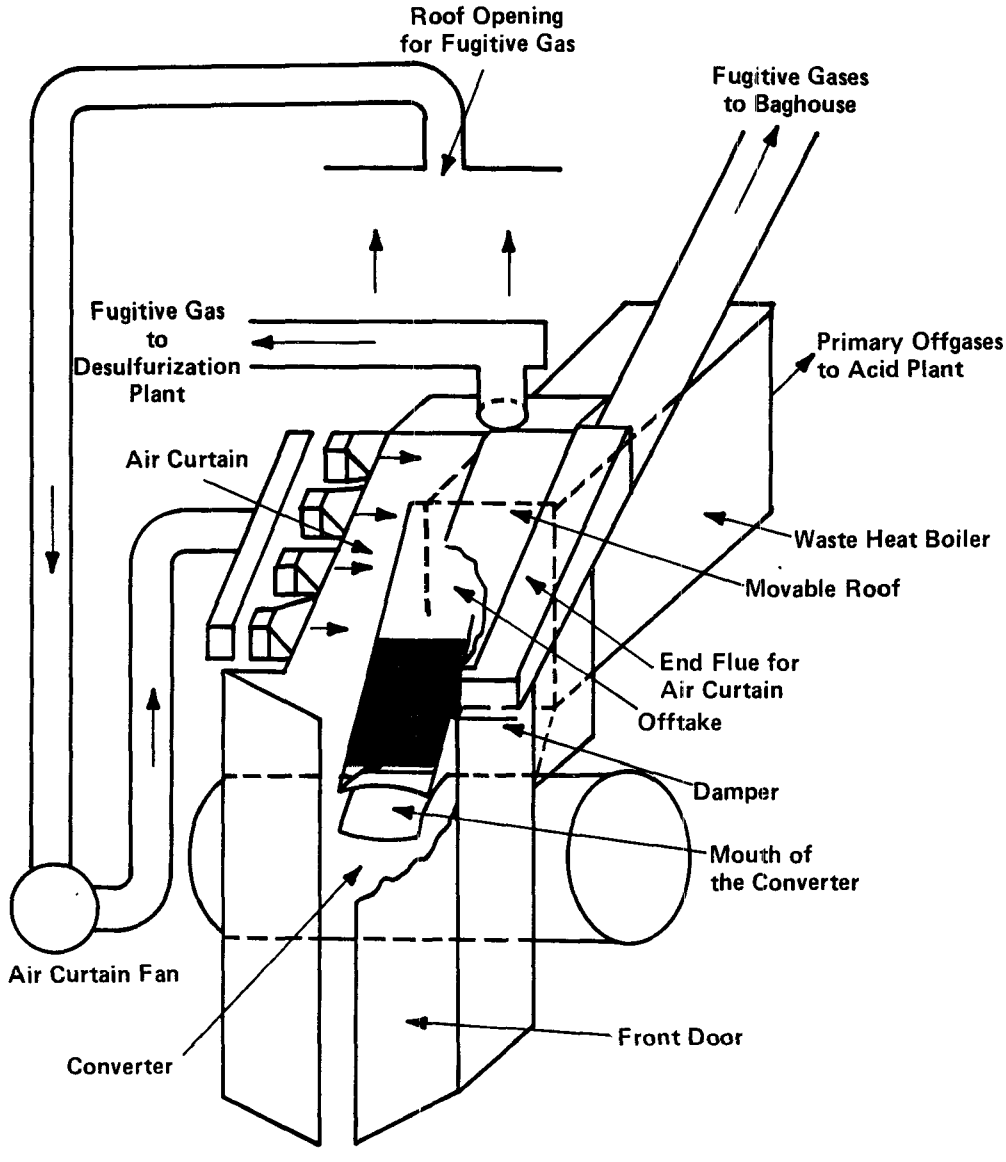

Figure 4-38. Schematic diagram of the converter housing/air curtain system at the Tamano smelter.[58]

TABLE 4-17. FUNCTION OF AIR CURTAIN AND SECONDARY HOOD SYSTEM DURING VARIOUS MODES OF CONVERTER OPERATION AT TAMANO SMELTER[58]

Mode of operation	Configuration of primary hood and secondary hood[a]
Material charging (matte, or cold dope)	A, C
Slag blow	B, D
Slag discharge	A, D
Copper blow	B, D
Blister discharge	A, D

[a]Primary hood position:
A = damper closed.
B = damper open.
Secondary hood position:
C = doors and roof open and air curtain on.
D = doors and roof closed and air curtain off.

Usually three ladles of matte and one boat of cold material are charged to the converter within a 10- to 30-minute period. Actual charging of each ladle lasts 1 to 1½ minutes. At the completion of material charging, the ladle is brought out from the enclosure. The converter is moved to its upright position and its mouth is contained in the primary hood. The secondary hood housing doors and roof are closed.

During charging and discharging of material, two fugitive gas streams are generated. A relatively high concentration gas up to 30,000 Nm^3/h (18,000 scfm) in volume, generated in the vicinity of the converter mouth, is captured by the duct work located at the lower inside wall of the enclosure. The captured gas stream is continuously pulled into a lime desulfurization plant for treatment. The larger portion of fugitive gases is mixed with air generated by the air curtain system. The combined total gas flow of up to 190,000 m^3/h (6.7×10^6 cfm) is captured by a duct work located at the upper level of the enclosure. The captured gas is sent to a baghouse for particulate matter removal.

Any gases escaping from the air curtain system are recirculated through a building roof hood.

During the slag blow and copper blow, the converter mouth is housed under the primary duct, and the secondary housing doors and roof are closed. The primary offgases, which range between 65,000 and 75,000 Nm^3/h (38,000 to 44,000 scfm) from each converter are treated along with offgases from the flash furnace smelter in a 156,000-Nm^3/h (92,000-scfm) capacity acid plant for SO_2 removal. Any fugitive emissions generated from the converter due to primary hood leaks will pass to the baghouse and then to the stack.

During slag skimming at the end of each slag blow and during blister discharge at the end of copper blow, a ladle is brought into the secondary hood enclosure by the overhead crane and placed on the ground in front of converters. The secondary hood doors and roof are closed. The mouth of the converter is rolled down and the slag or blister is poured into the ladle. After the slag or blister discharge is completed, the converter mouth is moved up, the housing doors and roof are opened, and the ladle is moved out.

High SO_2 concentration gases and low SO_2 concentration gases are passed through the corresponding ducts to the lime desulfurization plant and the baghouse system, respectively.

Subjective evaluation of the air curtain and fixed enclosure system by visible observation at the Tamano smelter in Japan indicate the system to be at least 90 percent effective in controlling fugitive emissions.[58]

ASARCO's Tacoma facility is currently installing an air curtain system on one of their converters. The design volume for the system is the anticipated possible maximum, which would occur when two converters require 2,800 actual m^3/min (100,000 acfm) each.[64] Thus, the total design volume is 5,700 actual m^3/min (200,000 acfm) at 66° C (150° F). Design data for the ASARCO system are summarized in Table 4-18. ASARCO has estimated that the following overall capture efficiencies will be in evidence after the system is placed into operation:[65]

- ~98 percent during blowing
- ~60 percent during roll-in and roll-out
- ~85 percent during skimming
- ~85 percent during charging
- ~90 percent during holding.

The gases that are captured by the air curtain system will be subjected to particulate removal before being passed to the atmosphere.

Based upon data supplied by ASARCO, EPA has tentatively concluded that the ASARCO air curtain system will be able to achieve the capture efficiencies outlined above. EPA does feel, however, that the addition of doors and a retractable roof may merit consideration as a means of enhancing capture efficiency.

4.7.7 Summary of Visible Emissions Data for Fugitive Emissions Sources.

4.7.7.1 Local Ventilation Techniques Applied to Calcine Discharge, Matte Tapping, and Slag Skimming. The performance of local ventilation techniques used at the ASARCO-Tacoma smelter for the control of fugitive emissions from calcine discharge, matte tapping, and slag tapping operations was evaluated.[58] These techniques were previously described

TABLE 4-18. SUMMARY OF DESIGN DATA FOR THE ASARCO-TACOMA CONVERTER SECONDARY HOODING/AIR CURTAIN SYSTEM[64]

Mode of operation	Air curtain push rate, actual m^3/min	Main offtake evacuation rate, actual m^3/min
Matte charging	510 (18,000 acfm)	2,322 (82,000 acfm)
Blowing	-[a]	1,700 (60,000 acfm)
Slag skimming	510 (18,000 acfm)	2,322 (82,000 acfm)
Holding	510 (18,000 acfm)	850 (30,000 acfm)
Worst conditions[b]	1,020 (36,000 acfm)	4,644 (164,000 acfm)

[a]Air curtain will not be used during the blowing mode.

[b]Worst conditions would consist of either (1) two converters being charged simultaneously or (2) one converter being charged while another was being skimmed.

in Sections 4.7.4 and 4.7.5. Visual observations were made using either EPA Method 22 or EPA Method 9, depending on whether the emissions observed were intermittent or continuous. Method 22 is used to determine the occurrence of visible emissions and Method 9 is used to determine the opacity of emissions. A summary of the visible emissions data obtained is presented in Table 4-19.

Thirteen calcine transfer operations, averaging about 2 minutes in duration each, were observed. The visual observations were made using EPA Method 22 at the opening of the tunnel-like structure used to house the calcine hoppers and larry cars during the calcine transfer (discharge) operations. As the data indicate, no visible emissions were observed at any time.

Visible emission observations during reverberatory furnace matte tapping were also made at ASARCO-Tacoma using EPA Method 22. Simultaneous but separate observations were made both at the furnace tap port and at the launder-to-ladle transfer point. Sixteen taps, averaging approximately 5.5 minutes in duration, were observed. Out of the 16 observations made at the matte tap port, no visible emissions were observed 100 percent of the time during 14, with only slight emissions ranging from 1 to 3 percent of the time for the remaining 2. No visible emissions were observed at any time from the launder or launder-to-matte-ladle transfer point during all 16 observations.

Slag skimming emissions were observed using both EPA Methods 22 and 9. As with matte tapping, separate observations were made at the furnace skim bay location and at the slag-launder-to-slag-pot transfer point. Results obtained using EPA Method 22 for 8 observations at the slag tap port showed that visible emissions were observed about 5 percent of the time on the average, with the highest single observation showing the presence of visible emissions 15 percent of the time. Visual observations made at the slag-launder-to-pot transfer point indicated very poor performance, with visible emissions being observed 72 to 99 percent of the time over 11 slag taps. Additional data obtained using EPA Method 9 showed significant emissions, with opacities as high as 50 percent. Conversations with smelter personnel revealed

TABLE 4-19. SUMMARY OF VISIBLE EMISSION OBSERVATION DATA[58] FOR CAPTURE SYSTEMS ON FUGITIVE EMISSION SOURCES AT ASARCO-TACOMA[a]

Operation	EPA Method 22				EPA Method 9			
	Number of readings taken	Average observation time, min:sec	Average percent time emissions observed on all readings	Range of percent time emissions observed	Number of readings taken	Average observation time, min:sec	Average opacity, percent	Range of opacity percent observed
Calcine transfer system	13	1:55	0	0				
Matte tapping								
At matte tap port and launder	16	5:28	0.2	0 to 3				
At matte discharge into ladle	15	5:21	0	0				
Slag skimming								
At slag skim bay and launder	8	13:38	5.3	0 to 15	2	13:45	6	0 to 30
At slag discharge into pots	11	15:27	88	72 to 99	7	14:32	12	0 to 50

[a]Visible emission observations made June 24 through 26, 1980.

that the ventilation hood at the slag launder discharge point has been damaged when hit by a truck. Although an inspection of the ventilation hood and ancillary duct work showed no apparent damage, ventilation at this location was concluded to be inadequate to handle the volume of emissions and fume generated.

Visible emissions data for matte tapping and slag skimming operations were also obtained at the Phelps Dodge-Morenci smelter. EPA Methods 9 and 22 were employed. Observations of matte tapping operations involved the specific type of local capture hood discussed in Section 4.7.5.1 (see Figure 4-30). The results of the Method 9 observations for matte tapping, presented in Table 4-20, indicate that the Morenci hood does not achieve 100 percent capture. Average opacities ranged from 2 to 45 percent over 22 observation periods that ranged from 4 to 11 minutes in duration. Method 22 results, presented in Table 4-21, showed visual emissions to be in evidence 100 percent of the time during three of the four observation periods. Both types of observations (Methods 9 and 22) were made at the tapping port. Slag skimming observations involved an evacuated "doghouse" type enclosure. Method 9 results, presented in Table 4-22, indicated that this type of hood is reasonably effective in capturing emissions generated at the skim bay. Average opacities ranged from 0 to 11 percent over six observation periods that ranged from 6.25 to 33.00 minutes in duration. A subjective evaluation yielded an approximate 90 percent capture efficiency for this type of hood. One Method 22 observation of 30 minutes duration was made (see Table 4-22). Emissions were in evidence approximately 3 percent of the time.

In conclusion, the fugitive emissions control system for calcine discharge at the ASARCO-Tacoma smelter represents a most effective means by which to capture emissions generated during calcine discharge operations. Visual observations indicate that over 90 percent capture is possible.

The ASARCO-Tacoma matte tapping fugitive emissions capture system (see Section 4.7.5.1 for a complete description) also appears to represent the most effective system for the capture of fugitive emissions

TABLE 4-20. VISIBLE EMISSION OBSERVATION DATA FOR REVERBERATORY FURNACE MATTE TAPPING OPERATIONS AT THE PHELPS DODGE-MORENCI SMELTER[a]

Duration of observation period, min	Average opacity for observation period, percent	Range of individual readings
8.75	8.57	5 to 25
8.50	2.06	0 to 25
6.50	8.85	5 to 20
8.50	8.09	5 to 30
5.00	7.25	5 to 10
6.50	7.31	5 to 20
9.00	11.39	5 to 20
11.00	15.68	5 to 30
9.50	16.71	10 to 20
4.00	10.00	5 to 10
9.50	14.20	5 to 30
6.50	18.46	10 to 30
9.50	47.06	10 to 60
8.00	17.34	10 to 40
5.00	6.88	5 to 25
7.75	18.23	10 to 30
5.00	17.75	10 to 30
7.50	14.50	5 to 35
5.00	7.00	0 to 30
9.25	24.86	10 to 70
6.50	7.50	0 to 30
3.75	6.67	0 to 30

[a]Based on visual observations made in accordance with EPA Method 9.

TABLE 4-21. VISIBLE EMISSION DATA FOR REVERBERATORY FURNACE MATTE TAPPING OPERATIONS AT THE PHELPS DODGE-MORENCI SMELTER[a]

Duration of observation period, min	Percent of time emissions observed	Light reading, lux
6.0	100	350
7.0	100	175
5.0	82	350
5.0	100	88[b]

[a]Based on visual observations made in accordance with EPA Method 22.

[b]Not a valid observation since the light was less than 100 lux.

TABLE 4-22. VISIBLE EMISSION OBSERVATION DATA FOR REVERBERATORY FURNACE SLAG SKIMMING OPERATIONS AT THE PHELPS DODGE-MORENCI SMELTER

Reference Method 9 results		
Duration of observation period, min	Average opacity for observation period, min	Range of individual readings
30.00	0.00	-[a]
30.00	0.00	-[a]
33.00	2.72	0 to 5
6.25	11.00	5 to 30
27.00	0.00	-[b]
30.00	0.79	5 to 10

Reference Method 22 results		
Duration of observation period, min	Percent of time emissions observed	Light reading, lux
30.00	3	175

[a]No opacity readings above 0.0 were observed.

generated during matte tapping and the associated launder-to-ladle transfer operation. Visual observations indicate that a system of this type can consistently achieve a 90-percent capture efficiency.

Visual observations of slag skim bay hoods at both ASARCO-Tacoma and Phelps Dodge-Morenci indicate that local hooding can also be quite effective in capturing fugitive emissions generated at the skim bay. Subjective evaluations of both systems yielded approximate capture efficiencies of 90 percent. Although the hooding used to capture emissions at ASARCO's slag launder-to-ladle transfer points was observed to be ineffective, local hooding should not be dismissed as a viable capture scheme for emissions generated at slag launder-to-ladle transfer points. Similar hooding at the matte launder-to-ladle transfer points was judged to be effective, suggesting that a properly designed and operated local hooding system should operate effectively at slag launder-to-ladel transfer points. Thus, a 90-percent capture efficiency would be reasonable at such points.

4.7.7.2 Fugitive Emission Controls for the Converter Fixed Enclosure/Air Curtain Hood Capture System at the Tamano Smelter. Visible emission observations were made at the Tamano smelter in Japan for the fixed enclosure/ air curtain system operated on the No. 3 converter during day shifts on March 12 and March 13, 1980. The converter is of conventional Pierce-Smith design, measuring about 9 meters in length and 4 meters in diameter. Observations were made using EPA Method 22 and EPA Method 9, depending on whether the emissions observed were intermittently or continuously, for the different modes of converter operation comprising a converter cycle. Discussions of the results obtained during each mode of converter operation are presented in the following sections.

4.7.7.2.1 Visible emissions from matte charging. Usually three ladles of matte are brought to the converter and charged in a 10- to 30-minute period. Actual matte charging from each ladle lasts for 1 to 1½ minutes. The fixed enclosure doors and roof are opened, the air curtain system is turned on, and the ladle of matte is brought into the secondary hood by an overhead crane. The converter is rolled down

to an inclined position, the matte ladle is lifted up by the crane, and matte is charged into the converter. At the completion of matte charge, the ladle is moved out of the enclosure and, if needed, another ladle of matte is brought in. After the matte additions are completed, the converter is rotated into the primary converter hood, the roof and doors are closed, and slag blowing commences.

Three separate matte charges were observed using both EPA Methods 9 and 22 simultaneously, and one matte charge was observed using EPA Method 9 only. Visual observations for each matte charge observed were made only during the period when the matte was actually flowing into the converter. Results of the visual observations obtained are summarized in Table 4-23.[58]

As shown in Table 4-23, visible emissions were observed for three individual matte charges. The observations ranged from 44 to 77 percent of the time (EPA Method 22). Although somewhat continuous in nature, the opacity results indicate that these emissions were generally slight, typically ranging from 0 to 10 percent opacity, with the highest average opacity recorded for a single matte charge being 5 percent. When present, the emissions appeared as small puffs that penetrated the air curtain stream.

4.7.7.2.2 Visible emissions during slag and copper blowing. During slag blowing and copper blowing, the converter mouth is contained in the primary duct, and offgases are directed to the acid plant. The converter secondary hood doors and roof are closed, and the air curtain system is turned off. Fugitive emissions generated during blowing as a result of primary hood leaks are captured inside the converter housing and are vented to a baghouse for collection. The slag blow, which is divided into three segments, lasts for about 150 minutes per converter cycle and the copper blow for about 200 minutes per cycle.

Visible emissions observations were made using EPA Method 9 for the converter hood system for 30 minutes during the slag blow and for 27 minutes during the copper blow. No visible emissions (zero percent opacity) were observed at any time.

TABLE 4-23. VISIBLE EMISSION OBSERVATION DATA FOR CONVERTER SECONDARY HOOD SYSTEM DURING MATTE CHARGING AT THE TAMANO SMELTER[58]

	Method 22		Method 9		
Sample run	Observation period, min	Percent of time emissions observed	Observation period, min	Average opacity for observation period, percent	Range of individual readings
1	1.5	44	1.5	5.0	0 to 25
2	1.25	56	1.25	4.0	0 to 10
3	1.75	77	1.75	3.0	0 to 10
4	--	--	1.5	0	--
Total	4.50	60	6.25	2.8	0 to 25

4.7.7.2.3 Visible emissions during converter slag discharge. At the end of each of the three slag blow phases, slag is skimmed into a ladle and transported to a sand bed area for cooling. Because of the quantities involved, slag is discharged from the converter two times after the first slag blow and once after the second and third. Each slag skim lasts for about 10 minutes. During each skim, an empty ladle is brought into the enclosures by an overhead crane and placed on the ground in front of the converter. The crane is moved out, and the enclosure doors and roof are closed. The converter is rolled down and slag is poured into the ladle. After the slag skimming is completed, the converter is rotated upward slightly, the enclosure doors are opened, and the slag ladle is moved out.

Only two skims were observed. The first, which lasted 11 minutes, was observed using EPA Methods 22 and 9. The second slag skim, lasting 9 minutes, was observed using EPA Method 22 only. Each observation period began as the converter started rolling down to pour the slag into the ladle and lasted until the pouring was completed and the converter started rolling up. During the first slag skim observed, no visible emissions were observed at any time. In contrast, during the second slag skim, visible emissions were observed 100 percent of the time. The majority of time, however, these emissions were slight, ranging from 5 to 10 percent opacity and consisting of small puffs that escaped from the enclosure through a narrow opening between the front doors and the enclosure roof.[58]

4.7.7.2.4 Visible emissions during converter blister discharge. At the end of copper blow, blister copper is discharged into a ladle and transported to a refining furnace. Usually four ladles of blister are poured per converter cycle. Each of the first three blister pours lasts about 12 to 14 minutes, with one final blister pour lasting about 4 minutes. The time between each blister pour is about 8 to 15 minutes.

At the end of a copper blow, the secondary hood doors and roof are opened. An empty ladle is brought into the secondary hood by the overhead crane and placed in front of the converter. The crane is

moved out, and the secondary hood doors and roof are closed. The converter is rolled out, and blister is poured into the ladle. After the blister pour is completed, the converter is rolled in slightly, the hood doors are opened, the blister ladle is taken to the refining furnace by the crane, and the hood doors and roof are closed.

Four blister discharges were observed. Both EPA Methods 22 and 9 were used. A summary of the results obtained are presented in Table 4-24.[58] Although the observations periods used in obtaining the EPA Method 22 data were inconsistent (i.e., different start and end times), the results nonetheless indicate that visible emissions during blister discharge were generally continuous. The EPA Method 9 data, which were obtained only during periods when the blister copper was actually being poured, show that the visible emissions observed were somewhat more substantial than those observed during either matte charging or slag skimming. As shown in Table 4-24, the highest average opacity recorded for a single blister pour was 13 percent, with individual opacity readings ranging from 0 to 35 percent. Again, as with slag skimming, the emissions observed generally appeared above the narrow opening between the front doors of the enclosure and the enclosure roof.

4.7.8 Removal of Particulate Matter From Fugitive Gases

Currently, the building evacuation baghouse at ASARCO's El Paso facility and the calcine discharge baghouse at Phelps Dodge-Douglas are the only control devices for which emission data exist that control a gas stream composed only of fugitive gases. Gases from the converter building evacuation system at El Paso are routed to a fabric filter for particulate matter removal. The baghouse that receives the 16,800 Nm^3/min (600,000 scfm) of building evacuation gases contains 4,800 bags, each 15 cm (6 in) in diameter by 9 m (30 ft) long. It is sized with a nominal air-to-cloth ratio of 3 to 1 (cfm/ft^2). The baghouse consists of 12 compartments; however, only 10 are used at any given time. The total net cloth area is approximately 19,730 m^2 (212,400 ft^2). The baghouse was designed to treat 15,280 m^3/min (540,000 acfm) at 54° C (130° F). Mechanical shaking is used as the cleaning mechanism.

TABLE 4-24. VISIBLE EMISSION OBSERVATION DATA FOR BLISTER DISCHARGE AT THE TAMANO SMELTER[58]

	Method 22		Method 9		
Sample run	Observation period, min	Percent of time emissions observed	Observation period, min	Average opacity for observation period, percent	Range of individual opacity readings
1	25[a]	42	--	--	--
2	--	--	15.0	6.2	0 to 30
3	15[b]	86	12.0	13.0	0 to 35
4	6[c]	19	3.5	3.2	0 to 25
Total	15.3	49	30.5	8.5	0 to 35

[a]Observations started when secondary hood doors opened 12 minutes prior to the blister discharge, during which time the converter body was hit by a vibrating ram.

[b]Observations started with the blister discharge and continued for 3 minutes after completion of the blister discharge.

[c]Observations started with the blister discharge and continued for 2½ minutes after completion of the blister discharge.

TABLE 4-25. SUMMARY OF EMISSIONS TESTING PERFORMED ON THE CONVERTER BUILDING EVACUATION BAGHOUSE AT ASARCO-EL PASO[57 58]

Run no.	Grain loading, mg/Nm^3		Particulate mass rate, kg/h		Collection efficiency, %[a]
	Inlet	Outlet	Inlet	Outlet	
1	60.3	11.6	44.7	10.4	76.7[b]
2	53.3	2.5	46.3	0.92	98.0
3	70.5	1.1	61.2	6.4	99.3
Average	61.3	5.1	50.7	3.9	91.3

[a]Calculated based upon inlet and outlet particulate mass rates.

[b]This result is not considered typical of normal operation.

TABLE 4-26. SUMMARY OF EMISSIONS TESTING PERFORMED ON THE CALCINE DISCHARGE BAGHOUSE AT PHELPS DODGE-DOUGLAS

Run No.	Grain loading, mg/Nm^3		Particulate mass rate kg/h		Collection efficiency, percent[a]
	Inlet	Outlet	Inlet	Outlet	
1	4,040	7.1	211	0.37	99.7
2	6,740	112.1	348	1.92	99.5
3	6,150	--	346	--	--
Average	5,643	59.6	302	1.15	99.6

[a]Calculated based upon inlet and outlet particulate mass rates.

Emissions testing has been performed by EPA to determine the performance of this baghouse.[57] The results of these tests are summarized in Table 4-25. As indicated, the test results yield an average collection efficiency of 91.3 percent based upon the three test runs that were made. (See Appendix C for details.) It is evident, however, that Run 1 does not exemplify normal operation of this baghouse. Comparing the collection efficiencies estimated from Runs 2 and 3 with the efficiency estimated from Run 1 supports this conclusion. Consequently, for the purpose of determining the expected level of performance in such an application, only the data from Runs 2 and 3 are utilized, yielding an average collection efficiency of 98.7 percent. Because of the amount of dilution that occurs as the fugitive gases are being collected, no gas cooling is necessary prior to gas entry into the baghouse. Dilution also causes the inlet grain loading to be quite low, averaging 61.3 Mg/m^3 over the three test runs.

The baghouse that collects particulate matter from captured calcine discharge fugitive gases at the Phelps Dodge-Douglas smelter has also been tested by EPA. The results of these tests are summarized in Table 4-26. (See Appendix C for details.) As indicated, based upon the two completed test runs, the average collection efficiency was 99.6 percent. Consequently, a baghouse should be capable of achieving a 99.6 overall particulate matter collection efficiency in applications involving fugitive gases captured at the point of calcine discharge.

4.8 REFERENCES

1. U.S. Bureau of Mines Staff. Control of Sulfur Oxide Emissions in Copper, Lead, and Zinc Smelting. U.S. Bureau of Mines Information Circular 9527. Washington, D.C. May 1971.

2. Rinckhoff, J. B., and W. R. Parish. Double Catalysis Sulfuric Acid Plants for Copper Converter Gas. Presented at the 78th AICHE National Meeting. Salt Lake City, Utah, August 18-21, 1974, AICHE Paper 45-D, 9 p.

3. Rinckhoff, J. B. Sulfuric Acid Plants for Copper Converter Gas. In: Advances in Chemistry Series. Vol. 139. 1975. p. 48-59.

4. Background Information for New Source Performance Standards: Primary Copper, Lead, and Zinc Smelters, Volume I: Proposal Standards. U.S. Environmental Protection Agency. Research Triangle Park, N.C. Publication No. EPA 450/2-74-002a. October 1974.

5. Matthews, J. C., F. L. Bellegia, C. H. Gooding, and G. E. Weant. SO_2 Control Processes for Nonferrous Smelters. Research Triangle Institute. Research Triangle Park, N.C. Publication No. EPA-600/2-76-008. January 1976.

6. Weisenberg, I. J., T. Archer, F. M. Winkler, T. J. Browder, and A. Prem. Feasibility of Primary Copper Smelter Weak SO_2 Stream Control. Prepared for IERL, U.S. Environmental Protection Agency, Cincinnati, Ohio, under EPA Contract No. 68-03-2378. Publication No. EPA-600/2-80-152. July 1980.

7. Letter from Henderson, J. M., Consultant for ASARCO, Inc. to Clark, T. C., Research Triangle Institute, August 4, 1982. Clarification of comments on Chapters 3-6 of the BID.

8. Friedman, L. J. Production of Liquid SO_2, Sulfur, and Sulfuric Acid from High Strength SO_2 Gases. In: Sulfur Dioxide Control in Pyrometallurgy, T. D. Chatwin and K. Kikumoto (eds.). The Metallurgical Society of AIME, Warrendale, Pennsylvania. 1981. p. 205-20.

9. Burckle, John O., and Christian A. Worrel. Comparison of Environmental Aspects of Selected Nonferrous Metals Production Technologies. (Presented at AIME Annual Meeting. Chicago. February 22-26, 1981.)

10. Letter from Wood, J. P. Research Triangle Institute, to Shafer, J., Monsanto Enviro-Chem Systems, Inc., St. Louis, MO. July 1, 1981. Emission guarantees for acid plants.

11. Davenport, W. G. Copper Smelting to the Year 2000. CIM Bulletin. 73(813):152-158. January 1980.

12. Donovan, J. R., and P. J. Stuber. Sulfuric Acid Production from Ore Roaster Gases. Journal of Metals. November 1967. p. 45-50.

13. Porter, F. L., and G. H. Wood. Analysis of Continuous SO_2 Monitor Data for the Kennecott Copper Smelter at Garfield, Utah, and the Determination of an Upper Limit for Sulfuric Acid Plant Catalyst Deterioration. U.S. Environmental Protection Agency. Research Triangle Park, N.C. April 18, 1973.

14. Monsanto Enviro-Chem Systems, Inc., Brochure No. 78-MON-7254. Mist Eliminators. 1978.

15. Letter and attachments from Billings, C. H., Arizona Dept. of Health Services, to Wood, J. P., Research Triangle Institute. May 12, 1982. p. 2. Response to letter requesting current information on Duval scrubbing system.

16. Kohno, H., and Y. Sugawara. SO_2 Pollution Control with the Lime-Gypsum Process at the Onahama Smelter. In: Sulfur Dioxide Control in Pyrometallurgy, T. D. Chatwin and K. Kikumoto (eds.). The Metallurgical Society of AIME, Warrendale, Pennsylvania. 1981. p. 103-119.

17. Sulfur Oxide Removal from Power Plant Stack Gases: Use of Limestone in Wet Scrubbing Processes. Prepared for the National Air Pollution Control Administration by the Tennessee Valley Authority. NTIS No. PB 183908. 1969.

18. Slack, A. V. Application of Flue Gas Desulfurization in the Non-Ferrous Metals Industry. In: Sulfur Dioxide Control in Pyrometallurgy, T. D. Chatwin and K. Kikumoto (eds.). The Metallurgical Society of AIME, Warrendale, Pennsylvania. 1981. p. 91-101.

19. Background Information for New Source Performance Standards: Electric Utility Steam Generating Units, Background Information for Proposed SO_2 Emission Standards. U.S. Environmental Protection Agency. Research Triangle Park, N.C. Publication No. EPA 450/2-78-007a. July 1978.

20. Argenbright, L. P. Smelter Pollution Control--Facts and Problems. Mining Congress Journal. 57(5):24-28. May 1971.

21. Economic and Design Factors for Flue Gas Desulfurization Technology. Prepared for the Electric Power Research Institute by Bechtel National, Inc. Publication No. EPRI CS-1428. April 1980.

22. Friedman, L. J. Analysis of Modern Sodium and Ammonia Based SO_x Scrubbing Systems. In: Sulfur Dioxide Control in Pyrometallurgy, T. D. Chatwin and K. Kikumoto (eds.). The Metallurgical Society of AIME, Warrendale, Pennsylvania. 1981. p. 189-203.

23. Sulfur Oxide Removal from Power Plant Stack Gases: Ammonia Scrubbing. Prepared for the National Air Pollution Control Administration by the Tennessee Valley Authority. NTIS No. PB 196804. 1970.

24. Maxwell, M. A., and G. R. Koehler. The Magnesia Slurry SO_2 Recovery Process Operating Experience With a Large Prototype System. (Presented at the 65th AICHE Annual Meeting. New York. November 26-30, 1972.) 36 p.

25. Weisenberg, I. J., A Prem, and F. Winkler. Primary Copper Smelter Reverberatory Furnace SO_2 Control. (Presented at the 71st Annual APCA Meeting. Houston. June 25-30, 1978.) 16 p.

26. K. Itakuma, H. Ikeda, and M. Goto. Double Expansion of the Onahama Smelter and Refinery. The Metallurgical Society of AIME. Warrendale, Pennsylvania. TMS Paper No. A74-11. 1974.

27. Niimura, M., T. Konada, and R. Kojima. Sulfur Recovery from Green-Charged Reverberatory Offgas at the Onahama Copper Smelter. Met. Society of AIME Paper No. A73-47. 1973. 26 p.

28. Petersson, S. A. The Production of Sulphuric Acid and Liquid Sulfur Dioxide at the Ronnskar Works of Boliden Aktiebolag, Skelleftehanm, Sweden. (Presented at the AIME Environmental Control Process Symposium. 1972.)

29. Weisenberg, I. J., and R. C. Hill. Design, Operating, and Emission Data for Existing Primary Copper Smelters (Draft). Pacific Environmental Services. Santa Monica, California. EPA Contract No. 68-02-2606. March 1978.

30. Letter and attachments from Henderson, J. M., ASARCO, to Goodwin, D. R., U.S. Environmental Protection Agency. January 11, 1982. Response to Section 114 letter on primary copper smelters. p. 15.

31. Weisenberg, I. J., and J. C. Serne. Design and Operating Parameters for Emission Control Studies: Phelps Dodge, Morenci Copper Smelter. U.S. Environmental Protection Agency. Research Triangle Park, N.C. Publication No. EPA-600/2-76-036g. February 1976. 20 p.

32. Reference 30, p. 31.

33. Goto, M. Green Charge Reverberatory Furnace Practice at Onahoma Smelter. In: Extractive Metallurgy of Copper. J. C. Yannopoulos and J. C. Agarwal (eds.). Port City Press, Baltimore, Maryland. 1976. p. 154-67.

34. Saddington, R., W. Curlock, and P. Queneau. Tonnage Oxygen for Nickel and Copper Smelting at Copper Cliff. Journal of Metals. 18(4): 440-452. April 1966.

35. Itakura, K., H. Ikeda and M. Goto. Double Expansion of Onahoma Smelter and Refinery. TMS Paper No. A74-11. Metallurgical Society of AIME. Warrendale, Pennsylvania. 1974.

36. Eastwood, W. B., J. S. Thixton, and T. M. Young. Recent Developments in the Smelting Practice of Nchanga Consolidated Copper Mines, Rokana Smelter. TMS Paper No. A71-75. Metallurgical Society of AIME. 1971. 32 p.

37. Pluzhnikov, A. I., et al. The Possibility of Using Roof Firing Reverberatory Furnaces. Tsvetnye Metally. 12(10). UDC 669.332.2. October 1971. p. 7-11.

38. Kupryakov, Y. P., et al. Operation of Reverberatory Furnaces on Air-Oxygen Blasts. Tsvetyne Metally, July 1972.

39. Wrampe, P., and E. C. Nollman. Oxygen Utilization in the Copper Reverberatory Furnace: Theory and Practice. TMS Paper No. A74-25B. Metallurgical Society of AIME. 1974. 18 p.

40. Beals, G. C., J. Kocherhans, and K. M. Ogilvie. Reverberatory Matte Smelting Process, U.S. Patent Office, Patent No. 3,222,162, December 7, 1965.

41. Achurra, J. H., R. G. Espinosa, and L. J. Torres. Improvements in Full Use of Oxygen in Reverberatory Furnaces at Caletones Smelter. TMS Paper No. A77-91. Metallurgical Society of AIME. 1977. 16 p.

42. Schwarze, H. O., G. B. Vera, and F. O. Pino. Use of New Technologies at Caletones Smelter. TMS Paper No. A77-90. Metallurgical Society of AIME. 1977.

43. Niimura, M., T. Konado, and R. Kojima. Control of Emissions at Onahama Copper Smelter. Onahama Smelting and Refining Co. (Presented at Joint Meeting of MMIJ-AIME. Tokyo, Japan. 1972.) 14 p.

44. Blanco, J. A., T. N. Antonioni, C. A. Landolt, and G. J. Danyliw. Oxy-Fuel Smelting in Reverberatory Furnaces at Inco's Copper Cliff Smelter. Inco Metals Company, Copper Cliff, Ontario. (Presented at the 50th Congress of the Chilean Instititue of Mining and Metallurgical Engineers. Santiago. November 23-29, 1980. 16 p.

45. Biswas, A. K., and W. G. Davenport. Extractive Metallurgy of Copper. Oxford, England, Pergamon Press, 1980.

46. Queneau, P. E. Copper Making in the Eighties--Productivity in Metal Extracting from Sulfide Concentrates. Journal of Metals. 33(2): February 1981.

47. Queneau, P. E., and R. Schuhmann. Metamorphosis of the Copper Reverberatory Furnace: Oxygen Sprinkle Smelting. Journal of Metals. 31(12):12-15. December 1979.

48. Trip Report. Weisenberg, I. J., Del Green Associates, with Garven, H.C., and T. N. Antonioni, Inco Metals Company. July 20, 1981. Oxygen enrichment in a calcine charged reverberatory furnace at the Inco Copper Cliff Smelter.

49. Successful Tests Encourage Phelps Dodge to Modify its Copper Smelter. Chemical Engineering. 89(3):18-19. February 8, 1982.

50. Telecon. Clark, T. C., Research Triangle Institute, with G arven, H. C., Inco Metals Company. July 6, 1982. Response to questions on oxy-fuel smelting and Inco oxygen flash smelting.

51. Telecon. Clark, T. C., Research Triangle Institute, with Garven, H. C., Inco Metals Company. July 9, 1982. Matte grade considerations with oxy-fuel smelting.

52. Nichols, G. B., J. P. McCain, J. E. McCormack, and W. B. Smith. Evaluation of an Electrostatic Precipitator for Control of Emissions from a Copper Smelter Reverberatory Furnace. Prepared for IERL, U.S. Environmental Protection Agency, Cincinnati, Ohio, under EPA Contract No. R804762. Publication No. EPA-600/2-80-151. June 1980.

53. Environmental Protection Agency. Response to Petitions for Reconsideration and Revision of the Process Weight Regulation [40 CFR 52.126(b)] filed by the Phelps Dodge Corporation and Magma Copper Company in October and November 1975. Prepared by the U.S. EPA, Region IX Enforcement Division, San Francisco, California. September 1978.

54. Wark, K., and C. F. Warner. Air Pollution; Its Origin and Control. 2nd Ed. New York. Harper and Rowe. 1981. p. 341-351.

55. Bowerman, L. J. Particulate Matter Emissions From Selected Arizona Copper Smelters. (Presented at the APCA Annual Meeting. Houston. June 25-30, 1978.)

56. Wet Scrubber System Study. Vol. 1, Scrubber Handbook. Prepared for the U.S. Environmental Protection Agency by ATP, Inc. July 1972.

57. TRW Environmental Engineering Division. Emission Testing of ASARCO Copper Smelter, El Paso, Texas. U.S. Environmental Protection Agency, Research Triangle Park, North Carolina. EMB Report 78-CUS-7. April 1978. 150 p.

58. Arsenic Emissions from Primary Copper Smelters--Background Information for Proposed Standards (Draft). U.S. Environmental Protection Agency. Research Triangle Park, N.C. November 1980.

59. Trip Report. B. H. Carpenter, T. C. Clark, and J. P. Wood, Research Triangle Institute. J. Richardson, ASARCO-El Paso. February 16, 1981. Familiarization Visit.

60. Trip Report. B. H. Carpenter, T. C. Clark, and J. P. Wood, Research Triangle Institute. P. Bhargava, Arizona Bureau of Air Quality Control. W. Cummins, C. Guptill, and W. Marczeski, ASARCO-Hayden. February 20, 1981. Familiarization Visit.

61. Batroun, V. V. Fundamentals of Industrial Ventilation. Translated by O. M. Blunn. Pergamon Press. Third Edition. 1972.

62. Grassmuck, G. Applicability of Air Curtains as Air Stopping and Flow Regulators in Mini Ventilation. C.I.M. Bulletin. No. 691. 62:1175-1185. November 1969.

63. Powlesland, J. W. Air Curtains in Controlled Energy Flows--To Stop or Regulate Air Flows--To Contain and Convey Airborne Contaminants. Presented at the 22nd Annual Industrial Ventilation Conference. February 1973.

64. ASARCO Design Report. Converter Secondary Hooding for the Tacoma Plant. Prepared by ASARCO Central Engineering Dept., Salt Lake City, UT. January 22, 1981.

65. Trip Report. B. H. Carpenter and J. P. Wood, Research Triangle Institute. ASARCO, Salt Lake City, Utah, May 5, 1981. Familiarization visit notes for discussion at ASARCO's Central Engineering Department, Salt Lake City.

5. MODIFICATION AND RECONSTRUCTION

Under the authority of Section 111 of the Clean Air Act of 1970, the new source performance standards (NSPS) are applicable to newly constructed facilities and to existing facilities that have undergone modification or reconstruction. A facility to which the standards apply is termed an affected facility. An existing facility is one of the type for which standards have been promulgated and for which the construction or modification was begun prior to the proposal date of the applicable standards.

The criteria used to identify modifications and reconstructions are summarized in the Code of Federal Regulations (40 CFR 60), U.S. Environmental Protection Agency (EPA) Standards of Performance for New Stationary Sources, under Subpart A, "General Provisions," Sections 60.14 and 60.15.

5.1 SUMMARY OF 40 CFR 60 PROVISIONS FOR MODIFICATION AND RECONSTRUCTION

5.1.1 Modification

A modification is defined to be, with certain exceptions, "any physical or operational change to an existing facility which results in an increase in the emission rate to the atmosphere of any pollutants to which a standard applies." However, a facility that undergoes such a change is considered to be modified only if the cost of the change as a percentage of the original facility cost is greater than the annual guideline repair allowance percentage specified in the latest edition of Internal Revenue Service Publication 534. Merely increasing production to a higher level when adequate capacity exists is not considered a modification. Other items that are not considered as modifications include (1) maintenance, repair, or replacement that is judged by the Administrator to be routine; (2) an increase in the

hours of operation; (3) use of an alternative fuel or raw material if, prior to the standard, the existing facility was designed to accommodate that alternative use; and (4) the addition or use of any system or control device whose primary function is the reduction of air pollutants, except when an emission control system is removed or replaced by a system considered to be less efficient.

5.1.2 Reconstruction

While a modification refers to relatively minor changes to an existing facility, major changes are deemed reconstructions. Upon reconstruction, an existing facility becomes a new source, irrespective of any change in emission rate. Generally, a reconstruction occurs when components of an existing facility are replaced to such an extent that the fixed capital cost of the new components exceeds 50 percent of the fixed capital cost that would be required to construct a comparable entirely new facility, and it is economically and technically feasible to comply with the applicable standards.

The Administrator provides the final judgment that indicates whether a replacement constitutes a reconstruction and if it is technologically and economically feasible to comply with the applicable standards. The Administrator's final determination will be based upon (1) a comparison of the fixed capital costs of the replacement components with the costs of a comparable new source; (2) the estimated life of the source after the replacements compared to the life of a comparable entirely new source; (3) the extent to which the components being replaced cause or contribute to the emissions from the source; and (4) any economic or technical limitations on compliance with applicable performance standards which are inherent in the proposed replacements.

The purpose of the reconstruction provision is to ensure that an owner or operator does not perpetuate an existing source by replacing all but vestigial components, support structures, frames, and housing rather than totally replacing the source in order to avoid being subject to applicable new source standards.

5.2 APPLICABILITY TO PRIMARY COPPER SMELTERS

5.2.1 General

Most of the changes to existing primary copper smelting facilities that could be considered as possible modifications relate to increasing production capacity. These changes are discussed under modifications.

Changes that would qualify as reconstructions are expected to be relatively few. Major activities that might be considered as reconstruction include rebuilding/relining of affected facilities such as roasters, smelting furnaces, and converters. Rebuilding is an inherent consequence of extracting copper by existing methods and is practiced on a routine, though relatively infrequent, basis. Major reverberatory furnace rebuilds, for example, have been reported as occurring every 5 to 8 years[1] and every 20 years.[2] Converter relining, either partial or complete, typically occurs one to three times per year.[3] Other activities that might be considered reconstructions include physical expansions of existing process equipment. These changes are discussed in succeeding paragraphs.

5.2.2 Modifications

Various options that have been employed by the industry to increase or expand production capacity are discussed here and are described in greater detail in Section 3.4. Most of these options cause an increase in particulate and SO_2 emissions proportional to the increased production. A notable exception is the conversion from green- to calcine-charged furnace operation. In this case SO_2 emissions will not necessarily increase because some sulfur removal occurs in the newly installed roaster.

5.2.2.1 Multihearth Roasters. As discussed in Section 3.4.1, increasing the shaft rotation speed has been used as a means of increasing the throughput rate of multihearth roasters by over 100 percent.[4] However, most domestic smelters use the shaft rotation speed as a means of altering residence time in order to control the degree of sulfur elimination.[5] Because these units are designed for such operation, increasing shaft rotation speed to gain increased throughput would not be considered a modification.

Physical expansion of multihearth roasters is not considered feasible because of the geometry of these units.

5.2.2.2 Fluid-Bed Roasters. Fluid-bed roasters can potentially expand capacity by increasing blower capacity or by oxygen enrichment of the fluidizing air. Increasing the blower capacity may be unfeasible because of constraints associated with existing calcine recovery systems[6] (see Section 3.4.2). As a result, this potential modification is considered unlikely. Oxygen enrichment of the fluidizing air could possibly be used to increase roaster throughput by 20 to 25 percent.[6] However, some melting of the feed may result, which would lead to operational problems (see Section 3.4.2). Therefore, this expansion option is also considered unlikely.

It should be noted that the cost of an oxygen plant, if constructed, would not be included in the determination of possible modification because it is not a part of the affected facility.

5.2.2.3 Reverberatory Furnaces. Five different methods of increasing reverberatory furnace production capacity are described in Section 3.4.3. These methods are (1) conversion from green- to calcine-charging, (2) addition of concentrate dryers, (3) physical expansion of the furnace, (4) elimination of converter slag return, and (5) oxygen enhancement techniques.

5.2.2.3.1 Conversion from green to calcine charging. Reverberatory furnace capacity has been increased by up to 50 percent with the conversion from green- to calcine-charged operation.[7] Alterations to the furnace would likely include the installation of water-cooled panels around the furnace perimeter and changes to the feed system.[8] Emissions of SO_2 from the altered furnace would not necessarily increase, depending upon the extent of sulfur removal in the new roaster. Particulate emissions from the expanded furnace should increase at least in proportion to the increase in throughput achieved.

5.2.2.3.2 Addition of concentrate dryers. Capacity increases of 13 percent are feasible for green-charged reverberatory furnaces that install concentrate dryers.[9] Emissions of SO_2 and particulates should increase approximately in proportion to the increase in capacity achieved.

In contrast to the conversion from green to calcine charging, no changes would be anticipated at the furnace proper in order to process the dried feed.[9] Hence, this expansion option is not foreseen to be a modification.

5.2.2.3.3 Physical expansion of the furnace. Furnace capacity has been increased by 20 percent in the past by physical expansion.[10] Emissions of SO_2 and particulates should increase in proportion to the expansion obtained. Costs associated with physical expansion may be sufficiently great to qualify it as a reconstruction. Other problems, such as a substantial down-time requirement and possible physical space limitations, may preclude the use of this option at some smelters. Hence, physical expansion of reverberatory furnaces is considered an unlikely expansion option.

5.2.2.3.4 Elimination of converter slag return. Processing converter slag in separate facilities (e.g., flotation plants) rather than returning it to the reverberatory furnace has been reported to increase furnace capacity by up to 25 percent.[11] Emissions of SO_2 and particulates should increase in proportion to the increase in capacity achieved. Changes to the furnace proper, if any, would be expected to be minimal. Hence, this expansion option is not foreseen as a modification.

5.2.2.3.5 Oxygen enchancement techniques. Reverberatory furnace expansion options involving the use of oxygen are as follows: (1) the enrichment with oxygen of the combustion air fed to existing burners, (2) the injection of oxygen or oxygen-enriched air into the furnace through lances positioned beneath the existing burners, (3) the addition of roof-mounted oxy-fuel burners, (4) oxygen lancing through the roof, or (5) the addition of roof-mounted oxy-sprinkle burners. These options are discussed in detail in Section 3.4.3.5.2.

The technique of oxygen enrichment of the combustion air has produced increases of up to 56 percent in furnace production capacity.[12] Particulate and SO_2 emissions should increase approximately in proportion to the increase in production. Costs inherent with this scheme would be those associated with instrumentation and control for the

system. It should be noted that, if an oxygen plant were required, its construction cost would not be included for the determination of possible modification because it is not part of the affected facility. This statement also pertains to the other oxygen enhancement schemes described below.

The injection of oxygen into the furnace through separate ports or lances beneath the existing burners--undershooting--has produced a 36-percent increase in throughput with a calcine-charged furnace[13] and a 45-percent increase in throughput for a green-charged operation.[12] Particulate and SO_2 emissions should increase approximately in proportion to the increase in furnace production. Costs inherent with this scheme would be those associated with the lances and their instrumentation/ control.

Large increases in capacity have been reported with oxy-fuel burners installed in the furnace roof. In the case of green-charged furnaces, production increases of more than 100 percent have been reported,[14] and a 45-percent increase in furnace capacity has been reported for a calcine-charged furnace.[15] The costs associated with this scheme are expected to be those associated with the burners and their instrumentation/control. Particulate and SO_2 emissions should increase approximately in proportion to increases in production.

Production increases of 20 percent have been reported with the use of roof-mounted oxygen lances.[14] The costs inherent with this scheme would be those associated with the lances and their instrumentation/control. Particulate and SO_2 emissions should increase approximately in proportion to increases in production.

The oxy-sprinkle process is an option that could be adopted by the industry, although it is still in the development stage. Testing of oxy-sprinkle burners on a reverberatory furnace is currently being performed, and production increases of 100 percent have been reported.[16] This scheme differs from the other techniques in that it is based on the principle of flash furnace operation. Because considerable sulfur in the feed is combusted, SO_2 emissions would be expected to increase somewhat more than linearly with the increase in production achieved.

Because of the nature of charging, particulate emissions would be expected to increase somewhat more than in proportion to the increase in capacity. Costs associated with this scheme would include, in addition to burner and instrumentation/control costs, the costs of additional feed handling equipment.

5.2.2.4 Electric Furnaces. Electric furnaces can increase capacity by converting from green to calcine charging and by eliminating converter slag return. Other conceivable expansion options include installing a larger transformer and physically expanding the furnace. Additional discussion on each of these options is provided in Section 3.4.4.

As in the case of reverberatory furnaces, green-charged electric furnaces may also expand capacity through the conversion to calcine charging, because less time is required to smelt hot, roasted calcine than dried concentrates. Production increases of 40 percent are believed to be achievable. Costs associated with making the conversion on electric furnaces are believed to be lower than those for reverberatory furnaces because side-wall cooling and extensive feed system changes would probably not be required. SO_2 emissions from the expanded furnace throughput would not necessarily increase, depending upon the extent of sulfur removal in the roaster. Particulate emissions should increase in proportion to the increase in capacity.

Based on experience achieved with reverberatory furnaces, production increases of 25 percent are believed to be achievable when converter slag is processed in other facilities rather than returned to the electric furnace. Emissions of SO_2 and particulates should increase in proportion to the increased capacity achieved. Changes required at the furnace proper appear to be minimal; hence, this expansion option is not foreseen as a modificiation.

Electric furnaces can conceivably increase capacity by installing a larger transformer to increase smelting rate by increasing power input. Emissions of SO_2 and particulates should increase in proportion to the increase in capacity achieved. However, this potential modification would cause increased refractory wear[17] and is considered unlikely.

Physical expansion of an electric furnace is a conceivable option but would require extensive changes to the furnace proper. In addition to enlarging the furnace, a larger transformer and electrodes would be required.[17] Costs may be sufficiently great to qualify as a reconstruction. Emissions of SO_2 and particulates should increase in proportion to the increase in capacity. Because substantial changes would be required, this expansion option is considered unlikely.

5.2.2.5 Outokumpu Flash Furnaces. As discussed in Section 3.4.5, the primary expansion mode for Outokumpu flash furnaces is via oxygen enrichment of the combustion air. Increases of 60 to 70 percent have been reported.[18] Emissions of SO_2 should increase in proportion to the increased capacity achieved. Particulate emissions should increase somewhat less than proportionately with the expansion because of the lower offgas volume per unit of charge afforded by oxygen enrichment. As discussed previously, oxygen plant costs would not be included in the determination of possible modification.

Physical expansion is not considered to be a feasible expansion option because of furnace geometry.[19] The elimination of converter slag return is not an available option for increasing capacity because converter slag is not returned directly to the furnace in present operating design.

5.2.2.6. Noranda Reactors. As discussed in Section 3.4.6, the primary expansion mode for Noranda reactors is via oxygen enrichment of the blowing air.[20] Emissions of SO_2 and particulates should increase approximately in proportion with the increase in capacity.

Other conceivable expansion modes for Noranda reactors include increasing the blowing rate via the installation of a larger blower, and physically expanding the vessel coupled with increasing the number of tuyeres. Emissions of SO_2 and particulates should increase approximately in proportion to increases in capacity achieved using either of these schemes. However, because of offgas handling constraints and--with respect to physical expansion only--physical space limitations and downtime requirements, neither scheme is considered likely.

5.2.2.7 Converters. Converter capacity can be increased by physical changes to the vessel. Other conceivable expansion modes

include increasing blower capacity and oxygen enrichment. All of these options are discussed in further detail in Section 3.4.7.

Increases in converter capacity by approximately 13 percent have been attained by physical expansion coupled with increasing the number of tuyeres.[21] Emissions of SO_2 and particulates should increase in proportion to the increase in capacity achieved.

Converter throughput can potentially be increased by increasing the size of the blower. Emissions of SO_2 and particulates should increase in proportion to the increase in blowing rate. However, excessive ejection of molten material from the vessel may occur, and this expansion option is considered unlikely.

Oxygen enrichment of converter blowing air may increase converter capacity, although any increase may be offset by interruptions in the cycle arising from the need of additional "cold dope" materials.

5.3 REFERENCES

1. Telecon. Clark, T. C., Research Triangle Institute, with Johnson, R. E., Phelps Dodge Corportion. August 7, 1981. Industry expansion options.

2. Discussion. Clark, T. C., Research Triangle Institute, with Parker, D. J., ASARCO, Inc. October 1, 1981. Reconstructions of process equipment.

3. Johnson, R. E., N. J. Themelis, and G. A. Eltringham. A Survey of Worldwide Copper Converter Practices. In: Copper and Nickel Converters, Johnson, R. E. (ed.). New York, American Institute of Mining, Metallurgical, and Petroleum Engineers. 1979. p. 1-32.

4. Boggs, W. B., and J. N. Anderson. The Noranda Smelter. American Institute of Mining, Metallurgical, and Petroleum Engineers Transactions, Vol. 106, 1933. pp. 187-188.

5. Letter and attachments from Henderson, J. M., ASARCO, to Goodwin, D. R., U.S. Environmental Protection Agency, January 11, 1982. Response to Section 114 letter on primary copper smelters. p. 21.

6. Telecon. Clark, T. C., Research Triangle Institute, with Lee, L. V., Dorr-Oliver, Inc. December 18, 1981. Increasing fluid-bed roaster capacity.

7. Mulholland, L. E., and D. J. Nelson. Operation of the Fluo-Solids Roaster at Kennecott's Ray Mines Division. In: Copper Metallurgy, Erlich, R. P. (ed.). New York, The Metallurgical Society of AIME. 1970. pp. 141-145.

8. Telecon. Clark, T. C., Research Triangle Institute, with Johnson, R. E., Phelps Dodge Corporation. August 7, 1981. Industry Expansion Options.

9. Telecon. Clark, T. C., Research Triangle Institute, with Malone, R. A., Kennecott Minerals Company. August 11, 1982. Proposed use of a concentrate dryer at the McGill smelter.

10. Reference 5, p. 8.

11. Itakura, K., T. Nagano, and J. Sasakura. Converter Slag Flotation--Its Effect on Copper Reverberatory Smelting Process. Journal of Metals. (Vol.):30-34. July 1969.

12. Kupryakov, Y. P., et al. Operation of Reverberatory Furnaces on Air-Oxygen Blasts. Tsvetnye Metally. July 1972. (Vol. ___), p. 13-16.

13. Saddington, R., W. Curlook, and P. Queneau. Tonnage Oxygen for Nickel and Copper Smelting at Copper Cliff. Journal of Metals, April 1966. p. 445.

14. Achurra H., J., R. Espinosa G., and L. Torres J. Improvements in Full Use of Oxygen in Reverb Furnaces at Caletones Smelter. The Metallurgical Society of A.I.M.E., Paper number A77-91, 1977.

15. Blanco, J. A., T. N. Antonioni, C. A. Landolt, and G. J. Danyliw. Oxy-Fuel Smelting in Reverberatory Furnaces at Inco's Copper Cliff Smelter. 50th Congress of the Chilean Institute of Mining and Metallurgical Engineers, Santiago, Chile. November 1980.

16. Successful Tests Encourage Phelps Dodge to Modify its Copper Smelter. Chemical Engineering. 89(3):18-19. February 8, 1982.

17. Telecon. Clark, T. C., Research Triangle Institute, with Persson, J. A., Lectromelt Corporation. August 10, 1981. Increasing Electric Furnace Capacity.

18. Juusela, J., S. Harkki, and B. Andersson. Outokumpu Flash Smelting and Its Energy Requirement. Effic. Use Fuels Metall. Ind. Symp. Pap., Inst. Gas Technol., Chicago. 1974. pp. 555-575.

19. Trip Report. Carpenter, B. H., J. Wood, and C. Clark, Research Triangle Institute, with Shaw, M. F., and A. S. Gillespie, Phelps Dodge Corporation Hidalgo Smelter. February 17, 1981. Familiarization plant visit.

20. Telecon. Clark, T. C., Research Triangle Institute, with Weddick, A. J., Kennecott Copper Corporation. August 19, 1981. Noranda Reactors.

21. Reference 5, p. 3.

6. MODEL PLANTS AND ALTERNATE CONTROL TECHNOLOGIES

6.1 INTRODUCTION

This study focuses on three principal issues:

- The possible deletion of the existing exemption of new or modified reverberatory furnaces from the new source performance standard (NSPS) when the smelter processes a high-impurity charge.
- The possible establishment of emission standards for fugitive emission sources at primary copper smelters.
- The effect of the NSPS on future capacity additions or expansions at existing smelters.

In considering the deletion of the existing exemption, candidate demonstrated technologies for the control of weak SO_2 process gases from reverberatory furnaces are evaluated for their environmental, cost, economic, and energy effects. A model plant representative of a new "greenfield" smelter capable of processing high-impurity materials is used for the analysis. Baseline conditions are the current NSPS. The candidate technologies and model plant parameters are discussed in Section 6.2.

Candidate demonstrated technologies for the control of fugitive emissions from selected sources are also analyzed for their environmental, cost, economic, and energy effects on new "greenfield" smelters and modified or reconstructed existing facilities. Fugitive emission sources selected for control are described in Section 6.3, along with candidate technologies and model plants. Baseline conditions for these sources are identified.

Expansion options available for each existing smelting configuration are identified along with alternative control technologies capable

of reducing emissions from expanded facilities to preexpansion levels. Cumulative costs for the expansion are estimated, including the cost associated with the physical or operational process change(s) resulting in the capacity increase and the cost of added control to achieve preexpansion emission levels, and a determination is made of whether or not the total cost for a particular expansion scenario is prohibitive. Model plants representative of existing U.S. smelters are developed. Baseline conditions for these models reflect existing control levels. Expansion options and alternative control technologies are discussed in Section 6.4, along with the model plants selected as representative of existing smelters. Procedures used in developing model plant parameters are described in Appendix J.

6.2 REVERBERATORY FURNACE EXEMPTION

Under the existing NSPS,[1] new, modified, or reconstructed reverberatory smelting furnaces are exempt from SO_2 control when the total smelter charge contains more than 0.2 weight percent arsenic, 0.1 weight percent antimony, 4.5 weight percent lead, or 5.5 weight percent zinc. Total smelter charge includes all copper sulfide ore concentrates plus all other solid materials introduced into the roasters and smelting furnaces except calcine. Smelter charges containing a higher percentage than that specified for one or more of the four impurities cited in the exemption are high-impurity charges. When the existing standard of performance was promulgated, the cost for controlling the weak SO_2 gases discharged from a reverberatory furnace directly with either a sulfuric acid plant or then-available flue gas scrubbers was concluded to be exorbitant. The U.S. Environmental Protection Agency (EPA) stated at that time that it would continue to investigate means of controlling SO_2 emissions from reverberatory furnaces, including the use of oxygen enhancement of the furnace combustion air and the blending of gases from reverberatory furnaces with those from multihearth roasters and converters as a means of producing a gas stream suitable for SO_2 control at reasonable cost. An additional issue requiring investigation is the need for a particulate standard for reverberatory furnaces in the event that the SO_2 control exemption for smelters that process high-impurity feeds is not deleted.

A model smelter representative of a new "greenfield" smelter capable of processing high-impurity materials to be used in this study is shown in Figure 6-1. The model is sized at a capacity of 1,364 Mg/day (1,500 tons/day) of dry metal-bearing material, which is equivalent to 312 Mg/day (343 tons/day) of blister copper. This capacity is considered to be representative of the smallest smelter that is likely to be built today and is essentially equivalent to the median capacity of existing domestic primary copper smelters. Procedures for determining model plant parameters are described below. Example calculations are shown in Appendix J.

As shown in Figure 6-1, the baseline case model smelter consists of five multihearth roasters, one reverberatory smelting furnace, and four conventional Pierce-Smith converters. The combination of multihearth roasters and a reverberatory furnace is considered necessary by the industry for processing materials containing a high level of volatile impurities. In accordance with existing standards of performance, gases discharged from the multihearth roasters and converters are treated in a double contact/double absorption (DC/DA) sulfuric acid plant for SO_2 removal. Gases discharged from the reverberatory furnace are treated in a hotside electrostatic precipitator (ESP) (not shown) and subsequently are discharged to the atmosphere without SO_2 control. Fugitive emissions, produced by calcine discharge operations, matte and slag tapping, and converter operations, are captured but not controlled (not shown in Figure 6-1). Captured fugitive emissions are assumed to be discharged to the atmosphere through a 100-meter stack.

The charge composition assumed for the model plant is shown in Table 6-1. The weight percent presented for each charge component listed is based on the average smelter charge processed at ASARCO's Tacoma smelter in 1979.[2] Also shown in Table 6-1 are values assumed for the sulfur elimination achieved during roasting, smelting, and converting at the model plant. The degree of sulfur elimination achieved during converting (52 percent) was computed based on the following assumptions:

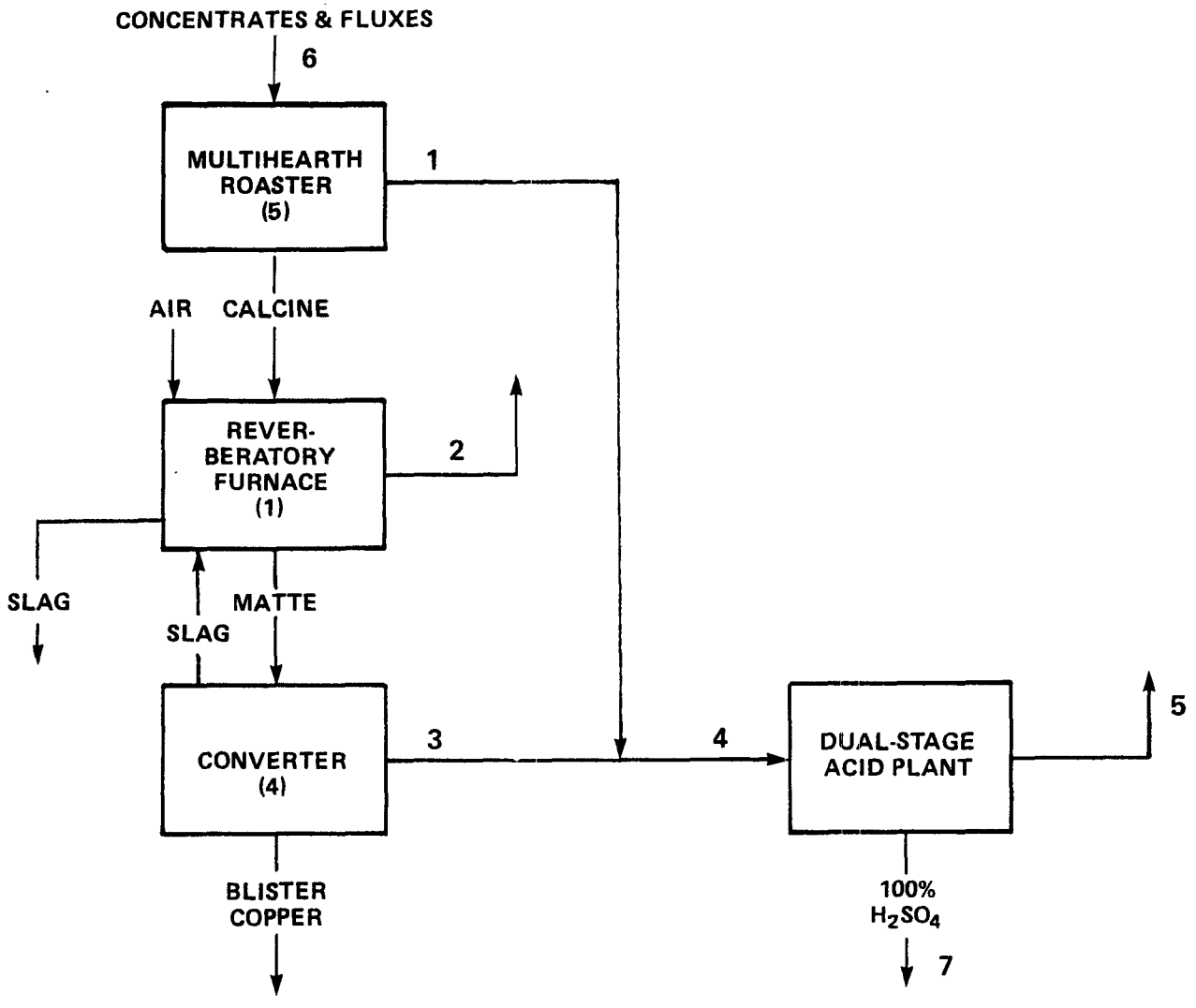

	Hours/day	Nm^3/min (scfm)	SO_2 (%)	O_2 (%)	Mg/day (tons/day)
1	24.0	830 (29,200)	4.5	16.5	
2	24.0	3,315 (117,000)	1.7	11.9	
3	4.0	2,555 (90,100)	6.3	13.2	
	5.2	1,720 (60,600)	5.5	13.3	
	9.5	1,695 (59,800)	6.7	13.2	
	2.3	860 (30,300)	5.5	13.3	
	1.7	835 (29,500)	7.9	13.1	
	1.3	0 (0)	0.0	0.0	
4	4.0	3,380 (119,400)	5.9	14.0	
	5.2	2,550 (89,900)	5.2	14.3	
	9.5	2,520 (89,000)	6.0	14.3	
	2.3	1,690 (59,500)	5.0	14.9	
	1.7	1,665 (58,700)	6.2	14.8	
	1.3	830 (29,200)	4.5	16.5	
5	24.0	2,235 (78,600)	0.106	—	
6					136 (1,500)
7					798 (877)

Figure 6-1. Model plant for new "greenfield" smelter processing high-impurity materials.

TABLE 6-1. MODEL PLANT CHARGE COMPOSITION AND SULFUR ELIMINATION FOR GREENFIELD HIGH-IMPURITY SMELTER

Component	Weight percent	Amount contained in raw feed, Mg/day (tons/day)
Copper	22.9	312.3 (343.5)
Iron	19.6	267.3 (294.0)
Sulfur	27.0	368.2 (405.0)
Arsenic	3.9	53.2 (58.5)
Antimony	0.38	5.2 (5.7)
Lead	0.88	12.0 (13.2)
Zinc	1.33	18.2 (20.0)
Other	24.01	327.4 (360.2)
Operation		Sulfur eliminated,[a] Mg/day (tons/day)
Roasting		71.1 (78.2) (19.3%)
Smelting		104.7 (115.0) (28.4%)
Converting		192.3 (211.8) (52.3%)

[a]Based upon a charge of 1,364 Mg/day (1,500 tons/day) of dry material to the roaster.

- All the copper charged to the smelting furnace reports to matte.

- The matte produced contains 40 percent copper, 50 percent iron and sulfur, and 10 percent impurities.

- The copper, iron, and sulfur in the matte are in the form of cuprous sulfide (Cu_2S) and ferrous sulfide (FeS).

- All the sulfur contained in the matte is eliminated by oxidation to SO_2 during converter blowing.

The values shown for smelting and roasting are based on information provided by ASARCO on its Tacoma smelter and indicate that approximately 60 percent of the sulfur not eliminated during converting is eliminated during smelting and 40 percent during roasting.[2] ASARCO/Tacoma deliberately processes high-impurity concentrates for their arsenic and other impurity content. Recovery of these impurities from smelter offgases is by gas cooling and recovery of the condensed material in an arsenic processing plant. Thus, the clean gases entering the acid plant are essentially the same as those from a smelter processing low-impurity materials.

The roaster offgas parameters shown in Figure 6-1 are based on achieving an SO_2 concentration in the roaster offgases of 4.5 percent while eliminating 71.1 Mg (78.2 tons) of sulfur per day. The 4.5-percent SO_2 concentration selected is conservative when compared to the 5.0-percent level considered achievable for new multihearth roasters (see Section 3.2.1.1). Offgas parameters for the reverberatory smelting furnace were computed based on the following assumptions:

- The reverberatory furnace is fired with natural gas with a heating value of 37 MJ/Nm^3 (1,000 Btu/scf).

- The energy required per megagram of material smelted is 5.2 thousand GJ (4.5 million Btu/ton).

- All the sulfur eliminated in the furnace, 104.5 Mg/day (115 tons/day), is by oxidation to SO_2.

- The total volume of air entering the furnace is controlled to maintain a 1-percent oxygen concentration in the furnace uptake.

- Dilution due to infiltration of air into the waste-heat boilers, electrostatic precipitator, and flues downstream of the furnace is 100 percent.

Based on these assumptions, the aggregate flow rate--the components of which include combustion products, SO_2, excess air, and dilution air--for the model furnace were calculated along with the SO_2 and O_2 concentrations.

Distribution of sulfur elimination between the multihearth roaster and reverberatory furnace, while maintaining a relatively constant matte grade and SO_2 concentration in offgases, is dependent to a large extent on the composition and nature of the concentrate; the amount of pyritic sulfur and size distribution of the concentrate being the principal parameter of interest. It is recognized that these parameters vary, in some cases from day to day and particularly at a custom smelter, with commensurate changes in offgas SO_2 concentrations. Admittedly, this creates difficulties in the design of a new smelter. Although it also poses similar problems in developing model plant parameters, EPA is mandated to assess the environmental, energy, and economic aspects as an essential part of the standard development process. Model plant analysis has been determined to be a reasonable and cost-effective means of making these assessments. Model plants are not intended to represent what an individual plant should look like, but rather to form the bases for analyses of the impact of the regulation on the industry as a whole. Therefore the average concentrate composition used at ASARCO-Tacoma in 1979 is used as the feed for the new greenfield smelter model plant.

As shown in Figure 6-1, the offgas parameters associated with converting are variable both in terms of flow and SO_2 concentration. As discussed in Sections 3.2.3.1 and 4.5.1, this is due to the cyclic nature of converter operations and the need to schedule multiple converters to maintain a continuous flow of SO_2-bearing offgas of sufficient SO_2 concentration to operate a DC/DA sulfuric acid plant autothermally. The converter schedule adopted for the model plant is presented in Figure 6-2. The schedule is based on the operation of three converters to perform five converter cycles daily. The duration of each cycle is 11 hours, with 6 hours required for slag blow, 3 hours for the copper or finish blow, and a total of 2 hours for charging and skimming. Intercycle time for each of the three converters is about 3½ hours. The charge per cycle consists of 12 ladles of matte, which

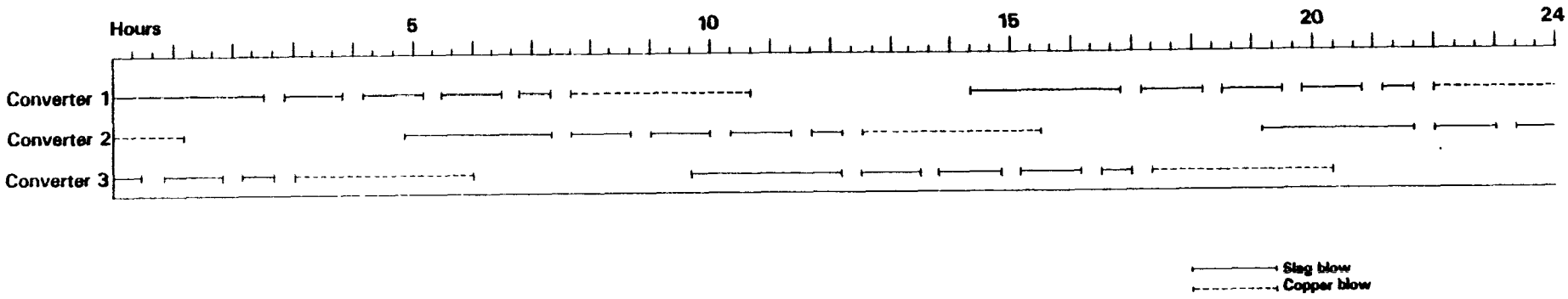

Figure 6-2. Model smelter converter operating schedule.

is added intermittently in a 5-2-2-2-1 sequence. Each ladle contains 13 Mg (14.3 tons) of matte.

Table 6-2 summarizes the six sets of conditions encountered and the duration of each condition in hours per day resulting from the converter schedule cited above. As indicated, the conditions range from having all three converters idle for an aggregate of 1-1/3 hours per day to having two converters on slag blow and one converter on copper blow for an aggregate of 4 hours per day. The flow rates and SO_2 and O_2 concentrations shown in Figure 6-1 were computed based on the estimated flow and sulfur elimination produced by an individual converter during the slag blowing and copper blowing portions of a converter cycle. The estimates were based on the following assumptions:

- A slag blow lasts 6 hours and a copper blow lasts 3 hours.
- A total of 156 Mg (172 tons) of matte composed of 50 percent Cu_2S, 40 percent FeS, and 10 percent impurities are processed per converter cycle.
- During slag blowing, all the FeS contained in the matte is oxidized to FeO and SO_2.
- During copper blowing, all the Cu_2S contained in the matte is oxidized to Cu and SO_2.
- The impurities present in the matte and cold dope additions result in no additional oxygen demand.
- Air used for blowing is not enriched.
- Oxygen efficiency during both blowing periods is 75 percent.
- Dilution due to infiltration is 100 percent.
- There are five converter cycles per day.

It should be noted that converter flows based on these assumptions are calculated using mean flow rates for slag and copper blows (see Appendix J for an example calculation). It is recognized that these flows exhibit a variability due to the variability in blowing rates. During a study of this variability, standard deviations of offgases from copper and slag blows were determined to be approximately 15 percent of the mean flows.[3] Changes to acid plant flows shown in Figure 6-1 and Table 6-3 that would result by applying one and even two standard deviations to determine maximum acid plant flows for acid

TABLE 6-2. MODEL PLANT--GREENFIELD HIGH-IMPURITY SMELTER REPRESENTATIVE CONVERTER OFFGAS STREAM PROFILE[a]

Converter status			Hours/ day	Total gas flow from converters,[b] Nm^3/min (scfm)	Vol. % SO_2	Vol. % O_2
Slag blow	Copper blow	Idle				
2	1	0	4	2,550 (90,100)	6.3	13.2
2	0	1	5.2	1,720 (60,600)	5.5	13.3
1	1	1	9.5	1,690 (59,800)	6.7	13.2
1	0	2	2.3	860 (30,300)	5.5	13.3
0	1	2	1.7	840 (29,500)	7.9	13.1
0	0	3	1.3	0	--	--
Average				1,610 (56,800)	6.3	13.2

[a]Based upon a three-converter operation performing five converter cycles daily.

[b]Assumes 100 percent dilution after the offgas offtake.

plant sizing would be within the study grade estimates required for subsequent analyses and would not materially change the results of these analyses.[4]

The model plant controls the SO_2 from roasters and converters with a DC/DA acid plant, consistent with the existing NSPS, which is the baseline for new "greenfield" smelters. The acid plants for this model are equipped with burners to heat the gases at startup and during operation, if necessary. As indicated in Figure 6-1, the acid plant yields 798 Mg/day (877 tons/day) of sulfuric acid.

Control technologies for the control of weak SO_2 gas from reverberatory furnaces are described in Sections 4.3 and 4.4. The technologies selected for analysis and their corresponding performance levels are discussed below. Included are seven alternative control techniques corresponding to three levels of control ranging from 44 to 98 percent.

Table 6-3 shows the model plant process parameters estimated for the application of the SO_2 control alternatives. The first and least stringent control alternative is partial blending--i.e., blending a portion of the reverberatory offgas stream with the roaster and converter offgas streams and treating the combined streams in a DC/DA sulfuric acid plant. The level of blending selected, 45 percent, reflects the maximum quantity of reverberatory furnace gas that could be blended and maintain the blended gas-stream SO_2 concentration over the autothermal limit (3.5 percent SO_2) of the acid plant at all times, except when no converters are in the slag or copper blowing mode. The maximum flow to the acid plant is 4,870 Nm^3/min (172,000 scfm), and the minimum SO_2 concentration treated is 2.7 percent. Control effectiveness achieved on the reverberatory furnace is 44 percent. The remaining 55 percent of the reverberatory stream passes through a hot ESP (315° C [600° F]) before discharge to the atmosphere.

Alternatives 2 and 3 are similar. In both cases the reverberatory furnace gases are initially treated in a regenerative flue gas desulfurization (FGD) process to upgrade the SO_2 concentration of the gases. The resultant strong SO_2 gas stream discharged from the FGD is

TABLE 6-3 MODEL PLANT, NEW GREENFIELD HIGH-IMPURITY SMELTER CONTROL ALTERNATIVES

		Control Alternative								
		I-A 45% blending of reverberatory stream			I-B Treatment of reverberatory gases with an MgO FGD system followed by a DC/DA acid plant			I-C Treatment of reverberatory gases with an NH^3 system followed by a DC/DA acid plant		
Stream	Hours/day	Nm^3/min (scfm)	% SO_2	% O_2	Nm^3/min (scfm)	% SO_2	% O_2	Nm^3/min (scfm)	% SO_2	% O_2
Roaster gas		830 (29,200)	4.5	16.5	830 (29,200)	4.5	16.5	830 (29,200)	4.5	16.5
Reverberatory gas		3,315 (117,000)	1.7	11.9	3,315 (117,000)	1.7	11.9	3,315 (117,000)	1.7	11.9
Converter gas	4	2,555 (90,100)	6.30	13.2	2,555 (90,100)	6.30	13.2	2,555 (90,100)	6.30	13.2
	5.2	1,720 (60,600)	5.54	13.3	1,720 (60,600)	5.54	13.3	-,720 (60,600)	5.54	13.3
	9.5	1,695 (59,800)	6.69	13.2	1,695 (59,800)	6.69	13.2	1,695 (59,800)	6.69	13.2
	2.3	860 (30,300)	5.54	13.3	860 (30,300)	5.54	13.3	860 (30,300)	5.54	13.3
	1.7	835 (29,500)	7.87	13.1	840 (29,500)	7.87	13.1	840 (29,500)	7.87	13.1
	1.3	0 (0)	-	-	0 (0)	-	-	0 (0)	-	-
Acid plant feed stream	4	4,870 (172,000)	4.6	13.4	3,890 (137,300)	6.4	12.2	3,580 (126,500)	6.9	13.2
	5.2	4,035 (142,500)	3.9	13.5	3,050 (107,700)	6.0	12.0	2,750 (97,000)	6.7	13.3
	9.5	4.010 (141.700)	4.4	13.4	3,030 (106,900)	6.7	11.9	2,720 (96,200)	7.4	13.2
	2 3	3,180 (112,200)	3.5	13.5	2,190 (77,400)	6.2	11.4	1,890 (66,700)	7.2	13.3
	1.7	3,150 (111,400)	4.1	13.4	2,170 (76,600)	7.1	11.3	1,870 (65,900)	8.2	13.2
	1.3	2,320 (81,900)	2.7	13.6	1,330 (47,100)	6.6	10.2	1,030 (36,400)	8.5	13.3
FGD effluent, Nm^3/min (scfm)		-	-	-	3,260 (115,200)	0.017		3,260 (115,200)	0.017	
% SO_2 removal						90.0			90.0	
Acid plant effluent,[a] Nm^3/min (scfm)		3,680 (130,100)	0.076	-	2,660 (94,000)	0.123		2,360 (83,300)	0.137	
% SO_2 removal			98.3			98.3			98.3	
SO_2 controlled,[a,b] Mg/day (tons/day)		615	(677)		710	(781)		710	(781)	
SO_2 emissions,[a,c] Mg/day (tons/day)		125	(138)		33.4	(36.7)		33.4	(36.7)	
100% acid,[a,d] Mg/day (tons/day)		940	(1,037)		1,089	(1,198)		1,089	(1,198)	
Supplemental heat required in acid plant,[d] GJ/day (Btu/day)		7	(7×10^6)		0	(0)		0	(0)	

(continued)

TABLE 6-3 (continued)

Stream	Hours/ day	Control Alternative: I-D Treatment of reverberatory gases with a limestone FGD system, MHR, and CV to DC/DA acid plant			I-E 100% blending of reverberatory stream			I-F Oxygen enrichment and 100% blending of reverberatory stream			I-G Oxy-fuel and 100% blending of reverberatory stream		
		Nm^3/min (scfm)	% SO_2	% O_2	Nm^3/min (scfm)	% SO_2	% O_2	Nm^3/min (scfm)	% SO_2	% O_2	Nm^3/min (scfm)	% SO_2	% O_2
Roaster gas		830 (29,200)	4.5	16.5	830 (29,200)	4.5	16.5	830 (29,200)	4.5	16.5	830 (29,200)	4.5	16.5
Reverberatory gas		3,315 (117,000)	1.7	11.9	3,315 (117,000)	1.7	11.9	2,330 (82,200)	2 4	11.9	1,285 (45,300)	4.3	11.9
Converter gas	4	2,555 (90,100)	6.30	13.2	2,555 (90,100)	6.30	13.2	2,555 (90,100)	6.30	13.2	2,555 (90,100)	6.30	13.2
	5 2	1,720 (60,600)	5.54	13.3	1,720 (60,600)	5.54	13.3	1,720 (60,600)	5.54	13.3	1,720 (60,600)	5.54	13.3
	9.5	1,695 (59,800)	6.69	13.2	1,695 (59,800)	6.69	13.2	1,695 (59,800)	6.69	13.2	1,695 (59,800)	6.69	13.2
	2.3	860 (30,300)	5.54	13.3	860 (30,300)	5.54	13.3	860 (30,300)	5.54	13.3	860 (30,300)	5.54	13.3
	1 7	840 (29,500)	7.87	13.1	840 (29,500)	7.87	13.1	840 (29,500)	7.87	13.1	840 (29,500)	7.87	13.1
	1.3	0 (0)	-	-	0 (0)	-	-	0 (0)	-	-	0 (0)	-	-
Acid plant feed stream	4	3,380 (119,400)	5.9	14.0	6,690 (236,300)	3 8	13.0	5,710 (201,500)	4.5	12.5	4,660 (164,600)	5.4	13.6
	5.2	2,540 (89,800)	5.2	14.3	5,860 (206,800)	3.2	13.0	4,870 (172,000)	3.9	12.4	3,830 (135,100)	4.9	13.7
	9.5	2,520 (89,000)	6.0	14.3	5,830 (206,000)	3.6	12.9	4,850 (171,200)	4.3	12.3	3,800 (134,300)	5.4	13.7
	2 3	1,690 (59,500)	5.0	14.9	5,000 (176,500)	2.8	12.9	4,010 (141,700)	3.5	12.2	2,970 (104,800)	4.7	13.9
	1 7	1,660 (58,700)	6.2	14.8	4,980 (175,700)	3.2	12.9	3,890 (140,900)	4.0	12.1	2,940 (104,000)	5.4	13.8
	1.3	830 (29,200)	4.5	16.5	4,140 (146,200)	2.3	12.8	3,150 (111,400)	3.0	11.9	2,110 (71,500)	4.4	14.0
FGD effluent, Nm^3/min (scfm)		3,250 (115,200)	0.017	-	- -	-	-	- -	-	-	- -	-	-
% SO_2 removal			90.0										
Acid plant effl.,[a] Nm^3/min (scfm)		2,240 (78,600)	0.106		5,460 (192,800)	0.061	-	4,460 (161,100)	0.074	-	3,440 (121,200)	0.096	-
% SO_2 removal			98.3			98.3			98.3			98.3	
SO_2 controlled,[a] Mg/day (tons/day)		710 (781)			724 (796)			724 (800)			724 (800)		
SO_2 emissions,[a] Mg/day (tons/day)		28.0 (30.8)			12.5 (13.8)			12.5 (13.8)			12.5 (13.8)		
100% acid,[a,d] Mg/day (tons/day)		798 (877)			1,120 (1,230)			1,120 (1,230)			1,120 (1,230)		
Supplemental heat required in acid plant,[d] GJ/day (Btu/day)		0 (0)			78 (7.5×10^7)			6 (6×10^6)			0 (0)		

[a]Based on average converter flows and SO_2 concentrations.
[b]Total SO_2 controlled by FGD and acid plant.
[c]Total SO_2 emissions from FGD and acid plant.
[d]Double contact/double absorption acid plant.

then blended with the roaster and converter gases and subsequently treated in a DC/DA sulfuric acid plant with an autothermal limit of 4.5 percent SO_2. Alternative 2 employs magnesium oxide (MgO) scrubbing, which upgrades the SO_2 concentration to 10 percent; Alternative 3 uses ammonia (NH_3) scrubbing, which upgrades the SO_2 concentration to 25 percent. Both FGD processes are considered to be 90 percent effective in recovering SO_2 fed to them. This, coupled with the 98.3 percent SO_2 recovery achievable in the DC/DA sulfuric acid plant, results in a net control effectiveness for these alternatives of 88.5 percent for the reverberatory furnace alone and 95 percent smelter-wide. As shown in Table 6-3, maximum flow to the DC/DA acid plant is 3,890 Nm^3/min (137,300 scfm) and 3,580 Nm^3/min (126,500 scfm) for Alternatives 2 and 3, respectively.

Alternative 4 is the application of nonregenerative lime/limestone scrubbing, which produces a throwaway end product, for the control of the reverberatory furnace offgases and the continued use of a DC/DA sulfuric acid plant for the control of roaster and converter gas streams. As discussed in Section 4.3.2, lime/limestone scrubbing applied to a reverberatory furnace should achieve 90 percent control of the reverberatory furnace SO_2 emissions.

Alternative 5 consists of blending 100 percent of the reverberatory furnace gases with the roaster and converter gases and treating the blended gas stream in a DC/DA sulfuric acid plant. Again, the acid plant is designed for an autothermal limit of 3.5 percent SO_2. The SO_2 control effectiveness achieved on the reverberatory furnace is 98.3 percent. The maximum flow to the acid plant is 6,690 Nm^3/min (236,300 scfm). For this alternative, the SO_2 concentration of the blended stream will be moderately below the 3.5 percent considered necessary to operate the acid plant autothermally for a total of 10½ hours. Although somewhat conservative, it is assumed for this analysis that supplemental heat requirement for this alternative is estimated at 78 GJ (7.5×10^7 Btu/day).

Alternatives 6 and 7 both use oxygen to enhance the SO_2 concentration of the reverberatory furnace gases prior to blending them with

the roaster and converter gases, followed by treatment of the blended gas stream in a DC/DA sulfuric acid plant with autothermal limits of 3.5 and 4.5 percent SO_2, respectively. As with Alternative 5, gas blending, 98.3 percent SO_2 control is achieved with either alternative. In the case of Alternative 6, oxygen enrichment, sufficient oxygen (105 Mg/day [116 tons/day]) is introduced to upgrade the oxygen concentration of the primary combustion air to the reverberatory furnace to 25 percent. The result is a 40-percent increase in the SO_2 concentration of the reverberatory furnace gases and a 30-percent decrease in the gas flow from the reverberatory gases against that indicated on the model plant under baseline conditions. As discussed in Section 4.4.6, the increase in SO_2 concentration and decrease in gas flow are a result of a reduction in nitrogen dilution due to the substitution of oxgyen for air and a reduction in the volume of combustion gases generated due to a reduction (about 18 percent) in the quantity of fuel required per ton of material smelted.

In the case of Alternative 7, oxyfuel burners are substituted for the conventional air-fuel burners. Then, industrial grade oxygen (199 Mg/day [219 tons/day]) is used to provide 100 percent of the primary combustion air (see Section 4.4.6). This results in an increase in SO_2 concentration (150 percent) and a decrease in gas flow (60 percent) from the reverberatory furnace. Again, this is due to a decrease in nitrogen dilution and a decrease in smelting fuel requirements (40 percent).

As with gas blending (Alternative 5), the SO_2 concentration of the blended roaster, reverberatory furnace, and converter gases under Alternative 6 (oxygen enrichment) is projected to be below the autothermal limit of the DC/DA sulfuric acid plant (3.5 percent) for an aggregate of about 1-1/3 hours. As shown in Table 6-3, supplementary heat required under Alternative 6 is 6 GJ/day (6×10^6 Btu/day). Although the autothermal limit for the acid plant applied under Alternative 7 (oxyfuel) is higher, no supplementary heat is needed because the blended gas stream never falls below the autothermal

limit. The maximum gas flow treated by the DC/DA sulfuric acid plants under Alternatives 6 and 7 is 5,710 Nm^3/min (201,500 scfm) and 4,660 Nm^3/min (164,600 scfm), respectively.

As noted previously, in the event that the exemption of the reverberatory smelting furnace from the SO_2 standard continues, a separate standard for particulate control will be considered. Candidate particulate matter control alternatives for reverberatory smelting furnaces are identified and evaluated in Section 4.6. Those selected for further analyses are:

- Spray cooling followed by an ESP
- Spray cooling to be followed by a fabric filter (baghouse).

In both alternatives the furnace offgas is cooled to about 110° C (230° F) after leaving the hot ESP included in the baseline case.

As discussed in Section 4.6, the level of emission control or emission reduction achievable with the application of a particulate matter control device, as measured by EPA Method 5, is dependent on the quantity of volatile, condensible particulate matter present in the furnace offgases and the operating temperature of the control device. The former is proportional, for the most part, to the quantity of volatile impurities contained in the smelter charge. At a very high-impurity smelter, such as that represented by the model plant, the effectiveness of a hot ESP in controlling both the nonvolatile and volatile constituents of the particulate matter emitted is estimated to be about 50 percent. In contrast, a cold control device or a hot and cold control device in series is demonstrated to achieve 97 to 99 percent control for both constituents. For a new smelter processing high-impurity materials at or near the levels specified in the reverberatory furnace exemption, a cold control device alone would be suitable. For a new smelter processing materials with a high level of one or more volatile impurities as shown for the model plant in Table 6-1, a cold control device alone would not be suitable. Rather, two control devices in series, one hot and one cold, would be required. The hot control device (e.g., a hot ESP) would collect copper-rich

dusts. The cold control device (e.g., spray chamber followed by a baghouse) would collect the condensable constituents passing through the hot device. Prescribing a particulate matter standard for an exempted reverberatory furnace would require installation of a cold device in addition to the hot ESP included in the baseline case.

Control parameters for each of the two particulate control alternatives are shown in Table 6-4. The ESP has a design efficiency of 97 percent, a specific collection area of 980 m^2 per actual cubic meters per minute (Am^3/min [300 ft^2/acfm]), and a design treatment velocity of 9 to 12 cm/s (3 to 4 ft/s). Particulate matter from reverberatory smelting furnaces is considered to have a low resistivity. The fabric filter is multicompartmented, operates at an air cloth ratio of 2.5 to 1, is equipped with a mechanical shaker, and uses Dacron or Orlon bags.

6.3 FUGITIVE EMISSION CONTROL

Fugitive emissions include those that escape from material transfer operations, leakage from process vessels, and leakage from offgas flues. Their control includes capture and collection. Capture is accomplished by hoods or enclosures into which the emissions are drawn by induced or natural draft.

A hot ESP for the control of particulate matter in reverberatory furnace primary offgas streams is included in the baseline. It must be recognized, however, that hot ESP control prior to cold control may not be necessary in all cases. The amount of condensible material (feed impurities removed in the smelting furnace) will dictate the configuration of the particulate control system. For instance, with low levels of condensibles in the furnace offgases, it would not be necessary to separate the copper-bearing materials from the condensibles. Consequently, evaporative cooling of the gas stream followed by a cold ESP or fabric filter is adequate. However, for reverberatory furnaces processing high-impurity materials, a different situation could exist. The presence of relatively large amounts of condensibles in the offgases may necessitate the use of a hot ESP in series with either a cold ESP or a cold fabric filter. This configuration may be required so that

TABLE 6-4. PARAMETERS FOR PARTICULATE CONTROL ALTERNATIVES--PRIMARY OFFGASES FROM REVERBERATORY FURNACES

Control device	Design bases
Electrostatic precipitator	Specific collection area--980 $m^2/Am^3/min$ (300 $ft^2/acfm$) Treatment velocity--9 to 12 cm/s (3 to 4 ft/s)
Fabric filter	Air-to-cloth ratio--2.5 to 1.0 Cleaning mechanism--mechanical shaking Filter material--Dacron or Orlon

an adequate portion of the condensibles could be purged prior to dust recycle. The possible need to purge a portion of the recycled condensibles involves maintaining favorable conditions for impurity elimination in the smelting furnace. The impurity level above which hot/cold control is required could be determined through a rigorous thermodynamic assessment of the smelting process; however, such an analysis is beyond the scope of this study.

This study is limited to the control of particulate fugitive emissions. Collection of these emissions may be accomplished by fabric filters, ESP's, or scrubbers. Although the fugitive emissions contain SO_2, their capture results in dilution to very low concentrations, which are considered impractical to control. The capture and collection of particulate emissions will, however, result in the capture of the fugitive SO_2 emissions and their dispersal through a stack with the results invariably being a reduction in the ambient SO_2 levels near the smelter.

Sources selected for possible regulation and their particulate emission rates in kilograms per megagram of blister copper produced are as follows:

- Multihearth roasters: Calcine discharge, 5.20
- Smelting furnaces: Matte tapping, 0.34; slag skimming, 0.31.
- Converters: Blowing, 6.60; charging, skimming, and pouring, 3.34.

The ranking of these sources is detailed in Section 3.3.4.

Control techniques for these sources, including both capture and collection, are described in Sections 4.7 and 4.6. Those selected for evaluation along with their performance capability and design parameters are presented in Table 6-5. The capture technique selected for calcine discharge operations associated with multihearth roasters is the larry car interlock ventilation system detailed in Section 4.7.4. The ventilation rate applied over the duration of each larry car charge is 140 Nm^3 (5,000 scfm). Capture effectiveness achieved is estimated at 90 percent. The model plant assumes that two larry cars are charged

TABLE 6-5. SUMMARY OF FUGITIVE PARTICULATE EMISSIONS CAPTURE AND CONTROL SYSTEMS

Source	Capture system	Capture efficiency, %	Design ventilation rate, Nm^3/min (scfm)	Temperature, °C (°F)	Collection device, ESP	Collection device, FF	Collection device control efficiency, %	Overall system efficiency, %
Roasters Calcine discharge	Larry car interlock ventilation system	90[a]	280 (10,000)	49 (120)	-[b]	X	99.6[c]	≅89.6
Smelting furnaces Matte tapping and slag skimming	Tap port and skim bay hoods, ladle hoods, and close-fitting launder covers	90[a]	1,840 (65,000)	38-79 (100-175)	-[b]	X	≥99.0[d]	≥89.1
Converters Blowing, charging, skimming and pouring	1. Air curtain and fixed enclosure	90[e]	5,660 (200,000)	66 (150)	-[b]	X	≥99.6[d]	≥89.6
	2. Building evacuation	95[f]	21,240 (750,000)	54 (130)	-[b]	X	98.7[g]	≅93.8

[a]Based upon visible emissions data obtained at the ASARCO-Tacoma smelter.

[b]Not assessed due to lack of demonstration on fugitive sources.

[c]Based on emissions test data obtained at Phelps Dodge-Douglas smelter.

[d]No actual test data exist; however, analysis of the particulate size distribution involved indicates that removal efficiency should be at least as high as the indicated value.

[e]Estimate based upon visual observations made at ASARCO-Tacoma.

[f]Based upon visible emissions data obtained at the ASARCO-El Paso smelter.

[g]Based upon emissions test data obtained at the ASARCO-El Paso smelter.

simultaneously five times per hour, or once every 12 minutes, for a duration of 1 to 2 minutes per charge. Thus, the maximum flow to the control device is 280 Nm^3/min (10,000 scfm) at 30° C (85° F).

Matte tapping and slag skimming controls consist of applying local hooding and ventilation both at the tap port and at the launder to ladle or slag pot transfer point. As noted in Section 4.7.5, 90 percent capture effectiveness is considered achievable at both locations. For matte tapping, a total ventilation rate of 1,130 Nm^3/min (40,000 scfm) is assumed--280 Nm^3/min (10,000 scfm) applied at the tap port and 850 Nm^3/min (30,000 scfm) at the matte ladle. For slag skimming, it is assumed that 140 Nm^3/min (5,000 scfm) is applied at the tap port and 560 Nm^3/min (20,000 scfm) at the slag pot. Maximum flow to the control device is set at 1,840 Nm^3/min (65,000 scfm) at 50° C (120° F). This assumes that one matte tap and one slag skim would occur simultaneously.

Alternative techniques for the control of fugitive emissions from copper converters are discussed in Section 4.7.6. These include both local ventilation and general ventilation techniques. The local ventilation techniques range from the application of fixed secondary hoods--which achieve only marginal capture efficiencies, especially during periods when the converter is rolled out for charging and skimming--to the application of an air curtain/fixed enclosure hood capable of achieving an estimated capture effectiveness of 90 percent or better (see Section 4.7.6.2). The general ventilation technique evaluated consists of building evacuation (see Section 4.7.6.1). Under this technique, the structure housing the converters is enclosed, and the resultant building volume ventilated at a rate sufficient to prevent out-leakage from openings in the building and to maintain a reasonable worker environment within the building. As noted in Section 4.7.6.1, if properly applied, a capture efficiency of 95 percent or better should be achievable using this capture technique. Both building evacuation and the air curtain/fixed enclosure hood will be evaluated as alternative bases for the possible regulation of fugitive particulate matter emissions from copper converters.

As noted in Table 6-5, the design flow rate for the building evacuation system is 25,500 actual cubic meters per minute (Am^3/min) [900,000 acfm] at 55° C (130° F). This flow is based on an assumed volume for the model plant converter building of 51,000 Am^3/min (1.8 million acfm) and an air change rate of 30 changes per hour. The air change rate selected is nearly two times that applied at the ASARCO-El Paso smelter to alleviate problems encountered at El Paso concerning elevated worker exposure to heat and pollutants within the building.

Operating parameters assumed for the air curtain secondary hood for various modes of converter operation are the same as those presented in Table 4-18 for the proposed ASARCO-Tacoma secondary hood. The maximum condition encountered is during charging or skimming, when 510 Am^3/min (18,000 acfm) is provided to the air curtain slot and 2,300 Am^3/min (82,000 acfm) is ventilated at the exhaust hood. The design flow rate to the control device is 5,660 Am^3/min (200,000 acfm) at 65° C (150° F), which accommodates the worst-case situation anticipated for the model plant--i.e., two converters blowing and one converter being charged or skimmed. Applicable control devices for the collection of captured fugitive particulate emissions include ESP's, fabric filters, and scrubbers. However, since performance data available are limited to the application of fabric filters, fabric filters alone will be analyzed. As noted in Section 4.6.3, although inlet conditions may result in relatively dilute inlet concentrations, 98 to 99 percent particulate matter control is demonstrated to be achievable. For the purpose of this analysis, the fabric filters applied will be mechanical shaker types equipped with multiple compartments, Orlon or Dacron bags, and operated at an air-to-cloth ratio of 2.5 to 1.

6.4 EXPANSION OPTIONS AND ALTERNATIVE CONTROL TECHNOLOGIES

For the purpose of analyzing smelter expansions, the following is assumed:

- Owners/operators will expand existing facilities.
- Owners/operators will consider reducing emissions from each expanded facility to levels at or below preexpansion levels so that the expanded facility does not become subject to the provisions of 40 CFR 60 for modified sources.

- The fixed capital cost of the expansion of an existing facility would not exceed 50 percent of that required to replace the existing facility entirely so that the expanded facility does not become classified as a reconstruction.

Thus, insofar as expansion options are concerned, the objective of the analysis is to determine if it is economically feasible to increase production at existing smelters by increasing the capacity of existing equipment and reducing emissions to preexpansion levels. Generally, emissions from an expanded piece of process equipment will increase proportionately to the increase in capacity achieved as a result of the expansion.

As discussed in Section 3.2, there are seven distinct smelting configurations used in the United States. Options available for effecting a production capacity increase across each of these configurations are discussed in detail in Section 3.4. As noted, the production-rate-limiting process step at most existing U.S. primary copper smelters is the smelting furnace. Thus, the expansion options evaluated focused primarily on increasing production through the smelting furnace.

A listing of the smelting configurations and the expansion options selected for analysis are shown in Table 6-6. As indicated in this table, expansion options available for existing reverberatory furnaces (Configurations I, II, and III) include 20-percent expansions at green- and calcine-charged furnaces by oxygen enrichment of furnace combustion air; a 40-percent expansion at green-charged furnaces by conversion to a calcine charge; a 40-percent expansion at green-charged furnaces by replacing conventional end-wall burners with roof-mounted oxy-fuel burners; 50- and 100-percent expansion at Configurations I and II smelters and 60-percent expansion at Configuration III smelters by replacing the reverberatory furnace/roaster combination with an oxygen flash furnace. Green-charged electric furnaces (Configuration IV) may also be expanded by 40 percent by converting to calcine charge and up to 100 percent by conversion to flash smelting. A 20-percent expansion option is available for existing flash furnaces (Configuration V) using oxygen enrichment of the flash furnace combustion air.

TABLE 6-6. SMELTING CONFIGURATIONS/EXPANSION OPTIONS

Configuration	Percent expansion	Oxygen enrichment	Expansion options: Oxy-fuel burner	Expansion options: Convert to calcine charge	Expansion options: Convert to flash smelting
I. MHR-RV-CV	20	X			
	50				X
	100				X
II. RV-CV	20	X			
	50	X			
	40			X	
	50				X
	100				X
III. FBR-RV-CV	20	X			X
	60				
IV. EF-CV	40			X	
V. FF-CV	24	20	X		

MHR = Multihearth roaster
RV = Reverberatory smelting furnace
CV = Converter
FBR = Fluid-bed roaster
EF = Electric furnace
FF = Flash furnace

Additional options discussed in Section 3.4 but not considered for analysis include physical expansion of the existing furnace, elimination of converter slag return, and the use of oxy-fuel burners on calcine-charged reverberatory smelting furnaces. Physical expansion is currently regarded by the U.S. industry as an option unlikely to be exercised. Elimination of converter slag return will require the addition of slag treatment facilities, with necessary pollutant controls. The extra investment, plus the additional operating costs of another processing unit, would tend to exclude this alternative. Use of oxy-fuel burners on calcine-charged furnaces using Wagstaff gun charging is not considered demonstrated.

In projecting expansion of furnace capacity, the need for additional roaster and converter capacity must be considered. Sufficient excess roaster and converter capacity is considered to be available at most existing smelters to accommodate throughput increases up to 20 percent. Except for expansion options in which a flash furnace replaces the smelting furnace, a new roaster and/or converter are required for expansion options resulting in a more than 20 percent capacity increase. Because of the higher matte grade after expansion, no additional converter capacity is required for options involving replacement of the reverberatory furnace by a flash furnace.

Model plants are used to assess the effect of the standards of performance on future capacity expansions at existing smelters employing any of the five smelting configurations for which expansion options are available. The model plant configurations and the existing smelters they represent are shown in Table 6-7. The Kennecott Garfield smelter, which uses Noranda reactors, is not represented in the models because no viable expansion option is available other than the addition of a new Noranda reactor controllable using a DC/DA acid plant. The Cities Service smelter--which uses a fluid-bed roaster, electric furnace, and converter--is not represented because this smelter operates primarily for the production of sulfuric acid. The White Pine smelter also is not represented because it processes native copper rather than sulfide ore concentrates.

TABLE 6-7. MODEL PLANT CONFIGURATIONS AND EXISTING U.S. SMELTERS

Existing smelter model[a]	Smelters represented
I. MHR-RV-CV	ASARCO-Tacoma ASARCO-Hayden ASARCO-El Paso Phelps Dodge-Douglas
II. RV-CV	Kennecott-Hurley Kennecott-McGill Phelps Dodge-Morenci[b] Phelps Dodge-Ajo Magma
III. FBR-RV-CV	Kennecott-Hayden Phelps Dodge-Morenci[b]
IV. EF-CV	Inspiration
V. FF-CV	Phelps Dodge-Hidalgo

[a] CV = Converter.
EF = Electric furnace.
FBR = Fluid-bed roaster.
FF = Flash furnace.
MHR = Multihearth roaster.
RV = Reverberatory furnace.

[b] Has both green-charge and calcine-charge RV.

Each model plant is sized at 1,364 Mg/day (1,500 tons/day) to allow for analyses of alternative expansion options on a common basis. Flow charts showing the model plant configurations are presented in Figures 6-3 through 6-7. Converter SO_2 emissions from Model Plants I and II and roaster and converter SO_2 emissions from Model Plant III are treated in a single contact/single absorption (SC/SA) sulfuric acid plant. Converter and smelting furnace SO_2 emissions from Model Plants IV and V are treated in a DC/DA sulfuric acid plant. Process offgases from the reverberatory smelting furnaces in Model Plants I, II, and III are passed through wasteheat boilers and then through a hot ESP (not shown in Figures 6-3, 6-4, and 6-5) to remove particulate matter prior to stack discharge. Fugitive emissions are neither captured nor controlled. Assumed feeds, matte grades, and sulfur elimination ratios for each of the five model plants are shown in Table 6-8.

The data shown in Figures 6-3 through 6-7 are average gas flows and concentrations. Acid plants are sized to accommodate the maximum flows that occur when two of the three active converters are on slag blow and one on copper blow (Model Plants I through IV) and one active converter on slag blow and one on copper blow (Model Plant V). These maximum flows and associated SO_2 and O_2 concentrations are shown in Figures 6-3 through 6-7.

Several control alternatives are considered for each expansion option. Each combination of an expansion option and a control alternative is considered an expansion scenario. A total of 26 expansion scenarios will be analyzed. The control alternatives considered include:

- Blending with strong streams and treatment in a sulfuric acid plant.
- Treatment in a nonregenerative FGD, i.e., lime/limestone.
- Treatment in a MAGOX regenerative FGD, i.e., blending the FGD gas with other strong streams, and treatment in a sulfuric acid plant.

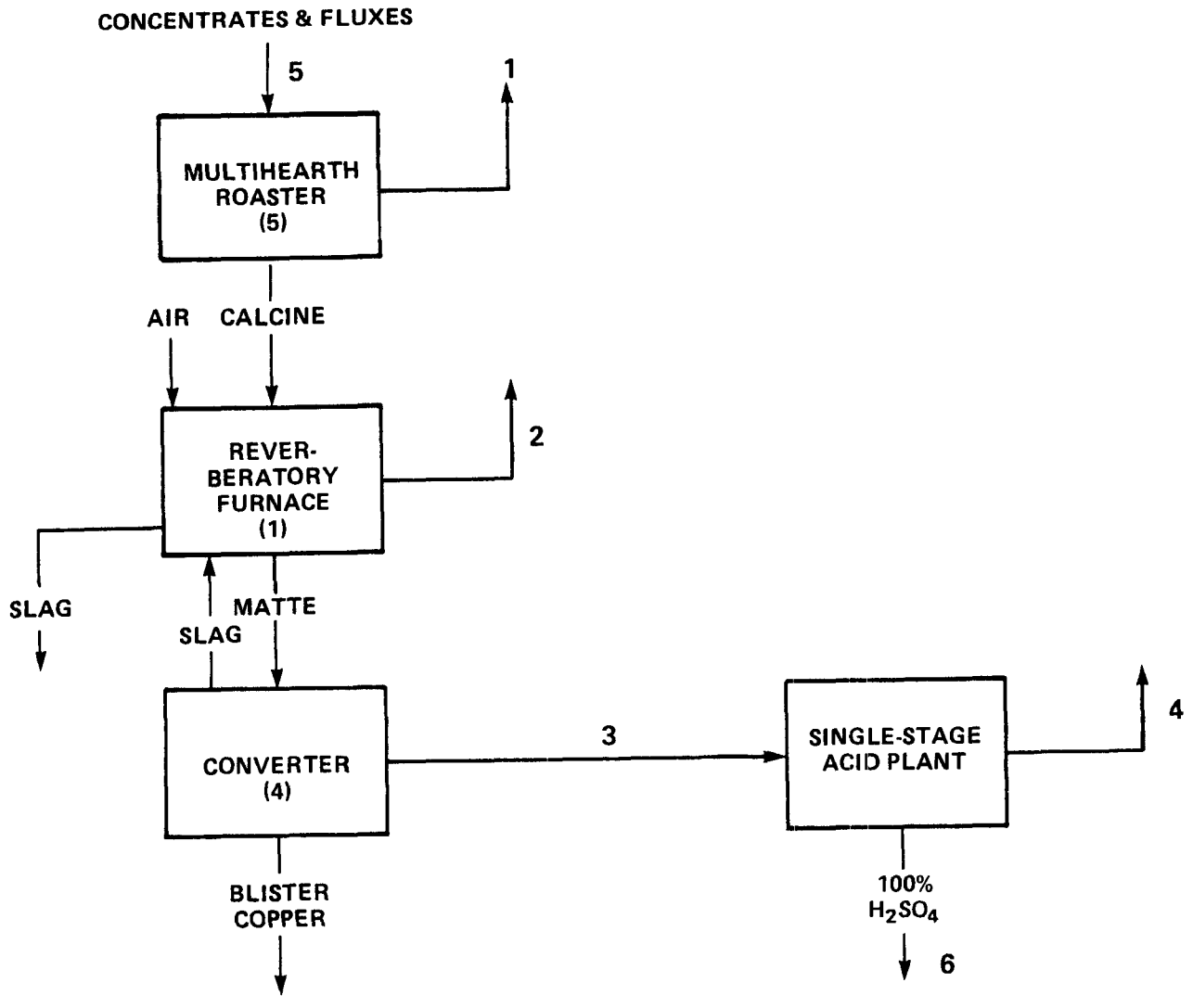

	Nm^3/min (scfm)	SO_2 (%)	O_2 (%)	Mg/day (tons/day)
1	2,000 (75,000)	1.5	18.7	
2	5,980 (211,200)	0.8	11.4	
3	2,300 (81,300)	4.3	15.4	
4	2,160 (76,300)	–	–	
5				1,364 (1,500)
6				551 (606)
Maximum flow to acid plant	3,660 (129,200)	4.3	15.7	

Figure 6-3. Model Plant I for expansion of existing smelters.

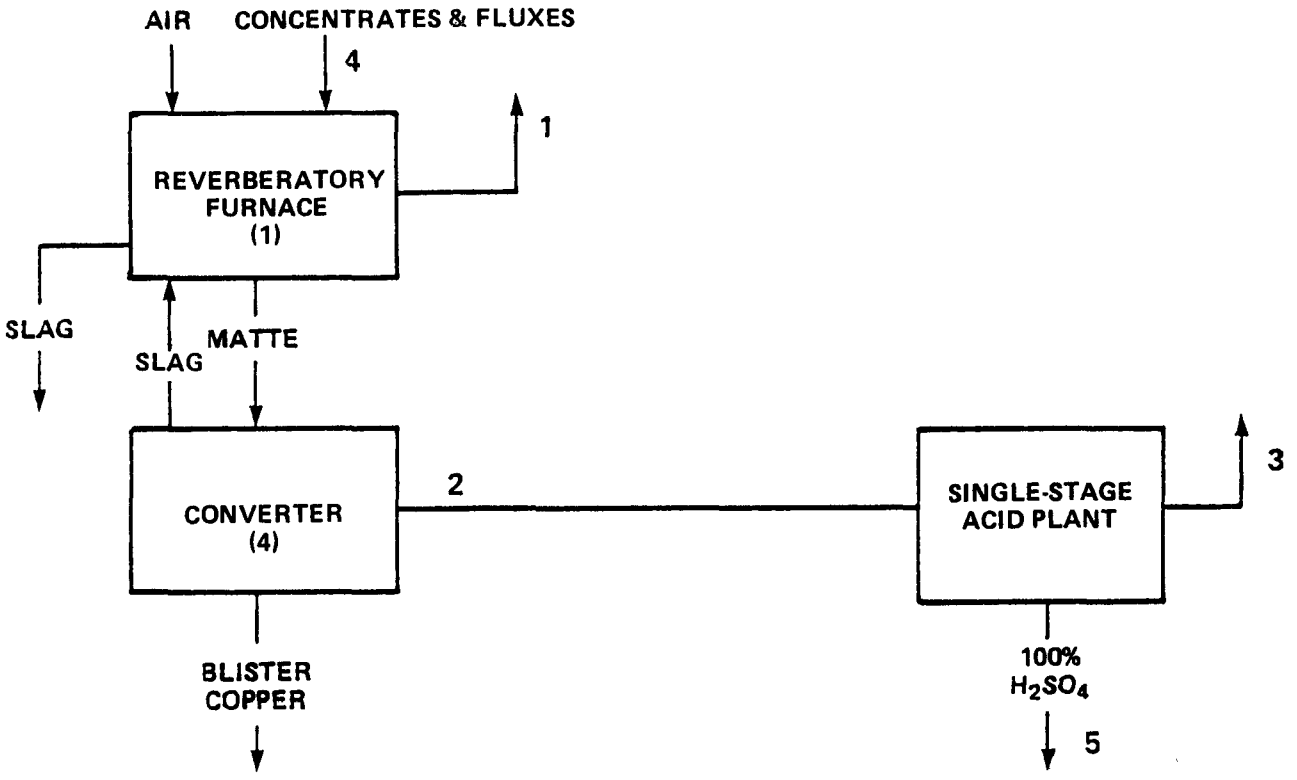

	Nm^3/min (scfm)	SO_2 (%)	O_2 (%)	Mg/day (tons/day)
1	5,940 (209,900)	1.4	11.0	
2	2,770 (98,000)	4.3	15.4	
3	2,600 (92,000)	–	–	
4				1,364 (1,500)
5				667 (734)
Maximum flow to acid plant	4,510 (159,200)	4.3	15.5	

Figure 6-4. Model Plant II for expansion of existing smelters.

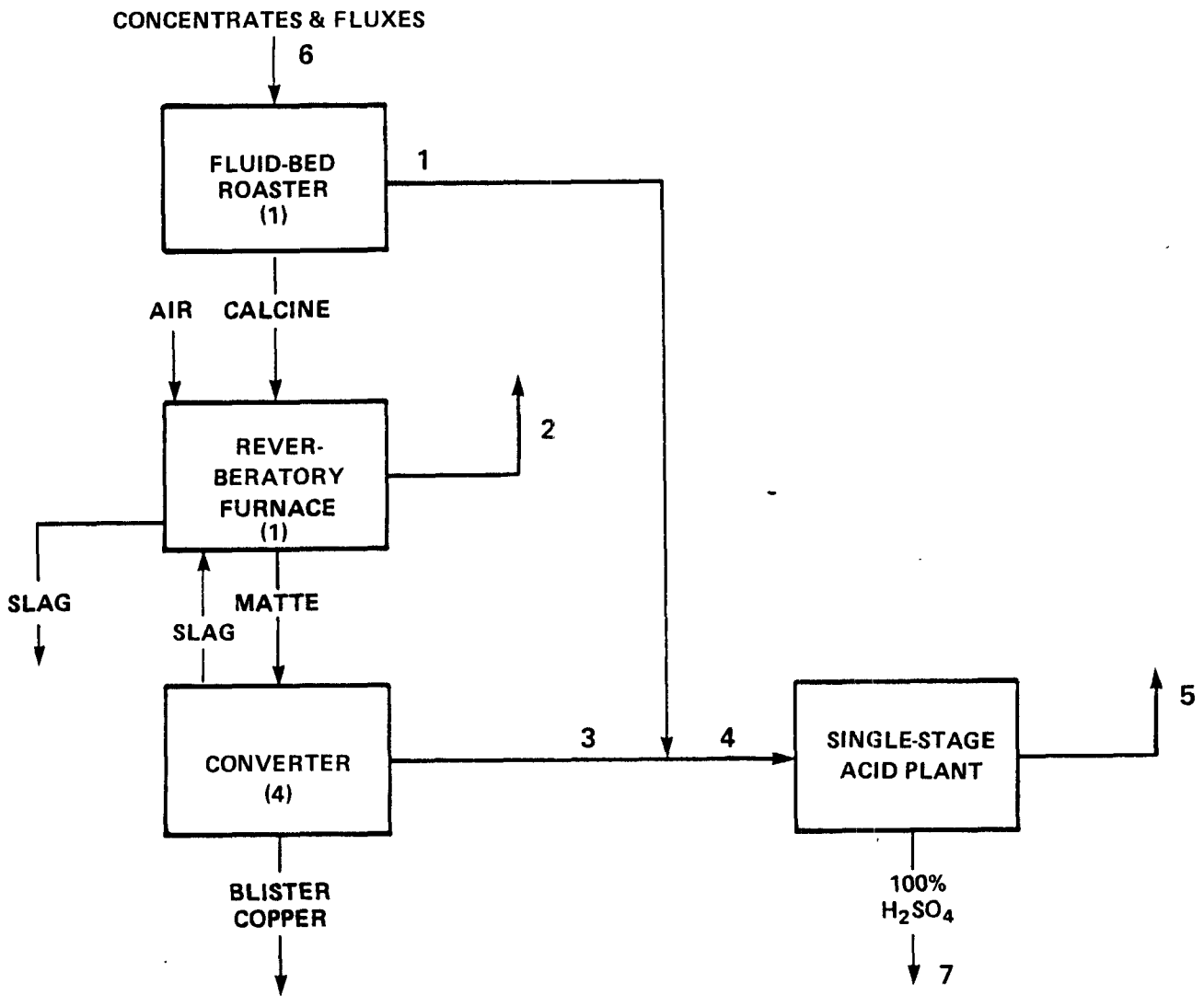

	Nm^3/min (scfm)	SO_2 (%)	O_2 (%)	Mg/day (tons/day)
1	1,040 (36,700)	9.6	11.4	
2	5,010 (176,900)	0.4	11.4	
3	1,330 (46,800)	6.5	11.7	
4	2,370 (83,500)	7.9	11.6	
5	2,100 (74,200)			
6				1,364 (1,500)
7				1,034 (1,138)
Maximum flow to acid plant	3,160 (111,700)	7.5	12.4	

Figure 6-5. Model Plant III for expansion of existing smelters.

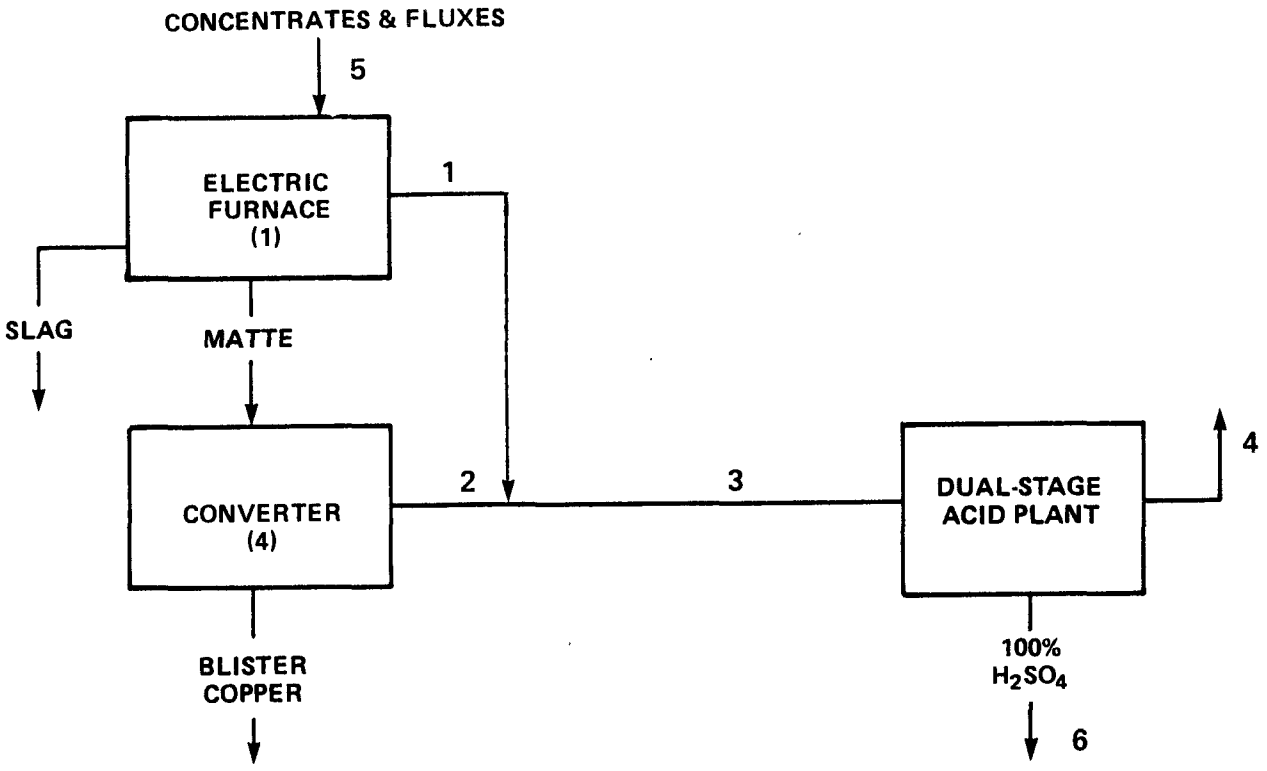

	Nm^3/min (scfm)	SO_2 (%)	O_2 (%)	Mg/day (tons/day)
1	1,160 (40,800)	6.0	19.7	
2	3,330 (117,600)	4.3	11.3	
3	4,490 (158,400)	4.7	13.5	
4	4,170 (147,300)	–	–	
5				1,364 (1,500)
6				1,224 (1,346)
Maximum flow to acid plant	6,540 (230,800)	4.6	16.2	

Figure 6-6. Model Plant IV for expansion of existing smelters.

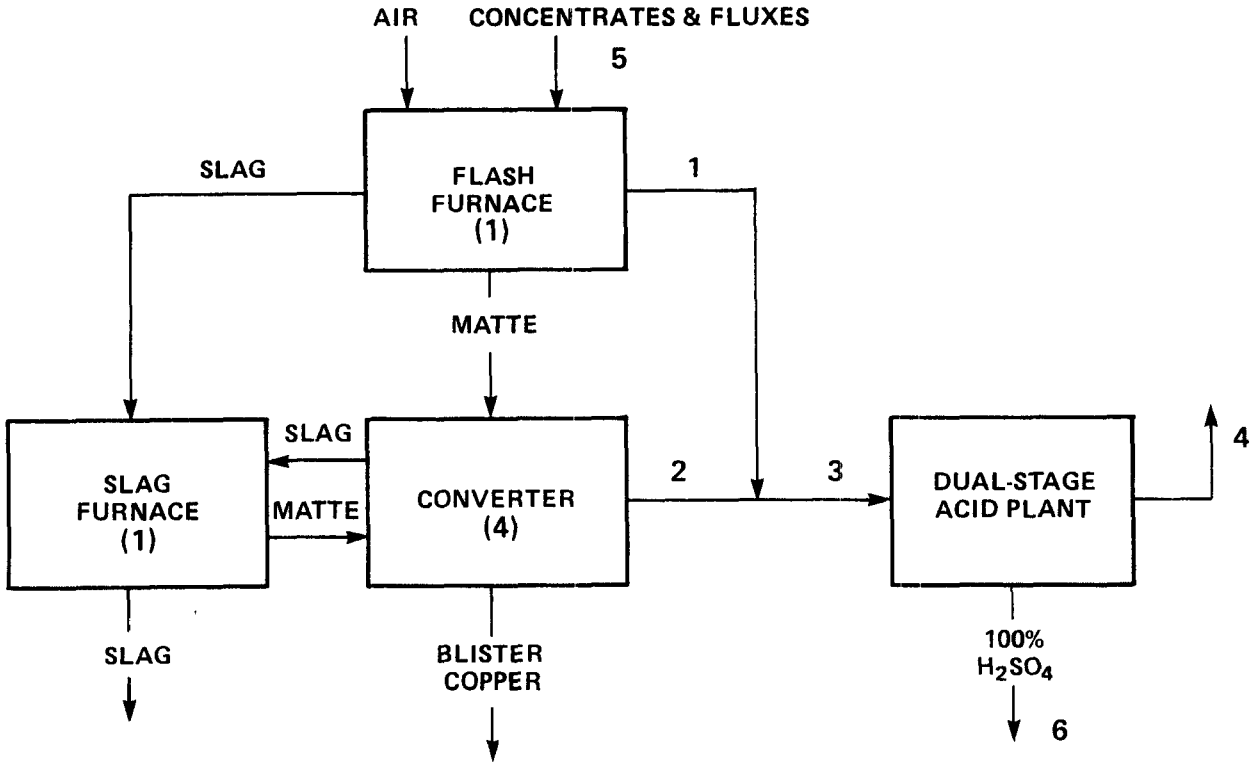

	Nm^3/min (scfm)	SO_2 (%)	O_2 (%)	Mg/day (tons/day)
1	1,570 (55,500)	10.3	5.0	
2	1,180 (41,700)	4.3	16.1	
3	2,810 (99,200)[a]	7.7	10.0	
4	2,490 (88,100)	–	–	
5				1,364 (1,500)
6				1,202 (1,322)
Maximum flow to acid plant	3,400 (120,700)	7.7	11.0	

[a]Includes air to maintain 1.1 O_2 to SO_2 ratio.

Figure 6-7. Model Plant V for expansion of existing smelters.

TABLE 6-8. MODEL PLANT EXPANSION SCENARIOS. EXIT GASES, COMPOSITION AND FLOW RATE[a,b,c]

Model plant Scenario	Applicability of parameters	Feed Mg/day (tons/day)	Roaster Nm³/m (scfm)	Roaster % SO_2	Roaster % O_2	Smelting furnace % SO_2	Smelting furnace % O_2	Smelting furnace Nm³/m (scfm) To air	Smelting furnace Nm³/m (scfm) To control	Converter Nm³/m (scfm)	Converter % SO_2	Converter % O_2
I MHR-RV-CV	Entire plant	1,364 (1,500)	1,995 (75,000)	1.5	18.7	0.8	11.4	5,980 (211,200)	- - - -	2,305 (81,300)	4.3	15 4
1	Entire plant	1,636 (1,800)	2,400 (84,600)	1.5	18.7	1.1	13.1	4,210 (148,600)	895 (31,600)	2,760 (97,600)	4.3	15.4
2	Entire plant	1,636 (1,800)	2,400 (84,600)	1.5	18.7	1.1	13.1	4,250 (150,100)	945 (33,400)	2,760 (97,600)	4.3	15.4
3	Entire plant	1,636 (1,800)	2,400 (84,600)	1.5	18.7	1.1	13.1	4,100 (145,100)	995 (35,100)	2,760 (97,600)	4.3	15 4
4	Entire plant	1,636 (1,800)	2,400 (84,600)	1.5	18.7	1.1	13.1	4,110 (145,100)	995 (35,000)	2,760 (97,600)	4.3	15 4
5	New flash furnace and old converter	2,045 (2,250)	- - - -	- -	- -	75.0	7.5	- - - -	245 (8,620)	1,845 (65,200)	4.3	16.3
6	New flash furnace and old converter	2,727 (3,000)	- - - -	- -	- -	75.0	7.5	- - - -	325 (11,500)	2,465 (87,000)	4.3	16 3
II RV-CV	Entire plant	1,364 (1,500)	- - - -	- -	- -	1.4	11.0	5,945 (209,900)	- - - -	2,775 (98,000)	4.3	15 4
7	Entire plant	1,636 (1,800)	- - - -	- -	- -	2.0	13.1	4,195 (148,200)	895 (31,500)	3,330 (117,600)	4.3	15.4
8	Entire plant	1,636 (1,800)	- - - -	- -	- -	2.0	13.1	4,145 (146,400)	940 (33,400)	3,330 (117,600)	4.3	15.4
9	Entire plant	1,636 (1,800)	- - - -	- -	- -	2.0	13.1	4,100 (144,700)	990 (35,000)	3,330 (117,600)	4.3	15.4
10	Entire plant	1,636 (1,800)	- - - -	- -	- -	2.0	13.1	4,100 (144,700)	990 (35,000)	3,330 (117,600)	4.3	15.4
11	Old converter	1,364 (1,500)	- - - -	- -	- -	- -	- -	- - - -	- - - -	2,770 (98,000)	4.3	15.4
	New converter and expanded reverb	682 (750)	- - - -	- -	- -	3.0	15.6	2,755 (97,200)	1,440 (50,900)	970 (34,200)	6.2	13.3
12	Old converters	1,364 (1,500)	- - - -	- -	- -	- -	- -	- - - -	- - - -	2,775 (98,000)	4.3	15.4
	New converter and expanded reverb	682 (750)	- - - -	- -	- -	3.0	15.6	2,640 (93,200)	1,555 (54,900)	970 (34,200)	6.2	13.3
13	Old converters	1,364 (1,500)	- - - -	- -	- -	- -	- -	- - - -	- - - -	2,775 (98,000)	4.3	15.4
	New converter and expanded reverb	682 (750)	- - - -	- -	- -	3.0	15.6	2,595 (91,600)	1,600 (56,500)	970 (34,200)	6.2	13.3
14	Old converters	1,364 (1,500)	- - - -	- -	- -	- -	- -	- - - -	- - - -	2,775 (98,000)	4.3	15.4
	New converter and expanded reverb	682 (750)	- - - -	- -	- -	3.0	15.6	2,595 (91,600)	1,600 (56,500)	970 (34,200)	6.2	13.3
15	Old converter and reverb	1,909 (2,100)	- - - -	- -	- -	0.8	11.4	15,600 (198,000)	- - - -	2,775 (98,000)	4.3	15.4
	New FBR and new converter	1,909 (2,100)	745 (26,300)	9.6	11.4	- -	- -	- - - -	- - - -	780 (27,600)	6.1	13.3
16	New flash furnace and old converters	2,045 (2,250)	- - - -	- -	- -	75.0	7.5	- - - -	280 (9,870)	2,105 (74,400)	4.3	16.3
17	New flash furnace and old converters	2,727 (3,000)	- - - -	- -	- -	75.0	7.5	- - - -	375 (13,200)	2,810 (98,100)	4.3	16.3
III FBR-RV-CV	Entire plant	1,364 (1,500)	1,040 (36,700)	9.6	11.4	0.4	11.4	5,010 (176,900)	- - - -	1,330 (46,800)	6.5	11.7
18	Entire plant	1,636 (1,800)	1,250 (44,100)	9.6	11.4	0.6	13.2	3,515 (124,100)	750 (26,400)	1,590 (56,200)	6.5	11.7
19	Entire plant	1,636 (1,800)	1,250 (44,100)	9.6	11.4	0.6	13.2	3,475 (122,600)	790 (27,900)	1,590 (56,200)	6.5	11.7
20	Entire plant	1,636 (1,800)	1,250 (44,100)	9.6	11.4	0.6	13.2	3,435 (121,200)	830 (29,300)	1,590 (56,200)	6.5	11.7
21	Entire plant	1,636 (1,800)	1,250 (44,100)	9.6	11.4	0.6	13.2	3,430 (121,200)	830 (29,300)	1,590 (56,200)	6.5	11.7
22	New flash furnace and old converters	2,182 (2,400)	- - - -	- -	- -	75.0	7.5	- - - -	305 (10,700)	2,275 (80,400)	4.3	16.3
IV EF-CV	Entire plant	1,364 (1,550)	- - - -	- -	- -	6.0	19.7	- - - -	1,155 40,800	3,330 (117,600)	4.3	15.4
23	Entire plant	1,909 (2,100)	840 (29,700)	9.6	11.4	1.0	20.0	- - - -	1,620 (57,200)	(old) 3,330 (117,600)	4.3	15.4
										(new) 935 (33,100)	6.2	13.2
24	New flash furnace and old converters	2,046 (2,250)	- - - -	- -	- -	75.0	7.5	- - - -	295 (10,400)	2,220 (78,500)	4.3	16.5
25	New flash furnace and old converters	2,728 (3,000)	- - - -	- -	- -	75.0	7.5	- - - -	390 (13,800)	2,965 (104,600)	4.3	16.5
V FF-CV	Entire plant	1,364 (1,500)	- - - -	- -	- -	10.3	5.0	- - - -	1,570 (55,500)	1,180 (41,700)	4.3	16.1
26	Entire plant	1,636 (1,800)	- - - -	- -	- -	14.0	6.7	- - - -	1,420 (50,000)	1,415 (50,000)	4.3	16.1

[a]Material balances may not close due to rounding

[b]All flows are at 1 atm, 70° F.

[c]Based on average flows.

[d]Includes air to dilute flash furnace offgas to 11 percent SO_2

TABLE 6-9. MODEL PLANTS FOR EXPANSION OPTIONS: REPRESENTATIVE FEEDS, MATTE GRADES, AND SULFUR ELIMINATION RATES

	Model Plant				
	I	II	III	IV	V
Component, wt. %					
Copper	21.9	22.4	19.6	28.7	21.2
Iron	20.4	24.8	23	25.3	24.3
Sulfur	24.8	28.4	28.9	29.8	31
Cu/S	0.88	0.79	0.68	0.96	0.68
Matte grade	40	36	40	40	55
Sulfur eliminated, Mg/100 Mg feed					
Roaster	4.2		14		
Smelter	6.7	11.7	2.8	9.7	21.4
Converter	13.9	16.7	12.1	20.1	9.6

- Treatment in a NH_3 regenerative FGD, i.e., blending the FGD gas with other strong streams, and treatment in a sulfuric acid plant.

- Direct treatment in a DC/DA sulfuric acid plant.

Table 6-8 provides the exit gas parameters developed as the basis for analyzing each of the 26 expansion scenarios. The five model plants are shown together with their expansion scenarios. Exit gas flows for the models shown are based on SO_2 and oxygen concentrations reported by the actual smelters represented. Pertinent information on matte grades and sulfur eliminations assumed for each model is shown in Table 6-9. For oxygen enrichment and oxy-fuel scenarios, the furnace gas flows are based on maintaining a 1-percent oxygen concentration at the smelting furnace offtake (equivalent to approximately 10 percent excess oxygen). Flows to the atmosphere and sulfuric acid plant are based on 100 percent dilution from all sources; i.e., smelting furnace, waste heat boiler, and gas treatment system. Postexpansion smelting furnace flows and SO_2 concentrations for the oxygen enrichment and oxy-fuel expansion options are estimated using the mathematical model shown in Appendix K.

6.5 REFERENCES

1. Standards of Performance for New Stationary Sources: Primary Copper, Zinc, and Lead Smelters. Federal Register. January 15, 1976. pp. 2332-2341.

2. Letter, from Henderson, J. M., ASARCO, to Goodwin, D. R., U.S. Environmental Protection Agency, January 11, 1982. Response to Section 114 letter on primary copper smelters.

3. Letter from Varner, M. O., ASARCO, to Vervaert, A. E., U.S. Environmental Protection Agency, January 13, 1983. Comments on draft BID Chapters 6-8.

4. Memorandum, Massoglia, M. F., Research Triangle Institute, to Vervaert, A. E., U.S. Environmental Protection Agency, January 20, 1983. Subject: ASARCO comments on revised BID Chapters 6-8.

7. ENVIRONMENTAL IMPACT

7.1 GENERAL

This chapter identifies the beneficial and adverse environmental impacts associated with the application of the alternative control technologies selected in Chapter 6 for the control of (1) SO_2 and particulate matter at a new greenfield smelter processing high impurity materials and (2) fugitive particulate matter emissions from new multihearth roasters, smelting furnaces, and converters. The impacts addressed include those on air, water, solid waste, and energy. As outlined in Sections 6.2 and 6.4, impact assessments will be based on model plants considered representative of the domestic industry as it exists today. Detailed procedures used in estimating impacts are described in Appendix J.

7.1.1 New Greenfield High-Impurity Smelters--Process Emissions

As discussed in Chapter 6, seven control alternatives were selected for control of reverberatory furnace process streams. These represent three distinct levels of control ranging from 89 percent to 98 percent. A summary of each control alternative and corresponding performance level is shown in Table 7-1.

The baseline against which the control alternatives are compared includes a double contact/double absorption sulfuric acid plant (DC/DA) for control of multihearth roaster and converter strong SO_2 streams as required by the current NSPS, no SO_2 control on the reverberatory smelting furnace offgas streams, and hot electrostatic precipitator (ESP) control of particulate matter in the reverberatory furnace process gas stream.

In addition, two alternatives for further control of reverberatory furnace process particulate matter are assessed in the event that

TABLE 7-1. EVALUATED CONTROL OPTIONS FOR CONTROL OF PROCESS SO_2 EMISSIONS AT A GREENFIELD COPPER SMELTER (MULTIHEARTH ROASTER-REVERBERATORY SMELTING FURNACE-CONVERTER) PROCESSING HIGH-IMPURITY MATERIALS

Control alternative		Control level (%)	
		RV only	Smelterwide
I	Baseline	0	70
I-A	Blending 45 percent of RV offgas with MHR and CV off-gases followed by treatment in a DC/DA	44	83
I-B	Treatment of RV off gas in a MgO FGD. Blending of strong FGD stream with MHR and CV off-gases, followed by treatment in a DC/DA	89	95
I-C	Same as I-B except on NH_3 FGD is used	89	95
I-D	Treatment of RV offgases in a limestone FGD. MHR and CV stream to a DC/DA	90	96
I-E	Blending 100 percent of RV offgas with MHR and CV offgases followed by treatment in a DC/DA	98	98
I-F	Same as I-E except that oxygen enrichment is used to enhance SO_2 concentration of RV offgas	98	98
I--G	Same as I-E except that oxy-fuel burners are used in RV to enhance SO_2 concentration of offgas	98	98

MHR = Multihearth roaster.
RV = Reverberatory smelting furnace.
CV = Converter.
DC/DA = Double contact/double absorption sulfuric acid plant.

subsequent analysis indicates that the current exemption of reverberatory furnace processing high impurity materials should be retained. These alternatives are (1) gas cooling and cold ESP with an overall control effectiveness of 99.0 percent and (2) gas cooling and a baghouse with an overall control effectiveness of 99.7 percent.

7.1.2 New Greenfield High-Impurity Smelters--Fugitive Emissions

Control alternatives and their performance levels for fugitive emission sources at a new greenfield smelter are shown in Table 7-2 for multihearth roaster-reverberatory furnace-converter (MHR-RV-CV) smelters and Table 7-3 for flash furnace-converter (FF-CV) configurations. As discussed in Chapter 6, the sources selected for possible regulation include multihearth roaster calcine discharge operations, smelting furnace matte tapping and slag skimming operations, and converter operations. Capture systems analyzed include both local and general ventilation, with collection of the captured particulate matter by fabric filters.

Baseline conditions with regard to fugitive emissions are the capture and venting to the atmosphere of fugitive emissions from the operations listed in the preceding paragraph.

7.2 AIR POLLUTION IMPACT

7.2.1 SO_2 Controls for Reverberatory Smelting Furnaces

Table 7-4 summarizes the SO_2 emission impact of each of the control alternatives for new reverberatory smelting furnaces in the MHR-RV-CV configuration.

As shown in Table 7-4, the annual reduction in SO_2 emissions from the baseline case for reverberatory furnaces in the MHR-RV-CV configuration ranges from 32,450 Mg (35,700 tons) per year for Alternative IA (45 percent blending) to 72,110 Mg (79,320 tons) per year for Alternatives IE (100 percent blending), IF (oxygen enrichment), and IG (oxy-fuel). Corresponding emission reductions on the reverberatory furnace only are 44.2 and 98.3 percent, respectively, and for the entire smelter, 82.9 and 98.3 percent, respectively. Also shown in Table 7-4 are annual emission reductions expressed as kilograms SO_2 per megagram

TABLE 7-2. EVALUATED ALTERNATIVES FOR CONTROL OF FUGITIVE PARTICULATE EMISSIONS AT A GREENFIELD COPPER SMELTER PROCESSING HIGH-IMPURITY MATERIALS (MULTIHEARTH ROASTER-REVERBERATORY SMELTING FURNACE-CONVERTER)

Control alternative	Converter: blowing, charging, skimming and pouring	Multihearth roaster: calcine discharge	Reverberatory furnace: matte and slag skimming
II baseline	Capture by air curtain and secondary enclosure, no collection	Capture by larry car interlock and local hooding, no collection	Capture by local hooding, ladle hoods, launder covers, no collection
IIA	Capture, baghouse	Capture, no collection	Capture, no collection
IIB	Capture, baghouse	Capture, baghouse	Capture, no collection
IIC	Capture, baghouse	Capture, baghouse	Capture, baghouse
IID	Building evacuation, baghouse	Capture, no collection	Capture, no collection
IIE	Building evacuation, baghouse	Capture, baghouse	Capture, no collection
IIF	Building evacuation, baghouse	Capture, baghouse	Capture, baghouse

TABLE 7-3. EVALUATED ALTERNATIVES FOR CONTROL OF FUGITIVE PARTICULATE EMISSIONS AT A GREENFIELD COPPER SMELTER (FLASH FURNACE-CONVERTER)

Control alternative	Converter blowing, charging, skimming, and pouring	Flash furnace matte tapping and slag skimming
III baseline	Capture by air curtain and secondary enclosure. No collection	Capture by local hooding, ladle hoods, launder covers, no collection
IIIA	Capture, baghouse	Capture, no collection
IIIB	Capture, baghouse	Capture, baghouse
IIIC	Building evacuation, baghouse	Capture, no collection
IIID	Building evacuation, baghouse	Capture, baghouse

TABLE 7-4. AIR POLLUTION EMISSION IMPACT OF SO_2 CONTROL ALTERNATIVES FOR A NEW GREENFIELD SMELTER, MULTIHEARTH ROASTER-REVERBERATORY FURNACE-CONVERTER

	Control alternatives							
	I (Baseline)	I-A	I-B	I-C	I-D	I-E	I-F	I-G
Blister copper (Mg/day)	312	312	312	312	312	312	312	312
RV only								
SO_2 emissions (Mg/year)[a]	73,360	40,910	8,460	8,460	7,340	1,250	1,250	1,250
SO_2 reduction (Mg/year)[a]	0	32,450	64,900	64,900	66,020	72,110	72,110	72,110
SO_2 reduction (kg/Mg blister copper)	0	296	593	593	603	659	659	659
Control (%) RV only	0	44.2	88.5	88.5	90.0	98.3	98.3	98.3
MHR-RV-CV								
SO_2 emissions (Mg/year)[a]	76,600	44,050	11,590	11,590	10,470	4,380	4,380	4,380
SO_2 control (%)	70.3	82.9	95.5	95.5	95.9	98.3	98.3	98.3

MHR = Multihearth roaster.
RV = Reverberatory smelting furnace.
CV = Converter.

[a]Controlled emissions based on 350 days operation per year.

of blister copper. Using these data, estimates of emission reductions resulting from different size smelters can be made.

7.2.2 Fugitive Particulate Emissions

Table 7-5 summarizes the air pollution fugitive particulate emission impacts of each of the control alternatives for fugitive emissions from the new MHR-RV-CV and FF-CV smelter configurations. Reduction in fugitive particulate matter emissions ranges from 0.6 kg/Mg of blister to 9.4 kg/Mg with reduction for converter operations at the high end of this range and smelting furnaces at the low. Because of the higher capture efficiency, systems employing building evacuation result in a slightly higher reduction for converters than do air-curtain systems. Reductions in fugitive particulate matter emissions per unit of blister produced are lower for smelters employing flash smelting technology because of lower fugitive emissions prior to control.

7.2.3 Expansion Scenarios

There is no change in SO_2 emissions to the atmosphere from smelting furnaces under any of the expansion scenarios because the control alternatives are designed to reduce postexpansion process emissions from the smelting furnace to preexpansion levels. However, there is an increase in SO_2 and particulate process emissions from the roasters and/or converters and for scenarios in which expansion occurs by conversion to flash smelting. For the 20-percent expansion options (Scenarios 1-10, 16-22, 26), the increased emissions from the roasters and/or converters would not require control under the modification provisions because the increased throughput is considered to be within the design characteristics of the equipment and therefore not subject to NSPS. For the expansion scenarios requiring a new roaster and/or converter (Scenarios 11-15, 23), the SO_2 process emissions from the new roasters and/or converters are subject to the limitations of the existing NSPS and must be controlled to NSPS level. For the scenarios involving conversion to flash smelting (Scenarios 5, 6, 16, 17, 22, 24, and 25), the new flash furnaces are subject to the limitations of the existing NSPS and must be controlled to NSPS level.

TABLE 7-5. AIR POLLUTION FUGITIVE PARTICULATE EMISSION IMPACT FOR EACH SOURCE AND CONTROL ALTERNATIVES--NEW GREENFIELD SMELTERS[a]

	MHR-RV-CV configuration	FF-CV configuration
Blister copper (Mg/day)	312	312
Multihearth Roasters		
Number	6.0	0.0
Fugitive particulate emissions (total)		
Baseline (Mg/yr)[b]	568	NA
Controlled (Mg/yr)[c]	62	NA
Reduction (Mg/yr)	506	NA
Control (%)	89	NA
Reduction (kg/Mg blister)	4.6	NA
Smelting Furnace		
Number	1.0	1.0
Fugitive particulate emissions (total)		
Baseline (Mg/yr)[d]	71	66
Controlled (Mg/yr)[e]	8	12
Reduction (Mg/yr)	63	54
Control (%)	89	89
Reduction (kg/Mg blister)	0.6	0.5
Converters		
Number	4.0	4.0
Fugitive particulate emissions (total)		
Baseline (Mg/yr)[f]	1,092	798
Air Curtain		
Controlled (Mg/yr)[g]	119	87
Reduction (Mg/yr)	973	711
Control (%)	89	89
Reduction (kg/Mg blister)	8.9	6.5
Building Evacuation		
Controlled (Mg/yr)[h]	64	47
Reduction (Mg/yr)	1,028	751
Control (%)	94	94
Reduction (kg/Mg blister)	9.4	6.9

MHR = Multihearth roaster.
RV = Reverberatory smelting furnace.
CV = Converter.
FF = Flash furnace.

[a]Based on 350 days operation per year. Capture and venting of fugitive particulate emissions to the atmosphere through a stack will result in reduction of local ambient SO_2 concentration.

[b]Capture by larry car interlock and local hooding. No collection.

[c]Capture by larry car interlock and local hooding. Collection by baghouse.

[d]Capture by local hooding, ladle hoods, launder covers. No collection.

[e]Capture by local hooding, ladle hoods, launder covers. Collection by baghouse.

[f]Captured by air curtain and secondary hood. No collection.

[g]Capture by air curtain and secondary hood. Collection by baghouse.

[h]Capture by building evacuation. Collection by baghouse. No reduction in fugitive SO_2 emissions.

As with process emissions from the 20-percent expansion options, any increase in fugitive SO_2 and particulate emissions from roasters and/or converters would not require control that may be recommended under a revised NSPS. Under the 20-percent expansion scenarios, the increased throughput is considered to be within the design characteristics of the equipment and therefore not subject to the NSPS. However, the increased capacity of the smelting furnace is not within the design characteristics and would therefore be subject to a revised NSPS including limits on furnace tapping operation. Converters for the expansion scenarios involving conversion to flash smelting would not be subject to any fugitive emission limitations that might be included in a revised NSPS because no capital expenditure is required and no operational or physical change in the converting process occurs. For the expansion scenarios requiring the addition of new equipment, the new roaster and/or converter as well as the expanded smelting furnace would be subject to any fugitive emission limitations that might be included in the revised NSPS.

Reduction in fugitive particulate emissions for the expansion scenarios are shown in Table 7-6. These reductions are from the baseline, which has no capture or collection system for fugitive emissions.

7.3 WATER POLLUTION IMPACT

Potentially significant sources of water pollution associated with the control of weak SO_2 offgases from reverberatory smelting furnaces are the following:

- Gas cleaning and conditioning systems associated with contact sulfuric acid plants and flue gas desulfurization (FGD) systems.
- Absorbent purges taken from FGD systems in order to prevent the buildup of impurities in absorbent recycle streams.

Water pollution impacts are based on neutralizing gas cleaning scrubbing water with sulfuric acid and determining stoichiometrically the volume of liquid (calculated as water) requiring disposal. A detailed methodology is presented in Appendix L.

TABLE 7-6. AIR POLLUTION FUGITIVE PARTICULATE EMISSION IMPACT FOR EXPANSION AT EXISTING SMELTERS[a]

Expansion scenario	Added blister capacity (Mg/yr)	Smelting furnace Emissions (Mg/yr) Baseline[b]	Controlled[c]	Reduction	Reduction (kg/Mg blister)	Converter Emissions (Mg/yr) Baseline[d]	Controlled[e]	Reduction	Reduction (kg/Mg blister)
1-4	20,910	80	10	70	3.5	f	f	f	f
5	52,270	95	10	85	1.6	f	f	f	f
6	104,550	125	15	110	1.1	f	f	f	f
7-10	21,380	85	10	75	3.5	f	f	f	f
11-14	53,450	105	10	95	1.7	535	60	475	8.9
15	42,760	100	10	90	2.0	435	45	390	8.9
16	53,470	100	15	85	1.6	f	f	f	f
17	106,940	130	15	115	1.1	f	f	f	f
18-21	18,710	75	10	65	3.5	f	f	f	f
22	56,140	90	10	80	1.4	f	f	f	f
23	54,790	115	15	100	1.9	400	45	355	6.5
24	68,510	125	15	110	1.6	f	f	f	f
25	137,010	165	20	145	1.1	f	f	f	f
26	20,240	75	10	65	3.2	f	f	f	f

[a]Based on 350 days operation per year.

[b]Capture by local hooding at tap ports, skim ports, and ladle and launder covers. No collection.

[c]Capture by local hooding at tap ports, skim ports, and ladles an launder covers. Collection by baghouse.

[d]Capture by air curtain and secondary hood. No collection.

[e]Capture by air curtain and secondary hood. Collection by baghouse.

[f]Not applicable; no new units required.

7.3.1 Gas Cleaning and Conditioning Systems

Gas cleaning and conditioning systems normally employ one or more wet (water) scrubbers, which serve to remove particulate matter from the gas stream as well as to cool and humidify the gas stream. Since the gas streams contain SO_3, the recirculated scrubbing water actually begins to form a sulfuric acid solution that could theoretically reach 50 to 60 percent sulfuric acid if a portion was not purged and fresh makeup water added. Therefore, a portion of the scrubbing water is purged from the recirculation loop, creating a liquid effluent that must be disposed of. Common procedure involves neutralizing this liquid with limestone, which in turn produces an effluent that consists primarily of calcium sulfate ($CaSO_4$) and water. Estimates of the calcium sulfate (a solid waste) and liquid effluent (primarily water) produced by this neutralization process are presented in Table 7-7 for the greenfield smelter and in Table 7-8 for the expansion scenarios.

7.3.2 FGD Absorbent Purges

While the liquid effluent that exists after neutralization of the gas cleaning system purge will consist primarily of water, it is quite likely that the liquid will be saturated with calcium sulfate. Thus, the potential for groundwater pollution becomes evident. Adequate technology exists, however, to prevent liquids of this nature from seeping into underground and surface water supplies. Ponding has been a technique favored by a number of industries for waste disposal problems of this type and should provide for containment of the liquid effluent produced by the neutralization process. The use of impermeable pond liners--such as polyvinyl chloride, polyethylene, polypropylene, and nylons--should prevent seepage into groundwater supplies, while proper closed-loop operation of the ponds will prevent pond liquor overflow that could contaminate surface water supplies.

Similar situations would exist where the liquids generated by FGD absorbent purges are involved. In the case of the nonregenerative lime/limestone scrubbing system, the liquid effluent produced would be similar in nature to that produced by the neutralization procedure discussed above. Estimates of the amount of liquid generated by this source are presented in Table 7-9 for the greenfield smelter and in

TABLE 7-7. ESTIMATED PRODUCTION RATE OF SOLID AND LIQUID EFFLUENTS REQUIRING DISPOSAL FROM GAS CLEANING AND CONDITIONING EQUIPMENT, GREENFIELD SMELTERS

	Volume of gases to acid plant[a], Nm^3/min, (scfm)	Effluent production rate associated with gas cleaning and conditioning in acid plant, Mg/yr		FGD system employed			Effluent production rate associated with gas cleaning and conditioning in FGD systems, Mg/yr		Total effluent production rate, Mg/yr		Incremental increase in in effluent production relative to the base case, Mg/yr	
		$CaSO_4$	Liquid	Type	Design flow rate Nm^3/min, (scfm)		$CaSO_4$	Liquid	$CaSO_4$	Liquid	$CaSO_4$	Liquid
Base Case	2,440 (86,200)	2	14	NA	NA	NA	0	0	2	14	--	--
I-A	3,920 (138,400)	4	23	NA	NA	NA	0	0	4	23	2	9
I-B	2,935 (103,600)	3	17	MgO	3,315	(117,000)	3	19	6	36	4	22
I-C	2,635 (93,100)	2	16	NH_3	3,315	(117,000)	3	19	5	35	3	21
I-D	2,440 (90,000)	2	14	Lime-stone	3,315	(117,000)	2	16	4	30	2	16
I-E	5,730 (202,300)	5	34	NA	NA	NA	0	0	5	34	3	20
I-F	4,470 (168,400)	4	28	NA	NA	NA	0	0	4	28	2	14
I-G	3,725 (131,500)	3	22	NA	NA	NA	0	0	3	22	1	8

NA = Not Applicable

[a]Based on average converter offgas flows.

TABLE 7-8. ESTIMATED INCREMENTAL INCREASE IN EFFLUENTS REQUIRING DISPOSAL FROM GAS CLEANING AND CONDITIONING EQUIPMENT, EXPANSION OPTIONS

	Volume of gases to be treated in acid plants, Nm^3/min (scfm)		Effluent production rate associated with gas cleaning and conditioning in acid plants, Mg/yr				New FGD requirements			Effluent production rate associated with gas cleaning and conditioning in FGD systems, Mg/yr		Total pre-expansion effluent production rate, Mg/yr		Total post-expansion effluent production rate, Mg/yr		Incremental increase in effluent production, Mg/yr	
			Preexpansion		Postexpansion												
	Preexpansion	Postexpansion	$CaSO_4$	Liquid	$CaSO_4$	Liquid	Type	Design flow rate, Nm^3/min (scfm)		$CaSO_4$	Liquid	$CaSO_4$	Liquid	$CaSO_4$	Liquid	$CaSO_4$	Liquid
Base Case I	2,305 (81,300)	2,305 (81,300)	2	14	2	14	NA	NA	NA	0	0	2	14	2	14	--	--
1	2,305 (81,300)	3,660 (129,180)	2	14	3	22	NA	NA	NA	0	0	2	14	3	22	1	6
2	2,305 (81,300)	2,765 (97,600)	2	14	3	16	$CaCO_3$	940 (33,400)		1	4	2	14	4	20	1	6
3	2,305 (81,300)	2,860 (101,100)	2	14	3	17	MgO	990 (35,000)		1	5	2	14	4	22	1	8
4	2,305 (81,300)	2,800 (99,000)	2	14	3	17	NH_3	990 (35,000)		1	5	2	14	4	22	1	8
5	2,305 (81,300)	3,510 (124,000)	2	14	3	21	NA	NA	NA	0	0	2	14	3	21	1	7
6	2,305 (81,300)	4,685 (165,200)	2	14	4	28	NA	NA	NA	0	0	2	14	4	28	2	14
Base Case II	2,775 (98,000)	2,775 (98,000)	3	16	3	16	NA	NA	NA	0	0	3	16	3	16	--	--
7	2,775 (98,000)	4,220 (149,100)	3	16	4	25	NA	NA	NA	0	0	3	16	4	25	1	9
8	2,775 (98,000)	3,330 (117,600)	3	16	3	20	$CaCO_3$	940 (33,400)		1	5	3	16	4	25	1	9
9	2,775 (98,000)	3,505 (123,700)	3	16	3	21	MgO	990 (35,000)		1	6	3	16	4	27	1	11
10	2,775 (98,000)	3,400 (120,000)	3	16	3	20	NH_3	990 (35,000)		1	6	3	16	4	26	1	10
11	2,775 (98,000)	5,185 (183,100)	3	16	5	31	NA	NA	NA	0	0	3	16	5	31	2	15
12	2,775 (98,000)	3,745 (132,200)	3	16	3	22	$CaCO_3$	1,555 (54,900)		1	8	3	16	6	30	3	14
13	2,775 (98,000)	4,175 (147,300)	3	16	4	25	MgO	1,600 (56,500)		1	9	3	16	7	34	4	18
14	2,775 (98,000)	3,915 (138,200)	3	16	4	23	NH_3	1,600 (56,500)		1	9	3	16	7	32	4	16
15	2,775 (98,000)	4,365 (154,200)	3	16	4	26	NA	NA	NA	0	0	3	16	7	26	4	10
16	2,775 (98,000)	4,010 (141,700)	3	16	4	23	NA	NA	NA	0	0	3	16	4	23	1	7
17	2,775 (98,000)	5,350 (187,800)	3	16	6	30	NA	NA	NA	0	0	3	16	6	30	3	14
Base Case III	2,365 (83,500)	2,365 (83,500)	2	14	2	14	NA	NA	NA	0	0	2	14	2	14	--	--
18	2,365 (83,500)	3,585 (126,700)	2	14	3	21	NA	NA	NA	0	0	2	14	3	21	1	7
19	2,365 (83,500)	2,840 (100,300)	2	14	3	17	$CaCO_3$	790 (27,900)		1	4	2	14	4	21	2	7
20	2,365 (83,500)	2,880 (101,700)	2	14	3	17	MgO	830 (29,300)		1	5	2	14	4	22	2	8
21	2,365 (83,500)	2,855 (100,800)	2	14	3	17	NH_3	830 (29,300)		1	5	2	14	4	22	2	8
22	2,365 (83,500)	4,345 (153,400)	2	14	4	26	NA	NA	NA	0	0	2	14	4	26	2	12
Base Case IV	4,485 (158,400)	4,485 (158,400)	4	26	4	26	NA	NA	NA	0	0	4	26	4	26	--	--
23	4,485 (158,400)	6,730 (237,000)	4	26	6	40	NA	NA	NA	0	0	4	26	6	40	2	14
24	4,485 (158,400)	3,240 (114,500)	4	26	3	19	NA	NA	NA	0	0	4	26	3	19	(1)	(7)
25	4,485 (158,400)	4,325 (152,700)	4	26	4	26	NA	NA	NA	0	0	4	26	4	26	0	0
Base Case V	2,750 (97,100)	2,810 (99,200)	3	16	3	16	NA	NA	NA	0	0	2	16	3	16	--	--
26	2,750 (97,100)	2,890 (102,100)	3	16	3	17	NA	NA	NA	0	0	2	16	3	17	1	1

NA = Not applicable

TABLE 7-9. ESTIMATED PRODUCTION RATE OF SOLID AND LIQUID EFFLUENTS REQUIRING DISPOSAL FROM FGD SYSTEMS ASSOCIATED WITH GREENFIELD SMELTER MODELS

Control alternative	Type of FGD system employed	Solid waste production rate, Mg/yr (tons/yr)	Liquid waste production rate, Mg/yr (tons/yr)
I-B	MgO	6,300[a] (6,930)	332,600[b] (365,800)
I-D	Limestone	406,500[c] (447,200)	2,402,300[d] (2,642,500)

[a]Calculated assuming the solids consist only of $MgSO_3$. In reality, some $MgSO_4$ as well as other magnesium species will exist in the solids.

[b]Estimated assuming that the total effluent requiring ponding is 2-percent solids by weight.

[c]Estimated based upon a sludge ($CaSO_3$) production rate of 6 to 7 kg per kg SO_2 absorbed.

[d]Estimated assuming that the total effluent requiring ponding is 15-percent solids by weight.

TABLE 7-10. ESTIMATED PRODUCTION RATE OF SOLID AND LIQUID EFFLUENTS REQUIRING DISPOSAL FROM FGD SYSTEMS ASSOCIATED WITH EXPANSION OPTIONS

Expansion option	Type of FGD system employed	Solid waste production rate, Mg/yr (tons/yr)		Liquid waste production rate, Mg/yr (tons/yr)	
2	Limestone	77,000[a]	(84,700)	455,000[b]	(500,500)
3	MgO	1,250[c]	(1,380)	62,600[d]	(68,900)
8	Limestone	133,200[a]	(146,500)	787,100[b]	(865,800)
9	MgO	2,170[c]	(2,380)	108,400[d]	(119,200)
12	Limestone	333,800[a]	(367,200)	1,972,600[b]	(2,169,900)
13	MgO	5,300[c]	(5,850)	265,900[d]	(292,500)
19	Limestone	31,900[a]	(35,100)	188,400[b]	(207,300)
20	MgO	520[c]	(570)	25,900[d]	(28,500)

[a]Estimated based upon a sludge ($CaSO_3$) generation rate of 6 kg per kg SO_2 absorbed.

[b]Estimated assuming that the total effluent requiring ponding is 15 percent solids by weight.

[c]Calculated assuming the solids consist only of $MgSO_3$. In reality, some $MgSO_4$ as well as other magnesium species will exist in the solids.

[d]Estimated assuming that the total effluent requiring ponding is 2 percent solids by weight.

Table 7-10 for the expansion scenarios. Although this liquid is recycled to the absorbent makeup tank, it must be ponded temporarily for the associated sludge to settle out. The lined pond required for sludge disposal (see Section 7.4) will provide adequate containment of any dissolved species that might adversely affect water quality.

The purge taken from the MAGOX scrubbing system will consist of a liquid in equilibrium with several magnesium species. Thus, since dissolved magnesium salts are known to affect water quality in terms of increasing its "hardness," the potential for certain problems does exist. Disposal of this liquid by ponding, with the use of impermeable liners, should provide acceptable containment, however. Estimates of the amount of liquid requiring disposal due to the purging of the MAGOX FGD systems are presented in Tables 7-9 and 7-10.

Since no absorbent purge is required from the Cominco NH_3 scrubbing process, purging will not be a potential source of pollution. A portion of the loaded absorbent stream is continuously bled off to provide a feedstock for the acidulation reactor. This practice, in effect, provides the required purge for the absorbent recycle circuit.

In summary, ponding is an acceptable means of disposal for all of the above mentioned liquid effluents. There is, however, a solid waste product associated with each of the liquid effluents discussed above. Disposal of solid wastes is discussed in Section 7.4.

7.4 SOLID WASTE IMPACT

The significant sources of solid waste are the following:

- Sludge produced by the calcium-based nonregenerative scrubbing system.
- Sludge produced by the neutralization of purges from gas cleaning and conditioning systems.
- Solids in the purge taken from the MAGOX regenerative FGD system.
- Baghouse and ESP dusts not recycled.

Methodology used in estimating solid waste impacts is presented in Appendix L.

7.4.1 Calcium Based FGD's

In terms of magnitude, the sludge (primarily $CaSO_3$) produced by the calcium-based FGD's would represent the most significant solid waste disposal problem. Thus sludge is produced at the rate of 6 to 7 kg/kg of SO_2 absorbed, and generally has poor disposal properties. The calcium sulfite sludge tends to maintain a "swampy" consistency for long periods of time following ponding. Consequently, settling can be quite difficult and the space requirements for settling may be quite large. Ponding in lined ponds is, however, an acceptable means by which to dispose of the calcium sulfite sludge. The pond must be lined because of the potential for groundwater pollution by leachates. Estimates of solid waste disposal requirements for the calcium-based FGD's are presented in Table 7-9 for the high-impurity greenfield smelter and in Table 7-10 for the expansion scenarios.

7.4.2 Gas Cleaning Purges

The neutralization procedure involved in processing the weak acid purge from gas cleaning and conditioning systems produces calcium sulfate ($CaSO_4$). This material is similar in nature, however, to the calcium sulfite sludge produced by the calcium-based (limestone) scrubbing system. Consequently, this material could also be ponded. The addition of the calcium sulfate sludge to the calcium sulfite sludge produced by the scrubbing systems may, in fact, improve the disposal properties of the calcium sulfite, which, as noted previously, tends to maintain a "swampy" consistency for long periods of time after ponding. Estimates of the amount of calcium sulfate generated by the neutralization procedure are presented in Tables 7-7 and 7-8.

At this point, it should be noted that the particulate matter contained in the liquid effluent taken from gas cleaning systems may also be ponded in the event that the dusts are not reclaimed. Impermeable pond liners may be required, of course, to prevent the transport of harmful species such as As_2O_3 into the groundwater. Some operators may, however, wish to recover these dusts from the liquid effluent in order to recover metal values.

The purge taken from the absorbent recirculation circuit of the MAGOX scrubbing process also contains a solid waste that must be

disposed of. These solids consist primarily of hydrated crystals, e.g., $MgSO_3 \cdot 3H_2O$, $MgSO_3 \cdot 6H_2O$, and $MgSO_4 \cdot 7H_2O$. MgO may also be present in the solids. Magnesium species such as these will adversely affect water quality if allowed to enter the groundwater. However, once again, a lined pond would provide an acceptable means of disposal.

7.4.3 Particulate Control on Reverberatory Smelting Furnaces

As discussed in Section 6.3, a hot ESP is included in the baseline; cold particulate matte removal systems are included in the control alternatives. Thus, the following control alternatives are considered:

- Gas-stream temperature reduction by evaporative cooling with a cold ESP for particulate collection
- Gas-stream temperature reduction by evaporative cooling with a cold fabric filter for particulate collection.

Copper-bearing dusts captured by hot ESP's are recycled to recover metal values; however, at smelters that use cold control only, it is possible that recycling all of the dusts captured by the cold control device to the smelting furnace may prove to be impractical because of the impurities content, as discussed above. Consequently, a potential solid waste disposal problem becomes evident. The metallic species in these dusts are very toxic to humans;* thus, the dusts are considered to be hazardous wastes. If dusts of this nature were not recycled or reprocessed, they would have to be disposed of in a manner that would prevent entry into the atmosphere or the groundwater. Ponding or burial, however, using impermeable liners should provide adequate containment of the toxic species. The incremental impacts of reverberatory furnace particulate matter control with cold (90 to 100° C [195° to 212° F]) control devices (ESP or fabric filter) have been estimated, based on a material balance, for the high-impurity greenfield smelter and are presented in Table 7-11.

---

*Arsenic, antimony, lead, cadmium, zinc and their compounds are listed on the Hazardous Waste List compiled by U.S. Environmental Protection Agency (EPA).

TABLE 7-11. ESTIMATE OF EMISSION REDUCTION DUE TO PARTICULATE CONTROL OF REVERBERATORY SMELTING FURNACE PRIMARY OFFGASES--HIGH-IMPURITY GREENFIELD SMELTER

	Gas stream volumetric flow rate		Cooling water rate,[a] m^3/min (gal/min)	Particulate mass rate to control device,[b] Mg/yr (tons/yr)	Total particulate emission rate[b] to atmosphere, Mg/yr (tons/yr)	Emission reduction Mg/yr (tons/yr)
	Before cooling, Nm^3/min (scfm)	After cooling,[a] Nm^3/min (scfm)				
Baseline	3,290 (116,200)	NA	NA	17,080 (18,790)	12,470[c] (13,710)	- - - -
ESP[d]	3,290 (116,200)	4,145 (146,400)	0.73 (190)	17,080 (18,790)	560 (620)	11,910 (13,090)
Fabric filter[e]	3,290 (116,200)	4,145 (146,400)	0.73 (190)	17,080 (18,790)	50 (55)	12,420 (13,655)

[a]Based upon the use of evaporative cooling to reduce the reverberatory furnace offgas temperature from about 400° C to about 100° C.

[b]Measured by reference method 5.

[c]Based on impurities in feed as shown in Table 6-1, distribution of impurities as shown in Table 3-10, and net ESP efficiency of 96.7 percent of particulate matter in solid state at 400° C.

[d]Judged to be capable of achieving a 96.7-percent overall collection efficiency.

[e]Judged to be capable of achieving a 99.7-percent overall collection efficiency.

7.5 ENERGY IMPACT

The incremental energy requirements for the control alternatives are the result of increased fan requirements for moving the offgases through the emission control systems, increased electricity requirements for ESP's used in gas cleaning, additional heat requirements in the emission control system (e.g., supplemental heat for acid plants), and regeneration of MgO in the MAGOX FGD. For the expansion scenarios, additional energy is required for these activities to accommodate the increased throughput resulting from expansion of existing smelter capacity.

7.5.1 New Greenfield Smelters--Process Emissions

Total and incremental energy requirements for the alternatives for controlling SO_2 streams from reverberatory smelting furnaces are shown in Table 7-12. For the baseline, the process energy requirement is $1,510 \times 10^3$ GJ/yr while the energy required for the control of roasters and converters is 585×10^3 GJ/yr. Thus, the total energy requirement is $2,095 \times 10^3$ GJ/yr, as indicated in Table 7-12. Incremental energy requirements range from a reduction of 469×10^3 GJ/yr for Alternative I-G to an increased requirement of 654 GJ for Alternative I-B. These incremental energy requirements result in total energy requirements of $1,626 \times 10^3$ GJ/yr and $2,749 \times 10^3$ GJ/yr for Alternatives I-G and I-B, respectively. Alternative I-G requires 906×10^3 GJ/yr of process-related energy and 720×10^3 GJ/yr of control-related energy, while Alternative I-B requires $2,100 \times 10^3$ GJ/yr of process-related energy and 649×10^3 GJ/yr of control-related energy.

7.5.2 New Greenfield Smelters--Fugitive Emissions

Incremental energy requirements for the control of fugitive emissions from new greenfield smelters are shown in Table 7-13.

7.5.3 Expansion Scenarios

Incremental energy requirements for each of the expansion scenarios, expressed as gigajoules per increased blister copper capacity, are shown in Table 7-14. Expansion scenarios that include a MAGOX FGD require more energy than other scenarios, primarily because of the high energy requirements for regenerating the MgO.

TABLE 7-12. ENERGY IMPACT--PROCESS SO_2 CONTROL ALTERNATIVES FOR NEW GREENFIELD SMELTER, MULTIHEARTH ROASTER-REVERBERATORY FURNACE-CONVERTER[a]

	Control alternative							
	I (Baseline)	I-A	I-B	I-C	I-D	I-E	I-F	I-G
Control system		45 percent blending	MgO FGD	NH_3 FGD	Limestone FGD	100 percent blending	Oxygen enrich-ment	Oxy-fuel burners
Total energy requirement[b] (10^3 GJ/yr)	2,095	2,342	2,749	2,294	2,118	2,657	2,130	1,626
Incremental energy requirement (10^3 GJ/yr)		247	654	199	23	562	35	(469)
Incremental energy requirement (GJ/Mg blister copper)		2.26	5.99	1.82	0.21	5.15	0.32	(4.29)

[a]Based on blister copper production of 312 Mg/day, 350 days operation per year.

[b]Includes process and control system energy requirement.

Note: Numbers in parentheses represent decreases in energy requirements.

TABLE 7-13. INCREMENTAL ENERGY IMPACT--FUGITIVE EMISSION CONTROL ALTERNATIVES FOR NEW GREENFIELD SMELTERS[a]

	MHR-RV-CV configuration	FF-CV configuration
Blister copper (Mg/yr)	312	312
Multihearth Roasters		
Number	6.0	0
Energy requirements[a]		
Base Case (GJ/yr)[b]	2.4	NA
Controlled (GJ/yr)[c]	4.5	NA
Incremental (GJ/yr)	2.1	NA
Incremental (10^3 J/Mg blister)	19.5	NA
Smelting furnace		
Number	1.0	1.0
Energy requirements[a]		
Base Case (GJ/yr)[d]	3.1	2.1
Controlled (GJ/yr)[e]	5.9	4.1
Incremental (GJ/yr)	2.8	2.0
Incremental (10^3 J/Mg blister)	25.4	17.6
Converter		
Number	4	4
Air curtain		
Energy requirements[a]		
Base Case (GJ/yr)[f]	9.5	9.5
Controlled (GJ/yr)[g]	18.0	18.0
Incremental (GJ/yr)	8.5	8.5
Incremental (10^3 J/Mg blister)	78.0	69.0
Building evacuation		
Energy requirements[a]		
Base Case (GJ/yr)[f]	9.5	9.5
Controlled (GJ/yr)[h]	67.5	67.5
Incremental (GJ/yr)	58.4	58.4
Incremental (10^3 J/Mg blister)	530.6	530.6

MHR = Multihearth roaster.
RV = Reverberatory smelting furnace.
CV = Converter.
FF = Flash furnace.

[a]Includes only energy requirements for capture and collection.

[b]Capture by local hooding and larry car interlock. No collection.

[c]Capture by local hooding and larry car interlock. Collection by baghouse.

[d]Capture by local hooding, tap and skim ports, ladle and launder covers. No collection.

[e]Capture by local hooding, tap and skim ports, ladle and launder covers. No collection.

[f]Capture by air curtain and secondary hood. No collection.

[g]Capture by air curtain and secondary hood. Collection by baghouse.

[h]Capture by building evacuation. Collection by baghouse.

TABLE 7-14. ENERGY IMPACTS--EXPANSION SCENARIOS FOR EXISTING PRIMARY COPPER SMELTERS

Expansion scenario	Expanded capacity blister copper (Mg/yr)	Incremental energy requirements over baseline (10^3 GJ/yr)				Incremental energy requirement (GJ/Mg blister copper)
		Electricity	Natural Gas	Fuel oil	Total	
1	20,910	142	23	54	219	10.5
2	20,910	90	0	54	144	6.9
3	20,910	91	0	169	260	12.5
4	20,910	123	0	54	177	8.5
5	52,270	471	0	(2,326)	(1,855)	(35.5)
6	104,540	621	0	(2,326)	(1,705)	(16.3)
7	21,380	140	5	(25)	120	5.6
8	21,380	98	0	(25)	73	3.4
9	21,380	100	0	(183)	283	13.2
10	21,380	158	0	(25)	133	6.2
11	53,450	403	0	(157)	246	4.6
12	53,450	223	0	(157)	66	1.2
13	53,450	275	0	347	622	11.6
14	53,450	399	0	(157)	242	4.5
15	42,760	263	0	606	869	20.3
16	53,450	536	0	(2,439)	(1,957)	(36.6)
17	106,910	705	0	(2,439)	(1,734)	(16.2)
18	18,710	98	0	(241)	(143)	(7.7)
19	18,710	55	0	(241)	(186)	(10.0)
20	18,710	47	0	(146)	(99)	(5.3)
21	18,710	67	0	(241)	(1,734)	(9.3)
22	56,310	579	0	(2,144)	(1,565)	(27.9)
23	54,790	414	0	580	994	18.1
24	68,510	479	0	0	479	7.0
25	137,010	640	0	0	640	4.7
26	20,240	100	0	(25)	75	3.7

Note: Numbers in parentheses represent decreases in energy requirements.

8. COSTS

8.1 INTRODUCTION

This chapter presents capital, operating, and annualized costs for controlling (1) weak SO_2 streams from greenfield reverberatory smelting furnaces processing high-impurity materials; (2) fugitive emissions from new, modified, or reconstructed roasters; smelting furnaces; and converters; (3) particulate matter emissions from reverberatory smelting furnaces processing high-impurity materials if the existing reverberatory exemption is retained; and (4) SO_2 emissions from expanded reverberatory smelting furnaces at existing smelters. These cost data are used to determine cost-effectiveness of the control alternatives identified in Chapter 6. Based on the cost-effectiveness determinations, selected control alternatives are carried forward for determining economic impact in Chapter 9. The control options are summarized in Table 8-1.

Process and control installed capital costs, operating costs, and annualized costs are estimated and effectiveness of the control alternatives determined as part of the cost analysis.* For new greenfield smelters, capital, operating, and annualized costs are estimated for the entire smelter for the Baseline Case and each of the control alternatives. Incremental costs for each of the control alternatives are then determined by subtracting the baseline costs from the control alternative costs. For fugitive particulate matter control, particulate matter control for exempted reverberatory furnaces, and expansion scenarios, a different approach is followed. For these cases, incremental process and control costs are estimated directly.

---

*Annualized costs, the sum of operating costs and capital recovery costs, are computed with the methodology described in Section 8.2.2.

TABLE 8-1. CONTROL ALTERNATIVES

Alternative	Description[a]
Baseline Case	Processing MHR and CV gases in a DC/DA sulfuric acid plant and venting the reverberatory furnace offgas stream to the atmosphere.
I-A	Blending 45 percent of the RV offgas stream with the MHR and CV offgas streams, processing this blended stream in DC/DA sulfuric acid plant, and treating the remaining RV offgas stream with a coldside ESP.
I-B	Processing the weak RV offgas stream with a MgO regenerative FGD system, blending the strong SO_2 stream from the MgO FGD system with the MHR and CV offgas streams, and processing the total blended stream in a DC/DA sulfuric acid plant.
I-C	Identical to Alternative I-B except a NH_3 FGD system is used in place of a MgO FGD system.
I-D	Controlling the RV offgas stream with a limestone FGD system and processing the MHR and CV offgases in a DC/DA sulfuric acid plant.
I-E	Blending 100 percent of the RV offgas stream with the MHR and CV offgas streams and processing the blended stream in a DC/DA sulfuric acid plant.
I-F	Identical to Alternative I-E except that oxygen enrichment is used to enhance the SO_2 concentration of the RV offgas stream.
I-G	Identical to Alternative I-E except that oxy-fuel burners are used to enhance the SO_2 concentration of the RV offgas stream.

[a] CV = Converter.
DC/DA = Dual contact/dual absorption sulfuric acid plant.
ESP = Electrostatic precipitator.
MHR = Multihearth roaster.
RV = Reverberatory furnace.

Section 8.2 describes the cost analyses of the SO_2 control alternatives selected in Section 6.2 for greenfield reverberatory smelting furnaces, and Section 8.3 discusses alternatives for control of fugitive emissions from roasters, smelting furnaces, and converters. Section 8.4 presents the cost analysis of the particulate matter control alternatives for reverberatory smelting furnaces, and Section 8.5 contains base case costs for new greenfield smelters. Section 8.6 discusses cost analyses of expansion scenarios for existing smelters, and Section 8.7 presents cost-effectiveness summaries.

The cost estimates given in this chapter are based on cost models developed with information available in the literature. The details of each cost model and the basic sources of cost factors and similar data are discussed in detail in Section 8.2. Capital and operating costs developed herein are study grade estimates.

8.2 CONTROL OF WEAK SO_2 STREAMS FROM NEW REVERBERATORY FURNACES

This section presents the estimated costs of producing copper and controlling SO_2 in the gaseous process stream from a new reverberatory smelting furnace processing high-impurity materials. The control alternatives considered are presented in Table 8-1. The selection of these alternatives is discussed in Section 6.2.

The Baseline Case shown in Table 8-1 was used to determine the incremental cost of a revised new source performance standard (NSPS). This Baseline Case includes control of SO_2 emissions from the multihearth roaster and converter, which are covered under the existing NSPS, and control of particulate matter from the reverberatory furnace, as required by existing State Implementation Plans (SIP's). The percent SO_2 recovery for each alternative was calculated based on the application of a double contact/double absorption (DC/DA) sulfuric acid plant to the multihearth roasters and converters, with SO_2 control on the reverberatory smelting furnace.

Table 8-2 shows the flow rates, SO_2 concentrations, and supplementary heat requirements used to calculate the costs of the control alternatives for a 1,364-Mg/day (1,500-tons/day) model plant. The acid plant costs were calculated using the maximum gas flow rate and a design SO_2 concentration based on the acid plant flow profiles given in Table 6-3.

TABLE 8-2. INPUT DATA TO COST ESTIMATION, NEW HIGH-IMPURITY SMELTER

Control alternative	Acid plant data[a]		New FGD requirements				O_2 usage rate, tons/day	Supplementary heat required, GJ/24 hours
	Maximum Nm^3/min (scfm)	Design % SO_2	Type	Input Nm^3/min (scfm)		Input % SO_2		
Baseline Case	3,380 (119,400)	4.5	NA	NA	NA	NA	NA	NA
I-A	4,870 (172,000)	3.5	NA	NA	NA	NA	NA	23
I-B	3,890 (137,300)	4.5	MgO	3,315 (117,000)		1.7	NA	NA
I-C	3,580 (126,500)	4.5	NH_3	3,315 (117,000)		1.7	NA	NA
I-D	3,380 (119,400)	4.5	Limestone	3,315 (117,000)		1.7	NA	NA
I-E	6,690 (236,300)	3.5	NA	NA	NA	NA	NA	360
I-F	5,710 (201,500)	3.5	NA	NA	NA	NA	116	50
I-G	4,660 (164,600)	4.5	NA	NA	NA	NA	219	NA

NA = Not applicable.
scfm = Standard cubic feet per minute, measured at 0° C, 1 atm.

[a]All sulfuric acid plants are double contact/double absorption (see Table 6-3 for the acid plant flow profile).

8.2.1 Capital Costs

The capital costs developed in this section for each of the control alternatives shown in Table 8-1 are based on published data to which engineering judgment is applied. The design criterion for which the published costs had been developed was evaluated to ensure its applicability to the process or control alternative under analysis and its consistency with the technology presented in Chapter 4. All capital costs are escalated to June 1981 dollars using the Chemical Engineering Plant Cost Index (June 1981 = 298.2).

8.2.1.1 Baseline Case Control Costs Under the Existing NSPS.

For the Baseline Case of Table 8-1, a DC/DA acid plant is required under the existing NSPS for control of the converter and multihearth roaster process offgases. As indicated in Figure 6-1, the maximum flow rate to the DC/DA acid plant for the Baseline Case is 3,380 Nm^3/min (119,400 scfm, measured at 20° C and 1 atm), and the design SO_2 concentration is 4.5 percent. A hotside ESP controls particulate matter in furnace offgases.

Figure 8-1 shows a comparison of several published DC/DA acid plant cost estimates that have been updated to June 1981 dollars. The solid lines of Figure 8-1, obtained from Reference 1, were used to determine costs for all DC/DA sulfuric acid plants. Flow rates are at 1 atm and 0° C as used in the source material. Of the costs available for this study, those from Reference 1 are the only ones calculated over a range of flow rates and concentrations and are thus the most comprehensive available. These costs include gas cooling and conditioning, acid making, gas preheating equipment, and all ancillary facilities (electrical and utility supplies, control room, etc.). A detailed equipment list is given in Appendix D-3 of Reference 1. Reference 2 also reports costs for DC/DA acid plants. This reference shows the same trends in capital costs versus gas flow rate. Based on the capital costs reported in Reference 1, the following mathematical expression was developed relating the capital cost of an acid plant to SO_2 concentration and gas flow rate:

$$\ln \text{Cost} = I + a + b \ln Q ,$$

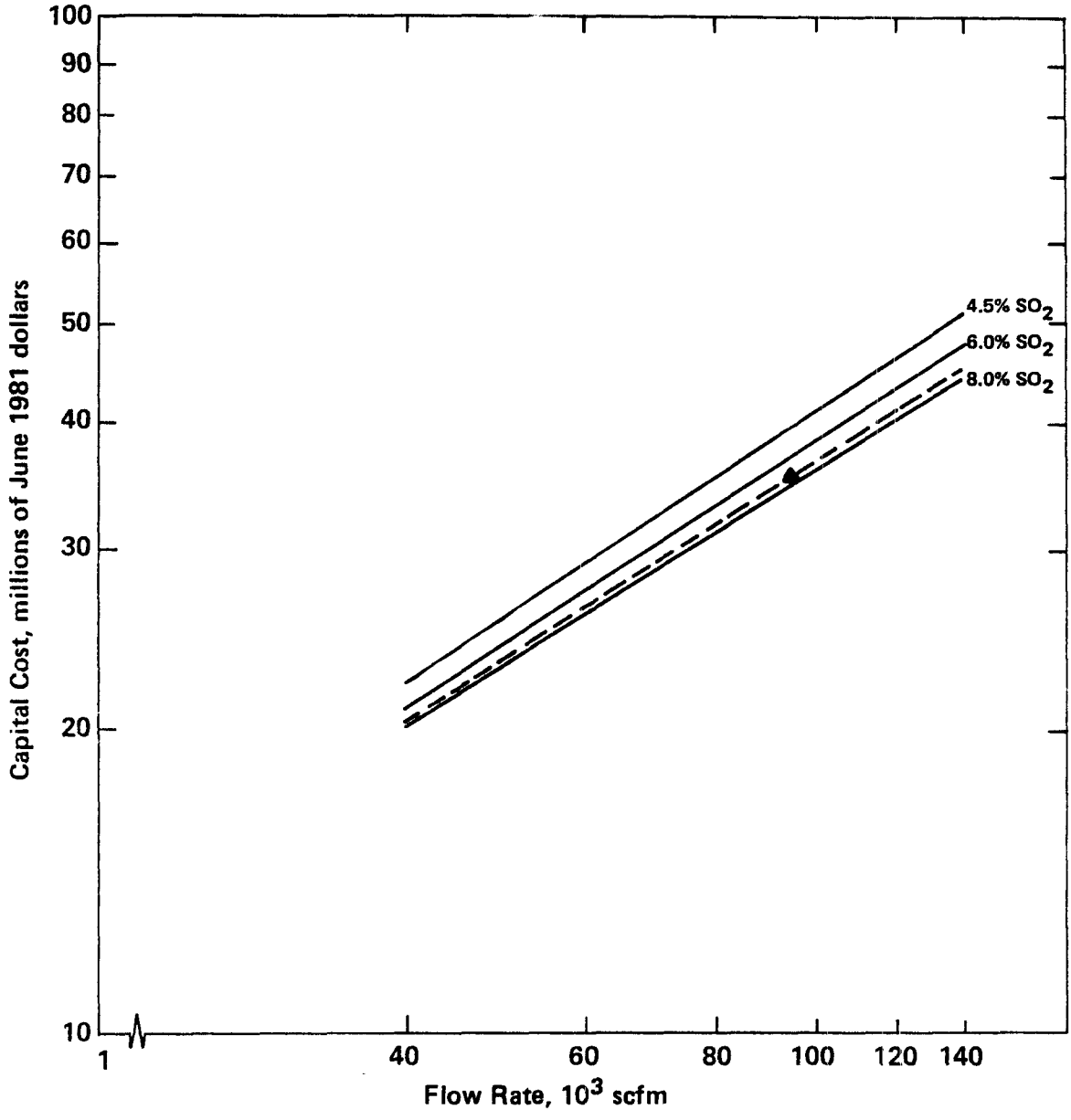

Note: Solid lines represent costs from Reference 1 and include gas cleaning and conditioning, absorption and acid production, auxiliary preheating, storage facilities, materials handling, and control equipment.

Legend

— — Costs are calculated for 4.5 percent SO_2 from data given by Reference 2.

▲ Cost is updated from Reference 3, p. 32.

Figure 8-1. Capital cost of a DC/DA sulfuric acid plant.

where

Cost is the total capital cost in millions of June 1981 dollars

I is a constant accounting for inflation

a and b are functions of the SO_2 concentration

Q is the gas flow rate in thousands of scfm (1 atm and 70° F).

Using a regression analysis of ln Q and ln Cost to calculate values of "a" and "b" and to convert from 0° C to 21° C and from scfm to Nm^3/min gives the following expression:

$$\ln \text{Cost} = 0.1325 + 0.378\ (\%\ SO_2)^{0.177} + 0.783\ (\%\ SO_2)^{-0.104}\ [\ln Q - 3.418]$$

where % SO_2 is expressed as percent; i.e., 4% SO_2 is input as 4.0. Based on this expression, the capital cost for a DC/DA sulfuric acid plant for the Baseline Case control of the roaster and converter streams is $43.8 million. The costs of a hot ESP for particulate matter control of the reverberatory furnace weak stream results in a total baseline control cost of $46.3 million (see Section 8.4.1 for estimation of ESP capital costs).

8.2.1.2 Capital Cost of Alternative I-A. Alternative I-A consists of blending 45 percent of the reverberatory furnace offgas stream with the roaster and converter streams and processing the blended stream in a DC/DA acid plant.

From Table 8-2, the maximum process flow rate for Alternative I-A is 4,870 Nm^3/min (172,000 scfm), and the design SO_2 concentration is 3.5 percent. Using this information in the equation developed in Section 8.2.1.1 yields an acid plant capital cost of $59.8 million. The cost of a hot ESP for particulate control of the remaining 55 percent of the reverberatory furnace offgas stream results in a total control cost of $61.3 million.

8.2.1.3 Capital Cost of Alternative I-B. Alternative I-B consists of an MgO regenerative flue gas desulfurization (FGD) system to process the weak reverberatory gas stream. The strong SO_2 stream from the MgO system is then blended with the roaster and converter streams and the total blended stream processed in a DC/DA sulfuric acid plant.

Figure 8-2 shows the reported capital costs of the MgO FGD system. The solid lines in this figure are the reference costs used to calculate costs herein and were obtained from Reference 4. There are differences in the MgO systems for which costs are developed in References 1, 5, and 6. Specifically, Reference 1 reports costs for two flow rates and SO_2 concentrations, and costs for spare equipment are included. The costs given by Reference 5 include a dedicated wastewater treatment plant, retrofit items specific to a certain site (stacks, piping, etc.), and primary and reclaimed storage and associated materials handling. This cost is somewhat higher than that developed for 1 percent SO_2 in Reference 4. The costs reported in Reference 6 are based on data that have been updated over a considerable time (approximately 12 to 15 years). The scope of the costs, however, is somewhat more limited than that of Reference 4 (see Figure 8-2, Note 1). For example, a baghouse is not included on the MgO storage silo and rotary drier offgas, nor is a lined cooling pond or venturi gas scrubber (the scrubber of Reference 6 is a somewhat less expensive spray tower).

The costs provided by the computer program documented in Reference 4 were used to develop the MgO system costs shown as solid lines in Figure 8-2. The following mathematical expression was developed to represent the solid lines shown in Figure 8-2:

$$\ln \text{Cost} = \ln [1.564 (\% SO_2)^{0.0926}] + [0.546 + 0.0252 (\% SO_2)] [\ln Q - 3.418].$$

where

Cost is the total capital cost in millions of June 1981 dollars,

% SO_2 is expressed as a percent, not a decimal (i.e., 4% SO_2 would be input as 4.0)

Q is in Nm^3/min.

Using the flow rate and SO_2 concentration shown in Table 8-2 for Alternative I-B, namely, 3,315 Nm^3/min (117,000 scfm) and 1.7 percent SO_2, the capital cost of the MgO system was calculated to be $26.0 million.

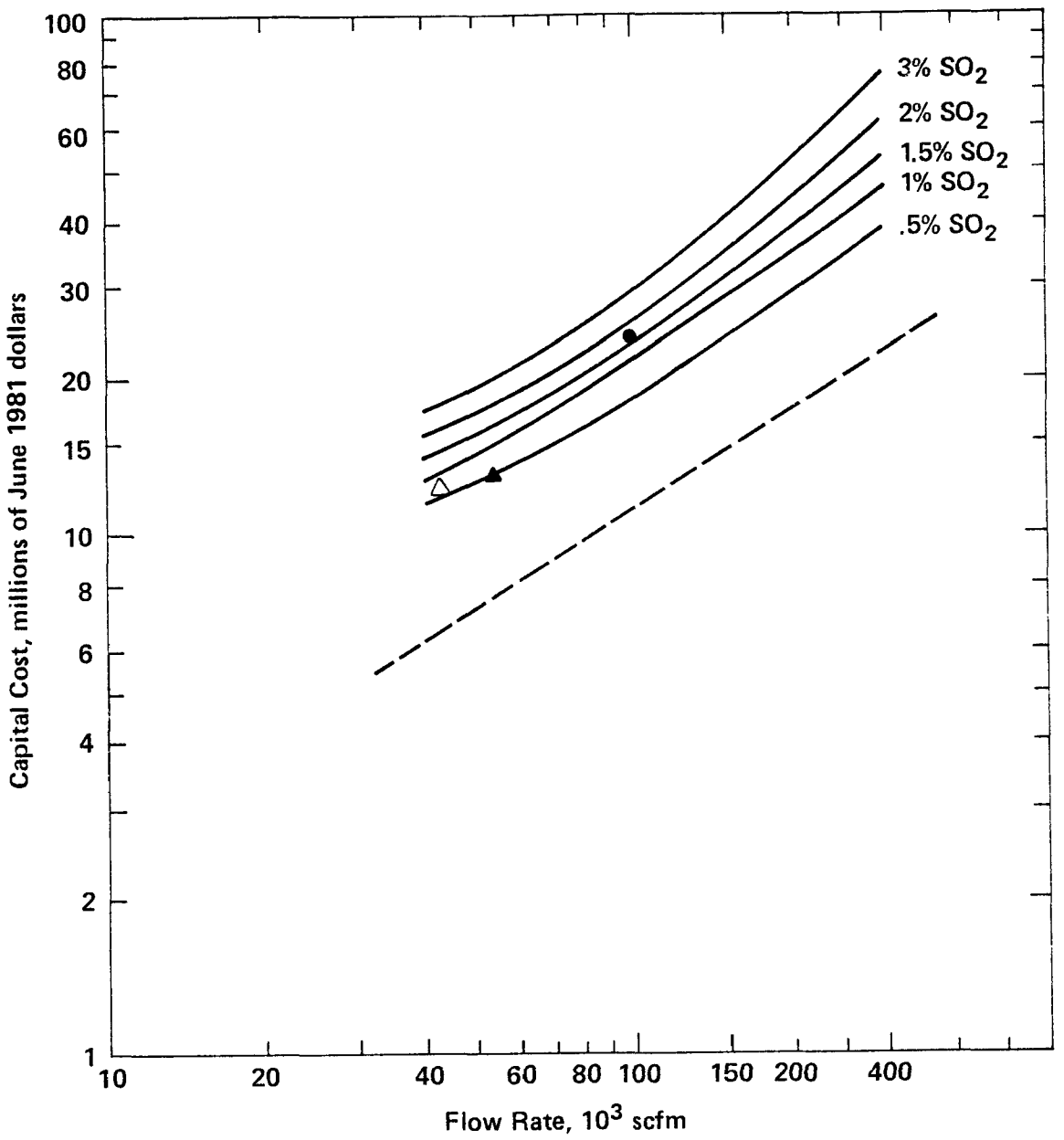

Notes: 1. Costs include materials handling and storage, gas cleaning and conditioning, SO_2 absorption, regeneration of scrubbing liquor, new stack, and stack gas reheating. Acid plant cost not included.

2. Solid lines represent costs calculated using a computer program documented in Reference 4.

Legend

▲ Costs are updated from Reference 1 for 1 percent SO_2.

— — Costs are updated from Reference 6 for 1 percent SO_2.

● Costs from Reference 5 for 1 percent SO_2 include a wastewater treatment plant, reclaimed storage, and retrofit costs.

△ Cost is updated from Reference 1 for 1.4 percent SO_2.

Figure 8-2. Capital cost of an MgO FGD system.

Using the equation developed in Section 8.2.1.1 and the acid plant inlet conditions given in Table 8-2, 3,890 Nm^3/min (137,300 scfm) and 4.5 percent SO_2 for the combined MgO outlet, roaster, and converter streams, yields a DC/DA acid plant cost of $48.0 million. Thus, the total capital cost for Alternative I-B is $74.0 million.

8.2.1.4 Capital Cost of Alternative I-C. Alternative I-C consists of treating 100 percent of the reverberatory offgases in an NH_3 regenerative FGD system. The strong SO_2 stream from the NH_3 FGD then goes to a DC/DA acid plant after being blended with the roaster and converter streams.

Costs for the Cominco NH_3 system, discussed in Section 4.3.3, are not available in the published literature. A search of the literature and discussions with Cominco indicate that only two such systems exist: the original facility built in 1936 at Trail, British Columbia, and a plant built in 1952 under license from Cominco in Pasadena, Texas, for Olin-Mathieson. The Olin-Mathieson plant was sold to Mobil Oil in 1980. No information is as yet available on the costs for an NH_3 scrubbing system.

A closely related system for which costs are available is the ammonia bisulfate (ABS) acidulation process (discussed in Section 4.3.3). A comparison of Figures 4-5 (Cominco system) and Figure 4-6 (ABS system) shows that the two processes are essentially the same, except for the acidulation step (the Cominco process uses H_2SO_4, and the ABS process uses ammonia bisulfate, NH_4HSO_4) and the final step (the Cominco process uses the $(NH_4)_2SO_4$ as fertilizer, and the ABS process reacts the $(NH_4)_2SO_4$ in a furnace to generate NH_3 and NH_4HSO_4). In the Cominco process, NH_3 is not recirculated as it is in the ABS process. Because NH_3 is expensive, the Cominco system will generally be economically feasible only when the ammonium sulfate, $(NH_4)_2SO_4$, is sold as fertilizer. Whether this can be done at a given smelter is a highly site-specific question involving the local fertilizer market, transportation costs to other markets, and the necessary product quality. For the Cominco process, the ammonium sulfate that leaves the SO_2 stripper (see Figure 4-5) must be dried, washed to remove

discoloration, granulated, and packaged. This involves additional capital cost beyond that for the equipment shown in Figure 4-5. As an approximation, it is assumed herein that the capital cost of this additional equipment is roughly equal to the capital cost of the additional furnace required for the ABS process. Thus, the capital cost of the ABS process is assumed to be comparable to that for the Cominco process.

In the same manner as for the MgO FGD systems, Figure 8-3 shows reported capital costs for ABS and other NH_3 scrubbing processes. In addition, Figure 8-3 also shows a cost reported by the Tennessee Valley Authority[7] for a process very similar to the Cominco process. The cost for this system, which is used for scrubbing coal-fired power plant stack gases, has been escalated (for inflation) and adjusted (for capacity differences) using the "0.6 rule" to determine the cost for an NH_3 scrubbing system processing 3,050 Nm^3/min (108,000 scfm) at 0.358 percent SO_2. Moreover, Figure 8-3 also shows the cost of a second NH_3 FGD system,[8] which includes H_2SO_4 acidulation of the scrubber effluent and fertilizer production. The cost of this system was estimated with the same escalation and adjustment procedure to determine the costs for a 3,050-Nm^3/min (108,000-scfm) system at 0.27 percent SO_2. Because these costs are consistent with those of Mathews[6] for the ABS process (note that they are somewhat lower due to the lower SO_2 concentration, as expected), the costs developed by Mathews (shown as solid lines) are used to determine the NH_3 scrubbing costs for this report.

The equation for the solid lines in Figure 8-3 is:

$$\ln \text{Cost} = -1.949 + 0.346 \ln (\% \, SO_2) + 0.57 \ln Q \ ,$$

where

Cost is in millions of June 1981 dollars

$\%SO_2$ is an absolute value, not expressed as a decimal (i.e., 4% SO_2 would be input as 4.0)

Q is in Nm^3/min.

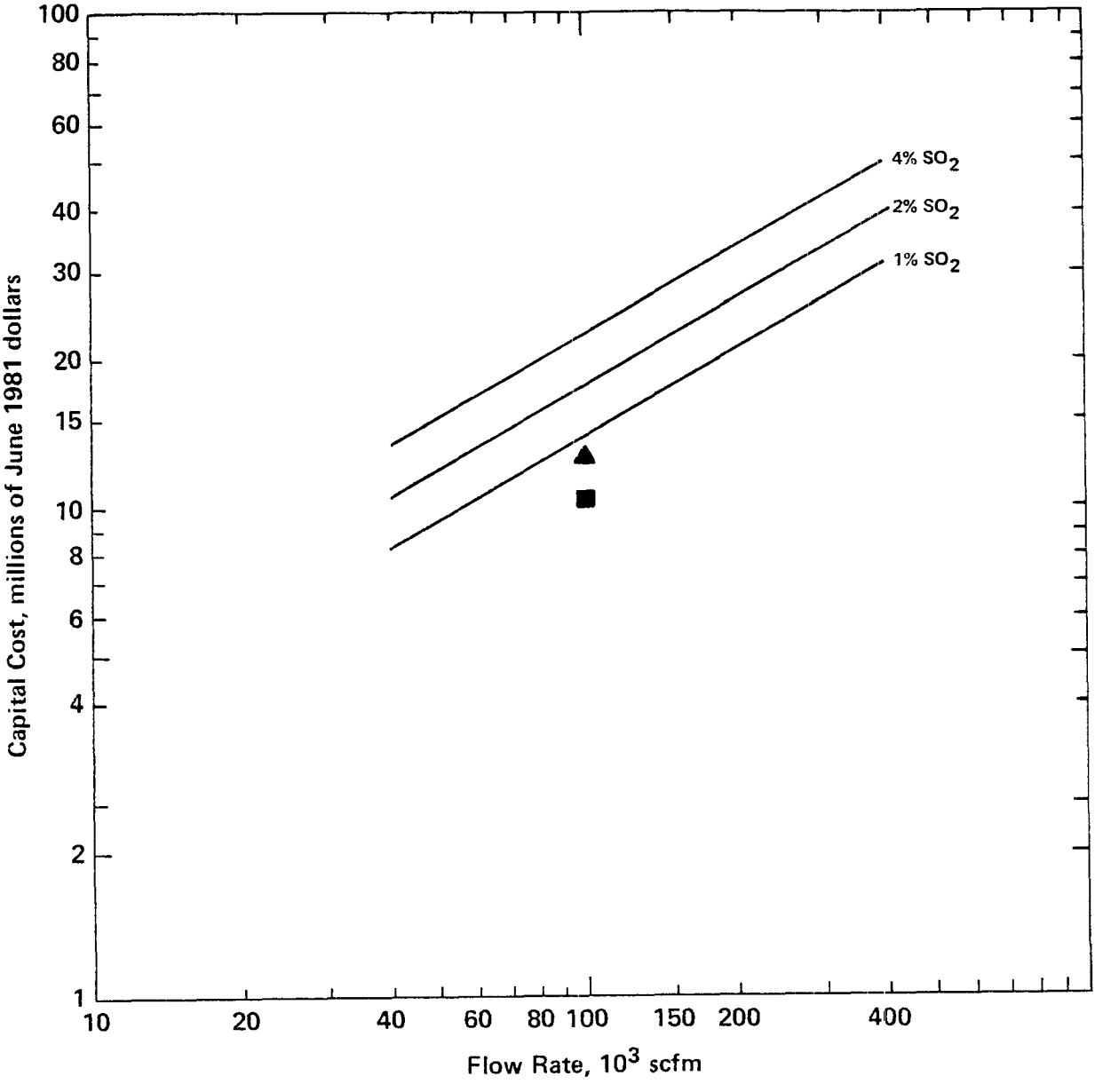

Notes: 1. Solid lines represent costs, including materials handling and storage, gas cleaning and conditioning, SO_2 absorption, and acidulation. An acid plant is not included.
2. Costs are for ammonium bisulfate acidulation of the scrubbing liquor from Reference 6.

Legend
▲ Costs have been scaled for a process similar to Cominco [$(NH_4)_2SO_4$ fertilizer production, H_2SO_4 acidulation] for 0.27 percent SO_2 from Reference 8.
■ Costs have been scaled for a process similar to Cominco [$(NH_4)_2SO_4$ fertilizer production, H_2SO_4 acidulation] for 0.36 percent SO_2 from Reference 7.

Figure 8-3. Capital cost of an ammonia FGD system.

Based on this equation, the cost in Alternative I-C of the NH_3 scrubbing system to process 3,315 Nm^3/min (117,000 scfm) of reverberatory furnace gas at 1.7 percent SO_2 (see Table 8-2) is $17.4 million. Based on the equation developed in Section 8.2.1.1, the cost of the DC/DA acid plant to handle the combined gases from the NH_3 scrubber outlet, roasters, and converters at a flow rate of 3,580 Nm^3/min (126,500 scfm) at a design SO_2 concentration of 4.5 percent is $45.4 million. Thus, the total capital cost for Alternative I-C is $62.8 million.

8.2.1.5 Capital Cost of Alternative I-D. Alternative I-D consists of controlling the reverberatory offgases with a limestone FGD system. The roaster and converter offgases are processed in a DC/DA acid plant.

Figure 8-4 shows the capital costs of a limestone FGD system from various published sources. These cost vary primarily due to the difference in scope among the reported values. The reference costs, shown as solid lines in Figure 8-4, are used in this report and represent costs developed for EPA with a computer program based on post-1978 original detailed cost estimates.[4] These costs, which have been judged to be more comprehensive than other reported costs, include material handling and storage, gas cleaning and conditioning using a venturi scrubber, a lined cooling pond, disposal pond, a new stack, and a stack gas reheater. Figure 8-4 shows an additional cost curve with a more limited scope, although costs are reported over a wide variety of conditions.[6] For example, cooling and disposal ponds and a stack are not included. Additional results of a later, though less detailed, study are also shown.[2] Costs for 1 and 1.4 percent SO_2--which lie fairly close to the reference costs (shown as solid lines in Figure 8-4)--are given in Reference 1.

The solid lines shown in Figure 8-4 were developed based on the following expression, which was derived for the relationship between costs and both SO_2 concentration and gas flow rate:

$$\ln \text{Cost} = \ln [1.191 - 0.104 \ln(\% SO_2)] + 0.628(\% SO_2)^{0.117} [\ln Q - 3.418]$$

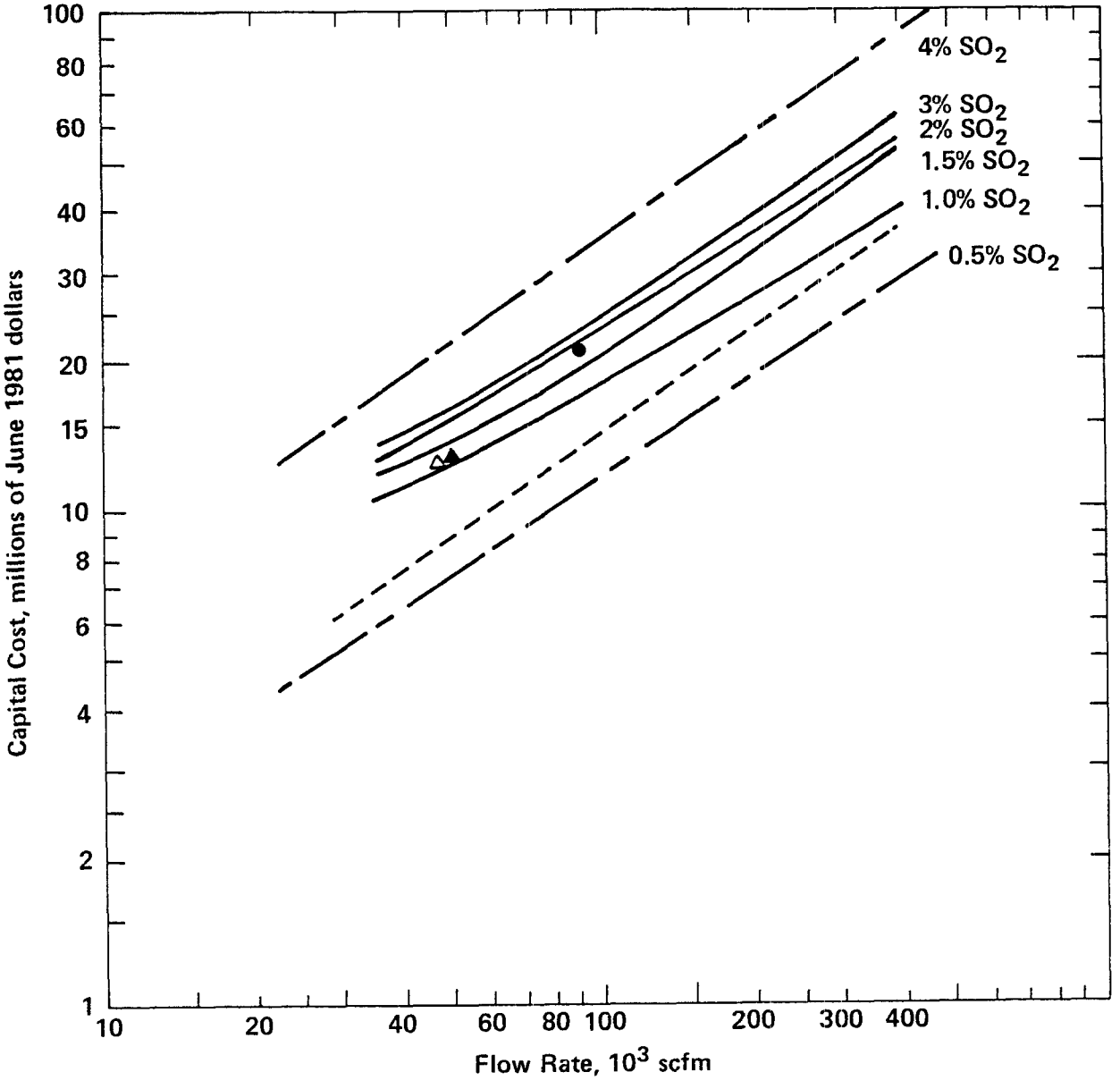

Notes: 1. Costs include materials handling and storage, feed preparation, gas cleaning and conditioning, scrubbing, lined cooling pond, disposal pond, new stack, and reheating of stack gases.

2. Solid lines represent costs calculated using a computer program documented in Reference 4.

Legend

— — Costs are updated from Reference 6 for 1 percent SO_2.

▲ Cost is updated from Reference 1 for 1 percent SO_2.

△ Cost is updated from Reference 1 for 1.4 percent SO_2.

● Costs from Reference 5 for 0.6 percent SO_2 include, in addition to Note 1, a dedicated wastewater treatment plant and special retrofit items.

—— - Costs are updated from Reference 2.

Figure 8-4. Capital cost of a limestone FGD system.

where

Cost is in millions of June 1981 dollars

Q is Nm^3/min

% SO_2 is expressed as a percent, not a decimal (i.e., 4% SO_2 would be input as 4.0).

Using this expression with the values shown in Table 8-2, 3,315 Nm^3/min (117,000 scfm) and 1.7 percent SO_2 yields a capital cost of $26.1 million for controlling the reverberatory furnace gases with a limestone FGD.

The capital cost for control of the roaster and converter streams is the same as that for the Baseline Case since, for both alternatives, only the roaster and converter streams are treated in the DC/DA acid plant (see Table 8-2). From Section 8.2.1.1, the cost of the acid plant is $43.6 million. Thus, the total capital cost for control under Alternative I-D is $69.7 million.

8.2.1.6 Capital Costs of Alternative I-E. Alternative I-E calls for blending 100 percent of the reverberatory gas stream with the multihearth roaster and converter streams and processing the combined stream in a DC/DA sulfuric acid plant. From Table 8-2, the maximum flow rate is 6,690 Nm^3/min (236,300 scfm), and the design SO_2 concentration is 3.5 percent, which is the lower autothermal operating limit for new DC/DA sulfuric acid plants. Table 6-3 shows that for 13.2 hours of the day, the SO_2 concentration of the combined stream is less than 3.5 percent. Supplementary heat is required. The capital cost of the equipment necessary for preheating the inlet gases is included in the scope of the capital costs given by the mathematical expression developed in Section 8.2.1.1. Thus, no additional capital expense is incurred due to the low SO_2 concentration. Using the expression developed above, the capital cost of the DC/DA plant to handle 6,690 Nm^3/min (236,300 scfm) at 3.5 percent SO_2 is $74.4 million.

8.2.1.7 Capital Cost of Alternative I-F. Alternative I-F consists of oxygen enrichment of the reverberatory furnace combustion air with 100 percent of the resulting reverberatory gas stream going to a DC/DA acid plant.

The use of oxygen enrichment is outlined in Sections 3.4.3.4 and 4.4.6. A central question is whether the smelter should have oxygen shipped in from offsite, provide it onsite from facilities owned by a company specializing in the field, or provide it by the owner's facilities onsite. The first option might be chosen by a smelter in a metropolitan area. However, the demands of a large smelter would probably swamp any supply of oxygen distilled in the vicinity of the smelter. The second and third choices are thus more likely, and the realities of the marketplace are such that the two are comparable on purely economic grounds; i.e., the annualized costs of oxygen in either case are roughly the same. Because air separation plants require an expertise and a replacement-parts inventory unlike those of the smelter, smelter owners would probably be inclined to contract for onsite oxygen. As an example, the Utah Copper Division of Kennecott has a contracted supply of oxygen.[9] A contract supply of oxygen is assumed herein, and there is thus no additional capital cost for an oxygen plant.

The total installed capital cost of oxygen enrichment hardware to fit a reverberatory furnace using oxygen "undershooting" (see Sections 3.4.3.4 and 4.4.6) is estimated at $510,000. This figure is based on a total equipment cost of $27,300, which includes four water-cooled oxygen lances, a control panel, oxygen analyzer, regulator, and a control valve. The cost of a single oxygen lance is assumed to be roughly equal to the cost of an oxyfuel burner, $1,800.[9] The costs of the control panel, oxygen analyzer, regulator, and control valve are approximately $12,000, $4,500, $2,400, and $1,200, respectively.[10] The total installed cost was derived by multiplying the total equipment cost of $27,300 by a factor of 3.0, which accounts for installation labor, site preparation, and all indirect costs.[11] These costs were then added to the purchased equipment cost to obtain the total installed capital cost of $110,000. The cost of piping and oxygen instrumentation, valving, and control equipment from the oxygen source to the furnace is estimated at $400,000.

The capital cost of the DC/DA acid plant is based on a flow rate of 5,710 Nm^3/min (201,500 scfm) and a design SO_2 concentration of

3.5 percent. Based on the expression developed in Section 8.2.1.1, the acid plant cost is $66.7 million. Thus, the total capital cost for control equipment is $67.2 million.

8.2.1.8 Capital Cost of Alternative I-G. Alternative I-G consists of adding oxyfuel burners to the reverberatory furnace and blending 100 percent of the resulting offgas stream with the roaster and converter streams. This blended stream is then processed in a DC/DA acid plant. The capital costs for this option include the cost of the oxyfuel burners and the acid plant. The total installed capital cost of the oxyfuel burners and associated equipment (piping, controls, instrumentation, etc.) is approximately $1 million, based on actual costs reported by Inco for an oxyfuel installation at its Copper Cliff smelter.[12] In addition to the cost of the burners and their installation, there are significant costs associated with sealing the burner end of the furnace, installing thermocouples in the sidewalls, and installing piping from the oxygen source to the furnace. The cost of the DC/DA acid plant, based on a flow rate of 4,660 Nm^3/min (164,600 scfm) and a design SO_2 concentration of 4.5 percent (from Table 8-3) is $54.2 million. Thus, the total capital cost for Alternative I-G is $55.2 million.

8.2.2 Annualized Costs

Annualized costs are the sum of total operating and capital recovery costs. Annualized costs for the control systems discussed in Section 8.2.1 were developed using the methodology shown below. The usage rate of raw materials, utilities, and direct operation labor hours (person-hours per year) have been developed for various process and control equipment. The annualized costs were then calculated as follows:

- Raw materials and utility costs were calculated by multiplying the usage rate (lb/yr or kWh/yr, e.g.) by the unit cost ($/lb or $/kWh, e.g.).

- Direct operating labor costs were calculated by multiplying the labor requirement (person-hours/yr) by the labor rate ($/person-hour).

TABLE 8-3. LABOR AND UTILITY UNIT COSTS

Item	Unit cost	Reference
Operating labor	$10.61/person-hour	5
Electricity	$0.042/kWh	5
Process water	$0.465/1,000 gal	5
Natural gas	$2.77/1,000 ft^3	5
Cooling water	$0.23/1,000 gal	5
Limestone	$7.75/ton	5
MgO	$200/ton	5
NH_3	$175/ton	5
Solids disposal (trucking)	$2.60/$yd^3$	5
Bunker C fuel oil	$.63/gal	13
Silica flux	$4.00/ton	1
Refractories (for greenfield, MHR-RV-CV)[a]	$0.30/lb	1
Additional operating supplies	$0.45/ton concentrate	1

[a] CV = Converter.
MHR = Multihearth roaster.
RV = Reverberatory furnace.

- Supervision costs were calculated as 20 percent of direct labor costs.

- Maintenance costs (labor and materials combined) were calculated as 4 percent of total capital cost.

- Maintenance supervision costs were calculated as 15 percent of maintenance costs (i.e., 0.6 percent of total capital cost).

- Overhead costs were calculated as 50 percent of the sum of operation labor cost (direct operating labor plus supervision) and maintenance cost (labor, materials, and supervision).

- Taxes, insurance, and administration costs were calculated as 4.0 percent of total capital cost.

- Capital recovery costs were calculated as 16.275 percent of the total capital costs (corresponding to a capital recovery rate of 10 percent for 10 years).[11]

Raw material, labor, and utility unit costs used in this study are shown in Table 8-3. All labor costs are based on 8,760 hr/yr (365 days); raw material and utility costs are based on 8,400 hr/yr (350 days). Appendix M contains a detailed listing of the capital, total operating, and annualized costs of SO_2 control for the Baseline Case and each control alternative of Table 8-1.

8.2.2.1 Annualized Costs for the Baseline Case. Annualized control costs for the Baseline Case consist of the costs associated with the DC/DA sulfuric acid plant controlling the roaster and converter streams and with the hot ESP. The DC/DA acid plant and the hot ESP are designed to handle 3,380 Nm^3/min (119,400 scfm) at 4.5 percent SO_2. Direct operating labor for a DC/DA acid plant within the range of sizes shown in Table 8-2 is 3 persons per shift.[1] Utility and raw material requirements depend on the plant size, however. These requirements consist of cooling and process water, electricity, and limestone (for fixation of gas cleaning water). Based on data provided in Reference 1, mathematical relationships were developed for computing the water and electricity usage rates. Similarly, a mathematical relationship was developed from information given in Reference 6

for computing the limestone usage rate. The relationships developed are as follows:

$$\text{Cooling water usage} = (0.120 \times 10^3)(Q)\ \frac{\text{thousands of gallons}}{\text{year}}$$

$$\text{Process water usage} = (\%\ SO_2)(Q)[27.1 - 1.78\ (\%\ SO_2)]\ \frac{\text{thousands of gallons}}{\text{year}}$$

$$\text{Electrical usage} = (4.11 \times 10^4)(Q)\ \frac{\text{kilowatt-hours}}{\text{year}}$$

$$\text{Limestone usage} = 0.761\ (Q)\ \frac{\text{tons}}{\text{year}},$$

where

Q is in Nm^3/min

% SO_2 is expressed as an absolute number, not a decimal (i.e., 4% SO_2 would be input as 4.0).

Development of annualized control costs for the baseline case is shown below:

	$\$10^6$
Capital costs	46.3
Operating costs	
Raw materials $3{,}385 \times 0.761 \times \frac{7.75}{10^6} =$	0.019
Cooling water: $(3{,}385)\ (0.12 \times 10^3)\ \frac{(0.23)}{10^6} =$	0.093
Process water: $(3{,}385)(4.5)[27.1-1.78(4.5)]\ \frac{(0.465)}{10^6} =$	0.135
Electricity:	6.477
Acid plant: $(3{,}385)(4.11 \times 10^4)\ \frac{(0.042)}{10^6} =$	(5.843)
ESP:	(0.634)
Labor, direct operating:	0.310
Acid plant: $3 \times 3 \times 365 \times 8 \times \frac{\$10.61}{10^6} =$	(0.279)
ESP: $1/3 \times 3 \times 365 \times 8 \times \frac{\$10.61}{10^6} =$	(0.031)
Labor, supervision: $0.310 \times 0.2 =$	0.062
Maintenance, labor, and material: $0.04 \times \$46.3 =$	1.852
Maintenance: supervision: $0.006 \times \$46.3 =$	0.278
Overhead: $0.50\ (0.310 + 0.062 + 1.852 + 0.278) =$	1.251
Taxes, insurance, administration: $0.04 \times \$46.3 =$	1.852
Total operating costs	12.323
Capital recovery cost: $(0.16275)\ (46.3) =$	7.535
Annualized cost: $12.310 + 7.535 =$	19.858

Note: Differences between these figures and those in Appendix M are due to rounding.

After the labor, raw material, and utility usage rates were determined, the annualized costs were calculated with the factored estimate method discussed in Section 8.2.2. No credit was taken for the sulfuric acid produced. The results are a total operating cost of $12.3 million per year and a total annualized cost of $19.9 million per year:

Baseline Case

Capital recovery costs	Total operating costs	Total annualized costs
7.5 (0.16275 × 46.3)	$12.3 million	$19.9 million

8.2.2.2 Annualized Cost of Alternative I-A. Annualized costs for Alternative I-A were calculated with the methodology discussed in Section 8.2.2.1. The DC/DA acid plant for this alternative must handle 4,870 Nm^3/min (172,000 scfm) at a design SO_2 concentration of 3.5 percent. Supplemental heat is required (see Tables 6-3 and 8-2). The resulting additional cost, assuming that the heat of combustion for natural gas is 10^6 Btu/10^3 ft^3 and that the cost of natural gas is $2.77/$10^3$ ft^3, is $21,300. The total operating cost for Alternative I-A is estimated at $16.8 million per year, and the annualized cost is estimated at $26.8 million per year:

Alternative I-A

Capital recovery costs	Total operating costs	Total annualized costs
10.0 (0.16275 × 61.3)	$16.8 million	$26.8 million

8.2.2.3 Annualized Cost of Alternative I-B. Annualized costs for the MgO regenerative FGD and its associated acid plant consist of labor, utilities, and raw materials. For the MgO FGD, usage rates were derived from published data by multiplying the values given in Table 8-4 by the appropriate quantities. Efficiencies for various FGD systems, including the MgO, are given in Table 4-8. For example, to calculate the annual usage rate of the MgO, the value (given in Table 8-4) of 0.0322 lb MgO/lb SO_2 absorbed was multiplied by the pounds of SO_2 absorbed per year. The result is as follows:

TABLE 8-4. FGD RAW MATERIAL AND UTILITY USAGE RATE

Process	Usage Rate	Reference
Limestone		
Limestone	1.9 lb/lb SO_2 removed	6
Process water	8.90 lb/lb SO_2 removed	1
Electricity	201 kWh/yr-scfm	1
Solid generation (for disposal)	0.0019 yd^3/lb SO_2 removed	1
MgO		
MgO	0.0322 lb/lb SO_2 removed	6
Coke	0.0105 lb/lb SO_2 removed	6
Process water	7.12 lb/lb SO_2 removed	1
Electricity	107 kWh/yr-scfm	1
Fuel oil	0.0397 gal/lb SO_2 removed	13
NH_3		
NH_3	1 mol NH_3/mol SO_2 removed	6, 7
H_2SO_4	½ mol H_2SO_4/mol SO_2 removed	6, 7
Process water	0.06 gal/lb SO_2 absorbed	6
Electricity	4 kW/1,000 scfm, plus 0.39 kWh/lb SO_2 absorbed	6

$$\text{lb } SO_2 \text{ absorbed/yr} = 0.0322 \text{ lb } \frac{MgO}{\text{lb } SO_2 \text{ absorbed}} [(Q)(1{,}000) \text{ ft}^3\text{@STP}]$$

$$\left(\frac{\%\ SO_2}{100} \right) \left(0.178 \frac{\text{lb } SO_2}{\text{ft}^3} \text{@STP} \right) \left(60 \frac{\text{min}}{\text{hr}} \right) \left(8{,}400 \frac{\text{hr}}{\text{yr}} \right)$$

$$\left(0.99 \frac{\text{lb } SO_2 \text{ absorbed}}{\text{lb } SO_2 \text{ fed}} \right) = (2.86 \times 10^4)\ (Q)\ (\%\ SO_2)\ .$$

The following are the usage rates derived:

Labor:	3 persons/shift
MgO:	$(9.47 \times 10^2)(Q)(\%\ SO_2)$ lb/yr
Process water:	$(25.1)(Q)(\%\ SO_2)$ thousands of gal/yr
Electricity:	$(3.63 \times 10^3)(Q)$ kWh/yr
Coke:	$(3.09 \times 10^2)(Q)(\%\ SO_2)$ lb/yr
Fuel oil:	$(1.65 \times 10^3)(Q)(\%\ SO_2)$ gal/yr,

where

Q is in Nm^3/min

% SO_2 is expressed as a percent (i.e., 4% SO_2 would be input as 4.0).

For this alternative, the MgO FGD must handle 3,315 Nm^3/min (117,000 scfm) at 1.7 percent SO_2. The total operating and annualized costs were calculated with these values and the methodology discussed in Section 8.2.2. The total operating costs are $8.22 million, and the total annualized costs are $12.5 million.

The DC/DA acid plant handles the combined MgO, roaster, and converter streams, a total flow rate of 3,890 Nm^3/min (137,300 scfm) at a design SO_2 concentration of 4.5 percent; operating and annualized costs were calculated with the methodology of Section 8.2.2.1. The total operating and annualized costs computed for this alternative are $21.0 million per year and $33.0 million per year, respectively:

Alternative I-B

Control	Total operating costs	Total annualized costs
MgO	$ 8.2 million	$12.5 million
DC/DA	$12.7 million	$20.1 million
Total	$21.0 million	$33.0 million*

*Includes a capital recovery cost of $12.0 million.

8.2.2.4 Annualized Cost of Alternative I-C. For the NH_3 FGD, the labor and utility rates were calculated with published references.[6 7] The following were calculated as shown in Section 8.2.2.3 (see also Table 8-4):

Labor:	3 persons/shift
NH_3:	$(3.51)(Q)(\% SO_2)$ tons/yr
Electricity:	$Q[1.10 \times 10^3 + 1.04 \times 10^4 (\% SO_2)]$ kWh/yr
H_2SO_4:	$(5.57)(Q)(\% SO_4)$ tons/yr
Process water:	$(1.60)(Q)(\% SO_4)$ thousands of gal/yr
Cooling water:	$(3.4 \times 10^2)(Q)(\% SO_2)$ thousands of gal/yr ,

where

Q is in Nm^3/min

% SO_2 is expressed as a percent, not a decimal (i.e., 4% SO_2 would be input as 4.0).

The total operating and annualized costs were calculated with these expressions and the flow rate of 3,890 Nm^3/min (117,000 scfm) and a SO_2 concentration of 1.7 percent. The results are total operating costs of $10.4 million and total annualized costs of $13.3 million. The DC/DA acid plant operating and annualized costs were calculated with the methodology of Section 8.2.2.1. Thus, the total operating and annualized costs for this alternative are $22.3 million per year and $32.6 million per year, respectively:

Alternative I-C

Control	Total operating costs	Total annualized costs
NH_3	\$10.4 million	\$13.3 million
DC/DA	\$11.9 million	\$19.3 million
Total	\$22.3 million	\$32.6 million*

*Includes capital recovery cost of \$10.3 million.

8.2.2.5 Annualized Cost of Alternative I-D. Alternative I-D consists of limestone scrubbing of the reverberatory furnace stream with the roaster and converter streams going to a DC/DA acid plant. The reverberatory furnace stream is 3,315 Nm^3/min (117,000 scfm) at 1.7 percent SO_2.

The labor, raw material, and utility usage rates for the limestone FGD are taken from Reference 4. The labor requirement is five persons per shift. Raw material, utility, and solid waste disposal rates are presented in Table 8-4. Based on these rates, the following mathematical relationships were developed:

Limestone: $(28.0)(Q)(\%\ SO_2)$ tons/year

Process water: $(31.5)(Q)(\%\ SO_2)\ \frac{\text{thousands of gallons}}{\text{year}}$

Electricity: $(6.6 \times 10^3)(Q)$ kilowatt-hours/year

Solids (to be disposed): $(56)(Q)(\%\ SO_2)\ yd^3/yr$,

where

Q is Nm^3/min

% SO_2 is an absolute number, not a decimal (i.e., 4% SO_2 would be input as 4.0).

Based on these expressions, the raw material and utility requirements are 1.57×10^5 tons/yr limestone, 1.76×10^8 gal/yr process water, and 2.17×10^7 kWh/yr electricity. Additionally, 1.84×10^5 yd^3/yr of solids must be disposed. Based on the methodology of Section 8.2.2, the total operating costs are \$6.30 million, and the total annualized costs are \$10.6 million.

The DC/DA acid plant operating and annualized costs were calculated with the methodology outlined in Section 8.2.2.1. Total operating costs for this alternative are $17.7 million per year, and total annualized costs are $29.1 million per year:

Alternative I-D

Control	Total operating costs	Total annualized costs
Limestone	$ 6.38 million	$10.6 million
DC/DA	$11.4 million	$18.5 million
Total	$17.7 million	$29.1 million*

*Includes capital recovery costs of $11.4 million.

8.2.2.6 Annualized Cost of Alternative I-E. Annualized costs for Alternative I-E, which involves blending of 100 percent of the reverberatory furnace stream with the roaster and converter streams, were calculated in the same manner as those for the Baseline Case described above. From Table 8-2, the DC/DA acid plant size is 6,690 Nm^3/min (236,300 scfm), with a design SO_2 concentration of 3.5 percent. As noted in Section 8.2.1.2 and shown in Table 6-3, there is a period of 1.3 hours during which the SO_2 concentration falls below the autothermal operating limit of 3.5 percent. This requires supplementary heat of 4.7×10^7 Btu/24 hours (see Tables 6-3 and 8-2), which is supplied by natural gas burners and heat exchangers and represents an additional operating cost. This additional operating cost, assuming that the heat of combustion of natural gas is 10^6 Btu/10^3 ft^3 and that the cost of natural gas is $2.77/$10^3$ ft^3, is $330,600.

Based on the expressions developed in Section 8.2.2.1, the cooling water, process water, electricity, and limestone usage rates for the DC/DA acid plant were calculated to be 8.01×10^8 gal/yr, 4.88×10^8 gal/yr, 2.74×10^8 kWh/yr, and 3.22×10^4 tons/yr, respectively. Based on these values, the total operating costs for the acid plant are $21.0 million per year, and the corresponding annualized costs are $33.1 million per year:

Alternative I-E

Capital recovery costs	Total operating costs	Total annualized costs
$12.1 million (0.46275 × 74.4)	$21.0 million	$33.1 million

8.2.2.7 Annualized Cost of Alternative I-F. Alternative I-F consists of oxygen enrichment of the reverberatory furnace with the resulting gas stream being treated in a DC/DA acid plant after blending with the roaster and converter streams. Annualized costs for Alternative I-F include the costs associated with both the oxygen enrichment and the DC/DA acid plant. It is assumed herein that no additional labor or utility usage is required by the oxygen enrichment equipment. The only costs attributable to this equipment are thus maintenance and capital-related costs. Supplementary heat is required (see Tables 6-3 and 8-2) and, based on methodology discussed in Sections 8.2.2.2 and 8.2.2.6, the resulting annual cost is $45,600. These costs were calculated with the methodology of Section 8.2.2.1, with the labor and utility usage rates equal to zero.

The oxygen usage rate is 116 tons/day (see Table 8-2). The unit cost of oxygen under contract was said to be $36/ton in 1979.[14] This cost must be escalated to June 1981 dollars. Equipment and plant cost indexes are somewhat inaccurate when applied to oxygen, an energy-intensive product.[15] For example, although the Chemical Engineering Plant Cost Index has increased 25 percent from 1979 to June 1981, the increase in contract oxygen cost is probably closer to 30 percent, to about $47/ton. Based on this value, the cost of oxygen is $1.91 million per year.

The use of oxygen enrichment results in an 18-percent fuel oil savings in the reverberatory furnace relative to the Baseline Case. Thus, process costs for this alternative are less than the Baseline Case due to the fuel savings associated with the use of oxygen. This is reflected in the annualized fuel oil costs shown in Appendix M.

The DC/DA acid plant for this option must handle 5,710 Nm^3/min (201,500 scfm) at a design SO_2 concentration of 3.5 percent. The

total operating and annualized costs for the acid plant were calculated with the methodology of Section 8.2.2.1. The total operating cost for this alternative is $20.0 million, and the total annualized cost is $30.9 million:

Alternative I-F

Control	Total operating costs	Total annualized costs
Oxygen enrichment	$ 2.0 million	$ 2.1 million
DC/DA	$18.0 million	$28.8 million
Total	$20.0 million	$30.95 million*

*Includes a capital recovery cost of $10.9 million.

8.2.2.8 Annualized Cost of Alternative I-G. Alternative I-G consists of adding oxyfuel burners to the reverberatory furnace and blending the resulting offgases with the multihearth roaster and converter streams and processing the blended stream in a DC/DA acid plant. Annualized costs for this alternative include those for both the oxyfuel system and the acid plant. This oxyfuel option results in a 40-percent fuel oil savings relative to the Baseline Case. This cost saving is reflected in the costs given in Appendix M and below.

The oxyfuel system is assumed to require no additional labor costs. Thus, as for the oxygen enrichment option above, its annual operating costs consist of maintenance and capital-related costs.

The oxygen usage rate for Alternative I-G is 219 tons/day (see Table 8-2). At $47/ton, the annual cost for oxygen is thus $3.61 million. The DC/DA acid plant for this option must handle 4,660 Nm^3/min (164,600 scfm) at a design SO_2 concentration of 4.5 percent.

The total operating costs for this alternative are $18.5 million per year, and the total annualized costs are $27.5 million per year (based on the methodology of Section 8.2.2.1):

Alternative I-G

Control	Total operating costs	Total annualized costs
Oxyfuel burners	$ 3.2 million	$ 3.9 million
DC/DA	$15.3 million	$23.6 million
Total	$18.5 million	$27.5 million*

*Includes capital recovery costs of $10.0 million.

8.3 COSTS FOR FUGITIVE EMISSION CONTROL

Fugitive control costs are developed herein for two 1,364-Mg/day (1,500-ton/day) model plants: one consisting of five multihearth roasters, one reverberatory furnace, and three converters and a second consisting of one flash furnace and three converters and an electric slag cleaning furnace. Alternatives evaluated for the control of fugitive particulate matter for a smelter processing high-impurity materials and the percent reduction in emissions from the Baseline Case are given in Table 8-5.

Costs for control of fugitive emission sources include the costs associated with the capture of fugitive SO_2 and particulate matter emissions, as well as the costs associated with the subsequent collection of the captured particulate matter. The cost of a new stack is not included because a stack of sufficient size to handle the fugitive emission controls is included in the Baseline Case. Capital and annualized costs were developed for the control of fugitive emissions from each of the sources selected in Section 6.4 for possible regulation. See Appendix N for a detailed listing of capital and operating costs for fugitive emission control.

The design ventilation rates for each type of fugitive control system are identified in Chapter 4 based on the most effective systems. Assumptions are made with regard to the number of operations (slag skimming, matte tapping, etc.) that would occur simultaneously, taking into account what may happen even under somewhat abnormal operation. Consequently, system design ventilation rates were determined for a "worst case" situation to ensure that adequate capacity would be available. Specific values used for each source of fugitive emissions are discussed below.

8.3.1 Capital Costs

8.3.1.1 Calcine Discharge. For the multihearth roaster, a larry car interlock system such as the one employed at ASARCO-Hayden has been judged to be effective in capturing emissions that occur during calcine discharge. As discussed in Section 4.7.4 and shown in Figure 4-24, this system employs three ports at the point where the calcine

TABLE 8-5. EVALUATED ALTERNATIVES FOR CONTROL OF FUGITIVE PARTICULATE EMISSIONS FROM A NEW COPPER SMELTER (MULTIHEARTH ROASTER, REVERBERATORY FURNACE, CONVERTER OR FLASH FURNACE-CONVERTER) PROCESSING HIGH-IMPURITY MATERIALS

	Emissions captured and collected, %		
	Baseline case	Alternative II-A	Alternative II-B
Roaster calcine discharge[a]	Capture only 0	Larry car interlock and ventilated enclosure to baghouse 89.1	Same as II-A 89.1
Smelting furnace matte tapping and slag skimming	Capture only 0	Tap port and skim bay hoods, ladle hoods, launder covers to baghouse 89.1	Same as II-A 89.1
Converter, blowing, charging, skimming, pouring	Capture only 0	Building evacuation to baghouse 94.1	Air curtain and fixed enclosure to baghouse 89.1

[a]Not applicable to flash furnace-converter configuration.

hopper-larry car connection is made. One of the ports is used to transfer the calcine from the hopper to the car; the other two ports are used to ventilate the fugitive emissions generated. The ventilation rate at each port is 140 Nm^3 (5,000 scfm), for a total of 280 Nm^3/min (10,000 scfm) per hopper.

The total gas evacuation flow rate from the possible simultaneous discharge of two hoppers is 565 Nm^3/min (20,000 scfm). The cost of a fabric filter to control these emissions can be calculated from the following equation, adapted from Reference 17, for an air/cloth ratio of 2.5 ft/min and a design pressure drop across the fabric filter system of 4 inches H_2O:

$$\ln \text{Cost} = -3.84 + 0.841 \ln [Q\ (T)] ,$$

where

Cost is in thousands of June 1981 dollars

Q is in Nm^3/min

T is the actual gas stream temperature, °K.

At a flow rate of 565 Nm^3 (20,000 scfm) and a temperature of 50° C (120° F) (based on information given in Reference 6), the baghouse cost is $571,000 based on the above equation. The larry car capture system equipment has a capital cost estimated at about $95,000. This is based on a cost of $19,000 per hood[5] for each of the five hoods required (one hood per roaster). The capital cost of a fan for the capture system that must handle 280 Nm^3/min (10,000 scfm) at 120° F at a pressure drop across the hoods, ducting, and stack of 4 inches H_2O was calculated from information given in Reference 17 to be $21,000. The total cost for the larry car system and the baghouse is thus $687,000.

8.3.1.2 Matte Tapping and Slag Skimming. For the reverberatory furnace, both matte tapping and slag skimming fugitives are to be controlled. Hooding systems such as the one used at ASARCO-Tacoma have been judged to be extremely effective in capturing these emissions (see Section 4.7.5.1 and Figure 4-26). This system uses local hooding over tapping ports and skim bays and ladle hoods for both matte ladles

and slag pots. A typical furnace configuration involving four matte tapping ports and two slag skimming bays was used as a basis for the cost estimates. The evacuation rate for the matte tapping hoods is 280 Nm^3/min (10,000 scfm) per hood (Section 4.7.5.1) and the temperature is about 80° C (175° F).[5] The matte ladle hood is evacuated at 850 Nm^3/min (30,000 scfm) (see Figure 4-25), and the temperature is about 40° C (100° F) (temperature based on slag ladle hood gas temperature given in Reference 6). For slag skimming, each of the two skim bay hoods is evacuated at 140 Nm^3/min (5,000 scfm) at a temperature of 40° C (100° F),[5] while each of the slag pot hoods is evacuated at 565 Nm^3/min (20,000 scfm) at a temperature of 40° C (100° F) (see Figure 4-27). In determining the total evacuation rate for the reverberatory furnace fugitive emission control system, it is assumed that one matte tap and one slag skim could occur simultaneously, although the frequency of such occurrences would not be great. Whenever a tap or skim occurs, both the local and ladle hoods for the port or bay involved must be evacuating. Other hoods are assumed to be closed. The total evacuation rate for one matte tap plus one slag skim is 1,840 Nm^3/min (65,000 scfm) per reverberatory furnace. A design based on this evacuation rate should ensure that there is adequate fan capacity to capture fugitive emissions during all possible reverberatory furnace operations.

Based on the baghouse cost equation above, a temperature of 50° C (120° F), and a flow rate of 1,840 Nm^3/min (65,000 scfm), the cost of the baghouse for the reverberatory furnace is $1.54 million. The capture system cost is estimated at $298,000, based on information given in References 5, 17, 18, and 19. The total cost of the system is thus $1.84 million.

8.3.1.3 Converters. Two technologies are currently being used for control of fugitive emissions generated by copper converters. These are the building evacuation system and the air curtain/fixed enclosure system (see Sections 4.7.6.1 and 4.7.6.3). For building evacuation, the primary element upon which the evacuation rate is based is the number of converters present within the structure. A design evacuation rate for a building evacuation system that handles

four converters is 25,500 Nm^3/min (900,000 acfm), as discussed in Section 6.3. Based on a temperature of 55° C (130° F) for the evacuated air,[18] this corresponds to 21,250 Nm^3/min (750,000 scfm). Since all of the base case smelters that represent greenfield smelters have four converters, 25,500 actual cubic feet per minute (Am^3/min) (900,000 acfm) has been used as the design evacuation rate for the purpose of estimating the cost of building evacuation fugitive emission control. For the air curtain/fixed enclosure system, 2,830 Nm^3/min (100,000 scfm) per converter is selected as the maximum design ventilation rate.[19] It was assumed that only two of the four converters are blowing at any one time, and thus a total evacuation rate of 5,665 Nm^3/min (200,000 acfm) at 65° C (150° F) was used to calculate the fugitive control costs for the air curtain/fixed enclosure.

The cost of the air curtain/secondary hood was taken from data provided by ASARCO.[19] For this case, the capital cost is $6.17 million for all four converters. The balance of the air capture system cost (primarily ducting) was estimated from Reference 19 to be $1.53 million. When an air curtain is used, the baghouse cost is $4.13 million, based on a flow rate of 5,665 Nm^3/min (200,000 scfm) at 65° C (150° F) and the cost equation given in Section 8.3.1.1. Thus, the total system cost for the air curtain is $11.83 million. For the capture system using building evacuation, the baghouse cost is $12.2 million, based on a flow rate of 21,250 Nm^3/min (750,000 scfm) at 55° C (130° F) and the cost equation given in Section 8.3.1.1. The cost of the ducting and hoods required for building evacuation was estimated from Reference 18 to be $4.6 million, to which a fan cost of $900,000 is added based on costs reported in Reference 17. Thus, the total system cost for building evacuation is $17.5 million.

8.3.2 Annualized Costs

Annualized costs were developed for fugitive control equipment based on the same methods described in Section 8.2.2. For the purposes of estimation, all labor and utility costs were assigned to the baghouse. That is, it was assumed that there are no operating costs for the air capture system.

Electrical usage was calculated assuming that the major electrical consumption is by the main fans. A value of 23 kWh/yr-acfm can be calculated assuming a 60-percent fan efficiency, a total pressure drop from source to stack of 14 inches H_2O, and 8,400 hr/yr operation. Additional electrical consumption by the screw conveyor, instrumentation, reverse air fans, and shakers was calculated as 10 percent of the fan consumption. Thus, the total electrical usage rate is 25 kWh/yr-acfm.

Based on these inputs, the total annualized costs were calculated as discussed in Section 8.1.1. Labor requirements were assumed to be zero for the capture system, 1/3 person per shift for the roaster and the converter-air curtain, and 1/4 person per shift for the reverberatory furnace and the converter-building evacuation. These labor rates correspond to those used in calculating the annualized costs for the ASARCO-Tacoma and Anaconda smelters in Reference 18. A value of 1/4 person per shift was used in Reference 18 for the matte and slag tapping fugitive emission control and for building evacuation. The annualized costs were calculated with the methodology of Section 8.2.2.1. The results are shown below:

	Capture system (hood, duct, fan)		Collection system (baghouse)	
Source[a]	Total capital cost[b]	Total annualized cost[b]	Total capital cost[b]	Total annualized cost[b]
Multihearth roaster	116	39	571	234
Reverberatory furnace	298	103	1,540	533
Converter--BE	5,300	1,710	12,200	4,185
--AC	6,170	2,240	4,130	1,400

BE = Building evacuation.

AC = Air curtain.

[a]The cost given is for the total model plant. Specifically, the multihearth roaster costs are for control of five roasters, the reverberatory furnace costs are for one furnace, and the converter costs are for four converters.

[b]In thousands of June 1981 dollars. Annualized costs include capital recovery costs, 16.275 percent of the total capital cost.

8.4 COST OF CONTROLLING PROCESS PARTICULATE EMISSIONS FROM REVERBERATORY FURNACES IF THE REVERBERATORY EXEMPTION IS RETAINED

8.4.1 Capital Costs

If the SO_2 emission exemption for reverberatory furnaces processing high-impurity material is retained, process particulate matter from the reverberatory furnace must still be controlled. The cost of controlling the emissions will be the cost of a direct contact spray chamber immediately downstream of the hot ESP and either a coldside ESP or a baghouse for the model plant shown in Figure 6-1. The design of the spray chamber is based on information given in Reference 6. Design parameters for the baghouse are discussed in Section 6.2. The flow rate from the reverberatory furnace was calculated at 3,315 Nm^3/min (117,000 scfm) at a temperature of 110° C (230° F) from the material balance for the model plant given in Figure 6-1. The installed capital cost of the spray chamber is estimated, from cost information given in reference 6 (p. 286) after adjusting to June 1981 dollars, to be $2.92 millon for this flow rate.

Based on published information on the sparkover voltage and average corona current for reverberatory gas streams,[20] the resistivity of the reverberatory dust is judged to be relatively low. Based on this judgment, a specific collection area (SCA) of 300 ft^2/thousand acfm is selected. The costs of hot and cold ESP designed for this SCA can be estimated with the following equations adapted from Viner and Ensor:[16]

$$\ln \text{Cost} = -7.559 + 0.627 \ln [Q\ (T)] \text{ (cold ESP)},$$

$$\ln \text{Cost} = -9.065 + 0.634 \ln [Q\ (T)] \text{ (hot ESP)},$$

where

Cost is in millions of June 1981 dollars

Q is the gas flow rate in Nm^3/min

T is the actual temperature of the gas in °K.

For a flow rate of 1,480 Nm^3/min (52,300 scfm) (45 percent blending alternative), the temperature is 120° C (250° F). The ESP cost is $2.1 million.

Based on the above cost equation for the coldside ESP and the cost equation developed in Section 8.3.1.1 for the baghouse, the capital costs of these control systems are \$3.4 million (coldside ESP) and \$2.7 million (baghouse)

8.4.2 Annualized Costs

The operating cost for the coldside ESP was calculated as indicated in Section 8.2.2.1 based on an annual electrical usage rate calculated from data given in Reference 17. The electrical usage rate derived from these data is 0.474 (QT) kWh/yr, where Q is the flow rate in Nm^3/min and T is the temperature of the gas stream in °K. For this case, Q is 1,480 Nm^3/min (52,300 scfm) and T is 110° C (230° F), as discussed in Section 8.2.1.2. Thus, the electrical usage rate of the ESP is 2.76×10^5 kWh/yr.

The annualized costs for the coldside ESP, baghouse, and spray chamber were calculated with the methodology described in Section 8.2.2. No labor was assigned to the spray chamber. The labor rate associated with both control systems is 1/3 person per shift based on information in Reference 21 (see Sections 8.2.2.2 and 8.3.2). Cooling water, limestone (for neutralization), and electricity are required for the spray chamber. The only utility required for the ESP and baghouse is electricity.

The limestone usage rate may be calculated from an assumed SO_3 content of the inlet gas of 0.3 percent,[6] the stoichiometry of the limestone neutralization reaction (1 mole $Ca(O_3)$ per mole SO_3), and a 20-percent excess to be $(0.83)(Q)\frac{\text{tons}}{\text{year}}$. For a flow rate of 3,315 Nm^3/min (117,000 scfm), the limestone usage rate is thus 2.75×10^3 tons/year.

The cooling water used in the spray chamber may be calculated assuming adiabatic humidification of an inlet gas stream at 315° C (600° F)[6] to saturation at 110° C (230° F). The cooling water required for this operation can be calculated by standard engineering procedures to be 1.0 gallon cooling water per standard cubic foot of gas. Assuming a 10-percent loss in the cooling tower and other miscellaneous losses, the total cooling water requirement can be expressed as $(1.82 \times 10^4)(Q)\frac{\text{thousands of gallons}}{\text{year}}$. For a flow rate of 3,315 Nm^3/min

(117,000 scfm), the total cooling water requirement is 6.03×10^7 thousands of gallons/year.

The electrical usage rate for the spray chamber is calculated, using information given in reference 6 and adding 10 percent as a design contingency, to be $(1.59 \times 10^3)(Q)$kWh/yr. For a flow rate of 3,315 Nm^3/min (117,000 scfm), the electrical usage rate is 5.27×10^6 kWh/yr.

For the coldside ESP, the total electrical usage rate is composed of both the usage by the ESP--given as 0.474 (QT) in Section 8.2.2.2--and by the fan (which can be calculated to be 16 kWh/yr-acfm, as in Section 8.3.2, assuming a pressure drop of 10 inches H_2O, which is less than that for the baghouse). For a flow rate of 3,315 Nm^3/min (117,000 scfm) at 110° C (230° F) or 4,205 Am^3/min (148,300 acfm), the total electrical usage rate for the ESP is 3.23×10^6 kWh/yr. For the baghouse, the total electrical requirement is given as 25 kWh/yr-acfm in Section 8.3.2. Thus, for 4,205 Am^3/min (148,300 acfm), the total electrical usage rate is 3.71×10^6 kWh/yr. The total operating cost for the baghouse is $0.50 million, and the total annualized cost is $0.94 million. Based on the methodology of Section 8.2.2.1, the total operating cost for the spray chamber is $0.59 million, and the total annualized cost is $1.07 million. The total operating cost for the ESP is $0.60 million, and the total annualized cost is $1.16 million. For the Baseline Case (i.e., hot ESP), the installed capital costs are $2.28 million, operating costs are $0.34 million, and annualized costs are $0.71 million.

Thus, the total costs for a spray chamber and either an ESP or a baghouse may be summarized as follows:

Option	Total capital cost	Total operating cost	Total annualized cost
Spray chamber/ ESP	$6.4 million	$1.2 million	$2.2 million
Spray chamber/ baghouse	$5.6 million	$1.1 million	$2.0 million
Baseline/hot ESP	$2.3 million	$0.3 million	$0.7 million

8.5 PROCESS COSTS

8.5.1 Capital Costs

The capital costs of a model copper smelter with a multihearth roaster-reverberatory furnace-converter (MHR-RV-CV) configuration designed to process 1,364 Mg/day (1,500 tons/day) of concentrate were developed with published information.[1] The costs include concentrate receiving and storage, flux handling and preparation, roasting and dust recovery, reverberatory smelting and heat recovery, matte converting, anode furnace smelting and casting, and fugitive particulate matter capture. The total capital cost for this smelter is $208 million. This includes all process equipment and all pollution control equipment required under the existing NSPS.

The capital costs of a smelter with a flash furnace-converter (FF-CV) configuration using Outokumpu technology was also developed with reported costs.[22 23] Based on a concentrate throughput rate of 1,364 Mg/day (1,500 tons/day), the estimated total capital cost for this smelter is $180 million. This includes all process equipment and all pollution control equipment required under the existing NSPS.

8.5.2 Annualized Costs

Operating costs for base case greenfield smelters include the same elements as for the Baseline Cases (see Section 8.3) except for costs associated with operation of fugitive capture systems. The estimated annualized process cost (which includes control costs) is $43.4 million for the MHR-RV-CV smelter and $36.9 million for the FF-CV smelter.

8.6 EXPANSION SCENARIOS

Expansion scenarios considered are discussed in Section 6.4. Table 6-6 shows the smelter configuration, expansion option configuration, percent expansion achieved, and applicable control alternatives. This table is reproduced herein for convenience as Table 8-6.

There are four expansion options given in Table 8-6: oxygen enrichment, oxyfuel burners, conversion to calcine charge, and conversion to flash smelting. Control alternatives for the expanded reverberatory furnaces selected for analysis include the following (see also Section 6.2):

TABLE 8-6. MODEL PLANT EXPANSION SCENARIOS

Scenario	Model	Unit expanded	Percent capacity increase	Expansion option	Control option, expanded smelting furnace[a]
1	MHR-RV-CV	RV	20	Oxygen enrichment	PB-SC/SA
2	MHR-RV-CV	RV	20	Oxygen enrichment	LL
3	MHR-RV-CV	RV	20	Oxygen enrichment	MgO-SC/SA
4	MHR-RV-CV	RV	20	Oxygen enrichment	NH_3-SC/SA
5	MHR-RV-CV	c	50	Flash furnace	DC/DA[d]
6	MHR-RV-CV	c	100	Flash furnace	DC/DA[d]
7	RV-CV	RV	20	Oxygen enrichment	PB-SC/SA
8	RV-CV	RV	20	Oxygen enrichment	LL
9	RV-CV	RV	20	Oxygen enrichment	MgO-SC/SA
10	RV-CV	RV	20	Oxygen enrichment	NH_3-SC/SA
11	RV-CV	RV+New CV	50	Oxy-fuel burners	PB-DC/DA
12	RV-CV	RV+New CV	50	Oxy-fuel burners	LL
13	RV-CV	RV+New CV	50	Oxy-fuel burners	MgO-DC/DA
14	RV-CV	RV+New CV	50	Oxy-fuel burners	NH_3-DC/DA
15	RV-CV	RV+New FBR+CV	40	Conversion to calcine charge	Not required[b]
16	RV-CV	c	50	Flash furnace	DC/DA[d]
17	RV-CV	c	100	Flash furnace	DC/DA[d]
18	FBR-RV-CV	RV	20	Oxygen enrichment	PB-SC/SA
19	FBR-RV-CV	RV	20	Oxygen enrichment	LL
20	FBR-RV-CV	RV	20	Oxygen enrichment	MgO-SC/SA
21	FBR-RV-CV	RV	20	Oxygen enrichment	NH_3-SC/SA
22	FBR-RV-CV	c	60	Flash furnace	DC/DA[d]
23	EF-CV	EF+New FBR+CV	40	Conversion to calcine charge	DC/DA[d]
24	EF-CV	e	50	Flash furnace	DC/DA[d]
25	EF-CV	e	100	Flash furnace	DC/DA[d]
26	FF-CV	FF	20	Oxygen enrichment	DC/DA

[a]Control option covers only smelting furnace stream. Existing roasters and converters controlled by SC/SA acid plant under Scenarios 1 through 17. Existing roasters, smelting furnaces, and converters controlled by DC/DA acid plant under Scenario 18. New roasters and converters controlled by DC/DA acid plant under all scenarios.

[b]No control required; existing plant postexpansion emissions are less than preexpansion. New converter and roaster controlled by DC/DA.

[c]Existing reverberatory furnace replaced by a flash smelting furnace.

[d]For control of new flash furnace.

[e]Existing electric furnace replaced by a flash smelting furnace.

CV = Converter.
DC/DA = Double contact/double absorption acid plant.
EF = Electric furnace.
FBR = Fluid-bed roaster.
FF = Flash furnace.
LL = Limestone FGD on partial converter stream.
MgO = Magnesium oxide FGD on partial converter stream.
MHR = Multihearth roaster.
NH_3 = Cominco NH_3 FGD on partial converter stream.
PB = Partial blending.
RV = Reverberatory furnace
SC/SA = Single contact/single absorption acid plant.

- Partial blending of the reverberatory furnace gas stream with the roaster and converter streams and processing the combined stream in an SC/SA acid plant. A DC/DA acid plant is used to process those gas streams that result from the addition of a new roaster or converter.

- Processing the reverberatory furnace gas stream in a limestone FGD.

- Processing the reverberatory furnace gas stream in a MgO or NH_3 FGD, blending the resulting strong SO_2 stream with the roaster and converter streams, and processing the combined stream in an SC/SA acid plant. A DC/DA acid plant is also used when oxyfuel burners are used to expand the reverberatory furnace capacity.

For expanded flash furnaces or electric furnaces (Scenarios 23 and 26) and conversion to flash smelting (Scenarios 5, 6, 16, 17, and 22), SO_2 control is achieved with expanded DC/DA acid plant capacity. For conversion of an electric furnace to a flash furnace, no additional DC/DA and plant capacity are required.

Incremental capital and annualized costs are presented in Section 8.6.1 for the physical and operational changes that result in the increased production capacity. Incremental costs for reducing the increased emissions associated with each expansion option to preexpansion levels are presented in Section 8.6.2.

Table 8-7 summarizes the input data used to calculate the incremental capital, operating, and annualized costs for each expansion scenario.

8.6.1 Incremental Capital and Annualized Process Costs for Expansion Scenarios

8.6.1.1 Oxygen Enrichment. Expansion Scenarios 1 through 4, 7 through 10, 18 through 21, and 26 require the addition of oxygen enrichment to an existing smelting furnace to attain a 20-percent expansion.

The cost for adding oxygen enrichment to an existing reverberatory furnace is considered to be approximately the same as for a new reverberatory furnace because the hardware and control systems would be identical. No additional process equipment is required for these expansion scenarios involving oxygen enrichment. Thus, the capital cost for oxygen enrichment is $510,000, as developed in Section 8.2.1.7.

TABLE 8-7. INPUT DATA TO COST ESTIMATIONS, EXPANSION OPTIONS

Expansion option	Acid plant data									
	Existing plant				Expanded plant			New DC/DA		
	Type	Nm^3/min	scfm)	SO_2 (%)	Nm^3/min	(scfm)	SO_2 (%)	Nm^3/min	(scfm)	SO_2 (%)
Base Case I	SC/SA	3,660	(129,200)	3.5	NA	NA	NA	NA	NA	NA
1	SC/SA	3,660	(129,200)	3.5	5,285	(187,000)	3.5	NA	NA	NA
2	SC/SA	3,660	(129,200)	3.5	4,390	(155,000)	3.5	NA	NA	NA
3	SC/SA	3,660	(129,200)	3.5	4,490	(159,000)	3.5	NA	NA	NA
4	SC/SA	3,660	(129,200)	3.5	4,490	(159,000)	3.5	NA	NA	NA
5[a]	SC/SA	3,660	(129,200)	3.5	2,585	(92,000)	3.5	1,665	(59,000)	10.0
6[a]	SC/SA	3,660	(129,200)	3.5	3,450	(122,000)	3.5	2,190	(78,000)	10.0
Base Case II	SC/SA	4,510	(159,000)	3.5	NA	NA	NA	NA	NA	NA
7	SC/SA	4,510	(159,000)	3.5	6,315	(223,000)	3.5	NA	NA	NA
8	SC/SA	4,510	(159,000)	3.5	5,430	(198,000)	3.5	NA	NA	NA
9	SC/SA	4,510	(159,000)	3.5	5,580	(197,000)	3.5	NA	NA	NA
10	SC/SA	4,510	(159,000)	3.5	5,490	(194,000)	3.5	NA	NA	NA
11	NA	NA	NA	NA	NA	NA	NA	2,715	(96,000)	3.5
12	NA	NA	NA	NA	NA	NA	NA	1,250	(45,000)	3.5
13	NA	NA	NA	NA	NA	NA	NA	1,680	(60,000)	5.0
14	NA	NA	NA	NA	NA	NA	NA	1,425	(51,000)	5.0
15	NA	NA	NA	NA	NA	NA	NA	11,765	(63,000)	6.0
16[a]	SC/SA	4,510	(159,000)	3.5	2,835	(100,000)	3.5	1,905	(68,000)	10.0
17[a]	SC/SA	4,510	(159,000)	3.5	3,780	(134,000)	3.5	2,540	(90,000)	10.0
Base Case III	SC/SA	3,170	(112,000)	3.5	NA	NA	NA	NA	NA	NA
18	SC/SA	3,170	(112,000)	3.5	4,120	(146,000)	5.5	NA	NA	NA
19	SC/SA	3,170	(112,000)	3.5	3,390	(120,000)	7.0	NA	NA	NA
20	SC/SA	3,170	(112,000)	3.5	3,420	(121,000)	7.0	NA	NA	NA
21	SC/SA	3,170	(112,000)	3.5	3,420	(121,000)	7.0	NA	NA	NA
22[a]	SC/SA	3,170	(112,000)	3.5	2,135	(76,000)	3.5	2,070	(73,000)	10.0
Base Case IV	DC/DA	6,450	(231,000)	4.0	NA	NA	NA	NA	NA	NA
23	DC/DA 1	6,450	(231,000)	4.0	NA	NA	4.0	NA	NA	NA
	DC/DA 2	2,460	(27,000)	3.5						
Base Case V	DC/DA	3,400	(121,000)	6.0	NA	NA	NA	NA	NA	NA
24	DC/DA	6,450	(231,000)	4.0	c	c	c	NA	NA	NA
25	DC/DA	6,450	(231,000)	4.0	c	c	c	NA	NA	NA
26	DC/DA	3,400	(121,000)	6.0	NA	NA	6.0	NA	NA	NA

NA = Not applicable.

[a]New flash furnace as replacement for reverberatory furnace/roaster.

[b]After dilution to 11 percent SO_2.

[c]Existing acid plant has sufficient capacity to handle expanded smelter SO_2 streams.

The incremental annualized costs for oxygen enrichment include the cost of oxygen, given as $47/ton (see Section 8.2.2.4), and maintenance and capital charges related to the hardware (no additional labor is required). The oxygen usage rates for expansion scenarios requiring oxygen are shown in Table 8-7 and are used to calculate the oxygen cost. The maintenance and capital charges associated with the oxygen enrichment and oxyfuel hardware are calculated with the methodology of Section 8.2.2. Based on these values, the incremental operating and annualized costs were calculated with the results shown below:

Expansion scenario	Expansion option	Incremental capital costs	Incremental operating costs	Incremetal annualized costs
1 through 4	Oxygen enrichment	$0.5 million	$3.0 million	$3.1 million
7 through 10	Oxygen enrichment	$0.5 million	$2.6 million	$2.7 million
18 through 21	Oxygen enrichment	$0.5 million	$0.6 million	$0.7 million
26	Oxygen enrichment	$0.5 million	$1.4 million	$1.4 million

8.6.1.2 Oxyfuel Burners. Expansion Scenarios 11 through 14 require the addition of oxyfuel burners to greenfield reverberatory furnaces to achieve a 50-percent expansion. In addition, a new converter capable of processing 391 Mg/day (430 tons/day) is required.

The capital cost of the hardware required for oxyfuel burner installation is estimated to be $1.0 million, as developed in Section 8.2.1.8. This hardware is identical to that required for a new reverberatory furnace, and the cost is thus the same. Based on information given in Reference 1, the capital cost of a converter for these expansion scenarios was estimated at $31.8 million.

The annualized costs were developed with the methodology of Section 8.2.2 and the oxygen usage rates shown in Table 8-7. Additional raw materials and operating labor are also required for the new converter and were estimated from information given in Reference 1. Based on this information, the following results were obtained:

Expansion scenario	Expansion option	Incremental capital costs	Incremental operating costs	Incremental annualized costs
11 through 14	Oxyfuel burners	$1.0 million	$6.0 million	$6.2 million
	Converter	$31.8 million	$3.8 million	$9.0 million

8.6.1.3 Conversion to Calcine Charge. Expansion Scenarios 15 and 23 require conversion to calcine charge to achieve a 40-percent expansion. Expansion Scenario 15 involves the conversion of a green-charged reverberatory smelting furnace to calcine charge, while Expansion Scenario 23 involves the conversion of an electric furnace to calcine charge. For both scenarios, a new fluid-bed roaster to handle 1,910 Mg/day (2,100 tons/day) of feed is required. A new converter is also required for both scenarios. For Scenario 15, the new converter handles 340 Mg/day (373 tons/day), and for Scenario 23, the new converter handles 392 Mg/day (431 tons/day).

For Expansion Scenario 15, the capital costs of conversion to calcine charge consist of modifications to the reverberatory furnace and the costs of the fluid-bed roaster and converter. Modifications to the reverberatory furnace include (see Section 3.4.4) adding a solids handling system between the roaster and reverberatory furnace (Wagstaff feeders) and installing in the wall a line of water-cooled copper plates 12 to 18 inches high because the calcine has a smaller angle of repose and does not dependably protect the refractories at the slag line. The capital cost for these changes is estimated to be $350,000, based on a rebuild of a reverberatory furnace, which, while not designed specifically to convert a reverberatory to calcine charge, did include a comparable scale of labor and materials.[24] Based on information given in Reference 1, the capital costs of a fluid-bed roaster and a converter for this scenario were estimated at $15.8 million and $27.8 million, respectively.

For Expansion Scenario 23, there is no modification necessary to the electric furnace to convert to calcine charge (see Section 3.4.4). The capital costs thus consist of the cost of the new fluid-bed roaster and new converter. Based on information given in Reference 1, the

cost of the new fluid-bed roaster is $15.8 million and the cost of the new converter is $36.2 million.

The annualized costs for Expansion Scenarios 15 and 23 were computed with the methodology of Section 8.2.2. For the fluid-bed roaster, fuel oil is used to preheat the fluidizing air and during startup. Electricity is used for the fluidizing fans with a much smaller amount needed for solids handling and other operations. Electricity and silica flux are used in the converter. Flux is added to form the matte layer, and electricity is required for the air compressors used to blow the converter charge. Slight differences in the annualized costs for Scenarios 15 and 23 are due to differences in feed composition. Additional labor is required for both the fluid-bed roaster and the converter. The additional labor, raw material, and utility usage rates above the preexpansion levels are shown below as estimated from published information:[1]

	Expansion Scenario 13	Expansion Scenario 18
Silica flux	95,700 tons/year	95,700 tons/yr
Additional operating supplies*	$0.45/ton conc.	$0.45/ton conc.
Direct operating labor	5 persons/shift	5 persons/shift
Bunker C fuel oil	6.1×10^6 gal/yr	5.8×10^6 gal/yr
Electricity	14.2×10^6 kWh/yr	13.9×10^6 kWh/yr

*This includes various additives, operating materials, and miscellaneous expenses. For both expansion scenarios, 545 Mg/day (600 tons/day) additional concentrate on a dry basis are processed.

The results of the calculation of capital and annualized costs for Expansion Scenarios 15 and 23 are shown below:

Expansion scenario	Expansion option	Annualized capital costs (10^6 \$)	Annualized operating costs (10^6 \$)	Annualized costs (10^6 \$)
15	Reverb modifications	0.4	-0-	0.1
	Fluid-bed roaster	15.8	6.7	9.3
	Converter	27.8	3.8	8.3
23	Fluid-bed roaster	15.8	6.7	9.3
	Converter	30.8	3.8	8.8

8.6.1.4 Conversion to Flash Smelting. Expansion Scenarios 5, 6, 16, 17, 22, 24, and 25 involve replacement of a green-charged reverberatory furnace or a roaster and calcine charge reverberatory furnace with an oxygen flash furnace. For scenarios 5, 16, and 24, the flash furnace is sized to result in a 50-percent expansion; for scenarios 6, 17, and 25, a 100-percent expansion; and for scenario 22, a 60-percent expansion. Because of the higher matte grade (55 percent), the existing converter capacity should be adequate to handle the increased throughput without modification. Process capital costs include the cost of the flash smelting furnace and additional dryer capacity. The capital cost of the new oxygen flash furnace and additional dryer capacity, based on information contained in Reference 25, is \$36.9 million. Operating costs were developed with the methodology described in Section 8.2.2 and the oxygen usage rates shown in Table 8-7. The following process cost estimates were developed on this basis.

Conversion from reverberatory to flash smelting results in a considerable reduction in process operating costs because of the elimination of the fuel requirements for reverberatory furnaces. For a reverberatory furnace processing 1,364 Mg/day (1,500 tons/day) of concentrate, this is estimated to be about 69.5 million using 4.5×10^6 Btu per ton of charge. As a result, for scenarios 5, 16, and 22, operating costs are less than baseline costs, hence the net reduction in incremental operating costs as shown in the following table (figures in parentheses represent an incremental reduction in costs).

Expansion scenario	Expansion option	Incremental capital costs ($\$10^6$)	Incremental operating costs ($\$10^6$)	Incremental annualized costs ($\$10^6$)
5	New flash smelter	31.0	(2.0)	3.1
6	New flash smelter	36.9	7.8	13.8
16	New flash smelter	31.0	(1.3)	3.8
17	New flash smelter	36.9	8.6	14.6
22	New flash smelter	32.2	(3.3)	2.0
24	New flash smelter	31.0	7.1	12.1
25	New flash smelter	36.9	19.8	25.8

8.6.2 Incremental Capital and Annualized Costs for Control

8.6.2.1 Capital Costs. Capital costs for SC/SA sulfuric acid plants were obtained from data in Reference 1 and are shown graphically in Figure 8-5. Based on this information, the following mathematical expression relating capital costs to flow rate and SO_2 concentration, was developed:

$$\ln \text{Cost} = 0.1325 + 0.351\ (\%\ SO_2)^{0.152} + 0.731\ (\%\ SO_2)^{-0.087}\ [\ln Q - 3.418]$$

where

Cost is total capital cost in millions of June 1981 dollars

% SO_2 is expressed as a percent, not a fraction (i.e., 4% SO_2 would be input as 4.0)

Q is in Nm^3/min.

In estimating the incremental capital costs for expansion scenarios involving an expanded SC/SA acid plant (Scenarios 1 through 4, 7 through 10, and 18 through 21) to treat expanded roaster and/or converter streams and the reverberatory furnace slipstream, the costs for an entire new SC/SA acid plant, based on postexpansion flow rates and

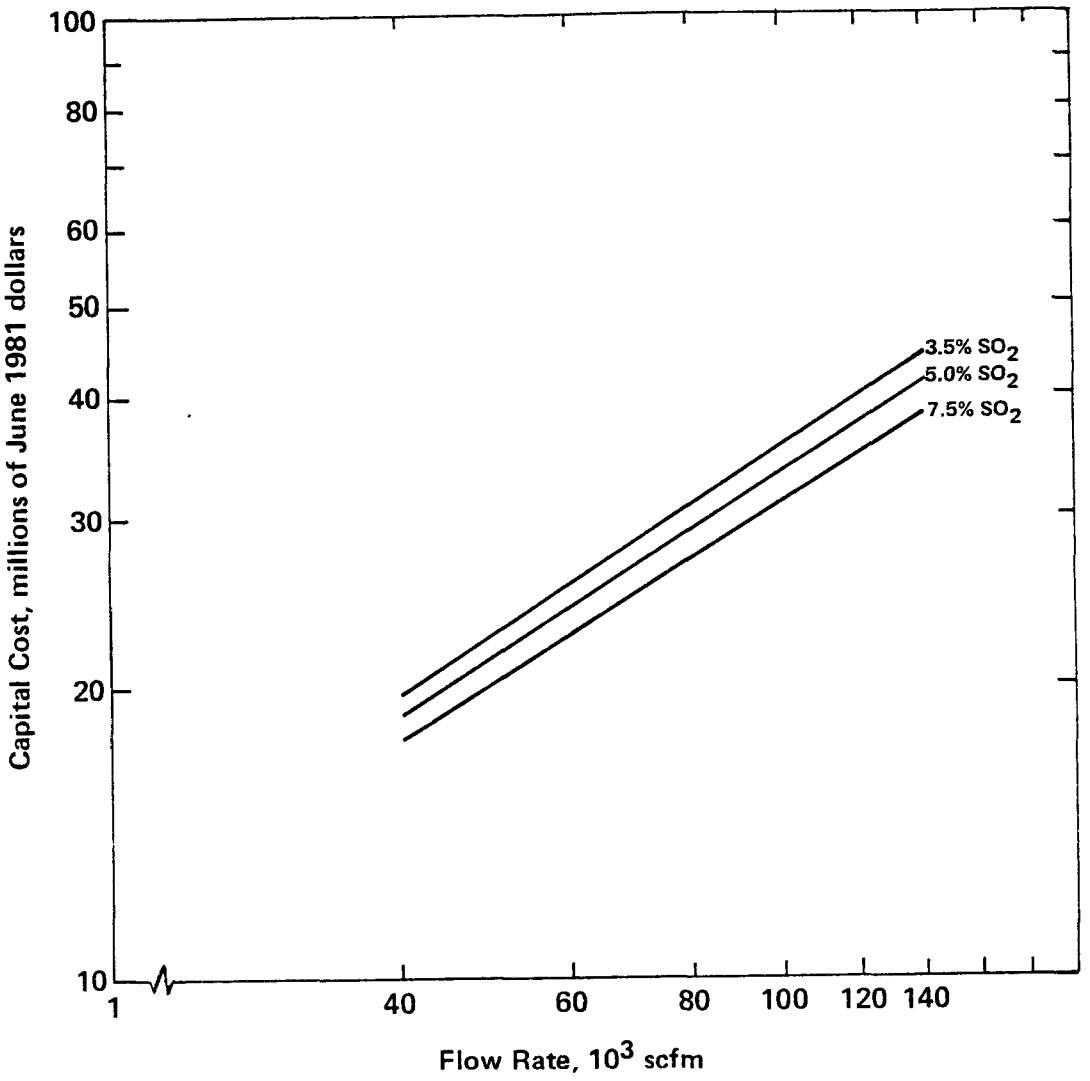

Note: Costs include gas cleaning and conditioning, absorption and acid production, auxiliary preheating, storage facilities, materials handling, and control equipment.

Source: Reference 1.

Figure 8-5. Capital cost of an SC/SA sulfuric acid plant.

SO_2 concentrations (shown in Table 8-7), were calculated with the equation developed above. From this value was subtracted the cost, calculated with the same equation, for an entire new SC/SA acid plant using the preexpansion flow rates and SO_2 concentrations. The difference between these two values was then designated as the cost of expanding the existing acid plant. It is recognized that the cost of expanding an existing acid plant is likely to be site-specific. For example, if the existing acid plant were old, it might be infeasible to expand it. In such a case, the control costs could be the cost of a new plant at postexpansion flows. In most cases, plant data upon which individual site analyses could be made are not available to EPA. However, EPA is mandated to assess the environmental, energy, and economic impacts as an essential part of the standard development process. Model plant analysis has been determined to be a reasonable and cost-effective manner in which to perform these assessments. Model plants are not intended to represent what an individual plant should look like, but rather to form the basis for subsequent analyses of the impact of the regulation on the industry as a whole.

The same procedure was followed in estimating incremental capital costs using the cost relationship in Section 8.2.1.1 for scenario 24 that requires expansion of an existing DC/DA acid plant to process the increased flash furnace and converter flows.

New DC/DA acid plants are required for expansion scenarios 5, 6, 11 through 17, 22, and 23. For scenarios 5, 6, 16, 17, and 22, in which flash furnaces replace reverberatory furnaces, the new DC/DA acid plants are required to process the strong SO_2 offgas streams from the new flash furnaces as required by the existing NSPS. For scenarios 7 through 11, the new DC/DA plants are required to treat the strong SO_2 offgas streams from new roasters and/or converters as well as the slipstream to reduce reverberatory furnace SO_2 emissions to preexpansion levels. For scenario 23, the total strong stream flows after expansion are large enough to justify a new DC/DA acid plant in addition to the existing plant. The new plant will treat the new fluid-bed roaster and expanded electric furnace offgas streams; the

existing plant, both new and old converter flows. Costs of these new DC/DA acid plants are estimated as described in Section 8.2.11.

The incremental capital costs for the MgO, NH_3, and limestone FGD systems (Scenarios 2, 3, 4, 8, 9, 10, 12, 13, 14, 19, 20, and 21) for the expanded plants were calculated with the equations developed in Sections 8.2.1.3, 8.2.1.4, and 8.2.1.5, respectively. The input flow rates and SO_2 concentrations to these equations are taken from Table 8-7 under the column labeled "New FGD requirement." It can be seen that some of the flow rates are small and fall out of the range of the costs given in Figures 8-2 (MgO), 8-3 (NH_3), and 8-4 (limestone). Nonetheless, the equations given in Sections 8.2.1.3 through 8.2.1.5 were used to calculate FGD capital costs because they are considered to be reasonable approximations of the costs for systems in this low flow range.

8.6.2.2 Incremental Annualized Costs. Incremental annualized costs for the DC/DA acid plants were estimated using the procedures described in 8.2.2. Annualized costs for the SC/SA acid plant were based on the following raw material, labor, and utility usage rates:

Labor[1]	:	3 persons/shift
Process water[1]	:	$\{[11{,}769-1{,}051 \ln [(Q)(\% SO_2)]\} (0.0115)(Q)(\% SO_2)$ thousands of gal/yr
Cooling water[1]	:	$(.12 \times 10^3)(Q)$ thousands of gal/yr
Electricity[1]	:	$[3.64 \times 10^4 - 1.370(Q)] (Q)$ kWh/yr
Limestone[6]	:	$(0.482) (Q)$ tons/yr,

where

Q is in Nm^3/min

% SO_2 is expressed as a percent, not a fraction (i.e., 4% SO_2 would be input as 4.0).

The incremental annualized costs for the expanded SC/SA acid plants were calculated in the same manner as the capital costs; i.e., the annualized costs for the "existing plant" were subtracted from the annualized costs for the expanded plant.

The incremental annualized costs for the FGD systems were calculated as discussed in Sections 8.2.2.3 (MgO), 8.2.2.4 (NH_3), and 8.2.2.5 (limestone). The input labor, raw material, and utility usage rates for the annualized costs are the same as those given in these sections. The input flow rates and SO_2 concentrations are taken from Table 8-7.

Supplemental heat is required for the acid plants required in Expansion Scenarios 1 and 7 (see Table 8-7). Table 8-8 is the result of a calculation of the supplemental heat required for each of these scenarios using the methodology discussed in Section 8.2.2.

A detailed itemized list of the process and control costs for each expansion scenario, except those involving conversion to flash smelting, is given in Appendix O. Costs for the flash smelting option are detailed in Section 8.6.1.4.

8.6.3 Summary of Expansion Scenario Incremental Costs

Table 8-9 summarizes the incremental capital annualized costs for each expansion scenario. It should be noted that the incremental costs presented include the incremental costs both for the process change and for controlling SO_2 emissions from all offgas streams.

For subsequent analyses, the cost of control of new facilities producing strong SO_2 offgas streams (i.e., new roasters, flash furnaces, and converters) is in the baseline. Costs for weak stream control, (i.e., reverberatory furnace offgas streams) are the incremental costs attributable to the NSPS. Only the costs of SO_2 control on the reverberatory furnace slipstream are attributable to the standard. All other costs are included in the baseline.

8.7 COST-EFFECTIVENESS

Cost-effectiveness of the alternative techniques for the control of weak SO_2 streams at new greenfield smelters is shown in Table 8-10. Cost-effectiveness ranges from $53 per Mg of SO_2 removed for Option I-G (oxyfuel) to $203 for Option I-B (MgO FGD plus acid plant). Option I-G is also the least costly, requiring a capital investment of $55.2 million, or an incremental increase over the baseline case of $8.9 million.

TABLE 8-8. SUMMARY OF INCREMENTAL COSTS INCURRED DUE TO ACID PLANT PREHEATER OPERATION

Plant[a]	Type of acid plant	Heat deficiency per 24-hour cycle (Btu)	Estimated increase in annual operating cost
Expansion Scenario 1	SC/SA	2.0×10^7	$60,000
Expansion Scenario 7	DC/DA	5.2×10^6	$14,300

[a]See Table 8-7.

TABLE 8-9. EXPANSION COSTS
(INCLUDES COST OF CONTROLLING SO_2 EMISSIONS FROM NEW ROASTERS AND CONVERTERS AS REQUIRED BY EXISTING NSPS)

Expansion scenario	Configuration[d]	Expansion capability[a] (%)	Expansion capability[a] (Mg blister copper)	Incremental capital costs ($\$10^3$) (June 1981 dollars) Process	Control	Total	Incremental operating costs ($\$10^3$)[b] (June 1981 dollars) Process	Control	Total	Total incremental annualized costs[c] ($\$10^3$) (June 1981 dollars total)
1	Oxygen enrichment	20	20,910	510	10,910	11,420	3,040	2,960	6,000	7,860
2	Option 1 plus limestone FGD	20	20,910	510	15,560	16,070	3,040	3,670	6,710	9,330
3	Option 1 plus MgO FGD	20	20,910	510	17,590	18,100	3,040	4,370	7,410	10,350
4	Option 1 plus NH_3 FGD	20	20,910	510	13,460	13,970	3,040	4,760	7,800	10,080
5	Conversion to flash smelting	50	52,260	31,010	23,810	54,820	(1,970)	2,910	940	9,860
6	Conversion to flash smelting	100	104,520	36,860	28,350	65,210	7,750	5,540	13,290	23,900
7	Oxygen enrichment	20	21,380	510	11,360	11,870	2,590	2,960	5,550	7,480
8	Option 1 plus limestone FGD	20	21,380	510	17,510	18,020	2,590	4,300	6,890	9,82
9	Option 1 plus MgO FGD	20	21,380	510	20,200	20,710	2,590	5,450	8,040	11,420
10	Option 1 plus NH_3 FGD	20	21,380	510	15,580	16,090	2,590	6,210	8,800	11,420
11	Oxyfuel burners, new CV, new DC/DA	50	53,450	32,800	40,010	72,810	9,790	9,740	19,530	31,380
12	Option 11 plus limestone FGD	50	53,450	32,800	41,320	74,210	9,790	9,940	19,730	31,800
13	Option 11 plus MgO FGD	50	53,450	32,800	47,460	80,260	9,790	13,230	23,020	36,080
14	Option 11 plus NH_3 FGD	50	53,450	32,800	37,420	70,220	9,790	14,520	24,310	35,740
15	Converter to calcine charge, new FBR, new CV, new DC/DA	40	42,760	44,000	26,840	70,840	10,520	6,630	17,150	28,680
16	Conversion to flash smelting	50	53,450	31,010	25,890	56,900	(1,300)	3,810	2,510	11,780
17	Conversion to flash smelting	100	106,910	36,860	30,910	67,770	8,630	7,280	16,910	26,940
18	Oxygen enrichment	20	18,710	510	2,940	3,450	620	1,430	2,050	2,610
19	Option 18 plus limestone FGD	20	18,710	510	5,700	6,210	620	1,860	2,480	3,490
20	Option 18 plus MgO FGD	20	18,710	510	6,970	7,480	620	2,230	2,850	4,070
21	Option 18 plus NH_3 FGD	20	18,710	510	2,910	3,420	620	2,370	2,990	3,240
22	Conversion to flash smelting	60	56,310	32,240	26,650	58,890	(3,290)	5,230	1,940	11,530
23	Conversion to calcine charge, new FBR, new CV	40	54,790	46,600	37,500	84,100	10,470	9,030	19,500	33,180
24	Conversion to flash smelting	50	68,490	31,010	0	31,010	7,080	0	7,080	12,130
25	Conversion to flash smelting	100	136,980	36,860	0	36,860	19,800	0	19,800	25,800
26	Oxygen enrichment	20	20,240	510	5,090	5,600	1,360	2,270	3,630	4,540

[a]Based on a base case feed of the following composition:

Scenario	Copper content of feed (%)
1-6	21.9
6-17	22.4
17-22	19.6
23-25	28.7
26	21.2

[b]Based on 350 day/year operation.

[c]Based on 10 percent discount rate over 10 years or 16.275 percent of capital costs

[d]FGD = Flue gas desulfurization
CV = Converter.
FBR = Fluid-bed roaster
DC/DA = Double contact/double absorption sulfuric acid plant
FF = Flash furnace.

TABLE 8-10 COST-EFFECTIVENESS: CONTROL OF REVERBERATORY FURNACE SO_2 EMISSIONS IN A NEW COPPER SMELTER (MULTIHEARTH ROASTERS, REVERBERATORY FURNACE, CONVERTER) PROCESSING HIGH-IMPURITY MATERIALS[a]

Control option	Emissions (Mg/yr)[b]		Capital costs ($\$10^3$)			Operating costs ($\$10^3$)			Annualized costs ($\$10^3$)[c]			Incremental annualized costs ($\$10^3$)	Cost-effectiveness ($/Mg SO_2 removed)
	Reverberatory furnace	Reduction from Base Case	Process[d]	Control	Total	Process[d]	Control	Total	Process[d]	Control	Total		
Baseline Case (no control on RV, MHR and CV to DC/DA)	73,360	0	162,000	46,280	208,280	31,110	12,320	43,430	57,480	19,850	77,330	--	--
Option I-A (Blending 45% of RV stream with MHR and CV, DC/DA)	40,910	34,450	162,000	61,190	223,190	31,110	16,870	47,980	57,480	26,830	84,310	6,980	202
Option I-B (RV to MgO FGD; strong stream, MHR, and CV to DC/DA)	8,460	64,900	162,000	74,000	236,000	31,110	20,950	52,060	57,480	33,000	90,480	13,150	203
Option I-C (RV to NH_3 FGD; strong stream, MHR, and CV to DC/DA)	8,460	64,900	162,000	62,840	224,840	31,110	22,340	53,450	57,480	32,570	90,050	12,720	196
Option I-D (RV to lime/limestone FGD, MHR and CV to DC/DA)	7,340	66,020	162,000	69,740	231,740	31,110	17,730	48,840	57,480	29,080	86,560	9,230	140
Option I-E (Blending 100% RV stream with MHR and CV, DC/DA)	1,250	72,110	162,000	74,230	236,230	31,110	20,640	51,750	57,480	32,720	90,200	12,870	179
Option I-F (O_2 enrichment, blending 100% RV with MHR and CV, DC/DA)	1,250	72,110	162,000	67,200	229,200	29,390	20,000	49,390	55,760	30,930	86,690	9,360	130
Option I-G (Oxyfuel, blending 100% RV with MHR and CV, DC/DA)	1,250	72,110	162,000	55,220	217,220	27,290	18,520	45,810	53,660	27,510	81,170	3,840	53

[a]Multihearth roasters and converters are covered by existing NSPS.

[b]Based on 350 days per year operation.

[c]Based on 10 percent discount rate over 10 years or 16.275 percent of capital costs.

[d]Cost of DC/DA to control multihearth roaster and converter included in Baseline Case.

RV = Reverberatory furnace

MHR = Multihearth roaster

CV = Converter

DC/DA = Double contact/double absorption sulfuric acid plant

TABLE 8-11. COSTS FOR C NTROL OF FUGITIVE PARTICULATE MATTER EMISSIONS BY SOURCE, NEW GREENFIELD SMELTER
(All costs in thousands of June 1981 dollars)

Source		Emissions (Mg/yr)[a] Total[b]	Reduction from base case[c]	Capital costs ($10³) (one cost per source)	Operating costs ($10³)	Incremental annualized costs[d] ($10³)	Cost-effectiveness ($/Mg)
I MHR				571	141	234	462
Calcine discharge		568	506				
II RV				1,539	283	533	8,460
Matte tapping		37	33				
Slag skimming		34	30				
III FF-ESCF				2,669	415	849	7,935
FF-matte tapping		22	19				
FF-slag skimming		44	39				
ESCF-matte tapping		8	7				
ESCF-slag skimming		49	42				
IV CV-BE		1,094	1,028	12,213	1,850	4,185	4,071
V CV-AC		1,094	975	4,133	728	1,401	1,437
VI CV (w/FF)	BE	798	750	12,213	1,850	4,185	5,580
	AC	798	711	4,133	728	1,401	1,970

[a]Based on 350 day/year operation.

[b]See Section 3.3.4, emissions are based on 1,360 Mg/day feed and 352 Mg/day blister copper.

[c]Based on 90 percent capture, except for building evacuation that uses 95 percent, and 99 percent collection efficiency.

[d]Based on 10 percent discount rate over 10 years or 16.275 percent of capital costs, see Appendix N.

MHR = Multihearth roaster.

RV = Reverberatory furnace.

FF = Flash furnace.

ESCF = Electricity slag cleaning furnace.

CV = Converter.

BE = Building evacuation.

AC = Air curtain.

TABLE 8-12. COST-EFFECTIVENESS OF EXPANSION SCENARIOS

Base case	Expansion scenario	Incremental annualized costs ($10³)	Production (Mg blister/yr)		SO_2 removed (Mg/yr)	Cost-effectiveness SO_2 removal, Existing NSPS		
		Existing NSPS	Total	Incremental		$/Mg SO_2 removed	$/Mg total blister	$/Mg incremental blister
Smelters processing clean materials								
I[a]	1	7,860	125,430	20,910	47,340	166	63	376
	2	9,330	125,430	20,910	47,340	197	74	446
	3	10,350	125,430	20,910	47,340	219	83	495
	4	10,080	125,430	20,910	47,340	213	80	482
	5	9,860	156,820	52,270	59,180	167	63	189
	6	23,900	209,110	104,550	118,360	202	114	229
II	7	7,480	128,290	21,380	54,220	138	58	350
	8	9,820	128,290	21,380	54,220	181	77	459
	9	11,420	128,290	21,380	54,220	211	89	534
	10	11,420	160,300	53,450	135,500	211	89	534
	11	31,380	160,300	53,450	135,500	232	196	587
	12	31,800	160,300	53,450	135,500	235	198	595
	13	36,080	160,300	53,450	135,500	266	225	675
	14	35,740	160,300	53,450	135,500	264	223	669
	15	28,680	149,670	42,760	108,440	264	191	671
	16	11,770	160,410	53,470	67,770	174	73	220
	17	26,940	213,880	106,940	135,540	199	126	252
III	18	2,610	112,250	18,710	55,170	47	23	140
	19	3,490	112,250	18,710	55,170	63	31	187
	20	4,070	112,250	18,710	55,170	74	36	218
	21	3,240	112,250	18,710	55,170	59	29	173
	22	11,530	149,720	56,140	82,760	139	77	205
IV	23	33,180	191,770	54,790	113,780	292	173	606
	24	12,130	205,520	68,510	71,110	171	59	177
	25	25,800	274,030	137,010	142,220	181	94	188
V	26	4,540	121,420	20,240	59,180	77	37	224

[a]Applicable to both clean and high-impurity materials.

TABLE 8-13. COST-EFFECTIVENESS, FUGITIVE PARTICULATE MATTER CONTROL, EXPANSION SCENARIOS[a]

Base case	Expansion scenarios	Converter			Smelting furnace		
		Annualized control costs ($\$10^3$)	Particulate removed (Mg/yr)	Incremental cost-effective-ness ($/Mg)	Annualized control costs ($\$10^3$)	Particulate removed (Mg/yr)	Incremental cost-effective-ness ($/Mg)
I[b]	1-4	-	-	-	640	70	9,140
	5	-	-	-	640	85	7,530
	6	-	-	-	640	110	5,820
II	7-10	-	-	-	640	75	8,530
	11-14	579	485	1,194	800	95	8,420
	15	579	390	1,485	746	90	8,290
	16	-	-	-	640	85	7,530
	17	-	-	-	640	110	5,820
III	18-21	-	-	-	640	65	9,850
	22	-	-	-	640	80	8,000
IV	23	579	355	1,631	746	100	7,460
	24	-	-	-	640	110	5,820
	25	-	-	-	640	145	4,410
V	26	-	-	-	640	65	9,850

[a]No new multihearth roaster required for any expansion scenario.

[b]Applicable to smelters processing clean or high-impurity material.

TABLE 8-14. INCREMENTAL COST DATA, LEAST COST EXPANSION SCENARIOS
(June 1981 dollars)

Smelter configuration	Expansion Scenario	Percent expansion	Baseline annualized costs ($\$10^3$)	Reverberatory furnace annualized costs ($\$10^3$)	Total annualized costs ($\$10^3$)	Incremental blister production Mg/yr	(tons/yr)
Smelters Processing Clean Materials							
I (MHR-RV-CV)	1	20	6,700	1,160	7,860	20,910	(23,000)
	5	50	9,860	--	9,860	52,270	(57,500)
	6	100	23,900	--	23,900	104,550	(115,000)
II (RV-CV)	7	20	6,460	1,020	7,480	21,380	(23,520)
	11	50	22,670	8,710	31,380	53,450	(58,800)
	15	40	28,680	--	28,680	42,760	(47,040)
	16	50	11,780	--	11,780	53,470	(58,820)
	17	100	26,940	--	26,940	106,940	(117,630)
III (FBR-CV-RV)	18	20	2,210	400	2,610	18,710	(20,580)
	22	60	11,530	--	11,530	56,340	(61,970)
IV (EF-CV)	23	40	33,180	--	33,180	54,790	(60,270)
	24	50	12,130	--	12,130	68,510	(75,360)
	25	100	25,800	--	25,800	137,010	(150,710)
V (FF-CV)	26	20	4,540	--	4,540	20,240	(22,260)
Smelters Processing High-Impurity Material							
I (MHR-RV-CV)	1	20	67,000	--	6,700	20,910	(23,000)

TABLE 8-15. INCREMENTAL COST DATA, FUGITIVE EMISSION CONTROL
LEAST COST EXPANSION SCENARIOS
June 1981 dollars

Smelter configuration	Expansion Scenario	Incremental annualized costs	
		Converter	Smelting furnace
I (MHR-RV-CV)[a]	1	0	640
	5	0	640
	6	0	640
II (RV-CV)	7	0	640
	11	580	800
	15	580	750
	16	0	640
	17	0	640
III (FBR-RV-CV)	18	0	640
	22	0	640
IV (EF-CV)	23	580	750
	24	0	640
	25	0	640
V (FF-CV)	26	0	640

[a]Also applicable to smelters processing high-impurity materials.

Cost-effectiveness ratios for fugitive controls are shown in Table 8-11. Cost-effectiveness of fugitive controls ranges from $462 per Mg of particulate matter removed for the multihearth roaster calcine discharge operation to $7,935 per Mg for smelting furnace matte tapping and slag skimming operations. For converter fugitive controls, the use of an air curtain and secondary hood is more cost effective than building evacuation, $1,437 per Mg versus $4,071 for the MHR-RV-CV smelter configuration and $1,970 per Mg versus $5,580 for the FF-CV configuration. The primary reason for these differences is the larger volume of air that must be moved in building evacuation systems, more than quadruple that moved with air curtain/secondary hood systems.

Cost-effectiveness ratios for the expansion scenarios analyzed are shown in Tables 8-12 and 8-13 for weak-stream SO_2 and fugitive particulate matter control, respectively. Incremental cost data for selected expansion scenarios are shown in Table 8-14. Baseline costs include control costs associated with strong stream control. Incremental annualized costs shown in Table 8-12 include control of both strong and weak SO_2 streams. These costs are partitioned into weak SO_2 stream costs, shown in Table 8-14, and strong SO_2 stream costs, included in baseline costs in Table 8-14 by the ratio of reverberatory furnace slipstream flow rates to acid plant average flow rates shown in Table 6-8. Fugitive emission control costs are shown in Table 8-15 for each of the least cost expansion scenarios.

8.8 REFERENCES

1. Weisenberg, I. J., and T. Archer, "Feasibility of Primary Copper Smelter Weak SO_2 Stream Control Relative to Reverberatory Furnace NSPS Exemption," Draft Final Report, July 1978.

2. Agarwal, J. C., and M. L. Loreth, "Preliminary Economic Analysis of SO_2 Abatement Technologies," Presented at the AIME Meeting, Chicago, February 22-26, 1981.

3. Hayashi, M., "Cost of Producing Copper from Chalcopyrite Concentrate as Related to SO_2 Emission Abatement," Bureau of Mines report 7957, U.S. Department of Interior, 1974, p. 30.

4. PEDCo Environmental, Inc., "User's Guide, Computerized Approach to Estimating SO_2 Scrubber Costs at Nonferrous Smelters," EPA Contract 68-03-2924, April 1982.

5. ASARCO, Response to EPA Section 114 letter, January 11, 1982.

6. Mathews, J. C., F. L. Belligia, C. H. Gooding, and G. E. Weant, "SO_2 Control Processes for Nonferrous Smelters," EPA-600/2-76-008, January 1976.

7. Williamson, P. C., and Puschaver, E.J., "Ammonia Absorption/ Ammonium Sulfate Regeneration Pilot Plant for Flue Gas Desulfurization," Tennessee Valley Authority, Muscle Shoals, Alabama, Bulletin Y-116, August 1977.

8. McIlvaine Co., Inc., "The McIlvaine Scrubber Manual," The McIlvaine Company, Northbrook, Illinois, 1974, Ch. IX, Section 4911-900, p. 176.

9. Telecon, Clark, T. C., Research Triangle Institute, with Hoffman, D., Union Carbide Corporation. April 26, 1982. Reverberatory Furnace Oxy-Fuel Burner Costs.

10. Telecon, Clark, T. C., Research Triangle Institute, with Zullo, A., Hauck Manufacturing Company, April 23, 1982. Reverberatory Furnace Burner Systems Costs.

11. Neveril, R. B., "Capital and Operating Costs of Selected Air Pollution Control Systems," EPA-450/5-80-002, December 1978.

12. Telecon, Clark, T. C., Research Triangle Institute, with H. C. Garven, Inco, July 6, 1982.

13. Anderson, K. D. et al., "Definitive SO_x Control Process Evaluations: Limestone, Lime, and Magnesia FGD Processes," TVA ECDP B-7, January 1980.

14. Biswas, A. K., and W. G. Davenport, "Extractive Metallurgy of Copper," 2nd edition, New York, Pergammon Press, 1980.

15. Kerry, F. G., "Technical and Economic Considerations of Very Large Oxygen Plants, TMS/AIME, paper A75-61.

16. Viner, A. S. and D. S. Ensor, "Computer Programs for Estimating the Cost of Particulate Control Equipment," prepared for U.S. Environmental Protection Agency, Research Triangle Park, North Carolina, August 1981.

17. Viner, A. S. and D. S. Ensor, "Computer Programs for Estimating the Cost of Particulate Control Equipment," prepared by the Research Triangle Institute for EPA-IERL, Research Triangle Park, N.C., August 1981.

18. U.S. Environmental Protection Agency, "Arsenic Emissions from Primary Copper Smelters--Background Information for Proposed Standards--Preliminary Draft," February 1981.

19. ASARCO Design Report: Converter and Secondary Hooding for the Tacoma Plant, A. O. March, Jr., Central Engineering Report (Salt Lake City), January 22, 1981.

20. Strauss, W., "Air Pollution Control, Part I," Wiley-Interscience, New York, 1971, p. 253.

21. Campbell, K. S., et al., "Economic Evaluation of Fabric Filtration Versus Electrostatic Precipitation for Ultrahigh Particle Efficiency," Electric Power Research Institute Report FP-775, June 1978, p. III-18.

22. Securities and Exchange Commission, Washington, D.C., Form 10-K for Phelps Dodge Corporation for the years 1974-1976.

23. Harkki, S., Outokumpu, letter to T. C. Clark, Research Triangle Institute, April 22, 1981.

24. Telecon, Clark, T. C., Research Triangle Institute, with ASARCO-Hayden, October 13, 1981.

25. Antonioni, T. N. et al. Inco Oxygen Flash Smelting of Copper Concentrates. Inco Metals Company, Toronto, Ontario (Presented at the British Columbia Copper Smelting and Refining Technologies Seminar, Vancouver, November 5, 1980), 40 pp.

26. Perry, R. H., and C. H. Chilton, editors, Chemical Engineering Handbook, 5th Edition, McGraw Hill, New York, 1973, p. 25-16.

9.0 ECONOMIC IMPACT

This chapter describes the primary copper industry (Section 9.1) using data that are subsequently used in an economic impact analysis of the industry (Sections 9.2 and 9.3).

The environmental impacts of the primary copper industry have been the subject of considerable study recently. This report uses findings from these studies and others as appropriate. New or additional material not reported elsewhere is also included, such as the copper flows from each mine to each smelter and various production cost estimates.

The economic profile focuses on several primary copper industry characteristics: number and location of smelters and refiners, copper supplies, prices and costs, value of shipments, competition, growth, and employment. The majority of data available for developing the industry profile are from the years 1979 and 1980.

9.1 INDUSTRY ECONOMIC PROFILE

9.1.1 Introduction

Copper's utility stems from its qualities of electrical and thermal conductivity, durability, corrosion resistance, low melting point, strength, malleability, and ductility. Principal uses are in transportation, machinery, electronics, and construction.

The Standard Industrial Classification (SIC) Code definition of the primary copper industry is the processes of mining, milling, smelting, and refining copper. Total 1980 employment, according to Bureau of Labor Statistics figures, averaged 29,400 workers. Copper-bearing ore deposits and substantial amounts of copper scrap provide the raw materials for these processes.

In addition to producing copper, the industry markets by-product minerals and metals that are extracted from the ore deposits, such as silver, gold, zinc, lead, molybdenum, selenium, arsenic, cadmium, titanium, and tellurium. Many of the companies that own primary copper facilities also fabricate copper. Many of these same companies are also highly diversified and produce other metals, minerals, and fuels.

The standard under consideration directly affects only one of the four primary copper processes--smelting. However, the other three related processes are an integral part of the ownership and economic structures of copper smelters and therefore must be examined in determining industry impact. Mining and milling processes supplying a smelter will be impacted secondarily by a smelter impact because transportation costs to an alternate smelter will add a sizable business cost. Transportation costs for concentrate are significant because only 25 to 35 percent of the concentrate is copper and the remaining 75 to 65 percent of the material being transported is waste material. The same interdependence between smelter and refiner is not as critical since the copper content at this stage is typically 98 percent.

Even if there were no business dependencies among the processes, the available financial data for smelters are aggregated in consolidated financial statements, which makes smelter data difficult to isolate. Thus, an impact analysis on copper smelters must address the economic connection backward to the mines and forward through the refining stage.

9.1.2 The Copper Smelters--Ownership, Location, Concentration

There are 15 pyrometallurgical copper smelters in the United States as shown in Figure 9-1. Copper is also produced in limited amounts by various hydrometallurgical methods which by-pass the smelting stage. These hydrometallurgical facilities are not being considered in the standard-setting process. In 1980 the 15 copper smelters had a production capacity* of 1,693,000 Mg† of copper. The hydrometallurgical

---

*Capacity is not a static measure of a smelter since capacity can vary; for example, according to the grade of copper concentrates processed.

†1 Mg = 1.1 short tons.

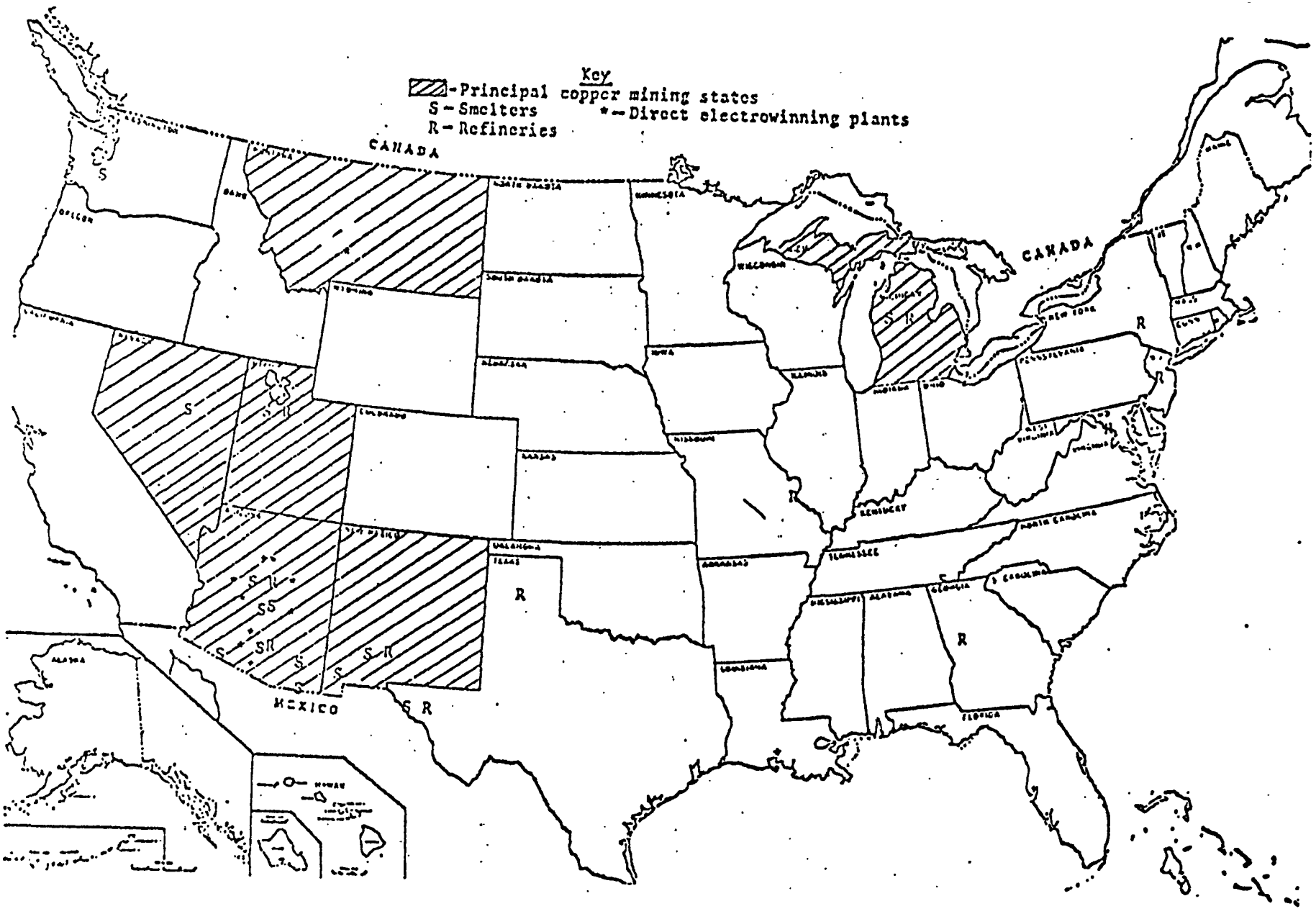

Figure 9-1. Principal mining States and copper smelting and refining plants, 1978.[1]

processes in 1979 had a capacity of 189,000 Mg of copper or 10.1 percent of the copper smelters' capacity. According to the Copper Development Association, Inc. (CDA), actual smelter production in 1979 was 1,395,600 Mg and the Bureau of Mines estimated the hydrometallurgical production at 98,800 Mg.

The 15 U.S. copper smelters are owned by seven companies. Although this is a small number of companies, the industry is somewhat less concentrated than in the early 1950's when Kennecott, Phelps Dodge, Anaconda, and ASARCO dominated the industry share. All seven companies are integrated in that they own some mining and milling facilities that produce copper concentrates for the smelters. On the other hand, several smelters buy concentrates from other mining and milling producers, smelt and refine the copper, and then sell it. This practice is referred to as custom smelting. Other smelters process (smelt and refine) the concentrates and return the blister copper to mine owners for them to sell, a practice referred to as tolling. Some smelters perform both toll and custom smelting. It is important, in determining the smelter's ability to absorb or to "pass back" potential pollution control costs, to know whether the concentrates came from the smelter-owned mines or from other sources on a tolling or custom basis.

It is general industry practice for companies to operate their smelters as service centers at low profit margins to the owned mines. This acts to shift profits of an integrated operation to the mines where depletion allowances exist, thus maximizing profit to the overall operation. An implication of this policy is that the impact on profits from swings in copper prices frequently is manifested at the mines more than at the smelters.

Table 9-1 lists the smelters, their corporate owners, capacities, 1979 and 1980 production amounts, and the distribution of integrated, custom, and toll smelting. The total production figures and the corresponding operating rates are shown in Table 9-1 for 1979, one compiled from corporate reports and one reported by the Copper Development Association, Inc. For 1979, the table shows an 83-percent operating rate for corporate-reported amounts and a 74.7-percent rate

TABLE 9-1. SMELTER OWNERSHIP, PRODUCTION, AND SOURCE MATERIAL ARRANGEMENTS

Smelter name and location	Ownership	1978 rated[a] capacity (Mg)	1979 Production (Mg)	1980 Production (Mg)	Material arrangements (%)[b]		1976	1979	1980
Anaconda, MT	ARCO	180,000	138,000[c]	[d]	Integrated primarily	-	74	-	[d]
					Custom[e]	-	26	-	-
Tacoma, WA	ASARCO, Inc.	91,000	61,000[f]	42,700[f]	Integrated	-	31	31	20
Hayden, AZ		182,000	96,000	59,000	Custom	-	21	25	44
El Paso, TX		91,000	85,000	47,300	Toll	-	48	44	36
Copperhill, TN	Cities Service Co.	13,600	12,900[g]	10,000[g]	Integrated[h]	-	100	100	100
White Pine, MI	Copper Range Co. Subsidiary of the Louisiana Land Exploration Co.	52,000	39,770[i]	32,500[i]	Integrated	-	100	100	100
Miami, AZ	Inspiration Consolidated Copper Company	136,000	124,070[j]	107,400[j]	Integrated	-	35	35	58
					Toll	-	65	65	42
McGill, NV	Kennecott Corp.	45,000			Integrated	-	100	100	90
Garfield, UT		254,000	296,000[k]	259,300[k]					
Hayden, AZ		71,000							
Hurley, NM		73,000[l]	56,360	46,100	Toll	-			10
Magma (San Manuel, AZ)	Newmont Mining	181,000	145,900[m]	98,000[m]	Integrated	-	81	100	100
					Toll	-	19		
Douglas, AZ	Phelps Dodge Corp.	115,000			Integrated	-	79	-	75
Ajo, AZ		64,000	283,000[n]	324,100[n]	Custom	-	5	-	
Morenci, AZ		191,000			Toll	-	16	-	25
Hidalgo, NM		163,000	91,000						
Total production (operating rate)		1,722,600[o]	1,429,000 (83.0%)	1,026,420 (59.6%)	Integrated	-	72		73
					Custom	-	8		6
CDA production (operating rate)		1,693,000[o]	1,399,100 (74.7%)		Toll	-	20		21

[a]Source: 114 letter responses (see Table 3-1).

[b]Information primarily from corporate 10-K reports to the Securities and Exchange Commission.

[c]Reference 2.

[d]Anaconda smelter closed in 1980.

[e]Estimate based on U.S. Bureau of Census data and Bureau of Mines data, which show concentrates coming from Canada and going to Anaconda but very little refined copper going back to Canada.

[f]Reference 3.

[g]Reference 4.

[h]Estimate based on total copper sales for Cities Service minus the sales of its Arizona mines.

[i]Reference 5.

[j]Reference 6.

[k]Reference 7.

[l]Estimated to expand to 110,000 tons.

[m]Reference 8.

[n]Reference 9.

[o]Rated capacity excluding Anaconda.

based on CDA figures. CDA figures will be used throughout the report for comparison to historical data. The total production figure for 1980 was compiled from corporate annual reports. For 1980, the table shows that the industry operated at 59.6 percent of capacity. Production was down for 1980 due to an industry strike.

Data in Table 9-1 indicate that the vast majority (approximately 89 percent) of smelting capacity is in Utah, Nevada, New Mexico, Arizona, and Texas, near copper mines. The location is largely dictated by the need to minimize shipping distances of concentrates, which are normally 25 to 35 percent copper.

The three largest companies account for 68 percent of the entire smelting capacity (1,273/1,873 = 68, prior to Anaconda closure), 69 percent of 1979 production, and 76 percent of 1980 production. Kennecott Corporation has the largest smelting capacity, followed by Phelps Dodge and then ASARCO. The remaining four companies each have one smelter and in order of size are Magma (Newmont), Inspiration, Copper Range, and Copperhill (Cities Service).

The table also shows that 72 percent of total 1976 smelter production was from concentrate outputs from integrated arrangements. Of the remaining concentrate, 20 percent was smelted on a toll basis and 8 percent smelted on a custom basis. Three of the eight companies process only their own copper concentrates.

The 1979 smelter production rate was 1,399,100 Mg of copper, down 15.6 percent from the 1973 high of 1,656,200 Mg. From 1975 through 1979, the average annual production was 1,379,100 Mg; the average for the previous 5 years was 1,548,200 Mg, a decrease in average annual production for the two periods of 12.2 percent.

In 1979, 60,400 Mg of copper scrap were resmelted by primary copper smelters, amounting to 4.3 percent of total smelter production. The average percent for the years 1975 to 1979 was 3.6 percent and for the previous 5 years it was 4.4 percent.[10] Although it appears that the percentage trend in scrap use at the smelting stage is decreasing, in recent years it has returned to previous levels.

Foreign input of ore to U.S. smelters in 1979 was 1.6 percent of smelter output. The 1975 to 1979 average was 3 percent; for the 5 previous years the percentage was 2.1 percent.[11]

9.1.3 The Copper Refiners

Following the smelting stage, the 98-percent-pure copper resulting from the smelting operation is refined by either electrolytic or firing processes to a product of greater than 99 percent purity. Historically, refiners were much closer to the market than were smelters. New Jersey and New York once had extensive refining facilities. Today refiners are found throughout the country as can be seen from Table 9-2.

Table 9-2 lists the refiners, their 1978 production capacities, and 1978, 1979, and 1980 production of refined copper. Additional scrap and blister and refined imports are important sources of total refined copper supply. In 1979, scrap comprised 11.7 percent of refinery output (excluding scrap that went directly to the smelter). Scrap contributions to refined output in the 1975 to 1979 period are approximately 0.6 percent less than the average of the previous 5 years.[18]

In recent years, the contribution of refined imports to the total supply of copper has increased. Imports of blister and refined copper during 1979 totaled 273,700 Mg or 12.2 percent of refined copper consumed. The average percentage for the 1975 to 1979 period was 17.9 percent and for the previous 5 years the percentage was 17.3.[11] There has been a significant change in the amount of imports of refined copper as compared to blister. For the 1970 to 1974 period, refined imports accounted for only 56.6 percent of the total blister and refined imports, whereas in the 1975 to 1979 period, refined imports increased to 82.4 percent of the total blister and refined imports.[19] This trend toward importing copper in a more processed form means that there is less demand for work at domestic facilities. The U.S. Copper Industry is concerned about the considerable increase in the net imports of fabricated copper.

TABLE 9-2. U.S REFINING FACILITIES FOR PRIMARY COPPER[a]
(megagrams)

Name and location	1978 Capacity[b]	1978 Production	1979 Production	1980 Production
Amax-Carteret, NJ	236,000	180,325[c,d]	171,436[c,e]	116,310[c,e]
Anaconda-Great Falls, MT[f]	228,000	129,831[g]	138,293[g]	
ASARCO-Tacoma, WA[h]	142,000	58,000	1,000	
ASARCO-Amarillo, TX	382,000	246,000	300,000	204,000
Kennecott-Magna, UT	169,000	154,625	187,210	181,900
Kennecott-Anne Arundel City, MD	251,000	80,534	108,950	77,400
Kennecott-Hurley, NM	94,000[i]	54,138	56,362	46,100
Phelps Dodge-El Paso, TX	382,000[i] 23,000[i]	461,727[j]	490,000[j] (84% capacity)	421,800[j]
Phelps Dodge-Laurel Hill, NY	65,000 18,000			
Magma-San Manuel, AZ	182,000	146,000[k]	145,900[k]	98,000[k]
Copper Range-White Pine, MI[m]	82,000[i]	36,950[l]	39,770[l]	32,520[l]
Inspiration-Inspiration, AZ	64,000	35,617[n]	43,161[n]	62,850[n]
Southwire-Carrollton, GA	65,000	22,000[o]	12,900[o]	10,000[o]
Total	2,383,000	1,606,147	1,694,982	1,250,880
Copper Development Association Total		1,910,400	2,064,600	

[a]A few refineries exist that process only secondary, or scrap, materials.

[b]Reference 12.

[c]Includes copper from primary and secondary smelting facilities.

[d]Reference 13.

[e]Reference 14.

[f]Anaconda refinery closed in 1980.

[g]Reference 15.

[h]ASARCO-Tacoma refinery closed in 1980.

[i]Lake or fire refining, otherwise all other facilities electrorefining.

[j]Reference 16.

[k]Reference 17.

[l]Reference 5.

[m]In 1980 Copper Range announced plans to build a 54,500-Mg capacity electrolytic refinery at White Pine, MI, to be completed in late 1982.

[n]Reference 6.

[o]Only that portion of total company's production which came from Copper-Hill, Tennessee, smelter facility.

The 1979 value of shipments from refiners was $5.7 billion. This is an increase over the 1976 level, which was $3.4 billion.

9.1.4 Domestic Supply

The refined copper output described above does not depict the entire supply of copper that is consumed in the United States. A large portion of copper scrap does not need to be resmelted or re-refined and is readily available for consumption. Copper is a durable material and if it is unalloyed or unpainted it can be reused readily. Otherwise it is resmelted or re-refined as described earlier. The ready availability of scrap as a secondary source of copper tends to be a stabilizing influence on producers' copper prices.

Total copper consumption in any one year is therefore comprised of refined U.S. production, scrap not re-refined, net imports, and any changes in inventory of primary refined production from one year to the next. The sources and uses of copper are shown in Figure 9-2.

The refined copper production in 1979 comprised 62.7 percent of total copper consumed in the United States; scrap not re-refined accounted for 31.0 percent and net refined imports 6.8 percent.[19] Between 1969 and 1978, 67 percent of U.S. copper demand, excluding stock changes, was met from domestic mine production; 21 percent was from old scrap; and 12 percent from net imports. During these years, total U.S. demand for copper averaged 2,012,000 Mg/yr. Of this amount, 1,337,000 Mg was from domestic production, 427,000 Mg from scrap, and 248,000 Mg from net imports.

Another method of describing the importance of scrap is to total the three stages (smelting, refining from scrap, and reuse of scrap) at which scrap can enter the production process and to compare the figures to total copper consumption. In 1979 the percentage of total consumed copper from scrap was 48.1, slightly higher than in more recent years.

The 1979 refined copper production level was 2,064,600 Mg. However, there is a slight increasing trend in refined production; production has increased at a 1.1-percent annual rate for the last 5 years compared to the previous 5, which showed a decline of 1.0 percent annually.

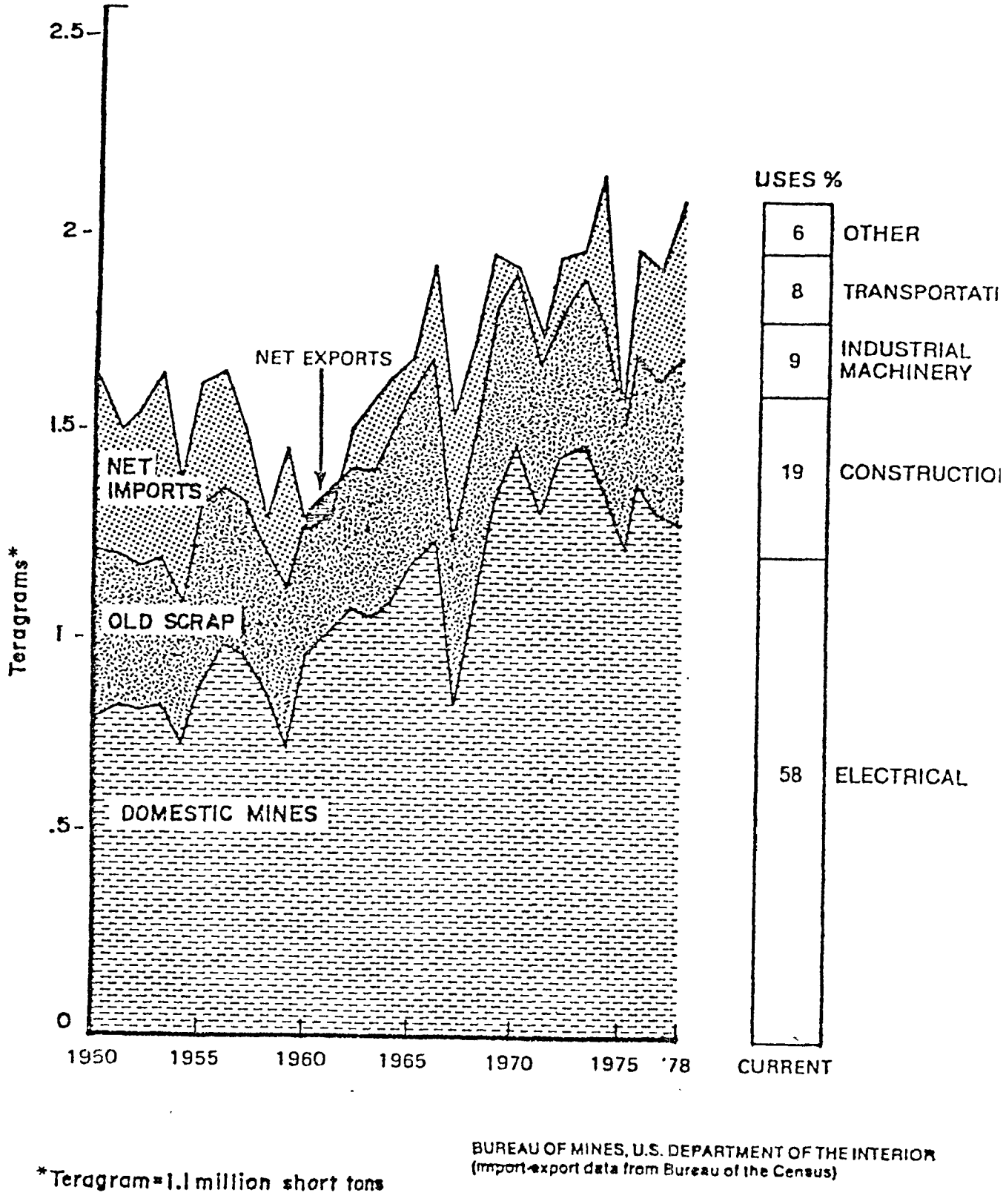

Figure 9-2. U.S. sources and uses of copper.[20 21]

9.1.5 Flow of Copper from Mines to U.S. Smelters

In subsequent analyses of how copper smelters are likely to handle control costs, it is important to know the sources of copper concentrates. Passing the cost of controls back to the mines and mills is one option that will be considered. It is currently a more likely option than passing the cost forward to the consumers, given the competition from substitute products and imports and depressed demand. Another option to be considered is absorption of control costs by the smelters.

Tables 9-3 and 9-4 identify the estimated flows of copper from the 35 domestic copper mines to the 16 domestic smelters in existence in 1976 (before the Anaconda closure). The construction of such a table involves considerable investigation and requires making many assumptions since many companies do not normally reveal such information in their corporate 10-K or annual reports. The tables are for a specific year--1976. Some relationships can change from year to year, especially for toll and custom smelting; however, although the figures are estimates for a single year, they should provide a reasonable indication of the flows within the industry.

Considerable information was obtained from corporate annual reports and 10-K reports to the Securities and Exchange Commission. Information also was obtained from the American Bureau of Metal Statistics and from discussions with industry analysts and trade publications. Import and export figures for ore and concentrates were also obtained for reconciliation with national production figures and as inputs or outputs to specific mines or smelters. Mine output going to hydrometallurgical facilities and not to smelters was also identified in the figures. There are limits to this type of analysis: the effects of changes in mine and smelter inventory are not always apparent, and information on intracompany flows often must be estimated. For example, Duval reports exactly what percentage of total mine output goes to ASARCO but not to which one of ASARCO's three smelters.

As an overall description, brief summaries of the sources of copper are provided for each of the eight smelting companies. During

TABLE 9-3. FLOW OF COPPER FROM MINES TO U.S. SMELTERS, MINE OUTPUT
(1976, gigagrams[a] of copper)

Mines			Smelter destinations			Other destinations		
Parent company, mine identifying no., mine location	1976 Capacity	1976 Production	Identifying letter[b]	Gg	Source	Identifying code	Gg	Source
Phelps-Dodge								
1 Bisbee, AZ	5	4	A	4	c	-	-	-
2 Metcalf, AZ	55	72	C	72	d	-	-	-
3 Morenci, AZ	109	95	C	95	d	-	-	-
4 Ajo, AZ	45	45	B	45	d	-	-	-
5 Tyrone, NM	86	84	A	33	d	-	-	-
			D	35	d	-	-	-
			B	16	c,d	-	-	-
Newmont								
6 San Manuel, AZ	132	99	I	99	e	-	-	-
7 Superior, AZ	36	36	I	36	e	-	-	-
Kennecott								
8 Ray, AZ	86	80	G	57	f	HM	23	f
9 Chino, NM	54	52	H	52	f	-	-	-
10 Utah	205	172	F	172	f	-	-	-
11 Nevada	36	11	E	11	f	-	-	-
Anaconda								
12 Berkeley, MT	91	74	J	67	g	HM	6	h
13 Yerington, NV	32	26	J	26	g	-	-	-
14 Victoria, NV	9	5	J	5	g	-	-	-
Inspiration								
15 Inspiration, AZ	50	34	K	34	i	-	-	-
16 Ox Hide, AZ	5	4	-	-	-	HM	4	i
17 Christmas, AZ	9	6	K	6	i	-	-	-
Cyprus								
18 Pima, AZ	73	55	A	42	g,j,k	-	-	-
			I	14	g,k	-	-	-
19 Bagdad, AZ	11	16	A	10	g,k	HM	6	k
20 Johnson, AZ	5	5	-	-	-	HM	5	k
21 Bruce, AZ	3	3	A	3	g,k	-	-	-
ASARCO								
22 San Xavier, AZ	10	10	O	4	c,l	-	-	-
			N	6	c,l	-	-	-
23 Mission, AZ	41	32	N	32	c,l	-	-	-
24 Silver Bell, AZ	23	20	N	16	c,l	-	-	-
			O	4	c,l	-	-	-
25 Sacaton, AZ	20	20	N	20	c,l	-	-	-
Cities Service								
26 Pinto Valley, AZ	59	65	K	63	g	HM	3	m
27 Copperhill, TN	18	16	P	16	m	-	-	-
Anamax								
28 Twin Buttes, AZ	109	87	N	8	n	HM	26	o
			K	13	n	-	-	-
			A	16	c	-	-	-
			I	9	c	-	-	-
			J	15	h	-	-	-
Copper Range								
29 White Pine, MI	68	42	L	42	p	-	-	-

See footnotes at end of table. (continued)

TABLE 9-3 (continued)

Mines			Smelter destinations			Other destinations		
Parent company, mine identifying no., mine location	1976 Capacity	1976 Production	Identifying letter[b]	Gg	Source	Identifying code	Gg	Source
Duval								
30 Battle Mtn., NV	14	14	M	14	q	-	-	-
31 Mineral Pk., AZ	18	14	M	7	q	-	-	-
			N	6	q	-	-	-
32 Esperanza, AZ	18	15	O	15	q	-	-	-
33 Sierrita, AZ	91	89	M	26	q	HM	15	r
			O	34	q	INV	5	r
			I	8	c	-	-	-
UV Industries								
34 New Mexico	23	21	J	9	c,s	-	-	-
			O	12	c,s	-	-	-
Hecla-El Paso								
35 Lakeshore, AZ	50	13	N	4	c,t	HM	9	t
Subtotals	1,700	1,436		1,333			HM=102	
Imports (IMP)				65				
Total to Smelters				1,398				

[a]HM = Hydrometallurgy.
INV = Inventory.
1 gigagram = 1.1 thousands short tons.

[b]See first column of Table 9-4.

[c]Estimate of destination and/or production split and/or amounts.

[d]Reference 22.

[e]Reference 23.

[f]Reference 24.

[g]Reference 25.

[h]Estimate based on 1976 Official Statement of Anaconda $31.9 million Pollution Control Revenue Bond.

[i]Reference 26.

[j]Reference 27.

[k]Reference 28.

[l]Reference 29.

[m]Reference 30.

[n]Assuming other mine inputs and total smelter productions are correct for smelters K and N, the amount to each of these smelters from this mine is estimated by difference.

[o]Output will go to Phelps-Dodge's Hidalgo smelter in the future.

[p]Reference 31.

[q]Based on ASARCO-supplied figures for 1971-1974.

[r]16 percent of production stayed within the company, 5 percent to inventory, and 11 percent to new CLEAR process.

[s]Reference 32.

[t]Information from company 10-K report.

TABLE 9-4. FLOW OF COPPER FROM MINES TO U.S. SMELTERS, SMELTER SOURCES (1976, gigagrams)

Smelters		Copper sources			
Parent company, smelter identifying letter, mine location	1976 Capacity	1976 Production	Identifying number[a]	Gg	Source
Phelps-Dodge					
A Douglas, AZ	115	115	SCR	8	b
			1	4	b
			18	42	c,d
			19	10	c,e
			21	3	c
			28	16	b
			5	33	b,f
B Ajo, AZ	64	62	4	45	f
			3	16	b
C Morenci, AZ	161	167	3	95	f
			2	72	f
D Hidalgo, NM	91	35	5	35	f
Kennecott					
E McGill, NV	45	11	11	11	g
F Garfield, UT	254	172	10	172	g
G Hayden, AZ	73	57	8	57	g
H Hurley, NH	73	52	9	52	g
Newmont					
I San Manuel, AZ	182	166	28	9	b
			6	99	h
			7	36	h
			33	8	b
			18	14	c
Anaconda					
J Anaconda, MT	180	165	IMP	43	i
			12	67	c
			13	26	c
			14	5	c
			28	15	b,j
			34	9	b,j
Inspiration					
K Miami, AZ	136	115	15	34	k
			17	6	k
			26	63	c,k
			28	13	k,l
Copper Range					
L White Pine, MI	82	42	29	42	m
ASARCO					
M Tacoma, WA	91	75	SCR	6	n
			IMP	22	i
			30	14	o
			31	7	o
			33	26	o

(continued)

TABLE 9-4 (continued)

Smelters			Copper sources		
Parent company, smelter identifying letter, mine location	1976 Capacity	1976 Production	Identifying number[a]	Gg	Source
N Hayden, AZ	164	93	22	6	b,p
			23	32	b,p
			24	16	b,p
			25	20	b,p
			28	8	l
			31	6	o
			35	4	b,p
O El Paso, TX	105	75	22	4	b,p
			24	4	b,p
			32	15	o
			33	35	o
			34	12	b,p
			SCR	7	n
Cities Service					
P Copperhill, TN	20	16	27	16	q
Total smelted	1,836	1,418			

SCR = Scrap.
IMP = Import.

[a]See first column of Table 9-3.

[b]Estimate of destination and/or production split and/or amounts.

[c]Reference 25.

[d]Reference 27.

[e]Output will go to Phelps-Dodge's Hidalgo smelter in the future.

[f]Reference 22.

[g]Reference 24.

[h]Reference 23.

[i]Bureau of Mines data.

[j]Information from company 10-K report.

[k]Reference 26.

[l]Assuming other mine inputs and total smelter productions are correct for smelters K and N, the amount to each of these smelters from this mine is estimated by difference.

[m]Reference 31.

[n]Estimate equal to same proportion as 1971-74 period for which ASARCO-supplied data available.

[o]Based on ASARCO-supplied figures for 1971-1974.

[p]Reference 29.

[q]Reference 30.

1976, Anaconda's Montana smelter received most of its copper concentrates from its own mines in Nevada and Montana, but it also received large imports from Canada according to Bureau of Mines figures. Anaconda also may have received small amounts of copper concentrates from UV Industries of New Mexico in 1976.

During 1976 (and in previous years), ASARCO was the largest toll and custom smelting company. Thirty-one percent of ASARCO's blister copper output was from its own mines; forty-eight percent was toll smelted; and twenty-one percent custom smelted. Duval Corporation is the largest supplier of concentrates to ASARCO. The Duval mines sent 77 percent of their 1976 output to ASARCO's smelters. ASARCO also received imports at its Tacoma smelter; the amount was a significant portion (approximately 30 percent) of its input.

During 1976 the Copper Range Company's White Pine smelter received input from its own mines in Michigan.

The Copperhill, TN, smelter of the Cities Service Company received its concentrates from its own nearby mines during 1976. More recently, during May of 1981, Cities Service announced that it is "testing the market" for the possible sale of its copper operations.

The Inspiration, AZ, smelter, received an estimated 35 percent of its input from its own mines during 1976. Its largest external source of copper was Cities Services' Pinto Valley, AZ, mine. It is believed that Inspiration also received copper concentrates on a tolling basis from Anamax.

Kennecott Corporation obtained concentrates for its four smelters from its own mines during 1976. More recently, during December of 1980, Mitsubishi Corporation of Japan became a one-third partner with Kennecott at Kennecott's Chino operation.

The Magma (Newmont) smelter primarily received copper concentrates from its own mines during 1976, accounting for 80 percent of its input, while approximately 20 percent was received from Cyprus and others on a tolling basis.

Phelps-Dodge has three smelters that received copper concentrates from its own mines during 1976. The Douglas smelter was estimated to

have received over one-half of its copper input from external sources, primarily Cyprus. On a total company basis, Phelps-Dodge received 79 percent of its smelter input from its own mines.

It should be noted that the Anaconda smelter and refinery were closed in 1980. Anaconda copper concentrates are currently sent to Japan for smelting and refining. The Japanese consortium that treats the Anaconda concentrates has two options--to purchase the concentrates or to treat them under a tolling arrangement and return them to Anaconda. ASARCO closed its Tacoma, WA, copper refinery in late 1980. The company's Amarillo, TX, refinery currently is sufficient to handle ASARCO's smelter output.

9.1.6 Copper Production Costs

Copper production costs vary for a number of reasons including location and physical characteristics of ore deposits. However, the Bureau of Mines has estimated the costs for a representative large open pit copper operation. In terms of the price of copper, it is estimated that 30 percent is for mining; 20 percent is for ore beneficiation; and 20 percent is for freight, smelting, and refining. The balance of 30 percent is required for such items as discovery, development, taxes, marketing, and general overhead including profit. The copper industry is capital-intensive requiring over $7,000/Mg of new annual capacity for facilities from mining through refining. According to the Bureau of Mines, the cost for expanding an existing facility is $5,000/Mg of expanded annual capacity.[33]

One major reason for increasing production costs is the long-term declining yield of copper from copper ores. In the United States, the average yield has dropped from 8.2 kg of copper per megagram of ore in 1950 to 4.5 kg in 1977.[33] Currently, some of the copper deposits under development contain an average of only 3.6 kg of copper per megagram of ore with a cutoff grade of 1.8 kg.

Because of the low grade of copper ore, larger amounts of material must be mined and processed to produce a given quantity of metal. Moreover, the Bureau of Mines estimates that open pit mines, which account for about 82 percent of domestic output, have average ratios of overburden to ore of about 2.5 to 1.[33]

None of the annual reports or 10-K reports of the involved companies presents pricing or cost schedules for their smelting operations. Therefore it was necessary to go to indirect sources for estimates. Fortunately, several researchers have attempted cost estimates on an industry-wide basis, as shown in Figure 9-3 and Table 9-5.

The Bureau of Mines has provided one such estimate. The costs were estimated for a 100,000-ton/yr smelter (copper content) built in 1973. Such costs were updated by indices recently provided by the Bureau of Mines. The costs for October 1977 are 28.2¢/kg before sulfuric acid credits and 25.4¢/kg after such credits. Fixed costs are included in these estimates.[35]

Arthur D. Little also performed a similar estimate for EPA in 1974 for new conventional smelting facilities. The estimated total costs per kilogram were 38.6¢ for new green feed smelting after sulfuric acid credits and 40.8¢ for new calcine smelting. The portion of the above costs for pollution control amounted to 6.6¢/kg. Arthur D. Little also stated tht custom smelter charges at existing older facilities amounted to 19.8¢ to 24.3¢/kg (1974 prices).[36]

Another estimate comes from a copper industry analyst, George Cleaver of Merrill Lynch, Pierce, Fenner, and Smith, Inc., New York. Mr. Cleaver estimates smelting costs to the owner of copper concentrates at 30.9¢ to 33.1¢/kg, including freight. His estimate for smelting and refining, including freight was 55¢-66¢/kg in 1977.

National Economic Research Associates, Inc. (NERA), recently conducted a pollution control impact study for the copper industry. Their 1975 variable costs* for the entire production of refined copper including pollution control costs were $1.23/kg. Their fixed costs* were 47.4¢/kg. NERA did not break out smelting costs in these estimates.[38]

---

*Variable costs are those costs that change as the level of production changes. Fixed costs are those that do not change as the level of production changes.

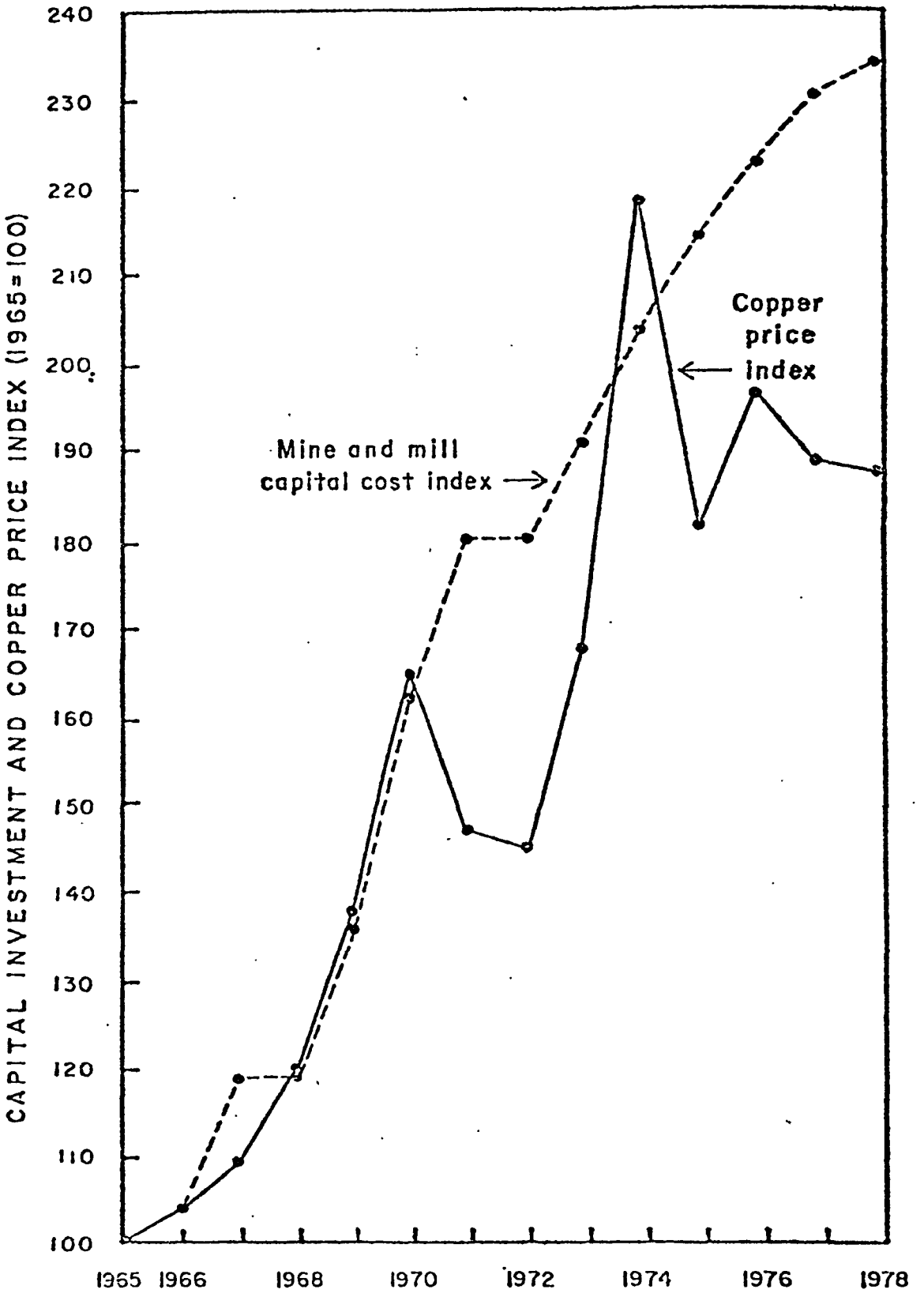

Figure 9-3. Comparison of copper price index and mine and mill capital cost index.[34]

TABLE 9-5. SMELTING COST ESTMATES[a]

Source	Cost ¢/kg Cu	Date	Includes transportation	Includes pollution control
New plant				
Bureau of Mines	25.4[b]	Oct. 1977	No	Partial[c]
Arthur D. Little				
Green feed	38.6[d]	1974	No	Yes
Calcine	40.8[d]	1974	No	Yes
Existing plant				
Arthur D. Little	20-24[e,f]	1974	No	Yes
Cleaver	31-33[e]	1977	Yes	Yes

[a]Does not include value of other metals recovered when present in concentrates or penalties for certain impurities or excess moisture in concentrates.

[b]Reference 35.

[c]Probably on low side since based on 1972 estimates of what State implementation plan (SIP) controls would be.

[d]Reference 36.

[e]Price figures that include cost and profit.

[f]Reference 37.

Arthur D. Little also estimated industry-wide production costs for refined copper of $1.59/kg consisting of 94.8¢ for variable costs and 63.9¢ for fixed costs.[39]

Although the above two studies were performed on an industry-wide basis, George Cleaver also estimated copper costs on a per-kilogram basis for each major mine through the refining stage (Table 9-6). The costs include the fixed and variable portion and include pollution control by-product value and ore for 1976. The range in cost is from $1.21 to $2.43/kg of refined copper with a median of $1.82.

In a more recent study, Leon Kovisars of MET Research estimates the production cost for 1979, also through the refining stage. He claims that two-thirds of the world copper produced in 1979 incurred cash costs between $0.77 and $1.96/kg, averaging $1.37/kg. Costs in North America (United States and Canada) are higher, with total cash costs averaging $1.50/kg. The total cash cost ranges from $1.94/kg to $1.06/kg for two-thirds of the North American producers. He also estimates that the average variable cash cost in North America is $1.01/kg and two-thirds of the production incurs cash cost between $1.39/kg and $0.64/kg.[41]

9.1.7 U.S. Copper Resources

Various estimates of U.S. copper resources (identified deposits that can be extracted profitably at a given price) show amounts ranging from 6.18 to 99.1 teragrams (Tg).*

One U.S. Bureau of Mines report showed resources of 104.7 Tg of copper in 1973 at a price of $1.65/kg.[42] Meanwhile, the Bureau of Mines Copper Commodity Profile, which reports resources on the basis of corporate reports, currently uses a figure of 84.5 Tg. This figure includes mines under operation and development as well as undeveloped deposits. Of the 84 Tg, 60 are under operation and development and are listed by company in Table 9-7 and updated to 91 Tg for 1979.

The lower figure of 60 Tg referenced above is from a 1973 Geological Survey paper. All figures are subject to change based on price changes in copper relative to general price changes.

---

*1 teragram = 1.1 million short tons.

TABLE 9-6. U.S. COPPER PRODUCTION BY MINE (1977), CENTS PER KILOGRAM AND PRODUCTION CAPACITY[40]

Company	Mine	Gg/yr capacity	¢/kg cost
Kennecott	Nevada	36	2.20-2.43
Amax-Anaconda	Twin Buttes sulphide	82	1.98-2.20
Kennecott	Ray	84	1.83-1.94
ASARCO	San Xavier	10	1.83-1.94
Hecla-El Paso	Lakeshore	50	1.76-1.87
La. Land (Copper Range)[a]	White Pine[a]	68	1.65-1.76
Cyprus Mine[b]	Bagdad[b]	64	1.65-1.76
	Pima	72	1.65-1.76
		(27%) 466	
Atlantic Rich. (Anaconda)	Berkeley	91	1.54-1.65
	Yerington	32	1.54-1.65
	Inspiration	50	1.54-1.65
	Christmas	5	1.54-1.65
Kennecott	Chino	55	1.54-1.65
Phelps Dodge	Metcalf	55	1.54-1.65
ASARCO	Mission	41	1.43-1.54
	Silver Bell	23	1.43-1 54
	Sacatoon	19	1.43 1 54
Atlantic Rich. (Anaconda)	Victoria	9	1.43-1 54
Cities Service	Pinto Valley	59	1.43-1.54
	Copperhill	18	1.43-1.54
Inspiration	Ox Hide	5	1.43-1.54
Phelps Dodge	Ajo	45	1.43-1.54
	Tyrone	84	1.43-1.54
		(34%) 591	
Cyprus Mines	Johnson	5	1.32-1 43
Duval	Mineral Park	18	1.32-1 43
	Esperanza[c]	18	1.32-1 43
	Battle Mountain	14	1.32-1.43
	Sierrita[d]	91	1.32-1.43
Kennecott	Utah	205	1.32-1.43
Newmont	Magma	164	1.32-1.43
UV Industries	New Mexico	23	1.32-1.43
		(31%) 538	
Phelps Dodge	Morenci	109	1.28-1.39
Amax-Anaconda[e]	Twin Buttes (leach)	27	1.21-1.32
Phelps Dodge	Bisbee (leach)	5	1.21-1.32
		(8%) 144	
		(100%) 1,739	

[a]This high cost mine has improved relative to others because it has had low pollution abatement costs.

[b]Includes expansion of 45,400 Mg/yr late 1977.

[c]Esperanza may have lower costs than Mineral Park and Battle Mountain.

[d]Copper is a coproduct with molybdenum.

[e]Excludes mining costs; ore has been stockpiled for years.

TABLE 9-7. COPPER RESOURCES OF U.S. COMPANIES[34]
(gigagrams)

Company	Resources 1976	Resources 1979
Anamax	2,848	4,329
ASARCO	1,904	3,146
ASARCO and Anamax (exclusive of the above)	648	894
Anaconda Company	3,685	-
Cities Service Company	1,763	2,659
Copper Range (Louisiana Land Exploration Co.)	6,880	4,694
Cyprus Mines Corporation (Standard Oil of Indiana)	2,460	1,674
Duval (Pennzoil)	1,834	1,555
Hecla Mining--El Paso Natural Gas[a]	3,181	-
Inspiration Consolidated Copper Co.	1,270	2,466
Kennecott Corporation	14,959	19,438
Magma (Newmont)	6,772	6,929
Phelps Dodge	10,906	13,594
Ranchers Exploration and Development Co.	340	289
UV Industries	481	492
Other	240	-
Total	60,171	91,165

[a]Property now owned by Noranda Mines, Ltd.

Copper resources that are as yet undiscovered are referred to as hypothetical or speculative. The Bureau of Mines estimates 290 Tg of such copper resources.

A discussion of the capability of these two sets of copper resources to meet future demand is dependent upon several factors. The Bureau of Mines estimates that copper demand will grow at an annual growth rate of 3.6 percent to the year 2000 and that 31 percent of the demand will be supplied by scrap. The likely primary copper demand over this period would be 57 Tg compared with 84 Tg of resources.[43] Therefore, U.S. supply appears adequate to the year 2000. Beyond the year 2000, demand is expected to strain supply sources. But, increased use of old scrap and possible exploitation of sea nodules can supplement onshore mining. In addition, microminiaturization, copper cladding, and other conservation methods will be used more widely to extend the supply of copper.

9.1.8 Smelter Capacity Growth

Smelter production in the United States reached its historical peak of 1,582.1 Gg in 1973. Figure 9-4 shows that since reaching that peak, production levels in the subsequent 8 years were considerably below the 1973 level and showed no signs of returning to the historical high. The lack of long-term growth in smelter production over recent years serves as a historical indicator to suggest that on this basis demand is not likely to grow over the next 6 or 7 years by an amount that would require new capacity.

Neglecting the low production due to the 1980 strike and the 1982 recession, the previous 5 typical years averaged 1,380 Gg/yr. Current capacity is 1,723 Gg. Possible shutdowns over the next 6 years amount to 224 Gg. This potential lost capacity will be countered partially by the announced expansion of 27 Gg at the Hurley smelter of Kennecott. The net effect of these changes on capacity would be a drop to 1,526 Gg by 1988. If production stays level, this represents a rise in utilization to a 90-percent rate.

Should there be an unexpected upward pressure on production, two corrective measures are available to ease a capacity shortage. First,

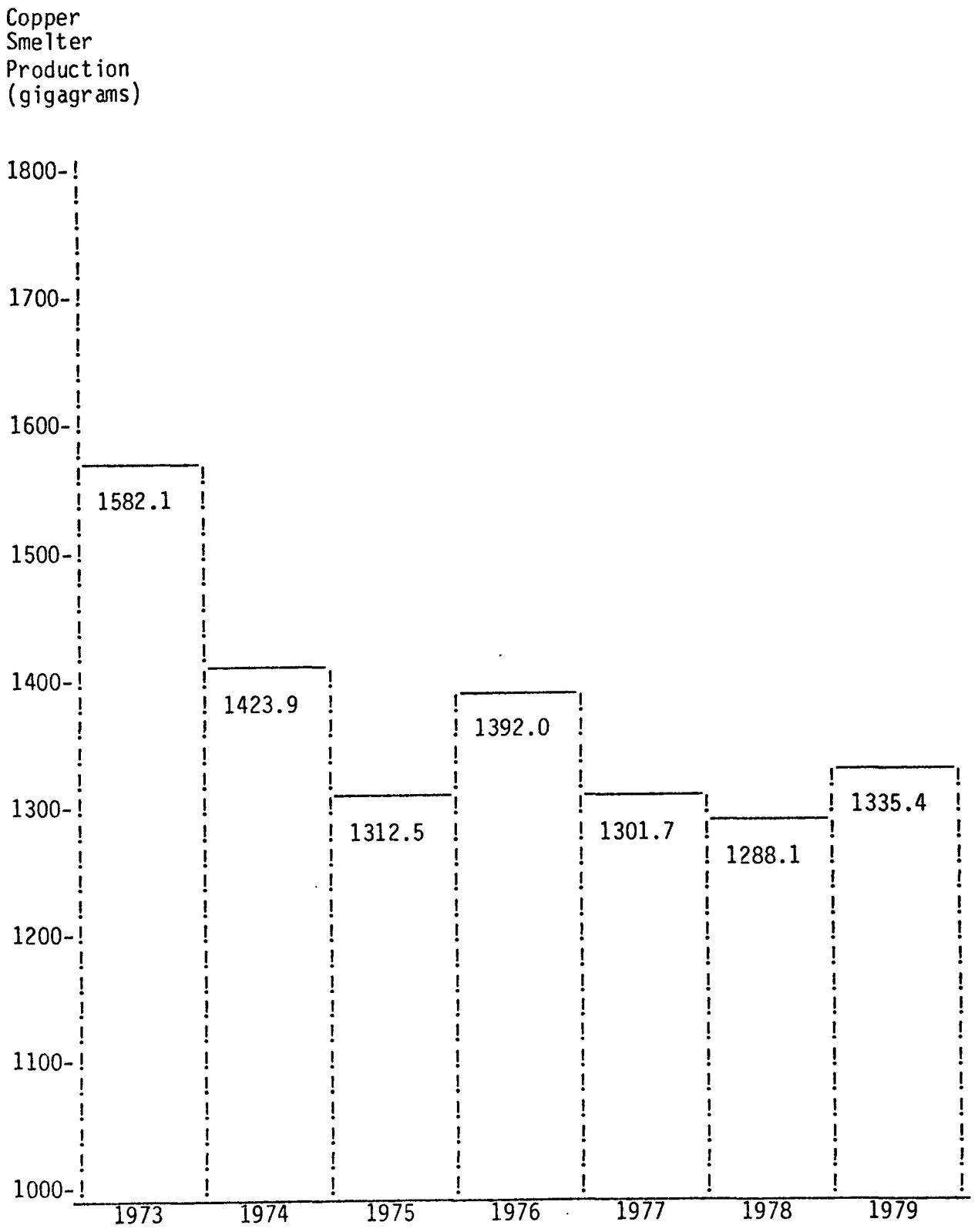

Figure 9-4. U.S. copper smelter production.[44]

many of the present smelters can be expanded 20 percent by increasing the use of oxygen enrichment. This has the potential of adding approximately 200 Gg of capacity. Second, the presumed shutdown of the McGill and Douglas smelters in 1988 may not occur. Also, the potential supply provided by imports is assumed not to increase.

It is therefore apparent that current smelter capacity will be adequate to meet demands over the next 6 to 7 years without the construction of facilities subject to a new source performance standard (NSPS).

Matters of utmost concern to the industry's smelter growth are air pollution regulations affecting the location of new smelting capacity. Any location for new sources will require stringent air pollution controls. Smelter growth in the past 15 years in the copper industry has occurred primarily by additions to existing facilities.

9.1.9 Trends in U.S. Productivity

The productivity movements from 1971 to 1977 are shown in Table 9-8, which was completed by the Bureau of Labor Statistics. The trend has been a modest improvement. It took 60.2 employee hours to produce a megagram of refined copper in 1977 and 67.6 hours in 1971. This amounts to a 1.9-percent per annum gain. However, this figure is below that for all U.S. industry.

Commodities Research Limited compiled a table (Table 9-9) of output and productivity indices to examine the trend more carefully. They feel it may be misleading to call this a trend because of the setback to productivity in the middle of the period.[45] Productivity decreased in 1973 as a result of a drop in the mining and milling sector. Productivity also fell in 1974 and 1975 as a result of decreases in both the mining and milling and the smelting and refining sectors. After the recovery in 1976, there was little net change in 1977 although a gain occurred in smelting and refining productivity and a setback occurred in mining and milling productivity. The gain in smelter productivity occurred despite their suffering from the impact of pollution controls that limited permissible throughput.

Table 9-8 shows that the number of employees and the total number of hours worked increased significantly in 1973. Despite this being

TABLE 9-8. PRODUCTIVITY IN THE COPPER INDUSTRY[45]

Year	Mine-mill: Production workers: Mine	Mine-mill: Production workers: Mill	Mine-mill: Office workers	Mine-mill: Total	Smelter-refinery: Production workers	Smelter-refinery: Total	Grand total
EMPLOYMENT (average number)							
1971	16,800	6,400	2,000	25,200	12,700	16,000	40,200
1972	16,500	6,300	2,200	25,000	14,200	17,600	42,600
1973	22,000	9,500	3,500	35,000	14,300	17,800	52,800
1974	23,400	9,700	3,200	36,300	14,300	18,100	54,400
1975	21,500	8,600	3,400	33,500	12,900	16,500	50,000
1976	18,700	8,200	2,800	29,700	11,400	14,600	44,300
1977	17,600	8,400	3,400	29,400	10,100	13,100	42,500
EMPLOYEE HOURS ('000)							
1971	41,300	16,600	4,600	62,500	28,133	35,443	97,943
1972	42,900	16,900	4,900	64,700	30,939	38,347	103,047
1973	46,800	18,400	6,700	71,900	31,529	39,245	111,145
1974	42,600	19,300	6,000	67,900	31,008	39,248	107,148
1975	40,900	15,200	5,900	62,000	27,100	34,663	96,663
1976	35,800	17,400	5,000	58,200	24,600	31,583	89,783
1977	33,200	15,700	6,000	54,900	22,741	29,496	84,396
PRODUCTIVITY (employee hours per metric ton of copper production)							
1971	-	-	-	45.3	-	22.4	67.6
1972	-	-	-	42.8	-	21.1	63.9
1973	-	-	-	46.1	-	21.1	67.2
1974	-	-	-	46.8	-	23.2	70.0
1975	-	-	-	48.3	-	23.8	72.1
1976	-	-	-	40.0	-	20.4	60.3
1977	-	-	-	40.2	-	20.0	60.2

TABLE 9-9. OUTPUT AND PRODUCTIVITY INDICES[45]

Year	Mine output	Productivity		
		Mine-mill	Smelter-refinery	Overall
1971	100.0	100.0	100.0	100.0
1972	109.4	105.3	105.4	105.4
1973	112.9	98.1	105.4	100.5
1974	103.0	96.6	96.1	96.4
1975	92.8	93.2	93.6	93.3
1976	105.5	116.7	108.9	110.7
1977	98.6	111.9	110.3	110.9

Productivity indices are derived from Table 8-14.

the peak production year (the industry turned out 1,559 Gg of primary refined copper), the rise in hours worked was more than the rise in output. In 1974 the labor force was still rising, output declined, and, despite a fall in hours worked, productivity dropped again. In 1976 the copper industry cut back a large amount of labor and reduced hours worked while increasing output. Commodities Research argues that the resulting sharp increase in productivity was probably due to the closure of labor-intensive capacity.

9.1.10 U.S. Total Consumption of Copper

Total copper consumed in the United States over the last 10 years has fluctuated considerably but shows overall a steady upward trend. This conclusion is derived from data of copper consumption from refineries and copper consumption from refineries plus scrap.

Table 9-10 shows each set of data for the year 1970 through 1980. The 5-year averages in gigagrams for copper consumption from refineries has declined (1970 through 1974 is 1,992.1 and 1975 through 1979 is 1,926.6.) However, copper consumption rose from 1975 to 1979 before declining in 1980.

Five-year scrap consumption showed a decline from 892.3 Gg for the 1970 to 1974 period to 838.0 Gg for the 1975 to 1980 period. There are signs that the consumption of scrap has begun to increase over the last 4 years.

The Bureau of Mines forecasts a long-range consumption growth rate to the year 2000 of 3.0 percent per year. Prior to the 10-year period analyzed above, copper consumption had increased steadily since the early 1950's.

9.1.11 Demand by End Use. Refined copper and copper scrap are further processed in a number of intermediate operations before the copper is consumed in a final product. Refined copper usually consists of one of the following shapes: cathodes, wire bars, ingots, ingot bars, cakes, slabs, and billets. These shapes, along with the copper scrap, then go to brass mills, wire mills, foundries, or powder plants for subsequent processing. The copper is frequently alloyed and transformed into other shapes such as sheet, tube, pipe, wire, powder,

TABLE 9-10. U.S. COPPER CONSUMPTION[46 47 48]
(gigagrams)

	1970	1971	1972	1973	1974	1975	1976	1977	1978	1979	1980
Consumption of refined copper	1,864.1	1,837.3	2,034.2	2,225.7	1,999.1	1,399.4	1,811.7	1,990.1	2,197.4	2,234.6	1,930.0
Consumption of scrap[a]	813.5	861.5	948.2	958.6	880.0	663.9	804.7	848.7	886.7	985.8	940.9
Total consumed copper	2,677.6	2,698.8	2,982.4	3,184.3	2,879.1	2,063.3	2,616.4	2,838.8	3,084.1	3,220.4	2,870.9
Percent of total as scrap	30.4	31.9	31.8	30.0	30.6	32.2	30.8	29.9	28.7	30.6	32.7
1970-1974 and 1975-1979 averages for consumption refined			1,992.1					1,926.6			
1970-1974 and 1975-1979 averages for consumption of scrap			892.3					838.0			
1970-1974 and 1975-1979 averages for total copper consumption			2,884.4					2,764.6			

[a]Without having to be refined again.

and cast shapes. Ultimately, the copper is consumed in such shapes in five market or end-use categories. The CDA uses the following categories: building construction, transportation, consumer and general products, industrial machinery and equipment, and electrical and electronic products.

Table 9-11 shows the demand for copper in each of these five markets over the 10-year period 1970 through 1979. The total figures for these five markets will not equal the total consumption figures of Section 9.1.9 since the United States is also a net importer of fully fabricated copper products.

A look at the 5-year average demand shows that there has been an increase in only two out of the five markets. The building industry market sales showed the most substantial gain of 21.8 percent. This is primarily due to the increase in residential sales. An increase of 10.5 percent also occurred in the electrical and electronic product markets. The demand for electrical equipment has risen because of increased emphasis on safety, comfort, recreation, and a pollution-free environment. Automation, including the use of computers has also boosted the use of copper.

Substitution of other materials has caused a sharp drop of 24 percent in the consumer and general products markets. The 16-percent decline in the industrial machinery and equipment market in the 1975 to 1979 period is largely due to the impact of the recession in 1975. Since 1975, this market has returned to a prerecessionary level. Declining car sales coupled with the decrease in copper content per automobile resulted in a 10.4-percent decrease in sales in the transportation sector.

The Bureau of Mines has established that the most growth in copper demand will occur in the electrical and electronic products industries, consumer and general products, and building construction.

Copper will be in high demand for electric vehicles. General Motors plans to produce an electric family car for mass marketing in the mid-1980's. In addition, Chrysler is developing a four-seat passenger car jointly with General Electric. A conventional internal

TABLE 9-11. U.S. COPPER DEMAND BY MARKET END USES[46, 49]
(gigagrams)

Market	1970	1971	1972	1973	1974	1975	1976	1977	1978	1979
Building construction	556	624	693	762	602	515	633	893	926	977
Transportation	284	318	379	418	356	260	379	409	438	397
Consumer and general products	586	575	652	694	607	512	572	382	442	455
Industrial machinery and equipment	504	493	568	606	530	349	415	461	481	560
Electrical and electronic products	693	710	748	868	764	500	610	667	746	811
Total	2,623	2,720	3,040	3,348	2,859	2,136	2,609	2,812	3,033	3,200
5-Year average demand										
Building construction			647					789.1		
Transportation			420					376.9		
Consumer and general products			623.2					473.0		
Industrial machinery and equipment			540					453.9		
Electrical and electronic products			604					667.3		

combustion automobile contains from 6.8 to 20.4 kg of refined copper; electric vehicles use much more. CDA estimates range from 45.4 to 90.7 kg, with an average nearer 45.5 kg.[50]

Another area for growth is the solar energy industry. Currently this sector consumes approximately 4,500 Mg/yr of copper in the United States. Representatives of the U.S. Solar Energy Industry estimate that the consumption could climb to 31,000 Mg/yr by 1985.

In addition, the U.S. military demand for copper is expected to increase. Increased military expenditures will have a significant impact on copper demand because copper is an important element in modern electronic weaponry. As seen in Table 9-12, during heavy rearmament periods, the U.S. military demand for the metal has reached 18 percent of copper mill shipments. Although military demand is not expected to return to the record high of 18 percent, analysts do expect a large increase in military requirements for copper from the low level in 1979 of less than 2 percent.[51]

The demand picture in the United States may also receive another boost in the near future from the Federal government. The Government is committed to acquiring, eventually, 1.1 Gg of copper for its currently depleted strategic stockpile. The previous stockpile was largely depleted in 1968; the final sale was in 1974 when copper prices had soared. Further Congressional action is necessary to implement and fund the purchase plan. Bills have been put forward to sell tin from the government stockpile to fund the copper purchases. After authorization by Congress the purchases may take 12 to 18 months to complete.

9.1.12 Copper Prices

Factors influencing the copper market and thus the price of refined copper include production costs, long-run return on investment, demand, scrap availability, imports, substitute materials, inventory levels, the difference between metal exchange prices and the refined price, and Federal Government actions (e.g., General Services Administration stockpiling and domestic price controls).

Among the many published copper price quotations, two key price levels are: (1) those quoted by the primary domestic copper producers

TABLE 9-12. U.S. SHIPMENTS OF COPPER-BASE MILL AND FOUNDRY PRODUCTS--GROSS WEIGHT[51]

Year	Total Gg	Military	
		Gg	Percent
1952	2,239	394	17.6
1953	2,294	345	15.0
1954	1,920	125	6.5
1955	2,331	75	3.2
1956	2,213	52	2.4
1957	2,012	47	2.4
1958	1,837	35	2.0
1959	2,146	33	1.5
1960	1,909	35	1.8
1961	1,996	42	2.1
1962	2,206	53	2.4
1963	2,309	63	2.7
1964	2,602	60	2.3
1965	2,775	63	2.3
1966	3,088	248	8.4
1967	2,639	263	10.0
1968	2,646	240	9.2
1969	2,975	251	8.5
1970	2,563	172	6.7
1971	2,638	96	3.6
1972	2,946	116	3.9
1973	3,267	84	2.6
1974	2,815	61	2.2
1975	2,107	48	2.3
1976	2,505	34	1.4
1977	2,728	33	1.2
1978	2,806	42	1.5
1979	2,868	40	1.4
1980	2,654	-	-

and (2) those on the London Metal Exchange and reported in Metals Week, Metal Bulletin, and the Engineering and Mining Journal. The producers' price listed most often is for refined copper wirebar f.o.b. refinery. The London Metal Exchange (LME) price is also for copper sold as wirebar. The LME generally is considered a marginal price reflective of short-term supply-demand conditions while the producer price is more long-term and stable and often lags the LME price movement.

Copper is also traded on the New York Commodity Exchange (Comex). Arbitrage keeps the LME price and the Comex price close together (with minor price differences due to different contract terms on the two exchanges and a transportation differential).

A significant departure from the two-price system and toward one world price occurred in mid-1978. At that time both Kennecott and Anaconda abandoned the system of quoting a fixed price for an indeterminate period and began simply charging 2.5¢/lb more than the closing futures price for the current month on the New York Commodity Exchange. In March 1982, Kennecott Corporation announced that, effective July 1, 1982, it would revert to quoting a fixed list price. Industry analysts believe that Kennecott's use of a Comex-based price means that it received less for copper than producers that used a firm list price.

Figure 9-5 is a plot of the quarterly movement of these two prices for the years 1973 through the first quarter of 1981. Data were obtained from monthly figures from two metals publications, which are identified in the figure. The next graph, Figure 9-6 shows the recent trends in more detail.

Three important points can be observed from the figure and from the recent industry pricing policy of some producers: (1) that the LME price has had wider swings than the producer price; (2) when both prices are relatively high, the LME price has been considerably higher than the producer price; during relatively low price periods, the producer price has been moderately higher than the LME price; and (3) marked change appears to be taking place away from a two-price system and toward a one-price system with the difference between the

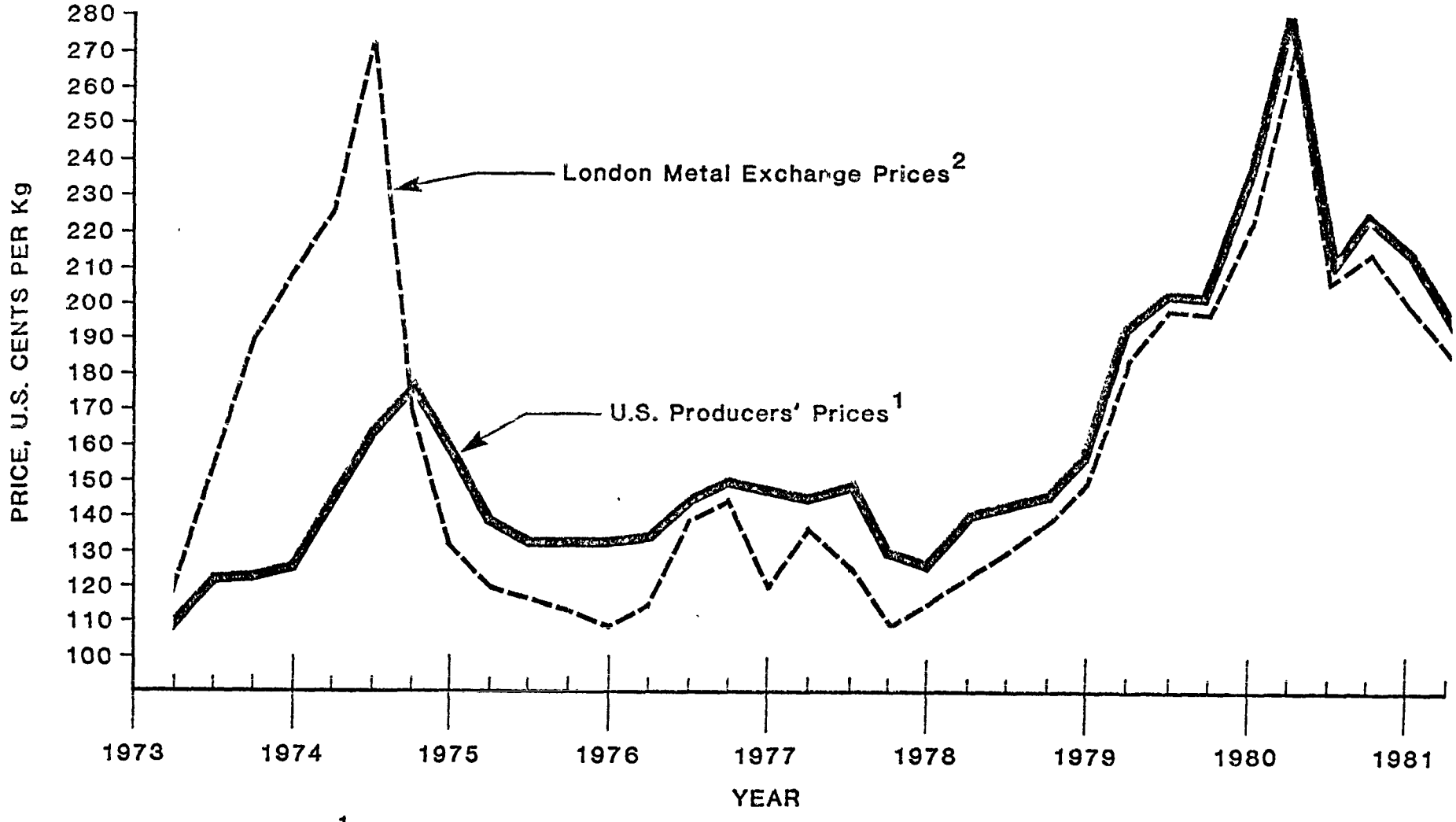

[1]Source: Metals Week
[2]Source: Metal Bulletin

Figure 9-5. Quarterly price movements for copper wirebars (1973 to 1981).[52]

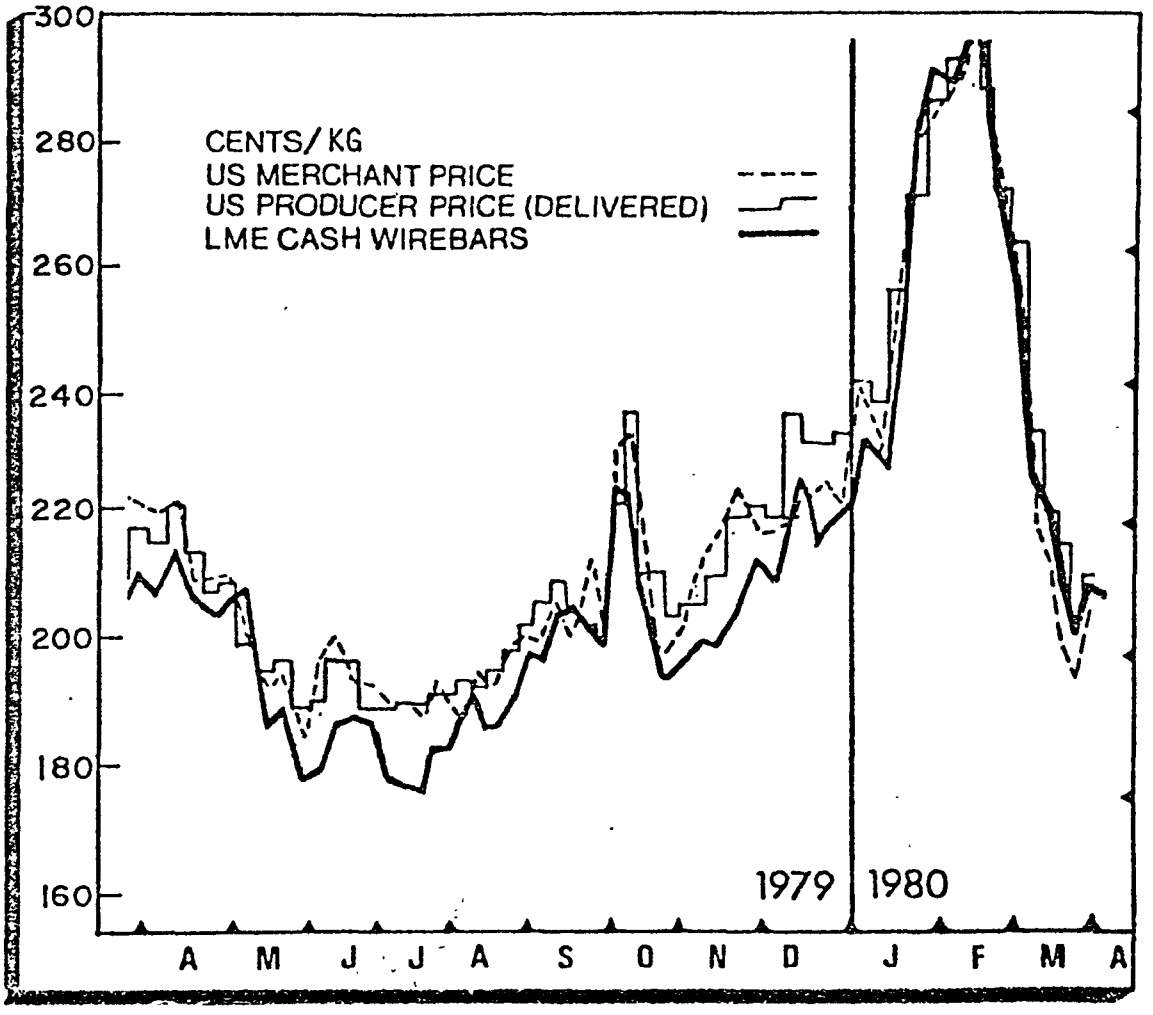

Figure 9-6. U.S. copper price.[53]

LME and the U.S. producer price accounted for only by a transportation differential. These earlier situations had occurred repeatedly over the past 20 years.

In theory, the U.S. producer price should be somewhat higher than the LME price since ocean transport costs (6.6¢ to 11¢/kg) must be incurred to get the refined copper to the United States. However, this relationship appears to hold only during slack price periods. When LME prices are high, the producers do not raise their prices as much, which in theory appears contrary to profit maximization.

There are two principal reasons for this trend. First, U.S. producers historically were concerned about the trend of substitution by aluminum, particularly in wire and cable markets, and attempted to maintain a U.S.-published producer quotation that was both reasonable and relatively stable in order to meet competition from then lower priced and stably priced aluminum. Second, government price controls contributed substantially to holding U.S. producer prices down well below world market levels, as quoted on the London Metal Exchange during periods of peak demand. In the mid to late 1960s, price controls came in the form of "jawboning" by the Johnson Administration. From August 1971 until April 1974 formal price controls during the Nixon Administration were responsible for the wide diversions between U.S. producer prices and LME prices in the 1972-1974 period of strong demand. Voluntary controls during the Carter years exercised a restraining effect upon prices and the ability of prices to truly reflect world market. During the 1970s there really were only two short periods of good demand and strong prices, which would have been reflected in profits and retained earnings as well as in investments for the years of depressed prices: the 1972 to 1974 period and the 1978 to 1981 period, during both of which either formal or voluntary price controls were in effect.

Considerable data exist to validate the point that the long-run economic cost of producing copper is increasing. Commodities Research Unit, Ltd.,[54] has analyzed the cost of developing additional capacity from the mine through the refining stage. Approximately 10 years ago the capital costs per megagram of annual capacity for developing

copper were $2,000 to $2,500; they have now risen to $7,200 to $7,700. An Amax, Inc., official has stated that 1970 costs were $3,500/Mg of annual capacity and $6,500 in 1976. In was estimated that costs would rise to $7,500 in 1980. A Kennecott Corporation director has reported similar cost-per-megagram figures and added that a price of $2.76/kg to $3.30/kg for refined copper would be needed to support such capital outlays. Likewise, an ASARCO official claims that a price of $3.30/kg would be required for new mine developments.

The above costs are for conventional pyrometallurgical smelting. The newer smelting processes such as Noranda and Mitsubishi offer some capital cost savings at that stage due to lower pollution control costs. The hydrometallurgical processes also require less capital. However, the mining costs are the highest part of overall development costs for which limited cost saving techniques exist. The mine development costs in the United States have risen significantly, largely as a result of the shift from higher to lower grades of available copper ores and the sometimes remote locations that require infrastructure costs for towns, roads, etc.

In 1979, the Bureau of Mines analyzed 73 domestic copper properties to determine the quantity of copper available from each deposit and the copper price required to provide each operation with 0 and 15 percent rates of return. They based the study on a 1978 domestic copper reserve base of 92 Tg of copper, of which 74 Tg are recoverable using current technology.[55]

The Bureau estimates that a copper price of $4.56/kg would be required if all properties, producing and nonproducing, were to at least break even. This price increases to $8.40 for the properties to receive at least a 15-percent rate of return. The average break-even copper price for properties producing in 1978, $1.46/kg, was about equivalent to the average selling price for the year. At this price, analysts calculate that only 25 properties could either produce at break-even or receive an operating profit. Of these properties, only 12 could receive at least a 15-percent rate of return.

Annual domestic copper production from 1969 to 1978 averaged 1,337,000 Mg. According to this study, to produce at this level and

to receive at least a 15-percent rate of return, a copper price of $1.81/kg is required, as seen in Figure 9-7. If the United States were to produce the additional 248,000 Mg that were imported each year over this period, a copper price of $1.94 would be necessary.[56]

The report concludes that increases in copper prices are required for many domestic deposits to continue to produce. Many U.S. producers cannot continue to operate at a copper price that has not kept pace with inflated operating and capital costs. Assuming that copper demand and other market conditions warrant it, the increases in copper price that occurred in 1979 will help provide the additional revenue necessary for many operations to continue producing and should encourage companies to begin developing other properties.

In fact, the improvement in copper prices during late 1979 brought back some idled U.S. mine capacity and, more importantly, began to stimulate the consideration of some major new mine projects. More recently, depressed copper prices have altered this situation. To develop a list of possible new U.S. mines that could be brought onstream in the next decade, Commodities Research surveyed the U.S. producers. These results are shown in Table 9-13. They estimate that the total tonnage from projects that stand a reasonable chance of coming onstream before 1990 is about 792 Gg including 167 Gg from mines that had been closed down over the last few years but that could be reactivated. This would be an increase of 53 percent over the 1,523 Gg of capacity that was in operation at the end of 1978.[57]

It has been suggested that long-term potential for higher prices and the high cost of new capacity are significant reasons for the increased purchases of copper properties by oil companies. The reasoning is that oil companies need places for recent heavy cash flows, and diversification to other products is desirable. The oil companies reportedly can wait for expected copper price increases to obtain their return. Further, by purchasing existing facilities rather than building new capacity, they avoid the escalating new capacity costs.

As shown below, U.S. oil (and gas) companies own or have major interests in seven of the largest domestic copper producers:

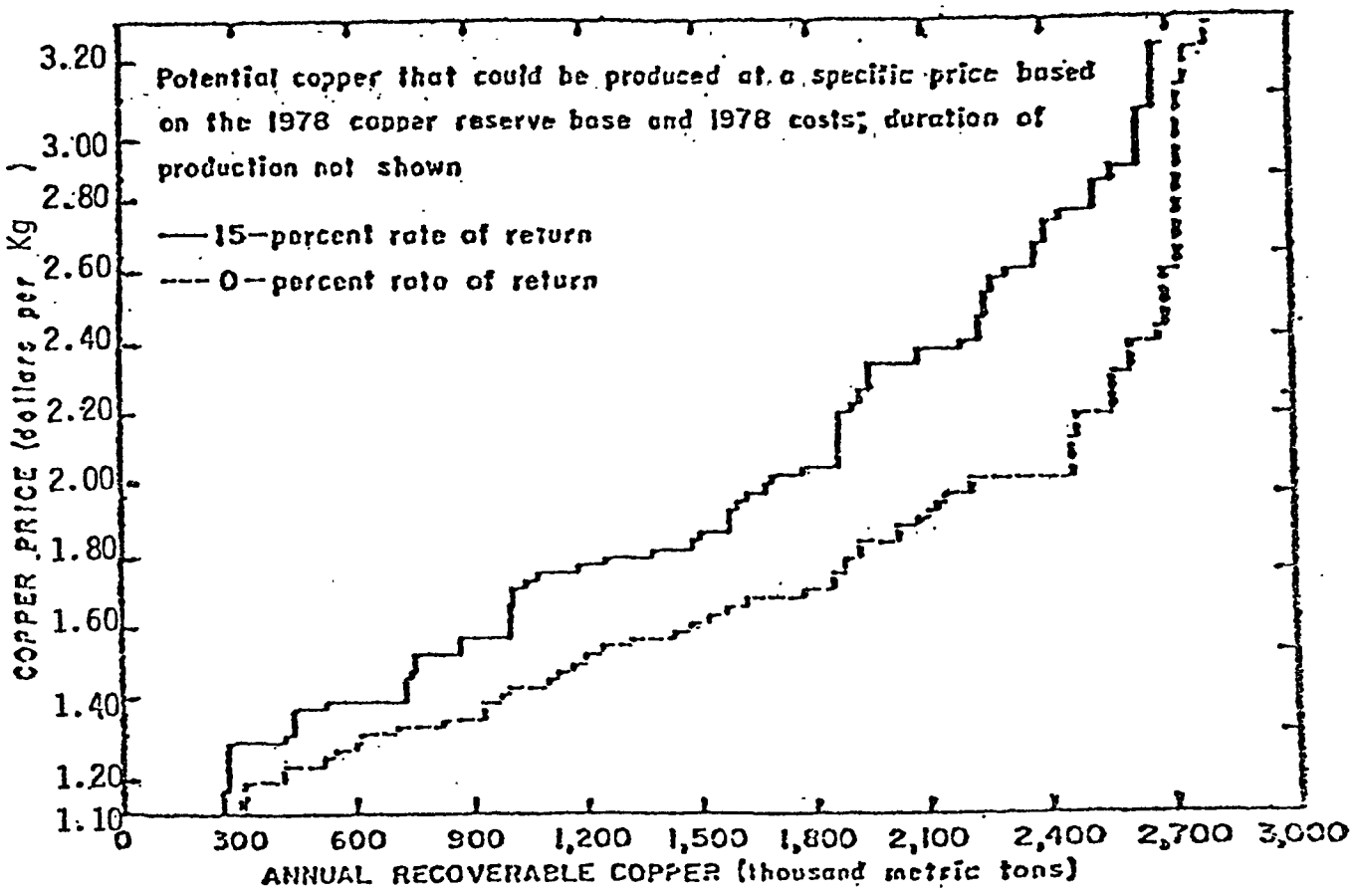

Figure 9-7. Annual recoverable copper available from domestic deposits over a copper price range of $1.10 to $1.30/kg.[56]

TABLE 9-13. U.S. COPPER MINE CAPACITY: CURRENT AND POTENTIAL[57]
(gigagrams/year)

	End of 1978	Planned and potential new
Amax		
T. Tolman		23
Anaconda		
Berkeley	91	
Yerrington[a]		23
Carr Fork		50
Anamax	112	
ASARCO		
Mission	39	
Silver Bell	21	
San Xavier	10	
Sacaton	20	
Others	2	
Troy Hills		18
Casa Grande		91
Cities Service		
Pinto Valley	65	11
(leach)		5
Miami	7	
Miami East		12
Copper Hill	18	
Continental Materials/Union Miniere		13
Continental Oil		91
Copper Range	54	
Cyprus		
Bagdad	65	12
Johnson	5	
Pima		54[b]
Duval		
Sierrita	91	
Mineral Park	18	
Esperanza		14[b]
Eisenhower		12[c]
Exxon		
Crandon		27
Pinos Altos	9	

(continued)

TABLE 9-13 (continued)

	End of 1978	Planned and potential new
Inspiration		
Inspiration	54	
Christmas		7[b]
Ox Hide		5[b]
Kennecott		
Ray	81	45
Chino	59	36
Nevada (leach)		18
Utah	204	27
Noranda		
Lakeshore		59[b]
Newmont (Magna)		
San Manuel	118	13
Superior	39	
Vekol Hills		29
Phelps Dodge		
Ajo	45	18
Morenci	112	
Tyrone	86	
Metcalf	53	31
Safford		54
Ranchers Exploration		
Bluebird	4	4[b]
Old Reliable		2[b]
UV Industries	21	
Other	20	—
Total	1,523	792

[a]Could resume operations for about 3 years before depletion of reserves.

[b]Reactivation.

[c]Mine capacity will be 23.6 Gg, but half will replace Mission (ASARCO).

1. Amax--Approximately 20 percent owned by Standard Oil of California
2. Anaconda--Owned by Atlantic Richfield Company
3. Cities Service--Also a primary copper producer
4. Copper Range--Owned by Louisiana Land and Exploration Company
5. Cyprus Pima Mining Company--Standard Oil Company
6. Duval--Owned by Pennzoil Company
7. Kennecott--Standard Oil of Ohio (British Petroleum).

These copper producers own or control a large portion of domestic copper reserves and mine production and hold a considerable share of U.S. refinery capacity. Their investment in the copper industry is significant, and thus they must expect higher prices and substantial profits in the future.

9.1.13 Substitutes

Substitutes for copper are readily available for most of copper's end uses. Copper's most competitive substitute is aluminum. Other competitive materials are stainless steel, zinc, and plastics. Aluminum, because of its high electrical conductivity, is used extensively as a copper substitute in high voltage electrical transmission wires. According to the Bureau of Mines, some 4 percent of insulated power cable and over 90 percent of bare conductor applicators are currently provided by aluminum. Aluminum has not been used as extensively in residential wire because of use problems and minimal savings.

Aluminum is also potentially interchangeable with copper in many heat exchange applications. For example, automobile companies are still experimenting with the use of aluminum versus copper in car radiators. When copper prices are high or copper supply is limited, cast iron and plastic are used in building construction as a copper pipe substitute. A relatively new substitute for copper is glass, which is used in fiber optics in the field of telecommunications. Fear of long-run substitution for copper is one of the hypotheses cited earlier to explain why the primary producer price of copper is lower than the LME price during high demand periods.

9.1.14 World Production and Consumption of Copper

The United States is the leading copper-consuming country. The United States is also the leader in refined production but is third to Africa and the communist block countries in mine production and second to the communist block countries in smelter production. In 1978 the United States produced 17.7 percent of the world's mine production of copper, 17.4 percent of the smelter production, and 20.8 percent of refinery production. The consumption of the world's refined copper by the United States amounted to 29.9 percent. Tables 9-14 and 9-15 show world production and consumption figures.

While the United States is essentially maintaining its consumption and production levels, world consumption and production are increasing quite rapidly. As a result, the U.S. share of world consumption and production shows a relative decrease.

According to the Bureau of Mines, the United States has 18.4 percent of the world's identified copper resources and 26 percent of the other land-based copper resources.[60]

In 1979 there was a continuation of the large-scale decline in free world copper inventories that began in 1978. Free world stocks declined by 454 Gg in 1979 to a level of 726 Gg. This represents about 1.25 months' consumption, which is a normal inventory. At their peak in 1978, these stocks totaled 1,560 Gg. The drawdown occurred because of steady growth in world consumption from the recessionary lows of 1974-1976 and the stable level of world copper production. Consumption of copper in the free world exceeded refined production in both 1978 and 1979 by approximately 5 percent.[61]

Domestic demand for copper declined in 1980 by about 15 percent due to reduced demand in the housing and automobile industries brought about by periodic high interest rates. The supply of copper also decreased by about 15 percent as a result of a lengthy industry-wide strike.[62] World copper inventories held by producers and commodity exchange warehouses remained at 1979 levels in 1980, far below the 1978 peak of 1,560 Gg.[63]

TABLE 9-14. UNITED STATES AND WORLD COMPARATIVE TRENDS IN REFINED COPPER CONSUMPTION, 1963-1979[58]
(gigagrams)

Years	U.S.	World	U.S. as percent of world
1963	1,590.0	5,519.3	28.8
1964	1,690.0	5,995.4	28.2
1965	1,845.6	6,193.2	29.8
1966	2,157.8	6,444.8	33.5
1967	1,797.5	6,194.8	29.0
1968	1,701.4	6,523.3	26.1
1969	1,944.3	7,148.0	27.2
1970	1,854.3	7,283.4	25.5
1971	1,830.5	7,309.9	25.0
1972	2,028.6	7,944.5	25.5
1973	2,218.6	8,791.6	25.2
1974	1,956.4	8,325.4	23.5
1975	1,396.0	7,460.0	18.7
1976	1,783.0	8,509.0	21.0
1977	1,986.0	9,006.0	22.0
1978	2,181.0	7,289.0	29.9
1979	2,218.0	7,412.0	29.9
Average annual compound growth rate (%)			
1963-1973	3.39	4.77	-
1964-1974	1.47	3.34	-
1967-1977	1.00	3.81	-
1969-1979	1.33	0.36	-

TABLE 9-15. UNITED STATES AND WORLD COMPARATIVE TRENDS IN COPPER PRODUCTION: 1963-1979[59]
(gigagrams)

Years	Mine production of copper (copper content)			Smelter production of copper			Production of refined copper		
	U.S.	World	U.S. as percent of world	U.S.	World	U.S. as percent of world	U.S.	World	U.S. as percent of world
1963	1,100.6	4,624.3	23.8	1,176.3	4,634.8	25.4	1,709.5	5,399.7	31.7
1964	1,131.1	4,798.6	23.6	1,214.2	4,851.4	25.0	1,805.7	5,739.0	31.5
1965	1,226.3	4,962.7	24.7	1,300.9	5,024.4	25.9	1,942.1	6,058.5	32.1
1966	1,296.5	5,215.9	24.9	1,330.3	5,167.0	25.7	1,980.7	6,322.2	31.3
1967	865.5	5,057.6	17.1	782.3	4,891.0	16.0	1,384.9	6,000.5	23.1
1968	1,092.8	5,456.5	20.0	1,148.9	5,507.8	20.9	1,668.3	6,658.6	25.1
1969	1,401.2	5,951.2	23.5	1,438.3	5,972.9	24.1	2,009.3	7,199.8	27.9
1970	1,560.0	6,387.3	24.4	1,489.0	6,309.5	23.6	2,034.5	7,577.8	26.8
1971	1,380.9	6,473.9	21.3	1,360.8	6,380.0	21.3	1,780.3	7,377.8	24.1
1972	1,510.3	7,071.5	21.4	1,533.5	7,003.2	21.9	2,048.9	8,068.0	25.4
1973	1,558.5	7,591.4	20.5	1,582.1	7,445.5	21.2	2,098.0	8,497.3	24.7
1974	1,445.7	7,885.6	18.3	1,424.2	7,933.6	18.4	1,938.3	8,851.5	21.9
1975	1,282.2	6,968.2	18.4	1,357.5	7,535.4	18.0	1,610.7	8,402.0	19.2
1976	1,457.4	7,452.8	19.6	1,438.3	8,026.3	17.9	1,714.2	8,851.2	19.4
1977	1,364.8	7,688.7	17.7	1,346.6	8,187.8	16.4	1,677.0	9,148.8	18.3
1978	1,352.0	7,633.4	17.7	1,343.0	7,708.7	17.4	1,843.0	8,856.6	20.8
1979	1,450.0	-	-	1,396.0	-	-	1,992.0	-	-
Average annual compound growth rate (%)									
1963-1973	3.54	5.08	-	3.01	4.85	-	2.07	4.64	-
1964-1974	2.48	5.09	-	1.61	4.77	-	0.71	4.43	-
1968-1978	2.15	3.41	-	1.57	3.42	-	1.00	2.81	-

NOTE: 1 Gg = 1,000 Mg. One Mg (1,000 kg) equals 1.102311 short tons (907.185 kg = 2,000 lb avoirdupois, where 1 lb avoirdupois equals 0.453592 kg or 453.5924 g).

9.2 ECONOMIC IMPACT ASSESSMENT

9.2.1 Introduction

9.2.1.1 Introduction. This section presents the economic impact analysis of possible revisions to the existing standards of performance for primary copper smelters. As discussed in preceding sections, the possible revisions include the deletion of the current exemption for reverberatory smelting furnaces when the furnaces process high impurity concentrates, and the establishment of emission standards for fugitive emission sources. In addition, the analysis considers the effect of the standards on future capacity additions on expansions at existing smelters. The principal economic impacts analyzed are: the ability of the smelters to increase copper prices in response to an increase in costs caused by a revised standard, and the impact on profits if part or all of the costs cannot be passed on in the form of price increases.

Section 9.2.2 describes the methodology. Sections 9.2.3, 9.2.4, and 9.2.5 describe the supply elasticities, the demand elasticities, and vulnerability to imports, respectively. Section 9.2.6 presents the calculations, and Section 9.2.7 presents the findings.

9.2.1.2 Summary. This analysis focuses on the control costs for three groups of smelters that may become subject to the revised NSPS. The three groups of smelters are new greenfield smelters processing high impurity concentrates, new greenfield smelters processing clean concentrates, and expansions to existing smelters.

The analysis indicates that in view of the competition presented both by certain types of domestic smelters and by Japanese smelters, selected greenfield and expansion scenarios are feasible, but not all greenfield and expansion scenarios are feasible. Specifically, new clean concentrate greenfield smelters are feasible, but new high impurity concentrate greenfield smelters are not feasible. The high baseline costs for the new high impurity concentrate greenfield smelter suggests that it would not be built even in the absence of a revised NSPS. In the case of clean concentrate expansions, scenarios 1b (or

high impurity concentrate without the exemption), 7, 18, and 24 are feasible among the scenarios that passed the screening process within each of the five smelting configurations (I, II, III, IV, and V). Scenarios 11, 15, and 23 are not feasible. For the flash furnace scenarios, the revised NSPS would not require any additional control costs. All of the five flash furnace conversion scenarios are feasible (5, 6, 16, 17, and 22). The single smelting configuration for a high impurity concentrate expansion, 1a, is feasible with the exemption.

9.2.2 Methodology of Impact Analysis

The purpose of this section is to provide an overview of the methodology used in the analysis. Specifics of the analysis are presented in subsequent sections.

Many of the companies that produce refined copper are integrated producers; that is, they own the facilities to treat copper during each of the four principal stages of processing, mining, milling, smelting, and refining. Also, several of the producers are integrated one additional step into the fabrication of refined copper. However, not all companies in the copper industry are integrated producers. There are companies that only mine and mill copper ore to produce copper concentrate and then have the copper concentrate smelted and refined on a custom basis (the smelter takes ownership of the copper) or on a toll basis (the smelter charges a service fee and returns the copper to the owner). The existence of both integrated and nonintegrated producers introduces a complex economic element into this analysis. That complex economic element manifests itself in the choice of the appropriate profit center to focus on for an analysis of this type that affects only one stage of the production process (smelting) in a direct way but has indirect effects on the other stages.

For accounting purposes, integrated producers frequently view the smelter as a cost center, rather than a profit center. However, in an economic sense, the smelter provides a distinct contribution to the production process that ultimately allows a profit to be earned although that profit may be realized for accounting purposes at another stage such as the mine or refinery.

Although this standard directly affects only the smelters, this analysis focuses on the smelter plus refinery as a separate profit center. The mine and mill are excluded. The choice of the smelter plus refinery as a profit center is made to facilitate comparisons between foreign smelting plus refining costs versus domestic costs. This choice facilitates comparisons because when concentrate is shipped to a foreign smelter, the concentrate is both smelted and refined overseas. The transportation cost to ship concentrate overseas is a significant cost. Although smelting and refining are separate production processes, an economic relationship exists between the two. Therefore, because financial information to apportion transportation costs in a manner that properly reflects the economic relationship is not published by foreign smelters, the combination of the smelter and refinery eliminates the need for such an apportionment and permits the use of total transportation costs. Finally, the choice of the smelter plus refinery as a separate profit center presents a conservative analysis in that the economic impacts on the smelter plus refinery will be overestimated if a smelter plus refinery are actually part of an operation that is integrated from mining through refining, but the impacts will not be underestimated for a smelter plus refinery that is not fully integrated from mining through refining. In other words, profits from the mines might be available in some cases to help offset the costs of controls at the smelter. However, this analysis will assume that this situation does not occur.

The choice of analyzing the smelter and refinery segments only has a disadvantage. Most of the studies that have quantified price or supply elasticities for copper have been for the total of mining through refining and have not been segment-specific. Therefore, such studies are useful only in qualitative ways in this analysis rather than in direct quantitative ways.

9.2.2.1 Smelter Competition and Options. Mines have long-run flexibility in deciding where they will send their copper concentrate for smelting. Therefore copper smelters face competition from three sources: other existing domestic smelters, new smelters that may be built, and foreign smelters, especially Japanese.

Japan is a major force among copper-producing countries in terms of its volume of smelting, refining, and fabrication of copper. However, Japan does not have copper ore deposits of any noteworthy size. Therefore it must import concentrates in order to supply its smelting, refining, and fabricating facilities. Japan seeks concentrates from many countries, including the United States. Japan's ability to be competitive with domestic smelters for U.S. concentrates is indicated by the contractual arrangements it has established with Anamax and Anaconda to purchase concentrates. Additionally, the Duval Corporation is reported to have signed a contract to supply concentrates to Japanese smelters. Also, the Japanese smelters have approached many other copper mine owners in the United States. For example, Cyprus Corporation is reported to have seriously considered shipping concentrates from its Bagdad mine to Japan.

The cost of transporting concentrates across the Pacific Ocean is significant. It is noteworthy that Japanese smelters can compete with U.S. smelters in spite of these costs. One reason the Japanese can compete is that their smelters are newer than U.S. smelters and, in theory, are more cost competitive. Other factors that operate to the advantage of Japanese smelters, including a tariff mechanism, are described later.

The existence of competition for concentrates introduces what is referred to in this analysis as a "trigger" price. The "trigger" price is that price which triggers or provides an economic incentive for the supplier of concentrate to change to another smelter and refinery. If a given smelter charges a service fee in excess of competing smelters, that smelter will lose business and eventually be forced to cease operations. In the case of new smelters or expansions, the new process facilities will not be built. Faced with an increase in costs, a smelter could respond using one of three options, or any combination of the three. First, the smelter could pass the costs forward in the form of a price increase. Two important considerations with respect to a price increase are: the prices of competitors in

the copper business and the elasticity of demand for the end users of copper. For example, even if all copper producers experience the same increase in costs, at some point the end users of copper will consider changing to a substitute. Second, the smelter could absorb the cost increase by reducing its profit margins, and thereby reducing its return on investment (ROI). If the smelter's profit margins are reduced significantly it will cease operation. Third, the smelter could pass the costs back to the mines by reducing the price it is willing to pay for concentrate. An important consideration in setting the service fee a smelter charges for custom or toll smelting is the fact that the concentrate may be shipped elsewhere; e.g., to Japan. Market conditions suggest that the option of passing costs back to the mines does not seem feasible at this time, due to the existence of excess smelting capacity.

9.2.2.2 Steps of the General Methodology. Existing smelter capacity is presently underutilized. In terms of a supply function, the lowest cost smelters would obtain concentrates first. Because in the short run the existing underutilized smelters need to recover only their variable costs to justify continued operation, they are the lowest cost producers (both fixed and variable costs must be recovered to justify continued operation in the long run). As a result, before any new smelter capacity is added, existing smelter capacity must return to a normal utilization rate. Once market forces have exhausted the lowest cost capacity (existing smelters), then the choices of new greenfield capacity, expanded existing capacity, or Japanese capacity become relevant. Therefore, the following discussion of new capacity is predicated on an increase in demand sufficient to require new capacity.

In evaluating the economic feasibility of expanding capacity, costs must be assembled for both new greenfield units and the several expansion options. These costs are then compared against an estimate of what it would cost for a Japanese smelter to buy concentrate in the United States, smelt and refine it in Japan, and return it to the United States for sale. Any options exceeding this cost level will probably be rejected by a company as unsound.

The next step is to calculate the maximum percent price increases that will be required under each option. This yardstick serves as an upper bound to show the maximum cost that must be passed through to the consumer so that there will be no effect on a company's profit position. Since copper prices tend to move only slowly, there is little chance that costs can be passed through completely. The opposite bound is the absorption by the company of all control costs with the result that profit margins are lowered.

9.2.3 Price Elasticity of Supply

Considerable time and effort, by others, have gone into the development of econometric models of the copper industry. These models attempt to quantify the dynamic workings of the copper market. Selected aspects of these models are summarized below in the interest of thoroughness.

Table 9-16 displays the various price elasticities of supply estimates produced by the better-known econometric copper models. The Fisher, Cootner, and Baily (FCB) model considers U.S. mine production as a function of the real price of copper (U.S. producer price deflated by the U.S. wholesale price index) and U.S. mine production lagged one period. The FCB model estimates the U.S. price elasticity of supply to be 0.45 in the short run and 1.67 in the long run. This implies that a 1-percent increase in the price of copper results in a 0.45-percent increase in the quantity of copper supplied in the short run and a 1.67-percent increase in the long run.

Mikesell has questioned the appropriateness of the FCB supply model.[67] First, he notes that the U.S. primary copper industry tends to behave more as a price maker than as a price taker. Thus, one must be skeptical of the behavioral underpinnings of the model. Second, marginal or variable costs do not enter into the model's specification at all. Third, the partial adjustment hypothesis (i.e., using supply lagged one period to capture a partial adjustment toward a static equilibrium) implied by the model is both an inadequate and an unrealistic means of explaining changes in supply. Mikesell believes

TABLE 9-16. PRICE ELASTICITIES OF SUPPLY ESTIMATES[a]

Time period	Short run	Long run	Study conducted by
1950-66	0.45	1.67	Fisher, Cootner, and Baily[b]
1950-67	0.34	0.85	Charles River Associates, Inc.[c]
1970	-	0.61	U.S. Bureau of Mines[d]

[a]Elasticities evaluate at mean values.

[b]Reference 64.

[c]Reference 65.

[d]Reference 66.

the entire process of exploration and development over the last decade or so cannot be explained simply by reference to past prices or the lag structure assumed in the FCB model.

The Charles River Associates (CRA) model builds on and is a substantial improvement over the FCB model. It incorporates additional explanatory variables, such as a capacity index and an index of factor prices. As Table 9-16 shows, the CRA model estimates the short-run supply elasticity of copper in the United States to be 0.34 and the long-run supply elasticity to be 0.85.

The third estimate of the long-run supply elasticity of copper noted in Table 9-16 is based on a 1973 Bureau of Mines study. According to this study (based on 1970 data), the total known U.S. domestic copper reserves available at a price of $1.10/kg (and assuming a 12-percent return on investment) would be 76 million megagrams. At a price of $4.40/kg (also assuming a 12-percent return on investment), the available supply would be 164 million megagrams. The implied price elasticity of supply is 0.61.

Given the difficulties with the FCB model, the range for the long-run price elasticity of supply will be taken to be 0.61 to 0.85 for the purposes of this analysis. The price elasticity of supply estimate is used here to provide added insight in a qualitative sense rather than in a purely quantitative sense.

9.2.4 The Price Elasticity of Demand

Table 9-17 contains several price elasticity of demand estimates for copper. As in the case of the price elasticity of supply estimates above, the price elasticity of demand estimates are provided here to add insight of a qualitative nature into the operation of the copper market. Concerning short-run own-price elasticity (rather than cross-price elasticity) estimates, the demand appears to be rather inelastic, ranging from a low of -0.21 to a high of -0.47. In the long run, of course, the demand is much more elastic, ranging from a low of -0.64 to a high of -2.88. For the purposes of this analysis, the relevant (long-run) price elasticity of demand is taken to be -0.64, primarily because this is the elasticity employed in the Midas II model.

TABLE 9-17. PRICE AND INCOME ELASTICITIES OF DEMAND ESTIMATES[a]

Time period	Own price elasticity		Cross-price elasticity (aluminum)		Income (activity) elasticity[b]		Study conducted by
	Short run	Long run	Short run	Long run	Short run	Long run	
1950-73	-0.47	-0.64	0.61	0.84	1.30	1.78	Arthur D. Little, Inc.[c]
1950-67	-0.21	-2.88	0.46	6.30	0.26	3.56	Charles River Associates, Inc.[d]
1950-66	-0.21	-0.90	0.24	1.01	0.33	1.40	Fisher, Cootner, and Baily[e]

[a]Elasticities evaluated at mean values.

[b]The income (activity) measures used in each model are as follows: The ADL and CRA models used the FRB index of durable goods manufacturers; and the FCB model used the FRB index of industrial production.

[c]Reference 68.

[d]Reference 69.

[e]Reference 70.

Accordingly, a 1-percent increase in the price of copper is expected to decrease the quantity of copper demanded by 0.64 percent, assuming everything else remains unchanged.

Cross-price (aluminum) and income (activity) elasticity estimates are also reported in Table 9-17. The demand for copper appears to be somewhat insensitive to aluminum prices in the short run, but considerably more sensitive in the long run. In fact, according to the CRA model, a 1-percent decrease in the price of aluminum can result in as much as a 6.3-percent decrease in the demand for copper. With respect to the income (activity) elasticities, the results are mixed in the short run, but are relatively elastic in the long run, ranging from a low of 1.40 to a high of 3.56.

9.2.5 Analysis

This section presents the calculations of the control costs on the common basis of cents per kilogram of copper to permit direct comparison across greenfield smelters and expansions of various sizes. The various total costs for greenfield smelters and expansions are taken from Chapter 8. After the costs are converted to a common basis the results are analyzed according to the methodology described earlier.

9.2.5.1 Costs of New Smelting Capacity. Table 9-18 shows the costs in cents per kilogram of the control option for a new high impurity greenfield smelter. The costs are 70.3¢ for process costs, 2.8¢ for the revised NSPS, and 1.5¢ for fugitive control costs. Therefore, the total smelting cost is 74.6¢/kg.

The next smelter of interest is a new greenfield smelter processing clean concentrates using a flash furnace. Table 9-19 shows the costs for a flash furnace. The costs without the revised NSPS costs are 33.5¢/kg. The revised NSPS fugitive costs add 1.3¢/kg. Therefore the total cost for a new greenfield smelter processing clean concentrates is 34.8¢. It should be observed that, as expected, the costs for a new greenfield smelter processing clean concentrates are less than the costs for a new greenfield smelter processing high impurity concentrates; however, the size of the difference is substantial. By-product revenues are excluded to present a conservative analysis. Even if

TABLE 9-18. COST DATA FOR NEW HIGH IMPURITY GREENFIELD SMELTERS[a] (MHR-RV-C)[b]

Cents/kilogram					
(Process	+	SO_2)	+	NSPS	= Total
70.3			+	2.8	= 73.1

Fugitive control costs[c]

(Collection, 10^3 \$)

1. MHR-RV-CV

AC (1,401 + 234) ÷ 110,000 = 1.5¢/kg

2. FF-CV

AC 1,401 ÷ 110,000 = 1.3¢/kg

[a]Excluding sulfuric acid credits.

[b]See Table 8-10.

[c]See Table 8-11.

TABLE 9-19. COST DATA FOR NEW GREENFIELD SMELTER PROCESSING CLEAN CONCENTRATES USING A FLASH FURNACE

Baseline annualized costs[a] (10^3 \$)	NSPS fugitive costs (AC) (10^3 \$)	Total annualized costs (10^3 \$)	Blister production[b] (Mg/yr)	Baseline annualized costs (¢/kg)	NSPS fugitive costs (AC) (¢/kg)	Total annualized cost (¢/kg)
36,900	1,401	38,301	110,000	33.5	1.3	34.8

[a]Excluding sulfuric acid credits.

[b]Based on 1,364 Mg/day of feed × 350 days/yr or 477,400 Mg of feed/yr with copper content of 0.235 and a recovery rate of 98 percent.

by-product revenues were included, it is not expected that the costs for a new greenfield smelter processing high impurity concentrates would decline to the level of a new greenfield smelter processing clean concentrates.

The third smelter group of interest is the expansion situation at an existing smelter processing either clean or high impurity concentrates. For expansions processing clean concentrates, there are 26 expansion scenarios that are divided into five smelting configurations. Within each of the five smelting configurations there is an additional subdivision according to the percent expansion--20, 40, 50, 60, or 100 percent. Within the 26 expansion scenarios, most of the scenarios are direct expansions. However, there are seven scenarios that represent a conversion to a flash furnace--5, 6, 16, 17, 22, 24, and 25. Throughout the remainder of the analysis both the lowest cost direct expansion scenarios and the five flash furnace scenarios are presented. Table 9-20 shows the lowest cost expansion scenarios within each percent expansion (1, 7, 11, 15, 18, 23, and 26) plus the seven flash furnace conversion scenarios. The above group is reduced to the lowest cost scenario within each of the five smelting configurations (excluding the seven flash furnace conversion scenarios). The 20-percent expansions have lower costs than the 40-percent expansions (for IV the single available scenario is a 40-percent expansion). For the five smelting configurations, the lowest cost scenarios are 1b, 7, 18, 23, and 26. These scenarios have costs of 32.0, 30.2, 14.9, 60.6, and 22.4¢/kg, respectively. For the seven flash furnace conversion scenarios (5, 6, 16, 17, 22, 24, and 25), the costs are 18.9, 22.9, 22.0, 25.2, 20.5, 17.7, and 18.8¢/kg, respectively. As shown in Table 9-20, the control costs due to the revised NSPS add from 0 to 17.4¢/kg for the lowest cost scenarios within each of the five smelting configurations. These scenarios, 1, 7, 18, 23, and 26, result in total costs of 32.0, 35.0, 17.0, 63.7, and 22.4¢/kg, respectively. There are no fugitive control costs for any of the five flash furnace conversion scenarios.

TABLE 9-20. SMELTER COST DATA FOR EXPANSION SCENARIOS[a]
(¢/kg)

Smelting configuration	Expansion scenario	Percent expansion	Smelter production costs[b]	NSPS fugitive control costs AC (capture + collection)
		Clean concentrates		
I (MHR-RV-CV)	1b	20	32.0	5.6
	5	50	18.9	0.0
	6	100	22.9	0.0
II (RV-CV)	7	20	30.2	4.8
	11	50	42.4	17.4
	15	40	67.1	1.3
	16	50	22.0	0.0
	17	100	25.2	0.0
III (FBR-RV-CV)	18	20	14.9	2.1
	22	60	20.5	0.0
IV (EF-CV)	23	40	60.6	3.1
	24	50	17.7	0.0
	25	100	18.8	0.0
V (FF-CV)	26	20	22.4	0.0
		High impurity concentrates (with exemption)		
I (MHR-RV-CV)	1a	20	32.0	0.0

[a]Excluding sulfuric acid credits.

[b]Smelter production costs includes all process and control costs other than those associated with a possible revision of the NSPS. See Tables 8-14 and 8-15.

Table 9-20 also shows the costs for expansions at an existing smelter that processes high impurity concentrates. The cost of scenario 1b is 32.0¢, without the revised NSPS control cost, and a revised NSPS control cost of 5.6¢, or a total cost of 37.6¢.

9.2.5.2 Costs of Existing Smelters. In addition to the three smelter groups just described, there are two additional groups that are not subject to the revised NSPS but must be considered here because of their competition with smelter groups that are subject to the revised NSPS. The fourth group is existing smelters. An existing smelter will not become subject to the revised NSPS unless it decides to expand (ignoring, for illustration purposes, modifications or reconstructions). If existing smelters have lower costs than the costs associated with an expansion, and if such existing smelters do not expand, then the existing smelters will represent a constraint on the ability of an expansion to increase prices to offset higher costs. Also, if expansions do occur, the expansions are not likely to all occur at the same time and thus introduce the costs of the revised NSPS uniformly across the industry. Therefore the incurrence of revised NSPS costs are likely to be phased in gradually, which suggests that smelters that become subject to the revised NSPS may initially have to absorb a greater part of the costs than they will later as more of the industry experiences a similar upward shift in the costs curve as a result of the revised NSPS.

Smelters do not publish their production costs. Therefore, figures used to represent existing smelter production costs are, by necessity, estimates. These estimates could perhaps be improved if smelters were to publish their production costs, but this action would carry with it the not insignificant risk of competitive harm. In the absence of production costs published by individual firms, this analysis uses the following estimates of smelter production costs for the five smelting configurations being analyzed: configuration I, 40.7¢/kg; configuration II, 39.6¢/kg; configuration III, 39.6¢/kg; configuration IV, 41.8¢/kg; and configuration V, 35.2¢/kg.[71]

9.2.5.3 Costs of Japanese Smelters. The fifth, and last, smelter group is also not subject to the revised NSPS, but must be considered here because of its competition with the other smelter groups. The fifth smelter group is composed of the Japanese smelters.

On December 17, 1980, representatives of the Anaconda Company and a consortium of seven Japanese copper products, led by Nippon Mining, signed a formal agreement providing for smelting and refining of Anaconda Company concentrates by the seven Japanese firms.[72] Under the agreement, Anaconda will ship 390,000 Mg/yr of copper concentrates to Japan over the first 2 full years, and the amount will be increased to 500,000 Mg/yr for the remaining 5 years of the contract.[73] This figure accounts for approximately 80 percent of the company's annual copper concentrate output. At an average of 26 percent copper, the 390,000 tons of concentrates equates to 101,400 Mg of copper and the 500,000 tons equates to 130,000 Mg of copper. Nippon Mining will receive half of the concentrates, with the remainder divided between Sumitomo Metal Mining, Mitsui Mining and Smelting, Mitsubishi Metal, Dowa Mining, Furakawa, and Nittestu Mining.

The Japanese copper producers have the option of toll-smelting Anaconda's concentrates and returning them to the U.S. company in the form of metal, or the concentrates may be purchased by the Japanese firms if Anaconda is notified beforehand.[73] It was estimated that 50,000 Mg of refined copper will be produced in Japan from Anaconda Company concentrates in 1981 (1981 will not represent a full contract year, hence only 50,000 Mg). Of this number, 9,000 Mg were to be processed on a toll basis and returned to Anaconda.[72] It should be noted, however, that Anaconda has recently closed its Montana operations, which supplied much of this concentrate.

Smelting and refining costs charged by Japanese producers vary with what the market will bear. In August of 1978, Mitsui Mining and Smelting contracted to process Philippines Marinduque concentrates for 31.9¢/kg. The spot market smelting and refining prices dropped to 22.0¢/kg in April 1979 and fell further until climbing back to a range of 20.9 to 23.1¢/kg in August 1979. Spot prices improved throughout

the remainder of 1979 and reached a level of 39.6¢/kg for smelting and refining in July 1980.[74] A spot price is generally higher than what a supplier can obtain for a long-term contract. More recently, the cost of Japanese smelting was estimated at 23.5¢ and refining at 17.6¢/kg.

The Japanese willingness to outbid domestic smelters for U.S. concentrates is reduced but is not offset by the higher transportation costs to ship concentrate to Japan. The transportation costs of concentrate overland by rail to a U.S. port are reported as 13.0¢/kg of contained copper.[75] Port charges for handling, wharfage, and insurance are 6.25¢/kg of contained copper. The transportation cost of concentrate across the Pacific is reported as varying from 7.5 to 13.0¢/kg of contained copper.[75] For this analysis, the midpoint of 7.5 and 13.0 is used, or 10.25¢. The cost to return refined copper from Japan to the United States is 5.9¢/kg. Indications are that much of the concentrate imported to Japan is also fabricated in Japan rather than exported as refined copper. For example, in the case of the Anaconda concentrates, in 1981 the Japanese smelters originally contemplated returning imported copper concentrates in the form of metal to the U.S. supplier by around 15,000 tons out of 100,000 tons of contained copper.[76] In other words, for 1981, approximately 15 percent of the contained copper was expected to be returned to the United States. The percentage is subject to change from year to year depending upon Japan's internal demand for copper. For this analysis, it is assumed that the metal produced will be returned to the United States, yielding a total transportation cost of 35.4¢/kg. To the extent that metal is not returned to the United States, transportation costs would be lower by 5.9¢/kg. The smelting cost of 23.5¢ plus the refining cost of 17.6¢ plus the transportation cost of 35.4¢ plus a profit margin of 6.5¢ yields a total Japanese trigger price of 83.0¢/kg of refined copper.

It should also be noted that although in some cases the Japanese are willing to pay a higher price for U.S. concentrates than U.S. smelters are willing to pay, this does not mean that they could totally replace U.S. smelters, because the Japanese do not have sufficient

capacity. The Japanese copper smelting industry is composed of 14 smelters with a total capacity of 1,235,000 Mg/yr. The U.S. copper smelting industry is larger, with 15 smelters and a total capacity of 1,723,000 Mg/yr. The normal capacity utilization rate of the Japanese copper smelter industry in recent years has been about 75 to 80 percent. In the unlikely event that the Japanese operated at a 100-percent capacity utilization rate for a sustained period of time, the extra capacity between the historical average of 75 to 80 percent utilization and 100 percent utilization results in 250,000 to 310,000 Mg/yr of additional capacity. If announced Japanese capacity expansions of 72,000 Mg/yr are added, the maximum capacity to accept additional concentrates would be 322,000 to 382,000 Mg/yr, using optimistic assumptions and ignoring the effect of internal Japanese demand on smelting capacity. The significance of the above is that in any particular case the Japanese may be willing to outbid U.S. smelters and attract concentrates from any U.S. mine; thus the trigger price is a constraint operating on U.S. producers. However, the Japanese cannot totally replace U.S. smelting capacity and, as a result, as Japanese capacity utilization rates increase and approach maximum capacity, the Japanese trigger price should increase and thereby reduce pressure on U.S. producers.

9.2.5.3.1 Japanese copper industry. The Japanese copper industry has increased production over the past 10 years in all segments except mining and secondary smelting. The Japanese copper industry's installed capacity is 1,235,000 Mg/yr.[77] Capacity utilization rates achieved in 1979 and 1980 are 80.5 percent and 81.2 percent, respectively.[77]

The volume of Anaconda Company concentrates expected to be processed in Japan is approximately equal to 10 percent of total Japanese imports of copper concentrates.[72] The 50,000 Mg of refined copper processed from Anaconda concentrates in 1981 should raise the Japanese capacity utilization rate to approximately 85 percent in 1981, assuming installed capacity remains constant. The utilization rate will increase further in 1982 to about 89 percent, when the full level of 390,000 Mg/yr of concentrates is sent by Anaconda. Nippon

Mining, expected to receive about half of the concentrates each year, is remodeling an idle 4,000-Mg/mo electrolytic refinery into a 5,000-Mg/mo facility. By 1983, when the remodeling is completed, the Saganoseki smelter and refinery will operate at a rate of 15,000 Mg/mo.[72]

9.2.5.3.2 Tariff mechanism. One example of foreign government assistance to the copper industry occurs in Japan. Japanese copper producers operate under a system that permits the payment of a premium for concentrates, which is then recovered through a premium for refined copper due to a protected internal market supported by a high tariff. Japan imposes high import duties on refined, unwrought copper while allowing concentrates to be shipped into the country duty-free. Duty on refined unwrought copper is currently (1981) 8.2 percent of the value of the copper, including freight and insurance, as opposed to a U.S. customs duty of 1.3 percent of the value of copper. The import duties allow Japanese producers to sell their refined copper in Japan at an artificially high price and still remain competitive with foreign producers.

Specifically, copper concentrates and ore imported into Japan are free of duty. Refined copper imported into Japan is subjected to a tariff of 15,000 yen/Mg.[78] Using a December 15, 1980, exchange rate of $0.004633/yen, the tariff is $0.0849/kg. Refined copper may be duty-free under the preferential tariff, subject to certain limitations.

As a result of the tariff situation, Japanese copper producers can pay a premium to attract concentrates and can recover the premium through a premium on the price of the refined copper used in Japan. If the refined copper is returned to the customer outside of Japan, the premium on the price of refined copper is not recovered because world prices would prevail in this case, rather than the protected internal Japanese producer price. As a result, the principal interest of the Japanese copper producers is in producing copper for internal consumption. Toll smelting in Japan is generally used as a means of balancing inventories. The absence of a tariff on ore and concentrates encourages companies to import ore into Japan. The presence of a tariff on refined copper and the costs of holding metal in Japan discourage companies from importing refined copper into Japan.

The Japanese tariff on refined copper, combined with the cost of holding the metal until users have a demand for it, provides an extra margin for domestic copper producers. The Japanese producers can charge what the market will bear for their copper and still remain competitive with the importers. The loss incurred by Japanese producers in charging toll customers low processing rates is covered by the extra margin of profit realized by charging prices for domestic refined copper at competitive import levels.

Robert H. Lesemann (industry expert, formerly with Metals Week, now with Commodities Research Unit), in an affidavit for the Federal Trade Commission, outlined the situation in September 1979:

> It is generally true that operating costs of U.S. smelters are the same as smelters in Japan, Korea, and Taiwan. The competitive advantage is without doubt due to the subsidies outlined above. Thus, while the terms of the Nippon-Amax deal have not been revealed, the treatment charge is likely well below the operating cost levels of U.S. smelters.[79]

9.2.5.3.3 Other Japanese advantages. The tariff mechanism described above is one example of government assistance to the Japanese copper industry. Another example is provided by the Japanese government's approval for a brass rod production cartel. In an effort to reduce stocks and boost profit margins for the ailing Japanese brass rod industry, the government approved the formation of a temporary cartel to cut production.[80]

Apart from government assistance, other reasons are cited for the advantage of the Japanese copper industry over the U.S. copper industry. Additional reasons include:

- A high debt-to-equity ratio--a typical Japanese smelter may have a debt-to-equity ratio that is 0.8 to 0.9.[81] [82] [83]
- Lower labor rates--Japanese hourly rates in the primary metals industry were estimated to be about two-thirds of the U.S. rate in 1978.[84]
- By-product credits--the market for by-products, sulfuric acid, and gypsum is better in Japan than in the United States and reduces operating costs significantly.[81]

9.2.5.4 Refining Costs. Preceding sections have described the pollution control costs and process costs associated with the smelter alone. This section presents the cost of refining copper. The costs of smelting plus refining plus transportation form the overall cost of the profit center. The addition of the cost of refining to the overall cost of the profit center permits a more meaningful comparison of the Japanese alternative and the U.S. alternative. The comparison is more meaningful because concentrates sent to Japan are both smelted and refined in Japan. Therefore, the U.S. alternative must be presented on the basis of both smelting and refining.

As in the case of the smelters, the costs of the refineries vary somewhat among the actual refineries. However, in keeping with a model plant analysis, and because the focus of the analysis is on the smelters rather than the refineries, a model refinery cost is used. The model refinery cost used is 23.1¢/kg. This 23.1¢/kg represents 21.8¢ for variable costs and 1.3¢ for fixed costs.[85] The original refinery cost estimate[35] was updated from 1973 dollars to 1981 dollars by a factor of 2.33 using an index developed by Lewis and Bhappu for the copper industry.[86]

9.2.5.5 Transportation Costs. Transportation costs are a significant part of the overall production cost of refined copper. The transportation costs included here cover the transportation of concentrate from the mill to the smelter and transportation of blister from the smelter to the refinery. A significant part of the cost of transporting concentrate is due to the fact that only about 26 percent of total concentrate is copper and the remainder is waste. Therefore, all transportation costs used here are expressed on the basis of contained copper. A total transportation cost of 4.4¢/kg is used here to represent a model transportation cost.

9.2.5.6 Total Costs. The individual cost components of smelting, refining, and transportation were described in previous sections. Figures 9-8 and 9-9 show a summary of those costs for each of the cases described earlier.

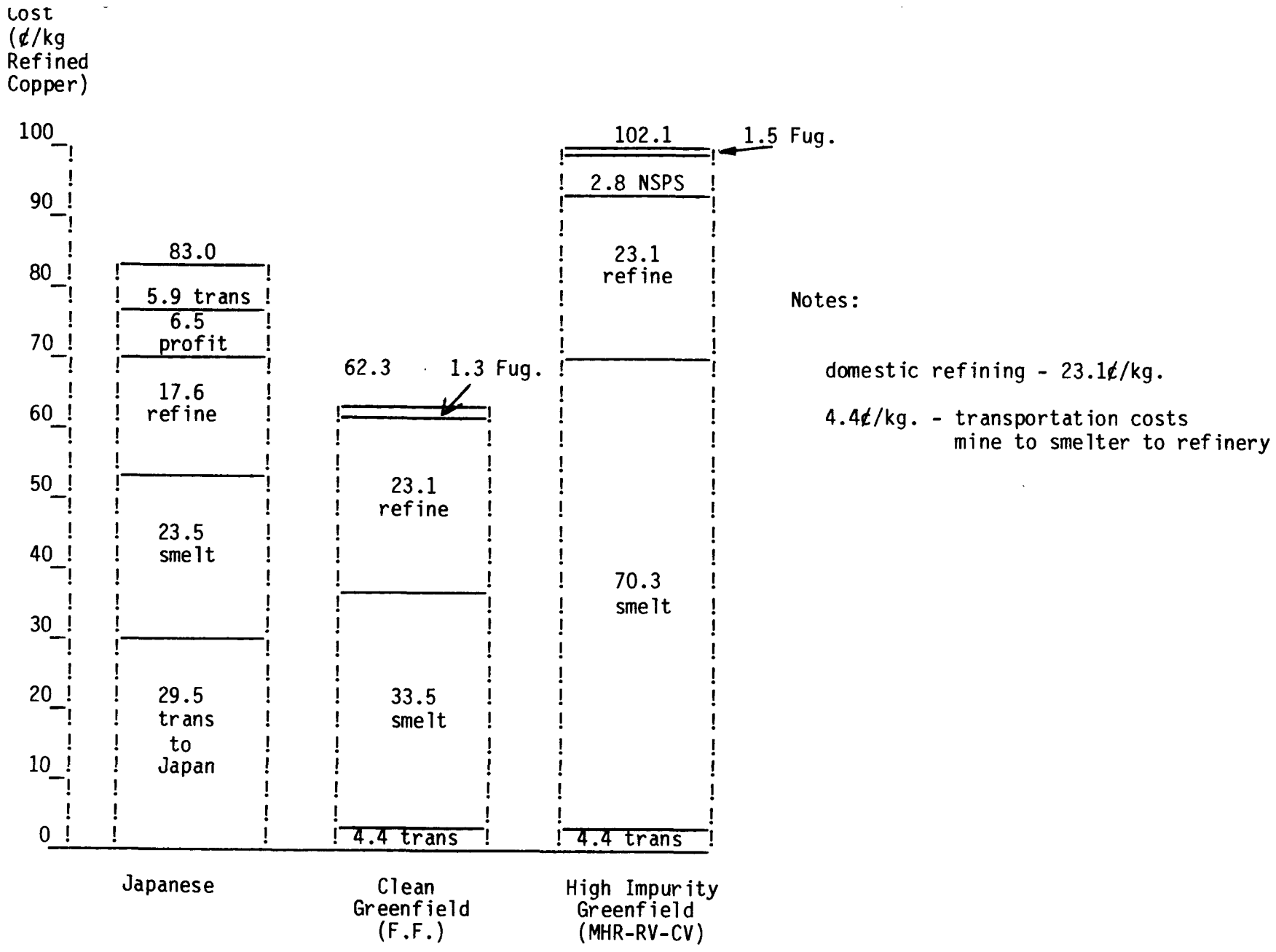

Figure 9-8. Costs for smelting and refining in Japan vs. costs at new smelters in the United States.

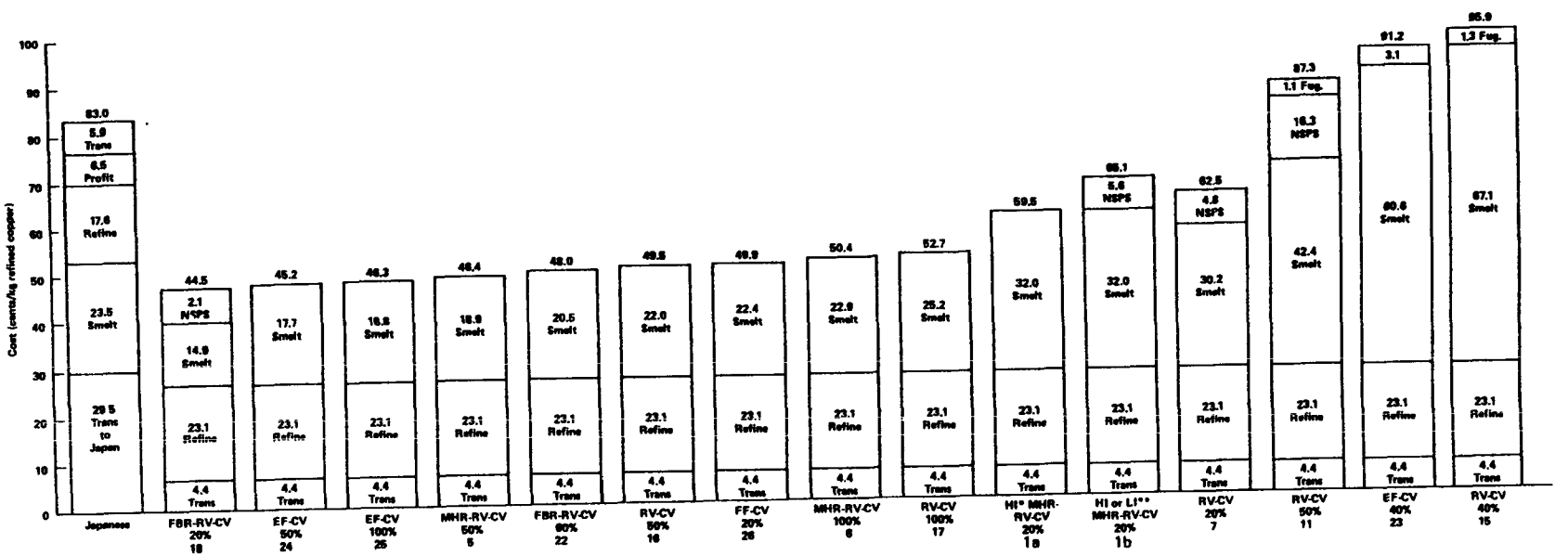

NOTES: Domestic refining — 23.1 cents/kg
4.4 cents/kg — Transport, Mine-Smelter-Refinery
*High-impurity concentrate with exemption
**High- or low-impurity concentrate without exemption

Figure 9-9. Costs for smelting and refining in Japan vs. costs at expanding smelters in the United States.

9.2.6 Findings

9.2.6.1 Maximum Percent Price Increase. Insight into the economic impact of the revised NSPS can be gained by examining the maximum percent price increase that is necessary to pass all control costs forward in the form of a price increase. A complete pass forward of costs may not be possible in every case, and later this assumption is relaxed. However, assuming a complete pass forward is possible in every case introduces a common reference point, which then facilitates comparison of various base cases and scenarios.

Table 9-21 shows such a percent price increase comparison for selected cases. The cases selected are for high impurity greenfield smelters, clean greenfield smelters, clean concentrate expansions, and high impurity concentrate expansions. The cases selected are the least-cost choices for each smelting configuration and for each percent expansion scenario within the smelting configurations. The percent price increases are calculated using a simplified method for ease of presentation. For Table 9-21 the percent price increases are calculated by dividing the costs associated with the revised NSPS by the appropriate baseline production costs (both expressed in cents per kilogram). The results are shown in Table 9-21 for two circumstances--nonintegrated and integrated producers. The first circumstance is the more conservative and presents the results on a nonintegrated basis for the smelter plus refinery alone, excluding the mine and mill. Because many of the producer are integrated from mining through refining, the nonintegrated results are shown in comparison to the results for an integrated producer if the price of refined copper is increased to pass the costs forward. The refined copper price used is the average price for 1981, 187¢/kg. Table 9-21 shows that for a nonintegrated smelter and refinery the percent price increase may range from 0 to 24.9 percent for the clean concentrate expansion. For high impurity concentrate cases the range is 4.4 to 9.4 percent. For an integrated producer the percent price increases are substantially less, ranging from 0 to a high of 9.3 percent.

TABLE 9-21. MAXIMUM PERCENTAGE PRICE INCREASE[a]

Smelting configuration	Control option or expansion scenario	Percent expansion	Nonintegrated producer percent price increase[b]	Integrated producer percent price increase[c]
High impurity concentrate greenfield smelter				
		NA	4.4	2.3
Clean concentrate greenfield smelter				
		NA	2.1	0.7
Clean concentrate expansion				
I	1b	20	9.4	3.0
	5	50	0.0	0.0
	6	100	0.0	0.0
II	7	20	8.3	2.5
	11	50	24.9	9.3
	15	40	1.4	0.7
	16	50	0.0	0.0
	17	100	0.0	0.0
III	18	20	5.0	1.1
	22	60	0.0	0.0
IV	23	40	3.5	1.7
	24	50	0.0	0.0
	25	100	0.0	0.0
V	26	20	0.0	0.0
High impurity concentrate expansion (with exemption)				
I	1a	20	0.0	0.0

NA = Not applicable.

[a]Data from Table 9-23.

[b]Nonintegrated producer includes smelter and refinery, but excludes mine and mill.

[c]Integrated producer includes mine, mill, smelter, and refinery.

9.2.6.2 Maximum Percent Profit Reduction. Apart from the calculation of maximum percent price increase, additional insight into the economic impact of possible revisions to the NSPS can be gained by making the opposite assumption from maximum percent price increase; that is, zero percent price increase, or complete cost absorption. The assumption of complete control costs absorption provides a measure of the reduction in profits if the control costs are absorbed completely.

Table 9-22 is similar in format to Table 9-21, but Table 9-22 shows the results of complete control cost absorption. Again, the results are shown for both a nonintegrated (smelter plus refinery alone) and an integrated producer (mining through refining). A 10-percent profit margin is used and the margin is reduced accordingly, depending on the magnitude of the costs absorbed. Table 9-22 shows that the maximum profit reduction ranges from zero profit reduction to 100 percent profit reduction.

Generally, the high impurity concentrate cases, both greenfield and expansions, have maximum percent profit reductions that are considerably higher than the profit reductions for the clean concentrate cases. This situation assumes that the high impurity reverberatory furnace exemption is deleted. The range for high impurity concentrate cases is 23.0 to 93.3 percent, while the range for clean concentrate is zero to 100.0 percent. In addition to the large relative difference in profit reductions between high impurity concentrate cases and clean concentrate cases, the actual level of profit reductions for high impurity concentrate cases is also large.

9.2.6.3 Results. Table 9-23 summarizes the costs. The new greenfield smelter processing high impurity concentrates is not feasible and, due to its high baseline costs, would not be feasible even in the absence of a revised NSPS. A new greenfield smelter processing clean concentrates is feasible. For the clean concentrate expansions, scenarios 1b (or high impurity concentrate without the exemption), 7, 18, and 26 are feasible. Scenarios 11, 15, and 23 are not feasible. For the flash furnace conversion scenarios, the revised NSPS would not require any additional control costs. All of the seven flash furnace

TABLE 9-22. MAXIMUM PERCENT PROFIT REDUCTION[a]

Smelting configuration	Control option or expansion scenario	Percent expansion	Nonintegrated producer percent profit reduction[b]	Integrated producer percent profit reduction[c]
High impurity concentrate greenfield smelter				
		NA	Exceeds trigger price	
Clean concentrate greenfield smelter				
		NA	21.3	7.0
Clean concentrate expansion				
I	1b	20	93.3	29.9
	5	50	0.0	0.0
	6	100	0.0	0.0
II	7	20	82.8	25.7
	11	50	Exceeds trigger price	
	15	40	Exceeds trigger price	
	16	50	0.0	0.0
	17	100	0.0	0.0
III	18	20	47.2	11.2
	22	60	0.0	0.0
IV	23	40	Exceeds trigger price	
	24	50	0.0	0.0
	25	100	0.0	0.0
V	26	20	0.0	0.0
High impurity concentrate expansion (with exemption)				
I	1a	20	0.0	0.0

NA = Not applicable.

[a]Data from Table 9-23.

[b]Nonintegrated producer includes smelter and refinery, but excludes mine and mill.

[c]Integrated producer includes mine, mill, smelter, and refinery.

TABLE 9-23. SUMMARY OF SELECTED CASES
(¢/kg)

Smelter category	Smelting configuration	Scenario	Baseline	SO_2	Fug.	Cost with controls	Refining cost	Transportation	Total cost
Greenfield									
High impurity concentrate			70.3	2.8	+ 1.5 =	74.6	23.1	4.4	102.1
Clean concentrate			33.5		+ 1.3 =	34.8	23.1	4.4	62.3
Expansion									
Clean concentrate	I	1b	32.0		+ 5.6 =	37.6	23.1	4.4	65.1
		5	18.9		+ 0.0 =	18.9	23.1	4.4	46.4
		6	22.9		+ 0.0 =	22.9	23.1	4.4	50.4
	II	7	30.2		+ 4.8 =	35.0	23.1	4.4	62.5
		11	42.4	16.3	+ 1.1 =	59.8	23.1	4.4	87.3
		15	67.1		+ 1.3 =	68.4	23.1	4.4	95.9
		16	22.0		+ 0.0 =	22.0	23.1	4.4	49.5
		17	25.2		+ 0.0 =	25.2	23.1	4.4	52.7
	III	18	14.9		2.1 =	17.0	23.1	4.4	44.5
		22	20.5		+ 0.0 =	20.5	23.1	4.4	48.0
	IV	23	60.6		+ 3.1 =	60.6	23.1	4.4	91.2
		24	17.7		+ 0.0 =	17.7	23.1	4.4	45.2
		25	18.8		+ 0.0 =	18.8	23.1	4.4	46.2
High impurity concentrate[a]	V	26	22.4		+ 0.0 =	22.4	23.1	4.4	49.9
	I	1a	32.0		+ 0.0 =	32.0	23.1	4.4	59.5
			Smelting						
Japanese			23.5				17.6	35.4	83.0[b]

[a]With exemption.

[b]76.5 plus 6.5 for profit.

conversion scenarios are feasible (5, 6, 16, 17, 22, 23, and 24). The high impurity concentrate is not shown because small changes in the relevant financial and cost parameters would not cause a change in the conclusions.

Even if the costs for a new greenfield smelter processing high impurity concentrates were more favorable, there are two additional issues that complicate an analysis of the decision to build a new greenfield smelter processing high impurity concentrates: (1) Do the Japanese have the capability and the willingness to accept more high impurity concentrates; and (2) what would be the source of supply of high impurity concentrates for a new greenfield smelter processing such concentrates. With respect to the first issue, the indicators are mixed. One indicator that suggests additional Japanese capability to accept high impurity concentrates is the two expansions mentioned earlier. Two indicators that suggest a lack of willingness for the Japanese to accept additional high impurity concentrates are: the forecast of moderate to low growth in the Japanese economy for the next few years, and the fact that the Japanese exchanged high impurity concentrates for clean concentrates with the Taiwanese.[87] [88]

With respect to the second issue, the source of high impurity concentrates, the answer is complex. An examination of this question several years ago concluded that the supply of such concentrates was tight and likely to remain so for some time.[89] A comprehensive examination of the two issues above would require an intensive effort that focused specifically on these issues; such an effort is outside the scope of this analysis.

9.3 SOCIOECONOMIC IMPACT ASSESSMENT

9.3.1 Executive Order 12291

The purpose of Section 9.3.1 is to address those tests of macroeconomic impact presented in Executive Order 12291, and, more generally, to assess any other significant macroeconomic impacts that may result from the revised NSPS. Executive Order 12291 stipulates as "major rules" those that are projected to have any of the following impacts:

- An annual effect on the economy of $100 million or more.
- A major increase in costs or prices for consumers; individual industries; Federal, State, or local government agencies; or geographic regions.
- Significant adverse effects on competition, employment, investment, productivity, innovation, or the ability of U.S.-based enterprises to compete with foreign-based enterprises in domestic or export markets.

The primary copper smelter industry is currently operating at a low capacity utilization rate in response to the depressed general economy. Starting from a low capacity utilization rate and given moderate to low growth prospects for the demand for copper over the next 5 years, the need for new sources appears minimal. If new sources are built in the next 5 years they are more likely to be built to replace existing smelters that are closed rather than to add capacity to meet an increase in demand. The number of existing smelters that may close by 1988 is estimated to range as high as six.[90] The closure of six smelters would have a severe impact on the industry. This occurrence would seem to be unlikely because as one or several smelters close, the lost capacity should enable the remaining smelters either to charge more for their services or to operate at a higher capacity utilization rate, and thus quite possibly to remain open.

A revised NSPS would only apply to new sources (new greenfield smelters or expansion at existing smelters), not to existing sources. As such, a revised NSPS will not cause closures. However, a revised NSPS may have an impact if it prevents new sources from opening.

If a new greenfield smelter processing high impurity concentrates is built and becomes subject to the revised NSPS, the control costs would add a maximum of $13,150,000 for SO_2 controls and $1,635,000 for fugitive controls, or a total of $14,785,000, as shown in Table 9-18. This total of $14,758,000 represents the highest cost option, I-B. If a new greenfield smelter processing clean concentrates is built and becomes subject to the revised NSPS, the costs for fugitive controls would add a maximum of $1,401,000 as shown earlier. If a revised NSPS prevented a new source from opening, the lost blister production would be 110,000 Mg/yr in the case of a greenfield smelter.

TABLE 9-24. NUMBER OF EMPLOYEES AT COMPANIES THAT OWN PRIMARY COPPER SMELTERS

Company	Employees	Source[a]
ASARCO, Inc.	12,700	Reference 91
Cities Service Company	18,900	Reference 92
Copper Range Company[b]	3,049	Reference 93
Inspiration Consolidation Copper Company	2,180	Reference 94
Kennecott Corporation[c]	35,000	Reference 95
Newmont Mining Corporation	12,400	Reference 96
Phelps Dodge Corporation	15,220	Reference 97

[a]Reference 91.

[b]Copper Range Company is a wholly owned subsidiary of the Louisiana Land and Exploration Company. Figures are for Louisiana Land and Exploration.

[c]Prior to merger with Sohio on March 12, 1981.

9.3.2 Regulatory Flexibility

The Regulatory Flexibility Act (RFA) of 1980 requires that differential impacts of Federal regulations upon small business be identified and analyzed. The RFA stipulates that an analysis is required if a substantial number of small businesses will experience significant impacts. Both measures must be met, substantial numbers of small businesses and significant impacts, to require an analysis. If either measure is not met then no analysis is required. The EPA definition of a substantial number of small businesses in an industry is 20 percent. The EPA definition of significant impact involves three tests, as follows: (1) prices for small entities rise 5 percent or more, assuming costs are not passed onto consumers; or (2) annualized investment costs for pollution control are greater than 20 percent of total capital spending; or (3) costs as a percentage of sales for small entities are 10 percent greater than costs as a percentage of sales for large entities.

The Small Business Administration (SBA) definition of a small business for SIC Code 3331, Primary smelting and refining of copper, is 1,000 employees. Table 9-24 shows recent employment levels for each of the seven companies that own primary copper smelters. All seven have more than 1,000 employees. Therefore, none of the seven companies meets the SBA definition of a small business and thus no regulatory flexibility analysis is required.

9.4 REFERENCES

1. United States International Trade Commission. Unalloyed Unwrought Copper. August 1978. p. A-12.
2. Atlantic Richfield Co. Form 10-K. December 31, 1980. p. 16.
3. ASARCO, Inc. Form 10-K. December 31, 1980. p. A2.
4. Cities Service Co. Annual Report 1980. p. 41.
5. The Louisiana Land Exploration Co. Form 10-K. December 31, 1980. p. 16.
6. Inspiration Consolidated Copper Company. Annual Report 1980. p. 2.

7. Kennecott Corp. Form 10-K. December 31, 1980. p. 4.

8. Newmont Mining Corp. Form 10-K. December 31, 1980. p. 3.

9. Phelps Dodge Corp. Form 10-K. December 31, 1980. p. 2, 4.

10. Copper Development Association, Inc. Annual Data 1980, Copper Supply and Consumption. p. 4.

11. Reference 10, p. 10.

12. Bureau of Mines. Copper Mineral Commodity Profiles. September 1979. p. 5.

13. AMAX. 1979 Annual Report. p. 12.

14. AMAX. 1980 Annual Report. p. 12.

15. ARCO. Form 10-K. 1980. p. 16.

16. Phelps Dodge Corp. Form 10-K. 1980. p. 5.

17. Newmont Mining Corp. Form 10-K. 1980. p. 3.

18. Reference 10, p. 14.

19. Reference 10, p. 6.

20. Bureau of Mines, U.S. Department of the Interior. Bureau of Mines Yearbook. 1975. p. 3.

21. Bureau of Mines. Bureau of Mines Minerals Yearbook. 1977 (Vol. I). p. 331.

22. Phelps Dodge Corp.. Form 10-K. December 31, 1976. p. 6.

23. Newmont Mining Corp. Form 10-K. December 31, 1976. p. 4.

24. Kennecott Copper Corp. Form 10-K. December 31, 1976. pp. 3-5.

25. American Bureau of Metal Statistics. New York, New York. Non-Ferrous Metals Data Book. 1977.

26. Inspiration Consolidated Copper Co. Annual Report. 1976. p. 5.

27. EPA and Smelter Operators Square Off at Arizona Hearings on SO_2 Issue. Engineering and Mining Journal. 146:18. February 1976.

28. Cyprus Mines Corp. Form 10-K. December 31, 1976. p. 5-7.

29. ASARCO, Inc. Form 10-K. December 31, 1976. p. A3.

30. Cities Service Co., Form 10-K. December 31, 1976. pp. 12-13.

31. Copper Range Co. Form 10-K. December 31, 1976. p. 3.

32. UV Industries, Inc. Form 10-K. December 31, 1976. p. 5.

33. Reference 12, p. 13.

34. Rosenkranz, R. D., R. L. Davidoff, and J. F. Lemons, Jr. Copper Availability--Domestic: A Minerals Availability System Appraisal. U.S. Bureau of Mines. 1979. p. 22.

35. U.S. Bureau of Mines. Cost of Producing Copper From Chalcopyrite Concentrate as Related to SO_2 Emission Abatement. 1974. p. 12.

36. U.S. Environmental Protection Agency. Draft of Standards Support and Environmental Impact Statement, Volume 1: Proposed National Emission Standards for Arsenic Emissions From Primary Copper Smelters. June 1978. p. 7-18.

37. Cleaver, George. Merrill, Lynch, Pierce, Fenner, and Smith, Inc. June 1977. p. 9-10.

38. Weiss, Moshe. The Impact of Environmental Control Expenditures on the U.S. Copper, Lead, and Zinc Mining and Smelting Industry. National Economic Research Associates, Inc. January 1978. Chart B-3.

39. Reference 36, p. 7-19.

40. Reference 37, p. 5.

41. Kovisars, Leons. Copper Production Costs vs. Required Prices. Presented at SME-AIME Fall Meeting and Exhibit, Tucson, Arizona. October 17-19, 1979. p. 2.

42. Reference 35, p. 10.

43. Schroeder, H. J. Bureau of Mines Commodity Report on Copper. June 1977. pp. 16, 17.

44. Copper Development Association. Annual Data. 1981. p. 6.

45. Commodities Research Unit, Ltd. Trends in U.S. Productivity, Copper Studies. New York. January 15, 1980. pp. 7,8.

46. U.S. Bureau of Mines. Mineral Industry Survey, Copper Survey, Copper Industry Annual Supplement.

47. U.S. Department of Commerce, U.S. Industrial Outlook. Copper, Quarterly Report. January 1981. p. 208.

48. Reference 44, p. 23.

49. Reference 44, p. 31.

50. Commodities Research Unit, Ltd. Copper's Hope: Electric Vehicles, Copper Studies. New York. March 30, 1979. p. 5.

51. Commodities Research Unit, Ltd. Copper in Military Uses, Copper Studies. New York. February 15, 1980. p. 1.

52. Metal Statistics. 1981. New York, Fairchild Publications. p. 71.

53. Commodities Research Unit, Ltd. CRU Metal Monitor Copper. April 1980. p. 3.

54. Commodities Research Unit, Ltd. The Capital Cost Picture, Copper Studies. New York. August 18, 1975.

55. Reference 34, p. 13.

56. Reference 34, p. 15.

57. Commodities Research Unit, Ltd. CS Survey: U.S. Expansion Potential, Copper Studies. New York. March 30, 1979. p. 1.

58. Arthur D. Little, Inc. Economic Impact of Environmental Regulations on the United States Copper Industry. U.S. Environmental Protection Agency. January 1978. p. V-4.

59. Reference 58, p. V-8.

60. Reference 12, p. 6.

61. Lesemann, Robert. Record Demand and Speculation Drive Copper Over $1.00 Mark. Engineering and Mining Journal. March 1980. p. 82.

62. Bureau of Mines. Mineral Commodity Summaries - 1981. January 1981. p. 40.

63. Reference 3, p. 8.

64. Fisher, F., P. Cootner, and M. Baily. An Economic Analysis of the World Copper Industry. Bell Journal of Economics and Management Science. 3:577. Autumn 1972.

65. Charles River Associates, Inc. Economic Analysis of the Copper Industry. In: The World Copper Industry, Raymond F. Mikesell. March 1970. p. 177.

66. U.S. Department of the Interior, Bureau of Mines. An Economic Appraisal of the Supply of Copper from Primary Domestic Sources. Bureau of Mines Information Circular No. 8598. Washington, DC. 1973. p. 36.

67. Mikesell, Raymond F. The World Copper Industry: Structure and Economic Analysis. Baltimore, MD, John Hopkins University Press, 1979. pp. 175-176.

68. Reference 58, p. VII-28.

69. Reference 65, p. 280.

70. Reference 64, p. 587.

71. Virginia Polytechnic Institute and State University. A Disaggregated Engineering Supply Model of the U.S. Copper Industry Operating in an Aggregated World Econometric Supply/Demand System. U.S. Bureau of Mines Contract J0188158. July 1980. Appendix B, p. B31.

72. Nippon Mining makes Agreement with Anaconda. Japan Metal Journal (Tokyo). December 22, 1980. p. 1.

73. Anaconda Will Ship Copper Concentrates to Seven Japanese Copper Producers. Metals Week. December 22, 1980. p. 2.

74. Japan Metal Journal (Tokyo), August 7, 1978, p. 1; April 16, 1979, p. 2; August 6, 1979, p. 1; July 21, 1980, p. 1.

75. Reiber, Michael. Smelter Emission Controls: The Impact On Mining and the Market for Acid. Arizona Mining and Mineral Resources Research Institute, Tucson, Arizona. Office of Surface Mining. March 1982. pp. 3-59, 3-60, 5-14, 5-15.

76. Returning Shipments of Refined Copper to Anaconda will be Increased Fairly. Japan Metal Journal (Tokyo). March 22, 1982. p. 1.

77. MITI's Revised Supply-Demand Prospects for FY 1980. Japan Metal Journal (Tokyo). November 24, 1980. p. 1.

78. Copper Imports on Preferential Tariff. Japan Metal Journal (Tokyo). December 8, 1980. p. 3.

79. Affidavit of Robert J. Lesemann, Commodities Research Unit/CRI and former editor-in-chief of Metals Week, to the Federal Trade Commission. September 27, 1979. FTC Docket Number 9089.

80. Brass Rod Production Cartel Starts. Japan Metal Journal (Tokyo). July 6, 1981. p. 1.

81. Smelter Pollution Abatement: How the Japanese Do It. Engineering and Mining Journal. May 1981. p 72.

82. Reference 75, p. 5-10.

83. Custom Copper Concentrates. Engineering and Mining Journal. May 1982. p. 73.

84. Everest Consulting Associates, Inc., and CRU Consultants, Inc. The International Competitiveness of the U.S. Nonferrous Smelting Industry and the Clean Air Act. Princeton, NJ. April 1982. p. 9-9.

85. Reference 35, pp. 1, 14, 19, 22, 25, 30, 34, 37, 42, 52, 57, 62, and 71.

86. Lewis, F. Milton, and Roshan B. Bhappu. Copper Production Costs Update. Mountain States Research and Development, Tuscon, Arizona. October 1979. p. 4.

87. Demand Prospects of Copper Electric Wires. Japan Metal Journal (Tokyo). July 5, 1982. p. 3.

88. NM Agrees with TMM on Exchange of Concentrates. Japan Metal Journal (Tokyo). October 19, 1981. p. 7.

89. CS Survey "Dirty Concentrates." Copper Studies, New York. August 31, 1979. pp. 1-6.

90. Reference 82, pp. 1-11.

91. Reference 3, p. A7.

92. Cities Service Company. Form 10-K. 1980. p. 6.

93. Copper Range Company. Form 10-K. 1980. p. 22.

94. Inspiration Consolidated Copper Company. Form 10-K. 1980. p. 2.

95. Reference 7, p. 10.

96. Reference 8, p. 9.

97. Reference 9, p. 1.

TECHNICAL REPORT DATA
(Please read Instructions on the reverse before completing)

1. REPORT NO. EPA-450/3-83-018a	2.	3. RECIPIENT'S ACCESSION NO.
4. TITLE AND SUBTITLE Review of New Source Performance Standards for Primary Copper Smelters		5. REPORT DATE March 1984
		6. PERFORMING ORGANIZATION CODE
7. AUTHOR(S)		8. PERFORMING ORGANIZATION REPORT NO.
9. PERFORMING ORGANIZATION NAME AND ADDRESS Office of Air Quality Planning and Standards U.S. Environmental Protection Agency Research Triangle Park, North Carolina 27711		10. PROGRAM ELEMENT NO.
		11. CONTRACT/GRANT NO. 68-02-3056
12. SPONSORING AGENCY NAME AND ADDRESS Office of Air Quality Planning and Standards Office of Air, Noise, and Radiation U.S. Environmental Protection Agency Research Triangle Park, North Carolina 27711		13. TYPE OF REPORT AND PERIOD COVERED Draft
		14. SPONSORING AGENCY CODE EPA/200/04
15. SUPPLEMENTARY NOTES		

16. ABSTRACT

Standards of performance for the control of emissions from primary copper smelters were promulgated in 1976. Developments since promulgation necessitated that the following be included in the periodic review of the standards: (1) reexamination of the current exemption for reverberatory furnaces processing high-impurity materials, (2) assessment of the feasibility of controlling particulate matter emissions from reverberatory furnaces processing high-impurity materials, (3) reevaluation of the impact of the current standard on the ability of existing smelters to expand production, and (4) assessment of the technical and economic feasibility of controlling fugitive emissions at primary copper smelters. The results of the review indicated that no changes should be made to the existing standard. This document contains background information and environmental and economic assessments considered in arriving at this conclusion.

This report is published in two volumes. Volume 1, EPA 450/3-83-018a, contains Chapters 1 through 9. Volume 2, EPA 450/3-83-018b, contains the Appendixes.

17. KEY WORDS AND DOCUMENT ANALYSIS

a. DESCRIPTORS	b. IDENTIFIERS/OPEN ENDED TERMS	c. COSATI Field/Group
Air pollution Pollution control Standards of performance Primary copper smelters Sulfur oxides Particulate matter	Air Pollution Control	13B

18. DISTRIBUTION STATEMENT Unlimited	19. SECURITY CLASS (This Report) Unclassified	21. NO. OF PAGES 579
	20. SECURITY CLASS (This page) Unclassified	22. PRICE

EPA Form 2220-1 (Rev. 4-77) PREVIOUS EDITION IS OBSOLETE

DATE DUE

[illegible] (OPL-18)
[illegible] Street, Room 1670
[illegible] 60604