United States
Environmental Protection
Agency

Office of Water
Regulations and Standards (WH-553)
Washington DC 20460

April 1982
EPA-440/4-85-009

Water

EPA

An Exposure and Risk Assessment for Dichloroethanes

DISCLAIMER

This is a contractor's final report, which has been reviewed by the Monitoring and Data Support Division, U.S. EPA. The contents do not necessarily reflect the views and policies of the U.S. Environmental Protection Agency, nor does mention of trade names or commercial products constitute endorsement or recommendation for use.

50272-101

REPORT DOCUMENTATION PAGE	1. REPORT NO. EPA-440/4-85-009	2.	3. Recipient's Accession No.

4. Title and Subtitle

An Exposure and Risk Assessment for Dichloroethanes
1,1-Dichloroethane 1,2-Dichloroethane

5. Report Date Final Revision April 1982

6.

7. Author(s) Perwak, J.; Byrne, M.; Goyer, M.; Lyman, W.; Nelken, L.; Scow, K.; Wood, M. (ADL) Moss, K. (Acurex Corporation)

8. Performing Organization Rept. No.

9. Performing Organization Name and Address

Arthur D. Little, Inc.
20 Acorn Park
Cambridge, MA 02140

Acurex Corporation
485 Clyde Avenue
Mt. View, CA 94042

10. Project/Task/Work Unit No.

11. Contract(C) or Grant(G) No.

(C) C-68-01-5949
(G) C-68-01-6017

12. Sponsoring Organization Name and Address

Monitoring and Data Support Division
Office of Water Regulations and Standards
U.S. Environmental Protection Agency
Washington, D.C. 20460

13. Type of Report & Period Covered

Final

14.

15. Supplementary Notes

Extensive Bibliographies

16. Abstract (Limit: 200 words)

This report assesses the risk of exposure to 1,1-dichloroethane and 1,2-dichloroethane. This study is part of a program to identify the sources of and evaluate exposure to 129 priority pollutants. The analysis is based on available information from government, industry, and technical publications assembled in April of 1981.

The assessment includes an identification of releases to the environment during production, use, or disposal of the substance. In addition, the fate of dichloroethanes in the environment is considered; ambient levels to which various populations of humans and aquatic life are exposed are reported. Exposure levels are estimated and available data on toxicity are presented and interpreted. Information concerning all of these topics is combined in an assessment of the risks of exposure to dichloroethanes for various subpopulations.

17. Document Analysis a. Descriptors

Exposure	Effluents	Dichloroethanes
Risk	Waste Disposal	1,1-Dichloroethane
Water Pollution	Food Contamination	1,2-Dichloroethane
Air Pollution	Toxic Diseases	

b. Identifiers/Open-Ended Terms

Pollutant Pathways
Risk Assessment

U.S. Environmental Protection Agency
Region III Information Resource
Center (3PM52)
841 Chestnut Street
Philadelphia, PA 19107

c. COSATI Field/Group 06F 06T

18. Availability Statement	19. Security Class (This Report)	21. No. of Pages
Release to Public	Unclassified	194
	20. Security Class (This Page)	22. Price
	Unclassified	$17.50

EPA-440/4-85-009
April 1981
(Revised April 1982)

AN EXPOSURE AND RISK ASSESSMENT

DICHLOROETHANES

1,1-Dichloroethane
1,2-Dichloroethane

by

Joanne Perwak
Melanie Byrne, Muriel Goyer,
Warren Lyman, Leslie Nelken,
Kate Scow, and Melba Wood
Arthur D. Little, Inc.

U.S. EPA Contract No. 68-01-5949

Kenneth Moss
Acurex Corporation

U.S. EPA Contract No. 68-01-6017

Charles Delos
Project Manager
U.S. Environmental Protection Agency

Monitoring and Data Support Division (WH-553)
Office of Water Regulations and Standards
Washington, D.C. 20460

OFFICE OF WATER REGULATIONS AND STANDARDS
OFFICE OF WATER
U.S. ENVIRONMENTAL PROTECTION AGENCY
WASHINGTON, D.C. 20460

FOREWORD

Effective regulatory action for toxic chemicals requires an understanding of the human and environmental risks associated with the manufacture, use, and disposal of the chemical. Assessment of risk requires a scientific judgment about the probability of harm to the environment resulting from known or potential environmental concentrations. The risk assessment process integrates health effects data (e.g., carcinogenicity, teratogenicity) with information on exposure. The components of exposure include an evaluation of the sources of the chemical, exposure pathways, ambient levels, and an identification of exposed populations including humans and aquatic life.

This assessment was performed as part of a program to determine the environmental risks associated with current use and disposal patterns for 65 chemicals and classes of chemicals (expanded to 129 "priority pollutants") named in the 1977 Clean Water Act. It includes an assessment of risk for humans and aquatic life and is intended to serve as a technical basis for developing the most appropriate and effective strategy for mitigating these risks.

This document is a contractors' final report. It has been extensively reviewed by the individual contractors and by the EPA at several stages of completion. Each chapter of the draft was reviewed by members of the authoring contractor's senior technical staff (e.g., toxicologists, environmental scientists) who had not previously been directly involved in the work. These individuals were selected by management to be the technical peers of the chapter authors. The chapters were comprehensively checked for uniformity in quality and content by the contractor's editorial team, which also was responsible for the production of the final report. The contractor's senior project management subsequently reviewed the final report in its entirety.

At EPA a senior staff member was responsible for guiding the contractors, reviewing the manuscripts, and soliciting comments, where appropriate, from related programs within EPA (e.g., Office of Toxic Substances, Research and Development, Air Programs, Solid and Hazardous Waste, etc.). A complete draft was summarized by the assigned EPA staff member and reviewed for technical and policy implications with the Office Director (formerly the Deputy Assistant Administrator) of Water Regulations and Standards. Subsequent revisions were included in the final report.

Michael W. Slimak, Chief
Exposure Assessment Section
Monitoring & Data Support Division (WH-553)
Office of Water Regulations and Standards

TABLE OF CONTENTS

	Page
LIST OF FIGURES	v
LIST OF TABLES	vi
1.0 TECHNICAL SUMMARY	1-1
1.1 Risk Considerations	1-1
1.1.1 Human -- 1,2-Dichloroethane	1-1
1.1.2 Human -- 1,1-Dichloroethane	1-1
1.1.3 Biota	1-2
1.2 Materials Balance	1-2
1.3 Fate and Distribution in the Environment	1-3
2.0 INTRODUCTION	2-1
3.0 MATERIALS BALANCE	3-1
3.1 Introduction	3-1
3.2 Manufacture of 1,2-Dichloroethane	3-1
3.3 Manufacture of 1,1-Dichloroethane	3-9
3.4 Uses of 1,2-Dichloroethane	3-9
3.5 Use and Environmental Release of 1,1-Dichloroethane	3-10
3.6 Municipal Disposal of 1,1- and 1,2-Dichloroethane	3-10
4.0 FATE AND DISTRIBUTION OF DICHLOROETHANE IN THE ENVIRONMENT	4-1
4.1 Introduction	4-1
4.2 Distribution of Dichloroethanes in the Environment	4-1
4.2.1 Waters and Sediment	4-1
4.2.2 Air	4-5
4.2.3 Soil	4-5
4.2.4 Biota	4-8
4.3 Environmental Pathways and Fate	4-8
4.3.1 Physicochemical Properties	4-8
4.3.2 Major Environmental Pathways	4-8
4.3.2.1 Behavior in Air	4-14
4.3.2.2 Behavior in Water	4-15
4.3.2.3 Behavior in Soils and Sediments	4-22
4.3.3 Fate of Dichloroethanes Discharged from Major Sources	4-25
4.3.3.1 Air Emissions from Major Petrochemical Plants	4-25
4.3.3.2 Air Emissions from 1,2-Dichloroethane in Automobile Gasoline	4-28

TABLE OF CONTENTS (Continued)

	Page
4.3.3.3 Water Discharges from Petrochemical Plants	4-28
4.3.3.4 Land Discharges from Petrochemical Plants	4-32
4.3.3.5 Fate of 1,2-Dichloroethane Discharged to Sanitary Sewers	4-32
4.4. Summary	4-33
5.0 EFFECTS AND EXPOSURE	5-1
5.1 Human Toxicity	5-1
5.1.1 1,2-Dichloroethane	5-1
5.1.1.1 Metabolism and Bioaccumulation	5-1
5.1.1.2 Human and Animal Studies	5-3
5.1.1.3 Overview	5-11
5.1.2 1,1-Dichloroethane	5-13
5.1.2.1 Introduction	5-13
5.1.2.2 Metabolism	5-13
5.1.2.3 Human and Animal Studies	5-14
5.1.2.4 Overview	5-15
5.2 Human Exposure	5-15
5.2.1 Introduction	5-15
5.2.2 Ingestion	5-15
5.2.2.1 Drinking Water	5-15
5.2.2.2 Food	5-22
5.2.3 Inhalation	5-24
5.2.3.1 Occupational	5-24
5.2.3.2 Ambient Air	5-24
5.2.3.3 Indoor Air	5-25
5.2.3.4 Near Sources	5-25
5.2.4 Dermal Exposure	5-27
5.2.5 Exposures Resulting From 1,2-Dichloroethane as a Contaminant in Other Products	5-27
5.2.6 Overview	5-30
6.0 EFFECTS AND EXPOSURE -- AQUATIC BIOTA	6-1
6.1 Effects on Biota	6-1
6.1.1 Introduction	6-1
6.1.2 Freshwater Organisms	6-1
6.1.3 Marine Organisms	6-1
6.1.4 Factors Affecting Toxicity of Dichloroethanes	6-2
6.1.5 Conclusions	6-2
6.2 Exposure of Biota	6-3
6.2.1 Introduction	6-3

TABLE OF CONTENTS (Continued)

		Page
6.2.2	Monitoring Data	6-3
6.2.3	Ingestion	6-4
6.2.4	Fish Kills	6-4
6.2.5	Conclusions	6-4
7.0	RISK CONSIDERATIONS	7-1
7.1	Introduction	7-1
7.2	Humans	7-1
7.2.1	Health Effects	7-1
7.2.2	Exposure	7-2
7.2.3	Human Risk Evaluation	7-7
7.2.3.1	Carcinogenicity	7-7
7.2.3.2	Risk to Exposed Populations	7-13
7.3	Biota	7-14
APPENDIX A	Manufacture of 1,2-Dichloroethane	A-1
APPENDIX B	Manufacture of 1,1-Dichloroethane	B-1
APPENDIX C	Uses of 1,2-Dichloroethane	C-1
APPENDIX D	Municipal Disposal of 1,1- and 1,2-Dichloroethane	D-1

LIST OF FIGURES

Figure No.		Page
3-1	1,2-Dichloroethane Materials Balance Flow Sheet	3-2
3-2	1,1-Dichloroethane Materials Balance Flow Sheet	3-3
4-1	Major Pathways of Dichloroethanes in the Environment	4-13
4-2	Percent Volatilization of 1,1-Dichloroethane as a Function of Distance Downstream From Source	4-24
A-1	Locations of 1,2-Dichloroethane Facilities	A-3
A-2	C_2 Chlorinated Hydrocarbon Manufacture	A-6
A-3	Manufacture of 1,2-Dichloroethane Via Direct Chlorination	A-10
A-4	Manufacture of 1,2-Dichloroethane Via Oxy-chlorination	A-11
A-5	The Balanced Process for Vinyl Chloride Manufacture	A-16
C-1	Flow Diagram for 1,1,1-Trichloroethane from Vinyl Chloride	C-4
C-2	Ethylenediamine Manufacture	C-7
C-3	Flow Diagram for Perchloroethylene and Trichloro-ethylene by Chlorination	C-11
C-4	Flow Diagram for Perchloroethylene and Trichloro-ethylene by Oxy-chlorination	C-13
C-5	Manufacture of Vinylidene Chloride from 1,1,2-Trichloroethane	C-15

LIST OF TABLES

Table No.		Page
3-1	Production of 1,2-Dichloroethane and Related C_2 Products, by Facilities and Locations	3-4
3-2	Materials Balance of 1,2-Dichloroethane in 1978	3-6, 3-7, 3-8
3-3	Materials Balance of 1,1-Dichloroethane in 1978	3-11
4-1	Ambient Water Concentrations for Dichloroethanes	4-2
4-2	Concentration of 1,2-Dichloroethane in Surface Waters From Industrial Areas	4-3, 4-4
4-3	Concentrations of 1,1-Dichloroethane in Sediments	4-6
4-4	Concentrations of Dichloroethanes in Ambient Air at Four Sites in the State of New Jersey, April to November, 1978	4-6
4-5	Dichloroethane Levels in Ambient Air of Industrial Areas	4-7
4-6	Concentrations of Dichloroethanes in Fish Tissue	4-9
4-7	Physicochemical Properties of 1,2-Dichloroethane	4-10, 4-11
4-8	Physicochemical Properties of 1,1-Dichloroethane	4-12
4-9	Tropospheric Half-Life of Dichloroethanes	4-16
4-10	Biodegradability of Dichloroethanes	4-18
4-11	Chemical Properties and Rate Constants Used as Input to EXAMS Model	4-20
4-12	Results of EXAMS Model Runs	4-21
4-13	Volatilization t 1/2 for Dichloroethanes in EXAMS System	4-23
4-14	1,2-Dichloroethane Residues in Plants	4-23
4-15	Meteorological Conditions Near Major Petrochemical Plants Producing Dichloroethanes	4-26

LIST OF TABLES (Continued)

Table No.		Page
4-16	Estimated One-Hour Average Downwind Atmospheric Concentrations of 1,2-Dichloroethane	4-29
4-17	Comparison of 1,2-Dichloroethane Monitoring and Modeling Atmospheric Concentrations	4-30
4-18	Rough Dispersion Modeling Results for 1,2-Dichloroethane Emissions for Gasoline Service Stations	4-31
5-1	Incidence of Primary Tumors at Specific Sites in Male and Female Osborne-Mendel Rats Administered 1,2-Dichloroethane by Gavage	5-4
5-2	Incidence of Primary Tumors at Specific Sites in Male and Female B6C3F1 Mice Administered 1,2-Dichloroethane by Gavage	5-5
5-3	Adverse Effects of 1,2-Dichloroethane	5-12
5-4	Adverse Effects of 1,1-Dichloroethane on Mammals	5-16
5-5	Dichloroethanes in Drinking Water -- Federal Data	5-17
5-6	Occurrence of Dichloroethanes in Groundwater -- State Data	5-19
5-7	Groundwater Data Reportedly Available From State Agencies for 1,2-Dichloroethane	5-20
5-8	Groundwater Data Reportedly Available From State Agencies for 1,1-Dichloroethane	5-21
5-9	1,2-Dichloroethane Residues Found in Spice Oleoresins From Three Manufacturers	5-23
5-10	Estimated Human Population Exposures to Atmospheric 1,2-Dichloroethane Emitted by Producers	5-26
5-11	Dermal Exposures to 1,2-Dichloroethane Resulting From Spills	5-28
5-12	Concentration of 1,2-Dichloroethane as a Contaminant in Other Compounds	5-29
5-13	Human Exposure to 1,2-Dichloroethane	5-31, 5-32

LIST OF TABLES (Continued)

Table No.		Page
6-1	Maximum Observed Dichloroethane Concentration in Minor U.S. River Basins (1974-1978)	6-5
7-1	Adverse Effects of 1,2-Dichloroethane	7-3
7-2	Adverse Effects of 1,1-Dichloroethane on Mammals	7-4
7-3	Estimated Human Exposure to 1,2-Dichloroethane	7-5, 7-6
7-4	Carcinogenicity of 1,2-Dichloroethane	7-9
7-5	Estimated Number of Excess Lifetime Cancers Per 1,000,000 Population Exposed to Different Levels of 1,2-Dichloroethane Based on Four Extrapolation Models	7-12
7-6	Estimated Ranges of Carcinogenic Risk to Humans Due to 1,2-Dichloroethane For Various Routes of Exposure	
A-1	1,2-Dichloroethane Capacity, 1978	A-2
A-2	1,2-Dichloroethane Consumption, 1978	A-4
A-3	Production of 1,2-Dichloroethane and Related C_2 Products, by Facilities and Locations	A-7
A-4	1,2-Dichloroethane Summary Materials Balance	A-8
A-5	Composition of Crude 1,2-Dichloroethane	A-13
A-6	Vinyl Chloride Producers, Locations, and 1978 Capacity	A-14
A-7	Composition of Oxy-chlorination Wastewater	A-19
A-8	Composition of Vinyl Chloride Tars	A-20
A-9	Composition of Vinyl Chloride Heavy Ends	A-21
B-1	Materials Balance of 1,1-Dichloroethane in 1978	B-2
C-1	1,2-Dichloroethane Materials Balance: Uses, kkg/yr	C-2
C-2	Production Capacity for 1,1,1-Trichloroethane	C-3

LIST OF TABLES (Continued)

Table No.		Page
C-3	Production Capacity for Ethylenediamine	C-6
C-4	Trichloroethylene and Tetrachloroethylene Production	C-9
C-5	Vinylidene Chloride Producers, Locations, and Capacity	C-16
C-6	EDC Emissions from Use as Lead Scavenger 1978	C-20
C-7	Minor Uses of 1,2-Dichloroethane	C-22
C-8	1,2-Dichloroethane Residues, μg/g Found in Spice Oleoresins from Three Manufacturers	C-24
C-9	Wastewater Loading of Dichloroethanes in the Pharmaceutical Industry	C-25
C-10	Pesticide Products Containing 1,2-Dichloroethane	C-27, C-32
D-1	Dichloroethane Materials Balance: Municipal POTWs and Refuse (kkg/yr)	D-2

ACKNOWLEDGEMENTS

The Arthur D. Little, Inc., task manager for this study was Joanne Perwak. Major contributors to this report were Melanie Byrne (Biological Effects), Leslie Nelken (Environmental Fate), Warren Lyman (Environmental Fate), Kate Scow (Biological Fate), Muriel Goyer (Human Effects), and Melba Wood (Monitoring Data). In addition, Joseph Fiksel was responsible for the risk extrapolation and Anne Littlefield, Nina Green and Irene Rickabaugh were responsible for editing and report production.

The materials balance for the dichloroethanes (Chapter 3.0 and Appendices A-D) was provided by Acurex Corporation, produced under Contract 68-01-6017 to the Monitoring and Data Support Division (MDSD), Office of Water Regulations and Standards (OWRS), U.S. EPA. Kenneth Moss was the task manager for Acurex Corporation. Patricia Leslie was responsible for report production on behalf of Acurex Corporation.

Charles Delos, MDSD, was the project manager at EPA.

1.0 TECHNICAL SUMMARY

The Monitoring and Data Support Division, Office of Water Regulations and Standards, the U.S. Environmental Protection Agency, is conducting an ongoing program to identify the sources of, and evaluate the exposure to, 129 priority pollutants. This report assesses the exposure to and risk associated with dichloroethanes.

1.1 RISK CONSIDERATIONS

1.1.1 Human -- 1,2-Dichloroethane

The compound 1,2-dichloroethane has been shown to be carcinogenic in rats and mice when administered by gavage. However, both rats and mice exposed to equivalent doses (as gavage) via inhalation showed no increased incidence of malignant tumors. This disparity in results remains to be resolved; however, it may be due to a difference in strain sensitivity, or the production of carcinogenic metabolites of 1,2-dichloroethane when administered by gavage that would not occur upon inhalation.

The isomer has been identified as an effective bacterial mutagen, although no teratogenic or reproductive effects have been observed in animals as a result of inhalation exposure. Chronic effects associated with exposure to 40-400 mg/m^3 have included CNS depression, GI upset, and kidney and liver damage.

Most persons in the U.S. ingest less than 7 μg/day 1,2-dichloroethane in food and drinking water. Water supplies are generally found to contain less than 1 μg/l of this compound, and little information is available on levels in food. If exposure is assumed at 7 μg/day to 187 million persons, an estimated 19-1047 excess lifetime cancers could occur in the exposed populations, depending on the risk extrapolation models used.

If one assumes that persons residing in industrialized areas receive about 100 μg/day and that 1,2-dichloroethane is carcinogenic via the inhalation route (the latter assumption is unsupported by data), then this exposure could result in a maximum estimated risk of 13-80 excess lifetime cancers/million population.

The subpopulations identified as being exposed to highly contaminated groundwater, residing in highly industrialized areas, or residing in the immediate vicinity of a production facility, may experience 400-1000 maximum excess lifetime cancers/million population.

The carcinogenic risks associated with major routes of exposure to 1,2-dichloroethane were estimated, using a range of risk based on several dose-response extrapolation models. There is considerable controversy

over the most appropriate model for performing such extrapolations. Moreover, additional uncertainty is introduced into the risk estimates by the choice of a particular set of laboratory data, by the conversion techniques used to estimate human equivalent doses, and by possible differences in susceptibility between humans and laboratory species. Due to the use of a number of conservative assumptions in the risk calculations, the estimated risks most likely overestimate the actual risk to humans.

1.1.2 Human -- 1,1-Dichloroethane

Little is known regarding the toxicity of 1,1-dichloroethane. Carcinogenicity tests have been inconclusive due to poor survival. No information is available regarding mutagenicity. Fetotoxic effects have been observed in rats upon inhalation of high levels (24,300 mg/m^3). Chronic toxic effects appear to be similar to those observed for 1,2-dichloroethane.

Similarly, exposure to 1,1-dichloroethane is largely unquantified. Surface water contamination appears to be relatively rare, although as for 1,2-dichloroethane, high exposures have occurred as a result of contaminated groundwater. Inhalation exposures may occur in urban areas.

Due to the lack of both effects and exposure data, the risks of 1,1-dichloroethane cannot be evaluated. A potential risk certainly exists, however, due to the high concentrations reported in groundwater in some locations.

1.1.3 Biota

The monitoring data indicate that levels of 1,1- and 1,2-dichloroethane are much lower than the reported effect levels, and are almost always lower than 10 μg/l. Thus, although the effects and exposure data are limited, it does not appear that aquatic organisms are at risk to dichloroethanes.

1.2 MATERIALS BALANCE

The compound 1,2-dichloroethane is the highest volume chlorinated organic compound manufactured in the United States. Production of 1,2-dichloroethane in 1978 was approximately 5.9×10^6 kkg, with the production facilities located primarily in the Gulf Coast area. About 80% of 1,2-dichloroethane was used in the production of vinyl chloride monomer; about 5% was exported, and the remaining 15% was used in the production of 1,1,1-trichloroethane, ethylenediamine, tetrachloroethylene, trichloroethylene, vinylidene chloride, and as a lead scavenger. Minor uses account for less than 1% of production, including polysulfide manufacture; paint; coating; adhesive solvent; extraction solvent; cleaning solvent; grain fumigant; diluent in pesticides and herbicides; and film manufacture.

Of the identified releases to the environment, it is estimated that 94% goes to the atmosphere (28,000 kkg/yr). About 85% of this amount is attributed to production facilities, including vinyl chloride production, in the western Gulf area. An additional 2% is attributed to the production of other chemicals, and about 3% (700 kkg) to the use of 1,2-dichloroethane as a lead scavenger. While the minor uses account for a small portion of production, releases account for about 15% of the atmospheric releases, although these are more widely dispersed than those from production facilities.

Releases of 1,2-dichloroethane to the aquatic environment are thought to be low, < 1% of the total releases, or about 190 kkg. About 34% of these releases are attributed to trichloroethylene and tetrachloroethylene production. An additional 53% is thought to be released from its use as a cleaning solvent. The remainder is attributed to miscellaneous sources, although releases to water are not well quantified. Releases from production facilities appear to be less than 1 kkg, a very small amount considering the amounts of 1,2-dichloroethane produced.

It is estimated that the land receives about 5% of the total releases, or about 1600 kkg. About 73% is a result of 1,2-dichloroethane and vinyl chloride production. One percent is attributed to ethyleneamine production. Again, the minor uses can account for significant portions of releases. The use of 1,2-dichloroethane as a cleaning solvent may result in 15% or 240 kkg of the releases to land, while its use in pesticide formulation accounts for about 11% of the total estimated releases to the compartment.

In contrast to 1,2-dichloroethane, commercial production of 1,1-dichloroethane is as an unisolated intermediate during the manufacture of 1,1,1-trichloroethane. However, small amounts (10 kkg) are produced and sold by specialty and laboratory chemical firms. It is also produced inadvertently in the production of 1,2-dichloroethane.

Atmospheric releases of 1,1-dichloroethane (1200 kg) represent about 99% of identified releases. About 52% of atmospheric releases are attributed to the production of 1,1,1-trichloroethane, and about 35% to the production of 1,2-dichloroethane. The remainder of the atmospheric releases is attributed to POTWs and its use as a cleaning solvent.

The identified aquatic releases (2 kkg) represent less than 1% of the environmental releases. The sources include solvent use, and POTWs. Both are expected to be widely dispersed.

The only identified sources of 1,1-dichloroethane to the land are POTWs and solvent use, which released about 6 kkg in 1978, or about 1% of the total environmental releases.

1.3 FATE AND DISTRIBUTION IN THE ENVIRONMENT

The releases of dichloroethanes considered in conjunction with the compounds' probable fate pathways are generally reflected in the monitoring data.

Releases to aquatic systems are low compared to environmental releases to air or land. In addition, volatilization from surface waters is expected to be the predominant loss mechanism. Laboratory results suggest a half-life for volatilization of 30 minutes for 1,2-dichloroethanes, although the use of the EXAMS model predicted a half-life of 35 hours in river water. Similar results were obtained for 1,1-dichloroethanes. Thus it is possible that released dichloroethanes may be carried a considerable distance downstream, although the concentrations may be considerably reduced due to dilution.

Where these compounds have been monitored, levels of both 1,2- and 1,1-dichloroethane in surface waters are almost always less than the detection limit, generally 10 μg/l. However, a few high values have been reported, with maximums of 230 μg/l and 1900 μg/l, respectively. These levels appear to represent temporary situations.

Large amounts of dichloroethanes, especially the 1,2-isomer, are released to the atmosphere in the vicinity of production facilities. Although photochemical degradation is generally thought to be the predominant loss pathway, it is probably of less importance in the Gulf Coast area due to the high percentage of cloudy days. Atmospheric losses due to washout could occur in this area due to frequent and heavy rains, although some may be re-volatilized. Thus, dichloroethanes released in this area will generally be transported north over populated areas.

The maximum levels observed in the vicinity of production facilities range from 70-500 $\mu g/m^3$ 1,2-dichloroethane. Levels of 1,2-dichloroethane in industrialized areas appear to range from 1-5 $\mu g/m^3$, while in urban areas, the levels appear to range from 0.04-1.4 $\mu g/m^3$ as a result of the use of this compound in leaded gasoline. In rural areas, levels of 1,2-dichloroethane appear to be less than 0.02 $\mu g/m^3$.

Large amounts of 1,2-dichloroethane are disposed on land. Volatilization may be possible in some situations. Rapid movement through the soil column has been shown in sandy soil; however, the fate of dichloroethanes in soils of higher organic content has not been studied. Considering their low affinity for adsorption, however, movement is likely to be rapid. Transport to groundwater will be facilitated by the porous soil found in the vicinity of production facilities, as well as the proximity to the water table, and the frequent and heavy rainfalls.

2.0 INTRODUCTION

The Office of Water Regulations and Standards (OWRS), Monitoring and Data Support Division, of the U.S. Environmental Protection Agency is conducting a program to evaluate the exposure to and risk of 129 priority pollutants in the nation's environment. The risks to be evaluated include potential harm to human beings and deleterious effects on fish and other biota. The goal of the task under which this report has been prepared is to integrate information on cultural and environmental flows of specific priority pollutants and to estimate the risk based on receptor exposure to these substances. The results are intended to serve as a basis for developing suitable regulatory strategy for reducing the risk, if such action is indicated.

This report is intended to provide a brief, but comprehensive, summary of the production, use, distribution, fate, effects, exposure, and potential risks of 1,1- and 1,2-dichloroethane. Waterborne routes of exposure are stressed due to the emphasis of the OWRS on aquatic and water-related pathways. Occupational exposure and the exposure of the general population to atmospheric levels of dichloroethanes are only considered in terms of the perspective they shed on the magnitude of water-related exposure.

The major problem with attempting a risk assessment for 1,2-dichloroethane is the disparity in the carcinogenicity results for ingestion and inhalation exposures. While ingestion exposures do occur, the highest exposures are a result of inhalation. Thus, it is difficult to evaluate the risk resulting from these exposures in light of the carcinogenicity data. For purposes of comparison, it was assumed that 1,2-dichloroethane is carcinogenic via inhalation, with a similar dose-response curve to that found for ingestion.

There are a number of problems with attempting a risk assessment for 1,1-dichloroethane. Data are limiting in all aspects, including sources, monitoring data, exposure information, and effects data. As a result, it was impossible to implement a quantitative risk assessment for this compound. The exposure routes and the effects associated with 1,1-dichloroethane have been identified to the extent possible.

It should be noted that there is some unavoidable inconsistency in terminology in this report and references. While the full chemical names, 1,1- and 1,2-dichloroethane are generally used, occasionally references to 1,2-dichloroethane as EDC (ethylene dichloride) are made.

This report is organized as follows:

- Chapter 3.0 contains information on releases from the production, use, and disposal of dichloroethanes, including identification of the form and amounts released and the point of entry into the environment.

- Chapter 4.0 considers the fate of dichloroethanes leading from the point of entry into the environment until exposure of receptors. Reports of available data regarding concentrations detected in environmental media are also discussed.

- Chapter 5.0 discusses the adverse effects of dichloroethanes and concentrations eliciting these effects in humans and quantifies the likely pathways and levels of human exposure.

- Chapter 6.0 considers the effects of dichloroethanes on biota and quantifies the environmental exposure of aquatic biota to the compounds.

- Chapter 7.0 discusses risk considerations for various subpopulations of humans and aquatic organisms using various risk extrapolation techniques.

- Appendices A, B, C, and D present the assumptions and calculations for the estimated environmental releases of dichloroethanes described in Chapter 3.0.

3.0 MATERIALS BALANCE

3.1 INTRODUCTION

One perspective from which exposure to a compound may be evaluated is that of a materials balance. As matter is neither created nor destroyed in chemical transformations, the total mass of all materials entering a system equals the total mass of all materials leaving that system, excluding those materials retained or accumulated in the system. From the perspective of risk analysis, a materials balance may be performed around any individual operation which serves to identify a specific population at risk (e.g., process air emissions creating high worker exposure to a toxic byproduct). An environmental materials balance, therefore, consists of a collection of materials balances, each of which is directed to a specific source or sink within the environment.

The scope of this chapter has been limited to a review of both published and unpublished data concerning the production, use, and disposal of dichloroethanes within the United States. Available literature has been critiqued and compiled to present an overview of major sources of environmental release of dichloroethanes and fully annotated tables to aid data evaluation. The environmental flows of 1,2- and 1,1-dichloroethane are shown in Figures 3-1 and 3-2, respectively.

C_2 chlorinated hydrocarbons (1,1-dichloroethane, 1,2-dichloroethane, 1,1,1-trichloroethane, vinyl chloride, vinylidene chloride, trichloroethylene, and tetrachloroethylene) are produced as coproducts or are produced individually by several processes within a single plant. In order to maximize C_2 chlorinated hydrocarbon production efficiency, these processes are integrated within a single complex where the product, byproducts, and waste streams from one process are used as raw materials for another process. The interrelationships among products manufactured at 1,2-dichloroethane facilities are shown in Table 3-1.

3.2 MANUFACTURE OF 1,2-DICHLOROETHANE

Two distinct but related processes are used to produce 1,2-dichloroethane: (1) direct chlorination in the presence of a catalyst, and (2) oxy-chlorination in the presence of a catalyst. Within oxy-chlorination plants further distinction is made as to whether air or oxygen is used as feedstock. For either process, both yield and selectivity are high for 1,2-dichloroethane manufacture, ranging from a nearly qualitative yield and 99% selectivity for direct chlorination to 93-97% yield and 93-95% selectivity for oxy-chlorination processes (see Appendix A for process descriptions). The major environmental releases of 1,2-dichloroethane from production processes are atmospheric.

For purposes of this report, manufacture of 1,2-dichloroethane has been treated within the context of an integrated balanced process at a

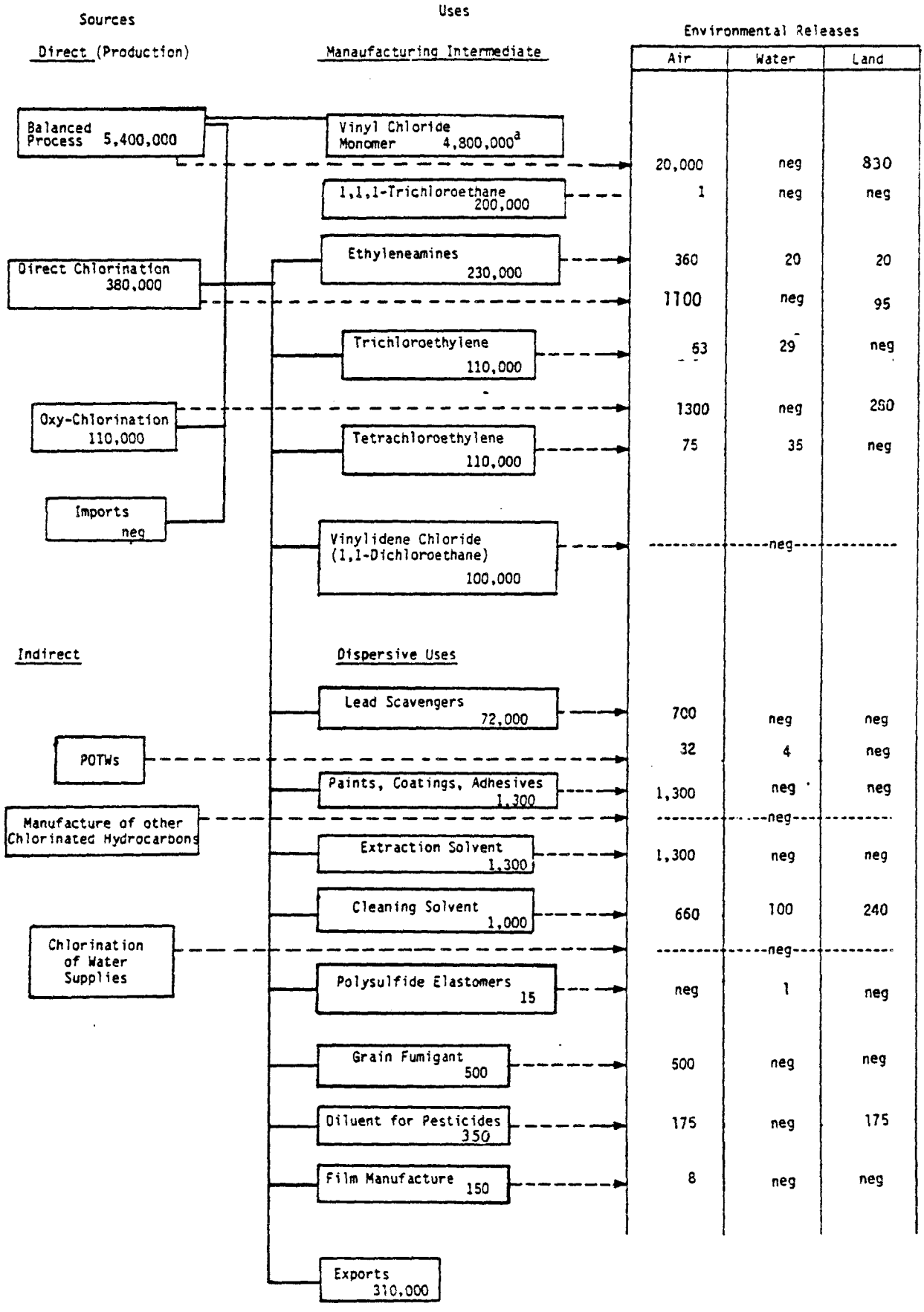

Figure 3-1. 1,2-Dichloroethane Materials Balance Flow Sheet, 1978 (kkg/yr)

a) Emissions contained within balanced process emissions.

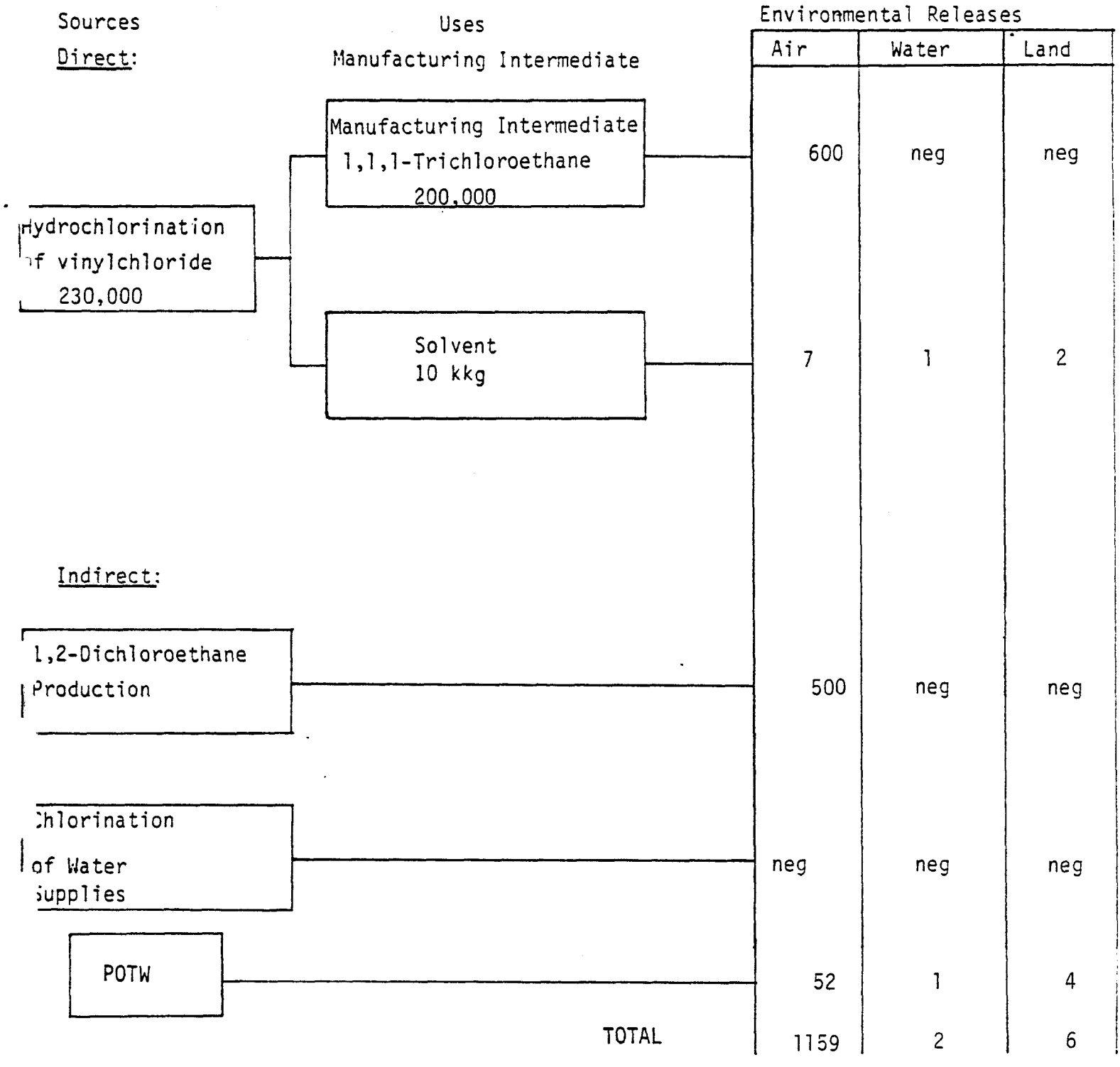

Source: See Appendix B.

Figure 3-2. 1,1-Dichloroethane Materials Balance Flow Sheet (kkg/yr)

Table 3-1. Production of 1,2-Dichloroethane and Related C_2 Products, by Facilities and Locations

PLANT	1,1-Dichloroethane	1,2-Dichloroethane	Vinyl Chloride	1,1,1-Trichloroethane	Ethyleneamines	Trichloroethene	Tetrachloroethene	Vinylidene Chloride
Borden Chemical Co.								
Geismar, LA		●	●					
Continental Oil Co.								
Lake Charles, LA		●	●					
Diamond Shamrock Corp.								
Deer Park, TX		●				●	●	
LaPorte, TX		●	●					
Dow Chemical Corp.								
Freeport, TX	●	●	●	●	●	●	●	●
Oyster Creek, TX		●	●				●	
Plaquemine, LA	●	●	●	●		●		●
Dupont and Company								
Wilmington, DE							●	
Ethyl Corporation								
Baton Rouge, LA		●	●			●	●	
Pasadena, TX								
B.F. Goodrich Co								
Calvert City, KY		●	●					
ICI Americas, Inc.								
Baton Rouge, LA		●	●					
Monochem Inc.								
Geismar, LA			●					
PPG Industries, Inc.								
Lake Charles, LA	●	●	●	●		●	●	●
Shell Chemical Co.								
Deer Park, LA		●	●					
Norco, LA		●	●					
Stauffer Chemical Co.								
Long Beach, CA		●	●				●	
Union Carbide Corp								
Taft, LA		●			●			
Texas City, TX		●			●			
Vulcan Chemical Co.								
Geismar, LA		●		●			●	
Wichita, KS							●	

vinyl chloride monomer (VCM) manufacturing facility. Waste loads generated by the three distinct processes -- direct chlorination of ethene, oxy-chlorination of ethylene, and dehydrochlorination of 1,2-dichloroethane -- are typically combined at any given facility for recovery, treatment, and disposal. Therefore, the specific number of point sources of atmospheric, aqueous, and solid wastes at a manufacturing site is a function of the actual plant design unit requirements. Daily loadings may vary at each plant site with individual operating conditions and production requirements, particularly with regard to the use of the oxy-chlorination process. Point sources of 1,2-dichloroethane loss from VCM manufacture via the balanced process include direct and oxy-chlorination reactor vent streams, light ends distillation column vent, heavy ends from the 1,2-dichloroethane recovery tower, wastewater from drying columns and scrubbers, and fugitive emissions from storage, pumps, seals, etc. (Catalytic 1979, EPA 1979a). In 1978, total loss of 1,2-dichloroethane during VCM manufacture from all sources is estimated to be 20,083 kkg (see Section A.1, Appendix A).

Assuming all VCM plants exhibit atmospheric emissions similar to those given by Drury and Hammons (EPA 1979a) and that such streams, where economically feasible, are chemically treated to recover the various organic compounds present, approximately 20,000 kkg of 1,2-dichloroethane were emitted to the atmosphere in 1978. These emissions arise largely from vent gas streams.

Combined wastewaters which arise from 1,2-dichloroethane manufacture -- vent gas scrubbers, water produced during oxy-chlorination, and wash-water -- are treated in three ways (Catalytic 1979). Pretreatment is common and eight plants steam strip process wastewater prior to biological treatment. Twelve of the sixteen plants producing 1,2-dichloroethane discharge directly to surface waters after primary and/or secondary treatment. Of this first group, two plants incinerate a portion of the 1,2-dichloroethane waste stream, and four use primary treatment only (neutralization and chemical treatment); of the eight plants using secondary treatment, three use activated sludge and five have aerated lagoons. The second group (two plants) pretreats the waste stream by steam stripping prior to discharge to municipal treatment systems. The remaining two plants dispose of wastes by deep well injection and direct discharge to Publicly Owned Treatment Works (POTWs). Based on published EPA data gathered from questionnaires to industry, and actual sampling data (see Table A-7), between 250 kkg and 600 kkg 1,2-dichoroethane are estimated to be present in wastewaters arising from 1,2-dichloroethane manufacture, assuming plants operate at 80% capacity (EPA 1976, EPA 1974). After treatment, 1,2-dichloroethane concentration is reported to range from 12 μg/l to 75 μg/l; based on these concentrations and a total wastewater flow of 9.5×10^8 l/yr (Catalytic 1979), 1,2-dichloroethane discharge to surface waters is negligible (i.e., ≤ 1 kkg: Table 3-2).

Solid wastes (containing tars, spent catalysts, and dessicants) are usually treated to recover organic compounds present. Wastes are subsequently disposed in a landfill or incinerated, recovering chlorine as

Table 3-2. Materials Balance of 1,2-Dichloroethane in 1978[a]

Source	kkg 1,2-Dichloroethane	Estimated Environmental Dispersion kkg		
		Air	Water	Land
EXPORTS[b]	310,000			
IMPORTS[b]	neg			
PRODUCTION:				
Direct Chlorination[c]	380,000	1,100	neg	95
Oxy-chlorination[d]	110,000	1,300	neg	280
Balanced Process[e]	5,400,000	20,000	neg	830
CONSUMPTIVE USES:[f]				
1,1,1-Trichloroethane[g]	200,000	1	neg	neg
Ethyleneamines[h]	230,000	360	20	20
Trichloroethene[i]	110,000	63	29	neg
Tetrachloroethene[j]	110,000	75	35	neg
Vinylidene Chloride[k]	100,000	neg	neg	neg
Polysulfide Elastomers[l]	15	neg	1	neg
DISPERSIVE USES				
Lead Scavenger[m]	72,000	700	neg	neg
Paint, Coating, Adhesive Solvent[n]	1,300	1,300	neg	neg
Extraction Solvent[o]	1,300	1,300	neg	neg
Cleaning Solvent[p]	1,000	660	100	240
Grain Fumigant[q]	500	500	neg	neg
Pesticide/Herbicide Carrier[r]	350	175	neg	175
Film Manufacture[s]	150	8	neg	neg

FOOTNOTES NEXT PAGE

Table 3-2. (continued)

a) Values have been rounded to two significant figures, neg is <1 kkg.

b) U.S. Department of Commerce, 1980.

c) Air emissions: storage facilities (0.0006 kg EDC/kg EDC produced) and scrubber vent (0.0022 kg/kg). Water discharge: scrubber waste (0.0018 kg/kg EDC produced), uncontrolled; see p. 3-5 for post-treatment concentrations, resulting in negligible (<1 kkg) discharge shown. Both from EPA, 1974a. Land dispersion: 0.0007 kg tar/kg EDC produced, EPA, 1974a; up to 35% EDC in EDC tar (Jensen et al., 1975).

d) Emission factors for all media from EPA, 1974b. Air: process vent gas (0.007 kg EDC/kg EDC produced) and distillation vent gas (0.0045 kg EDC/kg EDC produced). Water: 0.0006 kg EDC/kg produced, (uncontrolled discharge); see p. 3-5 for post treatment concentrations, resulting in negligible (<1 kkg) discharge shown. Land: heavy ends 0.0025 kg EDC/kg EDC produced. Storage facilities: 0.0006 kg EDC/kg EDC produced (included in air total).

e) Total atmospheric emissions: 0.0027 kg EDC/kg EDC consumed from distillation vent, 0.0010 kg EDC/kg from direct chlorination and 0.0010 kg EDC/kg oxy-chlorination (EDC produced by direct and oxy-chlorination assumed equal). Total water discharge based on 190 gpm flow rate, EDC concentration 1500 - 3600 ppm, and 80% capacity operation, EPA, 1978; EPA, 1974a, uncontrolled; see p. 3-5 for post-treatment concentrations, resulting in negligible (1 kkg) discharge shown. Total land discharge tar concentration 0.8 kg tar/kkg VCM produced, 36% EDC in tar, Lunde, 1965. Discharge of EDC by company using balanced process based on individual company capacity as a percent of total production; totals do not add due to rounding.

f) Based on amount of product derived from 1,2-dichloroethane and reaction stoichiometry (SRI, 1979a).

g) Air: 1) 0.004g EDC/kg 1,1,1-trichloroethane produced (distillation vent gas), for ethane- and vinyl chloride-based processes controlled by combusion in incineration (EPA, 1979b). Water: Estimated as 1-10 kkg, plus 1-10 ppm EDC in 1,1,1-trichloroethane streams based on industry estimate Denison, 1980. Aquatic discharges are believed to be insignificant based on process configuration. 1,2-Dichloroethane discharge to land is believed to be negligible based upon recycling of solid waste streams to carbon tetrachloride/tetrachloroethylene production. See Appendix C-2.

h) EDC consumption based on total ethylenediamene production of 64 x 10^3 kkg (SRI, 1979a) and reaction yield of 45% (Lichenwalter and Cour, 1969). Environmental releases based on factor of 6 kg EDC/kkg product, distributed 90:5:5. See Appendix C-3.

i) EDC residual level in TCE streams = 10-100 ppm (Dension, 1980); air: 3.1 g/kg Trichloroethylene, 85% control (EPA, 1979b). Water: 0.42 kg H_2O/kg trichloroethylene, 510 μg EDC/l (catalytic, 1979). 135,000 kkg Trichloroethylene produced in 1978 (SRI, 1979a). See Appendix C-4.

j) 1.6 x 10^5 kkg produced using EDC as feedstock (SRI, 1979a). Same emission factors as in note 1.

Table 3-2. (concluded)

k) No EDC detected in waste streams. See Appendix C.5.

l) Based on reaction yield of 99%, solubility of 1,2-dichloroethane in water, and water use rate of 20 kkg/kkg product. Air emissions are assumed to be controlled by vent condensors. See Appendix C.6.

m) Combined discharge from gasoline blending, filling and "breathing" of storage tanks, and refueling of automobiles. See Appendix C.7. Releases to water and land are thought to be negligible.

n) Used as 1) solvent to dissolve binder and then coatings or paints and 2) as a solvent cement for thermoplastic materials. All EDC is assumed to evaporate. See Appendix C.8.1.

o) Includes extraction of spices oleoresins and animal feeds. Assume solvent recovery of 95% (Lo, 1980). Permissible residues in spices: 30 ppm, feed: 300 ppm (Federal Food, Drug and Cosmetic Act. Aquatic discharges are assumed to be negligible. See Appendix C.8.2.

p) PVC equipment cleaning and degreasing of textiles; assume equal distribution between these uses. By analogy to trichloroethylene use as degreasing/fabric scouring to solvent, 66% emitted to air, 24% to land and 10% to water (EPA, 1981). See Appendix C.8.3.

q) Assume that all EDC is eventually released to the atmosphere following processing and cooking of the grain. See Appendix C.8.4.

r) Assume 50% of EDC evaporates to the atmosphere, 50% is retained by soil initially. See Appendix C.8.5.

s) Assume use as a specialty solvent within the film industry in quantities too small to warrant recovery. See Appendix C.8.5.

hydrogen chloride (McPherson et al. 1979). The compositions of vinyl chloride tars and heavy ends are shown in Tables A-8 and A-9. The concentration of 1,2-dichloroethane in VCM tars is process dependent; EPA (1975a) lists such tars as 36% 1,2-dichloroethane by weight. Estimates of VCM tar production rates range from 0.8 kg/kkg (EPA 1975b) to the exceedingly high value of 40 kg/kkg of vinyl chloride produced (Jensen et al. 1975). Using the former emission factor (2.89×10^5 kkg VCM produced from 1,2-dichloroethane) and a 1,2-dichloroethane concentration of 36% by weight, 83 kkg of 1,2-dichloroethane were discharged as solid waste. Using the information in footnotes c and d of Table 3-2, solid waste releases of 1,2-dichloroethane totaled 93 kkg and 280 kkg for direct and oxychlorination, respectively. The disposition of such wastes is unclear; indeed, this waste may be a suitable feedstock for tetrachlorethylene/carbon tetrachloride via a chlorinolysis process (EPA 1976). If incinerated, assuming a combustion efficiency of 99.9%, 1 kkg of 1,2-dichloroethane would be emitted.

3.3 MANUFACTURE OF 1,1-DICHLOROETHANE

In contrast to the production of 1,2-dichloroethane, commercial production of 1,1-dichloroethane is as an unisolated intermediate step during manufacture of 1,1,1-trichloroethane. Small amounts (<10 kkg) are produced and sold, however, by specialty and laboratory chemical firms. Inadvertent sources of 1,1-dichloroethane include production of 1,2-dichloroethane via oxy-chlorination of ethylene, direct chlorination of ethane (1,1,1-trichloroethane manufacture), direct and oxychlorination of 1,2-dichloroethane to produce trichloroethylene/tetrachloroethylene, and epichlorohydrin manufacture. As shown in Figure 3-2, the major environmental releases of 1,1-dichloroethane are in the form of atmospheric emissions (see Appendix B for specific production and use data).

3.4 USES OF 1,2-DICHLOROETHANE

Uses of 1,2-dichloroethane fall into two broad categories: (1) consumptive uses (e.g., used as a chemical manufacturing intermediate), and (2) dispersive uses, where 1,2-dichloroethane is released to the environment as a normal consequence of product use. Dispersive uses of 1,2-dichloroethane as a solvent, fumigant, herbicide or pesticide carrier, and lead scavenger are an important source of 1,2-dichloroethane emissions to the atmosphere (see Appendix C). Discharges of 1,2-dichloroethane wastes to land are somewhat more difficult to quantify; many wastes which result from 1,2-dichloroethane production are suitable for recycle as feedstock for carbon tetrachloride/tetrachloroethylene production. While it is assumed that such wastes are recycled wherever possible, there is a portion of such wastes which is nonrecyclable. The 1,2 isomer is also used as a cleaning solvent for PVC reactors and as a textile scouring agent. Losses during textile scouring operations are largely to the atmosphere but reactor wastes are presumed to be collected and drummed for land disposal. The compound used as a pesticide/herbicide carrier is also an important source of 1,2-dichloroethane discharged to land.

Indirect sources of 1,2-dichloroethane release, such as in the manufacture of other chlorinated hydrocarbons or chlorination of water supplies, do not appear to be significant (see Appendix A, Section A-7).

3.5 USE AND ENVIRONMENTAL RELEASE OF 1,1-DICHLOROETHANE

Release of 1,1-dichloroethane is largely to the atmosphere as a result of intermediate storage of 1,1-dichloroethane and as an unintentional byproduct during production of 1,2-dichloroethane. Discharges to the aquatic environment occur from use of 1,1-dichloroethane as a solvent. These losses result from the use of relatively small amounts of 1,1-dichloroethane which do not warrant recovery. Releases of 1,1-dichloroethane to land are unknown. Releases of 1,1-dichloroethane are summarized in Figure 3-2 and presented in annotated form in Table 3-3.

3.6 MUNICIPAL DISPOSAL OF 1,1- AND 1,2-DICHLOROETHANE

Loading of both 1,1- and 1,2-dichloroethane to Publicly Owned Treatment Works (POTWs) is dependent upon the type of industry in an area, as well as variations in that industry's discharge. A framework for estimating the flow of both these compounds through the nation's POTWs is detailed in Appendix D. These data, based on a recent EPA study (EPA 1980), suggest that 4 kkg of 1,2-dichloroethane are discharged to surface waters from POTWs per year, while approximately 32 kkg are emitted to the atmosphere. Such an estimate is consistent with the fact that 1,2-dichloroethane apparently is not concentrated in sludge (EPA 1980; see Appendix D).

The 1,1 isomer exhibits a different distribution pattern. Based on EPA (1980) data, approximately 1 kkg of 1,1-dichloroethane are discharged in effluent from POTWs per year, 4 kkg are disposed on land as sludge, and 52 kkg are emitted to the atmosphere (see Appendix D).

Table 3-3. Materials Balance of 1,1-Dichloroethane in 1978[a]

Source	kkg of 1,1-Dichloroethane	Estimated Environmental Releases, kkg		
		Air	Water	Land
PRODUCTION:[b]				
Hydrochlorination of vinyl chloride	230,000	607	1	2
INADVERTENT:				
1,2-Dichloroethane manufacture via the[d] balanced process		200	neg	neg
1,2-Dichloroethane manufacture via[e] direct chlorination		300	neg	neg

a) All values rounded to two significant figures.

b) Use as a solvent (10 kkg is assumed to be in relatively small amounts which do not warrant recover. Releases from solvent use are allocated 66% to air, 24% to land, and 10% to water by analogy to trichloroethylene (EPA 1981).

c) Use as a solvent is assumed to be in relatively small amounts which do not warrant recovery.

d) Based upon 5.1×10^6 kkg 1,2-dichloroethane produced via the balanced process and an emission factor of 0.04 kg 1,1-dichloroethane/kkg 1,2-dichloroethane produced (Lunde, 1965).

e) Based upon 380×10^3 kkg 1,2-dichloroethane production via direct chlorination of ethylene and an emission factor of 0.8 kg 1,1-dichloroethane/kkg 1,2-dichloroethane produced (Lunde, 1965).

REFERENCES

Adams, J. (Joe Adams Company) Personal Communication. June 1980.

Aldrich Chemical Company. Personal Communication. June 1980.

Archer, W.L. Chlorocarbons, chlorohydrocarbons (Survey). (In) Kirk-Othmer Encyclopedia of Chemical Technology. 3rd ed. New York: John Wiley and Sons; 5:688-731;1979.

Balasubramanian, S.N.; Rihani, D.N.; Doraiswamy, L.K. Film model for ethylene dichloride formation, absorption and reaction of two gases in a Liquid. Industrial and Engineering Chemistry: Fundamentals 5(2):184-188;1966.

Berck, B. Sorption of ethylene dibromide, ethylene dichloride and carbon tetrachloride by cereal products. Journal Agricultural Food Chemical 13(3):248-254;1965.

Berenbaum, M.B. Polymers containing sulfur. (In) Kirk-Othmer Encyclopedia of Chemical Technology. 2nd ed. New York: John Wiley and Sons; 16:253-272;1968.

Bower, W. [Kalamazoo Spice Extraction Company (KALSEC)] Personal Communication. June 1980.

Burns, T. (American Spice Trade Association) Personal Communication. June 1980.

Catalytic. Draft Summary Report of BAT-308 Responses; 1979.

Denison, J. (PPG Industries, Inc) Personal Communication. June 1980.

Dilling, W.L.; Tefertiller, N.B.; and Kallos, G.J. Evaporation rates and reactivities of methylene chloride, chloroform, 1,1,1-trichloroethane, trichloroethylene, tetrachloroethylene, and other chlorinated compounds in dilute aqueous solutions. Environmental Science and Technology 9(9):833-838;1975.

Drisko, R.W. Coatings, marine. (In) Kirk-Othmer Encyclopedia of Chemical Technology. 3rd ed. New York: John Wiley and Sons; 6:445-454;1980.

Environmental Protection Agency, 1974a. Survey Reports on Atmospheric Emissions for the Petrochemical Industry, Volume IV. EPA 450/3-73-005; 1974.

Environmental Protection Agency, 1974b. Engineering and Cost Study of Air Pollution Control for the Petrochemical Industry, Volume 3: Ethylene Dichloride Manufacture by Oxychlorination. EPA 450/3-73-006-c;1974.

Environmental Protection Agency, 1975a. Disposal of Organochlorine Wastes by Incineration at Sea. EPA 450/9-75-014;1975.

Environmental Protection Agency, 1975b. Engineering and Cost Study of Air Pollution Control for the Petrochemical Industry, Volume 8: Vinyl Chloride Manufacture by the Balanced Process. EPA 450/3-73-006-h; 1975.

Environmental Protection Agency, 1976. Extraction of Chemical Pollutants from Industrial Wastewaters with Volatile Solvents. EPA 600/2-76-220;1976.

Environmental Protection Agency, 1977a. Review of the Environmental Fate of Selected Chemicals. EPA 560/5-77-003;1977.

Environmental Protection Agency, 1977b. National Organic Monitoring Survey. Office of Water Supply. Washington, DC; 1977

Environmental Protection Agency, 1978a. Miscellaneous and Small Volume Consumption of Ethylene Dichloride. Washington, DC: EPA Contract 68-01-3899;1978.

Environmental Protection Agency. 1978b. Needs Survey, Office of Water Planning and Standards. Washington, DC: 1978.

Environmental Protection Agency, 1979a. Investigations of Selected Environmental Pollutants: 1,2-Dichloroethane. EPA 560/2-78-006; 1979.

Environmental Protection Agency, 1979b. Emission Control Options for the Synthetic Organic Chemicals Manufacturing Industry. EPA Contract 68-02-2577;1979.

Environmental Protection Agency, 1980. Fate of Priority Pollutants in Publicly Owned Treatment Works. Interim Report EPA-440/1-80/301. Washington, DC: 1980.

Environmental Protection Agency, 1981. An Exposure and Risk Assessment for Trichloroethylene, Final Draft, prepared by Arthur D. Little and Acurex Corporation; March 1981.

Elkin, L.M. Chlorinated solvents. Process Economic Program Report No. 48. Menlo Park, CA: Stanford Research Institute; 1969.

Farber, H. Personal Communication. June 1980.

Fishbein, L. Production, Uses and Environmental Fate of Ethylene Dichloride and Ethylene Dibromide. Ames, B.; P. Infante; and R. Reitz, eds. Banbury Report 5, Ethylene Dichloride: A Potential Health Risk? Cold Spring Harbor, NY: Banbury Center; 1980. (Unpublished Paper)

Fowler, D.L. (U.S. Department of Agriculture, Agriculture Stabilization and Conservation Service) Personal Communication. June 1980.

Guardian Chemical Company. Personal Communication. May 1980.

Hardie, D.W. Vinyl chloride. (In) Kirk-Othmer Encyclopedia of Chemical Technology. 2nd ed. New York: John Wiley and Sons; 5:171-178;1964.

Jacobs, E.S. Use and Air Quality Impact of Ethylene Dichloride and Ethylene Dibromide Scavengers in Leaded Gasoline. Ames, B.; P. Infante; and R. Reitz, eds. Banbury Report 5, Ethylene Dichloride: A Potential Health Risk? Cold Spring Harbor, NY: Banbury Center; 1980. (Unpublished Paper)

Jensen, S.; Lange, R; Parlmert, K; Renberg, L. On the Chemistry of EDC-Tar and its Biological Significance in the Sea. Proceedings of the Royal Society of London, Series B; 189:333-346;1975.

Klanderman, B. (Eastman Kodak Company) Personal Communication. June 1980.

Leach, H.S.; Price, J.L., inventors; Monsanto Company, assignee. Chlorination of olefins in the presence of amides. U.S. patent 3,338,982. 1967 August 29.

Lichenwalter, M; Cour, T.H. Inventors, Jefferson Chemical Co., Inc., assignee. French patent 1,555, 162. 1969 January 24.

Lo, Teh C. (Hoffman-La Roche, Inc) Personal Communication. May 1980.

Lowenheim, F.A.; Moran, M.K. Ethylene dichloride. (In) Faith, Keyes and Clark's Industrial Chemicals. 4th ed. New York: Wiley Interscience; 392-396;1975.

Lunde, K.E. Vinyl chloride. Process Economic Program Report No. 5A. Menlo Park, CA: Stanford Research Institute; 1967.

McDonald. L.P.; Skinner, D.J.; Hopton, F.J.; Thomas, G.H. Burning waste chlorinated hydrocarbons in a cement kiln. Ottawa, Canada: Environmental Protection Service, Fisheries and Environment; EPS-4-WP-77-2;1977.

McNeill, W.C. Chlorocarbons - hydrocarbons (CHCl=CCl). (In) Kirk-Other Encyclopedia of Chemical Technology. 3rd ed. New York: John Wiley and Sons; 5:745-753;1980.

McPherson, R.W.; Starks, C.M.; Fryar, G.J. Vinyl chloride monomer ... what you should know. Hydrocarbon Processing 3:75-88;1979.

Monthly Energy Review. April, 1980.

Page, B.D.; Kennedy, P.C. Determination of methylene chloride, ethylene dichloride and trichloroethylene as solvent residues in spice oleoresins, using vacuum distillation and electron capture gas chromatography. Journal of the Association of Official Analytical Chemists 40:206;1975.

Palmer, J. (Modern Paints and Coatings Magazine) Personal Communication, June 1980.

Panek, J.R. Polysulfide Rubbers. (In) Rubber Technology. 2nd ed. Van Nostrand Reinhold Co. 1978.

Phillipe, D. (Water Quality Board of California) Personal Communication, June, 1980.

Schulman, M.A; Schultheis, J.J. Polysulfide Polymers. Babbit, R.O., ed. The Vanderbilt Rubber Handbook. Norwalk, CT: R.T. Vanderbilt Company, Inc.; 207-215-215.

Schurtz, J. (Kennecott Copper Corp) Personal Communication, June 1980.

Severino, F.T., inventor; Stauffer Chemical Company, assignee. Method for Recovering Ethylene Values. U.S. patent 4,046,822. 1977 Sept. 6. 16 p.

Simeroth, D. Personal Communication, June 1980.

Sittenfield, M. (Sittenfield and Associates) Personal Communication, June 1980.

Spitz, R.D. Diamines and higher amines, aliphatic. (In) Kirk-Othmer Encyclopedia of Chemical Technology. 3rd ed. New York: John Wiley and Sons; 7:580-602;1980.

Stanford Research Institute. Chemical Economics Handbook. Menlo Park, CA: Stanford Research Institute; 1979a.

Stanford Research Institute. Directory of Chemical Producers. Menlo Park, CA: Stanford Research Institute; 1979b.

Sudderth, R.B. (Hankel Chemical Co.) Personal Communication, June 1980.

U.S. Census Bureau. 1977 Census of Manufacturers. Washington, DC., U.S. Census Bureau; 1978.

U.S. Department of Agriculture. Current Industrial Report: Animal Feed Manufacturing. Washington, D.C. U.S. Department of Agriculture; 1975.

U.S. Department of Commerce (Foreign Trade Division, Trade Information Branch) Personal Communication; June 1980.

U.S. International Trade Commission (USITC). Synthetic Organic Chemicals, U.S. Production and Sales, 1978. Washington, D.C.; 1979

Van Antwerp, A.E.; Harpring, J.W.; Sterbeng, R.G.; Kang, T.C.; C. Kang, inventors; B.F. Goodrich, assignee. Method of preparing 1,2-dichloroethane. U.S. patent 3,488,398. 1970 January 6. 8 p.

Vazirani, H.N. (Bell Laboratories) Personal Communication. June 1980.

Vulcan Materials Company, inventor; Vulcan Materials Company, assignee. British patent 980,983. 1965 Jan 20. 10 p.

Wit, S.L.; Besemer, A.F.H.; DAS, H.A.: Goldhoop, W.; Loosters, F.F. Toxicology Report No. 36/39. Bilthover, The Netherlands: National Institute of Public Health; 1969.

4.0 FATE AND DISTRIBUTION OF DICHLOROETHANE IN THE ENVIRONMENT

4.1 INTRODUCTION

This chapter describes the levels of dichloroethanes which have been observed in the environment. In addition, it discusses the environmental pathways which may result in these levels. Laboratory data, field data, and modelling were utilized in preparing this chapter.

4.2 DISTRIBUTION OF DICHLOROETHANES IN THE ENVIRONMENT

Monitoring data for concentrations of 1,1- and 1,2-dichloroethane in the environment have been collected and analyzed for air and water; data relating to concentrations in soil and biota do not appear to be as readily available. This chapter presents data on 1,1- and 1,2-dichloroethane concentrations in ambient waters, sediment, air, and fish tissue.

4.2.1 Waters and Sediment

Shakelford and Keith (1976) identified concentrations of 1,2-dichloroethane in surface waters distant from point sources at 1 μg/l, with some samples at 100-fold greater concentrations.

Table 4-1 shows monitoring data for dichloroethanes, as reported from the STORET system, 1975 to present (U.S. EPA 1980a). Most of the data included is remarked, or less than the detection limit. Concentrations of 1,1-dichloroethane range from undetected 1900 μg/l. The highest reading, 1900 μg/l, occurred in the Upper Mississippi basin, Mississippi River at Alton, Illinois; however, a second sampling on the same day at the monitoring station was documented at 50 μg/l. A total of 192 observations were reported. Concentrations of 1,2-dichloroethane range from undetected to 230 μg/l.

Effluents from four pilot tertiary wastewater treatment systems were monitored for selected trace organic compounds in Los Angeles County (Baird *et al*. 1979). In general, 1,2-dichloroethane was not detected in the various effluent types from the treatment system. Detection of 1,2-dichloroethane occurred at 0.4 μg/l in two of the four advanced wastewater treatment systems.

A total of 204 water samples were collected from 14 heavily industrialized river basins by researchers from the University of Illinois, during 1975 and 1976. The 1,2 isomer was detected in 53 of the 204 samples (26%) using gas chromatographic and mass spectrometric techniques. Concentrations ranged from 1-90 μg/l as shown in Table 4-2 (Ewing and Chian 1979).

TABLE 4-1. AMBIENT WATER CONCENTRATIONS FOR DICHLOROETHANES

Compound	Number of Observations	Maximum (μg/l)	Mean (μg/l)
1,2-dichloroethane			
unremarked[a]	10	230	69.3
remarked	57	50	20.4
1,1-dichloroethane			
unremarked[a]	6	1900	317.6
remarked	186	50	10.5

[a]Unremarked data are generally positive values; remarked data are noted to be less than a given value, generally the detection limit. The maximum and the means are included to show the detection limits for most analyses.

Source: U.S. EPA (1980a).

TABLE 4-2. CONCENTRATION OF 1,2-DICHLOROETHANE IN SURFACE WATERS FROM INDUSTRIAL AREAS

Site	Nearest Town	Concentration (μg/l)
	Chicago Area and Illinois River Basin	
Chicago Sanitary and Ship Canal	Lockport, IL	1
North Side Sewage Treatment Plant	Lincolnwood, IL	1
North Side Sewage Treatment Plant	Lincolnwood, IL	1
Calumet River	Chicago, IL	6
Calumet-Sag Channel	Blue Island, IL	1
Des Plaines River	Elwood, IL	1
Illinois River	Dresden, IL	2
Illinois River	Utica, IL	1
Illinois River	Hennepin, IL	1
	Delaware River Basin	
Delaware River	Woodland Beach, DE	2
Delaware River	Port Penn, DE	1
Delaware River	Pigeon Point, DE	12
Delaware River	Marcus Hook, PA	15
Delaware River	Paulsboro, NJ	9
Delaware River	Philadelphia, PA	15
Delaware River	Philadelphia, PA	11
Delaware River	Bridesburg, PA	90
Delaware River	Pigeon Point, DE	8
Delaware River	Torresdale, PA	4
	Hudson River Basin	
Raritan Bay	Tottenville, NY	10
Raritan Bay	Perth Amboy, NJ	9
Arthur Kill	Perth Amboy, NJ	8
Arthur Kill	Sewaren, NJ	9
Arthur Kill	Chrome, NJ	9
Arthur Kill	Graselli, NJ	8
Arthur Kill	Port Elizabeth, NJ	1
Newark Bay	Newark, NJ	3
Hudson River	Bayonne, NJ	2
Hudson River	Rosebank, NJ	2
Hudson River	Sandy Hook, NJ	2
Hudson River	Beacon, NY	1
Hudson River	Poughkeepsie, NY	2
Hudson River	Poughkeepsie, NY	2
Hudson River	Glenmont, NY	5

TABLE 4-2. CONCENTRATION OF 1,2-DICHLOROETHANE IN SURFACE WATERS FROM INDUSTRIAL AREAS (Continued)

Site	Nearest Town	Concentration (μg/l)
Passaic River	Newark, NJ	1
Hackensack River	Jersey City, NJ	1
Hudson River	Fort Lee, NJ	1
Hudson River	Fort Lee, NJ	1
Mississippi River Basin, Louisiana and Texas		
Houston Ship Channel	Morgan Point, TX	1
Houston Ship Channel	Lynchburg, TX	1
Houston Ship Channel	Deer Park, TX	2
Mississippi River	Venice, LA	1
Mississippi River	Port Sulphur, LA	2
Mississippi River	Luling, LA	1
Mississippi River	Lutcher, LA	2
Mississippi River	New Orleans, LA	1
Mississippi River	New Orleans, LA	1
Mississippi River	Plaquemine, LA	1
Ohio River Basin		
Ohio River	Joppa, IL	2
Tennessee River	Paducah, KY	3
Kanawha River	Winfield, WV	1
Great Lakes and Tennessee River Basin		
Fields Brooks	Ashtabula, OH	4
Lake Superior	Beaver Bay, WI	1

Source: Ewing and Chian (1979).

Monitoring of dichloroethanes in sediment has been recorded in STORET for 1,1-dichloroethane only (U.S. EPA 1980a). The summary maximum and mean concentrations are shown in Table 4-3.

4.2.2 Air

Recent investigations of 1,2-dichloroethane in air which were conducted near production and user facilities in Calvert City, Kentucky; Lake Charles, Louisiana; and New Orleans, Louisiana indicate that ambient concentrations are a function of the production rate, extent of emission control, and meteorological and topographical features (PEDCo Environmental, Inc. 1980). The highest concentration recorded in Calvert City was 70 $\mu g/m^3$. In New Orleans a concentration of 170 $\mu g/m^3$ near the production facility was reported, but a 10 $\mu g/m^3$ concentration was reported at other sites in the city. In Lake Charles concentrations ranged from 200 to 500 $\mu g/m^3$ at several sites.

In a study of 19 halocarbons in the atmosphere of rural Northwest United States, 1,1- and 1,2-dichloroethane were noted as being absent at a detection limit of 0.02 $\mu g/m^3$ (Grimsrud and Rasmussen 1975).

Jacobs (1979) reported ambient air concentrations of 1,2-dichloroethane (measured by the U.S. EPA) in heavily trafficked areas near gasoline service stations in three cities. Phoenix, Arizona had a concentration of 0.032 $\mu g/m^3$ with 36,000 vehicles per day, Los Angeles, California had 0.052 $\mu g/m^3$ with 53,000 vehicles per day, and Seattle, Washington had 0.04 $\mu g/m^3$ with 32,000 vehicles per day. Singh et al. (1980) reported somewhat higher levels of 1,2-dichloroethane in urban areas of 0.2-6 $\mu g/m^3$ as a range of averages for four cities; Houston, Texas; St. Louis, Missouri; Denver, Colorado; and Riverside, California. As expected, the highest levels were found in Houston, Texas. Average levels of 0.24-0.26 $\mu g/m^3$ 1,1-dichloroethane were also reported for these locations.

Table 4-4 displays ambient air concentrations of 1,2-dichloroethane monitored at four locations in New Jersey. The subset of quantifiable samples is shown along with the total samples. The mean concentrations range from 0.48-2.64 $\mu g/m^3$ for all samples and from 1.6-6.0 $\mu g/m^3$ for quantifiable samples (Bozzelli and Kebbekus 1979).

Pellizzari and coworkers (1979) have sampled four highly industrial areas for halogenated organic compounds. The 1,2 isomer was commonly found in these samples, and the 1,1 isomer was less frequently found. Table 4-5 summarizes the results of this work. It can be seen that the dichloroethane concentrations were highly variable, with 139 $\mu g/m^3$ and 0.55 $\mu g/m^3$ the respective maxima. These authors also sampled basements of houses in the old Love Canal area. No 1,1-dichloroethane was detected, and 1,2-dichloroethane was detected in 2 of 10 samples at 0.100 and 0.127 $\mu g/m^3$.

4.2.3 Soil

No monitoring data are readily available for concentrations of dichloroethanes in soils.

TABLE 4-3. CONCENTRATIONS OF 1,1-DICHLOROETHANE IN SEDIMENTS

River Basin	Number of Observations	Maximum	Mean
		($\mu g/m^3$)	
Lower Mississippi	1	ND	ND
Western Gulf	14	ND	ND
Pacific Northwest	20	5	5

ND = not detected

Source: U.S. EPA (1980a).

TABLE 4-4. CONCENTRATIONS OF 1,2-DICHLOROETHANE IN AMBIENT AIR AT FOUR SITES IN THE STATE OF NEW JERSEY, APRIL TO NOVEMBER, 1978

Location	All Samples			Quantifiable Samples	
	Number	Mean*	Maximum	Number	Mean
		($\mu g/m^3$)			($\mu g/m^3$)
Rutherford	150	1.9	25.5	55	5.3
Newark	110	2.7	64.8	49	6.1
Piscataway-Middlesex	18	0.49	4.0	5	1.6
Somerset County	30	1.9	15.8	13	4.5

*Trace amounts added in as lower limit of detection (0.04 $\mu g/m^3$).

Source: Bozzelli and Kebbekus (1979).

TABLE 4-5. DICHLOROETHANE LEVELS IN AMBIENT AIR OF INDUSTRIAL AREAS

City	1,1-Dichloroethane No. Detected/No. Sampled	Concentration Range ($\mu g/m^3$)	1,2-Dichloroethane No. Detected/No. Sampled	Concentration Range ($\mu g/m^3$)
Niagara Falls, NY	0/9	ND[a]	2/8	T[b]
Rahway/Woodbridge, Boundbrook, and Passaic, NJ	10/66	T-0.342	75/93	T-0.139
Baton Rouge, LA	12/43	T-0.500	36/43	0.009-0.010
Houston, TX	1/30	0.555	22/30	T-0.066

[a]Not detected.
[b]Trace.

Source: Pellizzari *et al*. (1979).

4.2.4 Biota

Basically no data are readily available relating to residues of dichloroethanes in the marine environment or in other biota, although absorption by fish and oysters has been noted (Fishbein 1980).

Monitoring of fish tissue for dichloroethanes, as reported by the STORET system from 47 stations, includes entries for four basins (U.S. EPA 1980a). The documentation is shown in Table 4-6.

4.3 ENVIRONMENTAL PATHWAYS AND FATE

4.3.1 Physicochemical Properties

The 1,2 isomer ($C_2H_4Cl_2$) is a saturated aliphatic hydrocarbon of the following structure:

```
   H H
   | |
Cl-C-C-Cl
   | |
   H H
```

The 1,1 isomer has the following structure:

```
  Cl H
   | |
H-C -C-H
   | |
  Cl H
```

Physicochemical properties of 1,1- and 1,2-dichloroethane are listed in Tables 4-7 and 4-8.

4.3.2 Major Environmental Pathways

Figure 4-1 provides a schematic overview of the major environmental pathways (transport and degradation) of 1,1- and 1,2-dichloroethane. The major emission sources (see Chapter 3.0 for details) may be grouped as follows:

- Point-source atmospheric emissions (e.g., manufacturing sites, heavy-end incineration, and gas stations)

- Area-source atmospheric emissions (e.g., chemical dump sites, automobiles, wastewater treatment impoundments [lagoons, aeration basins, etc.], fumigants, paint coatings, and adhesives)

- Area-source discharges to land (sites used for disposal of heavy ends and EDC-tar sludges from manufacturing operations)

TABLE 4-6. CONCENTRATIONS OF DICHLOROETHANES IN FISH TISSUE

Basins	Number of Observations	Concentration (mg/kg-wet weight) Maximum	Minimum	Mean of all Values	Standard Deviation
Lower Mississippi	2	ND	ND	ND	-
Western Gulf	3	ND	ND	ND	-
Pacific Northwest	37	20	0.05	0.7	3.3
Alaska	6	0.05	0.05	0.05	-
Total	48	20	ND	0.5	2.9

ND = not detected

Source: U.S. EPA (1980a).

TABLE 4-7. PHYSICOCHEMICAL PROPERTIES OF 1,2-DICHLOROETHANE

Property	Value
Molecular weight	98.96
Density at 20°C, g/l	1.2351
Melting point, °C	-35.36
Boiling point, °C	82.4
Index of refraction at 20°C	1.4448
Vapor pressure, torr	
At -44.5°C	1
At -13.6°C	10
At 10.0°C	40
At 29.4°C	100
At 64.0°C	400
At 82.4°C	760
Solubility in water, mg/l	
At 20°C	8690
At 30°C	9200
Octanol/H_2O partition coefficient	1.48
Biochemical oxygen demand (5 days, 10 days), %	0
Theoretical oxygen demand, mg/mg	0.97
Measured chemical oxygen demand, mg/mg	1.025
Vapor density (air = 1)	3.42
Flash point, closed cup, °C	13
Ignition temperature, °C	413
Explosive limit, % by volume in air	
Lower	6.2
Upper	15.9
Latent heat of fusion, cal/g	21.12
Critical temperature, °C	288

TABLE 4-7. PHYSICOCHEMICAL PROPERTIES OF 1,2-DICHLOROETHANE (Continued)

Property	Value
Critical pressure, atm	53
Critical density, g/cm^3	0.44
Adsorption coefficient (Koc)	17
Conversion factors at 25°C and 760 torr	1 mg/l = 1 g/m^3 = 247 ppm 1 ppm = 4.05 mg/m^3 = 4.05 ug/l

CAS Reg. #107-06-2

NIOSH Reg. #KO05250

Source: Drury and Hammons (1979).

TABLE 4-8. PHYSICOCHEMICAL PROPERTIES OF 1,1-DICHLOROETHANE

Property	Value
Molecular weight	98.96
Density at 20°C, g/l	1.1747
Melting point, °C	-96.7
Boiling point, °C	57.3
Vapor pressure, kPA	
10°C	15.37
20°C	24.28
30°C	36.96
Solubility at 20°C, g	
Dichloroethane in 100 g H_2O	0.55
H_2O in 100 g dichloroethane	0.097
Latent heat of vaporization at 20°C, J/g	280.3
Critical temperature, °C	261.5
Critical pressure, MPa	5.06
Flash point, closed cup, °C	-12.0

Source: Archer (1979).

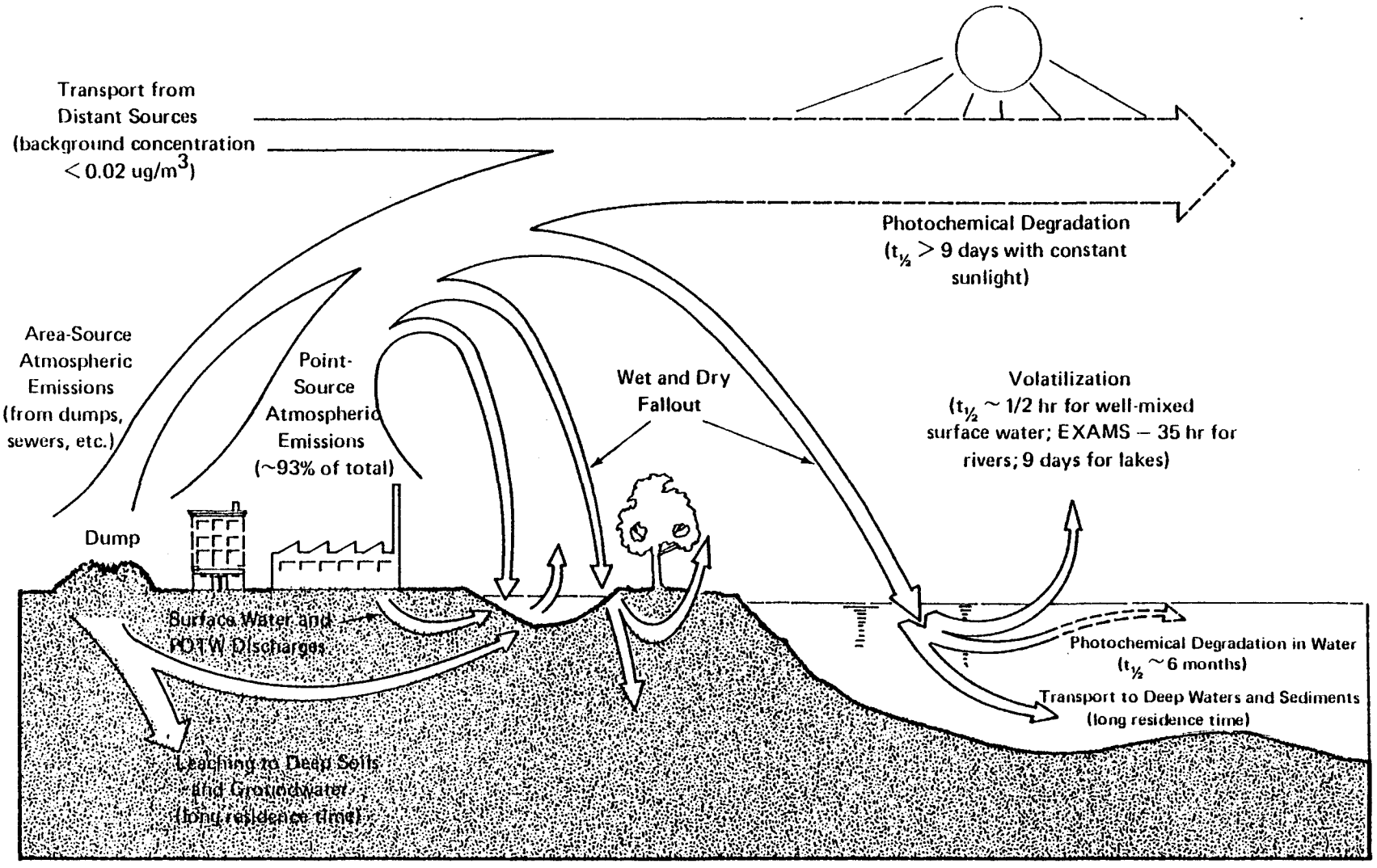

Note: Surface water discharges to large water body not shown for clarity, but should be considered an important pathway.

Source: Arthur D. Little, Inc.

FIGURE 4–1 MAJOR PATHWAYS OF DICHLOROETHANES IN THE ENVIRONMENT

- Point-source discharges to sewers and surface waters (waste solvent from scrubbing gases and water solutions discharged from production facilities).

With one exception, the nature of the waste stream from each type of source is not likely to be very important with regard to the subsequent transport and fate of the compound. The emissions that go directly to air or surface waters usually do not contain any other compounds that will materially affect transport and fate. The one exception is waste sludges from the manufacturer. These wastes will differ significantly in their dichloroethane content, in the nature of the other wastes present, and in the actual manner of disposal. All of these factors may alter the time it takes for the dichloroethane to escape (via volatilization or leaching) from the sludge into other environmental compartments (air, soil, groundwater), and may alter the relative amounts that escape to other compartments, but will not influence the major degradation pathways.

When finally released to the environment, dichloroethane follows a few important transport and degradation pathways (see Figure 4-1). Since the atmospheric lifetime is on the order of nine days, long distance aerial transport (hundreds to thousands of kilometers) is possible; photochemical degradation during sunlight periods is the only significant atmospheric degradation pathway. Minor amounts of dichloroethane may be removed from the atmosphere by wet and dry fallout. Dichloroethane in well-mixed surface waters will volatilize fairly rapidly (half-life $\sim$0.5 hr) into the atmosphere, although EXAMS predicts a volatilization half-life of 35 hours in river water (U.S. EPA 1980b) (see Section 4.3.2.2). Photochemical degradation provides a minor loss pathway and hydrolysis and biodegradation are negligible. The compound can be transported in soils to groundwaters and to sediments and in these compartments it will have a relatively long residence time, perhaps on the order of several years or decades, unless the turnover or mixing time in the compartment is shorter. Chemical, photochemical, and biological degradation play no part in these compartments. The following sections provide a more detailed discussion of the transport and fate in each major environmental compartment.

4.3.2.1 Behavior in Air

Once dichloroethane is in the atmosphere, aerial transport plays a major role in its distribution and leads to its distribution throughout the environment, at least on a regional basis. The compound is, however, subject to relatively rapid chemical or photochemical degradation so that it does not continually accumulate in the atmosphere and does not, itself, reach the upper stratosphere[1] (ozone layer) in sufficient concentrations to affect the ozone concentration (Drury and Hammons 1979, Fishbein 1980).

---

[1]This may not hold true for some of the degradation products, monochloroacetyl chloride, formyl chloride, and chloroacetic acid.

Tropospheric attack on dichloroethane may be by oxygen atoms, hydroxyl free radicals, or ozone molecules; principal reaction products from tropospheric degradation (Table 4-9) would include monochloroacetyl chloride, chloroacetic acid, formyl chloride, phosgene, chlorine, hydrogen chloride, and other chemical species. Rates of reaction, or associated half-lives, for a number of these reactions (under laboratory conditions) are shown in Table 4-9. These data indicate that a wide range of tropospheric half-lives, from minutes to years, have been estimated.

It is possible that a fraction of dichloroethane in the atmosphere may be associated with water droplets and dust particles, especially organic particles. The compound's solubility and high vapor pressure suggest this route is possible. From the atmosphere, dichloroethanes could enter the hydrosphere by direct transfer (dry impact), washout by rain, or dry fallout of particles with adsorbed dichloroethane. Processes are discussed in more detail in Section 4.3.3.1.

4.3.2.2 Behavior in Water

Chemical Processes

Dichloroethane undergoes hydrolysis very slowly in the presence of water. Most 1,2-dihalogen alkanes are resistant to hydrolysis, and the half-life of 1,2-dichloroethane in water at pH 7 has been estimated to be 50,000 years (Drury and Hammons 1979). The 1,1-isomer may hydrolyze faster (1,1,1-trichloroethane has a half-life of 6 months), but this mechanism is not expected to be the dominant fate pathway.

Oxidation by alkoxy radicals in water may contribute somewhat to the degradation of 1,2-dichloroethane. However, because of the small concentration of these radicals in water, the rate will be slow. Drury and Hammons (1979) estimated that the half-life of the 1,2 isomer from oxidation by RO_2 radicals in water would exceed six months. Versar, Inc. (1979) reports that oxidation of other low molecular-weight chlorinated hydrocarbons proceeds at a rate such that the half-life is 6-18 months. In any event, oxidation will not be the dominating degradation route for 1,1- and 1,2-dichloroethane.

The main process for the removal of dichloroethanes from shallow surface waters is volatilization (Dilling *et al*. 1975). Laboratory experiments have measured the rates of evaporation from a stirred beaker (250-ml beaker, 1 mg/l of the compound in 200 ml water, solution depth 6.5 cm, still air, 25°C, stirred at 200 rpm) yielding a half-life for volatilization of 29 minutes for the 1,2-isomer and 22 minutes for the 1,1-isomer (Dilling *et al*. 1975). Other low molecular-weight chlorinated hydrocarbons, upon exposure to intermittent stirring every 5 minutes, vaporized at a rate such that the half-life exceeded 90 minutes. A vaporization experiment of compounds analogous to 1,2-dichloroethane in a simulated sea water noted a decrease in the rate of volatilization by about 10% (Dilling *et al*. 1975).

TABLE 4-9. TROPOSPHERIC HALF-LIFE OF DICHLOROETHANES

Half-Life	Route of Degradation	Reference
3-4 months	Light	Drury and Hammons (1979)
9 days	HO radical (estimated)	Drury and Hammons (1979)
0.75-1.3 years	HO radical	Fishbein (1980)
1.7 minutes[a]	Cl_2 and uv light	Spence and Hanst (1978)
5.4 minutes[b]	Cl_2 and uv light	Spence and Hanst (1978)
1.5 months to get [1/e][a]	HO radical	Versar, Inc. (1979)

[a]1,1-dichloroethane
[b]1,2-dichloroethane

The evaporation rates for analogues of dichloroethanes were measured under conditions more nearly like those found in the environment. Addition of various substances (clay, limestone, sand, salt, peat moss, and kerosene) to the water had relatively little effect on the evaporation rate. However, an increase in the wind speed across the top of the beaker from 0 ± 0.2 mph to 2.2 ± 0.1 mph caused a significant increase in the evaporation rate; after 20 minutes, the solute evaporation was about 17% greater with the higher wind (Dilling et al. 1975).

Biological Processes

Microbial biodegradation of 1,2-dichloroethane has been observed, although usually at relatively low rates. Table 4-10 presents the results of several laboratory tests measuring the biological degradation of the compound.. All of the quantitative microbial tests are of a very simple type (e.g., BODs, static flask), and are not very conducive to degradation compared to other tests using shake flasks or chemostats. Therefore, increased rates of degradation are possible under better conditions. However, these simple tests show either no degradation or slow rates (18% in 10 days) in non-acclimated populations and higher rates (62% in 1 week) in acclimated populations.

The only biodegradation test available on 1,1-dichloroethane, a static flask study (Tabak et al. 1980), reported a loss rate about 10% more rapid than for 1,2-dichloroethane. Part of the loss, however, was attributed to volatilization; 19% volatilized in 10 days (compared to 4% loss for 1,2-dichloroethane).

Two factors may contribute to a low environmental biodegradability of dichloroethanes: their high volatility and the fact that they are not naturally occurring. Their short residence time in water makes the likelihood of adequate time for microbial adaptation unlikely. In locations of continual discharge, acclimation may take place, although, according to the limited data available on biodegradation, volatilization may account for most of the dichloroethane loss.

It has been suggested that microorganisms may take part in the second of a two-step biodegradation process involving 1,2-dichloroethane (McConnell et al. 1975). The first step would involve higher organisms metabolizing the compound to chlorinated acetic acids (e.g., monochloroacetic acid and 2-chloroethanol) which in turn are susceptible to microbial utilization. Whether or not fish and other higher aquatic species are capable of this first step has not been investigated, so the environmental significance of this relationship remains to be substantiated.

Fish and shellfish have a low propensity for bioaccumulation of 1,2-dichloroethane. The only laboratory study investigating this subject in fish and oysters found rapid uptake of ^{14}C-labelled 1,2-dichloroethane and depuration on removal to clean water (Pearson and McConnell 1975). The U.S. EPA (1978) reported a steady-state bioconcentration factor of 2 using bluegills.

TABLE 4-10. BIODEGRADABILITY OF DICHLOROETHANES

Type of Test	Result	Reference
	1,2-Dichloroethane	
Static culture flask with acclimated activated sludge population	Slow to moderate degradation following acclimation, 62% degraded in 7 days	Tabak *et al*. (1980).
BOD_{20} with non-acclimated freshwater population from wastewater	0% degraded in 5 days, 18% degraded in 10 days	Price *et al*. (1974)
BOD_{20} with non-acclimated sea water population in salt water	7% degraded in 15 days, 15% degraded in 20 days	Price *et al*. (1974)
BOD_{20}	0% degraded	Pearson and McConnell (1975)
Bioaccumulation study (with ^{14}C) with fish and oysters, then transferred to clean water	Some *in vivo* metabolism of the compound by fish and oysters indicated by an unaccountable loss from the tissue	Pearson and McConnell (1975)
	1,1-Dichloroethane	
Static culture flask with acclimated activated sludge population	76% lost in 7 days (19% lost to volatilization in 10 days)	Tabak *et al*. (1980)

In a monitoring survey of aliphatic hydrocarbon concentrations in marine biota (at several tropic levels) in a polluted industrial region of England, Pearson and McConnell (1975) found no dichloroethanes.

Observations of the low accumulation levels of dichloroethanes are supported by the estimation method for bioaccumulation used by Neely and coworkers (1974). Both dichloroethanes have low log octanol/water partition coefficients ($\sim$ 1.48), indicating a low affinity for biotic tissue (Versar, Inc. 1980).

EXAMS Model Results

The EXAMS model, AETOX 1 (U.S. EPA 1980b), was implemented to examine the potential fate of 1,1- and 1,2-dichloroethane in aquatic environments. Three prototype systems were tested for each compound: eutrophic lake, river, and turbid river.

The data used as input is presented in Table 4-11. More processes influence 1,1,-dichloroethane levels than the 1,2 isomer. Additionally, 1,1-dichloroethene is less soluble, has a higher Henry's law coefficient, and has a faster rate of volatilization.

A loading rate of 0.1 kg/hr was used for the model. This was estimated for 1,2-dichloroethane, but for lack of other data was also applied to 1,1-dichloroethane. The effluent is intended to represent a dichloroethane production facility.

Some of the results of the model are presented in Table 4-12. There was relatively little difference between the compounds in terms of concentrations in the water column (on the order of 10^{-2} mg/l in the lake and 10^{-4} mg/l in the rivers) and the ratio of percent volatilized to percent transported out from the system. In the lake, more than 93% of the load was lost to volatilization. In both rivers, the dominant loss mechanism (> 98%) was physical transport out of the system (a 1-km long river stretch).

In terms of accumulation in both biota (not included on table) and sediment, 1,1-dichloroethane had a slightly higher tendency for uptake than the 1,2 isomer, although the difference was small. Concentrations in plankton ranged from 0.06 μg/g to 0.65 μg/g in the lake and were approximately one order of magnitude smaller in the river systems. Sediment concentrations were on the order of 10^{-3}-10^{-5} mg/kg in all systems.

The estimated self-purification time, when the discharge was assumed to stop and following the establishment of equilibrium conditions, was 56 and 64 hours for 1,1- and 1,2-dichloroethane, respectively, in the eutrophic lake. In the river, the times were 9 and 6 hours, respectively; in the turbid river, the times were slightly less, 6 and 5 hours, respectively.

TABLE 4-11. CHEMICAL PROPERTIES AND RATE CONSTANTS USED AS INPUT TO EXAMS MODEL

Property	1,1-Dichloroethane	1,2-Dichloroethane
Molecular weight, g/mole	98.96	98.98
Solubility, mg/l	5500	8690
Liquid-phase transport resistance, unitless ratio	0.58	0.58
Henry's law coefficient, $atm \cdot m^3/mole$	4.26×10^{-3}	9.14×10^{-4}
Vapor pressure, torr	180	61
Partition coefficients,		
Biomass/water, $\frac{\mu g/g}{mg/l}$	10.4	5
Sediment/water, $\frac{mg/kg}{mg/l}$	34.7	16.6
Octanol/water, $\frac{mg/l}{mg/l}$	63.0	30
Chemical oxidation, mole/l/hr	1	1
Hydrolysis rate, mole/l/hr	1.15×10^{-7}	0

Source: SRI (1980).

TABLE 4-12. RESULTS OF EXAMS MODEL RUNS[a,b]

Prototype System	Maximum Concentration		Percent Transformed			Self-purification Time (hr)[c]	t 1/2 (hr)
	Water (mg/l)	Sediment (mg/kg)	Chemical or Biological Degradation	Volatilization	Physical Transport		
			1,1-Dichloroethane				
Eutrophic lake	1.3×10^{-2}	6.5×10^{-4}	0.1	96	4	56	206
River[d]	9.9×10^{-5}	8.8×10^{-5}	0	2	98	9	27[e]
Turbid river	9.9×10^{-5}	7.1×10^{-5}	0	2	98	6	—
			1,2-Dichloroethane				
Eutrophic lake	1.3×10^{-2}	6.5×10^{-2}	2	94	4	64	226
River	9.9×10^{-5}	4.9×10^{-4}	0	2	98	6	27[e]
Turbid river	9.9×10^{-5}	4.9×10^{-4}	0	2	98	5	—

[a] All data simulated by the EXAMS model (see text).

[b] Loading = 0.1 kg/hr for both compounds.

[c] Estimate for removal of ~75% of the toxicant accumulated in system. Estimated from the results of the half-lives for the toxicant in bottom sediment and water columns, with overall cleansing time weighted according to the toxicant's initial distribution.

[d] All river systems are 3/km in length so that physical transport out of the modelled system is dominant loss process.

[e] In a 300-km length of river.

Source: U.S. EPA (1980b).

The ecosystem half-lives for loss of dichloroethane from volatilization are presented in Table 4-13. According to EXAMS, the half-lives for volatilization for both compounds are six times greater in the eutrophic lake than in the river systems. Comparison with total-system half-lives (not specific to any one process) listed in Table 4-12 shows how similar the two numbers are, thus illustrating the importance of volatilization in determining dichloroethane persistence.

Since most of the dichloroethane discharged to river environments was transported out before transformation was significant and due to the likelihood of actual release to rivers, the EXAMS model was implemented to examine losses in a longer river reach. The purpose was to determine at what distance downstream from a point source, a significant amount of the chemical would have volatilized.

Figure 4-2 shows a plot of percent loss of 1,1-dichloroethane due to volatilization over some distance downstream from the initial point of release to a river system. At approximately 200 km downstream, most of the release (under equilibrium conditions) was lost through volatilization to the atmosphere. Ninety percent was lost by approximately 900 km downstream. Therefore, even though volatilization is a significant transfer process from water to air, the dichloroethane discharges may travel a significant distance downstream (in this case in a river with a flow rate 2.4×10^7 m^3/day) before they are reduced to negligible levels. Since there was relatively little difference in the rate of volatilization between the two isomers (see Table 4-12), it is assumed that these results are fairly representative of 1,2-dichloroethane as well as 1,1-dichloroethane.

4.3.2.3 Behavior in Soils and Sediments

The movement of dichloroethanes through soils or sediments has not been extensively studied, although movement would clearly be possible as a result of leaching (transport in solution) and/or volatilization (transport in the vapor phase in unsaturated soils). Dilling and coworkers (1975) showed that little adsorption onto clay, limestone, sand, and peat occurred for low molecular-weight chlorinated hydrocarbons. Sansone and coworkers (1979) passed 1,2-dichloroethane vapor through a column of activated carbon and found that about 0.6 g of the compound was adsorbed per gram of carbon. It may be presumed that, when water is present, a partitioning exists between the two phases, which may or may not be at equilibrium (octanol/water partition coefficient = 1.48). Chemical degradation would occur very slowly, and the compound would be expected to persist in deep soils and groundwaters.

There is little information available on the biodegradation of dichloroethane in soil. The results of simple non-soil biodegradation tests (see Section 4.3.2.2) indicate a low susceptibility to microbial attack and a prerequisite period of acclimation by populations before utilization. Due to the apparent short residence time of dichloroethane in soil surfaces because of high volatility, a propensity for leaching, and

TABLE 4-13. VOLATILIZATION t 1/2 FOR DICHLOROETHANES IN EXAMS SYSTEM

	1,1-Dichloroethane	1,2-Dichloroethane
Rivers (300-km reach)	35 hours	-
Eutrophic Lake	9 days	10 days

Source: U.S. EPA (1980b).

TABLE 4-14. 1,2-DICHLOROETHANE RESIDUES IN PLANTS

Crop	Accumulated Level of 1,2-Dichloroethane (mg/kg-wet weight)
Beet roots	0.83-10.41
Beet leaves	0.83-4.17
Corn	11.66-43.75
Grasses	1.25-64.54

Source: Khramova and Zhirnov (1973).

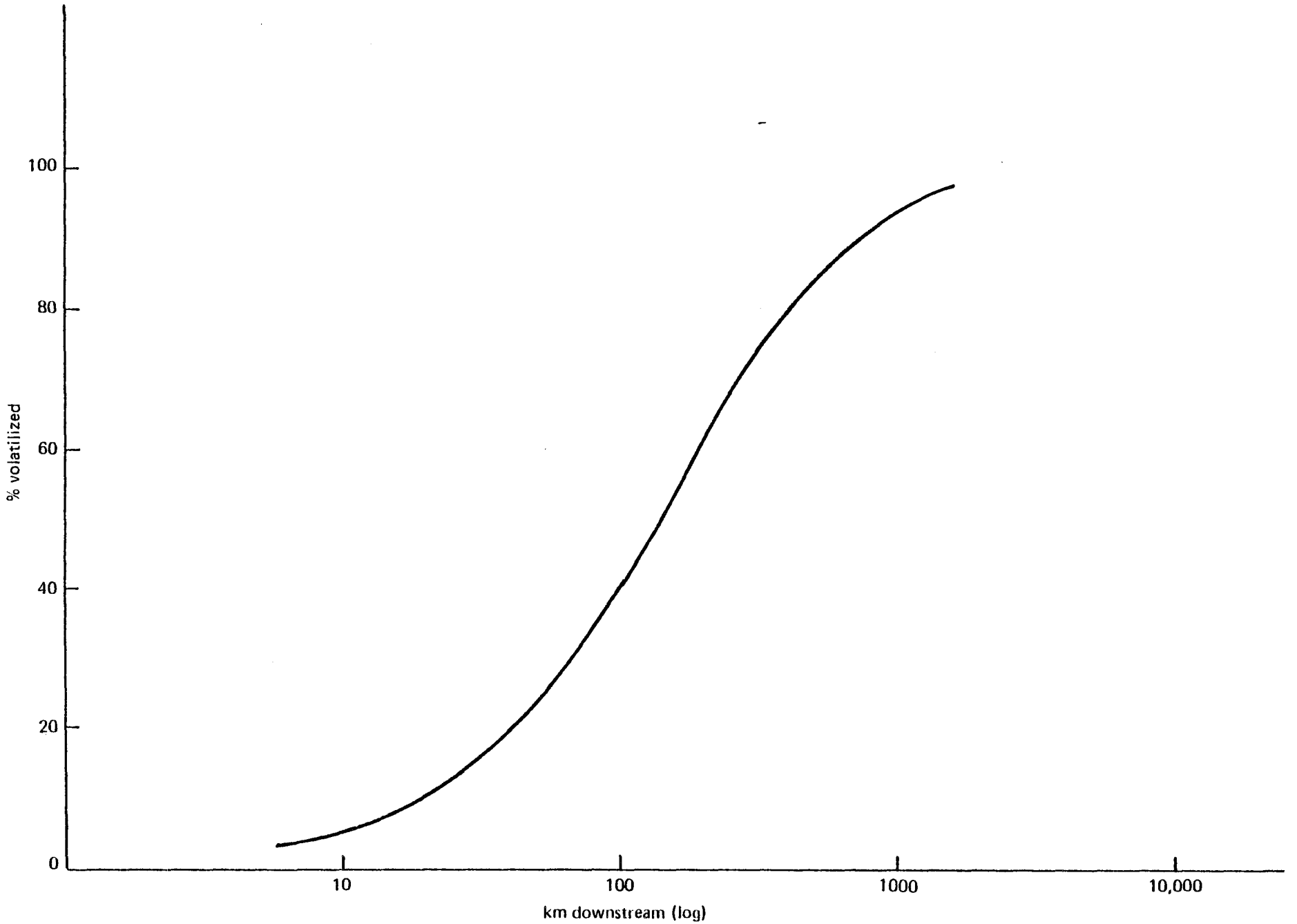

Source: Arthur D. Little, Inc., based on U.S. EPA (1980 b).

FIGURE 4–2 PERCENT VOLATILIZATION OF 1,1-DICHLOROETHANE AS A FUNCTION OF DISTANCE DOWNSTREAM FROM SOURCE

low adsorption, the compound will most likely not persist long enough in one place to support acclimation. Soil regions where persistence may occur do not support significant biodegradation due to anaerobosis and small population sizes

Wilson and coworkers (1980) studied the transport of 1,2-dichloroethane in sandy soil with low organic-matter content. No degradation was observed, and movement through the soil column was rapid, with 37-61% found in the column effluent. About 72-74% of the amount added was reported to have volatilized, although this was thought to be overestimated since more than 100% of the compound applied was recovered. The authors concluded that 1,2-dichloroethane moved readily through sandy soil.

In addition to volatilization and leaching, dichloroethanes may be bioaccumulated from soil. Only one study was available concerning accumulated levels of 1,2-dichloroethane in plants. As shown in Table 4-14, Khramova and Zhirnov (1973) found high residues (up to 65 mg/kg) in crop plants irrigated with industrial effluent water containing the compound (in addition to other chlorinated compounds). Following cessation of irrigation, the beet roots took 20 days to eliminate all of the compound, while the beet leaves and other plants took 10-12 days. The slow elimination rate in roots suggested a potential human exposure route through similar crops exposed to contaminated water.

4.3.3 Fate of Dichloroethanes Discharged from Major Sources

4.3.3.1 Air Emissions from Major Petrochemical Plants

Emissions estimates for dichloroethanes (primarily 1,2-dichloroethane) indicate (see Chapter 3.0):

- About 96% ($\sim$ 28,000 kkg/yr) of total U.S. emissions go directly to the air.
- About 80% of these direct air emissions are from large petrochemical plants in the Gulf Coast area of Texas and Louisiana. An additional 8% are from large petrochemical plants in Kentucky, California, and Puerto Rico.
- Altogether there are about 20 plant sites involved in the production of 1,2-dichloroethane (i.e., petrochemical plants), 16 of which are in Texas and Louisiana.

These facts underscore the need to examine the fate of dichloroethanes discharged to the air in the Gulf Coast area. The fate of the compounds is linked to the meteorological conditions in these areas as well as to the compound's properties.

Some basic data on the meteorological conditions in the areas where these petrochemical plants are located are given in Table 4-15. These data show that the Gulf Coast climate is:

TABLE 4-15. METEOROLOGICAL CONDITIONS NEAR MAJOR PETROCHEMICAL PLANTS PRODUCING DICHLOROETHANES[a]

Location	Avg. Air Temp. (°F)	Yearly Precipitation (in.)	Relative Humidity (%)	Avg. Wind Speed (mph)	Prevailing Wind Direction[b]	Days with Precipitation of 0.01 in. or More	Number of Cloudy or Partly Cloudy Days	Percent of Possible Sunshine
Galveston, TX	69.8	42.2	72-83	11.0	NA[c]	96	NA	64
Houston, TX	68.9	48.2	61-91	7.4	SSE	107	269	57
Lake Charles, LA	68.3	55.5	63-90	8.8	S	95	270	NA
Baton Rouge, LA	67.4	54.0	59-88	8.0	SE	106	266	NA
New Orleans, LA	68.3	56.8	63-88	8.4	NA	113	254	59
Evansville, IN[d]	56.0	41.9	59-81	8.3	SSW	115	264	62
Long Beach, CA	63.3	10.2	53-78	6.4	WNW	29	213	NA
Santa Isabel, PR[e]	76.7	32.6	62-82	6.4	SE	99	260	NA

[a] Data are yearly averages covering the period from 1941 to 1970.

[b] Direction from which the wind blows.

[c] NA = Not Available

[d] Surrogate for petrochemical sites in Kentucky.

[e] Base period is 1921 to 1950.

Source: Gale Research Company (1978).

- Warm (average air temperatures 68°F [20°C])
- Humid (relative humidity 60-90%)
- Frequently cloudy (cloudy or partly cloudy on about 75% of the days; about 60% of the possible sunshine is received)
- Rainy (annual precipitation is in the range of 42-57 in./yr [∿110-140 cm/yr]; measurable rain falls on about 100 days each year [i.e., it rains, on average, once every 3-4 days])
- Not extremely windy (average wind speeds are 7-11 mi/hr [12-18 km/hr], and the winds are usually from the south)

The above data indicate three basic impacts on the fate of dichloroethanes released to the air by the Gulf Coast petrochemical plants. First, the chemicals will (on most days) be transported to the north over land and populated areas. Emissions from one particular day could reach the populated areas of the Midwest and Northeast within 4-5 days, although atmospheric mixing, washout, and photodegradation will have lowered the concentrations significantly.

Second, atmospheric losses due to washout by rain could be a transport pathway. The frequent and heavy rains in the area, in combination with the appreciable solubility of the compounds (∿9000 mg/l for 1,2-dichloroethane and ∿5000 mg/l for 1,1-dichloroethane), will favor removal. However, a significant fraction of the compound may reenter the atmosphere within a few hours after a rainfall. In areas where the rain is quickly absorbed by soils, transport of dichloroethanes to groundwaters will be possible.

Third, the primary degradation pathway, reaction with photochemically produced hydroxyl radicals, will be of little importance for newly released dichloroethanes. In part, this is due to the high percentage of cloudy (or partly cloudy) days which will tend to reduce the concentration of hydroxyl radicals beneath the cloud cover. (The concentration of these radicals falls to essentially zero in darkness.) However, even with full sunlit days, one would not expect significant losses of newly released dichloroethanes during their initial passage over the North American continent. If the atmospheric half-live, due to reaction with hydroxyl radicals, was as short as 9 days, less than 10% of the material released in the Gulf Coast area would have been degraded within the time required for these emissions to reach the Midwest and Northeast portions of the United States.

Suta (1979) utilized dispersion modeling to estimate concentrations of 1,2-dichloroethane in air in the vicinity of producers of the compound as well as producers that use 1,2-dichloroethane as a feedstock.

Table 4-16 summarizes the one-hour average downwind atmospheric concentrations estimated using rough-cut Gaussian-plume techniques. As shown in Table 4-17, the average annual modeling results obtained agreed fairly well with the monitoring data collected for three sites by PEDCo Environmental, Inc. (1980).

4.3.3.2 Air Emissions from 1,2-Dichloroethane in Automobile Gasoline

Suta (1979) has considered the fate of 1,2-dichloroethane in gasoline by analogy to dispersion modeling done for benzene, and several different scenarios:

- concentrations at service stations,
- concentrations in the vicinity of service stations, and
- general urban concentrations resulting from this source.

This same author utilized monitoring data for benzene in the breathing zone for persons filling their tanks and evaporation rates for 1,2-dichloroethane and benzene to estimate the concentration of 1,2-dichloroethane. Based on limited data, a range of 1-16 $\mu g/m^3$ was calculated.

Suta (1979) also utilized dispersion modeling for benzene in the vicinity of gas stations to estimate 1,2-dichloroethane concentrations. Table 4-18 summarizes the results obtained. There are no monitoring data with which to compare these results.

Dispersion modeling for benzene was also used to estimate concentrations in urban areas due to evaporation of 1,2-dichloroethane from automobiles. The results showed annual average 1,2-dichloroethane concentrations of 0.04-0.12 $\mu g/m^3$ from this source. Monitoring data in heavily trafficked areas in three cities, as described in Section 4.2.2, showed levels of 0.03-0.05 $\mu g/m^3$, not inconsistent with the modeling results (Suta 1979).

4.3.3.3 Water Discharges from Petrochemical Plants

Although the aquatic releases of dichloroethanes are thought to be low (see Chapter 3.0), they occur in a relatively concentrated area. These discharges presumably go from the facilities' wastewater treatment plants to nearly surface waters (rivers, estuaries, bays), all of which discharge into the Gulf of Mexico.

It is expected that the majority of the dichloroethanes in these discharges would volatilize (and thus add to the regional atmospheric burden) in a relatively short time (hours to days). These compounds have a relatively low tendency to adsorb on suspended sediments and thus transport to, and accumulation in, the bottom sediments

TABLE 4-16. ESTIMATED ONE-HOUR AVERAGE DOWNWIND ATMOSPHERIC CONCENTRATIONS OF 1,2-DICHLOROETHANE[a]

Downwind Distance (km)	Point Source Emitter ($\mu g/m^3$)[b]	Emitter with 0.0625-km^2 Area ($\mu g/m^3$)[c]	Emitter with 0.01-km^2 Area ($\mu g/m^3$)[c]
0.30	3400	4000	10,000
0.45	4800	3400	7700
0.60	4400	2900	5700
0.75	3700	2500	4300
1.00	2700	2000	2900
1.25	2100	1600	2200
1.60	1500	1200	1600
2.50	800	720	810
4.00	410	380	410
6.00	230	220	220
9.00	120	120	120
14.00	66	64	66
20.00	39	39	39

[a]Assumes an emission rate of 100 g/sec for each source, neutral ("D") stability atmospheric conditions with a wind speed of 4 m/sec.

[b]Single stack 25 m high.

[c]Effective emission height of 10 m.

Note: Modeling data provided by P. Youngblood (U.S. EPA 1978).

Source: Suta (1979).

TABLE 4-17. COMPARISON OF 1,2-DICHLOROETHANE MONITORING AND MODELING ATMOSPHERIC CONCENTRATIONS

Distance (km)	Monitoring Average Concentrations[a] ($\mu g/m^3$) Calvert City[b]	Lake Charles[b]	New Orleans	3-Location Average	3-Location Modeling Average[a]
0.7-1.0	8.1	149	25.5	60.7	55.0
1.1-1.5	c	24.3	5.7	15.0	36.9
1.6-2.0	4.0	28.3	6.5	12.5	26.3
2.1-3.0	8.5	4.4	2.8	5.3	17.4
3.1-4.0	3.6	c	1.2	2.4	8.5
4.1-5.0	c	c	c	c	6.5
5.1-6.0	c	c	3.6	3.6	4.9
14.0	c	c	2.4	2.4	1.6

[a] Data are the average 24-hr concentrations over 10-13 days for monitoring and estimated annual averages for modeling.

[b] The 1,2-dichloroethane emissions have been estimated as 72.9 g/sec for The B.F. Goodrich Co., Calvert City, KY; 70.2 g/sec for CONOCO, Inc., Lake Charles, LA; and 119.5 g/sec for Shell Oil Company, New Orleans, LA.

[c] Indicates that no monitoring data were collected.

Source: Suta (1979).

TABLE 4-18. ROUGH DISPERSION MODELING RESULTS FOR 1,2-DICHLOROETHANE EMISSIONS FOR GASOLINE SERVICE STATIONS[a]

Distance (m)	8-hr Worst Case (ug/m^3)[b]	Annual Average (ug/m^3)[c]
50	49	4.0
100	24	2.0
150	12	1.2
200	8	0.8
300	4	4.0

[a]Assumes a 1,2-dichloroethane emission of 0.01 g/sec during operation.
[b]Assumes continuous operation from 8 AM to 4 PM 6 days per week.
[c]Assumes continuous operation 24 hours per day, 7 days per week.

Note: Modified from Youngblood (1977) by adjusting the evaporation rate of benzene for 1,2-dichloroethane.

Source: Suta (1979).

will be minimal. Little or no chemical, photochemical, or biological degradation can be expected during the brief residence in the surface waters.

4.3.3.4 Land Discharges from Petrochemical Plants

Approximately 900 kkg/yr of dichloroethanes are discharged to land and about 50% of this derives from the petrochemical plants in the Gulf Coast area. Three processes can be expected to play an important role in the fate of this material: volatilization, transport to groundwaters, and biodegradation (especially where the wastes are landfarmed). The relative importance of these pathways cannot be assessed without site-specific information, monitoring data, and/or chemical modeling.

Volatilization will certainly be important for all wastes placed on the surface of the land and the volatilized fraction will then add to the regional atmospheric burden. Volatilization from soils is enhanced by increasing soil moisture, increasing chemical vapor pressure ($\sim$100 torr for 1,2-dichloroethane at 29.4°C), and low adsorption tendencies. All of these factors favor volatilization for the dichloroethanes.

Transport to groundwaters will be facilitated by high soil porosities (common in the Gulf Coast area), the proximity to the groundwater table (most of the plant sites are only 2-10 meters above mean sea level), the small adsorption coefficients associated with these compounds, and the frequent (and heavy) rainfalls.

Biodegradation may be important in top soils with significant microbe populations, and in landfarming areas (i.e., sites where petrochemical wastes are spread on the land for purposes of biodegradation). In the latter case, acclimated microbes are likely to be present. Tests conducted by Tabak and coworkers (1980) (discussed in Section 4.3.2.2 above) indicate that dichloroethanes may undergo biodegradation (by sewage organisms) after a period of adaption.

4.3.3.5 Fate of 1,2-Dichloroethane Discharged to Sanitary Sewers

The wastewaters generated by the manufacture of 1,2-dichloroethane are treated in three ways (see Chapter 3.0). Twelve of 16 plants discharge to surface waters after primary or secondary treatment. Primary treatment consists of neutralization and chemical treatment, and secondary treatment involves activated sludge ponds and aerated lagoons. Eight of the plants steam-strip the wastewater prior to treatment. Two of the plants discharge directly to POTWs. Other POTWs in the United States may receive small amounts of 1,2-dichloroethane from miscellaneous sources.

However, a large portion of the 1,2-dichloroethane may never reach the POTW. Thomas (1980) reported that the overall mass transfer coefficient (K_L) for the 1,2 isomer was 17.1 cm/hr, very close to the value reported for chloroform, 18.2 cm/hr. In the sewer system

and in treatment one can expect 75-95% loss of 1,2-dichloroethane due to volatilization.

Both 1,1- and 1,2-dichloroethane may be biodegraded in activated sludges after a period of adaption by the microbes. Tabak and coworkers (1980) found that the 1,1 and 1,2 isomers were biodegraded following acclimation by sewage organisms in a static culture flask biodegradation study. The results are discussed in greater detail in Section 4.3.2.2 under Biological Processes. No information was available on the biological degradation of either compound in POTWs.

The tendency for 1,2-dichloroethane to adsorb to sewage sludges is low. The adsorption coefficients (Koc) for 1,1- and 1,2-dichloroethane are 35 and 17, respectively (SRI 1980). A Koc value of 50 determined for a carbamate pesticide resulted in less than 2% being removed in the sludge for a hypothetical treatment plant. One may assume even less of the dichloroethanes will be associated with the sludge.

Burns and Roe (1979), in their investigation of 20 POTWs, found undetectable levels of both 1,1- and 1,2-dichloroethane in the final effluents. Detection limits ranged from 1-5 μg/l. Levins and coworkers (1979) found similar results in their investigations of 4 POTWs.

4.4 SUMMARY

Concentrations of 1,2-dichloroethane in surface waters range up to 230 μg/l, although almost all are below the detection limit of 10 μg/l. The 1,1 isomer was reported at levels up to 1900 μg/l, again with most levels less than 10 μg/l.

The background level of 1,2-dichloroethane in air appears to be less than 0.02 $\mu g/m^3$. Levels in heavily industrialized areas appear to be in the range of 1-5 $\mu g/m^3$. Maximum concentrations of 1,2-dichloroethane in the vicinity of production facilities range from 70-500 $\mu g/m^3$.

Dichloroethanes have an atmospheric lifetime on the order of 9 days, allowing long-distance aerial transport. Photochemical degradation during sunlight periods is the only significant degradation pathway.

Dichloroethanes in well-mixed surface waters will volatilize fairly rapidly. Modeling results suggest that they can be carried a considerable distance downstream, although concentrations may be considerably reduced due to dilution. Other chemical and biological processes do not appear to influence the ultimate fate of these compounds.

Little information is available on the fate of dichloroethanes in soil, although volatilization is certainly likely. Rapid movement through the soil column has been shown in sandy soil; however, the fate of dichloroethanes in soils of higher organic content has not been studied. Considering their low affinity for adsorption, however, movement is likely to be rapid.

With respect to specific types of releases, dichloroethanes released by the Gulf Coast petrochemical plants will generally be transported north over populated areas. Atmospheric losses due to washout could occur in this area due to the frequent and heavy rains, although subsequent volatilization is likely to occur. Photochemical degradation will be of less importance due to the high percentage of cloudy days in the area.

Land-disposed dichloroethanes from petrochemical facilities will be subject to volatilization. Transport to groundwater will be facilitated by the porous soil found in the area, the proximity to the water table, and the frequent and heavy rainfalls.

REFERENCES

Archer, W.L. Chlorocarbons and chlorohydrocarbons -- survey. In Kirk-Othmer Encyclopedia of Chemical Technology, 3rd Edition. Vol. 5. New York, NY: Interscience Publishers; 1979: 686-676.

Baird, R.; Selna, M.; Haskins, J.; Chappelle, D. Analysis of selected trace organics in advanced wastewater treatment systems. Water Res. 13(6):493-502; 1979.

Bozzelli, J.W.; Kebbekus, B.B. Analysis of selected volatile organic substances in ambient air. Trenton, NJ: New Jersey Department of Environmental Protection; 1979. Available from: NTIS, Springfield, VA; PB 80 14469 4.

Burns and Roe, Inc. Preliminary data for POTW studies. Washington, DC: Effluent Guidelines Division, U.S. Environmental Protection Agency; 1979.

Dilling, W.L.; Tefertiller, N.B.; Kallos, G.J. Evaporation rates and reactivities of methylene chloride, chloroform, 1,1,1-trichloroethane, trichloroethylene, tetrachloroethylene, and other chlorinated compounds in dilute aqueous solutions. Environ. Sci. Technol. 9(9):833-839; 1975.

Drury, J.S.; Hammons, A.S. Investigations of selected environmental pollutants: 1,2-dichloroethane. Washington, DC: Office of Toxic Substances, U.S. Environmental Protection Agency; 1979.

Ewing, B.B.; Chian, E.K. Monitoring to detect previously unrecognized pollutants in surface waters. Report No. EPA 560/6-77-015a. Washington, DC: Office of Toxic Substances, U.S. Environmental Protection Agency; 1979.

Fishbein, L. Production, uses, and environmental fate of ethylene dichloride and ethylene dibromide. Ames, B.; Infante, P.; Reitz, R. eds. In Ethylene dichloride: a potential health risk? Banbury Rep. 5: 227-238; 1980.

Gale Research Company. Climate of the states. Vols. 1 & 2. Detroit, MI: Book Tower; 1978.

Grimsrud, E.P.; Rasmussen, R.A. Survey and analysis of halocarbons in the atmosphere by gas chromatography -- mass spectrometry. Atmos. Environ. 9(11):1014-1017; 1975.

Jacobs, E.S. Use and air quality impact of ethylene dichloride and ethylene dibromide scavengers in leaded gasoline. Conference on ethylene dichloride: economic importance and potential health risks. Cold Spring Harbor, NY: Banbury Conference Center; 1979.

Khramova, S.I.; Zhirnov, B.F. The dynamics of the contents of chloro-organic solvents in plants irrigated with industrial effluents. Gig. Sanit. 38(1):102-103; 1973.

Levins, P.; Adams, J.; Brenner, P.; Coons, S.; Thrun, K.; Harris, G.; Wechsler, A. Sources of toxic pollutants found in influents to sewage treatment plants. VI. Integrated interpretation. Part I. Contract No. 68-01-3857. Washington, DC: U.S. Environmental Protection Agency; 1979.

McConnell, G.; Ferguson, D.M.; Pearson, C.R. Chlorinated hydrocarbons and the environment. Endeavor 34(121):13-18; 1975.

Neely, W.B.; Branson, D.R.; Blau, G.E. Partition coefficient to measure bioconcentration potential of organic chemicals in fish. Environ. Sci. Technol. 8:1113-1115; 1974.

Pearson, C.R.; McConnell, G. Chlorinated C_1 and C_2 hydrocarbons in the marine environment. Proc. R. Soc. London B 189:305-322; 1975.

PEDCo Environmental, Inc. Monitoring of ambient levels of EDC near production and user facilities. Research Triangle Park, NC: Office of Research and Development, U.S. Environmental Protection Agency; 1980.

Pellizzari, E.D.; Erickson, M.C.; Zweidinger, R.A. Formulation of a preliminary assessment of halogenated organic compounds in man and environmental media. Washington, DC: U.S. Environmental Protection Agency; 1979. Available from: NTIS, Springfield, VA; PB 80 112170.

Price, K.S.; Waggy, G.T.; Conway, R.A. Brine shrimp bioassay and seawater BOD of petrochemicals. J. Water Pollut. Control Fed. 46(1):63-77; 1974.

Sansone, E.B.; Tewari, Y.B.; Jonas, L.A. Prediction of removal of vapors from air by adsorption on activated carbon. Environ. Sci. Technol. 13(12):1511-1513; 1979.

Shakleford, W.M.; Keith, L.H. Frequency of organic compounds identified in water. Report No. EPA 600/4-76-062. Athens, GA: Environmental Research Laboratory, U.S. Environmental Protection Agency; 1976.

Singh, H.B.; Salas, L.J.; Smith, A.; Stiles, R.; and Shigeishi, H. Atmospheric measurements of selected hazardous organic chemicals. Second Year Interim Report. Grant 805990. Research Triangle Park, NC: U.S. Environmental Protection Agency; 1980.

Spence, J.W.; Hanst, P.L. Oxidation of chlorinated ethanes. J. Air Pollut. Control Assoc. 28(3):250-253; 1978.

Stanford Research Institute (SRI). Estimates of physical-chemical properties of organic priority pollutants. Preliminary draft. Washington, DC: Monitoring and Data Support Division, U.S. Environmental Protection Agency; 1980.

Suta, S.B. Assessment of human exposures to atmospheric ethylene dichloride. Research Triangle Park, NC: Office of Air Quality Planning and Standards, U.S. Environmental Protection Agency; 1979.

Tabak, H.H.; Quaves, A.; Mashni, C.I.; Barth, E.F. Biodegradability studies with priority pollutant organic compounds. Cincinnati, OH: Environmental Research Laboratory, U.S. Environmental Protection Agency; 1980.

Thomas, R.G. Volatilization from water. DAND 171-78-C-8073. Monthly Progress Report No. 18. Fort Dietrich, MD: U.S. Army Medical Research and Development Command; 1980.

U.S. Environmental Protection Agency (U.S. EPA). Chlorinated ethanes. Ambient water quality criteria. Washington, DC: Office of Water Planning and Standards, U.S. Environmental Protection Agency; 1978.

U.S. Environmental Protection Agency (U.S. EPA). Exposure analysis modeling System AETOX 1. Athens, GA: Environmental Systems Branch, Environmental Research Laboratory, Office of Research and Development, U.S. Environmental Protection Agency; 1980b.

U.S. Environmental Protection Agency (U.S. EPA). STORET. Washington, DC: Monitoring and Data Support Division, U.S. Environmental Protection Agency; 1980a.

Versar, Inc. 1,1-Dichloroethane: statement of probable fate. Callahan, M.A.; Slimak, M.W.; Gabel, N.W.; May, I.P.; Fowler, C.F.; Freed, J.R.; Jennings, P.; Durfee, R.L.; Whitmore, F.C.; Maestri, B.; Mabey, W.R.; Holt, B.R.; Gould, C. Water-related environmental fate of 129 priority pollutants. I. Report No. EPA-440/4-79-029a. Washington, DC: Monitoring and Data Support Division, U.S. Environmental Protection Agency; 1979.

Versar, Inc. Non-aquatic fate of 1,1-dichloroethane. Contract No. 68-01-3852. Springfield, VA; 1980.

Wilson, J.T.; Enfield, C.G.; Dunlap, W.J.; Cosby, R.L.; Foster, D.A.; Baskin, L.B. Transport and fate of selected organic pollutants in a sandy soil. Ada, OK: Robert S. Kerr Environmental Research Laboratory, U.S. Environmental Protection Agency; 1980.

Youngblood, P.L. Use of dispersion calculations in determining population exposures to benzene from chemical plants. Memo. Washington, DC: U.S. Environmental Protection Agency; 1977.

5.0 EFFECTS AND EXPOSURE -- HUMANS

5.1 HUMAN TOXICITY

5.1.1 1,2-Dichloroethane

5.1.1.1 Metabolism and Bioaccumulation

The 1,2 isomer is readily absorbed by inhalation or ingestion and somewhat less so by dermal exposure. Mammalian metabolism of 1,2-dichloroethane is not well understood. Little human data are available, but most mammals, and probably man, are believed to rapidly transform 1,2-dichloroethane to 2-chloroethanol and chloroacetic acid (ORNL 1979).

Yllner (1971) injected female albino mice intraperitoneally with 50-170 mg/kg ^{14}C 1,2-dichloroethane in 10% olive oil and followed the elimination of radioactivity for 3 days. Greater than 90% of the radioactivity was excreted within 24 hours of injection, with the pattern of excretion dependent on dose. Some 10-42% of the dose was expired unchanged, 12-15% was expired as carbon dioxide, 51-73% was excreted in urine, 0-0.6% in feces, and 0.6-13% remained in the carcass. The urine contained three major metabolites: chloroacetic acid (6-23%), S-carboxymethylcysteine (44-46%, free; 0.5-5% conjugated), and thiodiacetic acid (33-34%).

Spreafico and coworkers (1980) studied the distribution and persistence of 1,2-dichloroethane administered to Sprague-Dawley rats over a range of dosages and concentrations by the intravenous, oral, and inhalatory routes. Intravenous injection of 1, 5, or 25 mg/kg 1,2-dichloroethane resulted in rapid, biphasic disappearance from blood by 30, 60, and 120 minutes post-dosing, respectively. The steepness of the second or beta phase decreased with an increase in dose, indicating a dose-dependence for disappearance from blood and suggesting that elimination of the compound may be a saturable process. Data for the brain, kidney, and spleen were essentially superimposable on those for the 1,2-dichloroethane blood levels.

Oral administration of 25, 50, or 150 mg/kg of 1,2-dichloroethane resulted in rapid absorption. Major tissue accumulation occurred in the liver, with peak concentrations reached within 10 minutes of administration. Disappearance from the liver was rapid following a biphasic, biexponential curve the second component of which was practically equivalent to the disappearance curve of the compound from the general circulation. The level of the compound in the lung appeared to be in equilibrium with that in the blood, although levels were at all times lower, presumably due to expiration of the compound. Accumulation in adipose tissue was slower, with peak levels reached 45-60 minutes post-dosing. These levels were approximately 5 times higher at the 50 and 150 mg/kg doses

than those in blood. Disappearance from adipose tissue was monophasic and essentially equivalent in rate to that of blood. The curve relating peak blood levels and dose administered appeared linear up to 50 mg/kg, with a perceptible decrease in steepness thereafter, possibly indicating a relative saturation in gastrointestinal absorption at doses of 100-150 mg/kg. Peak blood levels for the 25, 50, and 150 mg/kg doses were 13.3, 31.9, and 66.8 μg/ml, respectively. No significant differences in kinetic parameters were observed between male and female rats or between single and 10-daily administration of 50 mg/kg 1,2-dichloroethane (Spreafico et al. 1980).

By the inhalation route, steady-state concentrations in the body were reached relatively slowly (2-3 hours), depending on the level of the 1,2 isomer in the atmosphere. A clear dose-dependence of the compound in tissue was seen. Differences on the order of 20-30 times in blood, liver, lung, and adipose tissue existed between exposures to 200 and 1000 mg/m^3 1,2-dichloroethane (e.g., the half-lives for blood in the beta phase were 12 and 22 minutes, respectively, for the above two exposures). The highest absolute levels of the compound were found in adipose tissue, with concentrations 8-9 times greater than those in blood.

Thus, Spreafico and coworkers (1980) found that the elimination curves and relative tissue distribution for oral, intravenous, and inhalation exposure of rats were similar. In all three situations, the highest quantities of 1,2-dichloroethane were seen in adipose tissue, with the lowest area under the curves noted for the lung, most probably because of its rapid respiratory excretion. Dose also appeared to influence kinetic parameters.

In another study, Reitz and coworkers (1980) examined the pharmacokinetics of 1,2-dichloroethane in Osborne-Mendel rats following inhalation of 600 mg/m^3 for 6 hours. Steady-state levels of 8-9 μg 1,2-dichloroethane/ml blood were reached in 2-3 hours and remained constant until termination of exposure, whereupon blood levels fell rapidly. Elimination appeared to be biphasic, with an initial phase having a half-life of 6 minutes and the slower, beta phase, a half-life of 35 minutes. Elimination was virtually completed after 18 hours. Approximately 98% of the dose was excreted as metabolites and 1.8% as unchanged 1,2-dichloroethane. Of the metabolite fraction, 84% was eliminated as one of two unidentified metabolites in urine and 7% was expired as CO_2.

A separate oral balance study with rats given 150 mg 1,2-dichloroethane/kg body weight in corn oil produced many similarities except that peak blood levels of the compound were much higher after oral administration than after inhalation exposure (70 vs. 9 μg/ml). After oral administration, 29% of the dose was eliminated unchanged and 71% as metabolites ($\sim$60% in urine, 1.5% in feces, 5% as CO_2, 3% left in the carcass) (Reitz et al. 1980).

In two recent publications, the enzymatic conversion of 1,2-dichloroethane to ethylene by GSH (glutathione)-dependent rat liver enzymes has been demonstrated (Anders and Livesey 1980; Livesey and Anders 1979). The enzymes catalyzing the formation of ethylene from the compound are predominantly found in the cytosolic fraction of hepatic tissue and are highly dependent on the presence of reduced GSH. This *in vitro* metabolism of the 1,2 isomer to ethylene was inhibited only by those reagents that react with sulfhydryl groups or that are substrates for GSH S-transferases.

Urosova (1953) reported the accumulation and excretion of 1,2-dichloroethane in the milk of nursing mothers occupationally exposed by inhalation and dermal contact. Exposure to $\sim$63 mg/m^3 for an unspecified duration resulted in initial concentrations of 58 mg/m^3 in expired air and 0.58 mg/100 ml in milk; by 18 hours post-exposure, concentrations had dropped to 8-16 mg/m^3 and 0.2-0.6 mg/100 ml, respectively.

In summation, most mammalian species, and presumably man, metabolize 1,2-dichloroethane to 2-chloroethanol and chloroacetic acid. Elimination in rats is biphasic and appears to be dose-dependent, suggesting elimination may be a saturable process. Relative tissue distributions following oral, intravenous, and inhalation exposures are similar except for a markedly higher peak blood value after oral administration in contrast to that noted following inhalation exposure. Regardless of the route of exposure, the highest quantities of the compound are found in adipose tissue. Excretion occurs primarily in urine and expired breath.

5.1.1.2 Human and Animal Studies

Carcinogenicity

Administration of technical grade 1,2-dichloroethane (47 and 95 mg/kg/day, time-weighted average) by gavage to Osborne-Mendel rats for 78 weeks produced elevated incidences of squamous-cell carcinoma of the forestomach, hemangiosarcomas and subcutaneous fibromas in males, and mammary adenocarcinomas in females (see Table 5-1). A concurrent study with B6C3F1 mice given technical grade 1,2-dichloroethane (males: 97 or 195 mg/kg/day; females: 149 or 299 mg/kg/day, time-weighted averages) by gavage for 78 weeks also resulted in positive carcinogenic effects, inducing mammary adenocarcinomas and endometrial tumors in females and alveolar/bronchiolar adenomas in mice of both sexes (see Table 5-2) (NCI 1978a).

Negative results, however, were noted in Sprague-Dawley rats and Swiss mice exposed to concentrations up to 600 mg/m^3 1,2-dichloroethane (99.8% pure) by inhalation for 78 weeks (Maltoni *et al*. 1980). These authors exposed groups of 90 animals of each sex for each species to concentrations of 1000, 200, 40, or 20 mg/m^3 of the compound, 7 hours per day, 5 days per week for 78 weeks. A sham control group received filtered air according to the same treatment regimen and an additional control group remained untreated. The 1000-mg/m^3 concentration was

TABLE 5-1. INCIDENCE OF PRIMARY TUMORS AT SPECIFIC SITES IN MALE AND FEMALE OSBORNE-MENDEL RATS ADMINISTERED 1,2-DICHLOROETHANE BY GAVAGE

Tumor	Sex	Vehicle Controls	Low Dose (47 mg/kg/day)	High Dose (95 mg/kg/day)
Squamous-cell carcinoma of the forestomach	Male	0/20 (0%)	3/50 (6%)	9/50 (18%) $p = 0.039$
Hemangiosarcoma of the circulatory system	Male	0/20 (0%)	9/50 (18%) $p = 0.039$	7/50 (14%)
Subcutaneous fibromas	Male	0/20 (0%)	5/50 (10%)	6/50 (12%)
Mammary adenocarcinoma	Female	0/20 (0%)	1/50 (2%)	18/50 (36%) $p = 0.002$

Source: NCI (1978a).

TABLE 5-2. INCIDENCE OF PRIMARY TUMORS AT SPECIFIC SITES IN MALE AND FEMALE B6C3F1 MICE ADMINISTERED 1,2-DICHLOROETHANE BY GAVAGE

Tumor	Sex	Vehicle Controls	Low Dose (97 mg/kg/day)	High Dose (195 mg/kg/day)
Alveolar/Bronchiolar adenoma	Female	1/20 (5%)	7/50 (14%)	15/48 (31%) p = 0.016
	Male	0/20 (0%)	1/47 (2%)	15/48 (31%) p = 0.003
Mammary adenocarcinoma	Female	0/20 (0%)	9/50 (18%) p=0.039	7/48 (15%)
Endometrial stromal polyps or sarcomas	Female	0/20 (0%)	5/49 (10%)	5/47 (11%)

Source: NCI (1978a).

dropped to 600 mg/m^3 after a few weeks because of severe toxic effects. All animals were allowed to live beyond treatment until spontaneous death occurred. No relevant differences between the types or incidences of tumors were seen for the various treatment groups of Swiss mice. In Sprague-Dawley rats, an increase of nonmalignant mammary fibroadenomas and fibromas which was not correlated with dose was seen in females.

The apparent contradiction of results between the National Cancer Institute (1978a) study and that of Maltoni et al. (1980) could be due to a number of factors including different samples of the compound (and hence purity), different routes of exposure, and/or different animal strains.

The purity issue concerns the use of a 99.8% pure sample of 1,2-dichloroethane in the inhalation work of Maltoni et al. (1980), in contrast to the technical grade sample noted in the NCI (1978a) study. Although the NCI report states that the test sample used was greater than 90% 1,2-dichloroethane, the NCI Chemical Repository indicated a purity of greater than 99.9% for the test sample utilized in the NCI study (Hooper et al. 1980). Retesting of a 7-year-old stock sample indicated a purity between 98.5% and 99.8% with a minor chloroform impurity (0.02%) plus 14 other trace contaminants (Hooper et al. 1980). Therefore, purity of the administered compound does not appear to be a factor.

Differences in response, at least in the rat, also do not appear to be associated with variations in the pharmacokinetics or tissue distribution of 1,2-dichloroethane due to exposure route (Reitz et al. 1980; Spreafico et al. 1980). The effective doses delivered to tissue would be similar whether the compound was administered by gavage or by inhalation except for a transient high concentration in the liver due to the first-pass effect of gavage exposure (Hooper et al. 1980). Furthermore, it has been calculated (based on average daily lifetime doses and 100% absorption) that the two highest doses in the inhalation study were comparable on a mg/kg/day basis to those resulting in positive carcinogenic effect in the gavage study (Hooper et al. 1980). By the calculations of Hooper et al. (1980), the top rat inhalation groups received an average of 48 and 16 mg/kg/day of the 1,2 isomer for their lifespan compared to average doses of 48 and 24 mg/kg/day for rats given the compound by gavage. Another consideration with respect to different routes of exposure is the possibility that the gavage route might result in the production of carcinogenic metabolites of 1,2-dichloroethane by gut flora that would not occur in the lung following inhalation of the compound (Hooper et al. 1980). Toxicity data, however, indicate that similar doses of 1,2-dichloroethane by these two routes produce similar toxic effects (see Section 5.1.1.2 Other Toxic Manifestations).

Sensitivity of test species to carcinogenic induction by chlorinated hydrocarbons may also play a role in the contradictory findings of the NCI (1978a) and Maltoni and coworkers (1980). A report by Banerjee and Van Duuren (1979) noted that the in vitro binding of

1,2-dichloroethane to hepatic microsomal protein from B6C3F1 mice was 6-8 times greater than the corresponding binding for Osborne-Mendel rats. In addition, the covalent binding of the 1,2 isomer to salmon sperm DNA was 5 times greater in the presence of microsomes from male B6C3F1 mice than in the presence of microsomes from male Osborne-Mendel rats. The compound was bound 2.5 times greater to DNA in the presence of microsomes from female mice than from female rats. Furthermore, the binding of the compound to proteins was not significant when denatured microsomes were used, suggesting metabolic activation is required for the compound to covalently bind to macromolecules.

In other related studies, Van Duuren and coworkers (1979) reported the induction of 26 benign lung tumors ($p < 0.0005$) and 3 tumors of the forestomach (2 squamous-cell carcinomas and 1 papilloma) in 30 Ha:ICR Swiss mice by repeated application of 1,2-dichloroethane (126 mg in acetone/mouse 3 times per week) to the dorsal skin for a lifetime. The sample used was reported to show "no marked impurities" by NMR analysis. A separate assay for skin tumor initiation in a two-stage carcinogenesis assay using Swiss mice and phorbol myristate acetate as the promoter was considered negative by Van Duuren and his associates (1979).

Employing a mouse pulmonary tumor induction technique, Theiss and coworkers (1977) were unable to produce a significant number of tumors in strain A mice following thrice weekly intraperitoneal injections of 20, 40, or 100 mg/kg 1,2-dichloroethane (98.96% pure) for 8 weeks. All mice were killed at 24 weeks. However, the negative results in this short-term, whole-animal assay are of limited value and are insufficient evidence that the 1,2 isomer is not carcinogenic.

In summation, there is an apparent contradiction in carcinogenicity findings with 1,2-dichloroethane in rodents. Elevated incidences of squamous-cell carcinoma of the forestomach, hemangiosarcoma, and mammary adenocarcinoma have been observed in Osborne-Mendel rats given 47 or 95 mg 1,2-dichloroethane/kg/day by gavage for 78 weeks. In contrast, Sprague-Dawley rats exposed by inhalation to concentrations of up to 600 mg/m^3, 7 hours per day for 78 weeks exhibited no increased incidence of malignant tumors; an increase of nonmalignant mammary fibroadenomas and fibromas which was not correlated with dose was seen in females, but this increase appeared to be related to decreased group survival rates. Similar contradictory findings have been reported for B6C3F1 mice given 149 (female)-195 (male) mg/kg/day of the compound by gavage and Swiss mice exposed to 600 mg/m^3 by inhalation. No relevant differences in type or incidence of tumors were seen in Swiss mice exposed to 1,2-dichloroethane by inhalation, while gavage administration produced alveolar/bronchiolar adenomas, mammary adenocarcinomas, and endometrial tumors in B6C3F1 mice. Several possible explanations for the disparity of results have been explored, but the issue remains open.

In the absence of adequate data to resolve this perplexing contradiction in carcinogenicity tests, the prudent course of action would be to regard 1,2-dichloroethane as a carcinogenic risk to man. Extrapolation of the lowest reported effect level (47 mg/kg/day in rats) gives an equivalent level of 3.3 g/70 kilo man/day.

Adverse Reproductive Effects

No major malformations were seen in pregnant Sprague-Dawley rats exposed 7 hours per day on days 6-15 of gestation to 400 mg/m^3 1,2-dichloroethane. Marked maternal toxicity occurred in a second group of rats exposed to 1200 mg/m^3 under identical conditions; 63% (10/16) of the dams died at this exposure concentration and implantation sites (all of which were resorbed) were found in only one rat (Rao *et al*. 1980). A second experiment conducted with New Zealand albino rabbits exposed for the same duration and to the same concentration on days 6-18 of gestation resulted in the death of 16% (3/19) of the dams at the 1200 mg/m^3 level and 19% (4/21) of the dams at the 400 mg/m^3 level. Neither exposure, however, appeared to affect the incidence of pregnancy, mean litter size, incidence of resorptions, or fetal body measurements. A single fetus in the lower dose group exhibited external malformation, but these appeared to be unrelated to treatment (Rao *et al*. 1980).

A single-generation two-litter reproduction study with Sprague-Dawley rats exposed to 0, 100, 300, or 600 mg/m^3 1,2-dichloroethane, 6 hours per day, 5 days per week prior to breeding, then 6 hours per day, 7 days per week through gestation and weaning also produced no significant treatment-related effects (Rao *et al*. 1980).

A report in the Russian literature indicates that female rats exposed by inhalation to 57 mg/m^3 1,2-dichloroethane, 4 hours per day, 6 days per week for 6 months prior to breeding and then throughout gestation had a reduced number of live births, a reduced litter size, and reduced fetal pup weights, but that no tissue or skeletal anomalies were evident (Vozovaya 1974). The Russians, therefore, report some fetotoxicity at 57 mg/m^3 1,2-dichloroethane, while Rao and coworkers saw no effects at 600 mg/m^3. However, determination of exposure levels and monitoring techniques utilized behind the Iron Curtain have historically been difficult to verify.

Mutagenicity

Mutagenicity studies with 1,2-dichloroethane suggest that the compound is a weak direct mutagen which, in the presence of an activation system, is converted to a more effective mutagenic species.

Exposure of *Drosophila* to the 1,2 isomer has been shown to result in heritable mutations. Using the sex-linked recessive assay, increased mutations were observed in *Drosophila* exposed to the compound at 4.9 g/l (King *et al*. 1979, Shakarnis 1969, Rapoport 1960). The somatic mutation assay also produced a mutation frequency of 7.21% in larvae exposed to

0.5% 1,2-dichloroethane in their food supply compared to an incidence of 0.045% for untreated controls (Nylander et al. 1978).

The production of mutagenic bile by male CBA mice injected intraperitoneally with 89 mg 1,2-dichloroethane/kg body weight has been demonstrated in Salmonella typhimurium (Rannug and Beije 1979). Similar findings were reported by Jenssen and coworkers (1979) who tested the compound on Chinese hamster V79 cells with perfused rat liver as the metabolizing system. The bile produced, following addition of the compound, was strongly mutagenic, while no effect was noted with the perfusate. The 1,2 isomer is believed to be activated through conjugation with glutathione, which is then excreted in bile. Rannug and Ramel (1978) have reported enhancement of the mutagenic effects of the compound in Salmonella typhimurium in the presence of glutathione S-transferases and glutathione.

Negative results were reported in the micronucleus assay using bone marrow cells from mice injected twice, 24 hours apart, with 396 mg 1,2-dichloroethane/kg intraperitoneally (King et al. 1979). Negative findings were also noted in a host-mediated assay with Escherichia coli in mice injected intraperitoneally with 198 mg 1,2-dichloroethane/kg (King et al. 1979) and in a rec-assay, a bacterial mutagenesis assay, using Bacillus subtilis (Kanada and Uyeta 1978).

Point mutations have been observed in the bacterium Salmonella typhimurium subsequent to exposure to the compound; base pair mutations were induced in strains TA-100, TA-1530 (McCann et al. 1975; Kanada and Uyeta 1978; Rannug and Beije 1979; Rannug and Ramel 1978), and frameshift mutations were seen in the TA-98 strain (Kanada and Uyeta 1978). Enhanced mutagenic activity was noted in these studies upon addition of a liver microsomal activation system. Negative results have also been reported for these strains (King et al. 1979), but one study suggested that differences in the chemical employed to induce enzymes in liver homogenate as well as different strains of rat used for liver activation may influence the mutagenic response (Fabricant and Chalmers 1980).

Other Toxic Manifestations

The 1,2 isomer is moderately toxic following acute exposure, with similar effects for all routes of entry. Acute effects in man are principally associated with CNS depression, GI upset, and injury in the liver, kidneys, lungs, and adrenals (Irish 1963). Hyperemia and hemorrhagic lesions are seen throughout the body in cases of acute poisoning and have been attributed to a reduction in the level of blood clotting factors and thrombocytopenia (Martin et al. 1969). Death is usually attributed to respiratory and circulatory failure (NIOSH 1976). Ingestion of 15 ml of 1,2-dichloroethane was lethal to a 14-year-old boy within 5 days of exposure. Clinical features included hypoglycemia and hypercalcemia. Major findings at autopsy were florid liver necrosis, renal tubular necrosis, and focal adrenal degeneration and necrosis (Yodaiken and Babcock 1973). However, the survival of a 25-year-old

male, who drank 50 ml of the compound with suicidal intent, was reported. He was discharged from the hospital 87 days post-exposure with small cirrhotic areas in the liver (Prezdziak and Bakula 1975). Case histories of fatal and non-fatal poisoning are reported in some detail in the NIOSH (1976) report.

Similar effects are reported for laboratory animals following acute oral exposure to 1,2-dichloroethane. Oral LD_{50} values of 700 and 860 mg/kg have been reported for rats (McCollister et al. 1956) and rabbits (RTECS 1980), respectively. In a two-year feeding study with rats fed a mash fumigated with 1,2-dichloroethane, only a slight increase in liver fat was observed in rats receiving mash with 500 ± 40 mg 1,2-dichloroethane/kg diet; no effect was noted in rats at a lower, 250 ± 30 mg/kg diet exposure level. Mash was stored for 7-10 days with a 5% loss of residue with actual consumption estimated to be 60-70% of the original residue level. No significant differences in growth, feed consumption, or reproductive activity were noted in either group (Alumot et al. 1976).

No adverse effects were observed in two men exposed by inhalation to 4800 mg/m^3 1,2-dichloroethane for two minutes (Sayers et al. 1930). Chronic exposures are generally occupational in nature and are linked to neurological disorders, kidney and liver dysfunction, irritation of mucous membranes, abdominal pain, nausea, and anorexia (Byers 1943, Delplace et al. 1962, Watrous 1947). The concentrations and exposure times associated with the onset of chronic symptoms in humans are difficult to deduce from the literature, but 8-hour exposures to 40-400 mg/m^3 for a duration of from a few weeks to a few months appear to be characteristic of most cases. Reports of occupational exposures that were without effect have not been found in the literature (NIOSH 1976).

Cardiac and nervous system effects were reported in 100 factory workers exposed to a maximum concentration of 1,2-dichloroethane of 100 mg/m^3 for durations of 6 months to 5 years. No changes in blood or internal organ functions were noted (Rosenbaum 1947). Kozik (1957) reported effects on liver and bile ducts in Russian aircraft workers chronically exposed to the compound such that peak exposures exceeded 160 mg/m^3 with a time weighted average of about 90 mg/m^3 per work shift.

The use of 1,2-dichloroethane as a fumigant has resulted in many episodes of human poisoning (NIOSH 1976). Reported cases, however, frequently involve combined exposure with other chemicals and thus make evaluation of effects due to the 1,2 isomer alone difficult to assess. Khubutiya (1964) noted the presence of hyperchromic erythrocytes without megaloblasts and moderate to high figures for sedimentation rate, apparently induced by the increase in blood globulin, in workers exposed to 1,2-dichloroethane (concentrations not given). Leukopenia was also observed. Cases of moderate and marked monocytosis were frequent and platelets were reduced. Turk cells (mononuclear cells with morphologic characteristics of both an atypical lymphocyte and a plasma cell) were

present in the peripheral blood of 19% of the workers; total study population size was not stated.

Another study examined 118 Polish agricultural workers using 1,2-dichloroethane as a fumigant. Skin absorption resulting from spillage on clothing, shoes, skin, etc. appeared to be as significant a contributor to exposure as inhalation. Environmental air sampling in the field suggested exposure levels of 16 mg/m^3, but more controlled air sampling in a simulated laboratory setting indicated concentrations in air of about 60 mg/m^3, reaching 240 mg/m^3 during pouring operations. About 90% of the workers reported symptoms, including conjunctival congestion (69% of all workers), weakness (46%), reddening of the pharynx (42%), bronchial symptoms (35%), metallic taste in the mouth (34%), headache (33%), dermatographism (31%), nausea (26%), cough (25%), liver pain (25%), burning sensation of the conjuctiva (20%), tachycardia (18%), and dyspnea after effort (18%). The compound was also stated to be excreted in urine, but the amounts excreted reportedly did not correlate with the appearance of clinical symptoms (Brzozowski et al. 1954).

In laboratory animals, an LC_{50} value of 4000 mg/m^3/4-hour was documented for rats (Carpenter et al. 1949). LCLo values of 5000, 6000, and 12,000 mg/m^3 1,2-dichloroethane have been reported for a 2-hour exposure to mice and 7-hour exposure to guinea pigs and rabbits, respectively (RTECS 1980).

Chronic inhalation exposures to 400-1600 mg/m^3 1,2-dichloroethane for 5-32 weeks were toxic to the liver at 800 mg/m^3 and above for several species (Spencer et al. 1951, Hofmann et al. 1971). Increased liver weights were reported for guinea pigs exposed to 400 mg/m^3 for 32 weeks (Spencer et al. 1951).

Speafico and coworkers (1980) reported that exposure of Sprague-Dawley rats in inhalatory concentrations of 1,2-dichloroethane up to 600 mg/m^3 for up to 18 months, 7 hours/day, 5 days/week did not appear to be associated with marked toxicity, as indicated by a series of standard clinical chemistry parameters. A second group of rats exposed to 200 or 600 mg/m^3 for 12 months beginning at 14 months of age, however, showed functional signs suggesting effects on the liver and kidney.

Brief dermal contact with 1,2-dichloroethane seldom produces serious systemic poisoning, but repeated or prolonged contact can result in defatting of skin and dry, chapped skin (ORNL 1979).

5.1.1.3 Overview

Exposure to 1,2-dichloroethane adversely affects the circulatory, respiratory, and nervous systems as well as the liver and kidney. Most mammalian species, and presumably man, metabolize the compound to 2-chloroethanol and chloroacetic acid, with excretion primarily via the urine and expired air. A summary of irreversible adverse effects associated with 1,2-dichloroethane is presented in Table 5-3.

TABLE 5-3. ADVERSE EFFECTS OF 1,2-DICHLOROETHANE

Adverse Effect	Species	Lowest Reported Effect Level	No Apparent Effect Level
Carcinogenesis	Rat (Osborne-Mendel)	47 mg/kg/day technical grade by gavage, 5 days/week for 78 weeks	--
	Mouse (B6C3F1)	149 mg/kg/day technical grade by gavage, 5 days/week for 78 weeks	--
	Rat (Sprague-Dawley)	--	600 mg/m^3, 99.8% pure
	Mouse (Swiss)	--	99.8% pure, 7 hours/day, 5 days/week for 78 weeks
Heritable	*Drosophila* (sex-linked recessive)	4.9 g/l	--
Mutation	*Drosophila* (somatic mutation)	0.5% in diet	--
Teratogenesis	Rat (Sprague-Dawley)	--	400 mg/m^3, 7 hours/day, days 6-15 of gestation
Neurological disorders	Human	100 mg/m^3, 8 hours/day, 5 days/week for 6 months-5 years	difficult to deduce from literature
Lethality (ingestion)	Human	LDL_0 15 ml	--
	Rat	LD_{50} 700 mg/kg	--

Elevated incidences of squamous-cell carcinoma of the forestomach, hemangiosarcoma, and mammary adenocarcinoma have been observed in Osborne-Mendel rats given 47 or 95 mg 1,2-dichloroethane/kg/day by gavage for 78 weeks. In contrast, Sprague-Dawley rats exposed by inhalation to concentrations up to 600 mg/m^3 for 7 hr/day for 78 weeks exhibited no increased incidence of malignant tumors. Similar contradictory findings have been noted with mice. Gavage administration of 149-195 mg/kg/day 1,2-dichloroethane to B6C3F1 mice resulted in alveolar/bronchiolar adenomas, mammary adenocarcinomas, and endometrial tumors, while exposure to 600 mg/m^3 1,2-dichloroethane by inhalation was without carcinogenic effect in Swiss mice. This disparity in results remains to be resolved, but a prudent course of action would suggest considering 1,2-dichloroethane to be a carcinogen.

Reproduction studies with the compound are negative but heritable mutations in Drosophila and point mutations in Salmonella were produced.

Human ingestion of 15 ml of 1,2-dichloroethane was lethal, but survival following ingestion of 50 ml has been documented. Inhalation is the more typical route of human exposure, with exposures of 40-400 mg/m^3 for a few weeks to a few months generally associated with chronic symptomology (e.g., CNA depression, GI upset, and kidney and liver damage).

5.1.2 1,1-Dichloroethane

5.1.2.1 Introduction

There is scant information published on 1,1-dichloroethane. Formerly it was used as an anesthetic but this was discontinued because of marked excitation of the heart (Browning 1965). Based on the available data, there appear to be no marked differences in the toxicity of 1,1-dichloroethane and 1,2-dichloroethane, with the 1,1 isomer being somewhat less toxic.

5.1.2.2 Metabolism

Little is known about the metabolism of 1,1-dichloroethane except that following application to the shaved abdominal skin of rabbits prevented from inhaling the solvent, no definite metabolites could be detected in the exhaled air (Browning 1965).

Nakajima and Sato (1979) recently demonstrated enhanced activity of liver microsomal enzymes to metabolize 1,1-dichloroethane *in vitro* following a one-day food deprivation of male and female Wistar rats (i.e., metabolic rates were 2.9 and 3.3 times respective control levels). A sex difference was observed in the metabolic rate, with male rats (both fed and one-day fasted) metabolizing at a somewhat faster rate than females; the extent of this difference decreased when food deprivation was extended to 3 days. Fasting, however, did not produce a significant increase in the microsomal protein or cytochrome P-450 content, and a marked loss of liver weight occurred.

5.1.2.3 Human and Animal Studies

Carcinogenicity

Initial test results for the NCI bioassay with groups of 50 male and 50 female Osborne-Mendel rats and B6C3F1 mice administered technical grade 1,1-dichloroethane (99% pure) by gavage for 78 weeks were inconclusive. Test animals were administered 1,1-dichloroethane in corn oil by gavage, 5 days per week for 78 weeks at time-weighted average dosages of 764 and 382 mg/kg/day for male rats, 950 and 475 mg/kg/day for female rats, 2885 and 1442 mg/kg/day for male mice, and 3331 and 1665 mg/kg/day for female mice. For each species, 20 control animals of each sex were administered the corn oil vehicle according to the same schedule. Survival was poor in all rat groups and several mouse groups (e.g. 5, 4, and 8% of the male rats given 0, 382, and 764 mg/kg/day, respectively, were alive at study termination). The high early mortality appeared to be related to a high incidence of pneumonia; pneumonia was observed in 80% of the rats in this bioassay. The high early mortality complicates interpretation of this study in that the number of rats of both sexes and male mice surviving long enough to be at risk from late-developing tumors was low. Dose-related marginal increases in mammary adenocarcinomas and in hemangiosarcomas among female rats (475 and 950 mg/kg/day) and a significant increase in the incidence of endometrial stromal polyps (benign endometrial neoplasms) in high-dose female mice compared to controls (9% vs. 0% in controls) are indicative of possible carcinogenic potential of 1,1-dichloroethane, but under the conditions of this bioassay, no conclusive evidence for the carcinogenicity of 1,1-dichloroethane was established (NCI 1978b).

Fetotoxicity

Schwetz and coworkers (1974) found 1,1-dichloroethane to be fetotoxic in Sprague-Dawley rats exposed to 24,300 mg/m^3 reagent-grade 1,1-dichloroethane 7 hr/day on days 6-15 of gestation. A significant increase in the incidence of retarded fetal development, characterized as delayed ossification of sternebrae, was seen at 24,300 mg/m^3 (42% vs. 11% in controls), but not in rats similarly exposed to 15,390 mg/m^3. There were no effects on the incidence of fetal resorptions, fetal body measurements, or the incidence of gross or soft tissue anomalies. No signs of toxicity were observed in the dams at either concentration.

Mutagenicity

No mutagenicity data on 1,1-dichloroethane have been found.

Other Toxic Manifestations

Adverse effects in laboratory animals associated with exposure to 1,1-dichloroethane include central nervous systems depression expressed as abnormal weakness, intoxication, restlessness, irregular respiration, muscle incoordination, and unconsciousness. Damage to the liver and/or

kidney has been demonstrated in various animal species following exposure to 1,1-dichloroethane (Parker et al. 1979). An LD_{50} value of 725 mg/kg was recorded for the rat by the oral route (RTECS 1980) and minimal lethal concentrations of 64,800 mg/m^3 and 70,000 mg/m^3 have been reported for rats and mice, respectively (Smyth 1956, Lazarew 1929).

In man, toxic chemical hepatitis and/or kidney injury, pulmonary irritation, and damage to the hematopoetic system are associated with inhalation of 1,1-dichloroethane. Repeated or prolonged skin exposure can defat the skin and cause dermatitis (Parker et al. 1979).

5.1.2.4 Overview

Although data are sparse, available effect levels for mammalian species are summarized in Table 5-4. Initial carcinogenicity studies in rodents exposed to 1,1-dichloroethane by gavage for 78 weeks were inconclusive due to poor survival. However, the compound's structural similarity to 1,2-dichloroethane and the dose-related marginal increases in some tumor types observed in the NCI bioassay are indicative of possible carcinogenic potential. The 1,1 isomer is currently being reevaluated by the National Cancer Institute. Until the results from this second bioassay are available, 1,1-dichloroethane should be considered a suspect carcinogen. In view of the relative paucity of data in other areas, such as the teratogenicity, mutagenicity, and long-term oral toxicity of 1,1-dichloroethane, estimates of the effects of chronic oral exposure at low levels cannot be made with any confidence.

5.2 HUMAN EXPOSURE

5.2.1 Introduction

This section considers the exposure of humans to 1,2-dichloroethane and 1,1-dichloroethane. Since the 1,2 isomer is the largest volume synthetic organic chemical manufactured in the United States, a large potential for exposure exists. The 1,1 isomer, on the other hand, is produced in very limited quantities, thus suggesting limited exposures. However, monitoring data for both of these chemicals is extremely limited, making exposure estimation difficult. The following sections will consider exposure through ingestion, inhalation, and dermal absorption for various subpopulations.

5.2.2 Ingestion

5.2.2.1 Drinking Water

The 1,2 isomer has been found in drinking water. The National Organics Reconnaissance Survey found it in 14% of the raw water supplies sampled and 32.5% of finished water samples; the highest concentration observed was 6 μg/l (U.S. EPA 1975). More recently, data from national surveys of drinking water have been summarized (Coniglio et al. 1980). These data are shown in Table 5-5 and suggest that dichloroethanes

TABLE 5-4. ADVERSE EFFECTS OF 1,1-DICHLOROETHANE ON MAMMALS

Adverse Effect	Species	Lowest Reported Effect Level	No Apparent Effect Level
Carcinogenesis	Rat Mouse	No conclusive evidence is currently available, but some dose-related marginal increases in some tumor types noted for both rats and mice in a gavage study complicated by poor survival.	—
Fetotoxicity (delayed ossification)	Rat	24300 mg/m^3, 7 hours/day, days 6-15 of gestation	15,390 mg/m^3, 7 hours/day, days 6-15 of gestation
Mutagenesis	—	No data available	—
Chronic Oral Toxicity	—	No data available	—
Lethality (ingestion)	Rat	LD_{50} 700 mg/kg	—

TABLE 5-5. DICHLOROETHANES IN DRINKING WATER -- FEDERAL DATA

Water Source	No. Cities Sampled		% Positive Samples		Mean* (μg/l)		Median** (μg/l)		Range* (μg/l)	
	Raw	Finished	Raw	Finished	Raw	Finished	Raw	Finished	Raw	Finished
					1,1-Dichloroethane					
Surface	105	103	1.9	2.9	0.1	0.2	0.1	0.2	0.1-0.1	0.2-0.2
Ground	13	13	23.1	23.1	0.7	0.3	0.8	0.2	0.4-0.9	0.2-0.5
					1,2-Dichloroethane					
Surface	105	133	9.5	4.5	1.46	2.14	0.55	1.8	0.1-45	0.8-4.8
Ground	13	25	7.1	4.0	0.2	0.2	--	--	0.2	0.2

*Of positive results
**Of all results.

Source: Coniglio *et al*. (1980).

are detected infrequently in surface water and at low levels, generally less than 1 μg/l. However, a few samples showed higher levels of the 1,2 isomer in finished surface water, up to 4.8 μg/l.

Data from Federally sponsored surveys of groundwater are sparse. Coniglio and coworkers (1980) also summarized data collected by the states regarding contamination of groundwater supplies. These results are shown in Table 5-6. These data suggest that dichloroethanes are commonly found in groundwater supplies; however, the results are not representative, since state sampling is commonly done where contamination is suspected. The presence of 1,1-dichloroethane in 18% of the wells tested is somewhat surprising since its production is so limited. The high maximum concentration of 11,300 μg/l suggests a local contamination incident. Tables 5-7 and 5-8 summarize the data available by state, suggesting a widespread problem, although it may be very localized within each state. Unfortunately, no data are available for groundwater supplies in the Gulf states, where most of the production facilities are found (see Chapter 3.0).

The number of persons exposed to dichloroethane may be estimated by assuming that the percent of water supplies where dichloroethanes were detected equals the percent of the population exposed. This can only represent a rough approximation since there is wide variation in the size of water supplies, and it is not likely that the monitoring data for dichloroethanes is a representative sample by size of the water supply. However, for comparison purposes, it was estimated that about 5 million persons are exposed to detectable levels of the 1,2 isomer as a result of surface water contamination, with an average concentration of about 2 μg/l, or an exposure of about 4 μg/day (assuming a consumption of 2 l/day). About 3 million persons may be exposed to detectable levels of 1,1-dichloroethane in drinking water from surface water supplies. Mean levels are 0.2 μg/l, resulting in a mean exposure for these persons of 0.4 μg/day. These estimates assumed that 117 million persons utilize surface water supplies (Temple, Barker and Sloane, Inc. 1977).

Similar estimates could be made for groundwater, assuming that 75 million persons utilize groundwater supplies (Temple, Barker and Sloane, Inc. 1977). Thus, 5 million persons could be exposed to detectable levels of the 1,2 isomer, and 13.5 million persons to detectable levels of the 1,1 isomer. However, there are numerous problems with making these estimations. The number of groundwater samples taken in Federal surveys is too small to be considered representative. The sample size from state surveys is larger, but is biased toward the detection of contaminated supplies, as is shown in some cases in Table 5-7 and 5-8. Thus, the population estimates are probably overestimated. It is also difficult to determine the levels of exposure. According to Table 5-5, mean levels in groundwater are 0.2 and 0.3 μg/l for the 1,2 isomer and 1,1 isomer, respectively, based upon limited sampling. These levels represent typical exposures of 0.4 and 0.6 μg/day. However, maximum values of 400 and 11,330 μg/l suggest maximum exposures of

TABLE 5-6. OCCURRENCE OF DICHLOROETHANES IN GROUNDWATER -- STATE DATA

Compound	No. States Tested	No. Wells Tested	% Positive Samples	Maximum (μg/l)
1,1-dichloroethane	9	785	18	11,330
1,2-dichloroethane	12	1212	7	400

Source: Coniglio *et al*. (1980).

TABLE 5-7. GROUNDWATER DATA REPORTEDLY AVAILABLE FROM STATE AGENCIES FOR 1,2-DICHLOROETHANE[a]

	No. Wells Tested	% Positive[b]
Alabama	80	3
Delaware	15	73
Florida	329	15
Kentucky	22	0
Maine	89	0
Massachusetts	163	3
New Jersey	411	2
North Carolina	44	7
South Carolina	4	25
South Dakota	1	0
Tennessee	50	8
Washington	4	0

[a]26 states have not tested for this compound.

[b]These data represent a compilation and no information is available on methods or detection limits.

Source: Coniglio *et al*. (1980).

TABLE 5-8. GROUNDWATER DATA REPORTEDLY AVAILABLE FROM STATE AGENCIES FOR 1,1-DICHLOROETHANE[a]

	No. Wells Tested	% Positive[b]
Alabama	80	8
Florida	329	36
Kentucky	22	0
Maine	89	0
Massachusetts	163	1
North Carolina	44	14
South Carolina	4	0
Tennessee	50	26
Washington	4	0

[a]29 states have not tested for this compound.

[b]These data represent a compilation and no information is available on methods or detection limits.

Source: Coniglio *et al*. (1980).

800 and 23,000 μg/day may occur in some locations. It is unknown how prevalent such exposures are.

5.2.2.2 Food

Numerous uses of 1,2-dichloroethane may result in contamination of food, such as its use as a pesticide, grain fumigant, solvent to clean grain mill machinery, solvent to extract oleoresins, and adhesive coating for food packaging (Gold 1980). However, data on residues of the compound in food are sparse.

Numerous formulations of the 1,2 isomer are registered for use as fumigants as is shown in Table C-10 (see Appendix C); however, there is some controversy as to whether residues are found in the crop after storage. They have been exempted from a tolerance requirement when used as a post-harvest fumigant on barley, corn, oats, popcorn, rice, rye, wheat, and sorghum due to a lack of detection of the compound in baked products (Gold 1980, Jacobson 1979). Although levels of 20-50 mg/kg have been found in fumigated soybeans and wheat (Wit 1969, Storey et al. 1972), residues in baked products have not been reported.

Berck (1974), on the other hand, was not able to remove or analyze 1,2-dichloroethane in wheat treated with Dowfume EB-5 (contains the 1,2 isomer, ethylene dibromide, and carbon tetrachloride). However, no 1,2-dichloroethane was detected in cereal. It appears likely that any 1,2-dichloroethane remaining in the milled product would be lost through volatilization or degradation in baking. Support for this hypothesis exists in the fact that ethylene dibromide was found in wheat but not in baked bread.

Although, the 1,2 isomer is exempted from a tolerance, the World Health Organization (WHO) established suggested guidelines for residue limits of 50 mg/kg in raw cereal, 10 mg/kg in milled cereal products, and 0.1 mg/kg in bread and other cooked cereal products (Anonymous 1975).

Jacobson (1979) reports that, in addition to its use as a fumigant, the 1,2 isomer may be used by homeowners in northern California for fruits and vegetables. This author points out that crops like strawberries and cabbage can be eaten raw within 1 day of harvest. The extent of use of the compound is unknown, as is the resultant residue.

The 1,2 isomer is also used as a solvent to extract oleoresins from spices. Page and Kennedy (1975) examined oleoresins for the compound and found some evidence of contamination (see Table 5-9); however, consumption of these products would be extremely low. For example, assuming a pepper consumption of 0.4 g/day (USDA 1978), an individual could consume about 5 μg/day of 1,2-dichloroethane from pepper alone. A person consuming large amounts of these spices could be ingesting larger amounts of the compound.

TABLE 5-9. 1,2-DICHLOROETHANE RESIDUES FOUND IN SPICE OLEORESINS FROM THREE MANUFACTURERS

Spice Oleoresin	Concentration (μg/g) Manufacturer		
	A	B	C
Black Pepper		9	12
Celery		2	3
Cinnamon		3	
Clove		23	
Mace		4	
Marjoram		6	
Paprika	3	9	
Rosemary		3	
Sage		6	
Thyme		13	
Turmeric		6	2

Source: Page and Kennedy (1975).

In addition to these direct routes of contamination, Urosova (1953) found the 1,2 isomer in mother's milk. The women had been occupationally exposed to levels of 63 mg/m^3. Their milk was found to contain 0.54-0.64 mg/100 ml immediately after exposure. Exposure was thought to be dermal, since gas masks were used. Eighteen hours after exposure, the milk contained 0.2-0.6 mg/100 ml. However, maximum concentrations allowed are currently 8 mg/m^3 in the United States over a 15-minute sampling period (NIOSH 1978). Thus, assuming a linear relationship, milk of a woman exposed to the maximum of 8 mg/m^3 could contain 0.07 mg 1,2-dichloroethane/100 ml. Assuming a consumption of 1.5 l/day, an infant could consume about 1 mg/day in milk from a woman exposed at these levels.

Although low concentrations of 1,2-dichloroethane have been observed in water, it has not been detected in marine aquatic organisms. The U.S. EPA (1980), however, calculated a weighted average bioconcentration factor of 1.2 for the compound. Assuming an average water concentration of 1 μg/l, considering the data reported in Chapter 4.0, a concentration in fish of about 1.2 μg/kg might be expected. Assuming an average consumption of 11 g/day (USDA 1980), an intake of 0.13 μg/day in fish can be estimated.

Thus, intake of 1,2-dichloroethane in food is not well documented. It appears to come, however, from various sources as a result of its uses. No information is available on levels of 1,1-dichloroethane in food. It is expected, however, that human exposure to this compound would be considerably less than to the 1,2 isomer.

5.2.3 Inhalation

5.2.3.1 Occupational

NIOSH (1978) estimates that about 2 million workers are exposed to 1,2-dichloroethane in about 150,000 work places. Occupational exposure to 1,1-dichloroethane is much less extensive. Parker and coworkers (1979), in a NIOSH bulletin, estimated that about 5000 workers are exposed to 1,1-dichloroethane. While the level of occupational exposure will not be a consideration of this report, it is important to note that a large number of workers are exposed in numerous occupational settings.

NIOSH (1978) has recently lowered the standard for the 1,2 isomer to 4 mg/m^3 as a time-weighted average for up to a 10-hour workshift and a 40-hour week. Assuming a respiratory flow of 1.2 m^3/hr during the working day (ICRP 1975), an exposure of 48 mg would result from a 10-hour exposure. NIOSH also recommends a ceiling concentration of 8 mg/m^3 over a 15-minute sampling period. There are presently no standards for 1,1-dichloroethane.

5.2.3.2 Ambient Air

Limited data are available on concentrations of dichloroethanes in air (see Chapter 4.0). Neither isomer has apparently been detected in rural

areas, at a detection limit of 0.02 $\mu g/m^3$. Thus, a maximum exposure in these locations would be 0.4 µg/day. The population size for rural areas is estimated to be 55 million (U.S. Department of Commerce 1980). Recent data show average levels of 1.6-6.0 $\mu g/m^3$ 1,2-dichloroethane in industrial areas of New Jersey where it was detected. Of the 308 samples taken, quantifiable levels of the 1,2 isomer (at 0.04 $\mu g/m^3$) were found in 40% of the samples. The maximum value reported was 64 $\mu g/m^3$ in Newark (Bozzelli and Kebbekus 1979). These levels would result in exposures of 32-130 µg/day and 1300 µg/day for average and maximum conditions.

Suta (1979) has estimated that concentrations of 0.04-0.12 $\mu g/m^3$ of 1,2-dichloroethane might be found in urban areas and in the vicinity of gas stations. This is not inconsistent with the data described above, although higher levels of up to 1.4 $\mu g/m^3$ have been reported in urban areas (see Chapter 4.0). Suta also estimates that 14 million persons are exposed to these concentrations. This population could inhale 0.8-28 µg/day of the 1,2 isomer, assuming a respiratory flow of 20 m^3/day for adults. Presumably the other 152 million persons residing in urban areas (U.S. Department of Commerce 1980) receive exposures of less than 0.8 µg/day. In one study, average levels of 0.24-0.26 $\mu g/m^3$ were reported for 1,1-dichloroethane in urban areas, resulting in exposures of about 5 µg/day.

5.2.3.3 Indoor Air

Limited information suggests that levels in air indoors may be similar to levels in air outdoors. Pellizzari and coworkers (1979) sampled basements of houses in the old Love Canal area in New York. No 1,1-dichloroethane was reported. The 1,2 isomer was detected in 2/10 samples at 0.10 and 0.13 $\mu g/m^3$. Traces were measured in ambient air. Harris (1972) found levels of 11 µg of 1,2-dichloroethane/m^3 in the controlled airspace of a grounded spacecraft.

5.2.3.4 Near Sources

As discussed in Chapter 4.0, high levels of 1,2-dichloroethane have been observed in the vicinity of production facilities. Suta (1979) utilized dispersion modeling and information on the living patterns of populations near production facilities to estimate that 12.5 million people are exposed to average annual concentrations of 1,2-dichloroethane of 0.04-40 $\mu g/m^3$. Table 5-10 illustrates the distribution of exposures. Suta also estimated that another 2.3 million persons are exposed to 0.04-4 $\mu g/m^3$ as a result of emissions of the 1,2 isomer from plants that use it as a feedstock. However, this would appear to be double counting for the most part, since most of these plants also produce the compound. The concentrations shown in Table 5-10 would be slightly higher due to the use of the compound as a feedstock. For the most part, however, the emissions are due to the production (see Chapter 3.0).

Inhalation exposures may also occur in the vicinity of gasoline stations. However, exposures of this nature would be of very short duration. For example, Suta (1979) estimated that about 30 million Americans are exposed to 1,2-dichloroethane while filling their tanks

TABLE 5-10. ESTIMATED HUMAN POPULATION EXPOSURES TO ATMOSPHERIC 1,2-DICHLOROETHANE EMITTED BY PRODUCERS

Annual Average Atmospheric Concentration ($\mu g/m^3$)	Average Exposure[a] (μg/day)	Number of People Exposed
40	800	1700
24-40	480-800	3300
12-24	240-480	28,000
4-12	80-240	280,000
2.4-4.0	48-80	400,000
1.2-2.4	24-48	1,500,000
0.40-1.2	8-24	4,300,000
0.24-0.40	4.8-8	1,900,000[b]
0.12-0.24	2.4-4.8	3,500,000[b]
0.04-0.12	0.8-2.4	550,000[b]
	Total	12,500,000

[a]Assumes inhalation of 20 m^3/day.

[b]These are underestimates because the dispersion modeling results were not extrapolated beyond 30 km from each 1,2-dichloroethane production facility.

Source: Suta (1979).

in self-service stations. He estimates this large subpopulation is exposed to 6 $\mu g/m^3$ for 2.2 hr/yr; however, this seems too low. It has been assumed for this report that a person fills his gasoline tank an average of once a week, spending 10 minutes per visit. Thus, an exposure duration of about 9 hr/yr can be estimated, or 0.02 hr/day. Assuming a respiratory flow of 1.2 m^3/hr, this is a time-weighted exposure of 0.1 μg/day.

In the case of a gasoline spill, air concentrations could be much higher. McDermott and Killiany (1978) and Jacobs (1979) both calculated the equilibrium vapor concentration of the 1,2 isomer in unleaded gasoline to be about 800 $\mu g/m^3$. This would, however, be an acute episode of perhaps 1-8 hours, thus resulting in an exposure of 960-7680 μg 1,2-dichloroethane, assuming a respiratory flow of 1.2 m^3/hr.

Homeowners applying 1,2-dichloroethane as a pesticide would also be subject to inhalation exposure. The information regarding the nature and extent of this use does not allow the estimation of exposure.

5.2.4 Dermal Exposure

Numerous uses of 1,2-dichloroethane could result in dermal exposure, especially its use in gasoline, as a fumigant, and as a cleaning solvent. Gasoline contains about 0.95 g of the compound/gallon of gas, or about 250 mg/l. Only one solvent containing 1,2-dichloroethane (at 50 mg/l) is available for consumer use (Gold 1980). Pesticides may contain 70% or 700,000 mg/l of the compound. In order to estimate exposure to these products, it was assumed that a spill occurred on 5% of the body's surface area or about 800 cm^2. This is about equal to the surface area of both hands. The duration of exposure was assumed to be 2 minutes, and the permeability constant for 1,2-dichloroethane was assumed to be 0.01 cm/hr, which is intermediate between butanol and chloroform, and about equal to that for ethyl ether. Table 5-11 shows the dermal exposures that were calculated, ranging from 0.01-185 mg as acute exposures.

These scenarios illustrate the relative magnitude of exposure. In addition, inhalation exposures would result from such incidents.

Dermal exposure to 1,1-dichloroethane is unknown, but is expected to be small, since the compound is not used in any products available to the consumer.

5.2.5 Exposures Resulting From 1,2-Dichloroethane as a Contaminant in Other Products

Table 5-12 summarizes the concentration of 1,2-dichloroethane in other products (see Chapter 3.0). Dermal and inhalation exposures may occur as a result of the use of these products.

TABLE 5-11. DERMAL EXPOSURES TO 1,2-DICHLOROETHANE RESULTING FROM SPILLS.

Product	Concentration in Product (mg/l)	Exposure (mg)
Pesticide	700,000	185
Solvent	50	0.01
Gasoline	250	0.07

Source: See Chapter 3.0.

TABLE 5-12. CONCENTRATION OF 1,2-DICHLOROETHANE AS A CONTAMINANT IN OTHER COMPOUNDS

Final Product	Concentration (mg/kg)
VCM	10
1,1,1-trichloroethane	1-10
Ethyleneamines	1-10
Trichloroethylene	< 1
Tetrachloroethylene	< 1
Vinylidene chloride	1

Source: See Chapter 3.0.

5.2.6 Overview

The general population is largely exposed to 1,2-dichloroethane in drinking water from surface supplies (∿4 μg/day) and food (∿6 μg/day). Inhalation may be an important route of exposure in some urban areas due to the use of this compound in leaded gasoline (∿0.8-28 μg/day). Inhalation would be the predominant route of exposure for persons living in highly industrial areas due to the common use of this compound as a solvent (∿32-120 μg/day). Persons living in the vicinity of production facilities can receive 0.8-800 μg/day through inhalation, depending upon their distance from the plant.

However, local situations may occur which reverse these trends. For example, local contamination of drinking water, especially groundwater, may occur resulting in exposures of up to 800 μg/day via this route. In addition, maximum inhalation exposures of 1300 μg/day may occur in industrial areas. A potential exposure route which warrants more investigation is the suggestion that nursing infants of occupationally exposed mothers may receive up to 1000 μg/day in breast milk.

In addition to these chronic exposures, acute exposures may occur as a result of gasoline, solvent, and pesticide spills. An 8-hour exposure to a gasoline spill could result in an exposure of about 8000 μg. A two-minute dermal exposure could result in an exposure of 70 μg for gasoline, 70 μg for a commercial solvent, and 185,000 μg for a pesticide. The latter is due to the high levels of the 1,2 isomer in pesticide formulations. Table 5-13 summarizes the estimates of human exposure to 1,2-dichloroethane.

Exposure to 1,1-dichloroethane is largely unknown. It appears that an important route of exposure is drinking water; typical exposures of 0.4-0.6 μg/day are found. While contamination of surface waters does not appear to be very common, contamination of groundwater appears relatively frequently. Even in the Federally collected data, this compound was found in 23% of the groundwater supplies, and this sampling is probably not severely biased toward contaminated sites. In the state-collected data, 18% of the groundwater supplies tested contained 1,1-dichloroethane, although this sampling is more likely to be biased. Thus, it appears that exposure to 1,1-dichloroethane in drinking water is relatively common. In addition, maximum levels have resulted in exposures of up to 23,000 μg/day. Exposure via inhalation, at levels of about 5 μg/day, have been reported in urban areas.

TABLE 5-13. HUMAN EXPOSURE TO 1,2-DICHLOROETHANE

General Population

Route	Subpopulation Size	Assumptions	Exposure (μg/day)
Ingestion			
Drinking water			
Surface	5 million	2 μg/l, 2 l/day	4
	112 million	<1 μg/l, 2 l/day	< 2
Ground	5 million	0.3 μg/l, 2 l/day	0.6
	70 million	<0.2 μg/l, 2 l/day	< 0.4
Food			
Pepper	large	0.4 g pepper/day, 12 μg/g	5
Fish	may be large	1 μg/l in water, BCF of 1.2 11 g fish/day	0.13
Inhalation			
Rural areas	large	<0.02 μg/m^3, 20 m^3 air/day	<0.4
Urban areas	14 million	0.04-1.4 μg/m^3, 20 m^3	0.8-28
	152 million	<0.04 μg/m^3, 20 m^3	<0.8
Industrial areas	may be large	1.6-6.0 μg/m^3, 20 m^3 air/day	32-120
Near production facilities	300,000	4-40 μg/m^3, 20 m/^{3} day	80-800
	6.2 million	0.4-4 μg/m^3, 20 m^3/ day	8-80
	6 million*	0.04-0.4 μg/m^3, 20 m^3/day	0.8-8
Persons using self-service gas stations	30 million	6 μg/m^3, 0.02 hr/day	0.1

TABLE 5-13. HUMAN EXPOSURE TO 1,2-DICHLOROETHANE (Continued)

Isolated Subpopulations

Route	Assumptions	Exposure
Ingestion		
Drinking water		
Surface	maximum level of 4.8 μg/l, 2 l/day	9.6 μg/day
Ground	maximum level of 400 μg/l, 2 l/day	800 μg/day
Food		
Breast-fed infants	mother's occupational exposure at 4 mg/m^3, 0.07 mg/100 ml milk, 1.5 l milk/day	1000 μg/day
Inhalation		
Occupational	4 mg/m^3, 10-hour exposure, 1.2 m^3 air/hour	48,000 μg/day
Industrial	maximum level of 64 μg/m^3/day, 20 m^3/day	1300 μg/day
Acute Exposures		
Inhalation		
gasoline spill	800 μg/m^3, 1-8 hour exposure, 1.2 m^3/hour	960-7680 μg
Dermal		
gasoline spill	spill to 800 cm^2, permeability constant of 0.01 cm/hour, duration of 2 minutes, concentration of 250 mg/l in gasoline	70 μg
solvent spill	spill to 800 cm^2, permeability constant of 0.01 cm/hour, duration of 2 minutes, concentration of 50 mg/l in solvent	10 μg
pesticide spill	spill to 800 cm^2, permeability constant of 0.01 cm/hour, duration of 2 minutes, concentration of 700,000 mg/l in product	185,000 μg

*Underestimated

Source: See text.

REFERENCES

Alumot, E.; Nachtomi, E.; Mandel, E.; Holstein, P.; Bondi, A. Tolerance and acceptable daily intake of chlorinated fumigants in the rat diet. Food Cosmet. Toxicol. 14(2):105-110; 1976.

Anders, M.W.; Livesey; J.C. Metabolism of 1,2-dihaloethanes. In Ethylene dichloride: a potential health risk? Banbury Rep. 5:331-341; 1980.

Anonymous. FAO/WHO pesticides residue tolerances for food grains. Pesticides 9(2): 33-34; 1975.

Banerjee, S.; Van Duuren, B.L. Binding of carcinogenic halogenated hydrocarbons to cell macromolecules. J. Nat. Cancer Inst. 63(3):707-711; 1979.

Berck, B. Fumigant residues of carbon-tetrachloride, ethylene dichloride, and ethylene dibromide in wheat flour, bran, middlings, and bread. J. Agric. Food. Chem. 22:977-984; 1974.

Bozzelli, J.W.; Kebbekus, B.B. Analysis of selected volatile organic substances in ambient air. Trenton, NJ: New Jersey Department of Environmental Protection; 1979. Available from: NTIS, Springfield, VA: PB 90 14469 4.

Browning, E. Toxicity and metabolism of industrial solvents. Amsterdam: Elsevier Publishing Co.; 1965. (As cited by U.S. EPA 1979)

Brzozowski, J.; Czajka, J.; Dutkiewicz, T.; Kesy, I.; Wojcik, J. [Work hygiene and the health condition of workers occupied in combating the Leptinotarsa decemlineata with HCH and dichloroethane] Med. Pracy. 5:89-98; 1954. (As cited by NIOSH 1976)

Byers, D.H. Chlorinated solvents in common wartime use. Ind. Med. 12:440-443; 1943. (As cited by IARC 1979)

Carpenter, J.; Smyth, H.F., Jr.; Pozzani, V.C. The assay of acute vapor toxicity, and the grading and interpretation of results on 96 chemical compounds. J. Ind. Hyg. Toxicol. 31:343-346; 1949. (As cited by IARC 1979)

Coniglio, W.A.; Miller, K.; MacKeever, D. The occurrence of volatile organics in drinking water. Washington, DC: Criteria and Standards Division, U.S. Environmental Protection Agency; 1980.

Delplace, Y.; Cavigneaux, A.; Cabasson, G. Occupational diseases due to methylene chloride and dichloroethane (Fr.). Arch. Mal. Prof. 23: 816-817; 1962. (As cited by IARC 1979).

Drury, J.S.; Hammons, A.S. Investigations of selected environmental pollutants: 1,2-dichloroethane. Oak Ridge, TN: Oak Ridge National Laboratory; 1979.

Fabricant, J.D.; Chalmers, J.H., Jr. Evidence of the mutagenicity of ethylene dichloride and structurally related compounds. In Ethylene dichloride: a potential health risk? Banbury Rep. 5:309-329; 1980.

Gold, L.W. Human exposures to ethylene dichloride. In Ethylene dichloride: a potential health risk? Banbury Rep. 5: 209-225; 1980.

Harris, E.S. Trace contaminant analysis of enclosed environment. Tahori, A.S. ed. Fate of pesticides in environment. Proceedings of the second international IUPAC congress of pesticide chemistry. Vol. VI. New York, NY: Gordon and Breach Science Publishers; 1972: 443-463. (As cited in Drury and Hammons 1979)

Hofmann, H.T.; Birnstiel, H.; Jobst, P. [On the inhalation toxicity of 1,1- and 1,2-dichloroethane.] (Ger) Arch. Toxikol. 27:248-265; 1971. (As cited by NIOSH 1976)

Hooper, K.; Gold, L.S.; Ames, B.N. The carcinogenic potency of ethylene dichloride in two animal bioassays: a comparison of inhalation and gavage studies. In Ethylene dichloride: a potential health risk? Banbury Rep. 5:65-81; 1980.

IARC Monographs on the evaluation of carcinogenic risk of chemicals to humans: 1,2-dichloroethane. 429-448; 1979.

International Commission on Radiological Protection (ICRP). Report of the task group on reference man. New York, NY: Pergamon Press; 1975.

Irish, D.D. Halogenated hydrocarbons: I. Aliphatic. Patty, F.A. ed. Industrial hygiene and toxicology, Volume II. Toxicology. New York, NY: Interscience Publishers, 1279-1284; 1963.

Jacobs, E.S. Use and air quality impact of ethylene dichloride and ethylene dibromide scavengers in leaded gasoline. Conference on ethylene dichloride: economic importance and potential health risks. Cold Spring Harbor, NY: Banbury Center; 1979 November 14-17: 1-15.

Jacobson, F.B. Pesticide residues. The Manufacturing Confectioner 59(4):77-80; 1979.

Jenssen, D.; Rannug, U.; Ramel, C.; Hedenstedt, A.; Hefner, E. Chemical mutagenicity in Salmonella and Chinese hamster V79 cells after metabolic activation in an isolated liver perfusion system. Mutat. Res. 64:120; 1979.

Kanada, T.; Uyeta, M. Mutagenicity screening of organic solvents in microbial systems. Mutat. Res. 54:215; 1978.

Khubutiya, V.A. Hematological changes in those working with dichloroethane. Hyg. Sanit. (Synopsis of Reports) 29:125-126; 1964. (As cited by NIOSH 1976)

King, M.T.; Beikirch, H.; Eckhardt, K.; Gocke, E.; Wild, D. Mutagenicity studies with x-ray-contrast media, analgesics, antipyretics, antirheumatics and some other pharmaceutical drugs in bacterial, Drosophila and mammalian test systems. Mutat. Res. 66:33-43; 1979.

Kozik, I. [Problems of occupational hygiene in the use of dichloroethane in the aviation industry.] Gig. Tr. Prof. Zabol. 1:31-38; 1957. (As cited by NIOSH 1976)

Lazarew, N.W. Concerning the strength of the narcotic effect of the vapors of the chlorine derivatives of methanes, ethanes, and ethylenes. Arch. Exp. Pathol. Pharmakol. 141:19; 1929. (As cited by U.S. EPA 1979)

Livesey, J.C.; Anders, M.W. In vitro metabolism of 1,2-dihaloethanes to ethylene. Drug Metab. Dispos. 7(4):199-203; 1979.

Maltoni, C.; Valgimigli, L.; Scarnato, C. Long-term carcinogenic bioassays on ethylene dichloride administered by inhalation to rats and mice. In Ethylene dichloride: a potential health risk? Banbury Rep. 5: 3-33; 1980.

Martin, G., et al. Clinical features, pathogenesis and management of dichloroethane poisoning. Ger. Med. Mon. 14:62; 1969. (As cited in U.S. EPA 1980)

McCann, J.; Simmon, V.; Streitwieser, D.; Ames, B.N. Mutagenicity of chloroacetaldehyde, a possible metabolic product of 1,2-dichloroethane (ethylene dichloride), chloroethanol (ethylene chlorohydrin), vinyl chloride, and cyclophosphamide. Proc. Nat. Acad. Sci. 72(8):3190-3192; 1975.

McCollister, D.D.; Hollingsworth, R.L.; Oyen, F.; Rowe, V.K. Comparative inhalation toxicity of fumigant mixtures. Individual and joint effects of ethylene dichloride, carbon tetrachloride and ethylene dibromide. Arch. Ind. Health 13:1-7; 1956. (As cited by IARC 1976)

McDermott, H.J.; Killany, S.E. Quest for a gasoline TLV. Am. Ind. Hyg. Assoc. J. 39(2):110-116; 1978.

Nakajima, T.; Sato, A. Enhanced activity of liver drug-metabolizing enzymes for aromatic and chlorinated hydrocarbons following food deprivation. Toxicol. Appl. Pharmacol. 50(3):549-556; 1979.

National Cancer Institute (NCI). Bioassay of 1,2-dichloroethane for possible carcinogenicity. Report No. DHEW/PUB/NIH-78-1316, NCI-CG-TR-55; 1978a. 112 p. Available from: NTIS, Springfield, VA; PB 285968.

National Cancer Institute (NCI). Bioassay of 1,1-dichloroethane for possible carcinogenicity. Report No. DHEW/PUB/NIH-78-1316, NCI-CG-TR-66; 1978b. 93 p. Available from: NTIS, Springfield, VA; PB 283 345.

National Institute of Occupational Safety and Health (NIOSH). Criteria document: recommendations for an occupational exposure standard for ethylene dichloride (1,2-dichloroethane). HEW Publ. (NIOSH) 76(139): 158; 1976.

National Institute for Occupational Safety and Health (NIOSH). Occupational exposure to ethylene dichloride (1,2-dichloroethane), revised recommended standard. Washington, DC: U.S. Department of Health, Education, and Welfare, 78-211; 1978.

Nylander, P.O.; Olofsson, H.; Rasmuson, B.; Svahlin, H. Mutagenic effects of petrol in Drosophila melanogaster I. Effects of benzene and 1,2-dichloroethane. Mutat. Res. 57(2):163-167; 1978.

Oak Ridge National Laboratory (ORNL). Investigations of selected environmental pollutants 1,2-dichloroethane. Oak Ridge, TN: Oak Ridge National Laboratory, 79-105; 1979.

Page, B.D.; Kennedy, B.P.C. Determination of methylene chloride ethylene dichloride, and trichloroethylene as solvent residues in spice oleoresins, using vacuum distillation and electron-capture gas chromatography. J. Assoc. Off. Anal. Chem. 58:1062; 1975. (As cited by U.S.EPA 1980)

Parker, J.C.; Casey, G.E.; Bahlman, L.J.; Leidel, N.A.; Rose, D.; Stein, H.P.; Thomas, A.W.; Lane, J.M. NIOSH current intelligence bulletin No. 27. Chloroethanes; review of toxicity. Am. Ind. Hyg. Assoc. J. 40(3):A46-A60; 1979.

Pellizzari, E.D.; Erickson, M.C.; Zweidinger, R.A. Formulation of a preliminary assessment of halogenated organic compounds in man and environmental media. Washington, DC: U.S. Environmental Protection Agency; 1979. Available from: NTIS, Springfield, VA; PB 112 170.

Prezdziak, J.; Bakula, S. Acute poisoning with 1,2-dichloroethane. Wiad. Lek. 28(11):983-987; 1975. Abst.

Rannug, U.; Beije, B. The mutagenic effect of 1,2-dichloroethane on Salmonella typhimurium: II. Activation by the isolated perfused rat liver. Chem-Biol. Interact 24(3):265-286; 1979.

Rannug, U.; Ramel, C. The mutagenicity and metabolism of 1,2-dichloroethane. Mutat. Res. 53(2):251-252; 1978.

Rao, K.S.; Murray, J.S.; Deacon, M.M.; John, J.A.; Calhoun, L.L.; Young, J.T. Teratogenicity and reproduction studies in animals inhaling ethylene dichloride. In Ethylene dichloride: a potential health risk? Banbury Rep. 5:149-166; 1980.

Rapoport, I.A. The reaction of genic proteins with 1,2-dichloroethane (Russ.). Dokl. Akad. Nauk SSR 134:1214-1217; 1960. [Translation in Dokl. Biol. Sci. 134:745-746; 1960]. (As cited by IARC 1979)

Registry of Toxic Effects of Chemical Substances (RTECS). On line computer search: 1,1-dichloroethane; 1,2-dichloroethane; July 1980.

Reitz, R.H.; Fox, T.R.; Domoradzki, J.Y.; Quast, J.F.; Langvardt, P.; Watanabe, P.G. Pharmacokinetics and macromolecular interactions of ethylene dichloride: comparison of oral and inhalation exposures. In Ethylene dichloride: a potential health risk? Banbury Rep. 5:135-148; 1980.

Rosenbaum, N.D. [Ethylene dichloride as an industrial poison.] Gig. Sanit. 12(2):17-21; 1947. (As cited by NIOSH 1976)

Sayers, R.R., Yant, W.P.; Waite, C.P.; Patty, F.A. Acute response of guinea pigs to vapors of some new commercial organic compounds -- I. Ethylene dichloride. Public Health Rep. 45:225-239; 1930. (As cited by NIOSH 1976)

Schwetz, B.A.; Leong, B.K.J.; Gehring, P.J. Embryo- and fetotoxicity of inhaled carbon tetrachloride, 1,1-dichloroethane and methyl ethyl ketone in rats. Toxicol. Appl. Pharmacol. 28(3):452-464; 1974.

Shakarnis, V.F. 1,2-dichloroethane induced chromosome non-disjunction and recessive sex-linked lethal mutation in Drosophila melanogaster. Genetika 5:89-95; 1969. (As cited by IARC 1979)

Smyth, H.F., Jr.; Cummings, D.E. Memorial Lecture. Am. Ind. Hyg. Assoc. Quart. 17:129; 1956. (As cited by Irish 1963)

Spencer, H.C.; Rowe, V.K.; Adams, E.M.; McCollister, D.D.; Irish, D.D. Vapor toxicity of ethylene dichloride determined by experiments on laboratory animals. Arch. Ind. Hyg. Occup. Med. 4:482-493; 1951. (As cited by NIOSH 1976)

Spreafico, F.; Zuccato, E.; Marcucci, F.; Sironi, M.; Paglialunga, S.; Madonna, M.; Mussini, M. Pharmacokinetics of ethylene dichloride in rats treated by different routes and its long-term inhalatory toxicity. In Ethylene dichloride: a potential health risk? Banbury Rep. 5:107-135; 1980.

Storey, C.L.; Kirk, L.D.; Mustakas, G.C. Fate of EDC-CCl_4 (ethylene chloride-carbon tetrachloride (75:25) during milling and oil extraction of soybeans. J. Econ. Entomol. 65:1126; 1972. (As cited by Berck 1974)

Suta, B.E. Assessment of human exposures to atmospheric ethylene dichloride. Research Triangle Park, NC: Office of Air Quality Planning and Standards, U.S. Environmental Protection Agency; 1979.

Temple, Barker and Sloane, Inc. Survey of operating and financial characteristics of community water systems. Washington, DC: Office of Water Supply, U.S. Environmental Protection Agency; 1977.

Theiss, J.D.; Stoner, G.D.; Shimkin, M.B.; Weisburger, E.K. Test for carcinogenicity of organic contaminants of United States drinking waters by pulmonary tumor response in strain A mice. Cancer Res. 37(8)Pt. 1: 2717-2720; 1977.

Urusova, T.P. About a possibility of dichloroethane absorption into milk of nursing women when contacted under industrial conditions. Gig. Sanit. 18(3):36-37; 1953. (As cited by NIOSH 1976)

U.S. Department of Agriculture (USDA). Food and nutrient intakes of individuals in 1 day in the United States, Spring 1977. Nationwide Food Consumption Survey 1977-78. Preliminary Report No. 2. Washington, DC: U.S. Department of Agriculture, Science and Education Administration; 1980.

U.S. Department of Commerce. Statistical abstract of the United States. Washington, D.C., Bureau of the Census, 1980.

U.S. Environmental Protection Agency (U.S. EPA). Ambient water quality criteria. Criterion document -- trichloroethylene. Washington, DC: Criteria and Standards Division, Office of Water Planning and Standards; 1979. Available from NITS, Springfield, VA: PB 292 445.

U.S. Environmental Protection Agency (U.S. EPA). Ambient water quality criteria for chlorinated ethanes. Report No. EPA 440/5-80-029. Washington, DC: Office of Water Regulations and Standards, U.S. Environmental Protection Agency; 1980.

U.S. Environmental Protection Agency (U.S. EPA). Monitoring of ambient levels of EDC near production and user facilities. Research Triangle Park, NC: Environmental Monitoring and Support Laboratory, U.S. Environmental Protection Agency; 1975.

Van Durren, B.L.; Goldschmidt, B.M.; Loewengart, G.; Smith, A.C.; Melchionne, S.; Seldman, I.; Roth, D. Carcinogenicity of halogenated olefinic and aliphatic hydrocarbons in mice. J. Natl. Cancer Inst. 63(6):1433-1439; 1979.

Vozovaya, M.A. Development of offspring of two generations obtained from females subjected to the action of dichloroethane. Gig. Sanit. 7:25-28; 1974. Abst.

Watrous, R.M. Health hazards of the pharmaceutical industry. Br. J. Ind. Med. 4:111-125; 1947. (As cited by IARC 1979)

Wit, S.L.; Besemer, F.H.; Das, H.A.; Goedkoop, W.; Loojes, F.E.; Meppelink, E.R. Results of an investigation on the regression of three fumigants (carbon tetrachloride, ethylene dibromide and ethylene dichloride) in wheats during processing to bread. Report 36/69. National Institute of Public Health, Bilthoven, Netherlands; 1969. (As cited by Gold 1980)

Yllner, S. Metabolism of 1,2-dichloroethane-14C in the mouse. Acta Pharmacol. Toxicol. 30:257-265; 1971. (As cited by NIOSH 1976)

Yodaiken, R.E.; Babcock, J.R. 1,2-dichloroethane poisoning. Arch. Environ. Health 26(5):281-284; 1973.

6.0 EFFECTS AND EXPOSURE -- AQUATIC BIOTA

6.1 EFFECTS ON BIOTA

6.1.1 Introduction

This section provides information about the levels of 1,1- and 1,2-dichloroethane exposure at which the normal physiologic processes and behavior of aquatic organisms are disrupted, as indicated by laboratory and field studies. The data base on the toxicity of these compounds is very limited, tests having been conducted for only a few species. The 1,2 isomer is a liquid and is sufficiently water soluble to be of potential concern as a water pollutant (U.S. EPA 1980a). Most of the studies conducted on marine freshwater organisms were static toxicity tests, which would most closely approximate the occasional and short-term occurrence of higher concentrations of 1,2-dichloroethane found in aquatic systems. No toxicity data were available for 1,1-dichloroethane specifically.

6.1.2 Freshwater Organisms

Two freshwater organisms, bluegill (*Lepomis macrochirus*) and *Daphnia* were tested for their sensitivity to 1,2-dichloroethanes. In static bioassays, the 96-hr LC_{50}* values for these organisms were 550 mg/l and 218 mg/l, respectively (Dawson *et al*. 1977). Bioassays were also conducted under the same conditions using several other chlorinated ethanes. In general, the less chlorinated compounds were more toxic to *Daphnia* than to bluegill. Other studies on rainbow trout indicate an LC_{50} of greater than 100 mg/l in 13°C water of pH 7.1 and 40 mg/l hardness (Drury and Hammons 1979). The uptake of CO_2 was reduced by 50% in the alga *Phaeodactylum tricornutam* in a concentration of 340 mg/l (Pearson and McConnell 1975). No data were found on chronic or sublethal effects for freshwater organisms.

Chlorinated ethanes do not strongly bioaccumulate and the bioconcentration factor for 1,2-dichloroethane in bluegill was approximately 2 (U.S. EPA 1980a).

6.1.3 Marine Organisms

As was found for freshwater organisms, very little data exist regarding acute effects on marine biota; chronic effects data include only one study on reproduction of polychaetes. Pearson and McConnell (1975) studied the marine flatfish *Limnada limnada* and determined the LC_{50} to be 115 mg/l for 1,2-dichloroethane. Marine invertebrate toxicity values were found to be 2 mg/l for the mysid shrimp *Mysidopsis bahia* and greater than 433 mg/l for the alga *Skeletonema costatum* (U.S. EPA 1978).

*LC_{50} is the concentration that is lethal to 50% of the test organisms.

Static tests using 1,2-dichloroethane were conducted on the polychaete Ophryotrocha and the shrimp, Crangdon crangdon. In 300 mg/l 1,2-dichloroethane all shrimp in the tests were killed within 7 hours. After 24 hours the LC_{50} value was approximately 170 mg/l. Mortality decreased after 1-2 days, probably due to loss through volatilization. In shock experiments with the 1,2 isomer, in which the polychaetes were suddenly introduced into the test solution, all animals in concentrations of greater than 800 mg/l 1,2-dichloroethane were killed within 24 hours; in 400 mg/l, half of the test population was dead after the same time. During the following 8 days of the experiment, only 10% more of the animals died. In concurrent tests, wherein the concentration of the compound was successively increased, all animals in concentrations of less than 800 mg/l survived for at least 8 days. In 1000 mg/l, 75% of the test population was dead within 4 days (Rosenberg et al. 1975).

Sublethal effects of 1,2-dichloroethane on reproductivity of the marine polychaete Ophryotrocha labronica were also investigated. Eggs laid in concentrations of 50, 100, and 200 mg/l 1,2-dichloroethane showed hatching of 100%. In 400 mg/l hatching success decreased to approximately 10%, although the number of egg masses initially laid was not reduced. In 600 mg/l the average number of eggs per egg mass and the number of egg masses were reduced compared to those at lower concentrations of 1,2-dichloroethane. In shock experiments with 800 and 400 mg/l, almost the entire test population of adult O. labronica was killed within one day (Rosenberg et al. 1975).

6.1.4 Factors Affecting Toxicity of Dichloroethanes

No information was found in the literature concerning the effects of salinity, temperature, or other water quality factors on the toxicity of dichloroethanes.

6.1.5 Conclusions

According to the literature surveyed, the lowest concentration at which adverse effects of 1,2-dichloroethane have been detected in aquatic biota is 2.0 mg/l, which caused mortality in the mysid shrimp Mysidopsis bahia, a marine organism. Freshwater acute toxicity data were extremely limited and no chronic data were available. The range of toxic levels for the few freshwater species tested was approximately 200-550 mg/l.

The effects of 1,2-dichloroethane on marine organisms have been studied somewhat more extensively. The most sensitive organisms were the shrimp Crangdon crangdon, LC_{50} 170 mg/l, and the flatfish Limnada limnada, LC_{50} 115 mg/l. Acute toxicity levels for other marine species, including algae, polychaetes, and brine shrimp, were in the 300-500 mg/l range. Reproductivity in the polychaete Ophryotrocha labronica was affected in concentrations of greater than 200 mg/l.

The EPA has not set water quality criteria for aquatic life due to the lack of data (U.S. EPA 1980a).

In summary, although data are extremely limited, general concentration ranges can be suggested at which certain effects are seen in the laboratory. These ranges are not rigidly defined, and may overlap as a result of differences among species or environmental variables.

- 1.0 μg/l — This represents the detection limit for 1,2-dichloroethane generally reported in monitoring studies. No adverse effects have been observed at this level.
- 1.0 μg/l-2 mg/l — No adverse effects have been observed in this range.
- 2.0-100 mg/l — Concentrations in this range have been found toxic to mysid shrimp, a marine species.
- 100-300 mg/l — Concentrations of the 1,2 isomer acutely toxic to marine flatfish, Daphnia, marine shrimp, and several arthropods. No chronic data available for this range.
- 300-550 mg/l — Sublethal effects on reproductive viability in polychaetes reported for this range. Acute toxic effects on bluegill, marine algae Skeletonema costatum, adult Ophryotorcha, and brine shrimp Artemia; reduced oxygen uptake in freshwater algae.

6.2 EXPOSURE OF BIOTA

6.2.1 Introduction

Releases of dichloroethanes to the environment are primarily to the air during primary production or end-product manufacture. Large amounts of dichloroethanes are disposed of on land, usually by burial in landfills, and small amounts are discharged directly to water. Chapter 3.0 of this report addresses the sources and amounts of discharges of dichloroethanes to aqueous systems per year in the United States. The 1,2 isomer is a volatile compound with a half-life in river water of about 35 hours (see Chapter 4.0). Although washout of dichloroethanes may occur, it is not expected to be a dominant pathway to aquatic systems.

6.2.2 Monitoring Data

Overall, monitoring data for the dichloroethanes is quite limited; but there is some nationwide data from several sources.

During 1975 and 1976, 204 water samples were collected by the University of Illinois from 14 heavily industrialized U.S. river basins. The detection limit for dichloroethanes in these tests was 1 μg/l or greater. The 1,2 isomer was detected in 53 of the 204 samples, and most of these concentrations were near 1 μg/l. The Delaware River in general had higher concentrations, and one sample near Bridesburg, Pennsylvania was 90 μg/l (see Table 4-2).

Water quality monitoring data retrieved from STORET yield samples from 12 of the 18 EPA STORET major river basins in the continental United States (U.S. EPA 1980b). Dichloroethanes are not a frequently measured parameter, thus the data base is very limited. Very little monitoring data were available from the Texas and Louisiana Gulf coasts where there is a heavy concentration of dichloroethane production.

Of the 280 samples of dichloroethanes reported, nearly all the values were below the detection limit, generally 10 μg/l. There were several scattered incidences of value from 20-50 μg/l. Concentrations of greater than 50 μg/l were found in nine samples from five major river basins, including the areas of the Northeast and Southeast, and in the Ohio Upper Mississippi and Upper Missouri Rivers. In order to further examine the high concentrations, data were retrieved from the sampling stations within these five major river basins. Table 6-1 shows the location and source of these high dichloroethane concentrations.

6.2.3 Ingestion

No specific studies were found that addressed the uptake by or effects on aquatic organisms of dichloroethanes via ingestion.

6.2.4 Fish Kills

No data were found in the literature concerning any fish kills related to dichloroethanes in aquatic environments.

6.2.5 Conclusions

Given the shortage of monitoring data for dichloroethanes, it is difficult to estimate exposure levels of dichloroethanes in aquatic systems. Based on the available data, however, it would appear that where these compounds are detected, they are almost always found in low concentrations, generally lower than those levels which have been determined toxic to aquatic biota in laboratory studies, as discussed in Section 6.1. The infrequent higher concentrations may have occurred as a result of an accidental spill or some non-routine input from a specific plant to the environment. In cases where measurements were taken the same day or a few days later, concentrations had decreased. Given the short self-purification time of dichloroethanes in river water of 6-9 hours, as predicted by EXAMS (U.S. EPA 1980c), these concentrations probably did not persist for long. Overall, the concentrations to which aquatic biota are exposed on a nationwide basis are in the low μg/l range.

TABLE 6-1. MAXIMUM OBSERVED DICHLOROETHANE CONCENTRATIONS IN U.S. RIVER BASINS (1974-1978)

River Basin	Sampling Station/Area	Concentration	
		Isomer	µg/l
Wall Kill River (Middle Hudson River)	Ames Rubber Corp. Hamburg, NJ	1,1	110.0
St. John's River Basin	SCM Corp. Jacksonville, FL	1,1	200.0
Ohio River	The B.F. Goodrich Co. Louisville, KY	1,2	1100.0
Upper Mississippi River	Mississippi River Alton, IL	1,2 1,1	210.0; 98.0 1900.0
Lower Missouri River	Blue River near Missouri River confluence	1,2	60.0; 230.0

Source: U.S. EPA (1980b).

REFERENCES

Dawson, G.W.; Jennings, A.L.; Drozdowski, D.; Rider, E. The acute toxicity of 47 industrial chemicals to fresh and salt water fishes. J. Hazardous Mater. 1(4):303-318; 1977. (As cited in U.S. EPA 1980a)

Drury, J.S.; Hammons, A.S. Investigations of selected environmental pollutants: 1,2-dichloroethane. Washington, DC: Office of Toxic Substances, U.S. Environmental Protection Agency; 1979.

Pearson, C.R.; McConnell, G. Chlorinated C_1 and C_2 hydrocarbons in the marine environment. Proc. R. Soc. Lond. B. 189:305-322; 1975.

Rosenberg, R.; Grahn, O.; Johansson, L. Toxic effects of aliphatic chlorinated by-products from vinyl chloride production of marine animals. Water Res. 9:607-612; 1975.

U.S. Environmental Protection Agency (U.S. EPA). Ambient water quality criteria for chlorinated ethanes. Washington, DC: Office of Water Regulations and Standards, U.S. Environmental Protection Agency; 1980a.

U.S. Environmental Protection Agency (U.S. EPA). In depth studies on health and environmental impacts of selected water pollutants. Washington, DC: U.S. Environmental Protection Agency; 1978. (As cited in U.S. EPA 1980a)

U.S. Environmental Protection Agency (U.S. EPA). Exposure analysis modeling system. AETOX 1. Athens, GA: Environmental Systems Branch, Environmental Research Laboratory, Office of Research and Development, U.S. Environmental Protection Agency; 1980c.

U.S. Environmental Protection Agency (U.S. EPA). STORET. Washington, DC: Monitoring and Support Division, U.S. Environmental Protection Agency; 1980b.

7.0 RISK CONSIDERATIONS

7.1 INTRODUCTION

This chapter will consider the integration of effects and exposure or risk to humans and other biota. This will be done as quantitatively as possible in view of available data. However, in many cases, due to the number and type of assumptions made, the results obtained must be qualified. The scenarios which involve a great deal of uncertainty will be noted.

7.2 HUMANS

7.2.1 Health Effects

The compound 1,2-dichloroethane has been shown to be carcinogenic in rats and mice when administered by gavage. Squamous-cell carcinoma of the forestomach, hemangiosarcoma, and mammary adenocarcinoma have been noted in rats; alveolar/bronchiolar adenomas, mammary adenocarcinomas, and endometrial tumors have been observed in mice. In addition, lifetime dermal exposure of mice to 1,2-dichloroethane produced an elevated incidence of benign lung tumors. However, both rats and mice exposed to 1,2-dichloroethane via inhalation showed no increased incidence of malignant tumors.

Several possible explanations of these differences in results were proposed in Chapter 5.0 and will only be mentioned here briefly. The conflicting results do not appear to be explained by differences in purity of the administered compound or pharmacokinetics. There may be a difference in strain sensitivity in the different tests. Another possibility is that the gavage route might result in the production of carcinogenic metabolites of 1,2-dichloroethane in the gut that would not occur upon inhalation. In essence, however, this disparity of results remains to be resolved.

Studies with 1,2-dichloroethane suggest that it is an effective mutagen in the presence of a metabolic activation system, such as is found *in vivo*. In general, no teratogenic or reproductive effects have been noted as a result of inhalation of 1,2-dichloroethane. One Russian study reported fetotoxic effects, but similar exposure of the same species at concentrations of five times that used in the Russian study induced no significant treatment-related effects.

Human ingestion of 15 ml 1,2-dichloroethane has been lethal, although ingestion of 50 ml has been survived. Exposures to 40-400 mg/m^3 via inhalation for at least a few weeks have been associated with such effects as CNS depression, GI upset, and kidney and liver damage.

Little is known regarding the toxicity of 1,1-dichloroethane. Carcinogenicity tests (gavage) have been inconclusive due to poor survival. No information is available regarding mutagenic activity. Fetotoxic effects have been observed in rats upon inhalation of high levels of 1,1-dichloroethane (24,300 mg/m^3) during gestation. However, no effects were noted in rats similarly exposed to 15,390 mg/m^3. Chronic toxic effects appear to be similar to these observed for 1,2-dichloroethane.

The effects discussed above, as well as in Chapter 5.0 are summarized with their corresponding effect levels in Tables 7-1 and 7 2.

7.2.2 Exposure

Section 5.2 discusses the potential for human exposure to dichloroethanes. These results are summarized in Table 7-3. The discussion in Section 5.1 noted no major differences in the pharmacokinetics or tissue distribution of 1,2-dichloroethane due to exposure route. The 1,2 isomer has been indicated as a carcinogen via ingestion, but results have been negative for inhalation exposures. Therefore, these exposure routes will be differentiated in the following discussion. In addition, it should be noted that 100% absorption has been assumed.

As can be seen in the table, ingestion exposure to 1,2-dichloroethane of the general population is around 7 μg/day, resulting primarily from ingestion of contaminated surface waters, and from residues in spices. It has been estimated that about 5 million persons are exposed to detectable levels of 1,2-dichloroethane in surface water. Persons utilizing groundwater supplies could receive a lower exposure, on the order of 6 μg/day. The contribution from inhalation in rural areas is probably very low. However, in urban areas (involving up to 14 million persons) inhalation exposures may contribute up to 28 μg/day. The exposure to 1,2-dichloroethane of persons living in highly industrial areas and near production facilities would be dominated by inhalation, with a maximum exposure of about 800 μg/day.

Certain other subpopulations, however, also receive high exposures. Of particular concern are the high levels reported in groundwater, resulting in exposures up to 800 μg/day. The source of these reported exposures is unknown, but may be due to land disposal of solvent wastes or other wastes containing 1,2-dichloroethane. The data are too limited to determine the prevalence of these exposures, but considering the widespread use of 1,2-dichloroethane, these incidents may not be uncommon.

Since 1,2-dichloroethane is apparently transferred into mother's milk, breast-fed infants may also receive a high exposure to the compound if their mothers are exposed to high levels of this compound.

In addition, persons may occasionally be exposed to higher levels of the 1,2 isomer in industrial areas. The maximum estimated exposure is 1300 μg/day; however, this may not represent a chronic exposure.

TABLE 7-1. ADVERSE EFFECTS OF 1,2-DICHLOROETHANE

Adverse Effect	Species	Lowest Reported Effect Level	No Apparent Effect Level
Carcinogenesis	Rat (Osborne-Mendel)	47 mg/kg/day technical grade by gavage, 5 days/week for 78 weeks	--
	Mouse (B6C3F1)	149 mg/kg/day technical grade by gavage, 5 days/week for 78 weeks	--
	Rat (Sprague-Dawley)	--	600 mg/m^3, 99.8% pure
	Mouse (Swiss)	--	99.8% pure, 7 hours/day, 5 days/week for 78 weeks
Heritable	*Drosophila* (sex-linked recessive)	4.9 g/l	--
Mutation	*Drosophila* (somatic mutation)	0.5% in diet	--
Teratogenesis	Rat (Sprague-Dawley)	--	400 mg/m^3, 7 hours/day, days 6-15 of gestation
Neurological disorders	Human	100 mg/m^3, 8 hours/day, 5 days/week for 6 months-5 years	difficult to deduce from literature
Lethality (ingestion)	Human	LDL_0 15 ml	--
	Rat	LD_{50} 700 mg/kg	--

Source: Data taken from Section 5.1.1 of this report.

TABLE 7-2. ADVERSE EFFECTS OF 1,1-DICHLOROETHANE ON MAMMALS

Adverse Effect	Species	Lowest Reported Effect Level	No Apparent Effect Level
Carcinogenesis	Rat Mouse	No conclusive evidence is currently available, but some dose-related marginal increases in some tumor types noted for both rats and mice in a gavage study complicated by poor survival.	--
Fetotoxicity (delayed ossification)	Rat	24,300 mg/m^3, 7 hours/day, days 6-15 of gestation	15,390 mg/m^3, 7 hours/day, days 6-15 of gestation
Mutagenesis	—	No data available	--
Chronic oral toxicity	—	No data available	--
Lethality (ingestion)	Rat	LD_{50} 700 mg/kg	--

Source: Data taken from Section 5.1.2 of this report.

TABLE 7-3. ESTIMATED HUMAN EXPOSURE TO 1,2-DICHLOROETHANE

General Population

Route	Subpopulation Size	Exposure (μg/day)
Ingestion		
Drinking water		
surface	∿112 million	<2
	∿5 million	4
ground	unknown[a]	0.6
	∿70 million	<0.4
Food		
pepper	large	5
fish	may be large	0.13
Inhalation		
Rural areas	55 million	< 0.4
Urban areas (levels resulting from gasoline use)	14 million	0.8-28
	152 million	<0.8
Industrial areas	may be large	32-120
In the vicinity of production facilities	300,000	80-800
	6.2 million	8-80
	6 million[b]	0.8-8
Persons using self-service gas stations	30 million	0.1

TABLE 7-3. ESTIMATED HUMAN EXPOSURE TO 1,2-DICHLOROETHANE (Continued)

Isolated Subpopulations

Route	Exposure (μg/day)
Ingestion	
Drinking water	
surface	9.6
ground - maximum	800
Food	
breast-fed infants - maximum from occupationally exposed mothers	1000
Inhalation	
occupational	48,000
industrial - maximum	1300

Acute Exposures

Inhalation	
gasoline spill	960-7680 μg
Dermal	
gasoline spill	70 μg
solvent spill	10 μg
pesticide spill	185,000

[a]A number of 5 million was discussed in Section 5.2. However, due to the considerable uncertainty associated with this estimate, it was not included in this table to be associated with risk.

[b]This population is probably underestimated.

Source: See Section 5.2, as well as Table 5-13 for sources of information as well as derivation of estimates.

Spills of products containing 1,2-dichloroethane can result in dermal and inhalation exposure, although these exposures are not of a chronic nature. Of particular concern is the use of 1,2-dichloroethane as a pesticide, which may contain 700,000 mg/l active ingredient.

The major sources of uncertainty in the exposure estimates presented in Table 7-3 are:

- Lack of adequate monitoring data for groundwater resulting in an inability to estimate the size of the population exposed as well as the levels.
- Limited data available on residues of 1,2-dichloroethanes in spices and other foods.
- No information available on levels in breast milk from exposed mothers, aside from cases of extremely high occupational exposures.
- Lack of monitoring data to validate air concentration models in urban areas. Monitoring of industrial areas has been very limited, aside from production facilities.

Exposures to 1,1-dichloroethane are largely unquantified. Drinking water exposure may be in the range of 0.4-0.6 μg/day. Surface water contamination is relatively rare, but presence in groundwaters appears to be more common. Maximum levels have resulted in exposures of up to 23,000 μg/day. Inhalation exposures of 1,1-dichloroethane are significantly lower than the 1,2 isomer, or about 5 μg/day in urban areas.

7.2.3 Human Risk Evaluation

7.2.3.1 Carcinogenicity

Ambient Water Quality Criteria - Human Health

The Environmental Protection Agency has established an ambient water concentration for the maximum protection of human health from the potential carcinogenic effects of 1,2-dichloroethane exposure through ingestion of water and contaminated aquatic organisms (U.S. EPA 1980). The water quality criterion is based on the induction of hemangiosarcomas in male Osborne-Mendel rats given a time-weighted average dose of 47 mg/kg/day technical grade 1,2-dichloroethane by gavage for a period of 78 weeks (NCI 1978). The concentration of 1,2-dichloroethane in water calculated to keep any additional lifetime cancer risk below 10^{-6} is 0.94 μg/l (U.S. EPA 1980).

No human health criterion has been set for 1,1-dichloroethane due to lack of human effects data.

Risk Extrapolation

The data selected for extrapolation are the NCI data which demonstrated increased alveolar/bronchial adenomas in male mice and increased mammary adenocarcinomas in female rats (NCI 1978). These data are listed in Table 7-4. Other types of carcinomas were observed in both species, such as hemangiosarcoma (upon which the EPA calculated human risk [U.S. EPA 1980]), but the implied dose-response relationships were not as severe. It must be noted that interpretation of these results for human risk assessment is subject to a number of important qualifications and assumptions:

- Although positive carcinogenic findings exist, there have been contradictory negative findings in tests with the same species using different routes of exposure. No adequate explanation has been found for these disparate results, as discussed above.

- Assuming that the positive findings indeed provide a basis for extrapolation to humans, the estimation of equivalent human doses involves considerable uncertainty.

- Due to inadequate understanding of the mechanisms of carcinogenesis, there is no scientific basis for selecting among several alternate dose-response models which yield widely differing results.

In order to deal with the large uncertainties inherent in extrapolation to humans, a conservative approach has been taken in the conversion to equivalent human doses, and three commonly used dose-response models have been applied to establish a range of potential human risk. A discussion of these models may be found in a report by Arthur D. Little, Inc. (1980).

Calculation of Human Equivalent Doses

The experimental results in Table 7-4 for both mice and rats show three animal groups: the vehicle controls (zero dose), the low-dose group, and the high-dose group. In both species the low-dose results were not statistically significant, so that the high-dose results alone were used for extrapolation to humans. The first step in this extrapolation was to calculate the equivalent human dose rate corresponding to the experimental treatment. The approach recommended by the EPA was followed, which accounts for the duration of exposure relative to the animal lifespan and normalizes the dose rate according to body surface area (U.S. EPA 1979). This approach is conservative, in that it results in a lower equivalent human dose than would be obtained from simple multiplication of animal dose rate (mg/kg/day) by human body weight. Whether surface area or body weight is a more appropriate normalization factor is still open to debate. The former method yields a dose rate about 6 times lower for rats, and about 14 times lower for

TABLE 7-4. CARCINOGENICITY OF 1,2-DICHLOROETHANE

Species Tested	Average Body Weight (kg)	Time-Weighted Average Dose (mg/kg/day)	Observed Response (%)	Observed Effects	Duration of Exposure (week)	Animal Lifespan (week)
Male mice	0.025	195	15/48 (31%)	alveolar/ bronchial adenomas	78	90
		97	1/47 (2%)			
		0 (vehicle controls)	0/20			
Female rats	0.32	95	18/50 (36%)	mammary adenocinomas	78	110
		47	1/50 (2%)			
		0 (vehicle controls)	0/20			

Source: NCI (1978).

mice. Thus, the choice of method introduces an uncertainty of roughly an order of magnitude into the risk estimates.

The actual calculation of equivalent human dose was performed as follows, assuming an average human weight of 70 kg:

$$\underset{\text{(mg/day)}}{\text{Human dose}} = 70\text{ kg} \times \underset{\text{(mg/kg/day)}}{\text{animal dose}} \times \left(\frac{\text{animal weight}}{\text{human weight}}\right)^{\frac{1}{3}} \times \left(\frac{5}{7}\right) \times \left(\frac{\text{duration of exposure}}{\text{animal lifespan}}\right)$$

The correction factor for body surface area is the cube root of the ratio of animal to human weight, as shown by the EPA (1979). A correction factor of 5/7 was also included since the animals were treated only on five days per week. As a result, we conclude that:

- the dose of 195 mg/kg/day which produced a 31% effect in male mice is equivalent to a human dose of approximately 600 mg/day

- the dose of 95 mg/kg/day which produced a 36% effect in female rats is equivalent to a human dose of approximately 560 mg/day

These results are roughly the same, with slightly greater potency implied by the rat experiment. Therefore, only the rat data were used in subsequent risk estimation. Using a linear extrapolation, the daily dose corresponding to a human per capita risk of 10^{-6} is about 1.5 μg/day.

Three separate extrapolations were performed using the female rat data (i.e., 36% response at a human equivalent of 560 mg/day). The "one-hit" extrapolation is performed by simply assuming a constant increase in probability of tumor induction for each increment of dose. This leads to a gradually rising dose-response curve which is nearly linear at sufficiently low doses. The log-probit model assumes that carcinogenic doses are log-normally distributed, resulting in an S-shaped dose-response curve with a threshold-like effect. These two models, generally speaking, tend to bound the range of risk estimates that could be obtained from other dose-response models. The one-hit model is conservative, in that it probably over-estimates the true response at low doses, whereas the log-probit model usually results in much lower risk estimates for typical human exposure levels.

For the one-hit extrapolation, the rat data were used to solve for the coefficient B in the following equation:

$$\text{Prob. of response} = 1 - e^{-B\,(\text{dose})}$$

$$0.36 = 1 - e^{-B\,(560)}$$

$$B = -\frac{1}{560}\ln\,(1-0.36)$$

$$= 8 \times 10^{-4}$$

The human per capita risk at low dose levels may then be found simply by multiplying the coefficient B by the dose in mg/day.

$$\text{Prob. of response} \approx B\ (\text{dose})$$

The expected incidence of cancer in a given population may then be found by multiplying the probability of response times the size of the population.

For the log-probit extrapolation, the rat data were used to solve for the "probit" intercept A in the following equation:

$$\text{Prob. of response} = \Phi\left(A + \log_{10}\,(\text{dose})\right)$$

where Φ is the cumulative normal distribution function.

This equation makes the usual assumption that the log-probit dose-response curve has unit slope with respect to the log-dose (Arthur D. Little, Inc. 1980). Thus:

$$0.36 = \Phi\left(A + \log\,(560)\right)$$

Using tables of the standard normal distribution we find that A is approximately equal to -3.2. This value may then be used to find the probability of a response at various dose levels from the above equation.

The multi-stage model, described by Arthur D. Little, Inc. (1980), was also applied to the combined rat and mouse data. The multi-stage model generally gives dose-response estimates intermediate to the one-hit and log-probit models. The multi-stage model assumes that:

$$\text{Prob. of response} = 1-e^{\left(-[ax^2 + bx + c]\right)},$$

where x is the dose, and the parameters a,b, and c are estimated from the data. A maximum likelihood method was used for this estimation, aided by a computer program which performed a heuristic search for the best fit. The parameter b dominates for small doses, and a dominates for large doses.

In Table 7-5 the risk estimates obtained from these models are summarized. The estimated number of cancers per million exposed population is shown for daily exposures ranging from 1 μg to 1 mg. The gap between the estimates is large in the low-dose region; only at doses above 10 μg/day does the log-probit dose/response curve begin to rise more steeply.

TABLE 7-5. ESTIMATED NUMBER OF EXCESS LIFETIME CANCERS PER 1,000,000 POPULATION EXPOSED TO DIFFERENT 1,2 DICHLOROETHANE LEVELS BASED ON FOUR EXTRAPOLATION MODELS

Extrapolation Method	Number of Excess Lifetime Cancers Per Million Population at Exposure Level[a]			
	1 μg/day	10 μg/day	100 μg/day	1000 μg/day
One-hit extrapolation	0.8	8	80	800
Log-probit extrapolation	negligible	0.1	13	690
Multi-stage model	0.5	5	50	500
CAG[b]	0.5	5	50	500

[a]Estimated excess lifetime cancers (per million exposed population) are based on several different dose-response extrapolation models. The lifetime excess incidence of cancer represents the increase in probability of cancer over the normal background incidence, assuming that an individual is continuously exposed to 1,2-dichloroethane at the indicated daily intake over their lifetime. There is considerable variation in the estimated risk due to uncertainty introduced by the use of laboratory rodent data, by the conversion to equivalent human dosage, and by the application of hypothetical dose-response curves. In view of several conservative assumptions that were utilized, it is likely that these predictions overestimate the actual risk to humans.

[b]Carcinogen Assessment Group (see U.S. EPA 1980).

Source: Arthur D. Little, Inc., estimates.

The dose corresponding to a per capita risk of 10^{-5} is about 100 μg/day according to the log-probit model, which is about eight times greater than the level obtained from the linear model. The multi-stage model predicts a risk intermediate between these two levels in the range of 1 μg/day to 100 μg/day. Thus, there is a substantial range of uncertainty concerning the actual carcinogenic effects of 1,2-dichloroethane. The minimal response of rats and mice at the lower experimental doses (see Table 7-4) suggests that the true dose-response curve falls well below the linear estimate. However, present scientific methods do not permit a more accurate or definitive assessment of human risk.

7.2.3.2 Risk to Exposed Populations

The relative carcinogenic risks associated with major routes of exposure to 1,2-dichloroethane are shown in Table 7-6, using a range of risk based on three dose-response extrapolation models. There is considerable controversy over the most appropriate model for performing such extrapolations. Moreover, additional uncertainty is introduced into the risk estimates by the choice of a particular set of laboratory data, by the conversion techniques used to estimate human equivalent doses, and by possibly differences in susceptibility between humans and laboratory species. Due to the use of a number of conservative assumptions in the risk calculations, the results shown in Table 7-6 most likely overestimate the actual risk to humans.

For most persons, ingestion exposures are less than 7 μg/day (Table 7-6). This exposure could result in a range of <0.1-5.6 excess lifetime cancers per million persons exposed, depending on the extrapolation model used. Assuming, a population size of 187 million (see Table 7-3), an estimated <19-1047 excess lifetime cancers could occur in the exposed population. It should be noted, however, that this population is exposed to drinking water containing largely undetectable levels of 1,2-dichloroethane. In addition, little is known regarding levels of this compound in food. The exposure shown in Table 7-6 is based on an estimated consumption of pepper containing 1,2-dichloroethane. It is unknown how prevalent such contamination is, and if the concentration reported is representative of levels in pepper in the United States.

A smaller subpopulation is exposed to detectable levels of 1,2-dichloroethane in surface waters and may receive about 4 μg/day. In addition, a very small subpopulation may be exposed to about 800 μg/day resulting from the consumption of contaminated groundwater. The estimated range of carcinogenic risk is 400-600 excess lieftime cancers per million exposed at this level. While the population size cannot be quantified, it is expected to be small.

Inhalation exposures typical of rural and urban areas are generally lower than ingestion expsoures as is shown in Table 7-6, although, as discussed above, little information is available.

TABLE 7-6. ESTIMATED RANGES OF CARCINOGENIC RISK TO HUMANS DUE TO 1,2-DICHLOROETHANE FOR VARIOUS ROUTES OF EXPOSURE

Route	Estimated Average Lifetime Exposure (ug/day)[a]	No. Excess Estimated Lifetime Cancers (per million exposed)[b]		
		One hit	Log Probit	Multi-Stage/ CAG
Drinking water	< 2	1.6	< 0.1	1
Food	~ 5	4	< 0.1	3
Inhalation				
rural	< 0.4	0.3	< 0.1	0.2
urban	< 0.8	0.6	< 0.1	0.4
industrial	32-120	30-100	1-20	20-60
in the vicintiy of production facilities	0.8-80	0.6-60	< 0.1-10	0.4-40
Isolated subpopulations				
groundwater (maximum)	800	600	500	400
inhalation in industrial area	1300	1000	1000	700

[a]Data taken from Table 7-3.

[b]Estimated excess lifetime cancers are given based on three different dose-response extrapolation models. The lifetime excess incidence of cancer represents the increase over the normal background incidence assuming that an individual is continuously exposed to 1,2-dichloroethane at the indicated daily intake over their lifetime. There is considerable variation in the estimated risk due to uncertainty introduced by the use of laboratory rodent data, by the conversion to equivalent human dosage, and by the application of hypothetical dose-response curves. In view of several conservative assumptions that were utilized (see Section 7.2.3.1), it is likely that these predictions overestimate the actual risk to humans.

If one assumes that persons residing in highly industrialized areas receive about 100 μg/day, and if 1,2-dichloroethane is assumed to be carcinogenic via the inhalation route (two major assumptions of which the latter is unsupported by experimental data), this exposure would correspond to a predicted risk of 13-80 excess lifetime cancers/million population. This population is expected to be some subset of the 14 million persons identified as exposed to 1,2-dichloroethane in urban areas at levels greater than 0.8 μg/day as a result of its use in leaded gasoline. Only a small part of the exposure (and therefore the risk) to this population is attributable to waterborne routes.

The small subpopulations residing in highly industrialized areas, exposed at maximum reported levels, would be at a higher risk; an estimated 700-1000 excess lifetime cancers per million population. Approximately 300,000 persons have been identified as residing close enough to production facilities to receive up to 800 μg/day.

Again, all of these estimates are based upon the various extrapolation models used and their inherent uncertainties, as well as the uncertainties described above in the exposure assumptions.

The risks to 1,1-dichloroethane cannot be evaluated due to the lack of both effects and exposure data. However, it is clear that a potential risk exists due to high concentrations reported in groundwater in some locations.

7.3 BIOTA

The lowest concentration at which adverse effects of 1,2-dichloroethane have been observed in aquatic biota is 2000 μg/l, which caused mortality in the mysid shrimp. Freshwater acute toxicity data were limited, but the range of toxic levels for the few species tested was about 200,000-555,000 μg/l. No chronic data were available. No toxicity data at all were available for 1,1-dichloroethane. EPA has not set water quality criteria for aquatic life for either of these two compounds, because of the very limited data.

The monitoring data indicate that levels are much lower than the reported effect levels, almost always lower than the detection limit of 10 μg/l. Thus, the limited data suggest that aquatic organisms are not at risk to dichloroethanes.

REFERENCES

Arthur D. Little, Inc. Integrated exposure risk assessment methodology. Contract 68-01-3857. Washington, DC: Monitoring and Data Support Division, U.S. Environmental Protection Agency; 1980.

National Cancer Institute (NCI). Bioassay of 1,2-dichloroethane for possible carcinogenicity. Tech. Report NCI-CG-TR-44. Washington, DC: National Cancer Institute; 1978.

U.S. Environmental Protection Agency (U.S. EPA). Ambient water quality criteria for chlorinated ethanes. Washington, DC: Office of Water Regulations and Standards, U.S. Environmental Protection Agency; 1980.

U.S. Environmental Protection Agency (U.S. EPA). Guidelines and methodology used in the preparation of health effect assessment chapter of the consent decree water criteria documents. Federal Register 44(52): 15641; 1979.

APPENDIX A

MANUFACTURE OF 1,2-DICHLOROETHANE

A.1 INTRODUCTION

1,2-Dichloroethane (commonly known as ethylene dichloride or EDC) is the highest volume chlorinated organic compound currently manufactured in the United States. First synthesized in 1795 by Dutch chemists (Hardie, 1964), it is now produced by the direct chlorination or oxy-chlorination of ethylene. Nearly 80% of all 1,2-dichloroethane produced is used for vinyl chloride manufacture; accordingly, demand is inextricably tied to vinyl chloride production. Other uses of 1,2-dichloroethane are as a chemical intermediate in the manufacture of methyl chloroform, tetrachloroethylene, vinylidene chloride, trichloroethylene, ethyleneamines, and as an additive in tetraethyl-lead and antiknock mixtures. Additional applications, totaling <1% of 1,2-dichloroethane production, include use as a solvent or fumigant.

Production of 1,2-dichloroethane was approximately 5.9×10^6 kkg according to U.S. International Trade Commission (USITC, 1979) records. U.S. manufacturers, their capacities, and locations are shown in Table A-1 and Figure A-1, respectively. In recent years, 1,2-dichloroethane production has reflected trends in vinyl chloride production rates. Small declines occurred during the years of 1971, 1974, and 1975 (as a result of recession and feedstock shortages), but overall 1,2-dichloroethane production has had a clear upward growth trend since shortly after World War II. During the 1960s, ethylene became much less expensive than acetylene as a feedstock. Accordingly, the balanced process displaced the classical, more costly, process for vinyl chloride production from acetylene and significantly increased 1,2-dichloroethane demand. Market growth projections through 1981 are expected to average about 4 to 5 %, (Chemical Marketing Reporter, 1977), corresponding to production of approximately 6.1 million metric tons in 1981. As a result of expansion of available production facilities, annual nameplate capacity will be 8.2 million metric tons by the second half of 1980 (SRI, 1979a); past production rates have been estimated as between 60 to 80% of capacity (EPA, 1979a; SRI, 1979b).

The 1978 consumption pattern for 1,2-dichloroethane is shown in Table A-2. Vinyl chloride production is anticipated to rise 3% in the coming year, despite a general business slowdown in 1980 (C&EN, 1979). While a general decline in trichloroethylene production is expected as a result of environmental controls, 1,2-dichloroethane demand will be met by the substitute solvents, 1,1,1-trichloroethane and tetrachloroethylene. Overall growth in chlorinated hydrocarbon solvent markets is likely to be small, however. With the market for leaded gas forecast to disappear by about 1990 for passenger cars, a general decline is anticipated in the use of 1,2-dichloroethane as a

Table A-1. 1,2-Dichloroethane Capacity, 1978

Plant	Capacity (10^3kkg)
Borden Chemical Co.	
Geismar, LA	225
Continental Oil Co.	
Lake Charles, LA	524
Diamond Shamrock Corp.	
Deer Park, TX	145
LaPorte, TX	720
Dow Chemical Corp.	
Freeport, TX	726
Oyster Creek, TX	499
Plaquemine, LA	952
Ethyl Corporation	
Baton Rouge, LA	317
Pasadena, TX	118
B.F. Goodrich Co.	
Calvert City, KY	154
ICI Americas, Inc.	
Baton Rouge, LA	315
PPG Industries, Inc.	
Lake Charles, LA	544
Shell Chemical Co.	
Deer Park, TX	544
Norco, LA	544
Stauffer Chemical Co.	
Long Beach, CA	154
Union Carbide Corp.	
Taft, LA	68
Texas City, TX	68
Vulcan Chemical Co.	
Geismer, LA	140

Source: SRI, 1979a

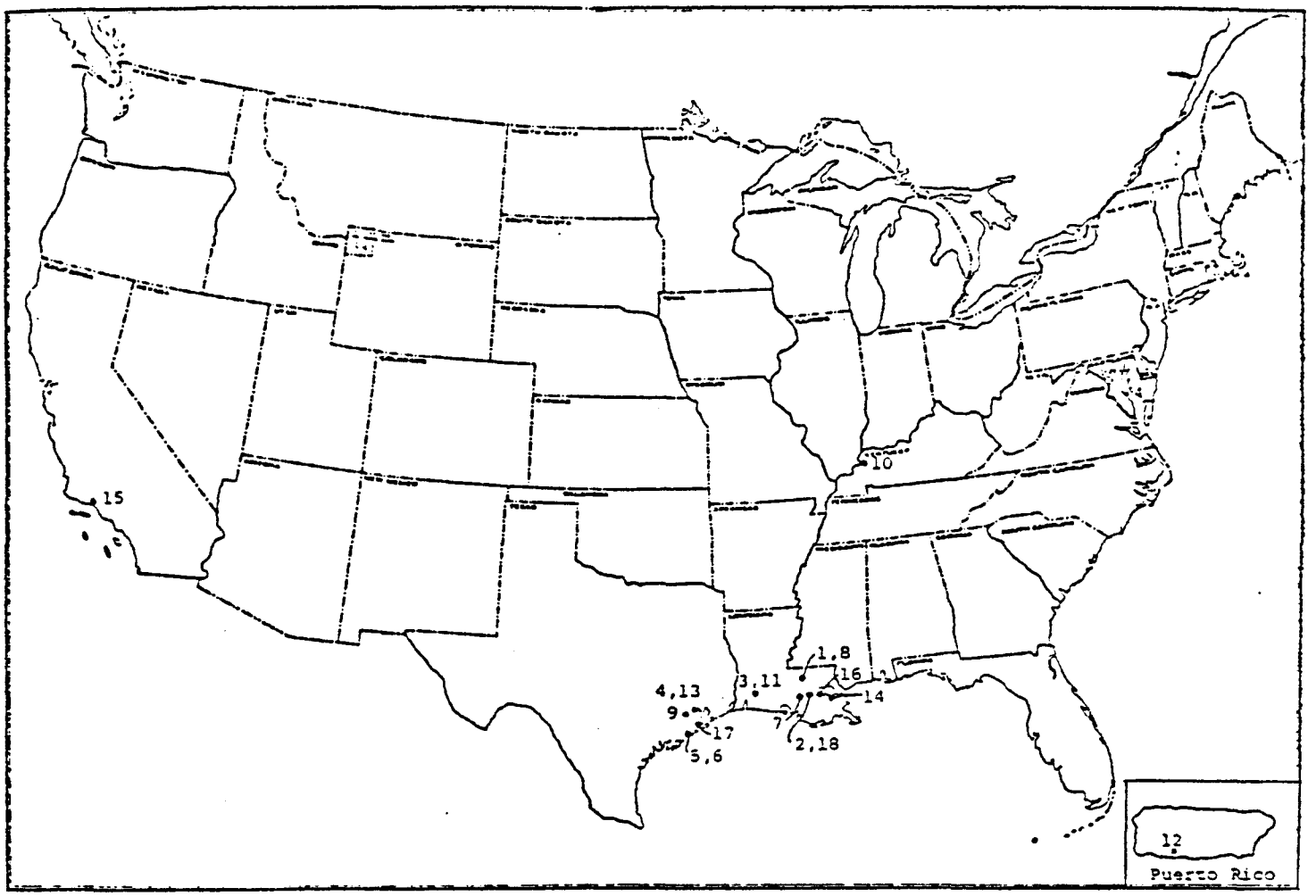

(1) ICI Americas, Inc., Baton Rouge, LA
(2) Borden Chemical Co., Geismar, LA
(3) Conoco Chemicals, Lake Charles, LA
(4) Diamond Shamrock Corp., Deer Park, TX
(5) Dow Chemical Co., Freeport, TX
(6) Dow Chemical Co., Oyster Creek, TX
(7) Dow Chemical Co., Plaquemine, LA
(8) Ethyl Corp., Baton Rouge, LA
(9) Ethyl Corp., Houston, TX
(10) B.F. Goodrich Co., Calvert City, KY
(11) PPG Industries, Inc., Lake Charles, LA
(12) PPG Industries, Inc., Guayanilla, P.R.
(13) Shell Chemical Co., Deer Park, TX
(14) Shell Chemical Co., Norco, LA
(15) Stauffer Chemical Co., Long Beach, CA
(16) Union Carbide Corp., Taft, LA
(17) Union Carbide Corp., Texas City, TX
(18) Vulcan Materials Co., Geismar, LA

Figure A-1. Locations of 1,2-Dichloroethane Facilities

Table A-2. 1,2-Dichloroethane Consumption, 1978

Market	Consumption	
	Volume, 10^3 kkg	%
Major Uses:[b]		
Vinyl Chloride monomer	4,800	81
1,1,1-Trichloroethane	200	3
Ethylenediamine	230	4
Tetrachloroethylene	110	2
Trichloroethylene	110	2
Vinylidene Chloride	100	2
Lead Scavenger	72	1
Minor Uses:	5	
Paint, coating or adhesive solvent	1.3	
Extraction solvents	1.3	
Cleaning solvents	1	
Grain Fumigant	0.5	
Polysulfide manufacture	>0.1	
Diluent in pesticides and herbicides	0.4	
Film manufacture	0.2	
Exports	310	5
Imports	neg	
TOTAL	5,900	100

Source: EPA, 1978b.

a) Numbers may not add due to rounding.

b) See text for derivation of consumption figures.

lead scavenger in gasoline (Jacobs, 1979). Annual growth rates forecast for the remaining 1,2-dichloroethane end uses are as follows: tetrachloroethylene, 6%; ethyleneamines, 7%; and vinylidene chloride, 7%. Export markets are expected to remain constant (SRI, 1979a).

Chloroethanes are produced commercially via two distinct but related processes: direct chlorination of ethylene in the presence of a catalyst or oxy-chlorination of ethene, also in the presence of a catalyst. Within oxy-chlorination plants, further distinction is made as to whether air or oxygen is used as a feedstock. For either process, both yield and selectivity are high for 1,2-dichloroethane manufacture, ranging from a nearly quantitative yield and 99% selectivity for direct chlorination to 93-97% yield and 93-95% selectivity for oxy-chlorination processes. Though both processes are independent, the balanced process combines both direct and oxy-chlorination processes to produce 1,2-dichloroethane, which is then pyrolyzed to produce vinyl chloride. Only five U.S. plants produce EDC by other means: Ethyl Corporation (Pasadena, TX); Borden Chemical Co.; and Union Carbide Corporation (two plants) have a combined annual capacity of 5×10^5 kkg EDC via direct chlorination; Vulcan Materials Company (Geismer, LA) has an annual capacity of 1.4×10^5 kkg EDC via oxy-chlorination (see Table A-1).

Most chloroethane manufacturing facilities produce more than just 1,2-dichloroethane and vinyl chloride. Each of the remaining chlorinated ethanes/ethylenes is, in fact, manufactured using the same basic feedstocks -- chlorine, ethylene, and hydrogen chloride; and each, to a greater or lesser degree, is a by-product of 1,2-dichloroethane manufacture, whether intended or not. Therefore, a modern, fully integrated VCM facility might reasonably produce, in addition to vinyl chloride and 1,2-dichloroethane, ethyl chloride; 1,1-dichloroethane, 1,1,1- and 1,1,2-trichloroethane, 1,1,1,2- and 1,1,2,2-tetrachloroethane, 1,1-dichloroethylene, tetrachloroethylene, and trichloroethylene. The relationship between these processes is shown in Figure A-2. The combination of products from individual plants is shown in Table A-3. Discharges from 1,2-dichloroethane manufacture are listed in Table A-4.

A.2 DIRECT CHLORINATION

Production of 1,2-dichloroethane via direct chlorination of ethane is generally carried out in the liquid phase, using 1,2-dichloroethane as a solvent at temperatures ranging from 40 to 120°C and pressures of 1 to 3 atmospheres. Iron(III) chloride is normally used as a catalyst for direct chlorination processes, but in theory, any Friedel Crafts catalyst might be used.

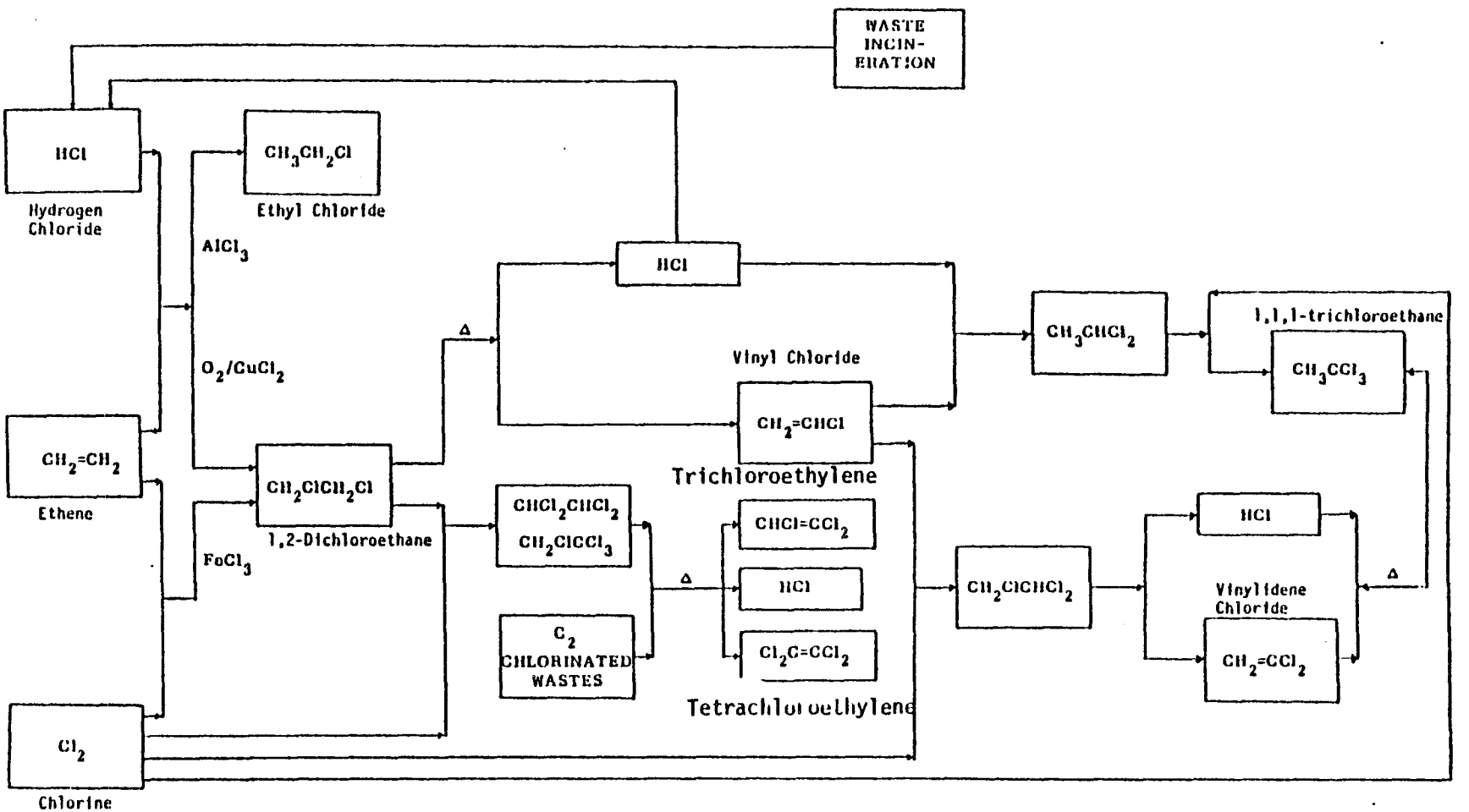

Figure A-2. C_2 Chlorinated Hydrocarbon Manufacture

Table A-3. Production of 1,2-Dichloroethane and Related C_2 Products, by Facilities and Locations

PLANT	1,1-Dichloroethane	1,2-Dichloroethane	Vinyl Chloride	1,1,1-Trichloroethane	Ethyleneamines	Trichloroethene	Tetrachloroethene	Vinylidene Chloride
Borden Chemical Co.								
Geismar, LA		●	●					
Continental Oil Co.								
Lake Charles, LA		●	●					
Diamond Shamrock Corp.								
Deer Park, TX		●				●	●	
LaPorte, TX		●	●					
Dow Chemical Corp.								
Freeport, TX	●	●	●	●	●	●	●	●
Oyster Creek, TX		●	●				●	
Plaquemine, LA	●	●	●	●		●		●
Dupont and Company								
Wilmington, DE							●	
Ethyl Corporation								
Baton Rouge, LA		●	●			●	●	
Pasadena, TX								
B.F. Goodrich Co								
Calvert City, KY		●	●					
ICI Americas, Inc.								
Baton Rouge, LA		●	●					
Monochem Inc.								
Geismar, LA			●					
PPG Industries, Inc.								
Lake Charles, LA	●	●	●	●		●	●	●
Shell Chemical Co.								
Deer Park, LA		●	●					
Norco, LA		●	●					
Stauffer Chemical Co.								
Long Beach, CA		●	●				●	
Union Carbide Corp								
Taft, LA		●			●			
Texas City, TX		●			●			
Vulcan Chemical Co.								
Geismar, LA		●		●			●	
Wichita, KS							●	

Table A-4. 1,2-Dichloroethane Summary Materials Balance

Process	Producer	Location	Capacity (10^5kkg)[a]	Production (kkg)[b]	Estimated Environmental Dispersion (kkg) Air	Water	Land
Direct Chlorination[c]	Borden Chemical Co.	Geismar, LA	2.3	180,000	500		44
	Ethyl Corp.	Pasadena, TX	1.2	90,000	270		23
	Union Carbide Corp.	Taft, LA	0.7	55,000	150		14
		Texas City, LA	0.7	55,000	150	neg	14
Oxy-Chlorination[d]	Vulcan Materials Co.	Geismar, LA	1.4	110,000	1,300		280
Balanced Process[e]	(Totals)		65	5,400,000	20,000		830
	Continental Oil Co.	Lake Charles, LA	5.2	430,000	1,600		66
	Diamond Shamrock Corp.	Deer Park, TX	1.5	120,000	460		19
		LaPorte, TX	7.2	600,000	2,200		92
	Dow Chemical Corp.	Freeport, TX	7.3	600,000	2,200		93
		Oyster Creek, TX	5.0	420,000	1,500		64
		Plaquemine, LA	9.5	790,000	2,900		120
	Ethyl Corp.	Baton Rouge, LA	3.2	270,000	980		41
	B. F. Goodrich Co.	Calvert City, KY	4.5	370,000	1,400	neg	57
	ICI Americas, Inc.	Baton Rouge, LA	3.2	270,000	980		41
	PPG Industries Inc.	Lake Charles, LA	5.4	540,000	1,700		69
	Shell Chemical Co.	Deer Park, TX	6.3	520,000	1,900		80
		Norco, LA	5.4	450,000	1,700		69
	Stauffer Chemical Co.	Carson, CA	1.5	120,000	460		19

a) Values have been rounded to two significant figures, neg. is <1 kkg.

b) Production is 79% of capacity, EPA, 1978a; USITC, 1979; SRI, 1979b.

c) Air emissions: storage facilities (0.0006 kg EDC/kg EDC produced) and scrubber vent (0.0022 kg/kg). Water discharge: scrubber waste (0.0018 kg/EDC produced) uncontrolled (see p.3-5 for controlled releases). Both from EPA, 1974a. Land dispersion: 0.0007 kg tar/kg EDC produced, EPA, 1974a; up to 35% EDC in EDC tar (Jensen et al., 1975).

d) Emission factors for all media from EPA, 1974b. Air: process vent gas (0.007 kg EDC/kg EDC produced) and distillation vent gas (0.0045 kg EDC/kg EDC produced) Water: 0.0006 kg EDC/kg EDC produced (uncontrolled discharge, see p.3-5 for controlled releases). Land: heavy ends 0.0025 kg EDC/kg EDC produced. Storage facilities: 0.0006 kg EDC/kg EDC produced.

e) Total atmospheric emissions: 0.0027 kg EDC/kg EDC consumed from distillation vent, 0.0010 kg EDC/kg from direct chlorination and 0.0010 kg EDC/kg oxy-chlorination. Total water discharge based on 190 gpm flow rate, EDC concentration 1500 - 3600 ppm, and 80% capacity operation (uncontrolled, see p.3-5 for controlled releases), EPA, 1978; EPA, 1974a. Total land discharge tar concentration 0.8 kg tar/kkg VCM produced, 36% EDC in tar, Lunde, 1965. Discharge of EDC by company using balanced process based on individual company capacity as a percent of total production; totals do not add due to rounding.

Source: EPA, 1978a; SRI, 1979b

Approximately equimolar amounts of chlorine (containing a small amount of oxygen, either added as air or present as an impurity) and ethylene are fed to the reactor through separate distributors as depicted in Figure A-3. The reactor in essence, is an empty tower in which liquid 1,2-dichloroethane, chlorine, and ethylene flow concurrently upward. Both gas streams dissolve and react in the liquid phase; further, the rate of reaction is mass transfer controlled and related to the superficial inlet velocity of the feedstreams (Balasubramanian, et al., 1966). The reaction is catalyzed by continuous addition of iron(III) chloride (~500 ppm) dissolved in a portion of the 1,2-dichloroethane feedstream. The reaction is exothermic (~45 kcal/mole) and heat is removed by passing a large portion of the product stream through a heat exchanger (not shown).

Species emitted from the reaction vessel vent include: oxygen, nitrogen, ethylene (sufficient to keep the mixture out of the explosive range), methyl chloride, ethyl chloride, 1,2-dichloroethane, and other low boiling reaction products. 1,2-Dichloroethane is recovered by refrigeration and the noncondensible gases are vented.

The product stream is withdrawn from the top of the reactor and, with the exception of dissolved catalyst, is of sufficient purity for vinyl chloride production. Iron(III) chloride can be removed in a number of ways, including adsorption (e.g., activated carbon), washing, or by distillation (including operating the reactor at the boiling point of 1,2-dichloroethane and taking the product overhead).

A.3 OXY-CHLORINATION

Oxy-chlorination of ethylene is conducted at elevated temperatures (225-325°C) and pressures (1 to 15 atmospheres) in the presence of a supported copper(II) catalyst. Like direct chlorination, both liquid and vapor phase oxy-chlorination processes are known. Commercial processes, however, are carried out exclusively in the vapor phase. The process shown in Figure A-4 incorporates features from several patents and is not representative of any single plant.

Approximately stoichiometric amounts of ethene and hydrogen chloride are mixed and fed as one stream to the reactor. Preheated, purified air (or oxygen) is fed as a separate stream to the reactor. Although the theoretical amount of hydrogen chloride and oxygen required are 2 moles and one-half mole per mole of ethene, respectively, both are commonly used in excess (≈10%) to favor 1,2-dichloroethane formation.

Both fixed bed and fluidized bed reactors are used commercially, although temperature control of the former is more difficult and

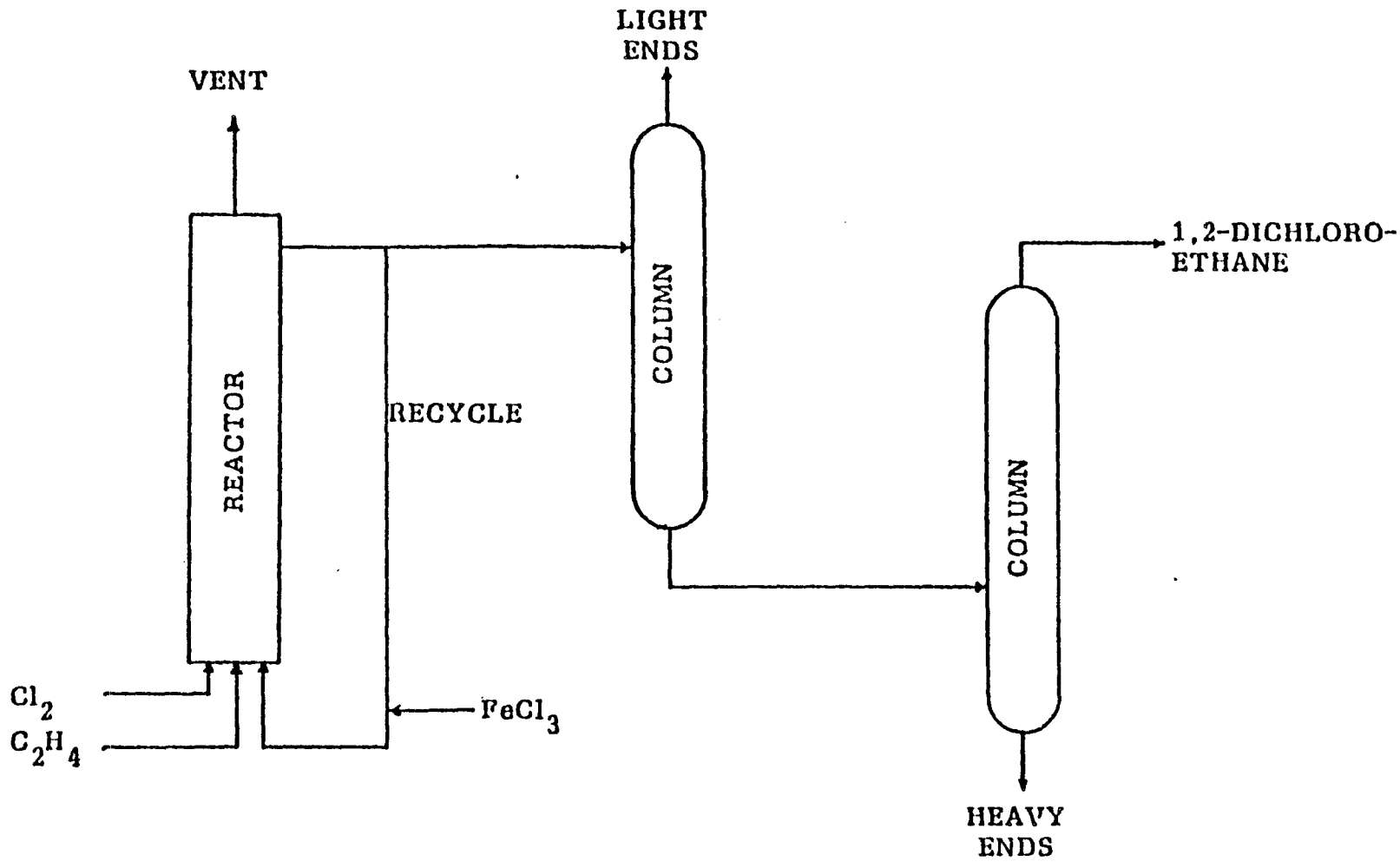

Figure A-3. Manufacture of 1,2-Dichloroethane Via Direct Chlorination

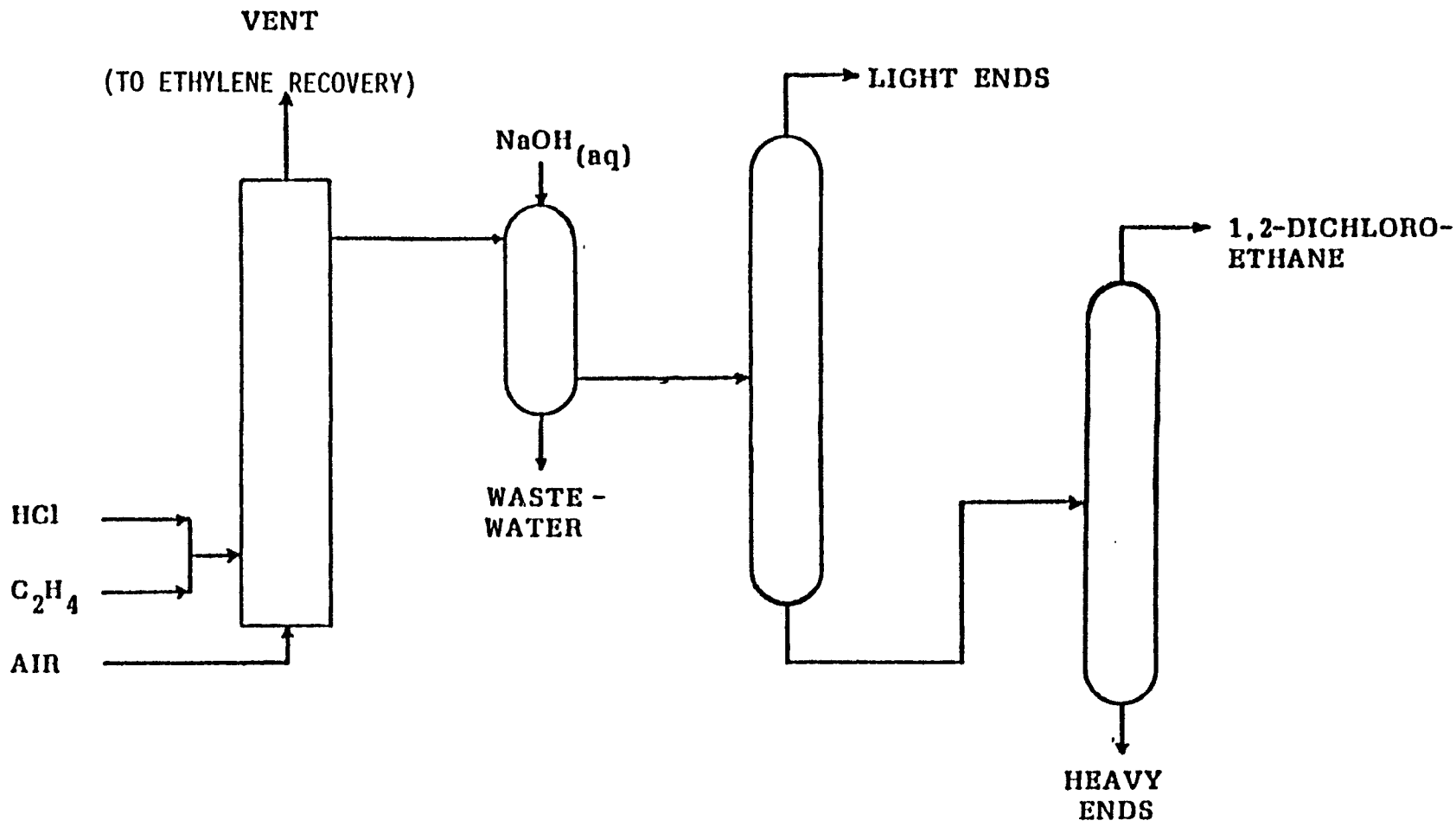

Figure A-4. Manufacture of 1,2-Dichloroethane Via Oxy-Chlorination

requires graded catalyst packing (Vulcan, 1965). Fixed bed oxy-chlorinations, are normally run with excess ethylene (relative to HCl). Excess ethylene is recovered in subsequent reaction steps by direct chlorination (Severino, 1977), although if oxygen is used rather than air, excess ethene may be directly recycled. Fluidized bed reactors offer good temperature control by virtue of effective heat transfer between catalyst particles and by use of internal cooling surfaces (Antwerp et al., 1970). Catalyst attrition and carry-over may present certain operating problems; catalyst makeup however, in fluidized bed systems is relatively easy.

Both reactor systems control reaction temperature (225°-325°C) by low pressure steam generation. The product gases are quenched, and scrubbed with dilute caustic (≈6% NaOH). After separation, crude 1,2-dichloroethane is purified by distillation in several stages in which water and other low boiling components as well as high boiling components (b.p. >85°C) are removed. This product stream is typically of 99.5% purity. The composition of crude 1,2-dichloroethane from direct chlorination and oxy-chlorination is shown in Table A-5.

The oxy-chlorination process discharges larger amounts of 1,2-dichloroethane than the direct process. For oxy-chlorination these include: emissions vented from the scrubbing column and product storage tanks; wastewater from scrubbing of the vented gases and caustic washing of crude EDC; and solid waste in the form of tars produced in the heavy ends column (see Figures A-4 and A-5; and Table A-4). 1,2-Dichloroethane discharge from direct chlorination is much less than from oxy-chlorination and occurs largely from the reactor vent and product storage tanks.

A.4 THE BALANCED PROCESS: VINYL CHLORIDE MANUFACTURE

Virtually all vinyl chloride capacity in the United States is based upon dehydrochlorination of 1,2-dichloroethane (SRI, 1979b); pyrolysis, however, yields co-product hydrogen chloride on an equimolar basis. Hydrogen chloride, in turn, serves as a chlorine source for oxy-chlorination of ethane. By using both processes -- direct chlorination and oxy-chlorination -- vinyl chloride is produced from two commodity chemicals, ethylene and chlorine, without producing by-product hydrogen chloride. These processes in combination are known as the "balanced" process and provide about 92% of the vinyl chloride manufactured in the United States. Vinyl chloride monomer producers, their location, and their respective capacities are listed in Table A-6.

Current yields of dehydrochlorination of 1,2-dichloroethane are on the order of 50% to 60% with selectivities to vinyl chloride of 96% to 99% (McPherson et al., 1979). Based on the current yield of 1,2-dichloroethane pyrolysis with equimolar production of hydrogen

Table A-5. Composition of Crude 1,2-Dichloroethane

Component	Reactor Effluent, Mole %	
	Direct Chlorination[a,b]	Oxy-Chlorination[c]
Ethene	0.427	0.535
Vinyl Chloride	-	0.10
Ethyl Chloride	0.342	2.322
Vinylidene Chloride	-	0.029
Trans-dichloroethene	0.017	0.021
Cis-dichloroethene		0.047
Chloroform	-	0.011
1,2-Dichloroethane	99.123	96.031
1,1,1-Trichloroacetaldehyde	-	0.533
1,1,2-Trichloroethane	0.039	0.463
1,1-Dichloroethane	0.009	-
Methyl Chloride	0.043	-

[a]Adapted from Lunde, 1967. A selectivity to 1,2-dichloroethane of 99.7% and 95% conversion of ethene has been assumed.
[b]Leach and Price (1967) report chlorobenzene and bis (2-chloroethyl ether).
[c]Adapted from Vulcan, 1965. Fixed bed oxy-chlorination: 230-290°C, 4.6 atm, 13.2 wt% $CuCl_2$ on alumina; 14 and 6 mole % excess oxygen and hydrogen chloride respectively.

Table A-6. Vinyl Chloride Producers, Locations, and 1978 Capacity

Producer	Location	Capacity ($x10^5$ kkg)
Borden	Geismar, LA	1.4
Continental Oil	Lake Charles, LA	3.2
Diamond Shamrock Corporation	LaPorte, TX	4.5
Dow Chemical Corporation	Freeport, TX	0.91
	Oyster Creek, TX	3.2
	Plaquemine, LA	5.7
Ethyl Corporation	Baton Rouge, LA	1.5
B.F. Goodrich Company	Calvert City, KY	4.5
ICI Americas	Baton Rouge, LA	1.4
Monochem Incorporated	Geismar, LA	1.4[a]
PPG Industries Incorporated	Lake Charles, LA	1.8
Shell Chemical Company	Deer Park, TX	3.8
	Norco, LA	3.2
Stauffer Chemical Company	Carson, CA	0.79
Total		37.3[b]

Source: SRI, 1979b.
[a] Acetylene feedstock.
[b] 1978 Production: 3.1×10^6 kkg (USITC, 1979), 83% of capacity.

chloride (and allowing for losses), capacities of oxy-chlorination and direct chlorination processes are approximately equal. Based on a reaction yield of 96% and 1978 vinyl chloride production of 3.15 x 10^6 kkg (92% of which was based upon 1,2-dichloroethane), 4.8 x 10^6 kkg of 1,2-dichloroethane were consumed to produce 2.85 x 10^6 kkg of vinyl chloride in 1978 (SRI, 1979a; USITC, 1980). This 1,2-dichloroethane figure is at variance with production reported by USITC. This difference is attributed to ambiguity in the manner in which production is defined by the USITC. In particular, captive production (that portion of a product used as a chemical intermediate) is not always adequately reflected in the numbers reported to the USITC by a manufacturer, thus distorting production rates released by the USITC.

A typical flow diagram for vinyl chloride monomer manufacture via the balanced process is shown in Figure A-5. Crude 1,2-dichloroethane from the oxy-chlorination process is washed with dilute caustic to remove hydrogen chloride and chlorinated by-products (notably chloral) and dried. "Crude" 1,2-dichloroethane from direct chlorination may be combined with this stream and purified for pyrolysis; alternatively 1,2-dichloroethane from direct chlorination may be of sufficient purity for pyrolysis without further purification. After dehydro-chlorination, the reactor effluent is quenched with 1,2-dichloroethane and separated by fractional distillation in a series of columns. Hydrogen chloride is recycled to the oxy-chlorination reactor while recovered 1,2-dichloroethane is returned to the 1,2-dichloroethane purification system.

A.5 TREATMENT OF PROCESS WASTES

Vinyl chloride monomer is used to manufacture polyvinyl chloride resins, homopolymers, and copolymers. Emissions of EDC from use of VCM are apparently small. PPG Industries, for example, estimates a 1,2-dichloroethane concentration of $\sim$10 ppm in final product VCM (Denison, 1980). Assuming this concentration to be representative of all VCM manufacturers, 30 kkg of 1,2-dichloroethane are estimated to be present and, therefore, potentially lost to the environment from VCM use in 1978.

A new method for VCM manufacture, the "TRANSCAT" process, may reduce process discharges from VCM manufacture significantly. Developed by the Lummus Company and tested on a large pilot plant scale, but not currently in commercial use, the method uses ethane and chlorine or HCl as starting materials (McPherson, et al., 1979). A notable advantage of this method of VCM manufacture is the reduction of organic gaseous emissions. Vent streams are said to include only CO_2, N_2, O_2, and H_2O vapor (EPA, 1979a). If this process proves to be commercially effective, 1,2-dichloroethane emissions from VCM manufacture could be drastically reduced.

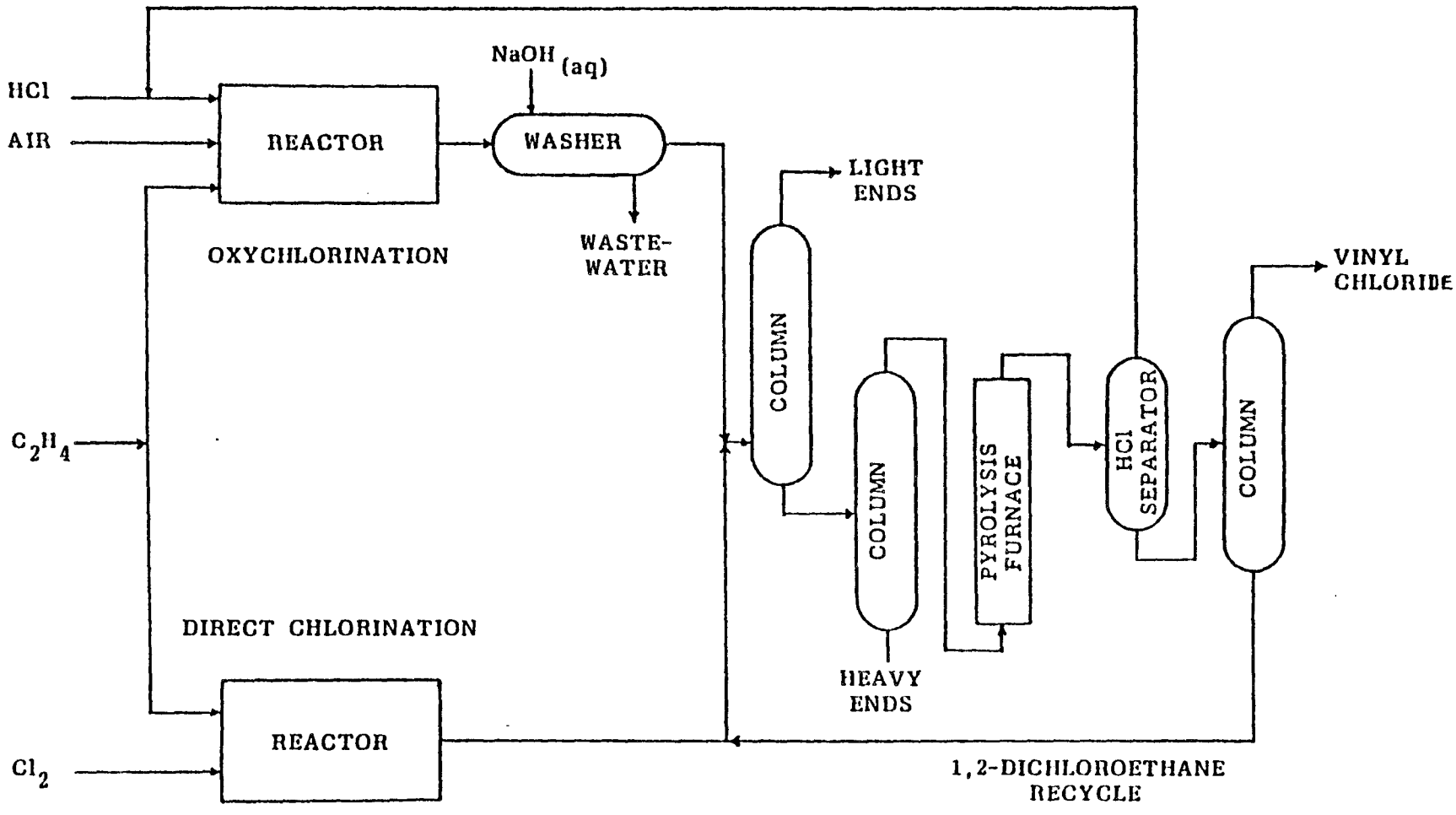

Figure A-5. The Balanced Process for Vinyl Chloride Manufacture

A.6 1,2-DICHLOROETHANE FROM ETHYLENE OXIDE MANUFACTURE

A small portion (≈0.2% in 1978) of 1,2-dichloroethane production results from recovery as a by-product during ethylene oxide manufacture via the chlorohydrin process. Once a significant source of 1,2-dichloroethane, the chlorohydrin process has been superceded by direct oxidation processes. In 1978 the chlorohydrin process was used by the DOW Freeport plant and accounted for approximately 3% of ethylene oxide production; this process has reportedly been discontinued. The principal process waste stream is a lime slurry (≈8500 l/kkg of product). Based on 1978 ethylene oxide production via the chlorohydrin process (≈58,000 kkg) and 1,2-dichloroethane process emission factors both air emissions and water discharges of 1,2-dichloroethane are negligible (i.e., <1 kkg).

A.7 INADVERTENT SOURCES OF 1,2-DICHLOROETHANE RELEASES

In general, any man-made activity in which a chemical is released to the environment is an inadvertent (unintentional) source of that chemical. A particularly important class of inadvertent sources is found within the chemical industry. Chemical species do not react via a single reaction pathway; depending on the nature of the reactive intermediate there are a variety of pathways which lead to a series of reaction products. Often, and certainly the case for reactions of industrial significance, one pathway may be greatly favored over all others, but never to total exclusion. Thus, by appropriate process design and proper control of reaction conditions, manufacturers maximize product yield while minimizing waste production. At its simplest, then, manufacture of a chemical product necessarily consists of three steps: (1) combination of reactants under suitable conditions to yield the desired product; (2) separation of the product from the reaction matrix (e.g., by-products, coproducts, reaction solvents); and (3) final purification of the product. These waste products, thus, constitute additional sources of a chemical or chemicals to the environment. Such sources of a chemical are not limited to those of chemical manufacturing processes however; disinfection of drinking water or wastewaters by chlorination, for example, is a potentially important inadvertent source of chlorinated organic hydrocarbons.

Because 1,2-dichloroethane is used primarily as a manufacturing intermediate for other C_2 chlorinated hydrocarbons, discussion of inadvertent sources of emissions from manufacture of other chemicals is deferred to Appendix C (Uses of 1,2-Dichloroethane).

The chlorination of drinking waste and wastewater (see Appendix D, Municipal Disposal of Dichloroethane) has come under scrutiny recently, largely due to the discovery that chlorination of residual organic matter in such waters may lead to the formation of chlorinated degradation products. Contamination of municipal drinking waters has

been investigated in three recent studies: (National Organic Monitoring Survey (EPA, 1977b); (2) National Organics Reconnaissance Survey for Halogenated Organics (Symons et al., 1975); (3) and a local survey conducted by the state of California (Phillippe, 1980).

The National Organic Monitoring Survey examined 113 community water supplies, representing all types of sources and treatment process, in three phases during a twelve month period. 1,2-Dichloroethane is detected neither in high concentration nor frequently (see Table C-9). Moreover, the source of 1,2-dichloroethane is not readily apparent though the data suggest that chlorination is not a significant source of 1,2-dichloroethane found in these waters. This result is supported by the similarity of 1,2-dichloroethane concentrations of Phase III samples collected with (quenched) or without (terminal) a chlorine reducing agent. A similar conclusion is derived from the National Organic Reconnaissance Survey. In approximately one-third of the cases where 1,2-dichloroethane was present in finished waters, it was also present in the raw water. For the cases where 1,2-dichloroethane was found in finished water but not in raw water, it was suggested as attributable to artifacts caused by the varying limits of detection of the analysis, rather than formation during chlorination (Symons et al., 1975).

Finally, the California Regional Water Quality Control Board has detected 1,2-dichloroethane (up to 52 ppm) in well water on the property of Aerojet General Rocket Plant in Sacramento. Investigators have presumed this contamination to be linked solely to leaching from solvent disposal sites on the facility's property, rather than introduced by chlorination treatment.

On the basis of these studies it is assumed that chlorination of drinking water contributes negligible amounts of 1,2-dichloroethane to the environment. Disposal per se (e.g., POTWs and Urban Refuse) will be discussed in Appendix D.

Table A-7. Composition of Oxy-Chlorination Wastewater

Component	Concentration
HCl	1.49 - 5.78%wt [a]
Chloral	14100 - 16900 ppm
1,2-Dichloroethane	1500 - 3360 ppm
Ethanol	290 - 520 ppm
Acetaldehyde	0 - 100 ppm
Monochloroacetaldehyde	0 - 300 ppm

Source: EPA, 1976

[a] Determined by titration.

Table A-8. Composition of Vinyl Chloride Tars

Species	% Weight
Trichloroethene	0.2
Tetrachloroethene	0.2
1,1,1-Trichloroethane	0.4
1,2-Dichloroethane	36
1,2-Dichlorobutane + Unknown Butadiene	0.3
Dichlorobutenes	1.8
Chlorobenzene	0.7
1,1,2-Trichloroethane + 1,1,1,2-Tetrachloroethane	15
1,2-Dichlorohezane	0.6
2-Chloroethanol + 1,4-Dichlorobutane	0.7
Pentachloroethane	0.6
Hexachloroethane	0.6
1,2,3-Trichlorobutane	1
1,2,3-Trichloropropane	0.8
1,1,2,2-Tetrachloroethane	5
bis(2-Chloroethyl) ether	3
1,2,4-Trichlorobutane	5
C_4-C_6-Cl_x	14
Unspecified Aromatics	2
Unknown	2
Freon-Soluble Material	4
Freon-Insoluble Material	6
Water	0.1
	100

Source: EPA, 1975.

Table A-9. Composition of Vinyl Chloride Heavy Ends

Species	% Weight
1-Chlorobutane	0.3
Tetrachloroethene	0.9
1,1,1-Trichloroethane	0.8
1,2-Dichloroethane	15
1,2-Dichlorobutane	0.7
Dichlorobutenes	5
Chlorobenzene	2
1,1,2-Trichloroethane + 1,1,1,2-Tetrachloroethane	58
1,2-Dichlorohexane	1
2-Chloroethanol + 1,4-Dichlorobutane	0.6
Pentachloroethane	0.5
Hexachloroethane	0.4
1,2,3-Trichlorobutane	0.9
1,2,3-Trichloropropane	0.8
1,1,2,2-Trichloroethane	5
bis(2-Chloroethyl) ether	1
1,2,4-Trichlorobutane	1
C_4-C_6-Cl_x	4
Water	0.1
Unknown	2
	100

Source: EPA, 1975.

APPENDIX B

MANUFACTURE OF 1,1-DICHLOROETHANE

B.1 INTRODUCTION

Once used as an anaesthetic and as a solvent, 1,1-dichloroethane occurs largely as an unisolated intermediate during the production of 1,1,1-trichloroethane. Since 1,1-dichloroethane has been identified as a carcinogen by the National Institute of Health, increased industrial use (other than intermediate uses) is not expected. Specialty chemical companies, however, do distribute small amounts of 1,1-dichloroethane for use as a solvent or as a chemical intermediate. A spokesperson for Aldrich Chemical Company estimated that 400-500 kg were sold annually (Aldrich Chemical Company, 1980); Guardian Chemical Corporation indicated that sales figures were proprietary information but annual sales were "small kilo quantities" (Guardian Chemical Corporation, 1980). On the basis of these data, industry sales probably amount to <10 kkg.

Although not usually isolated as a consumer product, 1,1-dichloroethane can be manufactured by several processes: addition of HCl to vinyl chloride in the presence of aluminum chloride, ferric chloride, or zinc oxide catalysts:

$$H_2C{=}CHCl + HCl \longrightarrow H_3CCHCl_2$$

or addition of HCl to acetylene in the presence of a mercuric-ferric chloride catalyst:

$$HC{\equiv}CH + 2HCl \longrightarrow H_3CCHCl_2.$$

The vinyl chloride process, followed by chlorination of 1,1-dichloroethane is used to produce approximately 95% of the 1,1,1-trichloroethane in the U.S. (SRI, 1979b). (Capacity, locations and manufacturing methods, of U.S. 1,1,1-trichloroethane producers are discussed in Appendix C). Based on reaction stoichiometry, reaction yield ($\approx$95%), and that portion of 1,1,1-trichloroethane produced via the vinyl chloride process (90-95%), 2.2 - 2.3 x 10^5 kkg of 1,1-dichloroethane were produced as an intermediate for captive use in 1,1,1-trichloroethane production in 1978 (Denison, 1980).

Releases of 1,1-dichloroethane from this process as listed in Table B-1 are chiefly atmospheric and originate from the distillation vents (EPA, 1979b). Assuming 2.2 kg of 1,1-dichloroethane are emitted per kkg of 1,1,1-trichloroethane produced (Elkin, 1969), an estimated 600 kkg of 1,1-dichloroethane were emitted to the atmosphere in 1978.

Table B-1. Materials Balance of 1,1-Dichloroethane in 1978[a]

Source	kkg of 1,1-Dichloroethane	Estimated Environmental Releases, kkg		
		Air	Water	Land
PRODUCTION[b,c]				
Hydrochlorination of vinyl chloride	230,000	607	1	2
INADVERTENT				
1,2-Dichloroethane manufacture via the[d] balanced process		200	neg	neg
1,2-Dichloroethane manufacture via[e] direct chlorination		300	neg	neg

a) All values rounded to two significant figures.

b) The bulk of 1,1-dichloroethane production is as an unisolated intermediate; approximately 10 kkg are produced and sold for solvent application by specialty chemical manufacturing firms.

c) Use as a solvent is assumed to be relatively small amounts which do not warrant recovery. Releases from solvent use are distributed 66% to air, 24% to land, and 10% to water by analogy to trichloroethylene (EPA, 1981).

d) Based upon 5.1×10^6 kkg 1,2-dichloroethane produced via the balanced process and an emission factor of 0.04 kg 1,1-dichloroethane/kkg 1,2-dichloroethane produced (Lunde, 1965).

e) Based upon 380×10^3 kkg 1,2-dichloroethane production via direct chlorination of ethylene and an emission factor of 0.8 kg 1,1-dichloroethane/kkg 1,2-dichloroethane produced (Lunde, 1965).

No specific data concerning the occurrence of 1,1-dichloroethane in solid waste residue from 1,1,1-trichloroethane manufacture are available. The total VOC emissions from these residues, however, are 1 kg per kkg of product; release of 1,1-dichloroethane from solid waste disposal is therefore expected to be small (EPA, 1979b).

1,1-Dichloroethane has also been detected in waste gas streams from production of 1,2-dichloroethane by oxy-chlorination (Lunde, 1965). Total discharges of 1,1-dichloroethane from this source are approximately 200 kkg annually. 1,1-Dichloroethane has not been detected in the wastewater from 1,2-dichloroethane manufacture. Discharge of 1,1-dichloroethane during manufacture of other chlorinated hydrocarbons is probable, but specific data are lacking. Based on reaction chemistry only, 1,1-dichloroethane formation as a by-product is favored in manufacturing processes where free radical chlorination is predominant or at least significant. Processes in which 1,1-dichloroethane formation is probable but unverified include: 1,1,1-trichloroethane (ethane-based process), trichloroethylene, tetrachloroethylene, and epichlorohydrin (allyl chloride) manufacture.

APPENDIX C

USES OF 1,2-DICHLOROETHANE

C.1 INTRODUCTION

This material balance has arbitrarily treated the manufacture of vinyl chloride monomer (VCM) within the context of EDC production (see Appendix A), rather than as an EDC use per se. The following descriptions and discussions of the remaining industrial use categories for 1,2-dichloroethane are divided into two subgroups: manufacturing intermediates (e.g., for tri- and tetrachloroethylene, ethyleneamines, polysulfide elastomers) or dispersive end uses (e.g., fumigant, solvent). The consumption pattern for EDC is shown in Table C-1.

C.2 1,1,1-TRICHLOROETHANE

Approximately 4% or 2×10^5 kkg of 1,2-dichloroethane produced in 1978 was used as a feedstock for 1,1,1-trichloroethane (methyl chloroform) manufacture (SRI, 1979a). The predominant use of 1,1,1-trichloroethane is as a metal-cleaning solvent; additional applications are as a vapor pressure depressant in aerosol formulations, and as a solvent in adhesive, coating, and drain cleaner formulations. Though once suggested as a replacement for trichloroethylene, 1,1,1-trichloroethane demand has remained relatively constant from 1976 to 1979. In the short term, domestic demand is forecast to decline 10% to 20% in 1980. Production should remain relatively constant over the long term (Mannsville Chemical Products, 1979). The producers of 1,1,1-trichloroethane, along with geographical locations and production capacities and processes, are listed in Table C-2. 1,1,1-Trichloroethane production totalled 290×10^3 kkg in 1978 (USTIC, 1979).

A simplified flow diagram for production of 1,1,1-trichloroethane is shown in Figure C-1. 1,1,1-Trichloroethane is produced chiefly by hydrochlorination of vinyl chloride (obtained from EDC) to 1,1-dichloroethane, which is then thermally or photochemically chlorinated:

$$CH_2{=}CHCl + HCl \rightarrow CH_3CHCl_2 \rightarrow CH_3CCl_3 + HCl$$

Since 1979, when PPG Industries placed its vinylidene-based process on standby and opened a new vinyl chloride-based operation (Dehn, 1979), nearly all of the 1,1,1-trichloroethane producers in the U.S. have been using the latter process. The one exception is the Geismer, Louisiana plant of Vulcan Materials Company, which manufactures 1,1,1-trichloroethane by noncatalytic chlorination of ethane.

In 1978, approximately 1 kkg of 1,2-dichloroethane (1,100 kg from the vinyl chloride process and 60 kg from the ethane process) was emitted to the atmosphere, largely from process distillation vents.

Table C-1. 1,2-Dichloroethane Materials Balance: Uses, kkg/yr[a]

Use Category	1,2 Dichloroethane Input (kkg)	Estimated Environmental Dispersion (kkg) Air	Water	Land
Manufacturing Intermediate[b]				
1,1,1-Trichloroethane	200,000	1	neg	neg
Ethyleneamines[c]	230,000	360	20	20
Trichloroethene[d]	110,000	63	29	neg
Tetrachloroethene[e]	110,000	75	35	neg
1,2-Dichloroethene[f]	100,000		neg	
Lead scavenger[g]	72,000	700	neg	neg
Minor uses				
Paints, coatings, adhesives[h]	1,300	1,300	neg	neg
Extraction solvent[i]	1,300	1,300	neg	neg
Cleaning solvent[j]	1,000	660	100	240
Polysulfide elastomers[k]	15	neg	1	neg
Grain fumigant[l]	500	500	neg	neg
Pesticide carrier[m]	350	175	neg	175
Film manufacture[n]	150	8	neg	neg
Exports[o]	310,000			
Imports[o]	neg			
Total	1,140,000	5142	185	435

a) Based on amount of product derived from 1,2-dichloroethane and reaction stoichiometry (SRI, 1979a). Figures may not add due to rounding.

b) Air: 1) 0.004g EDC/kg 1,1,1-trichloroethane produced (distillation vent gas), for ethane- and vinyl chloride-based processes controlled by incineration (EPA, 1979b). 1-10 ppm EDC in 1,1,1-trichloroethane streams based on industry estimates (Denison, 1980) Aquatic discharges are believed to be insignificant based on process configuration. 1,2-dichloroethane discharge to land is believed to be negligible based upon recycling of solid waste streams to carbon tetrachloride/tetrachloroethane production.

c) Input based on 64 x 10^3 kkg ethylenediamine (EDA) produced (SRI, 1979b) and reaction yield of 45% (Lichenwalter and Cour, 1969).

d) EDC residual level in TCE streams = 10-100 ppm (Denison, 1980); air: 3.1 g/kg Trichloroethylene, 85% control (EPA, 1979). Water: 0.42 kg H_2O/kg Trichloroethylene, 510 µg EDC/l (Catalytic, 1979). Production = 135,000 kkg Trichloroethylene (SRI, 1979a).

e) Air: 3.1 g/kg Tetrachloroethyene, 85% control (EPA, 1979). Water: 0.42 kg H_2O/kg Tetrachloroethylene, 510 µg EDC/l (Catalytic, 1979). Production = 161,000 kkg Tetrachloroethylene (SRI, 1979a).

f) No EDC detected in waste streams, see text.

g) Combined discharge from gasoline blending, filling and "breathing" of storage tanks, and refueling of automobiles; see text.

h) Used as 1) solvent to dissolve binder and thin coatings or paints and 2) as a solvent cement for thermoplastic materials. All EDC is assumed to evaporate.

i) Includes extraction of spices oleoresins and animal feeds. Assume solvent recovery of 95% (Lo, 1980). Permissable residues in spices: 30 ppm, feed: 300 ppm (Federal Food, Drug and Cosmetic Act). Aquatic discharges are assumed to be negligible.

j) PVC equipment cleaning and degreasing of textiles; equal distribution between these uses is assumed. By analogy to trichloroethylene, 66% to air, 24% to land, and 10% to water.

k) Based on reaction yield of 99%, solubility of EDC in water and process water use of 20 kkg/kkg product. Air emissions are assumed to be controlled by use of vent condensors.

l) Assumed that all EDC is eventually released to the atmosphere following processing and cooking of the grain.

m) Assumed that 50% is sorbed onto soil and 50% is volatilized.

n) Assumed that quantities used do not warrant recovery.

o) U.S. Department of Commerce, 1980.

Table C-2. Production Capacity for 1,1,1-Trichloroethane

Facility	Location	Capacity ($x10^3$ kkg)[a]	Process
Dow Chemical Corporation	Freeport, TX	204	vinyl chloride
	Plaquemine, LA	136	vinyl chloride
PPG Industries, Inc.	Lake Charles, LA	159[b]	vinyl chloride
Vulcan Materials Co.	Geismer, LA	29[c]	ethane
		528	

Source: SRI, 1979b.

[a]1978 production: 290 x 10^3 kkg, 55% of capacity.

[b]Does not include 79 x 10^3 kkg/yr plant (vinylidene chloride) on standby.

[c]Ethane process.
Capacity reportedly increased to 86-91 x 10^3 kkg/yr in October, 1979 (Cogswell, 1979)

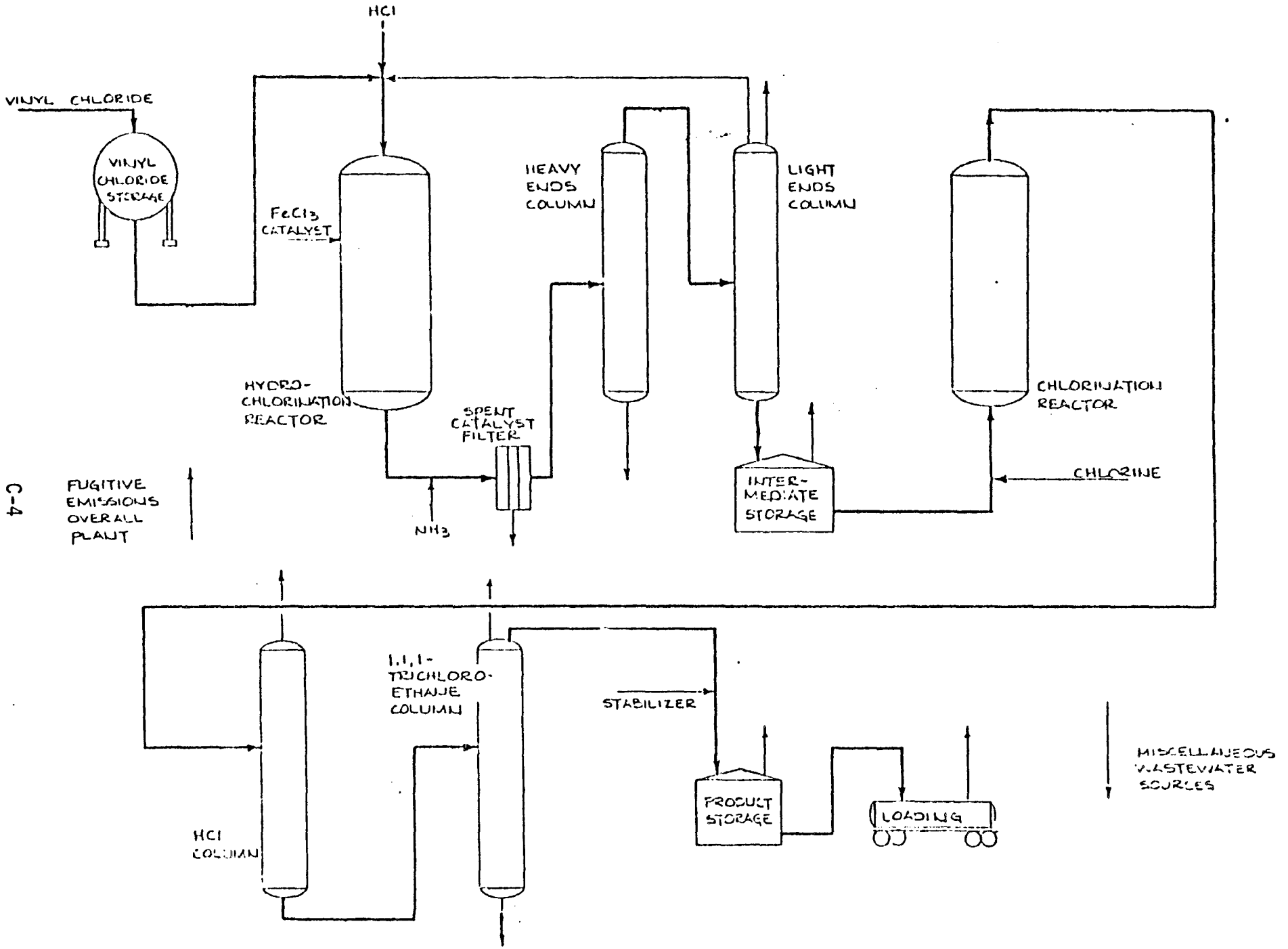

Figure C-1. Flow Diagram for 1,1,1-Trichloroethane from Vinyl Chloride (EPA, 1979b)

These estimates are derived from 1,2-dichloroethane emissions factors calculated by the manufacturers; it was further assumed that emissions were 98% controlled by combustion in an existing incinerator (EPA, 1979b). Approximately 640 kkg of 1,2-dichloroethane are estimated to be produced during 1,1,1-trichloroethane manufacture via the vinyl chloride process. Again, this estimate is based upon emission factors derived from process patents rather than actual sampling data. Thus, disposition of such wastes is uncertain but, based upon the process configuration shown in Figure C-1, are assumed to be recycled to tetrachloroethene/carbon tetrachloride manufacture. Thus, 1,2-dichloroethane discharges to land from 1,1,1-trichloroethane manufacture are assumed to be negligible.

Published estimates of aquatic discharges of 1,2-dichloroethane during production are unavailable but, based upon process chemistry are believed to be small (<1 kkg). 1,1,1-Trichloroethane streams are estimated to contain 1-10 ppm of EDC, based on estimated 1,2-dichloroethane concentration in feedstock streams (Denison, 1980). Thus, between 0.3 to 3 kkg may be released during use of 1,1,1-trichloroethane.

C.3 ETHYLENEAMINES

The production of ethyleneamines accounts for approximately 230×10^3 kkg (4%) of the annual EDC consumption (EPA, 1977). In 1978, 64×10^3 kkg of ethylenediamine (EDA) were produced at the facilities and locations listed in Table C-3 (SRI, 1979b). Ethylenediamine is typically produced in conjunction with additional polyamines such as diethylenetriamine, triethylenetetramine, tetraethylenepentamine, pentaethylene hexamine, and aminoethylpipera- zine. U.S. ethylenediamine capacity is estimated to be approximately 50% of total polyamine capacity. Ethyleneamines are used for a variety of purposes, including carbamate fungicides, chelating agents, wet-strength resins, and fuel/ lubricating oil additives.

Reaction of aqueous ammonia with 1,2-dichloroethane is the major commercial manufacturing route used in the U.S. for the entire family of polyamines, including ethylenediamine (EDA), and higher homologs, such as diethylenetriamine (DETA), pentaethylenehexamine (PEHA) and aminoethylpiperazine (AEP):

$$ClCH_2CH_2Cl + 2NH_3 \rightarrow NH_2CH_2CH_2NH_2 + 2HCl + \text{ other ethyleneamines}$$

A minor production variation uses anhydrous rather than aqueous ammonia; similar yields of polyamines are obtained. A simplified production scheme is shown in Figure C-2. The NH_3:1,2-dichloroethane ratio and reaction conditions control the distribution of amines produced: 15:1 mole ratio of NH_3 dichoroethane, temperature and pressure of 100°C and 4.82 MPa (47.6 atm) respectively results

Table C-3. Production Capacity for Ethylenediamine

FACILITY	CAPACITY, 10^3 kkg[a]	PRODUCTION, 10^3kkg[b]
Dow Chemical Corp.		
Freeport, TX	27	20
Union Carbide Corp.		
Taft, LA	32	24
Texas City, TX	27	20
TOTAL	86	64

Source: SRI,1979b.

[a] Capacities are for ethylenediamine; it is assumed that ethylenediamine production is ~50% of polyamine production(ethylenediamine, diethylenetriamine, triethylenetetraamine, tetraethylenepentamine, pentaethylenehexamine, and aminoethylpiperazine).

[b] Based on 74% capacity.

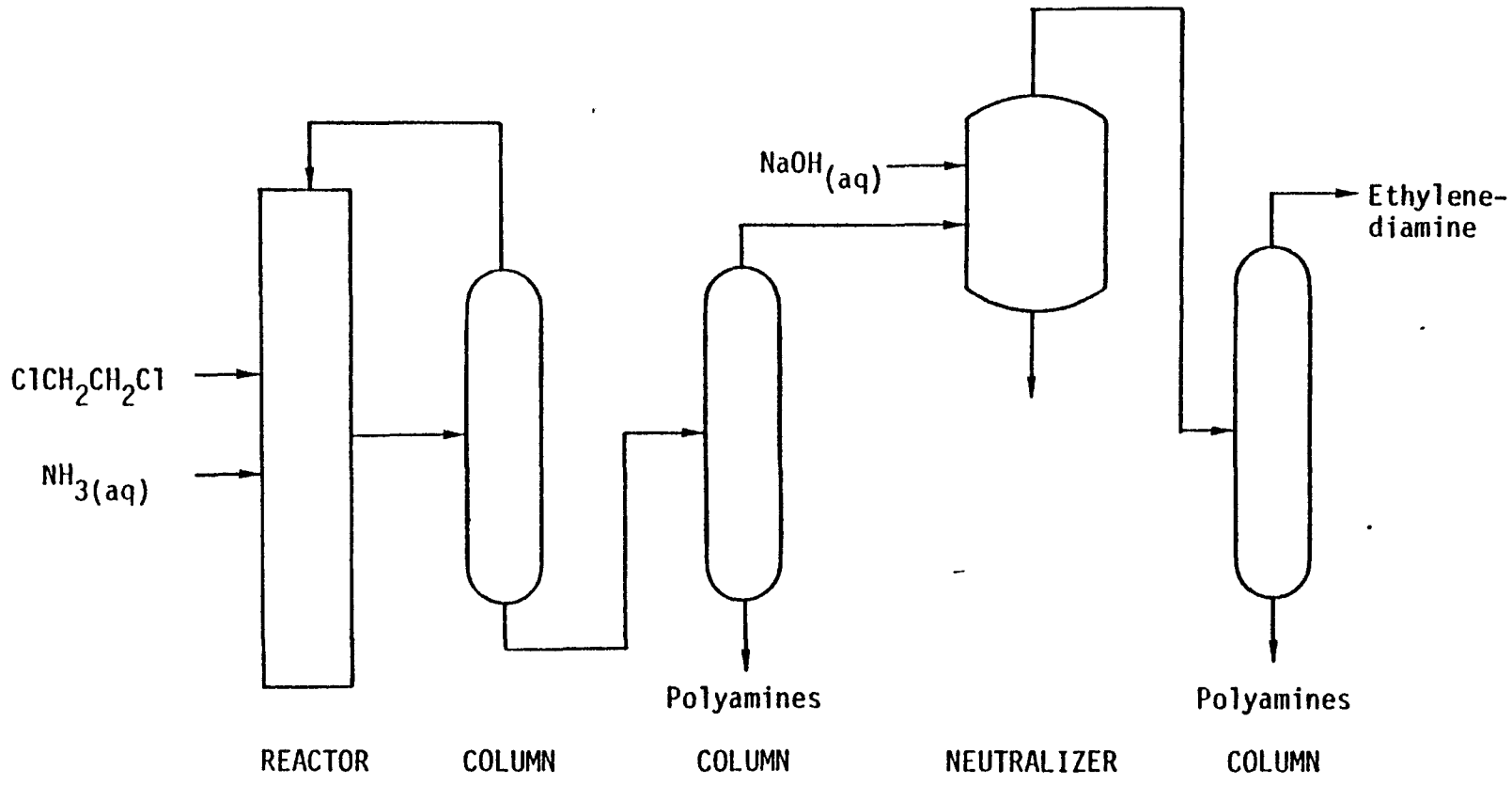

Figure C-2. Ethylenediamine Manufacture

in a product distribution of 45% EDA, 49% higher amines and 6% residue (Lichenwalter and Cour, 1969). At higher NH_3:EDC ratios, higher temperatures, and higher pressures, yields of ethylenediamine are increased to approximately 90% (Blears and Simpson, 1966). Vinyl chloride may form in significant amounts under these conditions; subsequent polymerization may cause equipment blockage and thus limit the utility of this process. The amines are produced as hydrochloride salts which are then neutralized with sodium hydroxide to yield the free amines. A portion of the amine product is lost when the salt is separated from the product amines, but losses are minimized by recrystallization of the processs salt and subsequent recovery of the amines (Steele, 1975).

Reactor pressure vents, dehydration columns and distillation columns, as well as wastewater streams from neutralization and drying operations, are probable sources of unreacted 1,2-dichloroethane discharges. Data concerning process discharges are unavailable however; accordingly, 1,2-dichloroethane emissions, based on analogy to the 1,2-dichloroethane manufacturing process, are estimated to be approximately 6 kg/kkg of product or 400 kkg annually. Also based on this analogy, 360 kkg (90%) are assumed to be emitted to the atmosphere, 20 kkg (5%) to be discharged to surface waters, and 20 kkg (5%) to be discharged as solid wastes. Estimating 1,2-dichloroethane concentrations in the ethylenediamine product stream to range from 1 ppm to 10 ppm, negligible amounts (0.07 to 0.70 kkg) of 1,2-dichloroethane are released annually from use of EDA.

C.4 TRICHLOROETHYLENE AND TETRACHLOROETHYLENE

Trichloroethylene is produced either separately or as a co-product with tetrachloroethylene by either chlorination or oxy-chlorination of 1,2-dichloroethane or other C_2 chlorinated hydrocarbons (including waste streams). All of the 135,000 kkg of trichloroethylene were produced in the United States in 1978 from 1,2-dichloroethane-based processes, accounting for approximately 2% of total 1,2-dichloroethane production (SRI, 1979a,b; see Table C-1). Prior to 1978, 8% of U.S. trichloroethylene production was via an acetylene-based process, since abandoned due to the increasing cost of the feedstock (SRI, 1979b). The principal uses of trichloroethylene include metal degreasing and use as a chain transfer agent in polyvinyl chloride production. Many minor solvent applications in food, textiles and medicine have been discontinued subsequent to findings by the National Cancer Institute which suggest that trichloroethylene may cause cancer in humans (NIOSH, 1975).

The major industrial use of tetrachloroethylene is in dry cleaning and textile processing; other uses include metal cleaning (degreasing) and as a chemical intermediate. Table C-4 lists producers, processes and capacities for tri- and tetrachloroethylene production.

Table C-4. Trichloroethylene and Tetrachloroethylene Production

Facility	Trichloroethylene Production		Tetrachloroethylene Production	
	Process	Capacity, 10 kkg	Process	Capacity, 10 kkg
Diamond Shamrock Corp Deer Park, TX	------	------	Direct Chlorination of 1,2-dichloroethane	75
Dow Chemical Corp Free Port, TX	Direct Chlorination of 1,2,-dichloroethane	68	Direct Chlorination of 1,2-dichloroethane	68
Pittsburg, CA	------	------	Chlorinolysis of hydro-carbon feedstocks	18
Plaquemine, LA	------	------	Chlorinolysis of hydro-carbon feedstocks	54
DuPont and Co., Inc. Corpus Christi, TX	------	------	Chlorinolysis of hyrdo-carbon stocks	73
Ethyl Corp. Baton Rouge, LA	Direct Chlorination of 1,2-dichloroethane	20	Direct Chlorination of 1,2-dichloreothane	23
PPG Industries, Inc. Lake Charles,	Oxy-chlorination of 1,2-dichloroethane	91	Oxy-chlorination of 1,2-dichloroethane	91
Stauffer Chemical Co. Louisville, KY	------	------	Chlorinolysis of heavy-ends	32
Vulcan Materials Co. Geismar, LA	------	------	Chlorinolysis of 1,2-dichloroethane and chlorinated	68
Wichita, KS	------	------	Chlorinolysis of 1,2-dichloroethane and chlorianted	23
TOTAL		179		525

Source: SRI, 1979b

Total production of tetrachloroethylene in 1978 was 330,000 kkg (USITC, 1979), approximately 49% of which was produced from 1,2-dichloroethane (SRI, 1979a). Assuming a reaction yield of 90% (SRI, 1979a), 108,000 kkg EDC (approximately 2% of EDC production) were consumed via tetrachloroethene production in 1978.

C.4.1 Direct Chlorination

The reaction for direct chlorination of 1,2-dichloroethane to tri-and tetrachloroethylene is:

$$2\ ClCH_2CH_2Cl + 5Cl \longrightarrow Cl_2C{=}CHCl + Cl_2C{=}CCl_2 + 7HCl$$

The chlorination is carried out at temperatures between 400 to 450°C, at approximately atmospheric pressure, and without the use of a catalyst. Other chlorinated C_2 hydrocarbons or recycled chlorinated hydrocarbon by-products may be used as feedstocks. By-product hydrogen chloride is typically used in other processes.

Figure C-3 represents a simplified process for manufacture of tri-and tetrachloroethylene via direct chlorination of 1,2-dichloroethane. 1,2-Dichloroethane and chlorine are first vaporized and fed to the reactor. Hydrogen chloride is separated from the reaction mixture and recovered as a by-product. The chlorinated hydrocarbon mixture is neutralized with a sodium hydroxide solution.

The crude product is dried and separated by distillation into two crude streams. Crude trichloroethylene is distilled and the light ends taken overhead. The bottom stream which contains trichloroethylene and heavy chlorinated hydrocarbons are distilled in the finishing column. Trichloroethylene is taken overhead and sent to storage; the heavy by-products are combined with the light ends from the trichloroethylene column and recycled. The crude tetrachloroethylene is separated in the tetrachloroethylene column; purified tetrachloroethylene goes overhead to storage and the bottoms go to the heavies column. The heavy by-products are fractionated and are recycled. The bottom product (largely tars) is incinerated.

C.4.2 Oxy-Chlorination

Tri- and tetrachloroethylene may also be produced by oxychlorination of 1,2-dichloroethane:

$$2ClCH_2CH_2Cl + 2O_2 \longrightarrow Cl_2C{=}CCl_2 + 4Cl_2C{=}CHCl + 8H_2O$$

The reaction is carried out at an approximate temperature and pressure of 425°C and one atmosphere respectively. Other chlorinated hydrocarbons may be used as feedstocks; indeed, most organic by-products may be recycled to the process. The process is relatively

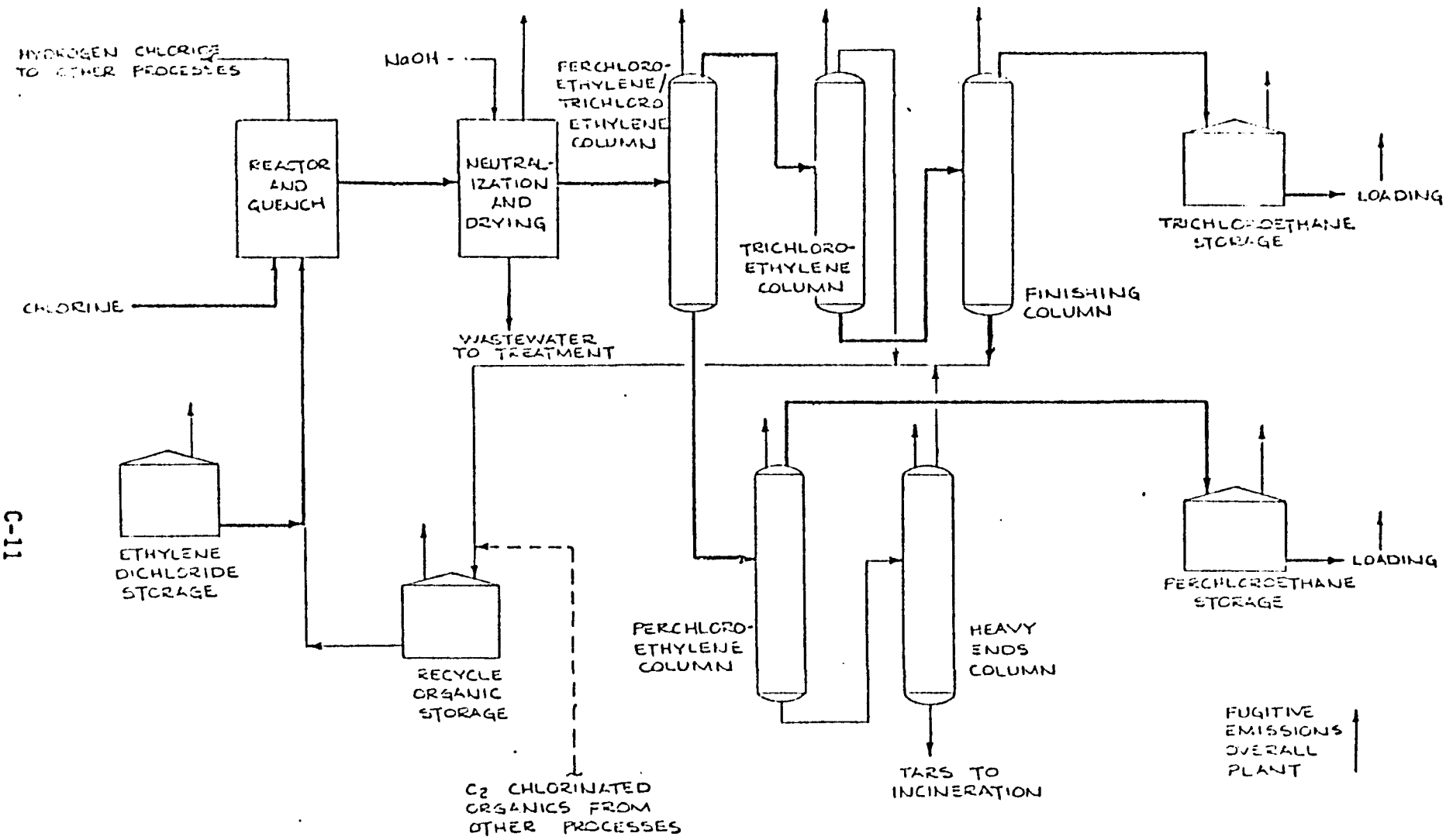

Figure C-3. Flow Diagram for Perchloroethylene and Trichloroethylene by Chlorination

flexible and production of either tri- or tetrachloroethylene may be increased at the expense of the other.

Figure C-4 represents a simplified process for tri- and tetrachloroethylene manufacture via oxy-chlorination of 1,2-dichloroethane. Hydrogen chloride, oxygen, and 1,2-dichloroethane are vaporized and fed to a fluidized bed reactor. The crude product is cooled, separated from by-product water and noncondensed phases (e.g., carbon dioxide, hydrogen chloride, nitrogen, and small amounts of chlorinated hydrocarbons) and are scrubbed with water to make by-product hydrochloric acid. The remaining inert gases are purged.

The crude product is dried by azeotropic distillation and separated into two product streams in the tetrachloroethylene/trichloroethylene column. Crude trichloroethylene is further fractionated. Low boiling impurities (light ends) are recycled to the reactor. Trichloroethylene is neutralized with ammonia, dried, and sent to storage. Crude tetrachloroethylene from the tetrachloroethylene column is also further fractionated. Tetrachloroethylene and low boiling by-products are taken overhead. High boiling impurities are fractionated into two streams: by-products suitable for recycle, and tars which are unsuitable for recycle. Crude tetrachloroethene (which contains low boiling impurities) is distilled once again. Low boiling impurities are recycled to the process. Tetrachloroethylene is then neutralized with ammonia, dried, and sent to storage.

C.4.3 Process Discharges

Few data are available regarding process discharges of 1,2-dichloroethane during trichloroethylene/tetrachloroethylene production. Major point sources of atmospheric emissions of 1,2-dichloroethane are the neutralization and drying vent and feedstock storage tanks. Assuming an emission factor of 3.1 kg of 1,2-dichloroethane/ kkg product and a control level of 85%, 138 kkg of 1,2-dichloroethane were emitted from neutralization and drying vents during trichloroethylene/ tetrachloroethylene production (EPA, 1979b). Feedstock storage emission data are unavailable. Trichloroethylene and tetrachloroethylene are produced in the same plant as 1,2-dichloroethane, however, and it is assumed that a portion of 1,2-dichloroethane product storage tanks may serve as feedstock storage tanks for tri- and tetrachloroethylene production. If separate tanks are in fact required for 1,2-dichloroethane feedstock storage, approximately 130 kkg would be emitted based on an emission factor of 0.6 kg/kkg product and 1978 consumption of 1,2-dichloroethane for trichloroethylene/tetrachloroethylene production. 1,2-Dichloroethane may also be emitted from reactor and distillation vents, but no specific data are available.

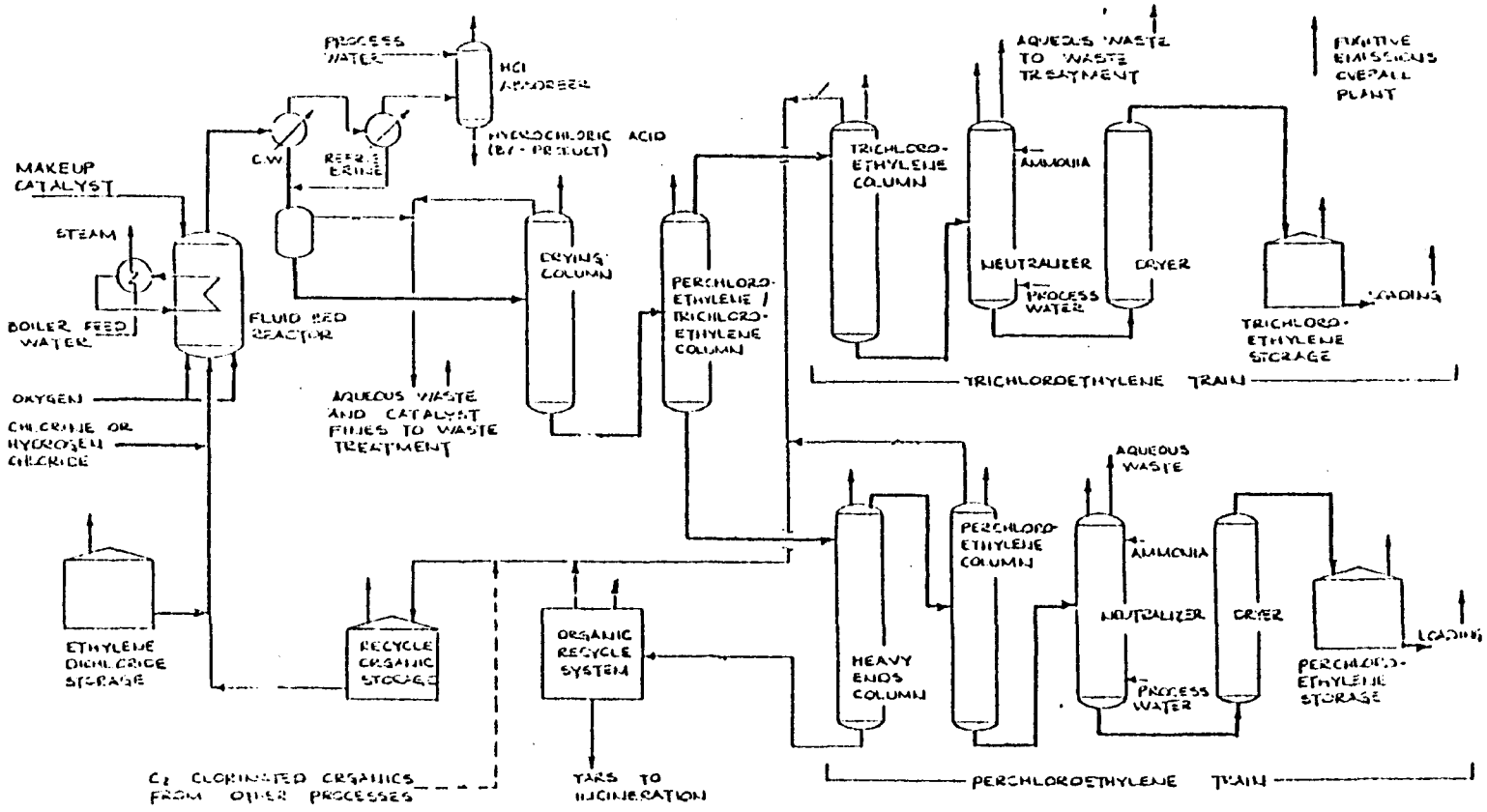

Figure C-4. Flow Diagram for Perchloroethylene and Trichloroethylene by Oxy-chlorination (EPA, 1979b)

Neutralization is the predominant method of treatment of trichloroethylene/tetrachloroethylene process wastes. Of the ton plants producing trichloroethylene/tetrachloroethylene, seven discharge to surface waters. Assuming total wastewater production of 0.42 kkg H_2O/kkg product, total trichloroethylene/tetrachloroethylene production via 1,2-dichloroethane processes of 300,000 kkg, and an average 1,2-dichloroethane concentration of 510 μg/l, approximately 64 kkg of 1,2-dichloroethane were discharged to surface waters (Catalytic, 1979). This value is calculated on the basis of raw waste load. Neither neutralization nor biological treatment are likely to degrade 1,2-dichloroethane. Aerated lagoons, of course, do lower aquatic discharges at the expense of air emissions. Data regarding solid waste releases are unavailable. Based on the physical properties of 1,2-dichloroethane and the fact that solid wastes are largely incinerated or recycled as chlorinolysis process feedstocks, emissions or discharges of 1,2-dichloroethane are presumed to be negligible.

Emissions of 1,2-dichloroethane from use of trichloroethylene and tetrachloroethylene are small. PPG Industries estimate 1,2-dichloroethane concentration in tetrachloroethylene to be <1 ppm (Denison, 1980). Taking this estimate as being valid for trichloroethylene and tetrachloroethylene, less than 0.3 kkg of 1,2-dichloroethane was emitted to the environment (primarily the atmosphere) from use of both products.

C.5 VINYLIDENE CHLORIDE

Vinylidene Chloride monomer (VDM), once used to produce 1,1,1-trichloroethane, is manufactured by dehydrochlorination of 1,1,2-trichloroethane, manufactured in turn by chlorination of vinyl chloride. Dehydrochlorination is carried out at a temperature of approximately 100°C; reaction yields are reported to range from 80 to 90%. A simplified flow diagrom of vinylidene chloride manufacture is shown in Figure C-5.

The major use today of vinylidene chloride is the manufacture of copolymers (e.g., Saran®). Vinylidene chloride has been produced by direct chlorination of ethane or ethylene as a coproduct of 1,2-dichloroethane (Neufield et al., 1977); however, Dow Chemical Co. and PPG Industries, Inc., the only U.S. producers, currently utilize the dehydrochlorination method (EPA, 1979). Table C-5 lists the locations and capacities of vinylidene chloride manufacturers; in 1978 production totaled 81,000 kkg (EPA, 1979b). Assuming a reaction yield of approximately 80% (EPA 1979), 102 x 10^3 kkg or 2% of the total 1,2-dichloroethane production was consumed in manufacture of vinylidene chloride.

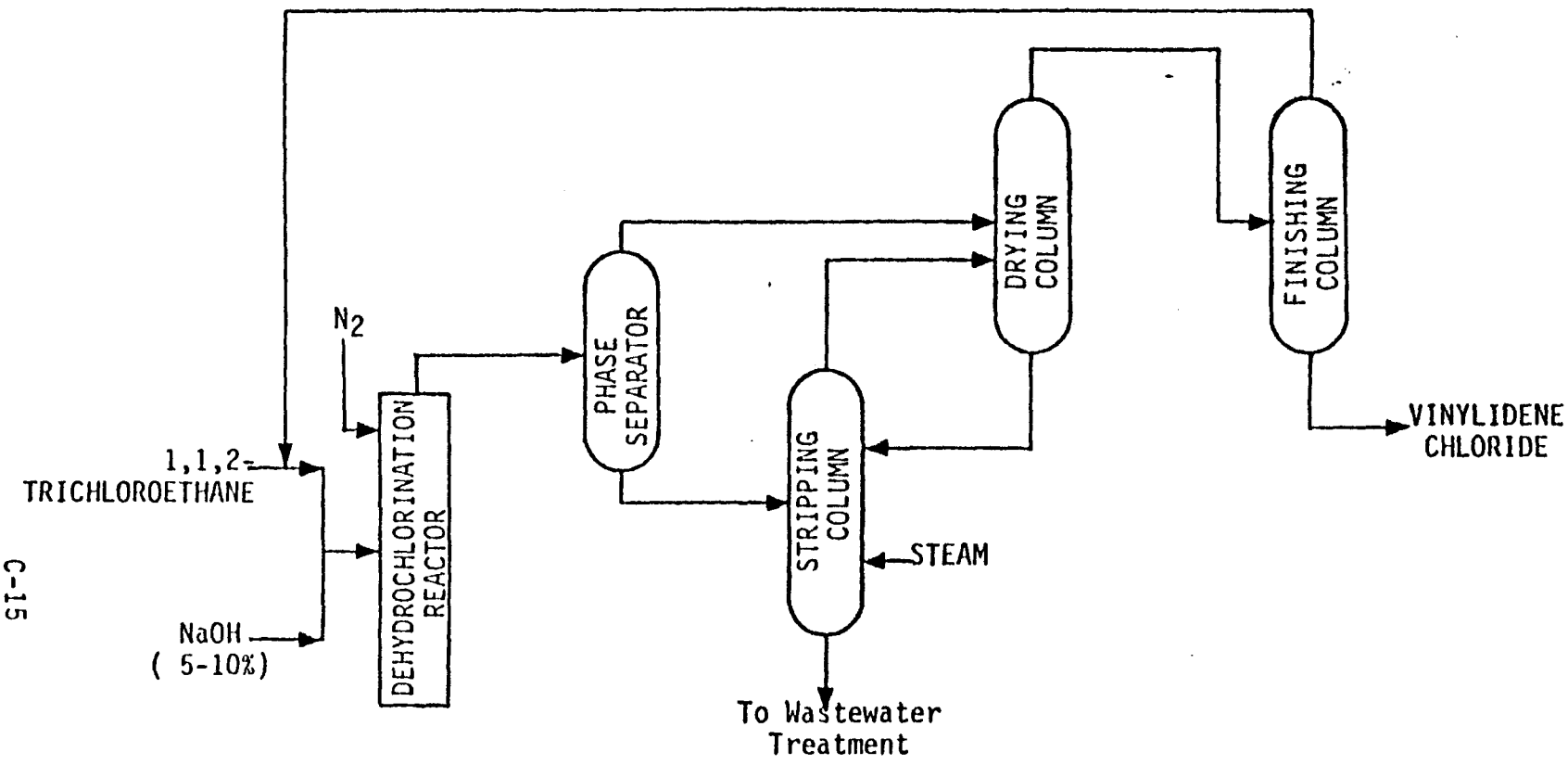

Figure C-5. Manufacture of Vinylidene Chloride from 1,1,2-Trichloroethane (EPA, 1979b)

Table C-5. Vinylidene Chloride Producers, Locations, and Capacity

Producer	Location	Estimated Capacity ($x10^3$ kkg)[a]
PPG Industries, Inc.	Lake Charles, LA	79
Dow Chemical Co.	Plaquemine, LA Freeport, TX	44
TOTAL		123

Source: EPA, 1979b

[a]1978 production: 81 x 10^3 kkg (EPA, 1979), 66% of capacity

Specific data concerning 1,2-dichloroethane loss from vinylidene chloride manufacture were not found; however, it is estimated that such discharges are negligible. The starting material for vinylidene chloride production, 1,1,2-trichloroethane (made from EDC), usually contains 0.1% EDC (Farber, 1980). EDC was reportedly not detected in distillation vent gas streams or in wastewater streams from vinylidene chloride manufacture (EPA, 1979; EPA, 1977).

Losses of 1,2-dichloroethane from use of vinylidene chloride appear to be minor. PPG Industries limits (as a product specification) 1,2-dichloroethane concentration to ~1 ppm in vinylidene chloride monomer (Denison, 1980). Assuming this specification to be representative of all manufacturers, and that all vinylidene chloride is produced from 1,2-dichloroethane (SRI, 1979a), 0.1 kkg 1,2-dichloroethane was available for release to the environment from vinylidene chloride use in 1978.

C.6 POLYSULFIDE RESINS

Polysulfide rubbers are produced as high performance polymers where solvent resistence is important. Manufactured at a single site by the Thiokol Corporation, Chemical Division (Moss Point, MS), only two polysulfide rubbers - Type A® and FA® - are based on 1,2-dichloroethane systems. Type A®, the first of the polysulfide rubbers to be produced, is based on the reaction product of 1,2-dichloroethane and sodium tetrasulfide:

$$ClCH_2CH_2Cl + Na_2S_4 \rightarrow \left[CH_2\ CH_2\ -S-S-S-S\right]_n + 2NaCl$$

Further research in polymeric polysulfide compositions resulted in an improved polymer, FA® based on use of dichlorodiethylformal and 1,2-dichloroethane:

$$ClCH_2CH_2Cl + CH_2(OCH_2CH_2Cl)_2 + 2Na_2S_4 \longrightarrow$$

$$\left[CH_2\ CH_2\ -S-S-CH_2CH_2OCH_2OCH_2CH\ -S-S\right]_n + 4NaCl$$

Solid polymers are manufactured in the aqueous phase in the form of small particles in the presence of wetting and dispersing agents. The dispersed product is washed free of soluble salts and coagulated with acid yielding high molecular weight elastomers.

Thiokol Type A® is used principally as a sulfur modifier. Sulfur, used as a mortar for acid pickling plants, water sewers, and oil pipes, is brittle and can crack upon impact or from thermal expansion/contraction. From 2% to 5% Thiokol Type A® dissolved in molten sulfur, prevents crystallization of sulfur at ambient temperatures [i.e., an amorphous state is maintained as opposed to the normal crystalline state, (Panek, 1973)].

A major use of polysulfide rubber FA® is in the manufacture of rollers employed for lacquering cans, roller and grain coating of paint on metal, and for the application of quick drying inks for printing. A second important application is in hose liners, again because of solvent resistance. Hoses lined with FA are widely used for paints, paint thinners, lacquers, and aromatic hydrocarbons. Putties formulated with FA polysulfide rubbers as base material find diverse sealing applications.

In 1978, approximately thirty-six metric tons of polysulfide rubber Type FA® were produced; two metric tons of Type A were produced (Shultheis, 1980). Based on reaction stoichiometry and assuming that 1,2-dichloroethane is the limiting reactant, 15 kkg of 1,2-dichloroethane were used in polysulfide rubber manufacture. Of these fifteen metric tons, 99 percent is assumed to incorporated into the product, and less than 1 kkg are discharged as process (largely aquatic) and fugitive emissions. Assuming process water use to be approximately 20 kkg/kkg product and a 1,2-dichloroethane concentration of 9000 ppm (the solubility limit), 0.7 kkg of 1,2-dichloroethane is contained in process wastewaters. Air emissions are assumed to be controlled by use of vent condensers;using an using an emission factor of 10 kg/kkg, 0.02 kkg of 1,2-dichloroethane are emitted to the atmosphere annually.

C.7 LEAD SCAVENGERS

1,2-Dichloroethane, together with ethylene dibromide (EDB) is added to the tetraethyllead/tetramethyllead (TEL/TML) antiknock mixtures to scavenge lead compounds (e.g., PbO) which are formed and deposited on engine components during combustion. Lead oxides are removed (on the deposit surface, rather than in the gas phase) by reaction of hydrogen chloride and bromide formed during combustion of 1,2-dichloroethane and 1,2-dibromoethane as shown below. The lead halides so formed are volatile and are emitted to the atmosphere in the automotive exhaust.

$$PbO + 2HBr \longrightarrow PbBr_2 + H_2O$$
$$PbO + 2HCl \longrightarrow PbCl_2 + H_2O$$
$$PbO + HBr + HCl \longrightarrow PbBrCl + H_2O$$
$$PbBr_2 + nPbO \longrightarrow PbBr_2\ nPbO$$
$$PbCl_2 + nPbO \longrightarrow PbCl_2\ nPbO$$

A typical "Motor Mix" contains 1 mole of 1,2-dichloroethane and 0.5 mole of 1,2-dibromoethane per mole of lead. Use of lead scavengers has steadily declined since 1973 as a result of decreased leaded gasoline consumption. In 1978, 72,000 kkg of 1,2-dichloroethane were used as lead scavengers; 1970 usage totalled 103,000 kkg (Jacobs, 1979). This trend will continue as new cars requiring unleaded gas replace older vehicles using leaded fuel. The market for leaded gas

for passenger cars, 2.8×10^{11} l in 1978 (Monthly Energy Review 1980), has been forecast to disappear about 1990, although some trucks will require leaded gas beyond this date.

Of the 72,000 kkg of 1,2-dichloroethane used as lead scavenger in 1978, approximately 700 kkg were emitted to the atmosphere from blending of gasoline, fueling of cars, evaporation from storage tanks, and filling of storage tanks. Estimated emissions from these sources are summarized in Table C-6.

Atmospheric emissions of 1,2-dichloroethane are assumed to occur both prior to and after combustion of gasoline. Though 1,2-dichloroethane was not detected (analytical) detection limit: 150 ppb) in a sampling of automotive exhaust from two vehicles operating on leaded gasoline containing 0.95 g 1,2-dichloroethane per gallon of gas (Jacobs, 1980), the detection limit corresponds to a combustion efficiency of only 97-98%. If on the other hand, combustion of 1,2-dichloroethane is comparable to that of ethylene dibromide (from 5 to 20 ppb of EDB were detected in the same analysis), decomposition of 1,2-dichloroethane may be as great as 99.3 to 99.8% of the amount originally present. Using the latter data, 1,2-dichloroethane emissions would range from 140 kkg to 500 kkg. Assuming a conservative combustion efficiency of 99.3%, approximately 500 kkg of 1,2-dichloroethane were emitted in automotive exhaust.

Blending of gasoline additives is usually a closed system operation involving little personnel contact. 1,2-Dichloroethane concentration in a gasoline blending plant ranged from 0.003-0.18 ppm as a 8-hour time-weighted average. Estimated emission of EDC from blending of gasoline totaled 35 kkg, based on an assumed emission factor of 0.5 kg/kkg EDC in gasoline blended.

An estimated 120 kkg of 1,2-dichloroethane were emitted to the atmsophere in 1978 by refueling of automobiles, assuming no emission control on gasoline pump nozzles. Total volatile organic emissions could be reduced by as much as 95% if control mechanisms such as hooded nozzles and pressurized pump delivery systems were utilized (Simeroth, 1980).

Emissions of 1,2-dichloroethane from filling of storage tanks and evaporation from storage tanks are atmospheric; an estimated 40 kkg of 1,2-dichloroethane were lost via these pathways in 1978. This estimate includes both underground and above ground storage and filling discharges with no emission control equipment.

C.8 MINOR USES

Minor uses of 1,2-dichloroethane, though comprising only a small percentage of total output - 0.1% - totalled approximately 5000 kkg in 1978. These uses include: production of paints, coatings and

Table C-6. EDC Emissions from Use as Lead Scavenger 1978

Source	Estimated Atmospheric EDC Emissions (kkg)
Blending of gasoline	35[a]
Refueling of automobiles	120[b]
Filling of gasoline storage tanks Evaporation from gasoline storage tanks	40[c]
Combustion of gasoline	500[d]

Source: Acurex estimates.

[a]Loss of 0.05% from blending operations is assumed. 72,000 kkg EDC used in gasoline.

[b]4.5 g hydrocarbons emitted/gal gas dispersed (simmeroth, 1980). Assume that EDC emissions are proportional to hydrocarbon (0.16% by weight). Gasoline has a specific gravity of 0.73 (Jacobs, 1980).

[c]Assume above ground storage and filling loss 14 kg gasoline/3785 l gasoline (Simeroth, 1980), 5700 facilities, 15,000 l/day throughput (EPA, 1977). EDC emissions proportional to gasoline loss (0.95 g EDC/gas. gas).

[d]A combustion efficiency of 99.3% is assumed.

adhesives; extraction solvent; cleaning solvent; grain fumigant; diluent for pesticides/herbicides; and as a specialty solvent used during manufacture of color film. The primary source of information covering minor applications is a 1978 EPA report (EPA, 1978a). These data were based on a review of the literature and information acquired from direct contacts with 1,2-dichloroethane manufacturers such as Dow Chemical Corp.; PPG Industries, Inc.; Ethyl Corp.; Diamond Shamrock Corp., etc. (Sittenfield, 1980; EPA, 1978a). Minor uses of 1,2-dichloroethane are delineated in Table C-7.

C.8.1 Paints, Coatings and Adhesives

Approximately 1,300 kkg of 1,2-dichloroethane are reported to be used in paints, coatings and adhesives, accounting for about 25% of all minor uses (EPA, 1978a; SRI, 1979a). Experts within the paint industry, however, were unable to provide names of specific formulations containing 1,2-dichloroethane but indicated that 1,2-dichloroethane is a low volume specialty solvent used principally in fast drying paints. Possible applications include traffic paints, printing ink and swimming pool resistant coatings (Palmer, 1980). The solvent, which dissolves the binder and thins the product to brushing, rolling or spraying consistency, is lost by evaporation and does not remain in the cured film, (Drisko, 1980). 1,2-Dichloroethane either alone or with methylene chloride or acrylic polymers, finds some use (particularly in the auto industry) as a solvent cement for thermoplastic materials, e.g., polymethyl methacrylate or polycarbonate (Shields, 1976). In addition, 1,2-dichloroethane in combination with phenolic compounds is reported to be an effective solvent for epoxy resins (Vazirani, 1980).

Emissions from this category occur both in formulation of the components and as a normal consequence of use. It is assumed that all of the 1,2-dichloroethane used, 1,300 kkg, is eventually volatilized.

C.8.2 Extraction Solvents

The amount of 1,2-dichloroethane consumed for use as an extraction solvent is reported to be from 1,000-1,250 kkg (20%-25% of the minor uses) in 1978 (EPA, 1978a; SRI, 1979a). This includes extraction of oils from oil-bearing seeds, oleoresins from spices, vitamins from fishliver oils, nicotine from tobacco, as well as applications in processing of animal fats and pharmaceuticals. Industry experts, though indicating that 1,2-dichloroethane is a common extraction solvent within these industries, were unable to provide specific consumption data (Burns, 1980); one spice extraction company contacted indicated recent discontinuance of 1,2-dichloroethane solvent usage (Bower, 1980).

Table C-7. Minor Uses of 1,2-Dichloroethane[a]

Use Area	Consumption	Environmental Releases		
		Air	Land	Water
Paints, Coatings and Adhesives	1300	1300	neg	neg
Extraction Solvent	1300	1300	neg	neg
Oils from oil seeds Processing animal fats Pharmaceutical industry				
Cleaning Solvent	1000	660	240	100
PVC reactors Textile cleaning				
Grain Fumigant	500	500	neg	neg
Polysulfide Manufacture	15	neg	neg	neg
Miscellaneous	500			
Film manufacture	150	8	neg	neg
Diluent for pesticides	350	175	175	neg
TOTAL	5000			

Source: EPA, 1978a; Sittenfield, 1980.

a) Values do not add due to rounding

Two types of products appear to be extracted with 1,2-dichloroethane -- spice oleoresins and oilseed cake. Oleoresins offer a superior product in terms of product uniformity and potency (5 to 20 times more potent) than the corresponding crude spices from which they are derived and are commonly shipped in bulk to specific customers. Certain spices (e.g., paprika, tumeric) moreover, are extracted not for their flavor but for their color. Oleoresins are extracted by percolating a volatile solvent, for example dichloromethane or 1,2-dichloroethane, through a ground spice; the solvent is removed by distillation and recovered for reuse, leaving the oleoresin. The extracted spice residue may be used as an animal feed supplement. Only three companies in the United States are known to produce oleoresins in 1980; apparently none use 1,2-dichloroethane as a solvent. Oleoresin production data are unavailable at this time; an unknown but substantial portion of oleoresins however, are, imported.

Vegetable oils are produced by crushing oil-bearing seeds and recovering the resulting oil. The crushed seeds however, contain substantial amounts of oil which is recovered by solvent (largely hexane) extraction. As with oleoresin production, solvents are removed by distillation and recovered for reuse. The extracted seed cake is used as an animal feed supplement.

In 1961, permissible residues of 1,2-dichloroethane in spice oleoresins intended for human consumption were limited to 30 ppm or less by the Federal Food, Drug and Cosmetic Act (26 FR 2403, 1961). Residues of 1,2-dichloroethane ranging from 3 ppm to 23 ppm have been detected in a variety of spice oleoresins [(e.g., black pepper, cinnamon, ginger and paprika, (Page and Kennedy, 1975; see Table C-8)]. The annual U.S. production of spices is approximately 2.2 x 10^5 kkg (Census Bureau, 1979); if all spices were extracted, 1 to 5 kkg of 1,2-dichloroethane might be contained in these products. In 1967, also under the same Act, the concentration of 1,2-dichloroethane animal feeds was limited to 300 ppm (32 FR2942, 1967). It is assumed that oilseed-meals is the principal feed component which could be extracted with 1,2-dichloroethane. Approximately 20 x 10^6 kkg of oilseed-meals were used as animal feeds in 1978 (US Department of Agriculture, 1980). No data are available as to the percentage of products extracted with 1,2-dichloroethane but, based upon limited discussions with industry and government experts, usage is uncommon.

Ninety-five to 99% of 1,2-dichloroethane used is recovered by use of vent condensors and carbon recovery systems; <5 ppm is estimated to be present in vent gas, effluents (see Table C-9) or residues (Lo, 1980; Page and Kennedy,1975). Thus, consumption of 1,000 to 1,250 kkg of 1,2-dichloroethane listed for this category may represent in fact, process loss, assuming zero market growth. This in turn, implies a total 1,2-dichloroethane solvent inventory (assuming

Table C-8. 1,2-Dichloroethane Residues, μg/g Found in Spice Oleoresins from Three Manufacturers

Spice Oleoresin	1,2-DICHLOROETHANE CONCENTRATION, μg/g Manufacture		
	A	B	C
Black Pepper		9	12
Celery		2	3
Cinnamon		3	
Clove		23	
Mace		4	
Marjoram		6	
Paprika	3	9	
Rosemary		3	
Sage		6	
Thyme		13	
Turmeric		6	2

Source: Page and Kennedy, 1975.

Table C-9. Wastewater Loading of Dichloroethanes in the Pharmaceutical Industry

Plant #	Flow (10^6 l/day)	Concentrations (μg/l) 1,1-Dichloroethane Influent	1,1-Dichloroethane Effluent	1,2-Dichloroethane Influent	1,2-Dichloroethane Effluent	Effluent Loading (kg/yr)[a] 1,1-Dichloroethane	1,2-Dichloroethane
12015	0.30	-	-	19	-		
12022	4.9	-	-	11,000	500		600
12028	0.30	-	-	17	-		
12036	4.6	-	-	-	-		
12038	3.8	-	-	3,000	65		67
12058	27.5	-	-	10-30/3,500-14,00	22-44		160-330
12044	0.49	-	-	-	-		
12066	0.99	-	<10	<10	<10	<2.7	<2.7
12097	0.38	-	-	-	-		
12108	0.53	-	<10	-	-	<1.4	
12119	0.19	-	-	-	-		
12132	3.8	5	-	12	-		
12161	3.8	-	-	-	-		
12204	0.76	-	-	28	-		
12210	0.038	-	-	-	-		
12231	1.9	-	-	-	-		
12236	3.2	-	-	68-560	69-560		50-260
12256	110	-	-	-	-		
12257	1.9	-	<10	<10	<10	<5.1	<5.1
12311	0.61	-	-	15	-		
12342	4.0	N/A[b]	1	N/A	-		
12411	1.3	-	-	-	-	1.1	
12420	0.64	-	-	-	-		
12439	0.038	-	-	-	-		
12447	5.7	54	-	14,000	-		
12462	1.1	-	-	-	-		
12999	1.7	-	-	UNK[c]	20		9.2
Total						<10	920-1300

Source: EPA, Effluent Guidelines Division, 1980.

a) Based on a 270 day operating year
b) Not applicable, i.e., no waste treatment plant
c) Unknown

97% solvent recovery) of approximately 40,000 kkg, a value not inconsistent with spice production and oil extraction.

C.8.3 Cleaning Solvents

Approximately 1,000 kkg of 1,2-dichloroethane is used as cleaning solvents, primarily to clean polyvinyl chloride production equipment and as a degreaser/spotting agent in the textile manufacturing industry (EPA 1978a; SRI, 1979b). The quantities consumed in each use are unavailable however, usage therefore has assumed to be apportioned equally between these uses.

Use within the textile industry is reported to be within a closed system and only small amounts are discharged on a continuous basis. The disposition of spent solvents is unknown, but solvents are presumed to be recovered. It is arbitrarily assumed that all 1,2-dichloroethane used for cleaning purposes is eventually emitted to the atmosphere since PVC reactor cleaning wastes are presumed to be drummed prior to disposal. These wastes are presumed to be landfilled or ocean dumped rather than incinerated.

C.8.4 Grain Fumigants

Approximately 500 kkg of 1,2-dichloroethane were used for grain fumigation in 1978 (EPA, 1978a; SRI, 1979a). Grain fumigation in general is expected to increase due to the recent Soviet grain embargo, resulting in storage of an additional 20 million bushels of grain (Fowler, 1980). Fumigants are defined as gaseous pesticides. They must remain in the gas or vapor state and in sufficient concentration to be lethal to the target pest species. In the case of 1,2-dichloroethane, toxic vapors are generated from a liquid and usually used as part of multi-component fumigant mixtures for the control of insect and fungal infestations in stored grain (see Table C-10). The sorption and persistance of 1,2-dichloroethane depends on the grain type, exposure conditions and degree of subsequent ventilation. It is assumed that all fumigant vapors not retained by the grain are lost to the atmosphere. Although some investigators have reported high (up to 84%) retention of EDC residues in fumigated grains (Berck, 1965; Wit et al., 1969, as cited in Fishbein, 1980) most feel that subsequent to processing, preparation and cooking, negligible levels of 1,2-dichloroethane remain in the final product. Thus, 99.9+% of the 1,2-dichloroethane used for grain fumigation, or 500 kkg, should ultimately be discharged to the atmosphere. However, animals which consume grain directly, such as chickens and cattle,

Table C-10. Pesticide Products Containing 1,2-Dichloroethane[a]

Pesticide product name	Active ingredients		Product toxicity rating[b]
	Component	Concentration (%)	
Products containing one active ingredient			
Destruxol Borer-Sol	1,2-Dichloroethane	50.0	3
Ferti-Lome Tree Borer Killer	1,2-Dichloroethane	50.0	3
Hacienda Borer Solution	1,2-Dichloroethane	50.0	3
Navlet's Borer Solution	1,2-Dichloroethane	50.0	3
Staffel's Boraway	1,2-Dichloroethane	50.0	3
Products containing two active ingredients			
Best 4 Servis Brand 75-25 Standard Fumigant	1,2-Dichloroethane Carbon tetrachloride	70.3 29.7	3
Big F "LGF" Liquid Gas Fumigant	1,2-Dichloroethane Carbon tetrachloride	75.0 25.0	1
Brayton Flour Equipment Fumigant for Bakeries	1,2-Dichloroethane Carbon tetrachloride	70.2 29.8	1
Brayton 75-25 Grain Fumigant	1,2-Dichloroethane Carbon tetrachloride	70.2 29.8	1
Bug Devil Fumigant	1,2-Dichloroethane Carbon tetrachloride	70.3 29.7	2
Cardinalfume	1,2-Dichloroethane Carbon tetrachloride	70.2 29.8	1
Chemform Brand Bore-Kill	1,2-Dichloroethane Propylene dichloride	35.0 15.0	2
Cooke Kill-Bore	1,2-Dichloroethane Lindane	50.0 1.0	2
De-Pester Fumigant No. 1	1,2-Dichloroethane Carbon tetrachloride	70.2 29.8	1
Diamond 75-25 Grain Fumigant	1,2-Dichloroethane Carbon tetrachloride	70.2 29.8	2
Diweevil	1,2-Dichloroethane Carbon tetrachloride	70.0 30.0	1
Dowfume 75	1,2-Dichloroethane Carbon tetrachloride	70.0 30.0	1
Excelcide Excelfume	1,2-Dichloroethane Carbon tetrachloride	70.0 30.0	1
Fume-O-Death Gas No. 3	1,2-Dichloroethane Carbon tetrachloride	70.0 30.0	2
Fumisol	1,2-Dichloroethane Carbon tetrachloride	70.3 29.7	1
Gas-O-Cide	1,2-Dichloroethane Carbon tetrachloride	70.3 29.7	1

Table C-10. (Continued)

Pesticide product name	Active ingredients		Product toxicity rating[b]
	Component	Concentration (%)	
Grain Fumigant	1,2-Dichloroethane	75.0	1
	Carbon tetrachloride	25.0	
Hill's Hilcofume 75	1,2-Dichloroethane	70.2	2
	Carbon tetrachloride	29.8	
Hydrochlor Fumigant	1,2-Dichloroethane	70.0	1
	Carbon tetrachloride	30.0	
Hydrochlor GF Liquid Gas Fumigant	1,2-Dichloroethane	75.0	1
	Carbon tetrachloride	25.0	
Infuco Fumigant 75	1,2-Dichloroethane	70.0	1
	Carbon tetrachloride	30.0	
J-Fume 75	1,2-Dichloroethane	70.0	1
	Carbon tetrachloride	30.0	
Koppersol	1,2-Dichloroethane	3.0	3
	Copper oleate	11.0	
Maxkill 75-25	1,2-Dichloroethane	70.2	1
	Carbon tetrachloride	29.8	
Pearson's Fumigrain P-75	1,2-Dichloroethane	67.5	1
	Carbon tetrachloride	32.5	
Riverdale Fumigant	1,2-Dichloroethane	70.3	2
	Carbon tetrachloride	29.7	
Selig's Selcofume	1,2-Dichloroethane	25.0	1
	Carbon tetrachloride	75.0	
Spray-Trol Brand Insecticide Fumi-Trol	1,2-Dichloroethane	70.2	1
	Carbon tetrachloride	29.8	
Standard 75-25 Fumigant	1,2-Dichloroethane	70.3	2
	Carbon tetrachloride	29.7	
Stephenson Chemicals Stored Grain Fumigant	1,2-Dichloroethane	70.2	1
	Carbon tetrachloride	29.8	
Vulcan Formula 72 Grain Fumigant	1,2-Dichloroethane	70.2	2
	Carbon tetrachloride	29.8	
Westofume Fumigant	1,2-Dichloroethane	70.2	1
	Carbon tetrachloride	29.8	
Zep-O-Fume Grain Mill Fumigant	1,2-Dichloroethane	70.2	1
	Carbon tetrachloride	29.8	
Products containing three active ingredients			
Brayton EB-5 Grain Fumigant	1,2-Dichloroethane	29.2	1
	Carbon tetrachloride	63.6	
	1,2-Dibromoethane	7.2	
Crest 15 Grain Fumigant	1,2-Dichloroethane	19.6	2
	Carbon tetrachloride	57.0	
	1,2-Dibromoethane	20.4	

Table C-10. (Continued)

Pesticide product name	Active ingredient		Product toxicity rating[b]
	Component	Concentration (%)	
De-Pester Weevil Kill	1,2-Dichloroethane	29.2	1
	Carbon tetrachloride	63.6	
	1,2-Dibromoethane	7.2	
Dowfume EB-5 Effective Grain Fumigant	1,2-Dichloroethane	20.0	1
	Carbon tetrachloride	64.0	
	1,2-Dibromoethane	7.0	
Dowfume EB-15 Inhibited	1,2-Dichloroethane	20.0	1
	Carbon tetrachloride	57.0	
	1,2-Dibromoethane	20.0	
Dowfume EB-59	1,2-Dichloroethane	9.0	2
	Carbon tetrachloride	32.0	
	1,2-Dibromoethane	59.0	
Farmrite Mushroom Spray	1,2-Dichloroethane	75.0	2
	Malathion	22.5	
	Petroleum distillate	2.5	
FC-7 Grain Fumigant	1,2-Dichloroethane	64.7	2
	Carbon tetrachloride	27.4	
	1,2-Dibromoethane	7.9	
(FC-13) Mill Machinery Fumigant	1,2-Dichloroethane	19.6	2
	Carbon tetrachloride	59.9	
	1,2-Dibromoethane	20.5	
FC-13 Mill Machinery Fumigant	1,2-Dichloroethane	19.6	1
	Carbon tetrachloride	59.9	
	1,2-Dibromoethane	20.5	
Formula 635 (FC-2) Grain Fumigant	1,2-Dichloroethane	29.2	1
	Carbon tetrachloride	63.6	
	1,2-Dibromoethane	7.2	
Grainfume MB	1,2-Dichloroethane	29.2	2
	Carbon tetrachloride	63.6	
	1,2-Dibromoethane	7.2	
Infuco 50-50 Spot Fumigant	1,2-Dichloroethane	26.84	1
	Carbon tetrachloride	11.40	
	1,2-Dibromoethane	61.76	
J-Fume-20	1,2-Dichloroethane	20.0	1
	Carbon tetrachloride	57.0	
	1,2-Dibromoethane	20.0	
Leittle Spotfume 60	1,2-Dichloroethane	8.5	2
	Carbon tetrachloride	31.5	
	1,2-Dibromoethane	60.0	
Max Spot Kill Machinery Fumigant	1,2-Dichloroethane	20.0	2
	Carbon tetrachloride	57.0	
	1,2-Dibromoethane	20.0	
Okay Mole and Gopher Fumigant	1,2-Dichloroethane	30.0	3
	Carbon tetrachloride	50.0	
	Paradichlorobenzene.	20.0	

Table C-10. (Continued)

Pesticide product name	Active ingredient		Product toxicity rating[b]
	Component	Concentration (%)	
Parson Lethogas Fumigant	1,2-Dichloroethane	73.5	1
	Carbon tetrachloride	24.5	
	1,2-Dibromoethane	2.0	
Solig's Grain Fumigant No. 15	1,2-Dichloroethane	19.6	2
	Carbon tetrachloride	57.0	
	1,2-Dibromoethane	20.4	
Spot Fumigant	1,2-Dichloroethane	19.6	1
	Carbon tetrachloride	59.9	
	1,2-Dibromoethane	20.5	
T-H Vault Fumigant	1,2-Dichloroethane	29.2	2
	Carbon tetrachloride	63.6	
	1,2-Dibromoethane	7.2	
Tri-X Garment Fumigant	1,2-Dichloroethane	30.0	1
	Carbon tetrachloride	65.0	
	1,2-Dibromoethane	5.0	
Vulcan Formula 635 (FC-2) Grain Fumigant	1,2-Dichloroethane	29.2	2
	Carbon tetrachloride	63.6	
	1,2-Dibromoethane	7.2	
Waco-50	1,2-Dichloroethane	9.0	1
	Carbon tetrachloride	32.0	
	1,2-Dibromoethane	59.0	
Products containing four active ingredients			
Agway Serafume	1,2-Dichloroethane	10.0	1
	Carbon disulfide	10.0	
	Carbon tetrachloride	76.5	
	1,2-Dibromoethane	3.5	
Coop New Activate Weevil Killer Fumigant	1,2-Dichloroethane	66.0	1
	Carbon tetrachloride	27.0	
	1,2-Dibromoethane	5.0	
	Sulfur dioxide	2.0	
De-Pester Grain Conditioner and Weevil Killer	1,2-Dichloroethane	64.6	1
	Carbon tetrachloride	27.4	
	1,2-Dibromoethane	5.0	
	Sulfur dioxide	3.0	
Dowfume F	1,2-Dichloroethane	65.0	1
	Carbon tetrachloride	27.0	
	1,2-Dibromoethane	5.0	
	Sulfur dioxide	3.0	
Dyna Fume	1,2-Dichloroethane	12.0	1
	Carbon tetrachloride	83.8	
	1,2-Dibromoethane	1.2	
	Sulfur dioxide	3.0	
(FC-4) SX Grain Storage Fumigant	1,2-Dichloroethane	64.6	2
	Carbon tetrachloride	27.4	
	1,2-Dibromoethane	5.0	
	Sulfur dioxide	3.0	

Table C-10. (Continued)

Pesticide product name	Active ingredients		Product toxicity rating[b]
	Component	Concentration (%)	
Formula MU-39[c]	1,2-Dichloroethane	10.00	2
	Malathion	23.75	
	Petroleum distillate	50.00	
	Xylene	15.00	
Iso-Fume	1,2-Dichloroethane	11.4	1
	Carbon tetrachloride	80.6	
	1,2-Dibromoethane	5.0	
	Sulfur dioxide	3.0	
Max Kill Spot-59 Fumigant for Mills and Milling Machinery	1,2-Dichloroethane	10.0	1
	Carbon disulfide	1.5	
	Carbon tetrachloride	29.5	
	1,2-Dibromoethane	59.0	
Patterson's Weevil Killer	1,2-Dichloroethane	63.1	2
	Carbon tetrachloride	26.9	
	1,2-Dibromoethane	7.1	
	Sulfur dioxide	2.9	
Pioneer Brand Grain Fumigant	1,2-Dichloroethane	66.0	1
	Carbon tetrachloride	27.0	
	1,2-Dibromoethane	5.0	
	Sulfur dioxide	2.0	
Selig's Grain Storage Fumigant	1,2-Dichloroethane	64.6	2
	Carbon tetrachloride	27.4	
	1,2-Dibromoethane	5.0	
	Sulfur dioxide	3.0	
Serfume	1,2-Dichloroethane	10.0	1
	Carbon disulfide	10.0	
	Carbon tetrachloride	76.5	
	1,2-Dibromoethane	3.5	
Sure Death Brand Millfume No. 2	1,2-Dichloroethane	64.6	2
	Carbon tetrachloride	27.4	
	1,2-Dibromoethane	5.0	
	Sulfur dioxide	3.0	
T&C Fruit and Vegetable Insecticide and Miticide[d]	1,2-Dichloroethane	28.0	2
	Aromatic petroleum derivative solvent	28.0	
	Methyl azinphos	5.0	
	Petroleum distillate	28.0	
T-H Grain Fumigant No. 7 Weevil Killer and Grain Conditioner	1,2-Dichloroethane	63.1	1
	Carbon tetrachloride	26.9	
	1,2-Dibromoethane	7.1	
	Sulfur dioxide	2.9	
914 Weevil Killer and Grain Conditioner	1,2-Dichloroethane	63.1	1
	Carbon tetrachloride	26.9	
	1,2-Dibromoethane	7.1	
	Sulfur dioxide	2.9	

Table C-10. (Concluded)

Pesticide product name	Active ingredient		Product toxicity rating[b]
	Component	Concentration (%)	
Products containing five active ingredients			
Cooke Bug Shot Lawn Special Spray Concentrate[d]	1,2-Dichloroethane	20.0	2
	Cyclohexanone	4.0	
	Lindane	4.0	
	Petroleum distillate	24.0	
	Toxaphene	40.0	
49'er Gold Strike Bonanza Plant Spray[e]	1,2-Dichloroethane	10.25	3
	Copper oleate	15.25	
	Cube resins other than rotenone	2.00	
	Pyrethrins	0.50	
	Rotenone	1.00	
Old Scratch Concentrated Rotenone-Malathion	1,2-Dichloroethane	11.75	1
	Cube resins other than rotenone	3.75	
	Malathion	42.00	
	Pine oil	40.00	
	Rotenone	2.50	
Sirotta's Sircofume Liquid Fumigating Gas	1,2-Dichloroethane	1.0	3
	Carbon tetrachloride	96.0	
	Tetrachloroethylene	1.0	
	1,1,1-Trichloroethane	1.0	
	Trichloroethylene	1.0	
Products containing seven active ingredients			
KLX[d]	1,2-Dichloroethane	10.25	4
	Copper oleate	15.25	
	Cottonseed oil	35.25	
	Cube resins other than rotenone	2.00	
	Ethylene glycol	26.50	
	Pyrethrins	0.50	
	Rotenone	1.00	

[a]Unless otherwise indicated, the pesticide is an insecticide or miticide that is applied without dilution as a liquid fumigant.

[b]Toxicity scale is relative and is based on acute toxicity; 1 represents the highest level of toxicity.

[c]Spray in oil, use undiluted, not pressurized.

[d]Concentrate or emulsifiable.

[e]Concentrate, solution.

Source: EPA, 1979a.

may be exposed to relatively high concentrations of 1,2-dichloroethane (EPA, 1979a).

C.8.5 Miscellaneous Uses

In previous reports, 10% of minor 1,2-dichloroethane uses, 500 kkg, has been apportioned to miscellaneous applications such as color film manufacture, as a diluent for pesticides and herbicides, and amine carrier used in hydrometallurgical treatment of copper ores (EPA, 1978a). 1,2-Dichloroethane, though suggested as a component of specialized solvent formulations (i.e., amine carriers), is apparently no longer used for this purpose (Schurtz, 1980; Sudderth, 1980).

Approximately 150 kkg of 1,2-dichloroethane are used in the film industry, not in film manufacture *per se* but rather as a specialty solvent. Since the 1,2-dichloroethane used in this application is reported to be spread over a number of small, isolated steps in the manufacturing process, solvent recovery is not economically feasible, and therefore not practiced (Klanderman, 1980). A large majority of the 1,2-dichloroethane is completely destroyed by incineration, however, with no more than 5% ($\approx$8 kkg) emitted to the atmosphere during use (Klanderman, 1980).

1,2-Dichloroethane is also authorized for used as a stabilizer in soil and animal pesticide and soil fumigants (40 CFR 553-558; July 1, 1979). Use and production data for the above applications, however, are held as proprietary data by EPA; specific information, therefore, is unavailable at this time.

APPENDIX D

MUNICIPAL DISPOSAL OF 1,1- AND 1,2-DICHLOROETHANE

D.1 INTRODUCTION

This section deals with the ultimate disposition of 1,1- and 1,2-dichloroethane discharged to municipal waste facilities: publicly-owned treatment works (POTWs) and urban refuse landfills or incinerators. A summary material balance around each waste treatment category is shown in Table D-1.

D.2 PUBLICLY-OWNED TREATMENT WORKS (POTWs)

Loading of 1,1- and 1,2-dichloroethane to POTWs is largely dependent upon variations in industrial discharges and the type of industry in a particular municipal area. A framework for calculating the total 1,1- and 1,2-dichloroethane flow through the nation's POTWs (see Table D-1) is provided by data from a recent EPA study of treatment facilities (EPA, 1980); significant concentrations of dichloroethanes were found, however, in only one facility. A materials balance of dichloroethanes at treatment plants can be constructed using a total POTW flow of approximately 10^{11} l/day (EPA, 1978b). The compound 1,2-dichloroethane was detected in the influent of 3 of 20 POTWs with an overall mean of 1.05 μg/l (assumes the not detected are zero and the trace values are the quantifiable limit) (EPA, 1980). It is assumed for purposes of these calculations that influent and effluent flow rates are equal, i.e., that water loss from sludge removal and evaporation are small compared to influent flows. Dichloroethanes do not appear to be preferentially adsorbed by sludge. Using these assumptions, 36 metric tons (as an upper limit) were discharged from POTWs in 1978. In the single plant where 1,2-dichloroethane was found at a significant influent concentration (11 μg/l) approximately ninety percent was emitted to the atmosphere during treatment operations, a not surprising result considering the volatility of 1,2-dichloroethane. Assuming this phenomenon occurs at other POTWs, 32 kkg of 1,2-dichloroethane would be emitted to the atmosphere per year; 4 kkg would be discharged in effluent.

The average influent 1,1-dichloroethane concentration was 1.55 (it was detected in 11 of 20 POTWs). Based upon one plant where detectable levels were found in all sampling points, a partitioning of 8% to sludge, 1% to effluent, and 91% to air was assumed. Thus, approximately 52 kkg would be released to air, 4 kkg in sludge, and 1 to waters.

Table D-1. Dichloroethane Materials Balance: Municipal POTWs and Refuse (kkg/yr)

Source	Input	Environmental Releases		
		Air	Land	Water
POTW [a]	36 [b]	32		
			neg	4
URBAN REFUSE				
INCINERATION	unknown	unknown	unknown	unknown
LANDFILL	unknown		unknown	

a) Publicly Owned Treatment Works. Air: Unsubstantiated estimate. Based on a single plant survey where 90% of the 1,2,-dichloroethane present volatilized during treatment, see text.

b) Figures calculated from EPA data (see Table D-2): based on 10^{11} l/day total POTW flow and median values for; influent concentration = 1.05 μg/l.

D.3 URBAN REFUSE

The three options for handling of urban refuse are energy recovery (primarily by incineration), material recovery, and disposal through incineration or landfill. Urban refuse can be divided into two major components: a combustible fraction (paper, cardboard, plastics, fabrics, etc.) and a noncombustible fraction (ferrous and nonferrous metals, glass, ceramics etc.). There are no data however, concerning dichloroethane emissions from municipal incineration. Dichloroethanes are unlikely to be disposed of directly as municipal wastes.