EPA-450/3-77-010
March 1977

TECHNICAL GUIDANCE FOR CONTROL OF INDUSTRIAL PROCESS FUGITIVE PARTICULATE EMISSIONS

U.S. ENVIRONMENTAL PROTECTION AGENCY
Office of Air and Waste Management
Office of Air Quality Planning and Standards
Research Triangle Park, North Carolina 27711

EPA-450/3-77-010

TECHNICAL GUIDANCE FOR CONTROL OF INDUSTRIAL PROCESS FUGITIVE PARTICULATE EMISSIONS

by

PEDCo Environmental, Inc.
Chester Towers
11499 Chester Road
Cincinnati, Ohio 45246

Contract No. 68-02-1375
Task No. 33
Project No. 3155-GG

EPA Project Officer: Gilbert H. Wood

Prepared for

ENVIRONMENTAL PROTECTION AGENCY
Office of Air and Waste Management
Office of Air Quality Planning and Standards
Research Triangle Park, North Carolina 27711

March 1977

Agency

This report is issued by the Environmental Protection Agency to report technical data of interest to a limited number of readers. Copies are available free of charge to Federal employees, current contractors and grantees, and nonprofit organizations - in limited quantities - from the Library Services Office (MD-35), Research Triangle Park, North Carolina 27711; or, for a fee, from the National Technical Information Service, 5285 Port Royal Road, Springfield, Virginia 22161.

This report was furnished to the Environmental Protection Agency by PEDCo Environmental, Inc., Chester Towers, 11499 Chester Road, Cincinnati, Ohio 45246, in fulfillment of Contract No. 68-02-1375, Task No. 33. The contents of this report are reproduced herein as received from PEDCo Environmental, Inc. The opinions, findings, and conclusions expressed are those of the author and not necessarily those of the Environmental Protection Agency. Mention of company or product names is not to be considered as an endorsement by the Environmental Protection Agency.

Publication No. EPA-450/3-77-010

ACKNOWLEDGEMENT

Many individuals and organizations have been helpful in developing this report; for these contributions the project management extends its sincere gratitude.

Visits were made to the following industry associations: National Asphalt Pavement Association, Fred Kloiber, Director of Environmental Services and Operations; Portland Cement Association, Cleve Schneeberger, Vice President for Public Affairs; National Lime Association, R. S. Boynton, Executive Director; and Southern Furniture Manufacturing Association, Douglas Brackett, Secretary.

We would like to thank the following companies for the helpful and informative visits that were made to their plants: G. & W. H. Corson Co., Daniel W. Johnson; Black River Mining Co., Allan Cigallio; Lehigh Portland Cement Co., Kramer Schatzlein, Bob Burdock, Del Eggert; Lone Star Industries, Inc., Mike Reid, Roy Blankenship; W. J. Bullock, Inc., J. P. Barnhart; Lunkenheimer Co., Dale Hall, Bill Cook; Wyandotte Cement, Inc., Ted Weatherhead; Edward C. Levy Co., Gene Rogers; Valley Asphalt Corp., W. C. Lykins; Bernhardt Furniture Co., Colon Prestwood, William M. Deal; and Broyhill Furniture Co., Howard Bollinger.

Extensive review of and comment on the document was made by various industries and associations. These were: American Iron and Steel Institute Fugitive Emission Task Force, John E. Barker, Chairman; Lehigh Portland Cement Co., K. J. Schatzlein, Manager Environmental Protection; Portland Cement Association, Cleve Schneeberger, Vice President for

G7944-23

Public Affairs; Lone Star Industries, Inc., Mike Reid, Assistant to Technical Director; National Crushed Stone Association, F. A. Renninger, Senior Vice President; Kentucky Crushed Stone Association, Inc., John W. Sullivan, Executive Director; National Lime Association, Robert S. Boynton, Executive Director; AMAX, Inc., James C. Gilliland, Director Technical Services; American Foundrymen's Society, William B. Huelsen, Director Environmental Affairs; Smelter Control Research Association, Ivor E. Campbell, Technical Director; ASARCO, S. Norman Kesten, Assistant to the Vice President Environmental Affairs; Phelps Dodge Corp., H. Z. Stuart, Assistant to the President; and Cities Service Co., S. L. Norwood, Manager, Environmental Control. Their contributions were very helpful in preparing this document.

Several state and local air pollution control agencies were visited to get input from the ultimate user of the report. The agencies also reviewed and commented in detail on the document. We would like to thank the Texas Air Control Board, Roger Wallis, Henry E. Sievers, Sam Crowther, and staff; Jefferson County Department of Health, Birmingham, Alabama, Barry Robison, Henry Burnett; Illinois Environmental Protection Agency, Martin J. Sheahan and staff; Illinois Institute for Environmental Quality, Samuel G. Borras and staff; Michigan Division of Air Pollution Control, Lee Jager, Dan Meyer, and staff; Wayne County Air Pollution Control Division, Detroit, Michigan, Mort Sterling, William Achinger, and staff; and Ohio Environmental Protection Agency, Jack Wunderle, William Juris.

Assistance was received from the following private contractors and consultants: Midwest Research Institute, Dennis Wallis; William D. Balgord, Ph.D.; Monsanto Research Corporation, Thomas R. Blackwood; and TRC - The Research Corporation of New England, Henry J. Kolnsberg.

Review of and comment on this document from within the Environmental Protection Agency was made by: Stan Cuffe and Jim Crowder, Emission Standards and Engineering Division; James Southerland, Tom Pace, and Chuck Masser, Monitoring and Data Analysis Division; Darryl Tyler and Joe Sableski, Control Programs Development Division; William Vatavuk, Strategies and Air Standards Division; William Johnson and William Keith, Division of Stationary Source Enforcement; Gordon Rapier and Bill Belanger, Region III.

Special recognition for the following EPA personnel for their contributions in preparing the section on the Iron and Steel Industry: Gilbert Wood, Andrew Trenholm, Ken Woodard, and Reid Iversen, Emission Standards and Engineering Division; and Bernard Bloom, Division of Stationary Source Enforcement. Also for Phil Youngblood and Dave Barrett, Monitoring and Data Analysis Division, for their work on the sections concerning impact on ambient air quality.

Mr. Gilbert Wood served as Project Officer. He was assisted by Mr. David Dunbar, Control Programs Development Division. Mr. George A. Jutze, PEDCo Environmental, Inc., was the project director and John M. Zoller, project manager. Additional authors of the report were Robert Amick, Kenneth Axetell, Richard Gerstle, Robert Hearn, Thomas Janszen, Lawrence Weller, and Charles Zimmer.

TABLE OF CONTENTS

	Page
ACKNOWLEDGEMENT	iii
1.0 INTRODUCTION	1-1
1.1 Background	1-1
1.2 Significance of IPFPE	1-4
1.3 Related IPFPE Project Activities	1-5
1.4 Approach to Guideline Development	1-6
2.0 INDUSTRIAL PROCESS FUGITIVE PARTICULATE EMISSION SOURCES	2-1
2.1 Common Dust Sources	2-5
2.1.1 Transfer and Conveying	2-5
2.1.2 Loading and Unloading	2-14
2.1.3 Plant Roads and Haul Roads	2-24
2.1.4 Storage Piles	2-32
2.1.5 Waste Disposal Sites	2-43
2.2 Iron and Steel Production	2-51
2.2.1 Coke Manufacturing	2-51
2.2.2 Iron Production	2-68
2.2.3 Steel Manufacture	2-84
2.3 Primary Non-ferrous Smelting Industry	2-101
2.3.1 Primary Aluminum Production	2-101

TABLE OF CONTENTS (Continued)

		Page
2.3.2	Primary Copper Smelters	2-115
2.3.3	Primary Lead Smelters	2-130
2.3.4	Primary Zinc Production	2-150
2.4	Secondary Non-ferrous Industries	2-164
2.4.1	Secondary Aluminum Smelters	2-164
2.4.2	Secondary Lead Smelting	2-174
2.4.3	Secondary Zinc Production	2-186
2.4.4	Secondary Brass/Bronze (Copper Alloy) Production	2-201
2.5	Foundries	2-212
2.6	Materials Extraction and Beneficiation	2-230
2.7	Country and Terminal Grain Elevators	2-258
2.8	Portland Cement Manufacturing	2-280
2.9	Lime Manufacturing	2-297
2.10	Concrete Batching	2-311
2.11	Asphaltic Concrete Production	2-322
2.12	Lumber and Furniture Industry	2-332
3.0	CONTROL TECHNOLOGY FOR SOURCES OF IPFPE	3-1
3.1	Considerations for Selection of Control Techniques	3-1
3.2	IPFPE Control Options	3-7
3.3	Capture of the IPFPE's Prior to Control	3-14
3.4	Removal Equipment Costs and Installation Schedules	3-36

TABLE OF CONTENTS (Continued)

		Page
4.0	ESTIMATING THE AIR QUALITY IMPACT OF INDUSTRIAL PROCESS FUGITIVE PARTICULATE EMISSIONS (IPFPE's)	4-1
4.1	Introduction	4-1
4.2	Estimation of Short-term, Localized Impact	4-2
4.3	Estimation of the Long-term Area-wide Air Quality Impact	4-9
4.4	Measurement of IPFPE's (State-of-the-Art)	4-10
5.0	INTEGRATION OF IPFPE IMPACTS INTO THE STATE IMPLEMENTATION PLANNING PROCESS	5-1
5.1	Introduction	5-1
5.2	Procedures for Development of a Control Strategy for IPFPE	5-2
5.3	Factors Influencing the IPFPE State Implementation Planning Process	5-10
5.4	Summary of Existing Regulations Applicable to Industrial Process Fugitive Particulate Emissions	5-13
5.5	Model Regulations	5-22
5.6	Evaluation of Enforcement Procedures	5-33
APPENDIX A	GLOSSARY OF PERTINENT TERMS	A-1
APPENDIX B	LISTING OF CHEMICAL DUST SUPPRESSANTS	B-1
APPENDIX C	EXAMPLE PRELIMINARY DISPERSION ANALYSIS	C-1
APPENDIX D	EXAMPLE UPWIND/DOWNWIND TEST PLAN (FOR HYPOTHETICAL CEMENT PLANT)	D-1

LIST OF FIGURES

No.		Page
2-1	Map of Thornthwaite's Precipitation Evaporation Index Values for State Climatic Divisions	2-34
2-2	Climatic Factor Used in Wind Erosion Equation	2-45
2-3	Process Flow Diagram for Coke Manufacturing Showing Potential Industrial Process Fugitive Particulate Emission Points	2-53
2-4	Process Flow Diagram for Iron Production Showing Potential Industrial Process Fugitive Particulate Emission Points	2-71
2-5	Process Flow Diagram for Steel Production Showing Potential Industrial Process Fugitive Particulate Emission Points	2-88
2-6	Process Flow Diagram for Primary Aluminum Production Showing Potential Industrial Process Fugitive Particulate Emission Points	2-103
2-7	Average Composite Particle Size Distribution by Weight for Potroom Roof Ventilator Emissions	2-108
2-8	Process Flow Diagram for Primary Copper Smelting Showing Potential Industrial Process Fugitive Emission Points	2-117
2-9	Process Flow Diagram for Primary Lead Smelting Showing Potential Industrial Process Fugitive Particulate Emission Points	2-133
2-10	Process Flow Diagram for Primary Zinc Production Showing Potential Industrial Process Fugitive Emission Points	2-152
2-11	Process Flow Diagram for Secondary Aluminum Production Showing Potential Industrial Process Fugitive Particulate Emission Points	2-166

LIST OF FIGURES (Continued)

No.		Page
2-12	Process Flow Diagram for Secondary Lead Smelting Showing Potential Industrial Process Fugitive Particulate Emission Points	2-176
2-13	Process Flow Diagram for Secondary Zinc Production Showing Potential Industrial Process Fugitive Particulate Emission Points	2-188
2-14	Process Flow Diagram for Secondary Brass/Bronze (Copper Alloy) Production Showing Potential Industrial Process Fugitive Particulate Emission Points	2-203
2-15	Process Flow Diagram for Foundries Showing Potential Industrial Process Fugitive Particulate Emission Points	2-215
2-16	Process Flow Diagram for Material Extraction and Beneficiation Showing Potential Industrial Process Fugitive Particulate Emission Points	2-240
2-17	Process Flow Diagram for Country and Terminal Grain Elevators Showing Potential Industrial Process Fugitive Particulate Emission Points	2-262
2-18	Process Flow Diagram for Portland Cement Manufacturing Showing Potential Industrial Process Fugitive Particulate Emission Points	2-282
2-19	Process Flow Diagram for Lime Manufacturing Showing Potential Industrial Process Fugitive Particulate Emission Points	2-300
2-20	Process Flow Diagram for Concrete Batching Showing Potential Industrial Process Fugitive Particulate Emission Points	2-312
2-21	Process Flow Diagram for Asphaltic Concrete Manufacturing Showing Potential Industrial Process Fugitive Particulate Emission Points	2-324
2-22	Process Flow Diagram for Lumber and Furniture Production Showing Potential Industrial Process Fugitive Particulate Emission Points	2-334

LIST OF FIGURES (Continued)

No.		Page
3-1	General Air Flow Design Parameters for Commonly Used Hoods	3-16
3-2	Grinding Operation Hood System	3-17
3-3	Example Conveyor Belt Dump Hood	3-18
3-4	Hood Design Considerations	3-20
3-5	Typical Duct Configuration	3-26
3-7	Rectangular Capture Hoods Plate Area Requirements vs. Hood Length and L/W	3-29
3-8	Circular Hoods Plate Requirements	3-30
3-9	Labor Cost for Fabricated 10 Ga. Carbon Steel Rectangular Capture Hoods	3-32
3-10	Labor Cost for Fabricated 10 Ga. Carbon Steel Circular Capture Hoods	3-33
3-11	Range of Total Installed Costs for Ambient Temperature Fabric Filter Systems	3-38
3-12	Annual Operating Costs for Fabric Filter Systems as a Function of Gas Flow Rate and Usage	3-40
3-13	Range of Total Installed Costs for Wet Collector Systems	3-41
3-14	Annual Operating Costs for Wet Collector Systems as a Function of Gas Flow Rate and Usage	3-43

LIST OF TABLES

No.		Page
2-1	Transfer and Conveying Emission Factors	2-7
2-2	Control Technology Applications for Transfer and Conveying Sources	2-9
2-3	Features of Conveyor Enclosures	2-9
2-4	Emission Factors for Loading and Unloading Operations	2-17
2-5	Control Technology Applications for Loading and Unloading Operations	2-18
2-6	Storage Pile Fugitive Emission Factor Formulas	2-35
2-7	Example Correction Factors for Storage Pile Emission Formulas	2-37
2-8	Control Techniques for Waste Disposal Sites	2-47
2-9	Identification and Quantification of Potential Fugitive Particulate Emission Points for Coke Manufacturing	2-54
2-10	Pushing Emission Factors	2-56
2-11	Control Alternatives and Costs for Controlling Charging Emissions	2-60
2-12	Identification and Quantification of Potential Fugitive Particulate Emission Points for Iron Production	2-72
2-13	Control Techniques for Iron Production IPFPE Sources	2-78
2-14	Identification and Quantification of Potential Fugitive Particulate Emission Points for Steel Production	2-89

LIST OF TABLES (Continued)

No.		Page
2-15	Control Techniques for Steel Manufacturing IPFPE Sources	2-94
2-16	Identification and Quantification of Potential Fugitive Particulate Emission Points for Primary Aluminum Production	2-104
2-17	Raw Materials for the Production of One Mg of Aluminum	2-106
2-18	Emission Sources and Contaminants	2-107
2-19	Representative Particulate Size Distribution of Uncontrolled Effluents from Prebaked and Horizontal-Stud Soderberg Cells	2-109
2-20	Control Techniques for Primary Aluminum Production IPFPE Sources	2-110
2-21	Identification and Quantification of Potential Fugitive Particulate Emission Points for Primary Copper Smelters	2-118
2-22	Chemical Characteristics of Fugitive Particulate Emissions from Various Process Steps in Primary Copper Smelting	2-123
2-23	Control Techniques for Primary Copper Smelting IPFPE Sources	2-125
2-24	Identification and Quantification of Potential Fugitive Particulate Emission Points for Primary Lead Smelters	2-134
2-25	Concentrations of Lead, Cadmium, and Zinc in Fugitive Particulate Emissions of Various Primary Lead Smelting Operations	2-142
2-26	Control Techniques for Primary Lead Smelting IPFPE Sources	2-144
2-27	Identification and Quantification of Potential Fugitive Particulate Emission Points for Primary Zinc Production	2-153

LIST OF TABLES (Continued)

No.		Page
2-28	Control Techniques for Primary Zinc Production IPFPE Sources	2-159
2-29	Identification and Quantification of Potential Fugitive Particulate Emission Points for Secondary Aluminum Production	2-167
2-30	Effluent Characteristics from Secondary Aluminum Production	2-169
2-31	Control Techniques for Secondary Aluminum Smelters IPFPE Sources	2-171
2-32	Identification and Quantification of Potential Fugitive Particulate Emission Points for Secondary Lead Smelting	2-177
2-33	Control Techniques for Secondary Lead Smelting IPFPE Sources	2-183
2-34	Identification and Quantification of Potential Fugitive Particulate Emission Points for Secondary Zinc Production	2-189
2-35	Control Techniques for Secondary Zinc Production IPFPE Sources	2-197
2-36	Identification and Quantification of Potential Fugitive Particulate Emission Points for Secondary Copper, Brass/Bronze Production	2-204
2-37	Control Techniques for Secondary Copper, Brass/ Bronze Production IPFPE Sources	2-209
2-38	Types of Furnaces Used to Charge Metals in a Foundry Operation	2-212
2-39	Identification and Quantification of Potential Fugitive Particulate Emission Points for Foundries	2-216
2-40	Emission Characteristics for Various Foundry Operations	2-221

LIST OF TABLES (Continued)

No.		Page
2-41	Control Techniques for Foundry IPFPE Sources	2-223
2-42	Dust-Producing Operations by Mining Industry	2-231
2-43	Identification and Quantification of Potential Fugitive Particulate Emission Points for Material Extraction and Beneficiation	2-241
2-44	Summary of Control Efficiencies and Costs for Mining Fugitive Particulate Emission Sources	2-245
2-45	Guidelines for Differentiation of Country and Terminal Elevators	2-259
2-46	Identification and Quantification of Potential Fugitive Particulate Emission Points for Country and Terminal Elevators	2-263
2-47	Particulate Size Distribution for Elevator Leg Cyclone Inlet Test	2-269
2-48	Control Techniques for Grain Elevators IPFPE Sources	2-270
2-49	Typical Country Elevator Control Devices and Costs	2-276
2-50	Typical Terminal Elevator (Inland) Control Devices and Costs	2-277
2-51	Identification and Quantification of Potential Fugitive Particulate Emission Points for Portland Cement Manufacturing	2-283
2-52	Control Techniques for Portland Cement Manufacturing IPFPE Sources	2-290
2-53	Identification and Quantification of Potential Fugitive Particulate Emission Points for Lime Production	2-301
2-54	Control Techniques for Lime Manufacturing IPFPE Sources	2-306

LIST OF TABLES (Continued)

No.		Page
2-55	Identification and Quantification of Potential Fugitive Particulate Emission Points for Concrete Batching	2-313
2-56	Control Techniques for Concrete Batching IPFPE Sources	2-317
2-57	Identification and Quantification of Potential Fugitive Particulate Emission Points for Asphaltic Concrete Production	2-325
2-58	Control Techniques for Asphaltic Concrete Manufacturing IPFPE Sources	2-329
2-59	Identification and Quantification of Potential Fugitive Particulate Emission Points for the Lumber and Furniture Industry	2-335
2-60	Control Techniques for Lumber and Furniture Industry IPFPE Sources	2-338
3-1	Ventilation Rates for Typical Industrial Equipment	3-21
3-2	Typical Compliance Time Schedules for Installation of Fabric Filters and Wet Collectors	3-44
5-1	Microinventory of Particulate Emissions (Example)	5-7

1.0 INTRODUCTION

With the upcoming revision to State Implementation Plans (SIP), air pollution control agencies at all levels have expressed concern relative to the proper fashion in which to approach, evaluate and handle fugitive particulate emissions from industrial operations. There are many unanswered issues associated with this problem and further understanding and guidance is needed. Therefore, this document has been prepared to provide guidance to affected agencies in the development of revisions, where necessary, to particulate matter control strategies. In producing this report, a data base has been assembled from literature sources, on-going U.S. Environmental Protection Agency in-house or contractor project activities, air pollution control agency records and files, and visits to industrial facilities emitting and/or controlling fugitive particulate emissions. Additionally, throughout this document a number of key words or terms will be repetitiously used. In order to clarify our intended meaning, as well as to prevent possible misconceptions, a Glossary of these words or terms has been prepared (Appendix A).

1.1 BACKGROUND

Widespread failure to attain the national ambient air quality standards for particulate matter in many urban areas has resulted in reexamination of the nature of the urban particulate problem. Basically, the particulate control strategy developed as part of the original SIP's included an analysis of the contribution of conventional point and area

sources without much consideration of other less conventional sources of particulate. One of these sources is "Industrial Process Fugitive Particulate Emissions," often referred to hereafter in this document as "IPFPE." Basically, IPFPE result from either one or both of the following categorical groupings of particulate emission sources - "fugitive emissions" and "fugitive dust" originating within industrial facilities.

There are no universally accepted definitions to characterize and differentiate between the two separate "fugitive" categories. Fugitive dust emissions are generally related to natural or man-associated dusts (particulate only) that become airborne due to the forces of wind, man's activity, or both. Fugitive dust emissions may include windblown particulate matter from unpaved dirt roads, tilled farm lands, exposed surface areas at construction sites and the like. Natural dusts that become airborne during dust storms are also included as fugitive dusts. It has been found that fugitive dusts from the example sources noted above, as well as windblown natural particulate emissions from arid lands (desert) during dust storms, and other meteorological conditions, may cause ambient concentrations above national particulate matter standards, particularly in the West and Southwest.

Fugitive emissions, on the other hand, include those particulates that are emitted from industry-related operations and which escape to the atmosphere through windows, doors, vents, etc.; not through a primary exhaust system, such as a stack, flue or control system. Fugitive emissions may result from manufacturing operations, materials handling, transfer and storage operations, and other industrial processes where particulates escape to the atmosphere. In

other cases, fugitive emissions are more directly emitted to the atmosphere from those industrial processes that operate out-of-doors, such as coke ovens, rock-crushing operations at quarries, and sand-blasting operations. Fugitive emissions also result from poor maintenance of process equipment and from environmentally careless process operations. For example, fugitive emissions can result from leakage around coke oven doors when such doors cannot be properly sealed due to excessive warpage.

In this document, both emission categories will be considered as dictated by common practice relative to the specific industrial process being discussed. Therefore, for the purpose of this investigation, Industrial Process Fugitive Particulate Emissions (IPFPE) are defined as ... "Particulate matter which escapes from a defined process flow stream due to leakage, materials charging/handling, inadequate operational control, lack of reasonably available control technology, transfer or storage."

Because IPFPE are not emitted from a definable point, such as a stack, they cannot be easily measured by conventional techniques. Because of this difficulty, their emissions and subsequent impact on air quality are extremely difficult to estimate. This deficiency and the belief (since shown to be erroneous) that fugitive emissions were not significant resulted in a lack of attention given to fugitive emission sources. During the development of the original SIP's, States quantified emissions from all sources using the best available information to determine such emissions. Initial attention was given to control of point and area sources whose air quality impact could be more readily quantified. Thus, the emission control regulations ultimately adopted by the control agency focused primarily on control of conventional (non-fugitive) emission sources.

1.2 SIGNIFICANCE OF IPFPE

With the implementation of controls on stationary sources, many agencies have noted the apparent air quality impact of fugitive emissions. Some analyses have indicated that they often may have a greater effect on air quality in the immediate vicinity of a source than do stack emissions. Stack emissions are released above ground level, generally with a significant upward velocity that aids dispersion and dilution before the emissions reach a ground level receptor. However, most fugitive emissions, by their very nature, occur at or near ground level and remain there, where the localized impact on air quality is greatest.

While measurements of process and non-process fugitive emissions have proven difficult, estimates have been made indicating that fugitive emissions may comprise a large portion of the nationwide particulate emissions problem. For example, EPA has estimated that total fugitive emissions of particulate from electric arc furnace charging can be from 5 to 50 times the total stack emissions which occur during the normal operating period of a furnace fitted with emission controls. Further, a recent technical paper[1] reported that maximum ambient 24-hour particulate measurements observed around three fugitive emission sources in the Pittsburgh area (i.e., a wood products process, a new steel mill, and an old steel mill) were 655, 447, and 421 $\mu g/m^3$ respectively. Although it is not stated, stack emissions could be a part of these concentrations. Each of these concentrations is well above the 24-hour Primary Standard for Total Suspended Particulate and also above other observed measurements at sampling sites in the area which were not directly impacted by the fugitive emissions.

Thus, if the Primary Standards for TSP are to be attained and maintained nationwide, serious attention must be paid to the role which IPFPE play in these non-attainment problem areas.

1.3 RELATED IPFPE PROJECT ACTIVITIES

At the present time, a number of U.S. Environmental Protection Agency projects are investigating factors which are germane to either the measurement, sources, control, control costs, modeling, or evaluation of IPFPE. While this guideline attempts to utilize all currently-available and pertinent information from these projects, a summary of these activities is presented in order that the user of this document becomes aware of specific technical areas now receiving serious attention. These subject areas are tabulated as follows:

Subject of Project	Responsible EPA Component
Fugitive Emissions Measurement Techniques	Industrial Environmental Research Laboratory - RTP, N.C.
Iron, Steel and Gray Iron Control Technology Assessment of Fugitive Emissions	Industrial Environmental Research Laboratory - RTP, N.C.
Source Assessment of 50 Industries for Environmental Risk	Industrial Environmental Research Laboratory - RTP, N.C.
Iron and Steel Control Technology Assessment	Division of Stationary Source Enforcement - Washington, D.C. Emission Standards and Engineering Division - RTP, N.C.

Subject of Project	Responsible EPA Component
Continuing Evaluation and Development of Pollutant Control Techniques	Industrial Environmental Research Laboratory - RTP, N.C.
Fugitive Emissions, Lead Industry	Emission Standards and Engineering Division - RTP, N.C.
Emission Factors and Cost Analysis, Iron and Steel Industry (cooperative AISI/ EPA)	Emission Standard and Engineering Division - RTP, N.C.
NADB Emission Factor Development (continuing effort)	Monitoring and Data Analysis Division - RTP, N.C.
National Assessment of the TSP Problem, 14 Cities Study	Control Programs Development Division - RTP, N.C.
Non-Metallic Mineral New Source Performance Standards	Emission Standards and Engineering Division - RTP, N.C.

If further information on any of the above activities is desired, contact may be initiated through U.S. Environmental Protection Agency Regional Office personnel.

1.4 APPROACH TO GUIDELINE DEVELOPMENT

In order to prepare this guideline for control agencies' use in the development of necessary revisions to particulate matter control strategies, the following tasks were implemented:

Task 1 - Review all available information, published and unpublished, dealing with pertinent areas of industrial process fugitive particulate emissions from industrial process sources. This literature search was constrained to the subject of fugitive particulate emissions from industrial process operations, as opposed to fugitive dust emissions from sources such as unpaved roads, agricultural activities, and general wind-blown dust.

Task 2 - Contact all U.S. Environmental Protection Agency managers whose projects dealt with any affiliated areas of fugitive emissions in order to identify, collect, and utilize the latest available information on fugitive emission control technology, measurement techniques, cost of controls, and other relevant information.

Task 3 - Visit representative state and local air pollution control agencies currently dealing with fugitive emissions to determine the effectiveness of control strategies, control technology, costs associated with fugitive emission control, and experience in developing and enforcing pertinent regulations.

Task 4 - Contact trade associations and specifically identified industries to arrange facility visits for the purpose of identifying and tabulating data on well-controlled and poorly-controlled operations and collect information on control technology and costs.

Task 5 - Review available ambient air quality data near fugitive emission sources for which measurements are available or can be estimated, to determine the impact fugitive emissions have on localized air quality. Acquisition of these data was coordinated with all phases of the information gathering process. However, special effort was made to obtain ambient data during the agency/industrial facility visits.

Task 6 - Compile all of the information and data acquired in Tasks 1-5 into a Phase I Report. This document, which tabulates and summarizes all information/data in an organized fashion, served as the "data base" report and provides resource reference for the Guideline.

Task 7 - Utilizing the information files and data base accumulated, produce a Guideline for agencies to use in the development of SIP revisions dealing with control of IPFPE.

Using this approach, the Guideline addresses the following topical areas:

- Specific parameters affecting IPFPE from each major industrial category. Included are process point emission estimates (with reliability factors) plus control technology applications and costs for specific installations.

- A general discussion of IPFPE source control technology, especially noting design requirements for ventilation, hooding and specific control devices. Basic cost information for checking and estimating purposes is provided along with general guidance on installation schedules.

- Means of determining the IPFPE air quality impact from individual facilities, including state-of-the-art modeling and measurement techniques. An example exercise, based on a hypothetical plant, has been developed to demonstrate an approach for estimating air quality impact from fugitive particulates.

- Integration of IPFPE impacts into the State Implementation Plan modification process. Strategy development, enforcement experience and approaches, and example regulations are presented.

REFERENCES FOR SECTION 1.0

1. Lebowitz, M.F. Short Term Testing for Fugitive Dust Effect. Presented at the 68th Annual Meeting of the Air Pollution Control Association. Boston, Massachusetts. June 1975. APCA Publication No. 75-25.4.

2.0 INDUSTRIAL PROCESS FUGITIVE PARTICULATE EMISSION SOURCES

Major industries with potential sources of Industrial Process Fugitive Particulate Emissions (IPFPE) are identified and included in this section. For each of these industries, the following information is presented:

- process description
- identification of IPFPE sources
- emission estimates and an example plant inventory of IPFPE sources
- IPFPE emission characteristics
- control technology options for IPFPE sources.

A range of emission estimates is presented where available. It is not the intent of this document to determine a single factor for each IPFPE source, but rather to present a range of values. However, when only one estimate was found in the literature, that number is shown. For some sources, emission factors were not available in the literature. In these cases engineering judgment, based on emission factors for similar sources and observations during plant visits, was used to estimate the emission factors. A reliability rating is indicated for each fugitive emission estimate. This is an indicator of the supportive data used to develop the factor. The reliability ratings in this document correspond to the rating system used in "Compilation of Air Pollutant Emission Factors," Publication Number AP-42.[1] These ratings are defined in AP-42 as follows:

A - Excellent

B - Above average

C - Average

D - Below average

E - Poor

All emission rates in this document were determined to have ratings of C, D, or E. The criteria used to determine these ratings are presented below:

C - Supportable by multiple test data.

D - Supportable by limited test data and engineering judgment.

E - Supportable by best engineering judgement (visual observation, emission tests for similar sources, etc.).

The model plant IPFPE inventory is not intended to represent a "typical" plant, only an example application of the emission estimates. An average of any range of factors presented was used in developing the inventory. For any specific plant, consideration of operating conditions must be made when selecting the emission rate. Also, factors with an "E" rating are at best order of magnitude and actual emission rates at a given facility could differ significantly. Inventory techniques rather than an example plant inventory were included for the common dust sources and minerals extraction sections since the common dust sources are often found with other processes and the mining industry is so diverse.

Emission factors for some of the fugitive emission sources identified in this document are contained in AP-42. Additional fugitive emission factors will be included in future editions of AP-42, therefore the latest edition should always be used. Also, emission factors for stack emissions are contained in that document.

In addition, data were included in this report from a current project by Midwest Research Institute* entitled "A Study of Fugitive Emissions From Metallurgical Processes." However, rather than showing the MRI Monthly Reports as references in this document, the original references were cited whenever possible.

Many industries have common types of IPFPE and fugitive dust sources. Section 2.1 covers these common dust sources in detail. For industries not specifically covered by this document, refer to similar processes that are discussed herein and the section on common dust sources.

---

* Performed for the U.S. Environmental Protection Agency, Industrial Environmental Research Laboratory, Research Triangle Park, North Carolina, under Contract No. 68-02-2120.

REFERENCES FOR SECTION 2.0

1. Compilation of Air Pollutant Emission Factors. U.S. Environmental Protection Agency. Office of Air Quality Planning and Standards. Research Triangle Park, North Carolina. Publication No. AP-42. February 1976.

2.1 COMMON DUST SOURCES

Some industrial process fugitive emission sources occur at many plants. Rather than repeating descriptions of these sources for each industry, they are described in general terms in this section. The industrial process emission sources described here include transfer and conveying and loading and unloading. Only the unusual aspects of these common sources will be discussed in the sections on fugitive emissions from specific industries.

Also, there are several potential sources of fugitive dust within plant boundaries that are not directly associated with process operations. However, these sources are considered to be IPFPE because they occur on plant property. They should be included in an emission inventory or air quality analysis of the plant since they are often of the same order of magnitude as the fugitive process emissions. The fugitive dust sources described here include roads, storage piles, and waste disposal sites.

2.1.1 Transfer and Conveying

Description - Material transfer and conveying operations are common to nearly all processing industries. Equipment includes belt conveyors, screw conveyors, bucket elevators, vibrating conveyors, and pneumatic conveyors. The type of conveying equipment varies with the application, determined primarily by the quantity and characteristics (size, specific gravity, moisture content, etc.) of the material being handled, the transfer distance and elevation, and conditions of the working environment.

Generally, conveyor runs between processes are less than 300 meters (1000 ft). However, belt conveyors used for overland transfer, such as for moving coal from a preparation plant at a captive mine site to a power plant, may be over 20 kilometers (12 miles) long.

Loss of material from conveyors is primarily at the feeding, transfer, and discharge points and occurs due to spillage or windage. The majority of particulate emissions are generally from spillage and mechanical agitation of the material at transfer points. However, emissions from inadequately enclosed systems can be quite extensive.

Wetting can provide good control in many instances. However excessive moisture in the material or air currents can create discharge problems, especially on belt conveyors. Wet material being conveyed may cling to the belt and fall from the return strand. Therefore, many conveyor systems are enclosed, both for maintenance of product quality and air pollution control.

Emission Rates - Transfer/conveying is one of the most variable process operations with respect to fugitive particulate emission rates. Emission rates vary with the type of conveyor system being used, the material being transferred, the extent of coverage of the conveying system, and, for outside systems, local meteorological conditions.

The emission rate data available for transfer and conveying operations are presented in Table 2-1. Emission rates for other materials can be roughly estimated by comparative engineering judgment with these rates.

Table 2-1. TRANSFER AND CONVEYING EMISSION FACTORS

Material transferred	Uncontrolled emission factor per unit of material transferred	Reliability factor
Coal	0.02-0.48 kg/Mg[a,b,c] (0.04-0.96 lb/ton)	E
Coke	0.012-0.065 kg/Mg[c,d] (0.023-0.13 lb/ton)	E
Dry phosphate rock	0.75 kg/Mg[e] (1.5 lb/ton)	D
Sand	0.15 kg/Mg[b] (0.3 lb/ton)	E
Grain	1.0-2.0 kg/Mg[f] (2.0-4.0 lb/ton)	E
Iron ore	1.0 kg/Mg[g] (2.0 lb/ton)	E
Lead ore	0.82-2.5 kg/Mg[h] (1.64-5.0 lb/ton)	E

[a] Reference 1.
[b] Reference 2.
[c] Reference 3.
[d] Reference 4.
[e] Reference 5. Includes conveying and loading onto railroad cars.
[f] Reference 6.
[g] Reference 7.
[h] Reference 8.

Inventory Techniques - The annual operating parameter or throughput for the material being handled should be determined. Application of the appropriate emission factor and control efficiency to this annual throughput yields the annual emission rate.

Characterization of Fugitive Emissions - Like most IPFPE sources, emissions from transfer and conveying have the same chemical characteristics as the materials being

processed (conveyed). The size of emissions is generally less than 100 μm diameter, except for extremely light materials.

Control Technology - Possible control technology applications for transfer and conveying IPFPE sources are summarized in Table 2-2 and discussed in greater detail below.

Particulate emissions are either created mechanically, such as from the movement of belts or at transfer points, or by the force of the wind on unprotected conveyor sections. The mechanically generated emissions are more easily controlled than most fugitive emissions from windage.[5]

The mechanically generated dust is a function of material particle size and machinery speed. Generally, mechanically generated dust may be controlled by covering or hooding the area emitting the dust, application of a negative pressure to the hooded area with exhaust and subsequent collection by control equipment.

Enclosures also protect the conveyor systems and transfer points from windage losses. As delineated in Table 2-2, enclosures can either be complete (e.g., tunnels for belt conveyors) or partial. Table 2-3 summarizes the features of complete and partial enclosures.

The major operating problem with belts is the sticking of material to the belt after leaving the point of transfer. This problem is generally reduced by a blade or brush which scrapes the bottom of the underside of the belt. Other devices such as vibrators and air jets have been tried with very limited success, due to their expense and large number of operational and maintenance problems.[9] Moistening the underside of the belt has been shown to reduce emission levels at a chain feeder by 15 percent.[10]

Table 2-2. CONTROL TECHNOLOGY APPLICATIONS FOR TRANSFER AND CONVEYING SOURCES

Emission points	Control procedure
Conveyor System (belt, bucket elevator, etc.)	Enclosure ° top covered ° sides and top covered ° completely enclosed Wet suppression (water, chemical, foam) at conveyor feed points. Belt scrapers and wipers Mechanical belt turnovers Replacement with pneumatic system or screw conveyor
Transfer and transition points	Enclosure Hoods, covers, or canopies with exhaust to removal equipment (fabric filters, and wet-collectors). Wet suppression (water, chemical foam).

Table 2-3. FEATURES OF CONVEYOR ENCLOSURES[9]

Features	Top covered	Sides protected	Completely enclosed
Easy to vent	x	x	xxxx
Easy to maintain	xxxx	xxx	xx
Accumulated dust may be easily removed	xxxx	xxx	xx
Eliminates dust	xx	xxx	xxxx
Reduces noise	x	xxx	xxxx

Key: x Does not work
xx Marginal
xxx Good
xxxx Excellent

Control by wet suppression methods includes the application of water, chemicals, and foam. The point of application is most commonly at the conveyor feed and discharge points, with some applications at conveyor transfer points. Wet suppression with water only is a relatively inexpensive technique; however, it has the inherent disadvantage of being short-lived. Control with chemical (added to water for improved wetting) or foam is longer lasting but more expensive than water alone.

In sampling at six different transfer and conveying locations at a coal mine, dust emissions were found to be 34 percent lower when water was sprayed onto the belts.[10] When foam was used instead of water, emissions at the six sampling locations were reduced 73 percent compared to dry operation.

Foam is effective in dust suppression because small particles (in the range of 1 to 50 μm diameter) break the surface of the bubbles in the foam when they come in contact, thereby wetting the particles. Particles larger than 50 μm only move the bubbles away. The small wetted particles then must be brought together or brought in contact with larger particles to achieve agglomeration. If foam is injected into free-falling aggregate at a transfer point, the mechanical motion provides the required particle to bubble contact and subsequent particle to particle contact.

For as-mined coal or quarried rock, the normal application rate for foam during transfer and conveying is 0.06 m^3/Mg (2 ft^3/ton) of material.[11*] The cost of this treatment per application point is about $0.02 per Mg ($0.02 per ton) of material transferred. More than one injection point

---

* Mention of company or product names is not to be considered as an endorsement by the U.S. Environmental Protection Agency.

may be required for particularly dusty material or if the foam is also intended to prevent emissions while the material is in storage.

Highly diluted chemical wetting agents are applied by water jet ahead of any points in the conveying system where dusting occurs. The wetting agent breaks down the surface tension of the water, allowing it to spread further, penetrate deeper, and wet the small particles better than untreated water. With mechanical agitation of the material, the small particles agglomerate. For effective control, the spray should be applied at each point where the particles might be fractured, allowed to free fall, or subject to strong air currents.

Cost estimates were made for wet suppression systems using wetting agents at hypothetical rock crushing plants of 270, 540, and 900 Mg/hr (300, 600, and 1000 tons/hr) operating rates.[12] The capital and operating costs are summarized below:

	Cost, dollars		
	270 Mg/hr (300 ton/hr)	540 Mg/hr (600 ton/hr)	900 Mg/hr (1000 ton/hr)
Total capital cost	$44,000	52,000	62,000
Total operating costs per unit of stone produced	0.017/Mg (0.015/ton)	0.012/Mg (0.011/ton)	0.010/Mg (0.009/ton)

Replacement of existing belt conveyors and bucket elevators with pneumatic conveyors or screw conveyors is a very effective method for eliminating fugitive emissions from processes involving relatively small sized material (e.g. powders, pellets, and other granular material). Fabric filters are most often used to clean the conveying air from these systems.

REFERENCES FOR SECTION 2.1.1

1. Evaluation of Fugitive Dust from Mining, Task 1 Report. PEDCo-Environmental Specialists, Inc., Cincinnati, Ohio. Prepared for Industrial Environmental Research Laboratory/REHD, U.S. Environmental Protection Agency, Cincinnati, Ohio. Contract No. 68-02-1321, Task No. 36, June, 1976.

2. Personal Communication from G. McCutchen, U.S. Environmental Protection Agency, Office of Air Quality Planning and Standards, Research Triangle Park, North Carolina, to Midwest Research Institute, Kansas City, Missouri. February 1976.

3. Transmittal from the American Iron and Steel Institute to Mr. Don Goodwin of the U.S. Environmental Protection Agency, Office of Air Quality Planning and Standards, Research Triangle Park, North Carolina. Data contained in table entitled Source Data for Steel Facility Factors. July 13, 1976.

4. Internal Memo, to George B. Crane from Reid Iversen, entitled Emission Factors for the Iron and Steel Industry. U.S. Environmental Protection Agency, Research Triangle Park, North Carolina. December 8, 1976.

5. Fugitive Dust from Mining Operations--Appendix, Final Report, Task No. 10. Monsanto Research Corporation, Dayton, Ohio. Prepared for U.S. Environmental Protection Agency, Research Triangle Park, North Carolina. May 1975.

6. Emissions Control in the Feed and Grain Industry, Volume 1. Engineering and Cost Study. Midwest Research Institute, Kansas City, Mo. Prepared for U.S. Environmental Protection Agency, Office of Air and Water Programs. EPA-450/3-73-003a. December 1973. p. 118.

7. Gutow, B.S., An Inventory of Iron Foundry Emissions. Modern Casting. January 1972.

8. Vandegrift, A.E. and L.J. Shannon. Handbook of Emissions, Effluents, and Control Practices for Stationary Particulate Pollution Sources. Midwest Research Institute. Prepared for U.S. Environmental Protection Agency. Contract No. CPA 22-69-104. November 1, 1970.

9. Cross, F.L. Jr. and Forehand, G.D. Air Pollution Emissions from Bulk Loading Facilities, Volume 6, Environmental Nomograph Series. Technomic Publishing Co., Inc., Westport, Connecticut, 1975. pp. 3-4.

10. Seibel, Richard J. Dust Control at a Transfer Point Using Foam and Water Sprays. U.S. Bureau of Mines, Washington, D.C. Technical Progress Report 97. May, 1976.

11. Cole, Howard J. Foam Suppressants in the Control of Source and Fugitive Emissions. Deter Company, Inc., East Hanover, N.J. February, 1976.

12. Evans, Robert J. Methods and Costs of Dust Control in Stone Crushing Operations. U.S. Bureau of Mines, Pittsburgh, Pa. Information Circular 8669. 1975.

2.1.2 Loading and Unloading

Description - Loading and unloading bulk material is common to many processing industries. It involves transfer of the material between interim storage facilities and trucks, ships, barges, or rail cars (hopper cars and box-cars). While loading and unloading operations can be either for external transportation of material to or from a facility or for internal transportation within a facility (for example, internal transportation might consist of loading of a mining haul truck with ore via a front-end loader for subsequent unloading to a crushing process), this discussion is restricted to operations for external transportation. Loading and unloading for internal transportation are more industry specific, and are therefore addressed separately in individual industry sections.

Fugitive emissions from these operations emanate primarily from the mechanical agitation of the material as it strikes the sides and bottom of the transportation vehicle and by the turbulence created by the air which is displaced as the material is moved into or out of the transportation vehicle. Windage losses are generally minor during loading and unloading; however, heavy winds can cause severe problems, especially when these operations are inadequately enclosed.

Delivery of the bulk material to the cargo holds of ships and interiors of trucks and rail cars is typically accomplished by belt conveying, gravity discharge from elevated storage, pneumatic systems, or clam-shell bucket cranes. On cargo vessels, a rapidly moving horizontal conveyor called a slinger throws the product at high velocities out to the far reaches of the hold which cannot be reached directly from the hatch opening. Fugitive emissions

from loading barges and ships can be quite significant and very difficult to control, due to the difficulty in effectively containing and exhausting the expansive openings in the holds of these vessels.

The same facility is often employed for both loading and unloading of trucks and rail cars. Such a facility normally consists of a drive-through shed affording some protection from precipitation and wind, but offering minimal enclosure for suppression of fugitive emissions. These drive-through sheds are sometimes equipped with a roll-down door on one end or shrouds at both ends (to prevent a wind tunnel effect), although more commonly they are unprotected at both ends to allow entrance and departure as quickly as possible. Air is usually blowing through this "tunnel" at speeds greater than the wind in open areas away from the enclosure, thereby aggravating the fugitive emission problem and making it more difficult to contain and capture the emissions.[1]

The quantity of dust emitted during barge and ship unloading is relatively small in comparison with railroad car and truck unloading. Unloading is normally accomplished by belt conveyors which are fed from hoppers in ship's holds, by means of retractable bucket type elevators that are lowered into the holds of barges and ships, or by clamshell buckets which are most often open at the top and poorly sealed at the bottom.

Emission Rates - Emission rates vary with the moisture content of the material being loaded or unloaded, the type and configuration of the vehicle (truck, rail car, barge, and ship), the method of loading/unloading, wind speed, and efficiency of the control technique employed.

Emission rate data available from field tests and engineering judgement for loading and unloading operations are presented in Table 2-4.

Inventory Techniques - The annual throughput for the bulk material shipped or received should be determined. Application of the appropriate emission factor and control efficiency to this annual throughput yields the estimated annual emission rate.

Characterization of Fugitive Emissions - Emissions from bulk material loading and unloading have the same chemical characteristics as the materials being hauled. However, the size distributions of the emissions is somewhat independent of the material, since only the fines become airborne.

Control Technology - Various control technology applications for loading IPFPE are presented in Table 2-5. These techniques can be used alone or at times in various combinations. Generally, the simultaneous use of more than one technique will provide increased levels of control.

Rail car and truck loading - To minimize particulate emissions from rail car and truck loading, the entire operation can be enclosed by the use of doors on the loading shed. This prevents the wind tunnel effect and whatever dust is emitted remains in the enclosure where it can settle to the ground. By venting the entire enclosure to a control device, dust leakage around the doors and any other openings can be prevented thus ensuring near 100 percent control. The grain industry utilizes this technique widely.

Exhausting the car or truck body to a dust removal device reduces emissions if the body is fairly well enclosed. In open type rail or truck bodies this technique is not too effective.

Choke-feed eliminates free fall of material into the car or truck. In this technique the mouth of the feed tube

Table 2-4. EMISSION FACTORS FOR LOADING AND UNLOADING OPERATIONS

Material/Operation	Uncontrolled Emission Factor	Reliability factor
Dry phosphate rock products/loading or unloading - railcar and truck	0.75 kg/Mg[a] (1.5 lb/ton)	C
Taconite pellets/ rail car unloading in drive-through shed	0.015 kg/Mg[b] (0.03 lb/ton)	E
Taconite/ship loading by belt conveyors	0.01 kg/Mg[b] (0.02 lb/ton)	E
Coal/hopper car unloading, or barge loading	0.2 kg/Mg[c] (0.4 lb/ton)	E
Grain/loading or unloading		
rail - drive-through shed	1.5-4kg/Mg[d] (3-8 lb/ton)	D
truck drive-through shed	1-4 kg/Mg[d] (2-8 lb/ton)	D
barge	1.5-4 kg/Mg[d] (3-8 lb/ton)	D

[a] Reference 2.

[b] Reference 3.

[c] Reference 4.

[d] Reference 1.

Table 2-5. CONTROL TECHNOLOGY APPLICATIONS FOR LOADING AND UNLOADING OPERATIONS

Emission Points	Control Procedure
Loading	
Railcar, truck	° Drive through enclosure with doors at both ends. ° Exhaust of entire enclosure to dust removal equipment. ° Movable hood over hatch opening. ° Exhaust of car hopper to dust removal equipment. ° Choke-feed or telescopic chute to confine and limit free-fall distance (gravity loading). ° Wet suppression (water, chemicals).
Barge and ship	° Use of tarpaulins or covers over the holds. ° Canopy and exhaust system over the loading boom, with attached tarps around the hatch. ° Exhaust of ship hold to dust removal equipment. ° Choke-feed or telescopic chute to confine and limit free-fall distance. ° For tanker types, use of gravity filler spouts with concentric outer exhaust duct to control equipment. ° Wet suppression (water, chemicals).

Table 2-5 (cont'd). CONTROL APPLICATIONS FOR LOADING AND UNLOADING OPERATIONS

Emission Points	Control Procedure
Unloading	
Railcar, truck	° Drive-through enclosure with doors at both ends. ° Exhaust of enclosure to dust removal equipment. ° Exhaust air from below grating of receiving hopper to removal equipment. ° Choke feeding to receiving pit (hopper car and hopper truck). ° Unloading with screw conveyor (box car). ° Wet suppression (water, chemicals). ° Utilize a pneumatic unloading system.
Barge and ship	° Enclosure of top of clamshell bucket with transparent material and maintenance of closure seals and teeth on bottom of bucket. ° Enclosure of shoreside receiving hopper. ° Exhaust of enclosed shoreside receiving hopper to dust removal equipment.

is immersed in the material being unloaded. This technique only works for fairly free-flowing dry material. A telescopic chute or spout also essentially eliminates the free-fall distance of the material being loaded. This type of system can be used on all types of material. Both the choke-feed and telescopic chute methods are only partially effective in eliminating emissions since the surface of the loaded material is constantly disturbed by new material. This surface is subject to wind and dust entrainment.

Movable hoods, exhausted to a dust removal system can be placed over the filling hatch in some types of truck and railcars during loading. By keeping other openings on the body closed, any dust generated in loading must be emitted through the single open hatch. A hood with sufficient air flow mounted around this opening could capture most of the dust generated.

Wet suppression techniques when applied to loading operations can reduce airborne dust to some extent. The loading process naturally breaks up surface coatings, but some small dust particles will adhere to larger pieces so as not to become entrained. Many materials can not be readily wetted and this technique could not be used for these materials.

Barge and ship loading - Due to their larger size, barge and ship loading present unique problems for dust control. However, a number of control techniques have been developed and utilized especially at some of the larger shipping terminals.

The use of tarpaulins or similar covers over hatches on ships and enclosed barges reduces air borne emissions by preventing their escape. Air, displaced by the material

being loaded, causes the hold to become slightly pressurized during loading, and the hold must be vented at some point if the hatches are air tight. Thus, a more effective control system incorporates an exhaust system for the hold. This exhaust system is converted to a dust control system such as fabric filter with the collected material being returned to the hold. Such a system can practically eliminate loading emissions if carefully maintained and properly operated. The use of a canopy hood and exhaust system over the loading boom is less effective than a totally enclosed system, but can still reduce emissions and is a viable alternative for open barges. Effective utilization of this technique requires some type of wind break to increase the hood capture efficiency.

Choke feed and telescopic chutes or spouts as previously described can also be used for loading, both enclosed and open ships or barges. Wet suppression techniques may also help reduce airborne emissions if the product specifications do not prohibit use of this technique.

Rail car or truck unloading - Many of the unloading dust control techniques are identical to the loading techniques. When a rail car or truck is tilted and materials are dumped into an underground chamber through a grating, exhausting air from this chamber through a control device will effectively reduce emissions. By causing air to flow down through the grating, dust emissions are contained. The face velocity of air through the grating is a critical design parameter in this technique. Unloading cars with a screw conveyor causes less distribution of the material and thereby less dust. Problems of material handling and time requirements limit the application of this technique. Pneumatic unloading of very fine materials such as cement,

chemicals, or flour is an effective and widely used technique that practically eliminates dust emissions. With this system, careful maintenance of hose fittings and the fabric filter through which the conveying air exhausts is required.

Barge and ship unloading - Control of barge and ship unloading requires enclosure of the receiving point on the shore and possibly exhausting that enclosure to a control device. A good enclosure with an exhaust system can provide essentially 100 percent capture.[5*] For open ships and barges which use buckets and conveyors, a partially enclosed bucket will reduce windblown dust. When observation of the bucket by the operator is required, a transparent heavy plastic sheet can be used as a cover. This system is only partially effective and must usually be supplemented with other controls such as tighter fitting covers, wind breaks, or possibly wet suppression.

---

* Mention of company or product names is not to be considered as an endorsement by the U.S. Environmental Protection Agency.

REFERENCES FOR SECTION 2.1.2

1. Emissions Control in the Feed and Grain Industry, Volume 1. Engineering and Cost Study, U.S. Environmental Protection Agency, Office of Air and Water Programs. EPA-450/3-73-003a. December 1973. pp. 118.

2. Emission estimate derived from a composite of six different loading/unloading operations' emissions as reported by three Florida phosphate plants. Unpublished paper prepared by Kenneth Axetell, PEDCo-Environmental Specialists, Inc., under U.S. Environmental Protection Agency Contract No. 68-02-1375, Task Order No. 9. March 1975.

3. Cross, F.L. Jr. and Forehand, G.D. Air Pollution Emissions from Bulk Loading Facilities, Volume 6, Environmental Nomograph Series. Technomic Publishing Co., Inc., Westport, Connecticut, 1975. pp. 3-4.

4. Environmental Assessment of Coal Transportation. PEDCo-Environmental Specialists, Inc. Prepared for U.S. Environmental Protection Agency. Contract No. 68-02-1321 Task 40, October 15, 1976. pp. 4-38 and 4-51.

5. Plant Visit. J.M. Zoller and R.S. Amick, PEDCo-Environmental, Inc., and G.H. Wood, U.S. Environmental Protection Agency. Visited Wyandotte Cement, Inc. Wyandotte, Michigan. October 26, 1976.

2.1.3 Plant Roads and Haul Roads

Description - Roads, both paved and unpaved, are a very common source of fugitive dust in plant areas. Plant roads differ from public roads in that they normally carry a large percentage of truck and equipment traffic and traffic speeds are much lower. Unpaved plant roads are usually better maintained than unpaved public roads, with many of the plant roads being oiled or compacted as a result of the heavy loads. The roads are well maintained for several reasons: reduced equipment repairs, improved employee working conditions, and better initial construction. Many plant roads have relatively low traffic volumes; others, particularly in the mining industry, are only temporary.

Dust on the surface of paved roads is deposited by such processes as mud track-out on vehicle tires, atmospheric fallout, spillage or leakage from trucks, pavement wear and decompostion, runoff or wind erosion from adjacent land areas, deposition of biological debris, wear from tires and brake linings, and wear of anti-skid compounds. This material is reentrained by contact with tires and by the air turbulence created by passing vehicles.

On unpaved roads, the road base itself serves as the main source of dust. As with paved roads, the dust becomes airborne by contact with vehicles' tires and by air turbulence from passing vehicles. Also, some of the fugitive dust from unpaved roads is attributed to wind erosion. On both paved and unpaved roads, traffic movement causes the continuing mechanical breakdown of large particles on the road surface, thus providing new material in the suspended particulate size range.

In some instances, the road shoulders are also a source of fugitive dust emissions. If the shoulders consist of loose material or do not receive the same dust control

measures as the main road surface (e.g., watering, oiling, or street cleaning), they can produce significant amounts of fugitive dust.

Emission Rates - All field testing to date for emission factor development has been on public roads. Some estimates of emission rates for trucks on unpaved haul roads were made by modifying the published factor for unpaved roads to account for difference in tire size and speed and for more frequent watering of the haul roads. Insufficient data are available on conditions of paved plant roads compared to public roads to make any similar modifications for their emission factors.

Emission factors for both paved roads and unpaved roads are based on the vehicle-kilometers of travel (VKT) or vehicle-miles of travel (VMT) on the roads. Reported values[1] for paved roads have varied from approximately 0.6 to 12 gm/VKT (1 to 20 gm/VMT) by such diverse sampling methods as isokinetic hi vol measurements immediately downwind, impactors placed on trailers, microscopic analysis of particulate matter on urban hi vols, and tracer studies. The median value from these studies and the current EPA-recommended emission factor is 3.8 gm/VKT (6.1 gm/VMT).[2] This average emission rate is apparently affected by the amount of loose surface material on the street and by vehicle speeds. Because of the limited amount of testing associated with each of these paved road sampling studies and the lack of data on the effect of variables such as surface loading and vehicle speed, the average emission factor is probably accurate only within a range as wide as all the reported values, 0.6 to 12 gm/VKT (1 to 20 gm/VMT), for specific applications. More comprehensive sampling is now being done in at least three different studies, so the reliability of

available emission factors should improve within the next year.

EPA's published emission factor for unpaved roads is:[3]

$$EF = (0.60)(0.23)(s)(S/48)(1-W/365)$$

$$[EF = (0.60)(0.81)(s)(S/30)(1-W/365)]$$

where EF = emission factor, kg/VKT (lb/VMT)

0.6 = average fraction of emitted particulate in the suspended particulate size range (less than 30 μm diameter)

s = silt content, percent, within the limits of 5 to 15 percent

S = average vehicle speed, km/hr (mph)

W = days with 0.025 cm (0.01 inch) or more of precipitation or reported snow cover

Based on the comparative widths of tire faces on off-highway mining trucks, this factor was multiplied by 2.5 to obtain an emission factor for mining haul roads.[4] Normal speeds on haul roads are 24 to 32 km per hour (15 to 20 mph).

Emission rates intermediate between those for unpaved public roads and mining haul roads, but calculated with assumptions analogous to those shown above for haul roads, may be appropriate for many unpaved plant roads.

Inventory Techniques - VKT (VMT) within a defined area such as plant boundaries is usually determined by identifying all the distinct roadway segments in the area, estimating the number of vehicles per day using each segment (one way trips), multiplying the roadway lengths by their respective traffic volumes, and summing the VKT (VMT) of the individual segments. To provide a check on this estimate or an alternate estimate, gasoline consumption by vehicles in the plant area can be multiplied by an average fuel mileage rate for

the plant's vehicle mix to obtain VKT (VMT). A third method of estimating VMT is from the vehicle-hours of operation and average miles of travel per hour.

Characterization of Fugitive Emissions - The chemical or mineral composition of road dust is a function of the predominant types of material deposited on the surface of paved roads and a function of the type of gravel or surfacing material used on unpaved roads. Typical particle size ranges for the emissions are:[1]

Size range	Percent by weight of emissions	
	Paved roads	Unpaved roads
< 3 μm	40	31
3-30 μm	37	29
> 30 μm	23	40

Available data indicate that surface material on roads generally has a low moisture content, in the range of 0.5 to 4 percent, and that it dries rapidly after precipitation in warm weather.

Control Technology - Available procedures for reducing emissions from plant roads and their estimated efficiencies are summarized below:[6]

Emission points	Control procedures	Efficiency
Paved streets	Street cleaning	No estimate
	Housecleaning programs to reduce deposition of material on streets	No estimate
	Speed reduction	Variable
Unpaved roads	Paving	85%
	Chemical stabilization	50%
	Watering	50%
	Speed reduction	Variable
	Oiling and double chip surface	85%
Road shoulders	Stabilization	80%

Paved streets and roads in a plant area can be cleaned on a frequent schedule to reduce the amount of particulate material on the surface that is available for reentrainment. Preliminary data from field tests indicate that flushers and vacuum-type motorized street cleaners are both quite effective in removing surface material and thereby reducing emission rates from vehicles using the cleaned streets. Because raw material accumulates rapidly on the streets, the overall effectiveness of a street cleaning measure is a function of the frequency of cleaning and the removal efficiency of the equipment.

For plants with small amounts of paved roads, industrial vacuum sweepers or contracted sweeping programs (such as many shopping centers use) would be more appropriate than the larger vacuum street cleaning equipment used on public streets. Mechanical broom sweepers have been shown to be ineffective from an air pollution control standpoint in that they redistribute material into the active traffic lanes of the streets and they remove almost none of the fine material (less than 43 μm) that is subject to reentrainment.

Many street sweepers depend upon the material being concentrated in the gutter in order to achieve good collection efficiency and therefore cannot be used on streets without curbs and gutters. However, the smaller industrial sweepers are usually designed for use in warehouse and storage areas that are not curbed. A factor which might limit the applicability of street flushers in plants is that unpaved areas adjacent to the streets would be wet by the water spray and then become subject to mud track-out onto the streets by equipment and vehicles driving through these areas.

The initial cost of industrial sweepers is $10,000 to $25,000, while the cost of municipal street cleaners is in the range of $35,000 to $60,000. Annual operating costs for street cleaning in industrial applications have been reported at $22,000; the median 1975 operating cost for municipal street cleaning in 105 cities was $4.40 per km ($7.00 per mi.) of street.[7,8]

Good housekeeping practices include the rapid removal of spills on roadways. Preventative measures include covering of truck beds to prevent windage losses, cleaning of truck tires and undercarriages to reduce mud track-out onto paved roads, and minimizing the pick-up of mud by trucks.

The paving of unpaved roadways is the most permanent of the various types of controls. However, the degree of effectiveness of this technique is highly dependent on prevention of excessive surface dust loading. The initial cost of paving is about $17,400 per km ($28,000/mi).[8]

Watering of unpaved roads is effective only when carried out on a regular basis. The schedule depends on climate, type of surface material, vehicle use and type of vehicles.[8]

Oiling unpaved roads is more effective than watering and needs to be applied less often. However special precautions must always be taken so as not to add to surface water runoff problems. Cost of oiling is estimated at $1,500 per km ($4,500/mi).[8]

REFERENCES FOR SECTION 2.1.3

1. Dunbar, D.R. U.S. Environmental Protection Agency. Office of Air Quality Planning and Standards, Research Triangle Park, North Carolina. Resuspension of Particulate Matter, How Real is the Issue and What is the Recommended Course of Action. February 26, 1976. Draft (Unpublished).

2. Midwest Research Institute. Quantification of Dust Entrainment from Paved Roadways. U.S. Environmental Protection Agency, Office of Air Quality Planning and Standards. Research Triangle Park, North Carolina. Prepared under Contract No. 68-02-1403, Task Order No. 7. March 31, 1976.

3. Compilation of Air Pollutant Emission Factors, Supplement No. 5. U.S. Environmental Protection Agency, Office of Air and Waste Management and Office of Air Quality Planning and Standards. Research Triangle Park, North Carolina. December, 1975.

4. PEDCo-Environmental Specialists, Inc. Evaluation of Fugitive Dust Emissions from Mining, Task 1 Report Identification of Fugitive Dust Sources Associated with Mining. U.S. Environmental Protection Agency. Industrial Environmental Research Laboratory, Resource Extraction and Handling Division, Cincinnati, Ohio. Prepared under Contract No. 68-02-1321, Task Order No. 36. April, 1976.

5. Nevada Particulate Control Study for Air Quality Maintenance Areas. Task B Report, Factors Influencing Emissions from Fugitive Sources. PEDCo-Environmental Specialists, Inc., Cincinnati, Ohio. Prepared under Contract No. 68-02-1375, Task Order No. 29. 1976.

6. Jutze, G. and K. Axetell. Investigation of Fugitive Dust Volume I - Sources, Emissions, and Control. PEDCo-Environmental Specialists, Inc., Cincinnati, Ohio. Prepared under Contract No. 68-02-0044, Task Order No. 9. June, 1974.

7. American Public Works Association. 1975 Survey of Practices on Street Cleaning. Chicago, Illinois. 1976 (Unpublished).

8. Fugitive Emissions Control Technology for Integrated Iron and Steel Plants. Draft. Midwest Research Institute. Prepared for U.S. Environmental Protection Agency, Industrial Environmental Research Laboratory. Contract No. 68-02-2120. Research Triangle Park, North Carolina. January 17, 1977.

2.1.4 Storage Piles

Description - Open or partially enclosed storage piles are often used for bulk materials not affected by precipitation or slight contamination, such as coal, sand, gravel, clay, and gypsum. The material may be stored for a short time with a high turnover rate to accommodate surges in daily or weekly rates of sequential processes, or may provide a long-term reserve for emergency supply or to meet cyclical seasonal demands.

Most dust arises from stockpile areas as the material is dumped from the conveyor or chute onto the pile and as bulldozers move the pile. During periods with high wind speeds [greater than about 6 m/sec (13 mph)] or low moisture, wind erosion of a non-weathered surface may also cause emissions.

Emission Ranges - Fugitive dust emissions from the storage area occur as a result of several activities. According to sampling data compiled and evaluated by Midwest Research Institute,[1] the four major emission-producing activities and their approximate relative contributions for crushed rock storage are:

Loading onto piles	12%
Equipment and vehicle movement in storage area	40%
Wind erosion	33%
Loadout from piles	15%

Although the percentage contributions from these activities may vary for storage of different materials or for specific storage area configurations, the same activities are probably the major dust sources for all types of open storage.

Emission rates are dependent on the turnover rate for a pile, methods for adding and removing material, and the pile configuration. Also, the amount of wind erosion affects emission rates. Typical values for a wide range of open storage operations are summarized below:

Activity rating	Emission factor[a]			
	By area		By mass	
	gm/1000 m^2 of storage/day	lb/acre of storage/day	kg/Mg placed in storage	lb/ton placed in storage
Active[b]	1.48	13.2	0.21	0.42
Inactive (wind erosion only)	0.39	3.5	0.055	0.11
Normal mix[c]	1.17	10.4	0.165	0.33

[a] Reliability rating of D.

[b] Eight to 12 hours of activity per 24-hour period.

[c] Five active days per week.

A correction factor is used to vary emission rates from storage piles in different geographic areas: $1/(PE/100)^2$, where PE is the annual precipitation-evaporation (PE) index. A national map showing PE values for all parts of the country is shown in Figure 2-1. The PE index is an approximate measure of average surface moisture.

The recent development of correction factors has lead to refinement of these emission factors. These correction factors account for such parameters as activity on and around storage piles, silt content of material stockpiled and, duration of storage.[3] Table 2-6 presents a listing of emission factor formulas and explanations of correction factors and their use. Note that these formulas are preliminary

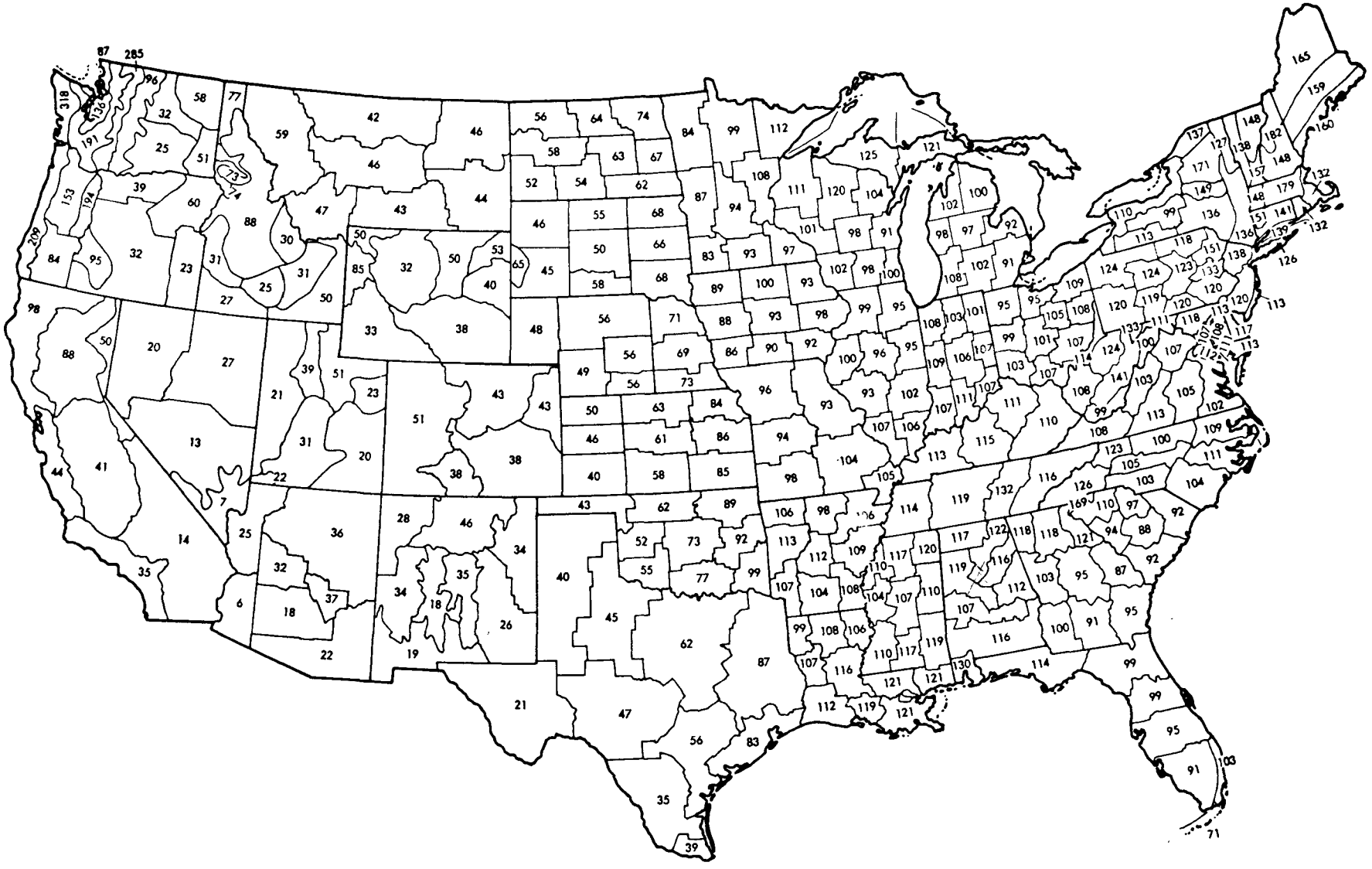

Figure 2-1. Map of Thornthwaite's precipitation-evaporation index values for state climatic divisions.[4]

Table 2-6. STORAGE PILE FUGITIVE EMISSION FACTOR FORMULAS[3]

Operation	Emission factor formulas[a]	
	kg/Mg	lb/ton
Loading onto piles = EF_1[b]	$\frac{(0.02)(K_1)(S/1.5)}{(PE/100)^2}$	$\frac{(0.04)(K_1)(S/1.5)}{(PE/100)^2}$
Vehicular traffic = EF_2 (around storage pile)	$\frac{(0.065)(K_2)(S/1.5)}{(PE/100)^2}$	$\frac{(0.13)(K_2)(S/1.5)}{(PE/100)^2}$
Loading out = EF_3	$\frac{(0.025)(K_3)(S/1.5)}{(PE/100)^2}$	$\frac{(0.05)(K_3)(S/1.5)}{(PE/100)^2}$
Wind erosion = EF_4	$\frac{(0.055)(S/1.5)}{(PE/100)^2} \frac{D}{90}$	$\frac{(0.11)(S/1.5)}{(PE/100)^2} \frac{D}{90}$

[a] Reliability rating of D.

[b] Thornthwaite's precipitation-evaporation index (PE) to be applied only to ore bedding piles.

where:

EF_1 = Emission factor per unit weight of material transferred.

EF_2 = Emission factor per unit weight of material stored.

EF_3 = Emission factor per unit weight of material transferred.

EF_4 = Emission factor per unit weight of material stored.

$K_{1,2,3}$ = Activity factor (see following discussion)

PE = Thornthwaite's precipitation-evaporation index.

S = Silt (<75 μm (200 mesh)) content of the aggregate material (percent).

D = Duration of material in storage (days).

and therefore subject to further refinement and change when test results become available.

The activity factors ($K_{1,2,3}$) developed for the above formulas are all relative to the operations being performed with a front-end loader. Thus if the device being used to load onto piles, such as a stacker loader, appears to generate less fugitive emissions, than would be generated by a front-end loader, an activity factor K_1 of 0.75 would be chosen. This (K_1 = 0.75) indicates that a stacker loader generates only 75 percent of the emissions that a front-end loader, would if performing the same function. The same is also true for K factors for vehicular traffic around storage piles and loadout of storage piles. For example, if a clam shell is being used to load out a storage pile and appears to generate only 50 percent of the fugitive emissions that a front-end loader would, then a K factor of 0.5 could be applied.

Examples of correction factors which have been developed at example iron and steel plants are presented in Table 2-7.[3] It must be remembered that these correction factors are site specific and thus will vary from plant to plant and industry to industry. These values are presented for illustrative purposes only; caution should be used when applying factors for specific plants without studying the activity levels and silt contents at that plant.

Inventory Techniques - Either the annual throughput rate or the acreage of each storage operation should be determined along with the silt content and activity factors. The appropriate emission factor should be corrected to reflect local climatic conditions.

Table 2-7. EXAMPLE CORRECTION FACTORS FOR STORAGE PILE EMISSION FORMULAS[3]

Material in storage	Silt content(s) (in percent)	Activity factor			Duration of storage (days)
		K_1 (loading)	K_2 (traffic)	K_3 (loadout)	
Coal	2[a] - 6[b]	0.75	0.5	0.75[a] - 0.8[b]	30
Iron ore pellets	13	0.75	0.09	1.0	30
Lump iron ore	9	0.75	-	0.75	30
Coke	1	0.85	0.40	1.0 - 0.85	surge pile
Slag	1.5	1.00	1.00	1.0	30
Ore bedding	15	1.00	0.5	1.0	-

[a] Medium volatility coal.

[b] High volatility coal.

Characterization of Fugitive Emissions - Emissions from the storage pile would be the same chemically as the materials in the pile. However, the size distribution of emissions is somewhat independent of the material, since only the fines (less than 100 μm) become airborne. Typical particle size ranges for the emissions are:[2]

Size range	Percent by weight of emissions
<3 μm	30
3-30 μm	23
>30 μm	47

Control Technology - Possible control technology applications for open storage piles are:

Emission points	Control procedures	Efficiency, percent
Loading onto piles	Enclosure[a]	70-99
	Chemical wetting agents or foam[b]	80-90
	Adjustable chutes	75
Movement of pile	Enclosure	95-99
	Chemical wetting agents	90
	Watering	50
	Traveling booms to distribute material	no estimate
Wind erosion	Enclosure	95-99
	Wind screens	very low
	Chemical wetting agents or foam	90
	Screening of material prior to storage, with fines sent directly to processing or to a storage silo	no estimate

TECHNICAL REPORT DATA
(Please read Instructions on the reverse before completing)

1. REPORT NO. EPA-450/3-77-010	2.	3. RECIPIENT'S ACCESSION NO.
4. TITLE AND SUBTITLE Technical Guidance for Control of Industrial Process Fugitive Particulate Emissions		5. REPORT DATE Issued March 1977
		6. PERFORMING ORGANIZATION CODE
7. AUTHOR(S) George A. Jutze, John M. Zoller, Thomas A. Janszen, Robert S. Amick, Charles E. Zimmer, & Richard W. Gerstle		8. PERFORMING ORGANIZATION REPORT NO. 3155-GG
9. PERFORMING ORGANIZATION NAME AND ADDRESS PEDCo Environmental, Inc. Chester Towers, 11499 Chester Rd. Cincinnati, Ohio 45246		10. PROGRAM ELEMENT NO.
		11. CONTRACT/GRANT NO. 68-02-1375 Task 33
12. SPONSORING AGENCY NAME AND ADDRESS U.S. Environmental Protection Agency Office of Air Quality Planning and Standards Research Triangle Park, NC 27711		13. TYPE OF REPORT AND PERIOD COVERED Final
		14. SPONSORING AGENCY CODE

15. SUPPLEMENTARY NOTES

U.S. EPA Project Officer - Gilbert H. Wood, Emission Standards and Engineering Division

16. ABSTRACT

This document provides guidance for evaluating "Industrial Process Fugitive Particulate Emission" (IPFPE) sources in light of upcoming revisions to State Implementation Plans. For 24 selected industrial categories, IPFPE data are presented on identification of sources; emission estimates; example plant inventory; emission characteristics; control technology options; and a list of pertinent references. The references compiled for each industry is the result of an extensive literature search.

Control technologies, including selection of control techniques, IPFPE capture and control options, and removal equipment are presented. Techniques are developed to estimate impact of IPFPE sources on air quality. Evaluation of short-term localized impact using dispersion modeling and field measurements (upwind/downwind sampling) is discussed. In addition, state-of-the-art measurement techniques for IPFPE's are identified.

Integration of IPFPE impacts into the State Implementation Planning process is also covered. Procedures for development of control strategies for IPFPE sources are presented along with factors which influence the IPFPE planning process. The document summarizes existing regulations applicable to IPFPE sources, model regulation for IPFPE sources, and an evaluation of enforcement procedures.

17. KEY WORDS AND DOCUMENT ANALYSIS

a. DESCRIPTORS	b. IDENTIFIERS/OPEN ENDED TERMS	c. COSATI Field/Group
Air Pollution Control	Dispersion Modeling State Implementation Plans	13B
Dust	Fugitive Dust, Particle Size	11G
Industrial Processes	Airborne Wastes	13H

18. DISTRIBUTION STATEMENT Unlimited. Available from National Technical Information Service, 5285 Port Royal Road, Springfield, Virginia 22161	19. SECURITY CLASS (This Report) Unclassified	21. NO. OF PAGES 530
	20. SECURITY CLASS (This page) Unclassified	22. PRICE

EPA Form 2220-1 (9-73)

☆U.S. GOVERNMENT PRINTING OFFICE: 1977-740-110/309 REGION NO. 4

REFERENCES FOR APPENDIX D

1. Technical Manual for the Measurement of Fugitive Emissions: Upwind-Downwind Sampling Method for Industrial Fugitive Emissions. Industrial Environmental Research Laboratory, U.S. Environmental Protection Agency, Research Triangle Park, North Carolina. April 1976. Publication No. EPA-600/2-76-089a.

upwind site and from the nearest weather observation station may provide some indication as to the extent changing weather conditions are responsible for the day-to-day variations in the plant impact.

The upwind/downwind sampling program provides an indication of the total plant impact - conventional point sources as well as IPFPE sources. In order to determine the impact of only the IPFPE sources, it is necessary to subtract the impact of the conventional point sources. An estimate of the contribution of the conventional point sources under the meteorological conditions that occurred during a given sampling interval may be determined by the application of a dispersion model.

Tasks	Personnel - Man-hours			
	Project Manager	Chemist	Sr. Tech.	Tech.
Preparation of project plan	16			
Preparation of monitoring equipment			20	20
Preparation of filter media		2		6
Initial field set up and checkout			8	16
Field monitoring program			80	160
Data reduction and analyses	4	8	20	80
Quality assurance program		4	8	
Preparation of first draft reports	20	10	10	20
Preparation of final reports	8	4		4
Total man-hours	48	28	146	306

Figure 4. Staffing and manpower allocation.

RESPONSIBILITY

This sampling program will require the efforts of five people: a project manager, chemist, senior field technician, and two field technicians. Their responsibilities and projected level of effort relative to the various tasks involved for this test series are presented in Figure 4.

ANALYSIS OF RESULTING DATA

The field sampling program will provide a comparison of upwind and downwind concentrations of ambient suspended particulates. Depending upon the occurrence of winds from the west, such data should be available for up to 10 days. The Texas Air Control Board stipulates in its regulation that to be statistically significant, the minimum difference between upwind and downwind concentrations should be as follows:

Sample duration, hours	Minimum difference for statistical significance, $\mu g/m^3$
1	400
3	200
5	100

It is expected that the difference between upwind and downwind concentrations will vary from day to day. Based upon the Texas regulation, and depending on the occurence of wind from the west, it is likely that the plant impact may be determined to be signficant on several days during the sampling period. The day-to-day variation in the difference between upwind and downwind concentrations may be related to plant operations and/or meteorological conditions. Thus, it is important to make a determination as to whether or not differences in plant operations are sufficient to cause significant differences in particulate emission rates. Further, an analysis of meteorological data collected at the

field test in the series. Eight specific activities are defined over a projected 9-hour test period.

METHOD OF ANALYSES AND DATA REPORTING

The suspended particulate loading will be determined according to the method described in the Code of Federal Regulations 40, part 50.11, Appendix B, July 1, 1975, pages 12 through 16. The particulate material on the exposed filter will be equilibrated under the same temperature and humidity conditions as experienced in weighing the unexposed filters. The weight of the particulate material collected on exposed filters will be determined gravimetrically. The calculated TSP concentration is based on the net weight of collected particulate and the sample air volume corrected to standard conditions (760 mm Hg and 25°C). The suspended particulate data will be reported on a separate data sheet for each test in the series. This data sheet will include the following information:

- Date/time of sampling
- Test series identification
- Identification of the specific location of each sampler
- TSP concentration expressed in $\mu g/m^3$.

In addition, the meteorological data for the specific study period will be reduced and reported in SAROAD format.

Quality control procedures to be followed throughout this test series are consistent with those defined in "Quality Control Practices in Processing Air Pollution Samples," U.S. Environmental Protection Agency Publication No. APTD-1132, and are on file in the agency office. After all data have been reduced to SAROAD format, an independent audit will be performed on 7 percent of all values reported.

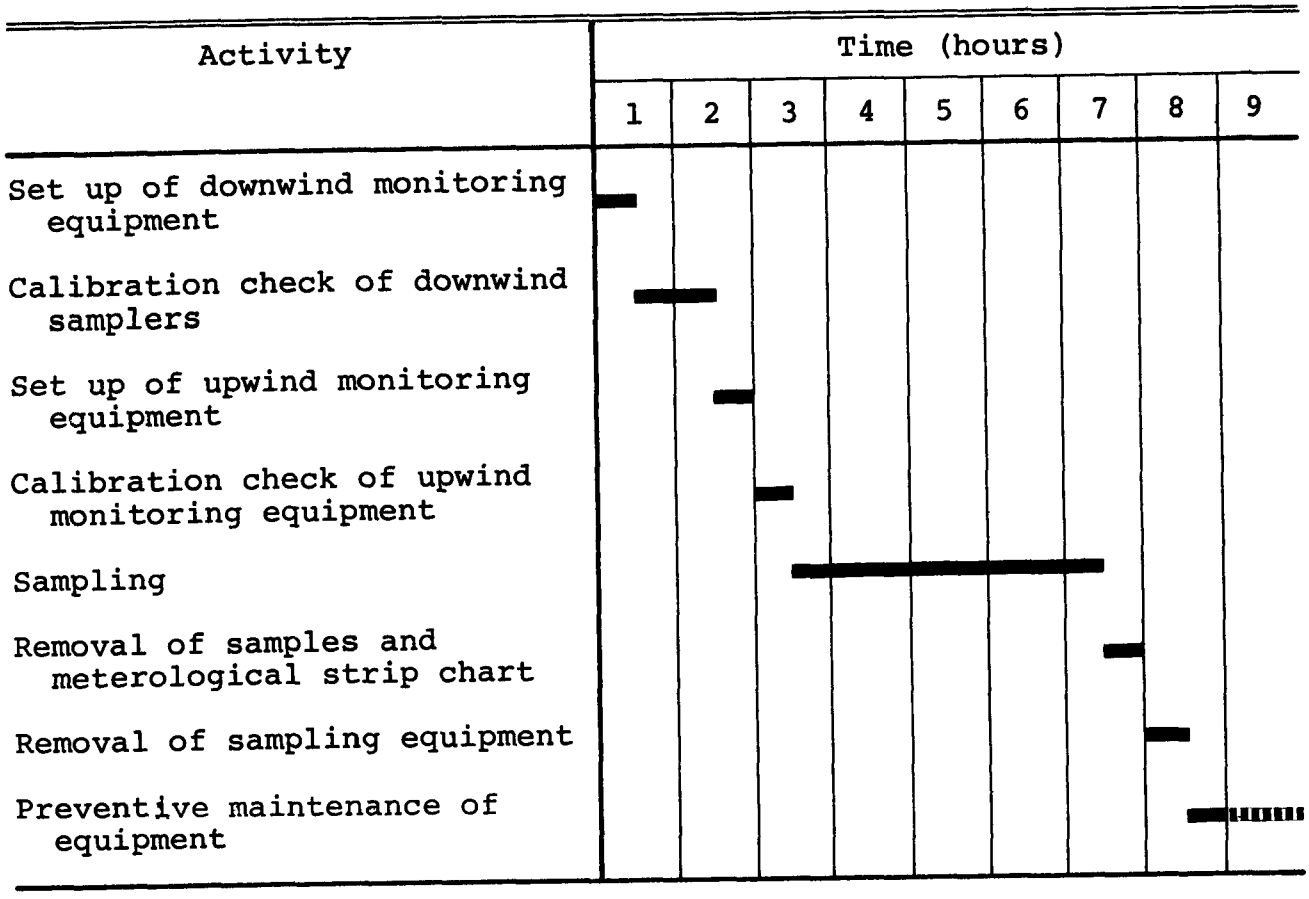

Figure 3. Field test schedule.

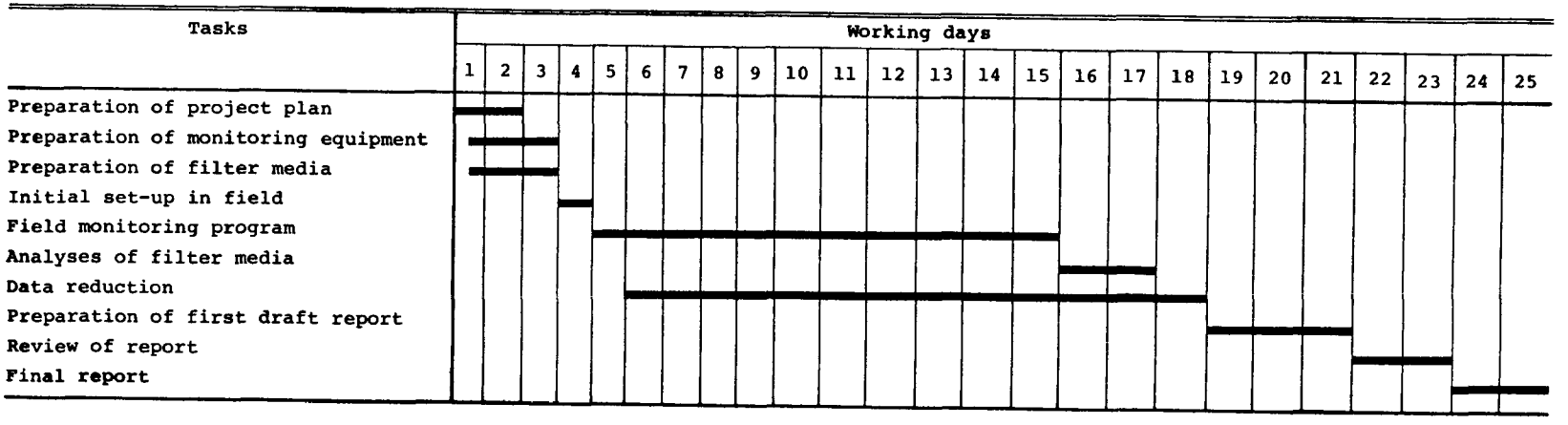

Figure 2. Test program schedule.

1) Two 3-KVA, 5-hp gasoline
2) One 1.5-KVA, 3-hp gasoline

- Sampling van with covered bed

- Power extension cords; five 100-ft cords of No. 12 wire with ground and exterior duplex receptacles, two 50-ft cords of No. 14 wire with ground, and exterior extension cords

- Preweighed fiberglass filter media consisting of 100 filters, folders, envelopes, and data sheets

- Three portable citizen-band radios

Facilities Required

The major facility used for this program is an analytical laboratory equipped with a weighing room with constant temperature and humidity and an analytical balance. The weighing room must maintain a constant humidity in the range of 30 to 50 percent with a maximum deviation of ±2 percent RH and a temperature controlled to ±1°C in the range of 20 to 25°C. The analytical balance must be able to reproduce within ±0.5 mg for Class S weights and ±3 mg for unexposed equilibrated filters and ±5 mg for exposed equilibrated filters.

SCHEDULES

The entire test program schedule is presented in Figure 2. Ten specific tasks are defined and programmed over an anticipated period of performance of 25 days. This schedule allows ten working days for field monitoring. However, this period may turn out to be much shorter if the desired meteorological conditions are observed relatively early in the program. Also, the desired conditions may not be observed at all and therefore the time period may have to be extended. Additionally, Figure 3 presents an activity schedule to be used by the supervisory field technician in conducting each

Monitoring Instrumentation

The two basic measurements required for the successful completion of this task are the measurement of wind speed/direction and the total suspended particulates in the ambient air.

Meteorological Monitoring - Wind speed and direction will be monitored using a Bendix Aerovane meteorological system, complete with recorder and tripod.

This equipment is described as follows:

- Bendix Aerovane Transmitter Model 120 with six bladed rotor
- Bendix Aerovane Recorder Model 144 with wind speed range of 0 to 100 mi/hr and wind direction range of 360 degrees
- Aerovane Transmitter Support (14.5 feet high)
- Cable, Seven-Conductor (50 feet)
- Mast Adaptor for Mounting Transmitter

Total Suspended Particulate Monitoring - Total suspended particulates will be collected with a high-volume air sampler, as described in the Code of Federal Regulation 40, Part 50.11, Appendix B, July 1, 1975, Pages 12 through 16.

Specifically, five samplers are required, which will be equipped with the following alternative equipment:

- Dixon flow recorders
- Running time meters
- Quick-change filter cartridges

Monitoring Support Equipment

Support equipment to be used is listed below:

- High-volume air sampler calibration kit
- Three motor generators:

is required for conventional and fugitive particulate sources.

INSTRUMENTATION, EQUIPMENT, AND FACILITIES REQUIRED

The upwind/downwind monitor configuration will consist of a monitoring site at the upwind plant fence line, including one high-volume air sampler and a recording meteorological system. On the downwind side of the source, near the property line, four high-volume air samplers will be located parallel to the fence line at intervals of 61 meters (200 ft). The upwind site will employ a small generator to power the single sampler and the meterological station; the other sites will require two larger motor generators for electrical power. One generator is necessary for each two downwind samplers. The generator is placed between a pair of samplers with 30 meter (100 ft) power lines to each sampler. Three field technicians will perform the tests, one at each generator location. Whenever the wind direction is verified to be generally from the west (270 degrees $\pm$ about 20 degrees), the technician at the meterological control site will contact the other technicians via radio and initiate sampling. Each sampling period should be as long as practicable, during which the wind direction will be monitored to determine whether it persists from the desired directional sector. A decrease in flow rates of more than 10 percent on the downwind samplers indicates that sufficient sample has been collected, and the test period will be terminated. The above program will be repeated several times with the objective of observing optimum conditions of speed and directional persistence of the wind. Also, it is hoped that various source operational conditions will be observed.

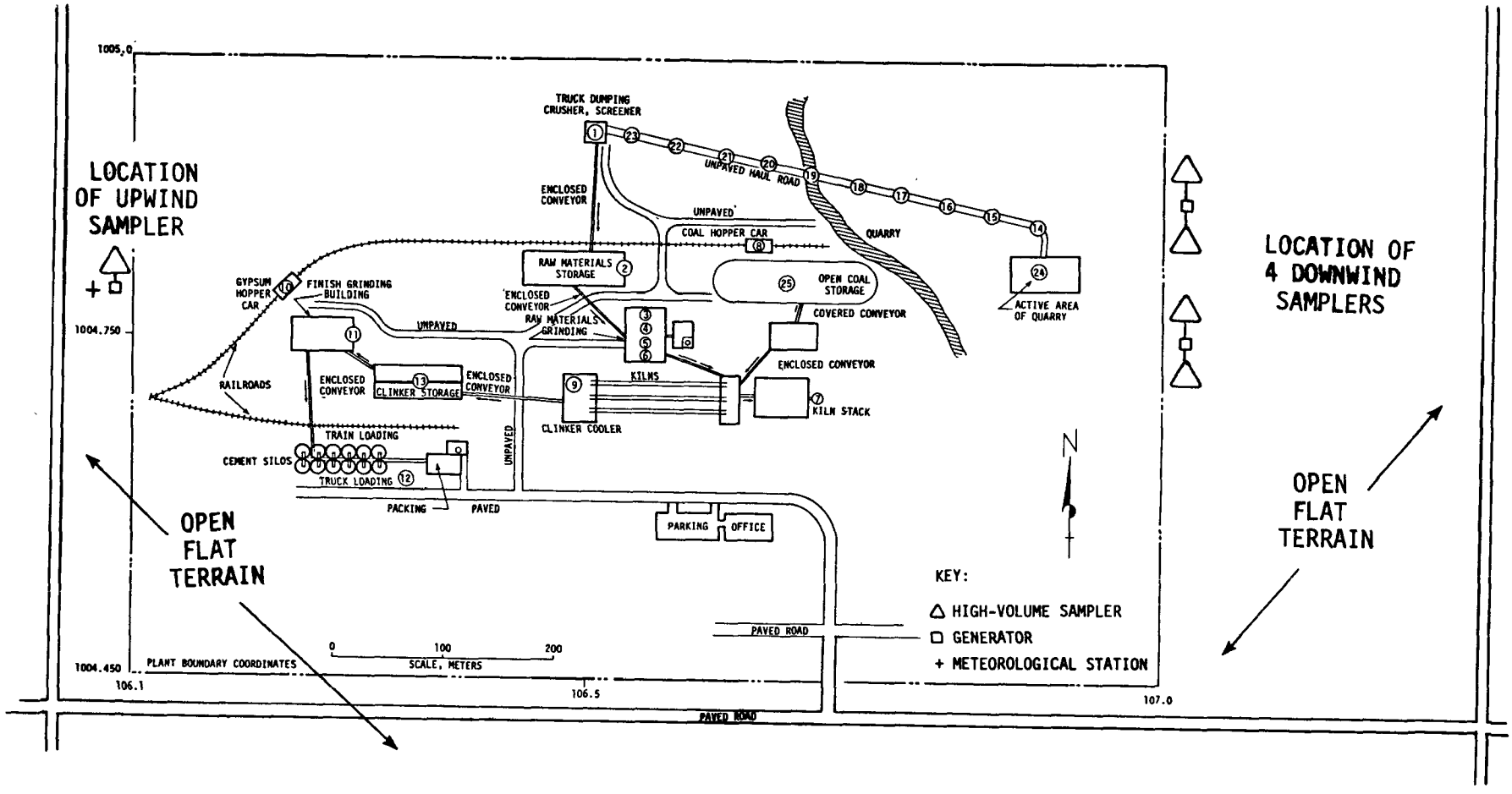

Figure 1. Upwind/downwind sampler locations for cement plant.

ducted to estimate the impact of fugitive particulate emissions from the ABC Portland Cement plant on ambient air quality at locations adjacent to the plant property.

GENERAL TEST APPROACH

The visual observation of uncontrolled and/or fugitive particulate emission sources at the ABC Portland Cement plant indicates that the following sources are probably responsible for causing the major air quality impact on adjoining private property:

- Raw materials storage
- Clinker storage roof monitors
- Quarry activities

The approach presented in this example is idealized in that only minor constraints have been placed on the resources and time allocated. In actual application, practical considerations may well dictate or permit reductions in both resources (personnel and equipment) and sampling period. Based on the plant configuration (Figure 1), and the frequency distribution of wind directions in the area, a single high-volume sampler will be positioned west (upwind) of the plant fence line and four samplers along the east (downwind) fence line. Figure 1 depicts the proximate location of these samplers, as well as the physical plant layout, location of paved roads, and local topographic features.

Sampling periods will be selected so as to be representative of both routine and maximum operating conditions if at all possible. ABC plant management has agreed to keep a record of in-plant operating activity during the periods selected for sampling. By correlating the measured particulate levels with source-related activities, the agency will be able to determine if and where emissions reduction/control

APPENDIX D

EXAMPLE UPWIND/DOWNWIND TEST PLAN (FOR HYPOTHETICAL CEMENT PLANT)

BACKGROUND

The ABC Corporation operates a Portland Cement plant at 11555 Portland Highway. This facility produces Portland Cement Clinker with a dry process. The product material is stored in silos for eventual transfer to other corporate facilities producing precast components for construction purposes. Production was started at this facility in June 1975, and since that date the local air pollution control agency has investigated 14 citizen complaints dealing with alleged damage/soiling of private property caused by excessive emissions of particulate matter from plant operations, materials storage, and quarrying. Additionally, the agency operates an air quality monitoring station approximately 0.8 kilometer due east of this facility. Evaluation of total suspended particulate (TSP) measurement data from this location (Site No. 017-11) indicates the following:

(a) Both the annual geometric mean and maximum 24-hour levels of TSP are projected to exceed their respective NAAQS levels.

(b) Both microscopic and chemical analyses of the materials collected on the high-volume sampler filters indicate the presence of considerable quantities of particulate matter characteristically emitted from fugitive particulate sources associated with Portlant Cement production.

Therefore, a series of measurements obtained by the upwind/downwind technique, as described in "Technical Manual for Measurement of Fugitive Emissions: Upwind/Downwind Sampling Method for Industrial Emissions,"[1] will be con-

APPENDIX D

EXAMPLE UPWIND/DOWNWIND TEST PLAN

(FOR HYPOTHETICAL CEMENT PLANT)

```
      430 A4 = 2./EXP(C6)                                    RCX1 69 00
      480 IF(C8-50.)490,540,540                              RCX1 70 00
      490 A6 = 2./EXP(C8)                                    RCX1 71 00
      540 T = A4 + A6                                        RCX1 72 00
          SUM = SUM + T                                      RCX1 73 00
          IF(T-0.01)550,420,420                              RCX1 74 00
      550 RC = A1 * (A2 + SUM)                               RCX1 75 00
          M = 4                                              RCX1 76 00
          RETURN                                             RCX1 77 00
          END                                                RCX1 78 00
```

[redacted]. DBTSIG

```
      A3 = 0.                                                           RCX1 12 00
      CA = Z-H                                                          RCX1 13 00
      CB = Z+H                                                          RCX1 14 00
      C3 = CA*CA/C2                                                     RCX1 15 00
      C4 = CB*CB/C2                                                     RCX1 16 00
      IF (C3-50.)60,80,80                                               RCX1 17 00
   60 A2=1./EXP(C3)                                                     RCX1 18 00
   80 IF(C4-50.)90,110,110                                              RCX1 19 00
   90 A3=1./EXP(C4)                                                     RCX1 20 00
  110 SUM=0.                                                            RCX1 21 00
      THL = 2.* HL                                                      RCX1 22 00
  120 AN=AN+1.                                                          RCX1 23 00
      A4 = 0.                                                           RCX1 24 00
      A5 = 0.                                                           RCX1 25 00
      A6 = 0.                                                           RCX1 26 00
      A7 = 0.                                                           RCX1 27 00
      C5 = AN*THL                                                       RCX1 28 00
      CC = CA-C5                                                        RCX1 29 00
      CD = CB-C5                                                        RCX1 30 00
      CE = CA+C5                                                        RCX1 31 00
      CF = CB+C5                                                        RCX1 32 00
      C6 = CC*CC/C2                                                     RCX1 33 00
      C7 = CD*CD/C2                                                     RCX1 34 00
      C8 = CE*CE/C2                                                     RCX1 35 00
      C9 = CF*CF/C2                                                     RCX1 36 00
      IF(C6-50.)130,150,150                                             RCX1 37 00
  130 A4=1./EXP(C6)                                                     RCX1 38 00
  150 IF(C7-50.)160,180,180                                             RCX1 39 00
  160 A5=1./EXP(C7)                                                     RCX1 40 00
  180 IF(C8-50.)190,210,210                                             RCX1 41 00
  190 A6=1./EXP(C8)                                                     RCX1 42 00
  210 IF(C9-50.)220,240,240                                             RCX1 43 00
  220 A7=1./EXP(C9)                                                     RCX1 44 00
  240 T=A4+A5+A6+A7                                                     RCX1 45 00
      SUM=SUM+T                                                         RCX1 46 00
      IF (T-0.01)250,120,120                                            RCX1 47 00
  250 RC=A1*(A2+A3+SUM)                                                 RCX1 48 00
      M = 5                                                             RCX1 49 00
      RETURN                                                            RCX1 50 00
C         CALCULATE MULTIPLE EDDY REFLECTIONS FOR GROUND LEVEL RECEPTOR HRCX1 51 00
  340 A1 = 1./(6.28318*U*SY*SZ*C1)                                      RCX1 52 00
      A2 = 0.                                                           RCX1 53 00
      C2 = 2.*SZ*SZ                                                     RCX1 54 00
      C3 = H*H/C2                                                       RCX1 55 00
      IF(C3-50.)360,410,410                                             RCX1 56 00
  360 A2 = 2./EXP(C3)                                                   RCX1 57 00
  410 SUM = 0.                                                          RCX1 58 00
      THL = 2. * HL                                                     RCX1 59 00
  420 AN = AN + 1.                                                      RCX1 60 00
      A4 = 0.                                                           RCX1 61 00
      A6 = 0.                                                           RCX1 62 00
      C5 = AN*THL                                                       RCX1 63 00
      CC = H-C5                                                         RCX1 64 00
      CE = H + C5                                                       RCX1 65 00
      C6 = CC*CC/C2                                                     RCX1 66 00
      C8 = CE*CE/C2                                                     RCX1 67 00
      IF(C6-50.)430,480,480                                             RCX1 68 00
```

```
      C1 = 1.                                                           RCX0 55 00
      IF (Y)5,400,5                                                     RCX0 56 00
    5 YD = 1000. * Y                                                    RCX0 57 00
C        YD IS CROSSWIND DISTANCE IN METERS.                            RCX0 58 00
      DUM = YD/SY                                                       RCX0 59 00
      TEMP = 0.5*DUM*DUM                                                RCX0 60 00
      IF (TEMP-50.)6,30,30                                              RCX0 61 00
    6 C1 = EXP(TEMP)                                                    RCX0 62 00
  400 IF(KST-4)401,401,403                                              RCX0 63 00
  401 IF(HL-5000.)7,403,403                                             RCX0 64 00
C        IF STABLE CONDITION OR UNLIMITED MIXING HEIGHT,                RCX0 65 00
C         USE EQUATION 3.2 IF Z = 0, OR EQ 3.1 FOR NON-ZERO Z.          RCX0 66 00
  403 C2 = 2.*SZ*SZ                                                     RCX0 67 00
      IF(Z)30,404,406                                                   RCX0 68 00
  404 C3 = H*H/C2                                                       RCX0 69 00
      IF(C3-50.)405,30,30                                               RCX0 70 00
  405 A2 = 1./EXP(C3)                                                   RCX0 71 00
C        MADE EQUATION 3.2.                                             RCX0 72 00
      RC = A2/(3.14159*U*SY*SZ*C1)                                      RCX0 73 00
      M = 1                                                             RCX0 74 00
      RETURN                                                            RCX0 75 00
  406 A2 = 0.                                                           RCX0 76 00
      A3 = 0.                                                           RCX0 77 00
      CA = Z-H                                                          RCX0 78 00
      CB = Z+H                                                          RCX0 79 00
      C3 = CA*CA/C2                                                     RCX0 80 00
      C4 = CB*CB/C2                                                     RCX0 81 00
      IF(C3-50.)407,408,408                                             RCX0 82 00
  407 A2 = 1./EXP(C3)                                                   RCX0 83 00
  408 IF(C4-50.)409,411,411                                             RCX0 84 00
  409 A3 = 1./EXP(C4)                                                   RCX0 85 00
C        MADE EQUATION 3.1.                                             RCX0 86 00
  411 RC = (A2 + A3)/(6.28318*U*SY*SZ*C1)                               RCX0 87 00
      M = 2                                                             RCX0 88 00
      RETURN                                                            RCX0 89 00
C        IF SIGMA-Z IS GREATER THAN 1.6 TIMES THE MIXING HEIGHT,        RCX0 90 00
C         THE DISTRIBUTION BELOW THE MIXING HEIGHT IS UNIFORM WITH      RCX0 91 00
C         HEIGHT REGARDLESS OF SOURCE HEIGHT.                           RCX0 92 00
    7 IF(SZ/HL - 1.6)9,9,8                                              RCX0 93 00
C        MADE EQUATION 3.5.                                             RCX0 94 00
    8 RC = 1./(2.5066*U*SY*HL*C1)                                       RCX0 95 00
      M = 3                                                             RCX0 96 00
      RETURN                                                            RCX0 97 00
C        INITIAL VALUE OF AN SET = 0.                                   RCX0 98 00
    9 AN = 0.                                                           RCX0 99 00
      IF (Z) 30,340,40                                                  RCX1 00 00
C        STATEMENTS 40 TO 250 CALCULATE RC, THE RELATIVE CONCENTRATION, RCX1 01 00
C         USING THE EQUATION DISCUSSED ABOVE.  SEVERAL INTERMEDIATE     RCX1 02 00
C         VARIABLES ARE USED TO AVOID REPEATING CALCULATIONS.           RCX1 03 00
C         CHECKS ARE MADE TO BE SURE THAT THE ARGUMENT OF THE           RCX1 04 00
C         EXPONENTIAL FUNCTION IS NEVER GREATER THAN 50 (OR LESS THAN   RCX1 05 00
C         -50).  IF 'AN' BECOMES GREATER THAN 45, A LINE OF OUTPUT IS   RCX1 06 00
C         PRINTED INFORMING OF THIS.                                    RCX1 07 00
C        CALCULATE MULTIPLE EDDY REFLECTIONS FOR RECEPTOR HEIGHT Z.     RCX1 08 00
   40 A1 = 1./(6.28318*U*SY*SZ*C1)                                      RCX1 09 00
      C2 = 2.*SZ*SZ                                                     RCX1 10 00
      A2 = 0.                                                           RCX1 11 00
```

```
[redacted].DBTRCX
      SUBROUTINE DBTRCX (U,Z,H,HL,X,XY,Y,KST,AN,M,SY,SZ,RC,SYN,SZN)
C     THIS IS THE 1972 VERSION OF DBTRCX.                                RCX0 02 00
C     D. B. TURNER, RESEARCH METEOROLOGIST, MODEL DEVELOPMENT BRANCH,    RCX0 03 00
C      DIVISION OF METEOROLOGY, ENVIRONMENTAL PROTECTION AGENCY.         RCX0 04 00
C        ROOM 314B, NCHS BUILDING, RTP, PHONE (919) 549-8411 EXT 4564    RCX0 05 00
C      MAILING ADDRESS- DM, EPA, RESEARCH TRIANGLE PARK, NC 27711        RCX0 06 00
C      * ON ASSIGNMENT FROM NATIONAL OCEANIC AND ATMOSPHERIC             RCX0 07 00
C              ADMINISTRATION, DEPARTMENT OF COMMERCE.                   RCX0 08 00
C     SUBROUTINE DBTRCX CALCULATES CHI/Q CONCENTRATION VALUES, DBTRCX    RCX0 09 00
C      CALLS UPON SUBROUTINE DBTSIG TO OBTAIN STANDARD DEVIATIONS.       RCX0 10 00
C     THE INPUT VARIABLES ARE....                                        RCX0 11 00
C      U     WIND SPEED (M/SEC)                                          RCX0 12 00
C      Z     RECEPTOR HEIGHT (M)                                         RCX0 13 00
C      H     EFFECTIVE STACK HEIGHT (M)                                  RCX0 14 00
C      HL=L  HEIGHT OF LIMITING LID (M)                                  RCX0 15 00
C      X     DISTANCE RECEPTOR IS DOWNWIND OF SOURCE (KM)                RCX0 16 00
C      XY    X+VIRTUAL DISTANCE USED FOR AREA SOURCE APPROX. (KM)        RCX0 17 00
C      Y     DISTANCE RECEPTOR IS CROSSWIND FROM SOURCE (KM)             RCX0 18 00
C      KST   STABILITY CLASS                                             RCX0 19 00
C     THE OUTPUT VARIABLES ARE....                                       RCX0 20 00
C      AN    THE NUMBER OF TIMES THE SUMMATION TERM IS EVALUATED         RCX0 21 00
C              AND ADDED IN.                                             RCX0 22 00
C      RC    RELATIVE CONCENTRATION (SEC/M**3)                           RCX0 23 00
C     THE FOLLOWING EQUATION IS SOLVED —                                 RCX0 24 00
C       RC = (1/(2*PI*U*SIGMA Y*SIGMA Z))* (EXP(-0.5*(Y/SIGMA Y)**2))    RCX0 25 00
C        (EXP(-0.5*((Z-H)/SIGMA Z)**2) + EXP(-0.5*((Z+H)/SIGMA Z)**2))   RCX0 26 00
C          PLUS THE SUM OF THE FOLLOWING 4 TERMS K TIMES (N=1,K) —       RCX0 27 00
C            TERM 1- EXP(-0.5*((Z-H-2NL)/SIGMA Z)**2)                    RCX0 28 00
C            TERM 2- EXP(-0.5*((Z+H-2NL)/SIGMA Z)**2)                    RCX0 29 00
C            TERM 3- EXP(-0.5*((Z-H+2NL)/SIGMA Z)**2)                    RCX0 30 00
C            TERM 4- EXP(-0.5*((Z+H+2NL)/SIGMA Z)**2)                    RCX0 31 00
C     THE ABOVE EQUATION IS SIMILAR TO EQUATION (5.8) P 36 IN            RCX0 32 00
C      WORKBOOK OF ATMOSPHERIC DISPERSION ESTIMATES WITH THE ADDITION    RCX0 33 00
C      OF THE EXPONENTIAL INVOLVING Y.                                   RCX0 34 00
C     IWRI IS CONTROL CODE FOR OUTPUT                                    RCX0 35 00
      IWRI = 6                                                          RCX0 36 00
C     IF THE SOURCE IS ABOVE THE LID, SET RC = 0., AND RETURN.           RCX0 37 00
      IF (H-HL)302,302,304                                              RCX0 38 00
  302 IF (Z-HL)300,300,30                                               RCX0 39 00
  304 IF (Z-HL)310,306,306                                              RCX0 40 00
  306 WRITE(IWRI, 307)                                                  RCX0 41 00
  307 FORMAT (1H0,'BOTH H AND Z ARE ABOVE THE MIXING HEIGHT SO A RELIABL RCX0 42 00
     1E COMPUTATION CAN NOT BE MADE.')                                  RCX0 43 00
   30 RC=0.                                                             RCX0 44 00
      RETURN                                                            RCX0 45 00
C     IF X IS LESS THAN 1 METER, SET RC=0. AND RETURN. THIS AVOIDS       RCX0 46 00
C      PROBLEMS OF INCORRECT VALUES NEAR THE SOURCE.                     RCX0 47 00
  300 IF (X-0.001)310,310,310                                           RCX0 48 00
C     CALL DBTSIG TO OBTAIN VALUES FOR SY AND SZ                         RCX0 49 00
  310 CALL DBTSIG (X,XY,KST,SY,SZ)                                      RCX0 50 00
C      SY = SIGMA Y, THE STANDARD DEVIATION OF CONCENTRATION IN THE      RCX0 51 00
C      Y-DIRECTION (M)                                                   RCX0 52 00
C      SZ = SIGMA Z, THE STANDARD DEVIATION OF CONCENTRATION IN THE      RCX0 53 00
C      Z-DIRECTION (M)                                                   RCX0 54 00
      SY = SQRT(SY**2 + SYN**2)
      SZ = SQRT(SZ**2 + SZN**2)
```

```
00 02 27   004          MF = 1                                                    MTP2 16 00
00 02 28   004     120  ML = MF + 5                                              MTP2 17 00
00 02 29   004          IF(J-ML)130,140,150                                       MTP2 18 00
00 02 30   004     130  ML = J                                                    MTP2 19 00
00 02 31   004     140  NDUM = 2                                                  MTP2 20 00
00 02 32   004  C          WRITE OUTPUT TABLE OF RESULTING CONCENTRATIONS.        MTP2 21 00
00 02 33   004     600  FORMAT(* * * * R E C E P T O R   N U M B E R * * *)       MTP2 22 00
00 02 34   004     150  IF(LDUM.LT.2) WRITE(IWRI,855)KDUM                        MTP2 23 00
00 02 35   004     855  FORMAT(/' HOUR #',I3)                                    MTP2 24 00
00 02 36   004          WRITE(IWRI,600)                                           MTP2 25 00
00 02 37   004          WRITE(IWRI,856)(JD,JD=MF,ML)                              MTP2 26 00
00 02 38   004     856  FORMAT(' ',4X,6(4X,I6))                                  MTP2 27 00
00 02 39   004  C          WRITE PARTIAL CONCENTRATIONS DEPENDING UPON CONTROL, KNTRL:1,DOMTP2 28 00
00 02 40   004          GO TO (160,180),KNTRL                                     MTP2 29 00
00 02 41   004     160  GOTO(161,162),LDUM                                       MTP2 30 00
00 02 42   004     161  WRITE(IWRI,605)                                          MTP2 31 00
00 02 43   004     605  FORMAT('0 S  HFIN     PARTIAL CONCENTRATIONS (G/M**3)'/)  MTP2 32 00
00 02 44   004          DO 170 ID = 1,I                                           MTP2 33 00
00 02 45   004     170  WRITE(IWRI,610)ID,HFI(ID),(PCON(ID,JD),JD=MF,ML)         MTP2 34 00
00 02 46   004     610  FORMAT(' ',I2,F6.0,2X,1P6E10.3)                          MTP2 35 00
00 02 47   004          GOTO180                                                   MTP2 36 00
00 02 48   004     162  WRITE(IWRI,163)                                          MTP2 37 00
00 02 49   004     163  FORMAT('0 S',10X,'PARTIAL CONCENTRATIONS (G/M**3)'/)     MTP2 38 00
00 02 50   004          DO171ID=1,I                                               MTP2 39 00
00 02 51   004     171  WRITE(IWRI,172)ID,(PCON(ID,JD),JD=MF,ML)                 MTP2 40 00
00 02 52   004     172  FORMAT(' ',I2,8X,1P6E10.3)                               MTP2 41 00
00 02 53   004     180  WRITE(IWRI,615)                                          MTP2 42 00
00 02 54   004     615  FORMAT(1H0,12X,'TOTAL CONCENTRATION (G/M**3)'/)          MTP2 43 00
00 02 55   004          WRITE(IWRI,620)(TCON(JD),JD = MF,ML)                      MTP2 44 00
00 02 56   004     620  FORMAT (' ',10X,1P6E10.3)                                MTP2 45 00
00 02 57   004          GO TO (190,705),NDUM                                      MTP2 46 00
00 02 58   004     190  MF = ML + 1                                              MTP2 47 00
00 02 59   004          GO TO 120                                                 MTP2 48 00
00 02 60   004     705  GO TO (55,60),LDUM                                       MTP2 49 00
00 02 61   004      55  KDUM=KDUM+1                                              MTP2 50 00
00 02 62   004          IF(KDUM.LE.K) GOTO828                                     MTP2 51 00
00 02 63   004  C          AVERAGE CONCENTRATIONS FOR TIME PERIOD.                MTP2 52 00
00 02 64   004     702  DO 703 JDUM = 1,J                                        MTP2 53 00
00 02 65   004          TCON(JDUM) = STCON(JDUM)/K                                MTP2 54 00
00 02 66   004          DO 703 IDUM = 1,I                                         MTP2 55 00
00 02 67   004     703  PCON(IDUM,JDUM) = SPCON(IDUM,JDUM)/K                     MTP2 56 00
00 02 68   004  C          WRITE SUMMARY HEADING.                                 MTP2 57 00
00 02 69   004          WRITE (IWRI,710) K                                        MTP2 58 00
00 02 70   004     710  FORMAT (//' AVERAGE CONCENTRATIONS FOR',I3,' HOURS.')    MTP2 59 00
00 02 71   004          LDUM = 2                                                  MTP2 60 00
00 02 72   004  C          GO BACK AND WRITE AVERAGE CONCENTRATIONS.              MTP2 61 00
00 02 73   004          GO TO 704                                                 MTP2 62 00
00 02 74   004      60  WRITE(IWRI,849)                                          MTP2 63 00
00 02 75   004     849  FORMAT(/' ENTER "SOURCES" OR "RECEPTORS" OR "METEOROLOGY" OR "END"MTP2 64 00
00 02 76   004          */' ?')                                                   MTP2 65 00
00 02 77   004          ITR=2                                                     MTP2 66 00
00 02 78   004          READ(IRD,200)NS                                           MTP2 67 00
00 02 79   004          IF(NS.EQ.NSOUR.OR.NS.EQ.LSOUR) GOTO802                    MTP2 68 00
00 02 80   004          IF(NS.EQ.NRECE.OR.NS.EQ.LRECE) GOTO816                    MTP2 69 00
00 02 81   004          IF(NS.EQ.NMETE.OR.NS.EQ.LMETE) GOTO819                    MTP2 70 00
00 02 82   004          STOP                                                      MTP2 71 00
00 02 83   004          END                                                       MTP2 72 00
```

```
00 01 70   004          KDUM=1                                                    MTP1 59 00
00 01 71   004     828  TDUM = THETA(KDUM) * 0.0174539                            MTP1 60 00
00 01 72   004          DTHDZ = 0.                                                MTP1 61 00
00 01 73   004          SINT = SIN(TDUM)                                          MTP1 62 00
00 01 74   004          COST = COS(TDUM)                                          MTP1 63 00
00 01 75   004     C        ZERO CONCENTRATION STORAGE LOCATIONS.                 MTP1 64 00
00 01 76   004          DO 70 JDUM = 1,J                                          MTP1 65 00
00 01 77   004          TCON(JDUM) = 0.                                           MTP1 66 00
00 01 78   004          DO 70 IDUM = 1,I                                          MTP1 67 00
00 01 79   004       70 PCON(IDUM,JDUM) = 0.                                      MTP1 68 00
00 01 80   004     C        CALCULATE FOR ALL SOURCES.                            MTP1 69 00
00 01 81   004          DO 110 ID = 1,I                                           MTP1 70 00
00 01 82   004          IF(TSI(ID)-T(KDUM).GT.0.) GOTO 901                        MTP1 71 00
00 01 83   004          WRITE(IWRI,5758)                                          MTP1 72 00
00 01 84   004     5758 FORMAT(' CALCULATION TERMINATED.  STACK GAS TEMP. LE AMBIENT AIR TMTP1 73 00
00 01 85   004         #EMP.')                                                    MTP1 74 00
00 01 86   004          GOTO60                                                    MTP1 75 00
00 01 87   004      901 KEH = 1                                                   MTP1 76 00
00 01 88   004          HFI(ID)=0.                                                MTP1 77 00
00 01 89   004     C        CALCULATE FOR ALL RECEPTORS.                          MTP1 78 00
00 01 90   004          DO 110 JD = 1,J                                           MTP1 79 00
00 01 91   004          R = RQI(ID) - RRECJ(JD)                                   MTP1 80 00
00 01 92   004          S = SQI(ID) - SRECJ(JD)                                   MTP1 81 00
00 01 93   004     C        DETERMINE DOWNWIND DISTANCE.                          MTP1 82 00
00 01 94   004          X = S*COST + R*SINT                                       MTP1 83 00
00 01 95   004          IF(X)110,110,75                                           MTP1 84 00
00 01 96   004     C        DETERMINE CROSSWIND DISTANCE                          MTP1 85 00
00 01 97   004       75 Y = S*SINT - R*COST                                       MTP1 86 00
00 01 98   004          GO TO (80,95), KEH                                        MTP1 87 00
00 01 99   004     C        ESTIMATE PLUME RISE USING BRIGGS'.                    MTP1 88 00
00 02 00   004       80 CALL BEH072 (HF,HX,HMW,F,DELHF,DISTF,DELHX,HPI(ID),TSI(ID),VSI(ID) MTP1 89 00
00 02 01   004        1 ,DI(ID),VFI(ID),KSI(KDUM),U(KDUM),X,DTHDZ,T(KDUM),P)     MTP1 90 00
00 02 02   004          KEH = 2                                                   MTP1 91 00
00 02 03   004          HFI(ID) = HF                                              MTP1 92 00
00 02 04   004          XFI(ID) = DISTF                                           MTP1 93 00
00 02 05   004          IF(X-DISTF)85,85,90                                       MTP1 94 00
00 02 06   004       85 H = HX                                                    MTP1 95 00
00 02 07   004          GO TO 105                                                 MTP1 96 00
00 02 08   004       90 H = HF                                                    MTP1 97 00
00 02 09   004          GO TO 105                                                 MTP1 98 00
00 02 10   004       95 IF(X-XFI(ID))100,99,99                                    MTP1 99 00
00 02 11   004       99 H=HFI(ID)                                                 MTP2 00 00
00 02 12   004          GOTO105                                                   MTP2 01 00
00 02 13   004      100 CALL BEH072 (HF,HX,HMW,F,DELHF,DISTF,DELHX,HPI(ID),TSI(ID),VSI(ID) MTP2 02 00
00 02 14   004        1 ,DI(ID),VFI(ID),KSI(KDUM),U(KDUM),X,DTHDZ,T(KDUM),P)     MTP2 03 00
00 02 15   004          H = HX                                                    MTP2 04 00
00 02 16   004     C        ESTIMATE RELATIVE CONCENTRATION (CHI/Q).              MTP2 05 00
00 02 17   004      105 CALL DBTRCX (U(KDUM),ZJ(JD),H,HL(KDUM),X,X,Y,KST(KDUM),AN,M,SY,SZ, MTP2 06 00
00 02 18   004         *RC,SYMAUT(ID),SZNAUT(ID))                                 MTP2 07 00
00 02 19   004          DUM =          RC * QI(ID)                                MTP2 08 00
00 02 20   004          PCON(ID,JD) = DUM                                         MTP2 09 00
00 02 21   004          SPCON(ID,JD) = SPCON(ID,JD) + DUM                         MTP2 10 00
00 02 22   004          TCON(JD) = TCON(JD) + DUM                                 MTP2 11 00
00 02 23   004          STCON(JD) = STCON(JD) + DUM                               MTP2 12 00
00 02 24   004      110 CONTINUE                                                  MTP2 13 00
00 02 25   004          IF(KHRLY.GT.1) GOTO55                                     MTP2 14 00
00 02 26   004      704 NDUM = 1                                                  MTP2 15 00
```

```
00 01 13   004   800  WRITE(IWRI,826)                                                    MTP1 03 00
00 01 14   004   826  FORMAT(' DO YOU WANT PARTIAL CONCENTRATIONS PRINTED? YES OR NO'/'  MTP1 04 00
00 01 15   004       *?')                                                                MTP1 05 00
00 01 16   004       KNTRL=2                                                             MTP1 06 00
00 01 17   004       READ(IRD,200)NS                                                     MTP1 07 00
00 01 18   004       IF(NS.EQ.NALYES.OR.NS.EQ.LALYES) KNTRL=1                            MTP1 08 00
00 01 19   004       KHRLY=2                                                             MTP1 09 00
00 01 20   004       WRITE(IWRI,827)                                                     MTP1 10 00
00 01 21   004   827 FORMAT(' DO YOU WANT HOURLY CONCENTRATIONS PRINTED? YES OR NO'/' ?MTP1 11 00
00 01 22   004       *')                                                                 MTP1 12 00
00 01 23   004       READ(IRD,200)NS                                                     MTP1 13 00
00 01 24   004       IF(NS.EQ.NALYES.OR.NS.EQ.LALYES) KHRLY=1                            MTP1 14 00
00 01 25   004       DO 701 JDUM=1,J                                                     MTP1 15 00
00 01 26   004       SPCON(JDUM)=0.                                                      MTP1 16 00
00 01 27   004       DO 701 IDUM=1,I                                                     MTP1 17 00
00 01 28   004   701 SPCON(IDUM,JDUM)=0.                                                MTP1 18 00
00 01 29   004       LDUM=1                                                              MTP1 19 00
00 01 30   004       WRITE(IWRI,830)ALP                                                  MTP1 20 00
00 01 31   004   830 FORMAT(//' ',16A4/)                                                 MTP1 21 00
00 01 32   004       WRITE(IWRI,857)                                                     MTP1 22 00
00 01 33   004   857 FORMAT(' MULTIPLE SOURCE MODEL DBT51, VERSION 75128'/)             MTP1 23 00
00 01 34   004       WRITE(IWRI,831)                                                     MTP1 24 00
00 01 35   004   831 FORMAT(' * * * S O U R C E S * * *')                                MTP1 25 00
00 01 36   004       WRITE(IWRI,832)                                                     MTP1 26 00
00 01 37   004   832 FORMAT(' NO',6X,'Q',7X,'HP',6X,'TS',6X,'VS',7X,'D',6X,'VF',8X,      MTP1 27 00
00 01 38   006       *'R',8X,'S',4X,'SYNAUT',4X,'SZNAUT')                                
00 01 39   004       WRITE(IWRI,833)                                                     MTP1 29 00
00 01 40   004   833 FORMAT(' ',5X,'(G/SEC)      (M)     (DEG K)   (M/SEC)     (M)    (M**3/SEC)MTP1 30 00
00 01 41   006       *  (KM)      (KM)      (M)       (M)'/)                             
00 01 42   004       DO 838 NS=1,I                                                       MTP1 32 00
00 01 43   004       GOTO(834,836),IVF                                                   MTP1 33 00
00 01 44   007   834 WRITE(IWRI,835)NS,QI(NS),HPI(NS),TSI(NS),VFI(NS),RQI(NS),SQI(NS),  MTP1 34 00
00 01 45   007       *SYNAUT(NS),SZNAUT(NS)                                              
00 01 46   006   835 FORMAT(' ',I3,F9.2,2F8.1,16X,F9.1,2F9.3,1X,F6.1,4X,F6.1)           
00 01 47   004       GOTO 838                                                            MTP1 36 00
00 01 48   004   836 WRITE(IWRI,837)NS,QI(NS),HPI(NS),TSI(NS),VSI(NS),DI(NS),VFI(NS),   MTP1 37 00
00 01 49   008       *RQI(NS),SQI(NS),SYNAUT(NS),SZNAUT(NS)                              
00 01 50   008   837 FORMAT(' ',I3,F9.1,4F8.1,F9.1,2F9.3,1X,F6.1,4X,F6.1)               
00 01 51   004   838 CONTINUE                                                            MTP1 40 00
00 01 52   004       WRITE(IWRI,839)                                                     MTP1 41 00
00 01 53   004   839 FORMAT(/' * * * R E C E P T O R S * * *')                           MTP1 42 00
00 01 54   004       WRITE(IWRI,840)                                                     MTP1 43 00
00 01 55   004   840 FORMAT(' NO      RREC      SREC',7X,'Z')                             MTP1 44 00
00 01 56   004       WRITE(IWRI,841)                                                     MTP1 45 00
00 01 57   004   841 FORMAT(' ',2X,2(5X,'(KM)'),6X,'(M)'/)                               MTP1 46 00
00 01 58   004       DO 842 NS=1,J                                                       MTP1 47 00
00 01 59   004   842 WRITE(IWRI,843)NS,RRECJ(NS),SRECJ(NS),ZJ(NS)                       MTP1 48 00
00 01 60   004   843 FORMAT(' ',I3,2F9.3,F8.1)                                           MTP1 49 00
00 01 61   004       WRITE(IWRI,844)                                                     MTP1 50 00
00 01 62   004   844 FORMAT(/' * * * M E T E O R O L O G Y * * *')                       MTP1 51 00
00 01 63   004       WRITE(IWRI,845)                                                     MTP1 52 00
00 01 64   004   845 FORMAT(' NO    THETA',6X,'U      KST      HL        T')              MTP1 53 00
00 01 65   004       WRITE(IWRI,846)                                                     MTP1 54 00
00 01 66   004   846 FORMAT(' ',6X,'(DEG)    (M/SEC)',7X,'(M)     (DEG K)'/)             MTP1 55 00
00 01 67   004       DO 847 NS=1,K                                                       MTP1 56 00
00 01 68   004   847 WRITE(IWRI,848)NS,THETA(NS),U(NS),KST(NS),HL(NS),T(NS)             MTP1 57 00
00 01 69   004   848 FORMAT(' ',I3,2F8.1,I5,2F8.0)                                       MTP1 58 00
```

```
00 00 56   004          READ(IRD,9999)(VSI(NS),NS=1,I)                                  MTP 05
00 00 57   004          WRITE(IWRI,809)                                                 MTP0 55 00
00 00 58   004     809  FORMAT(' ENTER DIAMETER (M) OF EACH STACK')                     MTP0 56 00
00 00 59   004          READ(IRD,9999)(DI(NS),NS=1,I)                                   MTP 05
00 00 60   004          DO 810 JDUM=1,I                                                 MTP0 58 00
00 00 61   004     810  VFI(JDUM)=0.785398*VSI(JDUM)*DI(JDUM)*DI(JDUM)                  MTP0 59 00
00 00 62   004          GOTO813                                                         MTP0 60 00
00 00 63   004     811  WRITE(IWRI,812)                                                 MTP0 61 00
00 00 64   004     812  FORMAT(' ENTER VOLUME FLOW (M**3/SEC) FOR EACH STACK')          MTP0 62 00
00 00 65   004          READ(IRD,9999)(VFI(NS),NS=1,I)                                  MTP 06
00 00 66   006     813  WRITE(IWRI,8144)
00 00 67   004    8144  FORMAT(' ENTER INITIAL HORIZONTAL DISPERSION COEFFICIENT '
00 00 68   004          *'FOR EACH SOURCE')
00 00 69   004          READ(IRD,9999)(SYNAUT(NS),NS=1,I)
00 00 70   004          WRITE(IWRI,8155)
00 00 71   005    8155  FORMAT(' ENTER INITIAL VERTICAL DISPERSION COEFFICIENT '
00 00 72   004          *'FOR EACH SOURCE')
00 00 73   004          READ(IRD,9999)(SZNAUT(NS),NS=1,I)
00 00 74   006          WRITE(IWRI,814)
00 00 75   004     814  FORMAT(' ENTER COORDINATES (KM) OF EACH STACK.  ORDERED PAIRS')  MTP0 64 00
00 00 76   004          READ(IRD,9999)(RQI(NS),SQI(NS),NS=1,I)                          MTP0 65 00
00 00 77   004     816  WRITE(IWRI,815)MAXR                                             MTP 06
00 00 78   004     815  FORMAT(' ENTER NUMBER OF RECEPTORS TO BE PROCESSED. MAX',I3)    MTP0 67 00
00 00 79   004          READ(IRD,9999)J                                                 MTP0 68 00
00 00 80   004          IF(J.LT.1.OR.J.GT.MAXR) GOTO816                                 MTP 06
00 00 81   004          WRITE(IWRI,817)                                                 MTP0 70 00
00 00 82   004     817  FORMAT(' ENTER COORDINATES (KM) OF EACH RECEPTOR.  ORDERED PAIRS')  MTP0 71 00
00 00 83   004          READ(IRD,9999)(RRECJ(NS),SRECJ(NS),NS=1,J)                      MTP0 72 00
00 00 84   004          WRITE(IWRI,818)                                                 MTP 07
00 00 85   004     818  FORMAT(' ENTER HEIGHT (M) ABOVE GROUND FOR EACH RECEPTOR')      MTP0 74 00
00 00 86   004          READ(IRD,9999)(ZJ(NS),NS=1,J)                                   MTP0 75 00
00 00 87   004     819  WRITE(IWRI,820)                                                 MTP 07
00 00 88   004     820  FORMAT(' ENTER NUMBER OF HOURS TO BE AVERAGED.  MAX 24')        MTP0 77 00
00 00 89   004          READ(IRD,9999)K                                                 MTP0 78 00
00 00 90   004          IF(K.LT.1.OR.K.GT.24) GOTO819                                   MTP 07
00 00 91   004          WRITE(IWRI,821)                                                 MTP0 80 00
00 00 92   004     821  FORMAT(' ENTER WIND DIRECTION (DEG) FOR EACH HOUR')             MTP0 81 00
00 00 93   004          READ(IRD,9999)(THETA(NS),NS=1,K)                                MTP0 82 00
00 00 94   004          WRITE(IWRI,822)                                                 MTP 08
00 00 95   004     822  FORMAT(' ENTER WIND SPEED (M/SEC) FOR EACH HOUR')               MTP0 84 00
00 00 96   004          READ(IRD,9999)(U(NS),NS=1,K)                                    MTP0 85 00
00 00 97   004          WRITE(IWRI,823)                                                 MTP 08
00 00 98   004     823  FORMAT(' ENTER STABILITY CLASS FOR EACH HOUR')                  MTP0 87 00
00 00 99   004          READ(IRD,9999)(KST(NS),NS=1,K)                                  MTP0 88 00
00 01 00   004          WRITE(IWRI,824)                                                 MTP 08
00 01 01   004     824  FORMAT(' ENTER MIXING HEIGHT (M) FOR EACH HOUR')               MTP0 90 00
00 01 02   004          READ(IRD,9999)(HL(NS),NS=1,K)                                   MTP0 91 00
00 01 03   004          WRITE(IWRI,825)                                                 MTP 09
00 01 04   004     825  FORMAT(' ENTER AMBIENT AIR TEMPERATURE (DEG K) FOR EACH HOUR')  MTP0 93 00
00 01 05   004          READ(IRD,9999)(T(NS),NS=1,K)                                    MTP0 94 00
00 01 06   004          IF(ITR.LT.2) GOTO800                                            MTP 09
00 01 07   004          WRITE(IWRI,850)                                                 MTP0 96 00
00 01 08   004     850  FORMAT(' DO YOU WISH TO CHANGE THE TITLE? YES OR NO'/' ?')      MTP0 97 00
00 01 09   004          READ(IRD,200)NS                                                 MTP0 98 00
00 01 10   004          IF(NS.NE.NALYES.AND.NS.NE.LALYES) GOTO800                       MTP0 99 00
00 01 11   004          WRITE(IWRI,801)                                                 MTP1 00 00
00 01 12   004          READ(IRD,200)ALP                                                MTP1 01 00
```

```
ÆLT,L [redacted].MAIN
EL TCT7 RL1870 04/06-14:16:53-(8,)
00 00 01    004   C        DBT51                                                                    MT PO 01 00
00 00 02    004   C        DBT51 CALCULATES CONCENTRATIONS FROM MULTIPLE POINT SOURCES AND MT PO 02 00
00 00 03    004   C         AVERAGES CONCENTRATIONS FOR THE TIME PERIOD.                            MT PO 03 00
00 00 04    004   C        THIS IS THE JUNE 1973 VERSION OF DBT51.                                  MT PO 04 00
00 00 05    004   C         THIS PROGRAM CALLS SUBROUTINES: BEHO72 AND DBTRCX.                      MT PO 05 00
00 00 06    004   C        D. B. TURNER, RESEARCH METEOROLOGIST, MODEL APPLICATIONS BRANCH MT PO 06 00
00 00 07    004   C         METEOROLOGY LABORATORY, ENVIRONMENTAL PROTECTION AGENCY.                MT PO 07 00
00 00 08    004   C           ROOM 316B, NCHS BUILDING, RTP, PHONE (919) 549-8411 EXT 4564 MT PO 08 00
00 00 09    004   C        MAILING ADDRESS: MTL, EPA, RESEARCH TRIANGLE PARK, NC 27711.             MT PO 09 00
00 00 10    004   C         * ON ASSIGNMENT FROM NATIONAL OCEANIC AND ATMOSPHERIC                   MT PO 10 00
00 00 11    004   C                ADMINISTRATION, DEPARTMENT OF COMMERCE.                          MT PO 11 00
00 00 12    004          DIMENSION ALP(16),QI(26),HPI(26),TSI(26),VSI(26),DI(26),                  MT PO 12 00
00 00 13    004        1 VFI(26),ROI(26),SQI(26),RRECJ(31),SRECJ(31),ZJ(31),                       MT PO 13 00
00 00 14    004        2 TCON(30),PCON(25,30),HFI(25),XFI(25),STCON(30),SPCON(25,30)               MT PO 14 00
00 00 15    004        3,SYNAUT(26),SZNAUT(26)
00 00 16    004          DIMENSION THETA(24),U(24),KST(24),HL(24),T(24)                            MT PO 15 00
00 00 17    004          DATA NALYES,NSOUR,NRECE,NMETE/'YES ','SOUR','RECE','METE'/                MT PO 16 00
00 00 18    004          DATA LALYES/01711451630 4 0/                                              MT PO 17 00
00 00 19    004          DATA LSOUR/016315716516 27/                                               MT PO 18 00
00 00 20    004          DATA LRECE/016214514314 5/                                                MT PO 19 00
00 00 21    004          DATA LMETE/015514516414 5/                                                MT PO 20 00
00 00 22    004          P=960.                                                                    MT PO 21 00
00 00 23    004          ITR=1                                                                     MT PO 22 00
00 00 24    004          IRD = 5                                                                   MT PO 23 00
00 00 25    004          IWRI = 6                                                                  MT PO 24 00
00 00 26    004   C***    THE FOLLOWING READ IS A DUMMY PROCESSOR READ FOR U1110                   MT PO 25 00
00 00 27    004          READ(IRD,200)ALP                                                          MT PO 26 00
00 00 28    004          MAXQ = 25                                                                 MT PO 27 00
00 00 29    004          MAXR = 30                                                                 MT PO 28 00
00 00 30    004          WRITE(IWRI,801)                                                           MT PO 29 00
00 00 31    004      801 FORMAT(' ENTER ALPHANUMERIC TITLE (UP TO 64 CHARACTERS)'/' ?')            MT PO 30 00
00 00 32    004          READ(IRD,200)ALP                                                          MT PO 31 00
00 00 33    004      200 FORMAT(16A4)                                                              MT PO 32 00
00 00 34    004      802 WRITE(IWRI,803)MAXQ                                                       MT PO 33 00
00 00 35    004      803 FORMAT(' ENTER NUMBER OF SOURCES TO BE CONSIDERED. MAX',I3)               MT PO 34 00
00 00 36    004          READ(IRD,9999)I                                                           MTP 03
00 00 37    004     9999 FORMAT()
00 00 38    004          IF(I.LT.1.OR.I.GT.MAXQ) GOTO 802                                          MT PO 36 00
00 00 39    004          WRITE(IWRI,804)                                                           MT PO 37 00
00 00 40    004      804 FORMAT(' ENTER SOURCE STRENGTH (G/SEC) FOR EACH STACK')                   MT PO 38 00
00 00 41    004          READ(IRD,9999)(QI(NS),NS=1,I)                                             MTP 03
00 00 42    004          WRITE(IWRI,805)                                                           MT PO 40 00
00 00 43    004      805 FORMAT(' ENTER PHYSICAL HEIGHT (M) OF EACH STACK')                        MT PO 41 00
00 00 44    004          READ(IRD,9999)(HPI(NS),NS=1,I)                                            MTP 04
00 00 45    004          WRITE(IWRI,806)                                                           MT PO 43 00
00 00 46    004      806 FORMAT(' ENTER GAS TEMPERATURE (DEG K) OF EACH STACK')                    MT PO 44 00
00 00 47    004          READ(IRD,9999)(TSI(NS),NS=1,I)                                            MTP 04
00 00 48    004          IVF=1                                                                     MT PO 46 00
00 00 49    004          WRITE(IWRI,807)                                                           MT PO 47 00
00 00 50    004      807 FORMAT(' IS VOLUME FLOW KNOWN FOR EACH STACK? YES OR NO'/' ?')            MT PO 48 00
00 00 51    004          READ(IRD,200)NS                                                           MT PO 49 00
00 00 52    004          IF(NS.EQ.NALYES.OR.NS.EQ.LALYES) GOTO811                                  MT PO 50 00
00 00 53    004          IVF=2                                                                     MT PO 51 00
00 00 54    004          WRITE(IWRI,808)                                                           MT PO 52 00
00 00 55    004      808 FORMAT(' ENTER GAS VELOCITY (M/SEC) FOR EACH STACK')                      MT PO 53 00
```

Computer listings are given below for the two programs of PTMTP that are affected by the modification (MAIN and DBTRCX). The changes are indicated by underlining wherever material was added to the unmodified program (there were no deletions). A key portion of the modification is in lines 66 to 73 of MAIN. This is where the initial dispersion coefficients (SYNAUT $\equiv \sigma_{yo}$, SZNAUT $\equiv \sigma_{zo}$) are added as source parameters to be considered in the concentration calculations. The heart of the modification is in lines 55 and 56 of DBTRCX, where the initial dispersion coefficients (SYN $\equiv \sigma_{yo}$, SZN $\equiv \sigma_{zo}$) are combined with the regular dispersion coefficients before the concentration calculations are made. The other changes are peripheral in nature, involving formatting, arrays, variable lists, and writing instructions.

In executing the model, the only change is the inclusion of σ_{yo} and σ_{zo} with the input data for each source. In the case of the cement plant analysis, these values were previously derived by dividing the initial plume dimensions (Table 1) of each source by the factor 4.3 and rounding to the nearest tenth of a meter. Zero values for σ_{yo} and σ_{zo} were entered for the "true" point sources, that is, those having no initial plume dimensions. The computer listings follow.

At a distance of 0.5 km from the plant property line, the IPFPE sources contribute 96 percent of the maximum impact (Receptor 15). Of this, the raw materials storage building contributes nearly 51 percent (128 $\mu g/m^3$). At a distance of 1.0 km the raw materials storage building contributes 52 percent (67 $\mu g/m^3$) of the maximum impact (Receptor 25). IPFPE sources in all contribute nearly 95 percent of the total calculated ground-level concentration at Receptor 25.

Emissions from the kiln stack (24.31 g/sec) exceed that of all of the IPFPE sources combined, yet this source makes a relatively small contribution to the total air quality impact of the plant. The high exit velocity and high temperature of the exhaust gases from the kiln stack cause a substantial plume rise, which in turn reduces the ground-level impact. On the other hand, the lack of plume rise and the low release height of the IPFPE sources result in high ground-level concentrations from sources with relatively low emission rates.

The results of the application of the dispersion model to the hypothetical cement plant clearly show that a control plan should be directed toward the control of the IPFPE sources. Specifically, the analysis clearly shows that maximum improvement of air quality should result from the control of emissions from the raw materials storage building, the quarry, coal dumping, the roof monitor for the clinker storage building, and the haul road.

Addendum: Modification of PTMTP

As discussed earlier, PTMTP was modified for application to a hypothetical cement plant. The conceptual basis for the modification is discussed under Model Application. The procedure whereby the modification was effected is given here.

Table 3. SOURCE CONTRIBUTION TABLE FOR THE HYPOTHETICAL CEMENT PLANT, CONCENTRATIONS IN $\mu g/m^3$

Receptor no.	Conventional point sources				IPFPE Sources						Remaining IPFPE sources[a]	Total concentration
	Baghouse, crushing	Kiln stack	Baghouse, clinker	Baghouse, loading	Raw materials storage	Roof monitor grinding	Coal dumping	Roof monitor clinker	Haul road	Quarry		
1	7	<1	<1	<1	29	<1	1	2	6	<1	<1	46
2	8	<1	<1	<1	138	<1	9	11	13	<1	<1	183
3	6	<1	<1	<1	306	3	38	37	21	<1	7	421
4	4	<1	<1	<1	383	10	52	77	39	<1	19	587
5	2	<1	<1	<1	418	16	55	108	19	136	26	782
6	1	<1	<1	<1	337	18	29	120	2	91	25	625
7	<1	<1	<1	<1	187	18	13	130	<1	<1	13	366
8	<1	<1	<1	<1	107	12	4	127	<1	<1	6	261
9	<1	<1	<1	<1	47	6	<1	95	<1	<1	<1	154
10	<1	<1	<1	<1	12	3	<1	61	<1	<1	<1	80
11	2	<1	<1	<1	32	<1	2	6	2	<1	<1	46
12	2	<1	<1	<1	78	2	6	19	3	2	5	116
13	2	<1	<1	<1	110	5	10	35	5	17	5	191
14	2	<1	1	<1	119	6	11	46	5	35	8	234
15	1	<1	1	<1	128	7	12	48	4	41	8	251
16	1	<1	1	<1	100	7	7	53	2	28	7	207
17	1	<1	1	<1	59	5	4	49	1	13	5	139
18	<1	<1	1	<1	38	3	2	34	<1	5	1	87
19	<1	<1	1	<1	21	1	1	22	<1	1	<1	49
20	<1	<1	1	<1	8	2	<1	15	<1	<1	<1	26
21	1	<1	<1	<1	23	1	2	6	1	1	<1	36
22	1	<1	<1	<1	46	2	4	15	2	5	1	78
23	1	<1	1	<1	58	3	5	24	2	11	3	109
24	1	<1	1	<1	62	4	5	27	2	14	2	119
25	1	<1	1	<1	67	4	5	28	2	15	4	128
26	1	<1	2	<1	51	4	4	30	<1	11	1	106
27	<1	<1	1	<1	30	3	2	24	<1	6	1	70
28	<1	<1	1	<1	20	2	1	15	<1	3	<1	45
29	<1	<1	1	<1	12	1	1	10	<1	1	<1	27
30	<1	<1	1	<1	5	1	<1	7	<1	<1	<1	14

[a] Those sources whose individual contributions are considered negligible.

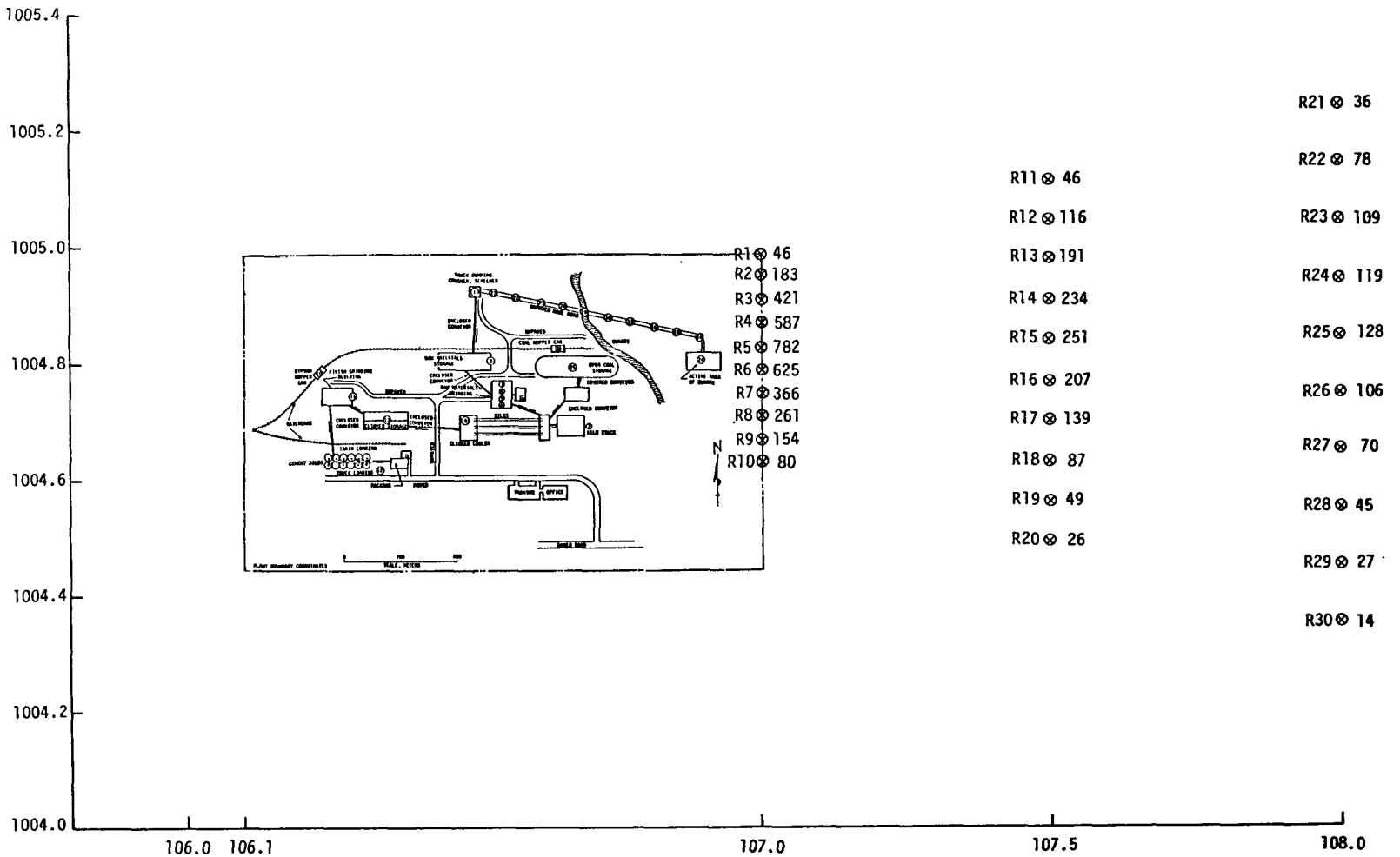

Figure 3. Ground level concentrations ($\mu g/m^3$) of total particulate at each receptor (1-30) from the hypothetical cement plant.

receptor rows were designed so as to straddle the expected axis of maximum impact. The receptor array was designed to fan out with increasing distance in a manner consistent with the variation of the wind direction during the period. The highest impact of the IPFPE sources (excluding the impact on plant property) was expected at the fence line. The receptors farther downwind were included in order to estimate the rate at which the impact decreases with downwind distance.

Results

The results of the modeling are depicted in Figure 3. The maximum 24-hour ground-level concentration resulting from the contribution of all sources at the plant is 782 $\mu g/m^3$. This occurs at Receptor 5 (Figure 3), which is at the plant fenceline along the expected axis of maximum concentration. The maximum impact decreases rapidly as the distance from the plant to the receptor increases. Proceeding eastward from Receptor 5, the 24-hour ground-level concentrations at Receptor 15 (1/2 km) and Receptor 25 (1 km) are 251 $\mu g/m^3$ and 128 $\mu g/m^3$, respectively.

The contribution of each source to the total plant impact is presented on a receptor-by-receptor basis in Table 3. At Receptor 5, IPFPE sources contribute nearly 100 percent of the impact. Of this, approximately 53 percent is contributed by the raw materials storage building (Source 2) while the quarry (Source 24) accounts for 17 percent (136 $\mu g/m^3$). The roof monitor for the clinker storage building (Source 13) contributes 14 percent (108 $\mu g/m^3$) of the impact at Receptor 5 and contributes 130 $\mu g/m^3$ at Receptor 7. Coal dumping contributes 7 percent (55 $\mu g/m^3$) of the impact at Receptor 5, while the haul road emissions contribute about 2 percent (19 $\mu g/m^3$) of the impact at Receptor 5 and 39 $\mu g/m^3$ at Receptor 4.

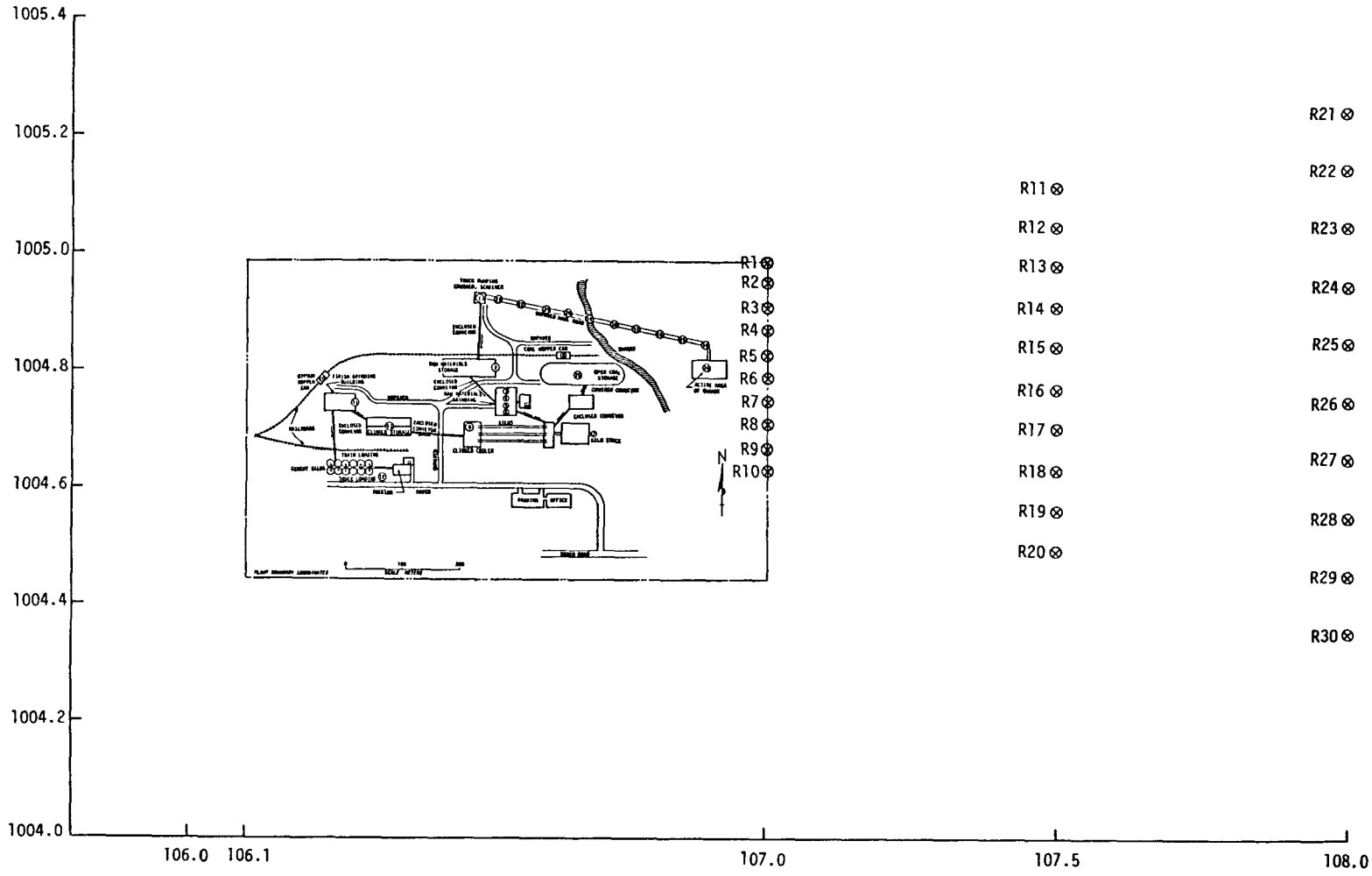

Figure 2. Receptor array for the hypothetical cement plant.

of wind speeds is a reasonable worst-case assumption in that (1) it is sufficiently low to result in a relatively high ambient impact for the low-level IPFPE sources, (2) it is sufficiently high to be consistent with the high direction persistence described above, and (3) it is sufficiently high for the expectation of wind-erosion emissions (e.g., from coal storage, raw materials storage).

Atmospheric stability was assumed as "neutral" (Pasquill-Gifford Class "D") for the 24-hour period. Physically, this represents a period when the sky is overcast during the entire time. This type of meteorological situation is much more likely to have the light, direction-persistent, winds described above than is the more common situation of variable, partial cloudiness. The latter is typically characterized by large differences in wind direction between the nocturnal (stable) and the daytime (unstable) periods. Moreover, during each period there is typically a large hour-to-hour variation in the wind direction, especially when the speeds are relatively low. Thus, for the 24-hour-average impact of low-level sources, neutral stability is a logical worst-case assumption.

The assumptions of temperature and mixing height are not critical for assessing the close-in impact of low-level, non-buoyant sources. Representative values (Table 2) were chosen to satisfy the input requirements of the model.

The Receptor Array

Thirty receptor locations, the maximum number allowable in PTMTP, were selected for the calculations of ambient impact. The receptor array is depicted in Figure 2. Ten equally spaced receptors were placed along the eastern fence line of the plant. Parallel rows of 10 each were also placed 1/2 kilometer and 1 kilometer farther downwind. The

Table 2. ASSUMED METEOROLOGICAL CONDITIONS

Hour No.	Wind direction,[a] degrees	Wind velocity, M/sec	Stability class	Mixing height, M	Ambient temperatures, °K
1	261	2.5	4[b]	1000	299
2	256	3.0	4	1000	299
3	268	3.0	4	1000	298
4	260	3.5	4	1000	298
5	267	3.0	4	1000	297
6	255	2.5	4	1000	297
7	258	3.5	4	1000	297
8	263	3.0	4	1000	299
9	268	4.0	4	1000	300
10	272	5.0	4	1000	301
11	281	5.5	4	1000	301
12	276	5.5	4	1000	302
13	268	4.5	4	1000	302
14	285	5.5	4	1000	302
15	273	5.0	4	1000	303
16	278	4.5	4	1000	303
17	270	5.5	4	1000	302
18	279	5.0	4	1000	302
19	264	4.0	4	1000	301
20	271	3.5	4	1000	300
21	260	3.0	4	1000	300
22	270	3.5	4	1000	299
23	258	4.0	4	1000	299
24	268	3.0	4	1000	299

[a] Direction from which the wind is blowing.

[b] Numerical equivalent of Pasquill-Gifford "D".

dispersed due to aerodynamically induced turbulence so that the plume has an initial dimension from the surface to a height of 20 meters. The initial horizontal dimension (50 meters) is the width of the area itself.

- Source 25: these emissions originate from wind erosion at the tops (9 meters) of the coal piles. For the same reason as described for the quarry emissions, the coal pile emissions are assigned an initial vertical dimension from the surface to a height of 18 meters. The initial horizontal dimension (70 meters) is the width of the storage area itself.

Meteorological Assumptions

The purpose of the modeling analysis was to estimate the 24-hour average impact of the IPFPE sources under conditions approximating the "worst case." Consistent with this, a reasonable worst-case set of meteorological data was synthesized for input into PTMTP. (For application to actual situations, such a data set should be derived from a study of meteorological records in the area in question). The data set consists of 24 hourly (midnight-to-midnight) values of wind speed, wind direction, atmospheric stability (Pasquill-Gifford), and mixing height. The data set is shown in Table 2.

The worst-case prevailing wind direction was taken as being along the long axis of the plant, from west to east (a wind from the west has a direction of 270°). Realistically, of course, a precise wind direction does not prevail for an entire day; therefore, the assumed winds were allowed to vary within a 30° sector (centered about 270°). This is a realistic worst-case assumption for wind-direction persistence. Clearly, wind-direction persistence contributes to higher, time-averaged, downwind impact. The wind speed was assumed to be light-to-moderate, varying in the 2.5 to 5.5 m/sec (5.6 to 12.3 mph) range during the period. This range

temperature be greater than the temperature of the ambient air (see Meteorological Assumptions, below).

With reference to Table 1 and Figure 1, the individual sources are briefly discussed as follows:

- Sources 1, 7, 9, and 12: self-explanatory.

- Source 2: the ends of the raw materials storage building are open. The (windblown) emissions exit the east end because the wind is assumed to blow generally from west to east during the modeling period. The emissions are assigned a release height of 10 meters and initial plume dimensions equal to the dimensions of the end of the open building.

- Sources 3-6: discussed above.

- Sources 8 and 10: the dumping occurs at ground level. The initial plume that is generated by the dumping is assumed to cover a 10-meter square area and have a depth of 5 meters.

- Source 11: the emissions are assumed to exit through several exhausts in the sides and roof of the building. The emissions are assigned a release height of one-half the building height. From this point the emissions are assumed to be initially dispersed (normally) about the east end of the building so that the initial plume dimensions correspond to the dimensions of the building itself.

- Source 13: discussed above.

- Sources 14 through 23: Each is the midpoint of 10 equal segments of the road. The emissions are assigned a release height of zero, an initial plume (crosswind) width equal to the width of the road (20 meters), and an initial depth of 5 meters. The initial depth is attributable to the turbulence generated by the truck traffic that gives rise to the emissions.

- Source 24: These emissions originate above ground level (10 meters) from the dumping of materials from conveyors onto storage piles. From this height, the emissions are assumed to be vertically

Table 1. ASSUMED SOURCE CHARACTERISTICS

Number, (See Figure 1 for location)	Source (C) = conventional (F) = IPFPE	Emission rate, (g/sec)	Release height, (meters)	Initial plume dimensions (meters)		Vertical velocity, (m/sec)	Stack temperature, (°K)	Stack diameter, (meters)
				Vertical[a]	Horizontal			
1	Baghouse for truck dumping, screening, and crushing (C)	0.15	6.1	0	0	18	304	0.75
2	Raw materials storage (F)	7.56	10	20	53	b	b	b
3-6	Roof monitors for raw materials grinding (F)	0.12 (each)	18	0	0	b	b	b
7	Kiln stack (C)	24.31	61	0	0	12.0	477	5.0
8	Coal dumping (F)	0.52	0	5	10	b	b	b
9	Baghouse for clinker cooler (C)	0.80	24	0	0	11.0	380	1.7
10	Gypsum dumping (F)	0.010	0	5	10	b	b	b
11	Finish grinding building (F)	0.32	9	18	32	b	b	b
12	Train and truck loading (C)	0.020	38	0	0	3.0	323	1.0
13	Roof monitor for clinker storage (F)	4.17	12	0	0	b	b	b
14-23	Haul road (F)	0.024 (each)	0	5	20	b	b	b
24	Active area of quarry (F)	1.10	10	20	50	b	b	b
25	Open coal storage (F)	0.20	9	18	70	b	b	b

[a] For non-zero values, the plume extends from 0 (ground-level) to the height indicated.

[b] The velocity, temperature and diameter of these sources were input to PTMTP as 0, 304, and 1.0, respectively. This ensures a plume rise of zero and statisfies model input requirements (see text).

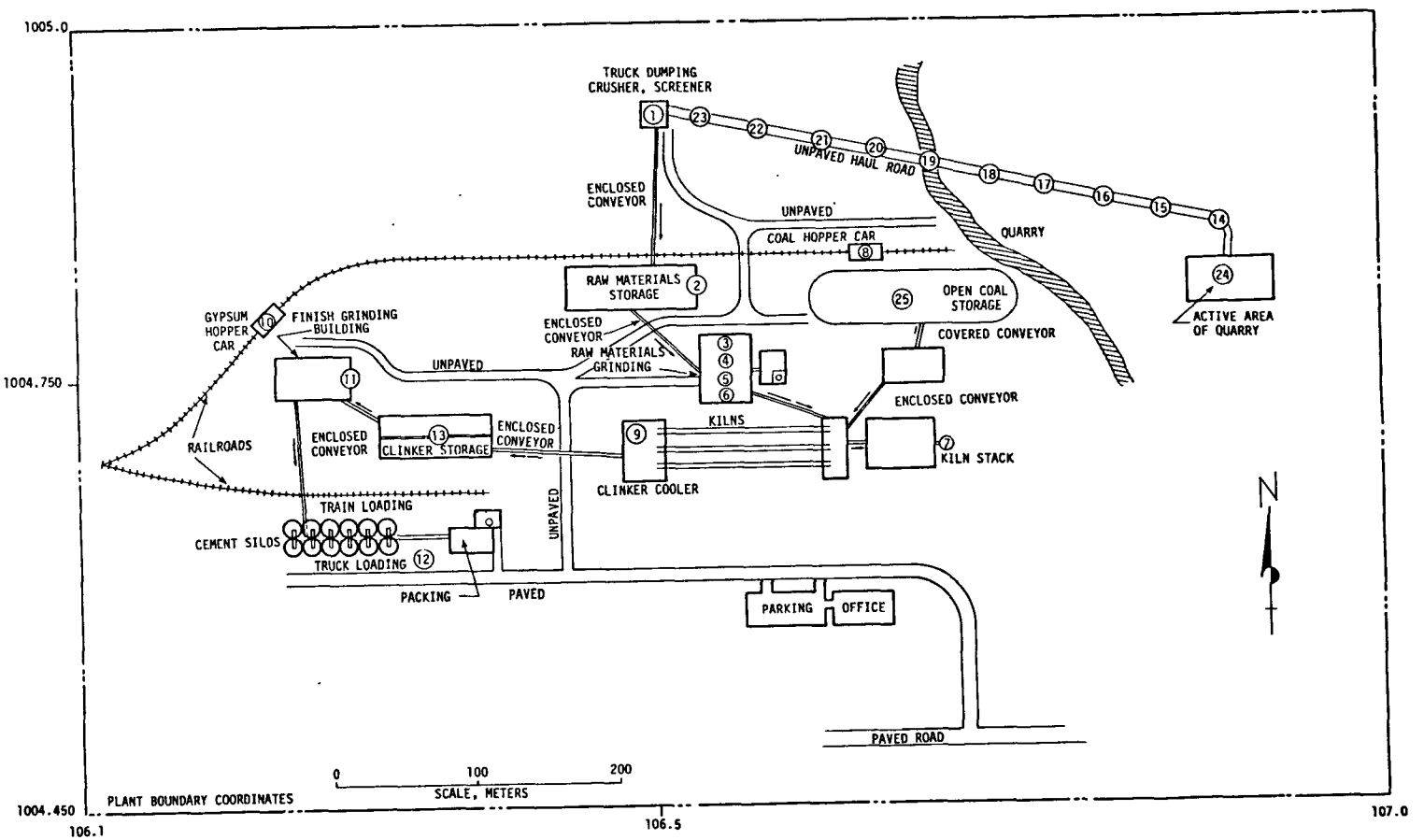

Figure 1. Assumed layout of the cement plant.

Source Characteristics

The hypothetical cement plant is depicted in Figure 1. The sources that were considered in the modeling are denoted by the encircled numbers 1 through 25. The sources (point or pseudo point) are assumed to be located at the centers of the circles. The source characteristics are detailed in Table 1.

As indicated in Table 1, Sources 1, 7, 9, and 12 are conventional (rather than IPFPE) sources. They are also "true" point sources (no initial plume dimensions) and have clearly defined vertical velocities, temperatures, and stack diameters. These sources were modeled by PTMTP in the traditional manner. All other sources in Table 1 are IPFPE sources. Of these, Sources 2, 8, 10, 11, 14 through 23, 24, and 25 have initial plume dimensions as discussed above. The remaining IPFPE sources (3 through 6, 13) do not have such initial dimensions. Sources 3 through 6 are small, circular, roof monitors, while source 13 is an elongated roof monitor which is approximated at its midpoint as a point source without initial dimensions.

The IPFPE's were assumed to be emitted at very low vertical velocities and at temperatures at or very near the temperature of the ambient air. Thus, they were assumed to undergo no plume rise, but rather, to vertically and horizontally disperse along the axis of the wind about a centerline height given by the assumed release height. To ensure that the model would treat the IPFPE sources in this manner and at the same time satisfy the data input requirements, of PTMTP, artifical values were assigned for the exit velocity, temperature, and "stack" diameter of these sources (Footnote b, Table 1). The "stack" temperature was set at 304°K because this satisfies the input requirement that stack

in cement plants have a significant three-dimensional extent. This problem was addressed by modifying PTMTP so that such sources could be modeled as pseudo point sources, located at the centers of the actual sources, with prescribed initial plume dimensions in the vertical and horizontal crosswind directions. It was possible to define a crosswind direction because of the assumption of a prevailing wind direction (west to east) during the 24-hour period (see Meteorological Assumptions below). The assignment of initial plume dimensions is a means of accounting for the fact that the IPFPE's are initially dispersed at their origins. These initial plume dimensions are defined by the dimensions of the source itself and/or the nature of the physical process generating the emissions. In this analysis, the initial plumes were assumed to be distributed normally (Gaussian distribution) about the pseudo point sources in the vertical and horizontal crosswind directions. This permitted the initial plumes to be described by assigning initial values to the vertical and horizontal crosswind dispersion coefficients (σ_{zo} and σ_{yo} respectively). These values were determined by dividing the initial plume dimensions by the factor 4.3.[a] The values of σ_{yo} and σ_{zo} were input to PTMTP along with the other physical parameters for each source.[b]

The length and orientation of one IPFPE source--a haul road--was such that it was necessary to segment the source along its length and then to treat each segment as a pseudo point source as described above. For all other elongated sources, very little error was introduced by approximating each as a single point source located at the midpoint.

---

[a] Ref. No. 2, p. 39.

[b] For details the reader is referred to Addendum: Modification of PTMTP.

APPENDIX C
EXAMPLE OF PRELIMINARY DISPERSION ANALYSIS

Introduction

Suggestions for applying preliminary, short-term, dispersion modeling to sources of industrial process fugitive particulate emissions (IPFPE's) are presented in Section 4.2. A case example of such modeling is presented here. This example is presented for the purpose of illustration only. The situation that is modeled, a cement plant, is hypothetical. The plant layout, the characteristics of the sources, and the emission rates are assumed. The specific procedure is not recommended as necessarily the best approach to similar actual problems. The attention of the reader is therefore directed to the conceptual basis of the approach, and to the general rationale, rather than to the numerical details. The reader should also bear in mind that the modeling analysis is of the simple, preliminary type as discussed in Sections 4.2 and 4.2.1. It does not consider the complicating factors (Section 4.2) that can be associated with the modeling of IPFPE's.

Model Application

The hypothetical cement plant was modeled using PTMTP, a generally available dispersion model, which is referred to in Section 4.2.1. PTMTP is a multiple-point, multiple-receptor model that calculates concentrations for as many as 24 consecutive hours of meteorological data input. It is designed for application to point sources only. This limitation presents a problem, since many of the IPFPE sources

APPENDIX C

EXAMPLE OF PRELIMINARY DISPERSION ANALYSIS

REFERENCES FOR APPENDIX B

1. Fugitive Emissions Control Technology for Integrated Iron and Steel Plants, Draft. Midwest Research Institute. Prepared for U.S. Environmental Protection Agency, Industrial Environmental Research Laboratory. Contract No. 68-02-2120. Research Triangle Park, North Carolina. January 17, 1977.

Table B-2. SOIL STABILIZING CHEMICALS AND CONTROL EFFICIENCIES[1]

	Dust Suppression Chemical (water plus as listed)	Control Efficiency (%)
1.	Dustrol "A" 1:5000	-7.8
2.	T-Det 1:4	76
3.	CaO 1%	2.8
4.	$CaCl_2$ 2%	33.8
5.	Cements 5%	26.8
6.	Coherex 1:15	22.5
7.	Coherex 1:8	15.5
8.	Coherex 1:4	97.2
9.	Dowell Chemical Binder 1%	70.4
10.	Dowell Chemical Binder 2%	97.2
11.	Dowell Chemical Binder 3%	97.2
12.	1% $CaCl_2$, in 1:5000 Dustrol "A"	15.5
13.	1% CaO in 1:8 Coherex	31
14.	1% CaO in 2% Dowell Chemical Binder	95.1
15.	1% CaO in 3% Dowell Chemical Binder	81.7
16.	Dried Whole Blood 5%	27.1
17.	Dried Pork Plasma 5%	79
18.	Dried Pork Plasma 3%	96
19.	1% $CaCl_2$ in 3% Pork Plasma	52
20.	Dri-Pro 5%	7
21.	1% CaO, 1:3000 T-Det in 2% Dowell Chemical Binder	98.6
22.	1% CaO, 1% $CaCl_2$, 1:4000 Dustrol "A" + 2% Dowell Chemical Binder	98.6

Table B-1 (continued). CHEMICAL DUST SUPPRESSANTS, THEIR COST, USES, AND APPLICATION RATES[a]

Company/address phone/contact	Product name/ product type	Cost	Uses/comments	Density, dilution and application rates
Dubois Chemical Dubois Tower Cincinnati, Ohio 513-762-6000 Mr. Burger	Floculite 600	100 lb - $2.81/lb 1000 lb - $2.74/lb	Used in waste water treatment from mines. Also helps keep down dust on haul roads.	1-2 lb/1000 gal
Mona Industries, Inc. 65 E. 23rd St. Paterson, NJ 07524 201-274-8220 Mr. George Lowry	Monawet Mo-70E	500 lb drums 1-50 drums - $0.455/lb Bulk - $0.385/lb	Used in coal industry as dust suppresant	0.1 percent in water, must be reapplied when water evaporates
AMSCO Division Union Oil Company of California 14445 Alondra Blvd. La Miroda, Calif. 90638 714-523-5120 Dr. Ralph H. Bauer	Res AB 1881 Styrene Butadiene		Soil stabilizer particularly in conjunction with wood fiber malches. Free pumping in conventional hydroseeding equipment. Not to be applied in soils with pH less than 6.0.	8.2 ± 0.1 lb/gallon

[a] Mention of company or product names is not to be considered as an endorsement by the U.S. Environmental Protection Agency.

Table B-1 (continued). CHEMICAL DUST SUPPRESSANTS, THEIR COST, USES, AND APPLICATION RATES[a]

Company/address phone/contact	Product name/ product type	Cost	Uses/comments	Density, dilution and application rates
Johnson-March Co. 3018 Market St. Philadelphia, PA 19104 215-222-1411 Mr. Sam Jaffe	Compound-MR (regular)	55 gallon drums 1-3 drums - $6.00/gal 4-11 drums - $5.00/gal >11 drums - $3.35/gal	Usually used with a spray system or storage piles, conveying systems.	1:1000 water applied as needed
	Compound-SP-301	1-4 drums - $1.80/gal 5-9 drums - $1.75/gal 10-44 drums - $1.70/gal >45 drums - $1.65/gal	Used on haul roads, parking lots, stabilizing cleared areas, aid in vegetation growth.	1 gal/100 ft^2 ± depending on conditions. Application lasts 6 months to a year
	Compound-MR (super-concentrate)	$6.75/gal	Same as Compound-MR (regular)	1:3500 water
	Compound-SP-400	1-4 drums - $3.50/gal 5-9 drums - $3.40/gal 10-44 drums - $3.30/gal >44 drums - $3.20/gal	Same as Compound SP-301	Same as Compound SP-301 Application lasts 1 to 5 years
	Coal Tarp	$0.75-$1.00/gal	Designed for use in coal industry: coating over rail cars, trucks to prevent transportation losses etc. Prevents seed germination.	
Grass Growers P. O. Box 584 Plainfield, NJ 07061 201-755-0923 Mr. Elsner	Tarratack-1	$2.25/lb	Mulch binder used for stabilizing any type of grass to be grown.	5 lb: 250 gal water, mixed with wood fiber mulch (40 lb/acre) 5 lb: 150 gal water, mixed with hay or straw (40 lb/acre)
	Tarratack-2	$2.75/lb	Same as Tarratack-1	Mixed with hay or straw 40 lb/acre
	Tarratack-3	$3.25/lb	Same as Tarratack-1	Mixed with wood fiber only

[a] Mention of company or product names is not to be considered as an endorsement by the U.S. Environmental Protection Agency.

Table B-1 (continued). CHEMICAL DUST SUPPRESSANTS, THEIR COST, USES, AND APPLICATION RATES[a]

Company/address phone/contact	Product name/ product type	Cost	Uses/comments	Density, dilution and application rates
Enzymatic Soil of Tucson 6622 N. Los Arboles Cr. Tucson, Arizona 85704 602-297-2133 Mr. Bob Mundell	Enzymatic SS	55 gallon drums $7.60/gallon	Hold down dust on haul roads, tailings, stock pile. Will retard growth of weeds or plants. Seal lakes, stock tanks, stabilize odors around stock pens.	8.34 lb/gal 1:1000 1000 gallon/20 to 30 yd^3
Asphalt Rubberizing Corp. 1111 S. Colorado Blvd. Denver, Colorado 80222 303-756-3012 Mr. Jewell Benson	Peneprime Low-viscosity, special hard-base asphalt cutback	10,000 gal lots $0.45/gal	Control of wind, rain, or water erosion of soils. Applied to roads and streets to allay dust and stabilize surface to carry traffic. Does not allow seed germination. Very light applications (0.2-0.4 G.S.Y. may accelerate seed germination due to warming of black surface. Applications above 0.4 G.S.Y. inhibit plant growths through hardness and toughness of the crust formed. Plant growths through the crust may be further inhibited by addition of several oil-soluble sterilants. Sterilants kill plant as it emerges. The material may be applied at temperatures as low as 75°F by conventional asphalt distribution equipment.	0.85 S.G. dust abatement - 0.2 gal/yd^2 erosion control - 0.5-1.0 gal/yd^2

[a] Mention of company or product names is not to be considered as an endorsement by the U.S. Environmental Protection Agency.

Table B-1 (continued). CHEMICAL DUST SUPPRESSANTS, THEIR COST, USES, AND APPLICATION RATES[a]

Company/address phone/contact	Product name/ product type	Cost	Uses/comments	Density, dilution and application rates
E. F. Houghton & Co. Valley Forge Tech. Center Madison & Van Buren Ave. Norristown, PA 19401 215-739-7100 Mr. Todd Sutcliffe	Surfax 5107	55 gallon drums 1-4 drums - $4.44/gal 5-9 drums - $4.41/gal 10-39 drums - $4.38/gal >39 drums - $4.35/gal	Coal loading, quarries, cement plants, crushers, sintering plants.	8.5 lb/gallon 1:1000 or higher
	Rezosol 5411-B Polymer	55 gallon drums 1-4 drums - $0.415/lb 5-9 drums - $0.41/lb 10-39 drums - $0.405/lb >39 drums - $0.40/lb	Storage piles, railcars, road sides.	8.75 lb/gal 1:30 40 gal/1000 ft^2, recommended 2 applications
Monsanto 800 N. Lindbergh Blvd. St. Louis, MO 63166 314-694-3453 Mr. James A. Cooper	Gelvatol 20-90 Polyvinyl alcohol resin	50 lb/bags 500 lb - $0.905/lb 2,000 lb - $0.80/lb 10,000 lb - $0.77/lb 30,000 lb - $0.74/lb >30,000 lb - <$0.725/lb	Surfactant and protective colloid in emulsion polymerization.	30-40 lbs/ft^3 10 to 20 percent by weight
	Gelva Emulsion S-55 Polyvinyl acetate homopolymer	55 gallon drums 1-3 drums - $0.27/lb 4-19 drums - $0.26/lb >19 drums - $0.25/lb Bulk - $0.205/lb	Adhesives	500 lb/55 gallon drum 1% by weight
Air Products & Chemicals, Inc. 5 Executive Rd. Suedesford Road Wayne, PA 19087	Vinol 540 Polymer (water soluble)	50 lb bags 500 lb - $0.80/lb 2,000 lb - $0.77/lb 10,000 lb - $0.74/lb 32,000 lb - $0.725/lb 120,000 lb - $0.72/lb	Two grades: 1) soluble in water (washed away with rain), 2) relatively insoluble in water.	1 to 7 percent by weight Slurried in cold water or heated to insure complete mixture in solution
Union Carbide Corp. West St. & Madisonville Rd Cincinnati, Ohio 45227 513-292-0206 Mr. Wm. Mike Brown	DCA-70		Stabilize steep grades, tailings ponds. Not for vegetation growth.	9.25 lb/gal 2:1

[a] Mention of company or product names is not to be considered as an endorsement by the U.S. Environmental Protection Agency.

Table B-1. CHEMICAL DUST SUPPRESSANTS, THEIR COST, USES, AND APPLICATION RATES[a]

Company/address phone/contact	Product name/ product type	Cost	Uses/comments	Density, dilution and application rates
Dow Chemical Co. 2020 Dow Center Midland, Mich. 517-636-1000 Mr. Harold Filter	XFS - 4163L Styrene-Butadiene	55 gallon drums 1 drum - $2.65/gal 25 drums - $2.15/gal Bulk - $1.90/gal	Mulches such as straw, wood cellulose fiber, and fiberglass. Used to prevent wind loss of mulches during stabilization periods such as reseeding periods.	8.5 lbs/gal. 40 gallons XFS - 4163L: 360 gallons water 400 gallons/acre
Witco Chemical Corp. Golden Bear Division Post Office Box 378 Bakersfield, Calif. 93302 805-399-9501 Mr. William Canessa	Coherex Cold water emulsion of Petroleum Resins	55 gallon drums 1-10 drums - $0.65/gal >10 drums - $0.63/gal Bulk - $0.38/gal	Unpaved haul roads and stockpiles. Can be used around human or animal habitats - very clean - no heat required. Can be stored for 12 months or longer. Must be protected from freezing - unless freeze stable type is used. Can be spread through any type of equipment used to spread water.	8.33 lb/gal. 1:4 dilution, 1-1.5 gal/yd^2 for parking lots and dirt roads. 1:7 dilution 0.5 to 1 gal/yd^2 for thin layer or loose dirt, light traffic, service roads. 1:10 dilution for aid in packing surface
	Semi-pave Cold asphalt cutback with antistrip agent	55 gallon drums 1-10 drums - $0.68/gal >10 drums - $0.64/gal Bulk - $0.39/gal	Penetration of unpaved areas - low traffic volume roads - parking lots etc. Can be handled without heat if ambient temperature is 50°F or higher.	250 gallons/ton 0.6 to 0.8 gal/yd^2
American Cyanamid Wayne, New Jersey 07470 201-831-1234 Mr. L. S. Randolph	Aerospray 52 binder	55 gallon drums 1-4 drums - $0.69/lb 5-11 drums - $0.66/lb 12-22 drums - $0.63/lb 23-53 drums - $0.61/lb >53 drums - $0.59/lb Bulk - $0.55/lb	Seed membrane protection, excavation, construction, slope stabilization	8.8 lb/gallon 2:1 1 gallon/100 ft^2

[a] Mention of company or product names is not to be considered as an endorsement by the U.S. Environmental Protection Agency.

APPENDIX B
LISTING OF CHEMICAL DUST SUPPRESSANTS

Appendix B contains two separate listings of chemical suppressants. Table B-1 presents limited information on various chemical suppressants concerning product type, costs, uses, and application rates. Information was obtained from contractor in-house files and follow up questionnaires to several of the chemical producers. Information presented is as complete as was made available by the producers. Table B-2 presents a partial lists of selected soil stabilizing chemicals and their resultant control efficiencies.

The reference to or mention of manufacturers and their products in Tables B-1 and B-2 does not constitute an endorsement of such manufacturers or their products by the U.S. Environmental Protection Agency.

APPENDIX B

LISTING OF CHEMICAL DUST SUPPRESSANTS

Process Emission Source - One or more units of processing equipment which may be operated independently of other parts of the operations at any given manufacturing or processing facility and which may emit smoke, particulate matter, gaseous matter or other air contaminent. Also, where it is common practice to group more than one unit of like or similar processing equipment together and to apply a single or combined unit of air pollution control equipment to the emissions of the entire group.

Reasonably Available Control Technology (RACT) - On existing stationary sources, the extent of emission control technology determined by case-by-case analyses to be economically and technologically reasonable requirements for emission control.

Re-Entrainment - The resuspension in the atmosphere of particles from streets, rooftops, etc. by wind, passing vehicles or other such forces.

Reference Conditions - EPA requires that all measurements of air quality be corrected to a reference temperature of 25°C and to a reference pressure of 760 millimeters of HG(1,013.2) millibars.

Settleable Particulate - Particulate matter which is emitted into the atmosphere such that it may deposit onto horizontal surfaces due to gravitational settling.

State Implementation Plan (SIP) - A document prepared by each state, as required by the Clean Air Act, describing existing air quality conditions and setting forth a program to attain and to maintain National Ambient Air Quality Standards.

Stationary Source - Any building, structure, facility, or installation which emits or may emit any air pollutant and which contains any one or combination of the following: (1) affected facilities, (2) existing facilities, and (3) facilities of the type for which no standards have been promulgated.

Suspended Particulate - Particulate matter which will remain airborne for an appreciable period of time.

Total Suspended Particulates (TSP) - A criteria pollutant for which National Ambient Air Quality Standards have been established.

National Ambient Air Quality Standards (NAAQS) - A legal limit on the level of atmospheric contamination necessary to protect against adverse effects on public health and welfare. Primary standards are those related to health effects. Secondary standards are related to protection against adverse welfare effects.

New Source - Any stationary source, the construction or modification of which is commenced after proposal of any applicable regulation.

Nuisance - Whatever is injurious to health, indecent, or offensive to the senses, or an obstruction to the free use of property, so as essentially to interfere with the comfortable enjoyment of life or property.

Opacity - The degree to which emissions reduce the transmission of light and obscure the view of an object in the background.

Particulate Matter/Particulate - A finely divided solid or liquid material, other than uncombined water, as measured by a Federal reference method. Particulate matter in the ambient air is most often measured by the high-volume sampling technique and expressed in concentration units of $\mu g/m^3$. See Total Suspended Particulate (TSP).

Particle Size - An expression for the size of liquid or solid particles expressed as the average or equivalent diameter.

Particle Size Distribution - The relative percentage of weight or number of each of the different size fractions of particulate matter.

Point Source - A source of pollutant emission specifically identified in an emission inventory, as opposed to area sources, which are dealt with by summing the emissions of numerous smaller sources. A point source is often defined by the Environmental Protection Agency reporting requirement as a source that emits more than 100 tons per year of any one pollutant.

Process - Any action, operation or treatment, and all methods and forms of manufacturing, fabricating or handling.

High Volume Sampler (Hi-Vol) - A device for collecting fine suspended particulate matter by drawing air through a filtering medium. The Federal Reference Method for Total Suspended Particulates.

Impactor - A sampling device that employs the principle of impaction (impingement). The cascade impactor is a specific instrument that employs several impactions in series to collect successively smaller sizes of particles.

Instantaneous Sampling (Grab Sampling) - Obtaining a sample in a very short period of time, such that this sampling time is insignificant in comparison with the duration of the operation or the period being sampled.

Intermittent Sampling - Sampling successively for limited periods of time throughout an operation or for a pre-determined period of time. The durations of sampling periods and of the intervals between are not necessarily regular and are not specific.

Line Source - A source of air pollutants as may be depicted in a diffusion model by a straight line configuration. Examples are streets, highways, closely-spaced multiple stacks, airport runways, and aircraft flight paths.

Membrane Filter - Controlled pore filters commonly composed of cellulose esters. They can be manufactured with uniformly controlled pore size. Nylon mesh may be used for reinforcement. Types commonly used for air sampling have a pore size of about 0.45 to 0.8 microns. The pores constitute 80 to 85 percent of the filter volume. Because of electrostatic forces and the formation of a precoat of collected particles on the surface, these filters can collect particles down to about 0.1 microns in diameter.

Mixing Height - Height to which a pollutant can be expected to mix vertically as determined by the lapse rate and/or turbulence.

Model/Modeling - A mathematical or physical representation of an observable situation. In air pollution control, models afford the ability to predict pollutant distribution or dispersion from identified sources for specified weather conditions.

Emission Standard - A part of a legally enforceable regulation setting forth an allowable rate of emissions into the atmosphere or prescribing equipment specifications for control of air pollution emissions.

Equivalent Method - Any method of sampling and analyzing for air pollutant which has been demonstrated to the administrators satisfaction to have a consistent and quantitatively known relationship to the reference method under specified conditions.

Existing Facility - With reference to a stationary source, any apparatus of the type for which a standard applies and the construction or modification of which was commenced before the date of proposal of that standard, or any apparatus which could be altered in such a way as to be of that type.

Federal Reference Method (FRM) - Any method of sampling and analyzing for an air pollutant, as established by the U.S. Environmental Protection Agency, in the appropriate Part of Subchapter C - Air Programs of Chapter 1 - Environmental Protection Agency of Title 40 Protection of the Environment.

Fugitive Dust - A type of particulate emission made airborne by forces of wind, man's activity or both, such as unpaved roads, construction sites, tilled land or windstorms.

Fugitive Emissions - Particles which are generated by industrial or other activities and which escape to the atmosphere not through primary exhaust systems, but through openings such as windows, vents or doors, ill-fitting oven closures, or poorly maintained equipment.

Ground Level Concentration - The mass per unit volume of solid, liquid, or gaseous material in micrograms per cubic meter of air, measured from 0 to 2 meters above the ground.

Hazardous Air Pollutant - Under Section 112 of the Clean Air Act, an air pollutant to which no ambient air quality standard is applicable and which may cause, or contribute to, an increase in mortality or an increase in serious irreversible, or incapacitating reversible illness.

Control Agency (Air Pollution) - State or local agencies with designated authority as official air pollution control bodies for those areas.

Control Program - Those activities and functions within a broader program of air resource management that collectively are directed toward the reduction of excessive emissions of pollutants; the regulatory aspects of an air resource management program.

Control Strategy - A combination of measures designated to achieve the aggregate reduction of emissions necessary for attainment and maintenance of National Ambient Air Quality Standards.

Control Systems - Operating procedures or devices specifically designated to achieve the aggregate reduction of emissions necessary for attainment and maintenance of National Ambient Air Quality Standards.

Control Systems - Operating procedures or devices specifically designed and maintained for the purpose of reducing the amount of air pollutants emitted to the atmosphere.

Effective Stack Height - The height above the ground at which the emission plume becomes essentially level.

Emission Control Equipment - Equipment used to control emissions of air pollutants by either collection of the pollutants or conversion of them to less objectionable forms.

Emission Factor - An estimate of the rate of which a pollutant is released to the atmosphere as a result of some activity such as combustion or industrial production, divided by the level of activity.

Emission Inventory - A compilation of all emissions for a specified area. The inventory is broken down into various source categories, which may be further subdivided to give a very accurate picture of the sources of air pollution in the area.

Emission Point/Discharge Point - The point of temporary, intermittent, or continuous release of foreign matter to the air, or matter that is common to the air but in an amount, form, or location such as to give the common matter special significance.

Alternative Method - Any method of sampling and analyzing for an air pollutant which is not a reference or equivalent method but which has been demonstrated to the administrators satisfaction, in specific cases, to produce results adequate for his determination of compliance.

Ambient Air - That portion of the atmosphere, external to buildings, to which the general public has access.

Area Source - A category of emitters that are individually minor but sufficiently numerous and widespread that their combined emissions are significant, i.e., automobiles.

Background Concentration/Background Level - Ambient concentrations which are caused by natural sources of pollution. In some cases, background may also include man-made pollutants advected into the area. Background is often used to denote those concentrations which are uncontrollable, either because they are of natural origin or because they are transported from another area not subject to the jurisdiction of the air pollution control agency.

Best Available Control Technology (BACT) - The best system of emission reduction which (taking into account the cost of achieving such reduction) the administrator determines has been adequately demonstrated.

Collection Efficiency - The percentage of a specified substance, gaseous or particulate, retained on passage through a sampling device or emission control equipment.

Collector - A device for removing and retaining contaminants from air or other gases. Usually this term is applied to cleaning devices in exhaust systems.

Compliance Schedule - A legally enforceable schedule specifying a date or dates by which a source or category of sources must comply with specific emission standards contained in a plan or with any increments of progress to achieve such compliance.

APPENDIX A

GLOSSARY OF PERTINENT TERMS

Following is a tabulation of key terms which will be utilized throughout this guidance document. By no means is this listing intended to be all-inclusive of the entire body of air pollution terminology. Definitions are supplied in order to clarify our intended meaning as well as to prevent possible misconceptions.

Administrator - Administrator of the U.S. Environmental Protection Agency or his authorized representative.

Aerosol - A dispersion of solid or liquid particles of microscopic size in a gaseous medium, such as smoke, fog or mist.

Affected Facility - With reference to a stationary source, any apparatus to which a standard is applicable.

Air Quality Control Region (AQCR) - The basic geographic area on which air pollution control strategies are formulated. The AQCR boundries are designated as much as possible to be consistent with the air shed concept. That is, the sources in a given area share a common air mass and the air quality is a result of the emission contribution of all the sources in that area. EPA, assisted by the states, has divided the country into 247 AQCR's. A region may cover only part of one state or it can include portions of several states which share a common air pollution problem.

Air Quality Maintenance Plan (AQMP) - A control strategy designed to ensure that once an air quality standard is attained, pollutant levels will not increase to levels that would again exceed the prescribed air quality standard. Part of the State Implementation Plan.

APPENDIX A

GLOSSARY OF PERTINENT TERMS

9. Fugitive Dust in Kansas and Nebraska. PEDCo-Environmental Specialists, Inc., Cincinnati, Ohio. EPA Contract No. 68-02-0044, Task Order No. 14. February 1974.

10. Analysis of Suspended Particulate Sampling Sites in South Dakota AQMA's. PEDCo-Environmental Specialists, Inc., Kansas City, Missouri. EPA Contract No. 68-02-1375, Task Order No. 19. December 1975.

REFERENCES FOR SECTION 5.0

1. McCutchen, Gary D., U.S. Environmental Protection Agency. Paper presented at the "Symposium on Fugitive Emissions," Hartford, Connecticut. May 17-19, 1976.

2. National Assessment of Particulate Problem, Volume I, National Assessment, U.S. Environmental Protection Agency, Research Triangle Park, North Carolina, GCA-TR-76-25-G(1). July 1976.

3. Guidelines for the Evaluation of Air Quality Data, U.S. Environmental Protection Agency, Research Triangle Park, North Carolina, OAQPS No. 1.2-015. 1975.

4. Guidelines for the Evaluation of Air Quality Trends, U.S. Environmental Protection Agency, Research Triangle Park, North Carolina, OAQPS No. 1.2-014. 1975.

5. Guidelines for Air Quality Maintenance Planning and Analysis Volume II, "Air Quality Monitoring and Data Analysis." Report No. EPA-450/4-74-012. U.S. Environmental Protection Agency, Research Triangle Park, North Carolina. September 1974.

6. Analysis of Probable Particulate Non-Attainment in the Kansas City AQCR. PEDCo-Environmental Specialists, Inc., Cincinnati, Ohio. EPA Contract No. 68-02-1375, Task Order No. 26. February 1976.

7. Guidelines for Technical Services of a State Air Pollution Control Agency, U.S. Environmental Protection Agency, Research Triangle Park, North Carolina, APTD-1347. November 1972.

8. Development of Emission Factors for Fugitive Dust Sources, U.S. Environmental Protection Agency, Research Triangle Park, North Carolina. Publication Number EPA-450/3-74-037. June 1974.

absolutely necessary to obtain an accurate sample. Changes in methodology must be based on sound engineering judgment and must be carefully documented. Standard procedures which should receive particular attention include:

(a) Location of sampling station(s),

(b) Records of meteorological conditions,

(c) Use of recommended sampling equipment,

(d) Careful determination of gas flow rate and sample time,

(e) Noting of any unusal conditions which may affect sample,

(f) Proper handling of the collected sample and recording of container and filter numbers.

5.6.4 Specified Performance Standards

Specific regulations listing operating conditions or control techniques are relatively easy to enforce. Since this regulatory approach is most effective when applied to specific sources, communication with industry and trade associations may be helpful in assessing reasonable control technologies. There easily may be conditions or control techniques peculiar to certain areas of the country and certain types of sources. Similarly, it may be useful to have industry trade associations comment on regulations early in their development.

Section 5.5 presents a series of "model" regulations applicable to IPFPE sources. The reasonable precautions set forth in the model regulation are intended only as a general guideline and should not be relied upon for enforcement purposes. The main thrust of the regulation is the provision for agency approval of control techniques of each source and the incorporation of conditions into operating permits.

have the details of each reading memorized. In fact, it is preferable that the observer prepare observation record forms at or near the time of the events in question to which he can refer at the time of trial. The original forms are admissible in evidence and aid in substantiating a violation. Photographs are also useful in showing meteorological and topographical conditions around the emission source at the time of the event. In addition, if there is any steam present, the pictures can show where it dissipates. The observer should read a wet emission at the point of dissipation.

5.6.3 Fence-Line Regulation

In implementing and enforcing a fence-line or upwind-downwind regulation, every test should be conducted as if it will ultimately be used as evidence in court. The collection and analysis of jurisdictional samples should become a routine matter to the agency personnel involved. However, it must be remembered that this routine procedure is esoteric to the layman and, therefore, is subjected to greater scrutiny whenever the agency has to rely on these results. It is imperative that sampling and analysis be done under standard procedures and that each step be well documented. In short, the report may ultimately be subjected to the requirements of the Rules of Evidence.

In attacking the validity of the sampling results, the adverse party will concentrate on four main items relative to taking the sample: (a) the sampling procedure, (b) the recorded data and calculations, (c) the test equipment, and (d) the qualifications of the test personnel.

The agency must keep in mind the possibility of adverse inferences that may arise from the use of unorthodox or new procedures. Therefore, deviations from the standard procedure must be kept to a minimum and applied only where

- establishing the legal validity of the visible emission standard
- presenting the method by which observers are trained
- presenting testimony of the observer who made the readings by which a particular source is found in violation

The legal validity of existing opacity regulations is well established in view of the many state and local air pollution control programs throughout the country which have adopted opacity regulations and the large number of court cases which have upheld opacity standards. There is every reason to believe that the model visible emission regulation would fare at least as well in the courts since the regulation largely eliminates one of the major objections raised by critics of the opacity standard. By prohibiting all visible emissions, the model visible emission regulation does not require an observer to numerically evaluate the opacity of an emission and thereby eliminates the subjectivity inherent in such observations.

In enforcement actions, it is imperative to demonstrate that the observer had the proper foundation and training to make accurate readings. While this evidence will be less significant in actions involving the model visible emission regulation, it is, nonetheless, essential that the observer's expertise and objectivity be firmly established. One method of presenting these data is through the testimony of a smoke school instructor setting out in detail how smoke schools are conducted and observers trained. Testimony should emphasize that opacity and visible emission readings are based on specialized training rather than haphazard guesses.

The testimony of the observer is the major thrust of an enforcement action. It is not necessary that the observer

- Section 2. (1) The attorney general, any political subdivision of the state, any instrumentality or agency of the state or of a political subdivision thereof, any person, partnership, corporation, association, organization or other legal entity may maintain an action in the circuit court having jurisdiction where the alleged violation occurred or is likely to occur for declaratory and equitable relief against the state, any political subdivision thereof, any instrumentality or agency of the state or of a political subdivision thereof, any person, partnership, corporation, association, organization or other legal entity for the protection of the air, water and other natural resources and the public trust therein from pollution, impairment or destruction.

- Section 4. (1) The court may grant temporary and permanent equitable relief, or may impose conditions on the defendant that are required to protect the air, water and other natural resources or the public trust therein from pollution, impairment or destruction.

5.6 EVALUATION OF ENFORCEMENT PROCEDURES

5.6.1 Nuisance Regulations

Nuisance regulations have been found ineffective in providing a comprehensive control program for fugitive particulate emissions from industrial processes. This type of regulation can be useful in cases where the emission source can be specifically identified and when the source is agreeable to minimizing emissions. However, nuisance regulations are difficult to enforce since no general definition of nuisance exists and each case must be proved separately. If a nuisance regulation is deemed desirable, however, the regulation should state what acts constitute a nuisance by, for example, specifying necessary operating conditions.

5.6.2 Visible Emission Regulations

A major advantage of a visible emission regulation is its relative ease of enforcement. There are only three basic elements involved in proving an opacity violation:

5.5.4 Enforcement Techniques

Violation of the air pollution control regulations may be penalized under the criminal code or enforced by a civil suit. Michigan, for example, uses both types of enforcement techniques. While the criminal code makes it possible for an Agency to react quickly to a violation, it does not directly prevent further violations. A civil suit is more time consuming but allows both temporary and permanent injunctions against further violations. The civil suit has been successfully used in Michigan to address the pollution problem of an industrial complex as a whole. Such actions are often settled by a consent order.

Below is a partial abstract from the Air Pollution Control Regulation of Wayne County, Michigan.[2]

- Section 14.1 Penalties: Any person or any person acting in behalf of said person in an employee, agency, or contractural relationship violating any of the provisions of this Regulation shall upon conviction be subject to a fine or imprisonment or both as provided by law.

- Section 14.3 Injunctive Proceedings: Whenever any person has been found to have repeatedly violated provisions of Article VI of this Regulation, the Director may upon written approval of the Board of Health commence appropriate civil legal action in a court of competent jurisdiction in the name of the County to enjoin and restrain further continuance of such violation.

The state of Michigan enacted a civil statute in 1970 to protect the air, water and other natural resources. A partial abstract of that statute follows:[3]

---

[2] Wayne County Air Pollution Control Regulation, Article XIV.

[3] The Thomas J. Anderson Gordon Rockwell Environmental Protection Act of 1970. State of Michigan.

Permit Regulation[1]

(b) Operating Permits.

(1) New Emission Sources and New Air Pollution Control Equipment:

Prohibition. No person shall cause or allow the operation of any new emission source or new air pollution control equipment of a type for which a Construction Permit is required by paragraph (a) of this Rule 103 without first obtaining an Operating Permit from the Agency, except for such testing operations as may be authorized by the Construction Permit. Applications for Operating Permits shall be made at such times and contain such information (in addition to the information required by paragraph (b) (3) of this Rule 103) as shall be specified in the Construction Permit.

(2) Existing Emission Sources:

Prohibition. No person shall cause or allow the operation of any existing emission source or any existing air pollution control equipment without first obtaining an Operating Permit from the Agency no later than the dates shown in the following schedule:

(7) Conditions. The Agency may impose such conditions in an Operating Permit as may be necessary to accomplish the purposes of the Act, and as are not inconsistent with the regulations promulgated by the Board thereunder. Except as herein specified, nothing in this Chapter shall be deemed to limit the power of the Agency in this regard. When deemed appropriate as a condition to the issuance of an Operating Permit, the Agency may require that the permittee adequately maintain the air pollution control equipment covered by the permit. To assure that such a maintenance program is planned, the Agency may require that the permittee have a maintenance program and keep such maintenance records as are necessary to demonstrate compliance with this Rule; provided, however, the Agency shall not have the authority to approve the maintenance programs required thereunder.

---

[1] Illinois General Air Pollution Regulation, Rule 103.

from operating any new or existing emission source without first obtaining an operating permit.

Performance Standard Regulation

(a) No person shall operate or maintain, or cause to be operated or maintained, any premise, open area, right-of-way, storage pile of materials, or any other industrial process that involves any handling, transporting, or disposition of any material or substance likely to be scattered by the wind, without taking reasonable precautions, as approved by the Agency, to prevent particulate matter from becoming airborne.

(b) In determining what is reasonable, consideration shall be given to factors such as the proximity of dust-emitting operations to human habitations and/or activities and atmospheric conditions which might affect the movement of particulate matter.

(c) Some of the reasonable precautions may include, but are not limited to, the following:

Application of asphalt, oil, water, or suitable chemicals to, or covering of dirt roads, material stockpiles, and other surfaces which can create dusts.

Installation and use of hoods, fans, and fabric filters or equivalent systems to enclose and vent the handling of dusty materials. Adequate containment methods should be employed during sandblasting or other operations.

Covering, at all times when in motion, open-bodied trucks transporting materials likely to give rise to airborne dusts.

Paving of roadways and maintaining them in a clean condition.

(d) In obtaining Agency approval under subsection (a) of this section, the Agency may impose any operating condition it deems necessary to attain and maintain compliance with the provisions of this section.

The broad "reasonable precaution" regulation has the advantage, however, of limiting a variety of common fugitive dust emissions from industrial processes which cannot be readily controlled under other types of regulations. Emissions from sources such as plant haul roads, storage piles, transfer points and waste disposal sites are not amenable to either visible emission regulations or fence-line measurements. Visible emissions are virtually impossible to eliminate from sources such as these, and fence-line measurements cannot accurately identify the impact these sources will have when other emission sources are present.

Regulations specifying control equipment are generally effective only when directed at particular industries and emission sources. These regulations are inflexible to changing control technologies, and industries often hesitate to install additional control equipment if the existing control equipment required by the regulation is inadequate. These disadvantages can be largely avoided, however, by permitting the Agency to specify control equipment and operating conditions as a condition to obtaining construction and operating permits. The periodic renewal of these permits will allow the Agency to monitor fugitive emission sources in each industry and update the control techniques required to meet ambient air standards.

The following model regulation is a combination of existing regulations and is intended to avoid many of their disadvantages while retaining the advantages. It is directed primarily at common fugitive dust sources from industrial processes, but may also be applied to the broad range of fugitive particulate emissions from industrial processes.

Also included is a portion of the Illinois General Air Pollution Regulation, Rule 103, which prohibits any person

Definitions

Downwind Level - The concentration of air contaminants from a source or sources on a property as measured at or beyond the property boundary.

Net Ground-Level Concentration - The upwind level subtracted from the downwind level.

Upwind Level - The representative concentration of air contaminants flowing onto or across a property as measured at any point.

5.5.3 Specified Performance Standards

Performance standards are specifications as to the ways certain fugitive emission sources should be constructed or operated. This concept evolves from the fact that there are no feasible ways to measure the amount of dust being emitted by most fugitive dust sources, hence no way to establish quantitative emission standards for those sources. As a result, the concept suggests that ways of controlling emissions should be specified rather than allowable amounts of emissions.

Performance standards suffer from the fact that they either require a very detailed, not readily available, and constantly changing knowledge of source-receptor relationships or else they are so vague as to almost mean all things to all people. Where adopted, however, they are easily and objectively enforced by visual observation and scanning of maintenance records.

The "reasonable precaution" regulation suggested by the EPA and adopted by most states sets forth several control techniques for general application. This type regulation is difficult to enforce since reasonable precautions are not specifically defined. It is particularly difficult to apply when a company has attempted to control a source but the controls are inadequate, because it must be proven that the precautions were not reasonable.

This analysis will indicate whether or not fugitive emissions are a significant percentage of the total emissions. This analysis, however, cannot indicate what quantity each fugitive source contributed to the air quality at the perimeter, but serves only as an indicator that a fugitive emissions problem exists.

In performing this type of analysis, Texas requires the following information:

- layout or map of source processes,
- process descriptions (emission estimates and control efficiencies),
- location of samplers with respect to the source,
- concurrent upwind and downwind perimeter hi-vol samples,
- associated meteorological data (wind speed and direction),
- any operations which may significantly bias a given sampler.

The following upwind-downwind model regulation and definitions are patterned after the Texas regulation:

Upwind-Downwind Regulation

No person may cause, suffer, allow, or permit industrial process fugitive particulate emissions from a building or unenclosed process operation to exceed any of the following net ground-level concentrations:

105.21 One hundred (100) micrograms per cubic meter ($\mu g/m^3$) of air sampled, averaged over any five (5) consecutive hours.

105.22 Two hundred (200) micrograms per cubic meter ($\mu g/m^3$) of air sampled, averaged over any three (3) consecutive hours.

105.23 Four hundred (400) micrograms per cubic meter ($\mu g/m^3$) of air sampled, averaged over any one (1) hour period.

particularly important that careful records be maintained on the standards and frequency of equipment calibration, and limits should be placed on sampling methods in order to obtain creditable results.

An existing ambient air monitoring network can be used initially to determine two things: (1) the general air quality of the area and (2) the general location of the predominant sources of emissions. The general air quality is determined by taking the annual arithmetic or geometric mean of all samples taken at each site. The general location of predominant sources is determined by observing the pollution roses of all sampling sites. The largest pollution gradients of each rose will extend toward the sources having the most significant effect on each site. Care should be taken to use only days of persistent wind in pollution roses in order to be sure that the measured concentrations are representative of the contributions from sources in each direction. It can also be determined whether or not specific sources contribute to concentrations measured at a given site by use of a tracer.

A suspected polluter will warrant more detailed sampling of its emissions. Typically, samplers are located on the perimeter of the plant property at points directly upwind and downwind of the source. The total contribution of the source to the local air quality is determined by taking the difference of concurrent samples at these upwind/downwind sites. Process emissions can be evaluated at the source by using methods outlined in AP-42. The impact of these emissions can then be estimated at the downwind sampler by modeling. This calculated impact is subtracted from the value previously obtained from the perimeter samplers resulting in an estimate of the impact of fugitive emissions from the source at the downwind sampler.

Visible Emission Regulation

(1) Industrial process fugitive particulate emissions shall be controlled so that there are no visible emissions at least 90 percent of the time from any building or unenclosed process operation, except

(a) A visible emission of an opacity more than 20% shall not be permitted.

(b) This rule shall not apply where the presence of uncombined water vapor is the only reason for failure of an emission to meet the requirements of this rule.

(c) This rule shall not apply where specifically permitted by the commission in a case where compliance is not feasible and all other requirements of the commission's rules are being met.

5.5.2 Fence-line Air Quality Measurements

Air quality measurements assess the impact of sources of fugitive air emissions upon air quality. They can be measured either with dust-fall jars for settleable particulates, high-volume samplers for suspended particulates, or paper-tape samplers for the soiling properties of the emitted dust. Where high-volume samplers are used, the source's impact can be directly related to the national ambient air quality standards.

Air quality measurements are excellent for obtaining objective and court-enforceable comparisons with a standard, and, with sufficient amounts of air quality data, can be directly related to ambient air quality standards. Their chief drawbacks are that they require a relatively large commitment of scarce resources and that they do not provide sufficient information to differentiate the impact of one operation from another within a source.

For scientific and legal purposes, all samples and their analyses should be carefully documented. It is

The most common objections to the use of equivalent opacity are:

(1) The opacity observed is a subjective measurement varying with the position of the observer in relation to the sun and sky, size of particles in the plume, atmospheric lighting and background of the plume.

(2) Opacity has not as yet been successfully correlated in detail with other methods of measurement.

(3) Difficult to use in hours of darkness.

(4) Water droplets interfere with the observations.

Existing visible emission type regulations are of two types. General visible emission regulations usually limit the opacity of emission to a given percentage. Fugitive dust regulations, however, often prohibit all visible emissions from crossing the property line. By eliminating the necessity for evaluating the opacity of an emission, the fugitive dust regulation is less subjective and more easily enforced.

The following model opacity regulation is based on the approach being considered for a New Source Performance Standard for the crushed and broken stone industry. It differs from existing fugitive visible emission regulations in that it prohibits all visible emissions only 90 percent of the time. The restriction that there be no visible emission from the capture system for 90 percent of the time is based on calculations from data obtained by qualified observers at best-controlled plants. In addition, it is intended that measurements be made at the source rather than at the property line.

particulate matter emitted by such a source. Implied in such a concept is the assumption that there is a similar relationship between opacity and ambient concentrations of particulate matter.

From the standpoint of the responsible air pollution control agency, some of the advantages of the use of visible emission control regulations are:

(1) The validity of the equivalent opacity concept has been well established by the courts.

(2) Observers can be trained in a relatively short time and it is not necessary that observers have an extensive technical background.

(3) No expensive equipment is required.

(4) One man can make many observations per day.

(5) Violators can be cited without resorting to time-consuming source testing.

(6) Questionable emissions can be located and the actual emissions then determined by source tests.

(7) Although it is usually not possible to quantify the reduction in total air pollution by the control of visible emissions, it is reasonable to assume that there will be a reduction in the discharge to atmosphere of dusts.

(8) Control can be achieved for operations not readily suitable to regular source testing methods such as dust and other leakage from process equipment, and bulk loading or unloading of dusty materials such as grains, coal, ores, etc.

(9) It would be unfair to many processes and operations if dust concentrations in the effluent gases were limited such that visible emissions would be eliminated.

revoke, modify, or refuse to renew or grant a permit under the following conditions: (i) the requirements of their Section II. D. have not been met; (ii) the approved compliance or prevention plan has not been followed as determined by the Division, or (iii) the permit conditions are not met." Thus, Colorado bases its assessment of compliance on whether or not the source is performing those easily observable actions that is has said in writing that it will do. This type of regulatory approach is very effective in controlling fugitive process emissions near major sources and where the principal contributors can be identified.

All states have mechanisms whereby sources may obtain variances from fugitive emission regulations or requirements for good and sufficient cause.

5.5 MODEL REGULATIONS

The Model Regulations set forth below are based on existing regulations and regulatory approaches which have been modified to apply to fugitive particulate emissions from industrial processes. No fugitive emission regulation, however, will be adequate to control all types of fugitive particulate emissions and, consequently, no specific model regulation is recommended. These regulations are presented for illustration and guidance purposes only. An agency should use the regulatory approach most applicable to the specific situation it is trying to control within its jurisdiction.

5.5.1 Visible Emission from Identifiable Sources

Opacity limitations relate to the optical properties of emitted particulate matter and assume that there is a meaningful relationship between the light-obscuring properties of the particulate matter emitted by a fugitive dust or fugitive emission source and the mass-per-unit time of

Mississippi establishes 5.25 g/m^2/month as the amount above background that may not be exceeded. Missouri establishes four different standards (without reference to background):

1.	TSP	80 $\mu g/m^3$	6-month geo mean
		200 $\mu g/m^3$	2-hour arith mean for not less than 5 2-hour sampling periods
2.	Soiling index	0.4 coh/1000 ft	6-month geo mean
		1.0 coh/1000 ft	8-hour arith mean

Pennsylvania states that "no person shall cause . . . fugitive particulate matter to be emitted . . . if such emissions are . . . visible at the point such emissions pass outside the person's property and the average concentration, above background, of three samples, of such emissions at any point outside the person's property, exceeds 150 particles per cubic centimeter."

In two states, Illinois and Missouri, compliance is also assessed in terms of particle size. Missouri, for example, equates visibility of particulate matter (in the sense of opacity limitations) with finding particles larger than 40 microns in size present beyond the premises of origin.

Specific Operating Procedures - The fourth method of assessing compliance has already been briefly described in reference to the stipulation of control techniques in operating and construction permits. The provisions found in Colorado's regulation are indicative. That state's regulation is based upon permits, control plans, and plan and progress reports each of which stipulates the dust abatement and preventive measures that will be applied by the source. The regulations further state that "The Division may suspend,

Where

P = percentage increase

R = number of particles of fugitive dust measured at downwind receptor site

U = number of particles of fugitive dust measured at upwind or background site

Potential Respiratory Damage - If the fugitive dust is comprised of 50 percent or more respirable dust, then the percent increase of dust concentration . . . shall be modified as follows:

$$P_r = (1.5-N)\ P$$

Where

N = fraction of fugitive dust that is respirable dust

P_r = allowable percentage increase in dust concentration above background

P = no value greater than 67%

Ambient Air Concentrations - The ground level ambient air concentrations exceed 50 micrograms per cubic meter above background concentrations for a 60-minute period . . .

If the source is determined to be comprised of two or more legally separate persons, each shall be held proportionately responsible on the basis of contributions by each person as determined by microscopic analysis."

Kansas stipulates that "no person shall cause . . . a ground level particulate concentration at the property line equal to or exceeding 2.0 milligrams per cubic meter above background concentrations for any time period aggregating more than 10 minutes during any hour."

The Texas Air Control Board has stipulated that the minimum net difference between the two concentrations must be at least 100 $\mu g/m^3$ in order to demonstrate that a significant emission source is present. It also stipulates that if the difference is 100 to 200 $\mu g/m^3$ then the sampling period should be for 5 or more hours. If it is 200 to 400 $\mu g/m^3$, then the period should be at least 3 hours. If greater than 400 $\mu g/m^3$, then the averaging period should be at least 1 hour. They consider these ranges to be statistically reliable and legally defensible.

Nuisance and Property Line Concentrations - This technique is designed to help abate neighborhood-scale nuisance problems caused by specific fugitive emission sources, not city-wide ambient air quality ones. It has been found to be both legally defensible and--because of its quantitative nature--an effective abatement tool.

Other states have devised ambient sampling type regulations which are equally applicable to sources of fugitive process emissions and fugitive dust.

Hawaii, for example, stipulates that concentrations may not be more than 150 $\mu g/m^3$ (12-hour average) "above upwind" TSP concentrations or 3.0 g/m^2 (14-day average) above upwind dust-fall concentrations. Indiana has a complex regulation which says that a source will be in violation if a source or combination of sources cause:

> "concentrations greater than 67 percent in excess of ambient upwind concentrations as determined by the following formula:

$$P = \frac{100\ (R-U)}{U}$$

using a 5 percent visible emission regulation of this type to control specific fugitive sources.

Similarly, many states include in their regulations a general provision that bans any emission that is considered a nuisance or that endangers human health and welfare. Alabama's regulation is indicative: "When dust, fumes, gases, mist, odorous matter, vapors, or any combination thereof escape from a building or equipment in such a manner and amount as to cause a nuisance . . ., the Director may order that the building or equipment in which processing, handling, and storage are done be tightly closed and ventilated in such a way that all air and gases and air or gas-borne material leaving the building or equipment are treated by removal or destruction of air contaminants before discharge to the open air." This language is particularly useful for controlling fugitive emissions from industrial process, but citizen complaints and the agency's subjective judgment are needed to determine whether the source is a nuisance.

Ambient Sampling - Assessment of compliance is sometimes made through ambient sampling. Standards for particulate concentration or fallout at the property line are of particular value in controlling fugitive process emissions from specific industrial and commercial sources. Texas, for example, has successfully applied an upwind-downwind method to the control of fugitive sources. In essence this technique requires simultaneous measurement of ambient air particulate concentrations (using standard hi-vol techniques) at a minimum of two locations, one upwind and at least one other downwind of the source in question. Measurements are usually taken for periods ranging from 1 to 5 hours and are subsequently compared to maximum permissible downwind minus upwind concentrations for the applicable time period.

there is a variety of methods for determining how compliance with this objective is to be assessed.

States commonly employ two or more of the following strategies in combination:

- Ambient air sampling for total suspended particulate concentrations or dust fall concentrations.
- Visual observance for opacity of the dust produced by the source.
- Agency verification that performance standards are being complied with.
- Agency enforcement of "nuisance" regulations, whether initiated by citizen complaints or agency surveillance.

The regulation provided in 40 CFR 51 Appendix B does not directly address methods of assessing compliance other than in terms of requiring that emissions not exceed 20 percent opacity. Connecticut regulations, as a result, stipulate that, "No person shall cause or permit the discharge of visible emissions beyond the lot line of the property on which the emissions originate when: (i) the emissions remain visible and exist near ground level outside the property boundaries; or (ii) the emissions remain visible and impinge on a building or structure so that the health, safety, or enjoyment of life of the public may be diminished." Most states have adopted a variant of this regulation. In general, these standards may be made applicable to both fugitive process emissions and fugitive dust.

Visual Observance - In addition, most states have adopted general visible emission regulations which prohibit any visible emissions, without reference to the property line, which are greater than a stated opacity (generally 20%). These regulations may be construed to encompass fugitive emissions and at least one state has considered

for specific types of fugitive dust sources. In great detail, Colorado regulates unpaved roads and parking areas; earth and construction material moving and excavating; demolition, wrecking and moving of structures, and explosives detonation activities; open mining activities; and unenclosed operations.

These regulations require existing facilities to submit and implement specific control plans and progress reports, and require new facilities to obtain permits for construction and operation. The permits involve the submission of a substantial amount of information: a description of the activity, the abatement and preventive measures that will be used, a time schedule for the activities, and a description of the monitoring methods to ensure compliance.

Special abatement and preventive methods outlined by the regulations are more detailed than those in the EPA-suggested regulation, but essentially leave the choice of method to the source, with agency review and approval.

While the Colorado regulation is directed primarily at fugitive-dust-type sources, many states specify control techniques to control fugitive emissions from particular industrial processes. Alabama, for example, has adopted a regulation which requires both reasonable measures and specific control techniques for operating and maintaining coke ovens. As a condition for obtaining operating and construction permits, Michigan and Illinois often require particular industries to stipulate "formalized maintenance programs." These often contain limitations and control measures for fugitive emissions.

5.4.3 Compliance Methods

All fugitive dust regulations are designed to help achieve and maintain ambient air quality standards, but

what is reasonable, consideration will be given to factors such as the proximity of dust-emitting operations to human habitations and/or activities and atmospheric conditions which might affect the movement of particulate matter."

As a general rule, reasonable precaution regulations are more effective in dealing with diverse sources of fugitive dust than with particulate sources of fugitive process emissions. This approach affords an agency administrator the discretion needed to deal with a variety of sources, but it risks resulting in arbitrary and capricious decisions and being contested in court. Many states, in adopting the fugitive dust regulations, have incorporated language placing particular emphasis upon fugitive dust sources. Ohio, for example, has adopted a regulation which applies exclusively to persons who permit "materials to be handled, transported, or stored; or a building or its appurtenances or a road to be used, constructed, altered, repaired or demolished without taking reasonable precautions."

Some states, however, have adopted reasonable precaution type regulations to control fugitive emissions from industrial process. Vermont, for example, prohibits "any process operation to operate that is not equipped with a fugitive particulate matter control system" and empowers the Air Pollution Control Officer to order a building or equipment closed and ventilated so that all exhaust gases may be treated before discharge. Similarly, West Virginia requires a manufacturing process to be equipped with and maintain a fugitive particulate matter control system to minimize emissions.

5.4.2 Specific Control Regulations

Colorado provides the best example of a state which requires the implementation of specific control techniques

Where a distinction between fugitive process emissions and fugitive dust is made within a state regulation, it usually relates to one of the following:

- definition of fugitive dust,
- specification of control techniques,
- and methods of assessing compliance.

In some cases, a definition distinquishes between "fugitive emissions" from industrial processes and "fugitive dust" to reflect particular air pollution problems within the state. Arizona, for example, which has a significant windblown dust problem, defines "fugitive dust" as including all "uncontrolled dust." One of West Virginia's principal concerns is with particulate emissions from manufacturing processes and, hence, it provides an alternate definition: "'Fugitive Particulate Matter' shall mean any and all particulate matter generated by any manufacturing process which, if not confined, would be emitted directly into the open air from points other than a stack outlet."

5.4.1 Reasonable Precaution Regulations

Control techniques are usually defined in one of two ways: either reasonable precautions are required or specific control techniques are mandated. Reasonable precautions usually include those precautions suggested in the EPA regulation. The actual degree of control or extent of activity that is "reasonable" is, however, usually left to the discretion of the control agency personnel. Connecticut, for example, requires that, "Such reasonable precautions shall be in accordance with good industrial practice as determined by the Commissioner and shall include, but not be limited to, . . ." the precautions suggested in 40 CFR 51 Appendix B. Others, such as Idaho, try to be somewhat more precise. Idaho's regulations state that, "In determining

(4) The adequacy of existing regulations for implementing the control measures required by IPFPE sources. Included here is the problem of determining not only the effectiveness of current regulations but also the additional control which can be generated by revised or new regulations and enforcement procedures.

(5) The availability of techniques/models which will allow the agency, with some degree of confidence, to select the optimized control strategy for integration into their SIP process.

5.4 SUMMARY OF EXISTING REGULATIONS APPLICABLE TO INDUSTRIAL PROCESS FUGITIVE PARTICULATE EMISSIONS

Most states use a fugitive emission regulation pattered after the one contained in 40 CFR 51, Appendix B. This regulation does not distinquish between fugitive particulate emissions from industrial processes and fugitive dusts that become airborne due to the wind and man's activity on the land. Thus in most states the emission sources are combined into a single category which includes a solid, airborne particulate matter emitted from any source other than a stack. The basic state regulation recommends that "reasonable precautions" be taken to prevent this "fugitive dust" from becoming airborne and suggests some general techniques for achieving this goal including:

- watering or chemical application during construction activities,
- applying dust suppressant to roadways,
- installing hoods, ducts, etc. on industrial processes,
- covering truck bins,
- using sound agricultural practices,
- paving roads and keeping them clean,
- and prompt removal of dirt from roadways.

- In many nonattainment situations, increasing the stringency of existing regulations for stack or vented particulate emissions may result in a significantly greater cost impact than that required for control of IPFPE sources at the same facility. For example, increasing the control efficiency of an existing particulate collector from 97.5 to 99.5 percent is often not as cost-effective as reducing as much as 50 percent of the fugitive particulate emitted by the plant through the application of control options such as enclosure of open conveyors, hooding and ducting into existing controls, or collection and reentrainment into the process stream.

- Due to a general lack of attention, control techniques for most IPFPE have not been advanced to that stage of application wherein resultant control can be anticipated with good confidence. Thus, the door is open for the development of innovative control techniques and equipment design.

In summary, most of the revised SIP's dealing with control of IPFPE can probably best be developed on the basis of a source-by-source evaluation which leads to the development of an overall regulatory/enforcement program customized for the emission characteristics specific to each area. In so doing, the agency may be required to make certain judgments concerning the emission strength and control options for each source under consideration. These judgments will center around:

(1) The need to develop the best data possible. Ambient air quality concentration and specific source-related measurements of IPFPE will certainly enhance the quality of the analysis.

(2) The ability to identify the specific IPFPE sources which have, in fact, a significant impact on air quality nonattainment.

(3) The applicability of reasonably available control technology (RACT) for IPFPE sources which require control.

- Costs involved in controlling IPFPE can often be considerable, at least on a relative scale. For example, major expenditures are involved in controlled hooding and enclosure of a very dusty operation (such as ore handling and blending). While the enclosure, ducting, exit control device, and air moving system may result in an installation cost which may not appear unreasonable, the operating and maintenance costs for moving an extremely large air volume through the number of air changes required for indoor worker protection can be significant. Also, the fact that IPFPE's are often in the "fine particle" range, i.e., less than 5 microns, dictates the need for high efficiency collectors which are relatively costly.

- In certain cases, especially when the IPFPE is "fine particulate," the application of a control technique produces some special secondary problems resulting from handling, transfer, and disposal of the collected particulate. Special precautions must often be employed to prevent wind dispersion, erosion, and runoff from occurring.

° PROS °

- In many cases, a significant portion of the <u>total</u> fugitive particulate emissions emanating from an industrial facility results from "universal sources" such as plant/haul roads, storage piles, transfer operations, and disposal sites. Control technology applications for these sources are reasonably well defined and do not result in a severe economic impact on the plant operator in most cases.

- At times emissions of fugitive particulates can be reduced through a diligent "housekeeping" and equipment maintenance program. Employee carelessness can also result in increased IPFPE. Avoidance of unnecessary process upsets, shut-down and start-up operations, and slipshod performance of routine plant activities such as handling and transfer of materials can result in emission reductions often accomplished at no increase in operational costs.

5.3 FACTORS INFLUENCING THE IPFPE STATE IMPLEMENTATION PLANNING PROCESS

In attempting to develop a reasonable control approach for IPFPE sources and integrating it into the existing SIP structure, a number of factors are involved. These factors will influence IPFPE control options and plans at least through the next several years, or until a significant technical effort is developed which will fill current information gaps in the areas of IPFPE measurement, control device/technique application, impact analysis, and the like. However, these factors do not mitigate against facing up to the fact that IPFPE sources do exist and are identifiable, that they can cause significant impact on TSP air quality in specific situations, and that even with our current level of technical knowledge and engineering experience it has been demonstrated that IPFPE sources can and should be reasonably controlled. Significant "CONS" and PROS" of our current situation can be summarized as follows:

° CONS °

- At the present time, the great majority of potential IPFPE sources have not even been quantified by emission estimation techniques, much less by actual measurement. Without data regarding their chemical/physical parameters and process-related characteristics (exit velocity, temperature, location, etc.) it is virtually impossible to determine the most reasonable and effective control technology application.

- In many instances, the IPFPE source presents a unique case. Even in the same industry, factors such as plant design and age, physical plant configuration, proximate location to populated receptor areas, topography and meteorology, acting together or individually, result in an empirical situation. It cannot be solved simply by applying a control plan which was developed and worked for a source with similar process parameters.

source basis for those sources within the non-attainment area which are suspected to be contributing to the short-term violations of the NAAQS.

If the existing regulations are determined to be inadequate for the attainment of the NAAQS, the additional degree of control should be determined for the sources in question. Once the various control measures have been evaluated in regard to their reasonableness, they should be tested by reapplication of the short-term modeling technique to test the effectiveness of the control measure in reducing the short-term localized impact of the sources under consideration. While the short-term localized impact will be the "binding constraint" in most cases as far as IPFPE is concerned, the area-wide annual average impact should be evaluated in order to ensure that the measures developed for minimizing the short-term impact will be satisfactory in providing adequate control for the overall area-wide impact from these sources. The overall control strategy developed for IPFPE should reflect the degree of control necessary to attain the NAAQS from both the short-term and annual average aspects. Thus, the overall effectiveness of the strategy should be tested in the short-term as well as the long-term mode to ensure the development of the best strategy possible.

The development of the control strategy should consider such factors as control technology availability and applicability, time required for implementation, enforceability, and overall practicability and reasonableness.

The final control strategy should provide for control of IPFPE as expeditiously as practicable. An adequate documentation of the analysis should be developed to ensure completeness. Once the strategy is finalized, enforceable regulations and compliance test methods (see section 5.4) must be developed to implement the strategy. Some example regulations currently in existence to control IPFPE are contained in section 5.4. Additionally, a series of model regulations applicable to IPFPE are contained in section 5.5.

approach is presently under investigation. To repeat, however, it is usually the short-term, localized impact of IPFPE that determines the necessary control.

Final Approach:

Perform dispersion modeling for the short-term localized impact, using the improved modeling approach to be made available by EPA later in 1977 (as referred to in Section 4.2). Secondarily, determine the area-wide annual average impact using the approach described in Section 4.3 or, when available, the approach referred to above.

- Review Existing Regulations to Determine Applicability to IPFPE Control - Reduction of IPFPE will likely require a new approach to regulatory control of such emissions. Currently, regulations for control of fugitive emissions are of three general types: nonspecific nuisance regulations, quantitative property-line regulations, and regulations that prescribe specific control measures in specific circumstances. The majority of regulations are of the first type, defining dust as a nuisance and often requiring "reasonable precautions" to prevent emissions. While flexible and capable of being strong enforcement tools, such regulations may not always be effective for IPFPE control. The other two types can be more effective; however, property-line regulations in particular require enforcement and measurement techniques that are even more difficult than those required for stack emission sources. Regardless, a judgment must be made as to whether existing regulations can effectively control IPFPE and, if so, what the compliance status is of each identified source.

- Determine the Relative Degree of Control Required for IPFPE and a Plan for Implementation - Using the selected approach for baseline IPFPE source/receptor relationships:

  Using the results of the short-term modeling, determine the degree of control that will occur from full compliance with adopted regulations. This evaluation should be done on a source-by-

Table 5-1. MICROINVENTORY OF PARTICULATE EMISSIONS

(EXAMPLE)

Source category	Emission level parameter	Emission factor	Particulate emissions, ton/yr
Unpaved roads	139.4 VMT/day	5.3 lb/VMT	135
Normal paved roads	243,884 VMT/day	1.75 gm/VMT	156
Aggregate storage	3.3 acres	3.4 ton/ac/yr	11
Motor vehicles	243,884 VMT/day	0.0013 lb/VMT	58
Railroads	142,350 gal/yr	0.025 lb/gal	2
Fuel combustion, area sources	(From Regional Inventory)		42
Waste disposal	(From Regional Inventory)		18
Active construction	88 acre-months	1.0 ton/acre/month	92
Asphalt plant			
Vented	(From Agency Files)		6
Fugitive	(Example, Section 2.11)		27
Gray iron foundry			
Vented	(From Agency Files)		110
Fugitive	(Example, Section 2.5)		220
Total			877
Emission density, ton/mi^2/yr			279
Percent fugitive dust			52
Percent IPFPE			28

within a 0.8 to 1.6 km (1/2 to 1 mile) radius surrounding each TSP sampling site may be surveyed to identify conventional point and area sources of particulates, plus fugitive dust and IPFPE's. The methodology for this "microinventory" has been developed and applied in various studies.[9,10] This method will provide a means of identifying the types of particulate emission sources which will have an impact upon the individual monitoring site in question.

An example microinventory tabulation is presented in Table 5-1.

- Select an Approach to Establish the Baseline Source/Receptor Relationship

Interim Approach:

If the assessment of the IPFPE problem indicates a short-term localized impact, the preliminary dispersion modeling techniques described in section 4.2.2 should be employed to estimate the relative 24-hour impact of IPFPE on air quality. While some may question the relative accuracy and precision of the fugitive emission factors currently available and the dispersion modeling techniques outlined in section 4.2, the results should be of sufficient quality to (1) allow at least a relative ranking of sources based on greatest impact, (2) define the general nature and characteristics of IPFPE so that a determination of reasonably available control technology application can begin on a source-by-source basis, and (3) support the need for acquisition of better emission factors or source test data using the state-of-the-art techniques described in section 4.4 for those major sources under consideration for potential control.

In most cases the short-term localized impact of IPFPE will be the binding constraint; however, in some cases the long-term or area-wide impact could be of some significance and it should be evaluated. This can be accomplished as part of the overall evaluation of the annual average impact of all sources within the given area. An interim approach is discussed in Section 4.3. An improved

to resurvey the entire inventory area for overlooked or currently unreported sources* of particulate emissions.

- Determine the Geographical Distribution of Sources - In order to more easily assess the spatial distribution of IPFPE (and fugitive dust) sources and their possible impact on TSP sampling sites, a map locating sources and sites should be constructed. Additionally, if the sources of IPFPE are uniformly scattered across the geographical area chosen for investigation, and concentrations at TSP sampling sites throughout the area are observed to move up and down together on sequential sampling days, these sources are probably responsible for the region-wide influence on air quality. However, the possibility that an extra-regional source may be causing this situation should always be considered. Always investigate other possible influences, such as pollen, atmospheric aerosol formation, and influx of particulate, and attempt to quantify their impacts.

  However, in many cases the impact of IPFPE can be readily associated with a single source. Correlation of highest sampling loadings with wind direction from the source, visual observation, and the examination of specific samples noted previously can all assist in confirmation of the source-receptor situation. If isolated or single sources appear to be major contributors to nonattainment, a detailed emission inventory should be developed for the source in question which would include fugitive emissions.

  It is generally agreed that the high-volume sampler, as it is usually employed to monitor regional air quality, is principally influenced by particulate emissions occurring within a 0.8 to 1.6 km (1/2 to 1 mile) radius. This is especially the case when IPFPE sources are being considered, due to their low exit velocity and usual emission at or near ground level. Therefore, the area

---

* This survey effort presents the ideal opportunity to locate and quantify fugitive dust emissions concurrent with IPFPE. Fugitive dust sources such as unpaved roads, active construction, agricultural activities, and the like should also be located and tabulated. Emission factors may be found not only in AP-42 but other publications[6,8] as well.

U.S. EPA is currently developing uniform siting criteria. Until these are available, guidance may be found in a 1972 publication.[7]

- Inspect Samples for First-Order Impacts - At times, visual inspection or physical/chemical techniques can provide evidence of air quality impact from IPFPE sources. For example, if crushed rock emissions are suspect, the following approach could be employed:

  (a) Visual inspection could be made of the TSP filters for grayish coloration, especially on days when the wind was known to be coming from the suspect source.

  (b) Polarized light microscopy could then be employed to determine (quantitatively) that crushed rock particles have been captured on the filter.

  (c) Depending on the chemical composition of the rock being processed, the sample could be analyzed for indicators such as calcium, phosphorous, and the like. Unusually high levels of these "indicator" elements would tend to confirm a source-receptor impact.

  However, while it is possible to use microscopic and other analytical techniques in concert to provide comprehensive particle identification analysis, the requisite analytical sophistication and cost constrain their use for widespread screening-level studies. Their utility is primarily in more precise study of already well-structured problems.

- Identify Suspected/Known Sources of IPFPE and Update Emission Inventory - Within the constraints of available manpower, the existing regional/area particulate emissions inventory must be updated to include the contribution from IPFPE. Source-related data supplied in Section 2.0 should be used if no better information is available. It is recommended that a special effort should be made

ical control strategy can be developed. The amount of work involved in each development phase will vary from area to area depending on available data, magnitude of the TSP problem, types and number of IPFPE sources, etc. Listed below, in sequential order, are a series of procedures or action phases which may be employed to determine (or at least strongly suspect) that IPFPE's are a significant factor in nonattainment and/or maintenance of the NAAQS for TSP. Once such a positive determination has been made, the sequence of activities continues until the most appropriate strategy is formulated.

- Review and Validate Air Quality Data - Validate and evaluate all available TSP ambient air measurement data, determining its representativeness, influencing factors, and limitations. Be positive that it was collected and analyzed using the Reference Method and that proper quality control was exercised. Several guidelines have been prepared to assist with this process.[3,4,5] If possible, examine air quality data statistically[6] for indications of major impacting source categories (e.g., effect of rainfall, weekday versus weekend readings, wind directions associated with high concentrations).

- Evaluate TSP Sampling Site for Bias - Generally this information is known. Regardless, each site should be assessed in light of the following criteria:

  (a) How well the location represents particulate air quality of the surrounding area.

  (b) Appropriateness of site for use in determining regional attainment or nonattainment of air quality standards.

  (c) Presence of a local dominating pollution source, especially a known or suspected source of IPFPE.

  (d) Presence of physical interferences.

and transportation sources. The two modifying factors are meteorology and monitoring network configuration and siting. Industrial process fugitive particulate emissions (IPFPE) were classified as "nontraditional sources."

As noted in Section 1.0, IPFPE have often been recognized as a source of particulate matter, but only minor control efforts have generally been pursued to date. In many operations, especially where dry materials handling is prominent, particulate matter emissions are generated in processes both inside and outside of plant facilities, but still on plant property. This fact was repeatedly noted throughout Section 2.0. Also, the low height at which they are typically emitted means that very little dilution occurs and fairly high ambient levels are created. Consequently, while IPFPE problems are generally localized and associated with a point source of particulate emissions, they can influence air quality over a considerable area if the source is a major industrial complex or a cluster of individual sources in or near an urban area.

Therefore, IPFPE in many cases may be a major contributor to the nonattainment of the NAAQS, and plans should be developed for their control. Once the need for control is identified, a control strategy must be developed and evaluated in light of its economic impact, and its feasibility from an implementation and enforcement/compliance aspect. These factors and their respective roles in the SIP process will be considered in the following sections.

5.2 PROCEDURES FOR DEVELOPMENT OF A CONTROL STRATEGY FOR IPFPE

The need for and development of any control strategy designed to attain and maintain the NAAQS initially requires an analysis of current and possible future air quality problems. If IPFPE can be identified and quantified, a categor-

5.0 INTEGRATION OF IPFPE IMPACTS INTO THE STATE IMPLEMENTATION PLANNING PROCESS

5.1 INTRODUCTION

While considerable progress has been made in reducing ambient TSP concentrations in many locations, it is now apparent that the primary national ambient air quality standard for TSP (NAAQS) will not be attained on a nationwide basis under existing State Implemention Plans (SIP). U.S. EPA's most recent estimate[1] indicates that 52 percent of the 247 designated Air Quality Control Regions had measured concentrations in excess of either the annual or maximum 24-hour NAAQS for TSP in 1976. In light of this, U.S. EPA officially notified 31 states in July 1976 that their SIP must be revised to provide for attainment of the NAAQS. As part of this revision process, the states must seriously evaluate the impact of all particulate matter sources including IPFPE and, where defined as a legitimate attainment problem, provide a revised SIP to include their control by July 1978.

In a recently completed study titled "National Assessment of the Particulate Problem,"[2] five factors were identified as affecting the attainment and maintenance of the NAAQS for TSP. These were conceptually grouped as follows: three general categories of sources that contribute to the TSP loading at any given point, and two factors that act to modify the ambient levels measured. The three general categories of particulate matter emissions are those from traditional sources, nontraditional sources, plus natural

8. TRW Systems Group; "Air Quality Display Model". Prepared for the National Air Pollution Control Administration under Contract No. PH-22-68-60 (NTIS PB 189194), DHEW, U.S. Public Health Service, Washington, D.C. (November 1969).

9. Technical Manual for the Measurement of Fugitive Emissions: Quasi-Stack Sampling Method for Industrial Fugitive Emissions. Industrial Environmental Research Laboratory, U.S. Environmental Protection Agency, Research Triangle Park, N.C. May 1976. Publication No. EPA-600/2-76-089c.

10. Technical Manual for the Measurement of Fugitive Emissions: Roof Monitor Sampling Method for Industrial Fugitive Emissions. Industrial Environmental Research Laboratory, U.S. Environmental Protection Agency, Research Triangle Park, N.C. May 1976. Publication No. EPA-600/2-76-089b.

11. Personal Communication: Michael Maillard, P.E., Wayne County Department of Health, Air Pollution Control Division, Michigan.

12. Environmental Protection Agency Regulations on National Primary and Secondary Ambient Air Quality Standards. 40 CRF 50.

13. Instructions for operation of the Hi-volume sampler head (Model 65-000). Andersen Air Samples 200, Inc. Atlanta, Ga.

14. Respirable Dust Monitor Model RDM-101 for short term measurements. GCA Corporation, Bedford, Massachusetts.

15. Technical Manual for the Measurement of Fugitive Emissions: Upwind-Downwind Sampling Method for Industrial Fugitive Emissions. Industrial Environmental Research Laboratory, U.S. Environmental Protection Agency, Research Triangle Park, North Carolina. March 1976. Publication No. EPA-600/2-76-089a.

REFERENCE FOR SECTION 4.0

1. Slade, D.H. (ed.). "Meteorology and Atomic Energy," National Technical Information Service TID-24190, Sringfield, Virginia 22151 (1968).

2. Turner, D.B. Workbook of Atmospheric Dispersion Estimates. U.S. Department of Health, Education, and Welfare, Cincinnati, Ohio. May, 1970.

3. U.S. Environmental Protection Agency; Reviewing New Stationary Sources; Guidelines for Air Quality Maintenance Planning and Analysis, Volume 10 (in preparation). OAQPS No. 1.2-029, U.S. Environmental Protection Agency, Research Triangle Park, North Carolina 27711. (1977).

4. U.S. EPA; User's Network for Applied Modeling of Air Pollution (UNAMAP); (Computer Programs on Tape for Point Source Models, HIWAY, Climatological Dispersion Model and APRAC-1A) NTIS PB 229771 National Technical Information Service, Springfield, Virginia 22151, (1974).

5. Zimmerman, J.R., and R.S. Thompson. "User's Guide for HIWAY: A Highway Air Pollution Model"; Environmental Monitoring Series EPA-650/4-008, NERC, EPA, Research Triangle Park, N.C. 27711, (February 1975).

6. Turner, D.B. and W.B. Petersen. "A Gaussian-Plume Algorithm for Point, Area, and Line Sources;" Paper presented at the 6th NATO (CCMS International Technical Meeting on Air Pollution Modeling, Frankfurt, Germany. September 24-26, 1975. (To be available at UNAMAP in late 1977).

7. Busse, A.D., and J.R. Zimmerman. "User's Guide for the Climatological Dispersion Model". Environmental Monitoring Series EPA-R4-73-024 (NTIS PB 227346AS) NERC, EPA, Research Triangle Park, North Carolina 27711. (December 1973).

each filter is compared to the total weight (combined weight of all filters) to determine the percentage of each size range. Cascade impactors and high-volume samplers can be used in similar locations.

4.4.5 Beta Gauge

This is a device[14] which measures the respirable fraction (smaller than 2 μm particles) of suspended particulate matter. Particles larger than 2 μm are filtered out by a cyclone collector. The smaller particles which pass through this collector are impacted on a thin plastic film. The amount of beta radiation from a carbon-14 source which penetrates this sample is proportional to the quantity of collected material. The associated electronics relate this quantity to the volumetric flow rate and provide a digital display of the respirable dust concentration.

A slightly different method is used by the Wayne County (Michigan) Department of Health to sample ventilators.[11] A pitot tube traverse is made to locate a point having relatively stable flow conditions in the ventilator outlet. A single isokinetic sample is made at this point to determine the particulate density in the outlet. Based on the sizes of the fan and the exhaust duct, the total volumetric flow rate is obtained from a family of fan curves. From these values the emission rate can be calculated.

4.4.3 High-volume Samplers

High-volume samplers, which are used to measure the concentration of particulate matter in the ambient air,[12] can be used in many ways to determine the source strength and impact of fugitive emissions. The applications of high-volume samplers include the roof-monitor-source sampling method and the upwind/downwind ambient sampling technique.[15] Several high-volume samplers may be used around storage piles or waste dumps in order to estimate windblown emissions. Other uses include positioning high-volume samplers on roof tops to estimate building losses.

4.4.4 Cascade Impactor

This method[13] is designed to fractionate suspended particulate into several particle size ranges. Rather than draw air through only one filter, as does a normal high-volume sampler, a cascade impactor draws air through a series of plates. Each of the plates contains perforations of known size. The perforations decrease in size with each successive plate, which in turn increases the velocity of the air. Beneath each plate is a preweighed filter on which the particles will impact depending on their size and velocity. After sampling, the filters are weighed to determine the weight of particulate matter collected. The weight of

4.4 MEASUREMENT OF IPFPE's (State-of-the-Art)

Briefly described in the following section are several basic tools for measuring both source strengths and ambient concentrations of fugitive particulate emissions.

4.4.1 Quasi-stack

Quasi-stack[9] is a technique which can provide quite accurate measurements of fugitive particulate emissions from a wide variety of relatively small individual operations. This method requires that the source be completely isolated by an enclosure capable of capturing essentially 100 percent of the emissions without affecting the emission rates, the physical and chemical characteristics of the emissions, or other plant processes. Emissions are vented to the atmosphere through an exhaust duct, where they are measured using standard stack sampling techniques.

4.4.2 Roof Monitor

The roof monitor sampling method[10] is used to quantify fugitive emissions which escape through monitors and through other building openings such as windows, doors, and fan-driven ventilators. This method involves measuring (1) the area of the monitor or building opening, (2) the velocity of the flow through these openings with a hot-wire or rotating-vane anemometer, and (3) the concentration of particulates emitted from the processes within the building after they have been mixed and diluted by the internal atmosphere of the building. A high-volume sampler is most often used to determine the TSP concentration. The fugitive emission rate can then be calculated from the measured concentration and the volume flow rate (area times velocity) through the monitor/opening.

To the extent practicable, emissions from nonfugitive sources should be quantified and characterized for the specific days of interest. For example, it is entirely likely that a source whose controls normally operate at a specified collection efficiency may, on a particular day, actually be emitting at a rate much higher than normal. If such were the case, the point source modeling results based upon the normal emission rate would greatly underestimate the contribution of nonfugitive sources and thereby exaggerate the inferred impact of the fugitive sources.

4.3 ESTIMATION OF THE LONG-TERM, AREA-WIDE AIR QUALITY IMPACT

No long-term dispersion model is generally available which adequately considers the complicating factors peculiar to IPFPE's. The possible development of such a model for industrial source complexes is being investigated. In the interim, the absence of an adequate annual model is not critical, since the short-term localized impact of IPFPE's is of primary concern from the viewpoint of developing adequate emission control strategies.

Preliminary estimates of area-wide, annual-average impact can be obtained by including the IPFPE sources in the multisource urban models, e.g., CDM[7] and AQDM,[8] which are being used for other sources of particulate matter in the area of concern. For such purposes, the details of source configuration are not so critical as they are for short-term, localized, air quality modeling. On the distance scales of area-wide models, many area sources (e.g., haul roads and roof monitors) can be treated as point sources. The roadway network of a relatively large plant can be treated as a uniform area source. A related aspect is that many emissions can be "lumped" because the physical parameters of the individual sources are not so critical as they are in short-term, localized air quality modeling.

The upwind sampler(s) should be located so as to be representative of the same air mass as that being sampled by the downwind sampler(s). It is important to ensure that no extraneous sources, such as nearby roadways, are affecting the sampler(s). Generally, the downwind sampler(s) should be located in areas where the general public has access but as near as possible to the IPFPE sources in question. Because many IPFPE sources are near ground level, their air quality impact is highest near the source and decreases rather quickly with downwind distance. However, for some elevated IPFPE sources, such as roof monitors, the maximum air quality impact may be at an appreciable distance from the plant boundary. The selection of locations for samplers should be made with this in mind.

In order to document the relationship between measured air quality and suspected IPFPE sources, simultaneous meteorological measurements should also be made. Meteorological parameters which should be measured include, at a minimum, hourly wind speed and wind direction. The availability of on-site meteorological data is also important in situations where dispersion modeling is applied to determine the impact of nonfugitive stack emissions. For this purpose, hourly observations of temperature and cloud cover are also needed.

Modeling the Nonfugitive Sources - The sources of nonfugitive emissions do not generally present the complications associated with fugitive emissions. As such, they are more amenable to modeling via available computerized models (i.e., PTMAX, PTMTP, etc.) with the expectation of reliable results. The modeling should be done for those days identified as showing the greatest impact from the total plant. Meteorological data for the selected days should be available as discussed above.

maximize the ambient impact, and (2) are reasonably likely to occur at the plant locations. The first point requires expertise in relating source impact to meteorological conditions. The second point requires expertise in the climatology of the area in which the given IPFPE source is located.

4.2.2 Field Measurements (Upwind/Downwind Sampling)

The impact of the total particulate emissions from a facility can be estimated by judiciously measuring the ambient particulate concentrations upwind and downwind of the facility with high volume samplers.[15] The contribution of emissions from nonfugitive sources can be estimated by dispersion modeling. This contribution can then be subtracted from the estimated impact for the entire plant. The remainder is then inferred to be the impact of the IPFPE's.

This technique is not without sources of considerable error. Reasonable precautions should be taken in the interpretation of all measured and inferred concentrations. The approach is nevertheless a reasonable one for estimating the magnitude of a suspected fugitive emission problem and for identifying possible corrective actions.

Sampling Sites and Data Collection - The short-term, "worst case" impact of fugitive emissions at points near a plant is generally of chief concern. Accordingly, the downwind sampler(s) should be located so as to be sensitive to this impact. The number of samplers to be used to determine downwind concentrations should reflect the number, strength, and size of suspected IPFPE sources at the facility. The field sampling program should be conducted over a sufficiently long period to assure that conditions reasonably approximating the worst case are observed.

- Combinations of Source Categories--For problems involving any two, or all three, source categories, the estimated impacts for each source class can be overlayed. This can be done manually. For more complex problems involving many calculations, this is handled by the computerized model PAL[6] (Point, Area, Line). Use of this model is not confined to problems involving mixtures of source categories. It lends itself as well to complex line source or area source problems. The line source treatment is the same as that of HIWAY. The area source treatment involves the integrated-line-source concept discussed under "Areas sources," above. This model should be available in UNAMAP by late 1977.

Selection of Meteorological Input Data - In order to apply the modeling techniques discussed above, meteorological input assumptions are necessary. In a very practical sense, they are necessary for the solution of the Gaussian equations. Beyond this, however, the meteorological assumptions have a great qualitative importance in that they determine the reasonableness of the resulting estimates of air quality impact. The selection of meteorological input data is perhaps the most critical step in applying dispersion modeling to estimate maximum, short-term, air quality impacts. Depending on the physical parameters of a given source, there is a unique set of meteorological conditions, often referred to as the "critical" conditions, which result in the maximum impact of the source. For plants involving several sources of widely varying physical characteristics, considerable judgment is involved in selecting the conditions for the maximum impact of the plant taken as a whole. In the case of IPFPE's, these assumptions must cover 24-hour periods since this is the averaging period of primary concern. Assumptions must be made for the following variables: atmospheric stability, wind speed, wind direction, and temperature. Conditions must be chosen which: (1)

Necessary Source Parameters - For the application of Gaussian plume modeling, the values of several physical source parameters are essential. The essential source parameters for each source category are as follows:

- Point sources--emission rate, release height, effluent temperature, and the volume flow rate of the exhaust stream or the parameters from which it can be calculated, i.e., the exhaust velocity and the area of the exhaust opening.

- Area sources--emission rate, effective release height, area covered, shape, orientation.

- Line sources--emission rate, effective release height, length, width, orientation.

Simplified Modeling Techniques - Suggested techniques for each source category are as follows:

- Point sources--Many point-source problems can be addressed by the application of the equations in WADE with the aid of a desk-top calculator. Also appropriate are the techniques described in the revised Volume 10 of the AQMA Guidelines.[3] For problems involving many calculations, the computerized models PTMAX, PTDIS, and PTMTP are recommended. These models are included in UNAMAP.[4]

- Area sources--These are often approximated as point sources and modeled by appropriate modifications to point source techniques. An example of this is the virtual-point-source approximation described in WADE. Another example is illustrated in Appendix C. A second approach is to treat the area source as a parallel series of line sources. Both approaches are amenable to desk-top calculation.

- Line sources--Many line sources can be addressed directly by desk-top calculations using the equations in WADE. It is sometimes reasonable to approximate a line source as a series of point sources and to model the latter by appropriately modified point source techniques. This approach is illustrated in Appendix C. For complex problems involving many calculations, the computerized model HIWAY[5] is recommended. HIWAY is included in UNAMAP.

necessity. Each problem involves a case-by-case determination.

4.2.1 Dispersion Modeling

The simplified dispersion modeling techniques suggested herein are based on the steady-state, Gaussian plume concept. The Gaussian concept is described in the Workbook of Atmospheric Dispersion Estimates (WADE).[2] WADE also presents a number of adaptations of the basic Gaussian model for applications to a wide variety of problems.

A preliminary estimate for many IPFPE situations can be obtained by applying the equations in WADE with the aid of a desk-top calculator. More complex problems, e.g., those involving the interaction of several sources in a complex facility, may necessitate the use of available computerized models which allow the rapid solution of these same equations. Such models are identified later in this discussion.

Classification of IPFPE Sources - For appropriate application of Gaussian modeling, sources must be categorized as point sources, area sources, or line sources. Some IPFPE sources lend themselves to ready classification. For others, some degree of judgment may be involved. For example, a roof vent may be modeled as though it were a point source (i.e., stack). A transfer point may be treated as either a point source or an area source depending upon its physical dimensions. A roof monitor or a haul road falls logically into the class of line sources but can be modeled as a series of point sources. A storage pile (coal, ore, aggregate, etc.) can generally be modeled as an area source. A materials storage building of the type with open ends can be handled either as two point sources (i.e., one on either end of the building) or as an area source. A building with many points of discharge through windows and doors should be treated as an area source.

These problem areas are more critical for IPFPE's than for traditional stack sources because of the following complicating factors:

- IPFPE sources are generally ill-defined as to the critical physical parameters necessary for modeling. Further, emission rates are often time-variable and frequently vary with the meteorological conditions (wind speed) under which they are being modeled.

- The release height of IPFPE's is generally low-level, where diffusion patterns are often chaotic due to disturbances associated with plant structures and activities.*

- The gravitational effects on larger particles may result in a non-Gaussian plume which is difficult to model. Detailed particle size data needed to address this problem are generally not available.*

No modeling techniques for addressing these complicating factors are given in this document. A dispersion model which considers these factors for industrial complexes is currently being developed and should be available by late fall 1977. In the interim, the simplified techniques identified below are recommended for preliminary assessments of short-term, localized air quality problems in the vicinity of IPFPE sources. Generally, these techniques are "conservative," that is, the estimated impacts are higher than would actually be realized.

Because each problem is unique, it is not possible to categorically recommend which of the two approaches, modeling or monitoring, should be used. In some cases, the simplified modeling techniques discussed in this document may suffice. In other situations, the presence of complications may exceed the capabilities of even the most sophisticated models, so that an extensive monitoring program is a

---

* The reader is referred elsewhere for more discussion of this topic.[1]

4.2 ESTIMATION OF SHORT-TERM, LOCALIZED IMPACT

The short-term, localized impact of IPFPE sources can be estimated both by dispersion modeling and by field measurement (upwind/downwind monitoring). There are advantages and disadvantages to both approaches. Monitoring is intuitively more attractive because it involves actual, measured data, while modeling is based on the mathematical simulation of assumed atmospheric processes. However, for monitoring to be reliable, the data collection program must be comprehensive in scope and subject to strict quality control. This is resource-intensive and, therefore, not always feasible. Also, the interpretation of monitoring results is not always straightforward. Neighboring sources and/or high background concentrations often present complications. Even when it is possible to isolate the impact of the plant of concern, it is often difficult to relate this total impact to the individual contributing sources in the plant complex. It is even difficult in some cases to adequately distinguish the impact of IPFPE's from that of the stack emissions.

Dispersion modeling, on the other hand, is relatively inexpensive and does not present the difficulties described above. The major disadvantage is the uncertainty associated with model estimates. The major sources of error in dispersion modeling are as follows:

- Inadequacies in the simulation of physical phenomena by models
- Inadequacies in the input data to models
- Lack of expertise in applying models and in interpreting the results.

4.0 ESTIMATING THE AIR QUALITY IMPACT OF INDUSTRIAL PROCESS FUGITIVE PARTICULATE EMISSIONS (IPFPE's)

4.1 INTRODUCTION

Because they are emitted at or near ground level, fugitive emissions exert a proportionally higher air quality impact than do traditional (stack) emissions. Thus there is a strong reason to suspect that IPFPE sources may contribute significantly to the nonattainment of air quality standards for total suspended particulates in many urban areas. The impact of IPFPE's generally is most critical on a short-term basis in the immediate vicinity of the source. Therefore, a control strategy designed to attain annual average air quality standards at sites in an existing area-wide monitoring network may not be sufficiently stringent to assure attainment of 24-hour standards in the immediate vicinity of IPFPE sources where such monitoring sites may not exist. It is therefore essential to address the short-term, localized, impact, as well as the long-term, area-wide impact, in order to develop an adequate control strategy for IPFPE's.

Section 4.2 discusses the short-term, localized impact of IPFPE sources. Two approaches for estimating this impact are discussed: (1) dispersion modeling and (2) field measurement. The long-term, area-wide impact is briefly discussed in Section 4.3. Section 4.4 discusses various techniques and equipment used in measuring IPFPE source strengths and resulting ambient concentrations. For purposes of illustration, a modeling exercise on a hypothetical facility is detailed in Appendix C; an outline for a field measurement program at the same facility is described in Appendix D.

REFERENCES FOR SECTION 3.4

1. Kinkley, M.L. and R.B. Neveril. Capital and Operating Costs of Selected Air Pollution Control Systems. Draft Report. Gard, Inc. Niles, Illinois. For U.S. Environmental Protection Agency. Contract No. 68-02-2072. March, 1976.

2. Process Plant Construction Estimating Standards. Richardson Engineering Services, Inc. and International Construction Analysts. Solano Beach, CA. 1976-1977.

3. Revised Technical Guide for Review and Evaluation of Compliance Schedules for Air Pollution Sources. Preliminary Draft. PEDCo-Environmental Specialists, Inc. Cincinnati, Ohio. For U.S. Environmental Protection Agency. Washington, D.C. Contract No. 68-01-3150. Task Orders 24 and 25. October, 1976.

award of a contract. After the contract is awarded, the equipment can be ordered from the supplier, and on-site work on foundations structures, utilities, buildings, etc. can be started. Upon delivery of the control device, it can now be installed and connected to the ductwork. Ductwork and hooding structures can be installed while awaiting delivery of the control device. When the construction phase is completed, the system must be tried out and any minor changes made to yield optimum operation.

The schedules given are to be used only as guidelines. A number of factors influence the delivery and construction phases of these schedules. These factors include: (a) special designs, which may require new fabrication drawings and different fabrication procedures; (b) special materials of construction; (c) limited space, necessitating unusual control system configuration or relocation of process equipment; (d) extensive modifications of the process; (e) type of contract--erected, non-erected, turnkey; (f) type of unit--shop-fabricated modular, or field-erected; (g) scheduling of downtime; (h) heavy production periods; and (i) weather. Actual time increments may vary significantly due to the size, type, and design specifications of the equipment, ease of retrofit, weather, labor problems, field changes, and a variety of other factors. For very small devices, the total elapsed time to achieve milestone 5 may be as low as 25 weeks for filter system and slightly less for a small scrubber.

Table 3-2. TYPICAL COMPLIANCE TIME SCHEDULES FOR INSTALLATION OF FABRIC FILTERS AND WET COLLECTORS

Milestones	Elapsed time,[a] weeks			
	Fabric filter		Wet collector	
	b	c	d	e
1. Date of submittal of final control plans to appropriate agengy	18-43	10-15	14-33	10-15
2. Date of award of control device contract	27-62	14-23	22-49	14-23
3. Date of initiation of on-site construction or installation of emission control equipment	58-122	18-30	64-119	17-33
4. Date by which on-site construction or installation of emission control equipment is completed	71-144	22-35	80-145	20-36
5. Date by which final compliance is achieved	74-149	25-40	83-150	22-40

[a] Elapsed time from preliminary investigation. For very small units time to achieve milestone 5 may be less than 25 weeks.

[b] Capacity less than 200,000 acfm.

[c] Capacity less than 10,000 acfm.

[d] Low-energy, capacity less than 150,000 acfm.

[e] Low-energy, capacity less than 10,000 acfm.

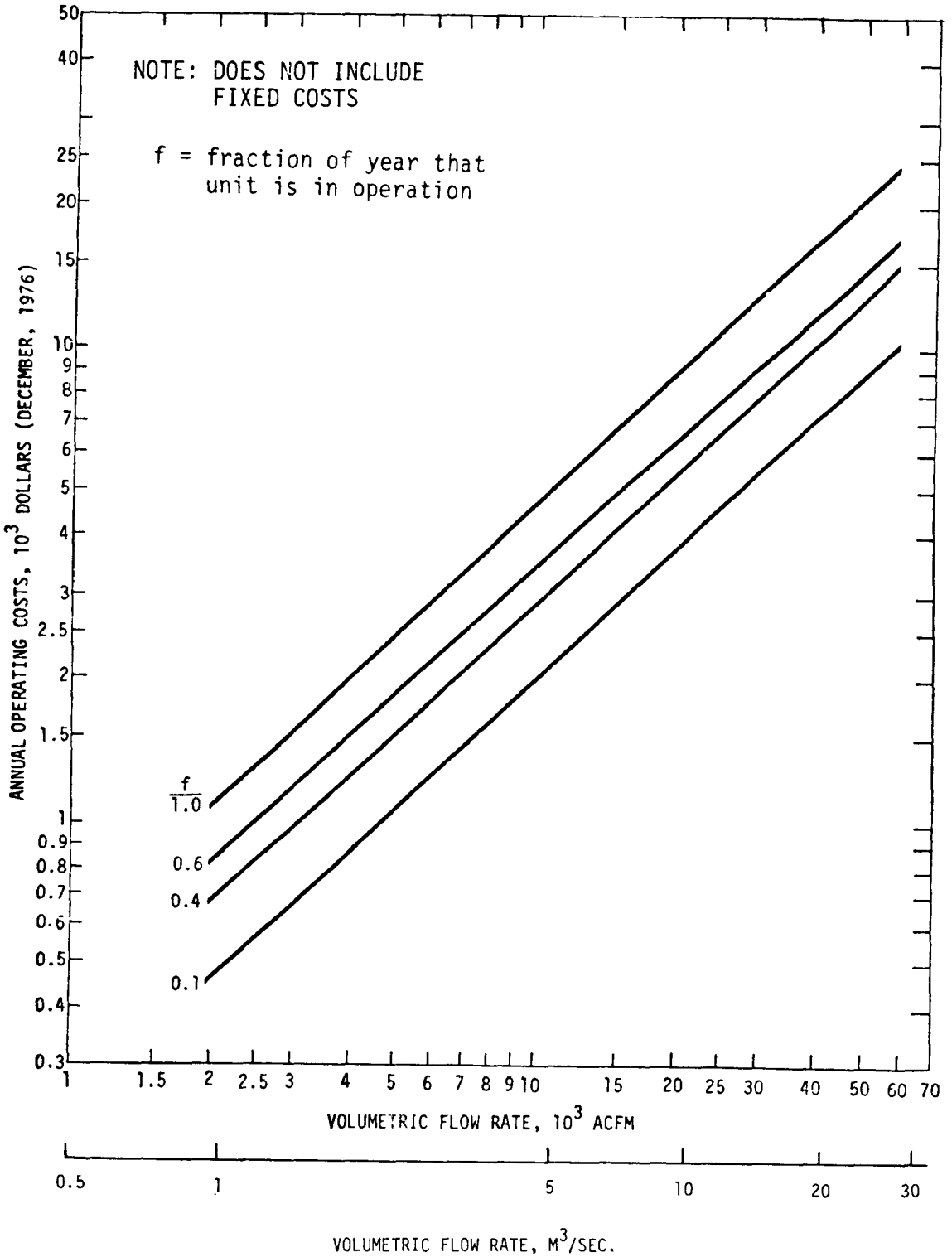

Figure 3-14. Annual operating costs for wet collector systems as a function of gas flow rate and usage.

are shown in Figure 3-14. These costs are based on an electricity cost of $\$0.0069/10^6$ joule ($0.025/kWh) and a water cost of $\$0.066/m^3$ ($\$0.25/10^3$ gallons). Maintenance and labor are estimated to be 8 percent of the total purchase cost of equipment.[1] The operating costs are plotted as a function of the fraction of the year the system is in operation, designated as f. Scrubber water is recirculated and no provisions were made for waste water or sludge disposal.

Energy requirements, in joules/yr (kWh/yr), for a wet collector operating at a pressure drop of 2000 Pa (8 inches of water) are expressed as 16×10^{10} (f)(V) - metric (21 (f)(V) - english), where f is the fraction of the year that the device is in operation, and V is the volumetric flow rate in m^3/sec (acfm). The expression is based upon a fan efficiency of 60 percent.

3.4.3 Installation Schedules[3]

A range of time schedules for installation of fabric filters and wet collectors are given in Table 3-2. Elapsed time is expressed in number of weeks from the start of preliminary investigations. These investigations include defining and justifying the need for control by estimating or measuring emissions, determining chemical composition, particle size, gas flow rate, etc., and preparing preliminary designs of the system. Preliminary investigation also includes the feasibility studies to determine the best method for reducing emissions. Depending on the amount of data previously obtained, the number of similar installations in existence, and the system size, the time for this phase of the work could vary from 10 to 43 weeks. After a system has been approved, detailed engineering drawings and specifications must be prepared to allow for advertising and

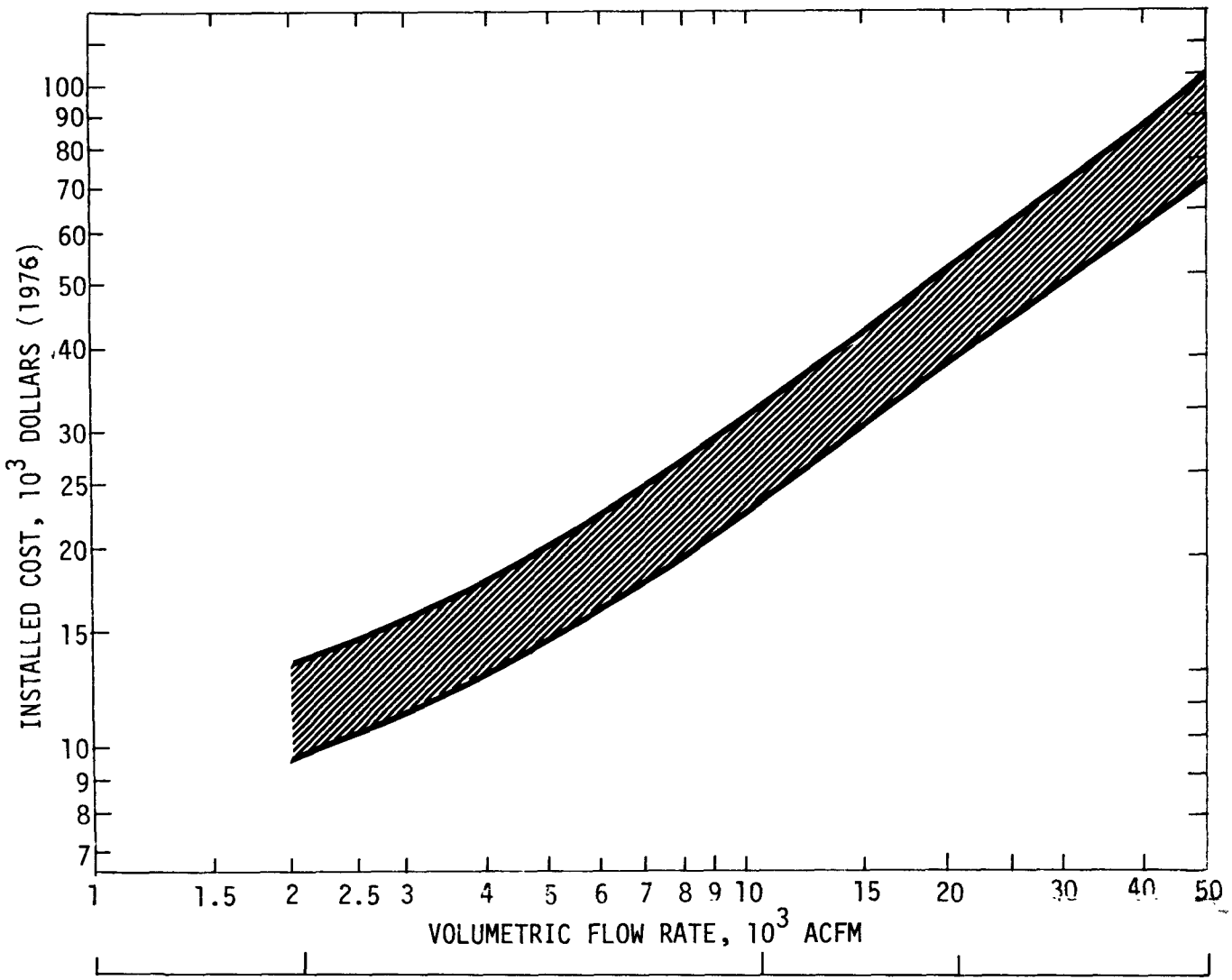

Figure 3-13. Range of total installed costs for wet collector systems.

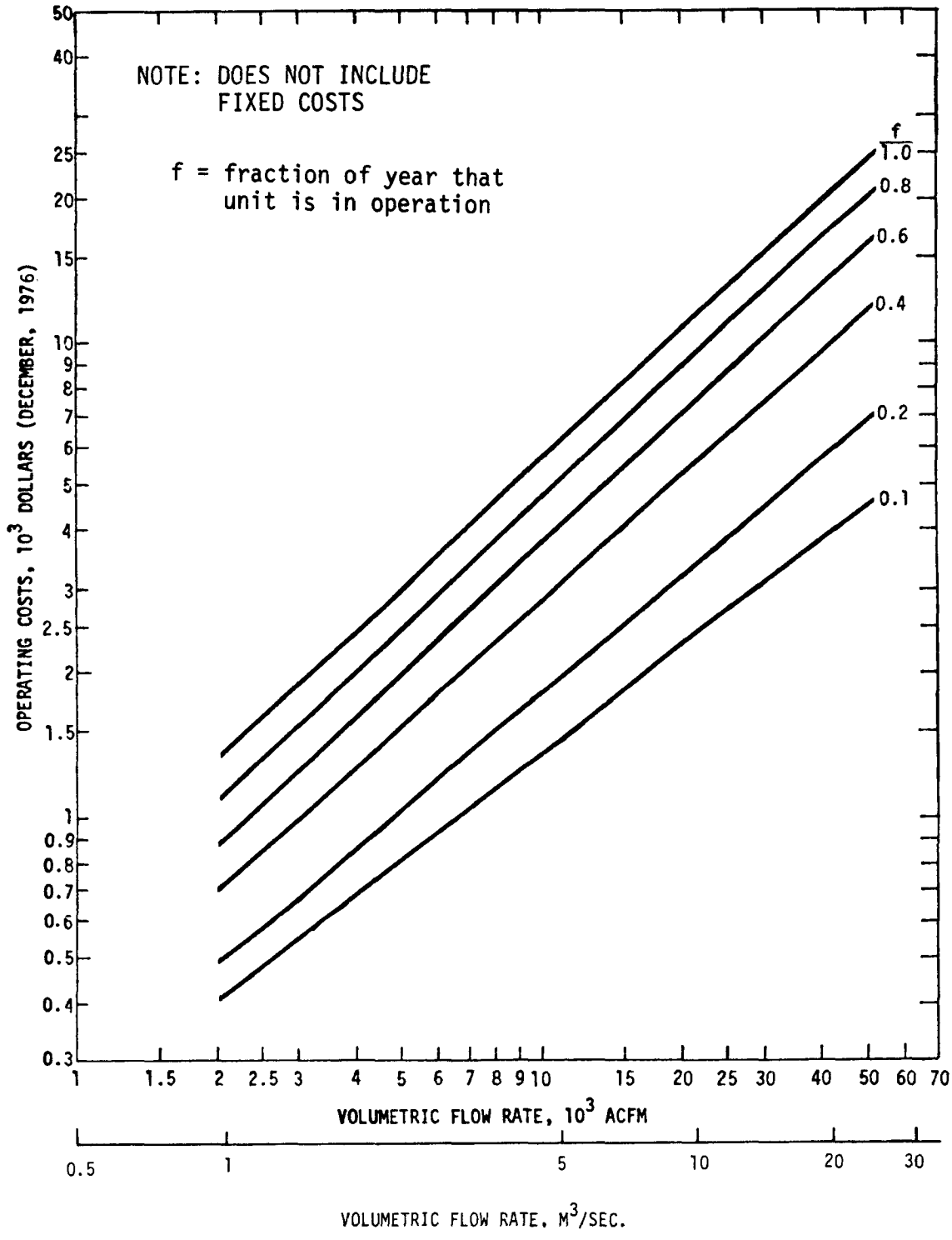

Figure 3-12. Annual operating costs for fabric filter systems as a function of gas flow rate and usage.

drop of 1200 Pa (5 inches of water) was assumed. The total equipment cost is multiplied by cost factor ranging from 1.8 to 2.9 to obtain total installed cost shown in Figure 3-11.

The annual operating costs presented in Figure 3-12, for the fabric filter systems are based upon a power cost of $\$0.0069/10^6$ joule ($0.025/kWh), an average bag life of 1.5 years, and an annual maintenance expense of 2 percent of the equipment purchase cost.[1] The annual costs are highly dependent upon the number of hours the system will operate in a year. Therefore, the annual operating costs in Figure 3-12 are plotted as a function of the fraction of the year the system is in actual use, designated as f.

Energy requirements, in joules/yr (kWh/yr) for a fabric filter operating at a pressure drop of 1200 Pa (5 inches of water) are expressed as 99.9×10^{10} (f)(V) - metric (13.1 (f)(V) - english), where f is the fraction of year in operation (actual operating hours per year divided by 8760 hrs/yr) and V is the volumetrict flow rate in m^3/sec (acfm). The expression is based upon a fan efficiency of 60 percent.

3.4.2 Wet Collectors

Wet collector cost estimates were based on a unit which operates at a pressure drop of 2000 Pa (8 inches of water) and a liquid-to-gas ratio of 5.3×10^{-4} m^3/sec per m^3/sec (4 gpm/10^3 acfm).[2] The installed costs were determined from the base purchase cost of a wet collector, fan/motor/drive, and pump system.[2] Total installed costs (including indirects) were obtained by multiplying the total equipment cost by a factor ranging from 2.3 to 3.2. The results are shown in Figure 3-13.

Annual operating costs consisting of the cost for electricity and water consumption, maintenance, and labor,

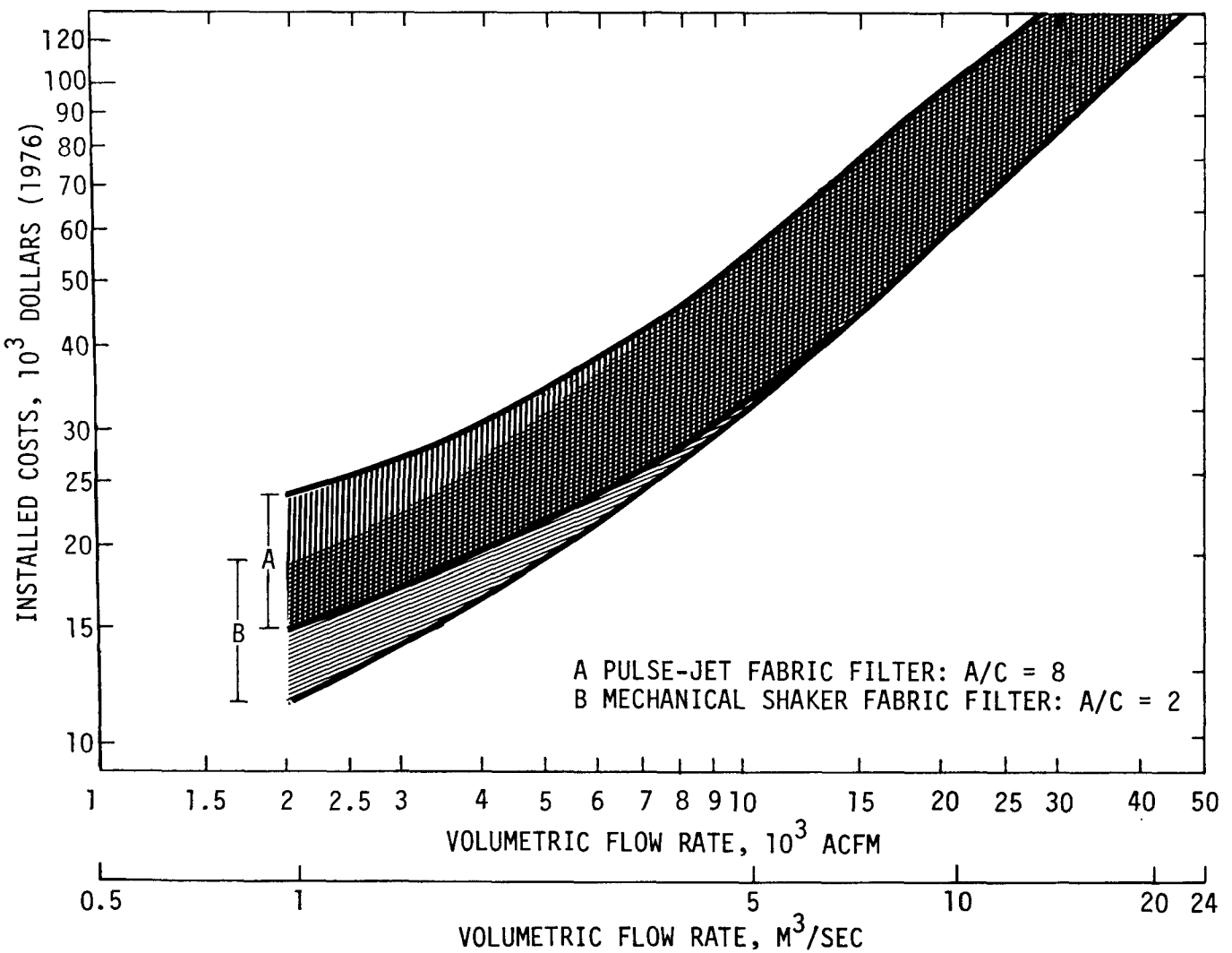

Figure 3-11. Range of total installed costs for ambient temperature fabric filter systems.

conveyors, shakers, air compressors, etc. are not included here since they are often minor. Fixed costs such as plant overhead, payroll, insurance, capital recovery, and depreciation are not included since they vary widely from company to company. These costs could, however, easily add about 20 percent of the total installed cost to the operating cost.

In preparing these generalized costs, the basic cost of equipment (control device and fan system) was multiplied by a factor to estimate the total installed cost. These factors ranged from 1.8 to 2.9 for a fabric filter and 2.3 to 3.2 for a wet collector.[1] Control equipment, fan and motor costs comprised 30 to 55 percent of the total installed cost. Installation and auxiliary equipment such as ducts, structures, instruments, etc. represent 20 to 40 percent of the total installed cost. Indirect charges amount to about 20 to 30 percent of the total installed costs depending on the size of the installation.

Since specific plant sites are not addressed, only very general cost values are provided as an approximation of actual costs. Many site-specific variables such as lack of space, insufficient structures, lack of required utilities, etc. affect these costs and the values presented here are only rough approximations and should not be used for budget purposes. In addition, hood costs, stacks, or the use of corrosion resistant materials have not been taken into account.

3.4.1 Fabric Filters

Installed costs for two types fabric filter systems are given in Figure 3-11. These costs are determined from base purchase price of the pulse jet and shaker type units, cost of the filter media, $\$3.75/m^2$ ($\$0.35/ft^2$ area), and fan/motor/drive system.[1] A nominal system operating pressure

3.4 REMOVAL EQUIPMENT COSTS AND INSTALLATION SCHEDULES

In this section, generalized installed and operating costs, and installation schedules are presented for fugitive particulate emission removal equipment. Costs are presented for continuous pulse-jet or mechanical shaker-type fabric filters. These units generally operate at air-to-cloth ratios of 4 and 1 m^3/sec per m^2 (8 and 2 acfm/ft^2) of cloth, respectively. Wet collectors are employed rather infrequently to control fugitive emissions and are usually the low-energy type, operating at pressure drops of 1500 to 2500 Pa (6 to 10 inches of water).

Installed costs given in this section include estimates of the cost of purchasing and installing the following items:

- control device
- ductwork
- fan/motor/drive
- instrumentation
- electrical equipment
- piping (for wet collectors)
- foundations
- structural modifications
- sitework

Labor and other material costs are estimated by using cost factors applied to 1976 base costs for the control devices and fan systems.[1,2] In addition to these installed costs, indirect costs for engineering studies, contractor fees, shakedown, spares, freight, taxes, and contingencies were added to provide a total cost.

Operating costs consist of the direct costs of utilities, maintenance, and operating labor. Energy requirements are based upon the required fan horsepower and the hours of operation. Fan horsepower is determined by the volumetric flow rate, fan efficiency, and the system pressure drop (see Section 3.3.4). Other energy requirements such as pumps,

REFERENCES FOR SECTION 3.3

1. Industrial Ventilation, a Manual of Recommended Practice. American Conference of Governmental Industrial Hygienists. Post Office Box 16153, Lansing, Michigan 48903. 1976. 14th Edition.

2. Recommended Industrial Ventilation Guidelines, NIOSH, U.S. Department of Health, Education and Welfare. Cincinnati, Ohio. January 1976.

3. ASHRAE Handbook and Product Directory, 1976 Systems. American Society of Heating, Refrigeration and Air Conditioning Engineers, Inc. 345 East 47th Street, New York, New York 10017. 1976.

4. Fugitive Emissions Control Technology for Integrated Iron and Steel Plants, Draft. Midwest Research Institute. Prepared for U.S. Environmental Protection Agency, Industral Environmental Research Laboratory. Contract No. 68-02-2120. Research Triangle Park, North Carolina. January 17, 1977.

5. Capital and Operating Costs of Selected Air Pollution Control Systems. GARD, Inc. EPA Contract 68-02-2072. Environmental Protection Agency, Research Triangle Park, North Carolina. March 1976.

6. Dalla Valle, J.M. Exhaust Hoods. Industrial Press, New York. 1946.

7. Silverman, Leslie. Velocity Characteristics of Narrow Exhaust Slots. Journal of Industrial Hygiene and Toxicology, 24, 267. November 1942.

The actual energy required must take into account the fan efficiency (generally 60 to 80 percent) and the motor efficiency (85 to 90 percent). Energy requirements to convey air through the hood and duct are usually relatively minor compared to the energy required to force the air through an emission control device. For example, the total pressure drop through a hood and vent system including entry and exit losses, wall friction, bends, etc. is generally on the order of 250 to 750 Pa (1 to 3 inches of water). The pressure drop through a fabric filter system is on the order of 1200 to 2000 Pa (5 to 8 inches of water).

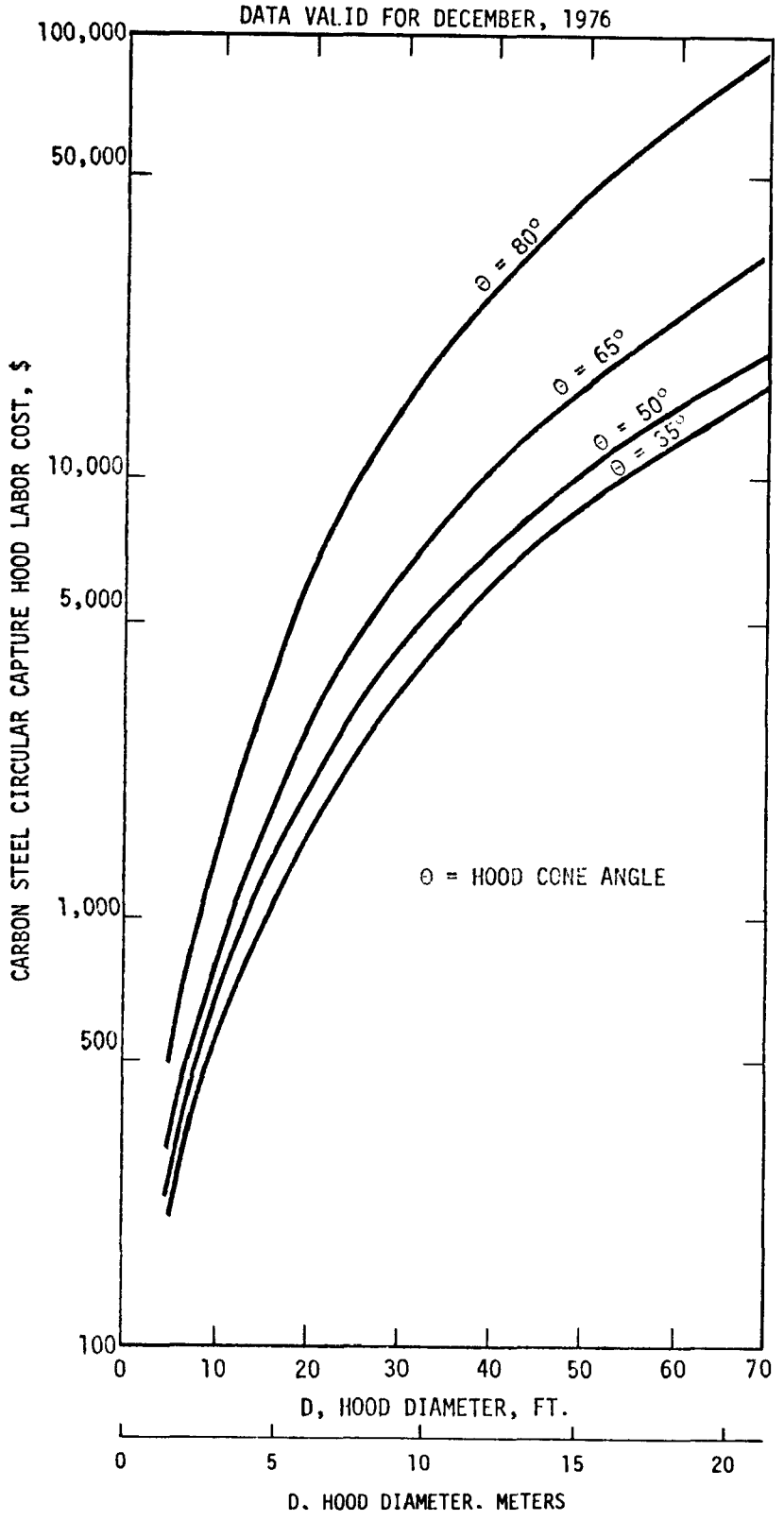

Figure 3-10. Labor cost for fabricated 10 ga. carbon steel circular capture hoods.

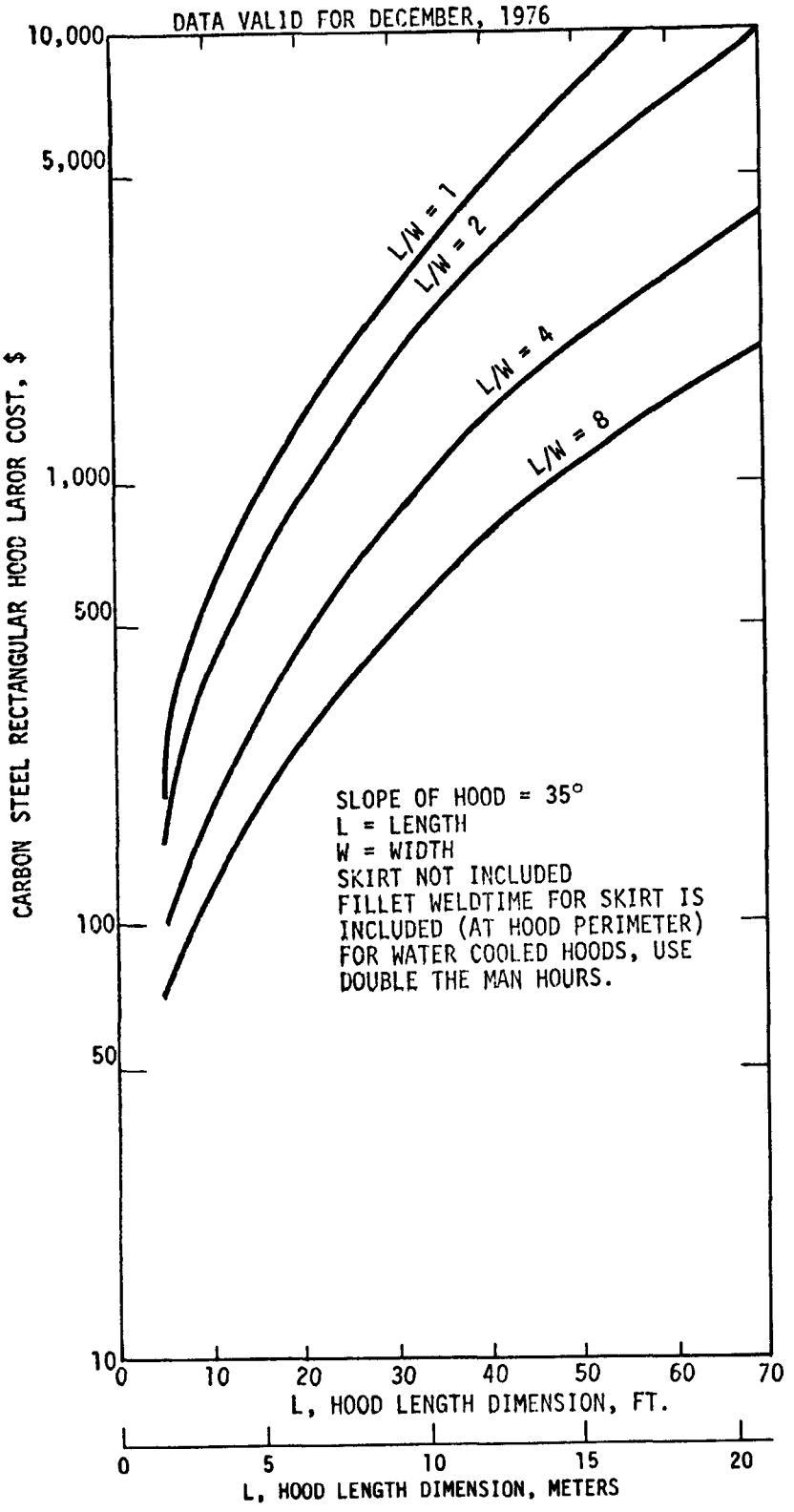

Figure 3-9. Labor cost for fabricated 10 ga. carbon steel rectangular capture hoods.[5]

costs may be estimated by multiplying the plate area by the thickness, the density and the cost of the material. An allowance of at least 20 percent of the calculated material should be allowed for waste in fabrication. Estimates of the labor required to fabricate hoods are presented in Figures 3-9 and 3-10 for rectangular and circular hoods, respectively. Delivery and erection at the site are not included.

Duct work associated with a hood system will cost between \$1060 and \$4200 per m^3/sec (\$0.50 and \$2.00 per acfm) installed, depending on type of material.

A fan, motor, and motor starter are also required in any capture system. Costs for fans vary not only with size but with pressure drop and design. For example, a fan constructed of carbon steel, sized for 26 m^3/sec (55,000 cfm) and a pressure drop of 500 Pa (2 inches of water) would be of light construction, require a 20 kW (30 hp) motor, and cost approximately \$320 per m^3/sec (\$0.15 per cfm). The same fan with a pressure of 3000 Pa (12 inches of water), heavy construction, and a 110 kW (150 hp) motor would cost approximately \$635 per m^3/sec (\$0.30 per cfm). The installed cost would amount to about one to two times the purchase cost.

3.3.4 Vent System Energy Requirements

The energy required to move a given amount of dust laden air away from a process is directly related to the quantity of that air and the resistance to flow that must be overcome. This relationship is expressed in the equation:

$$kW = 0.000997 \quad Q\Delta p \text{ - metric}$$

$$\left(\text{Air hp} = \frac{62.3\ Q\Delta p}{12 \times 33{,}000} \text{ - English}\right)$$

where Δp = pressure drop across fan in pascals, Pa (inches of water).

Q = actual air volume, m^3/sec (acfm)

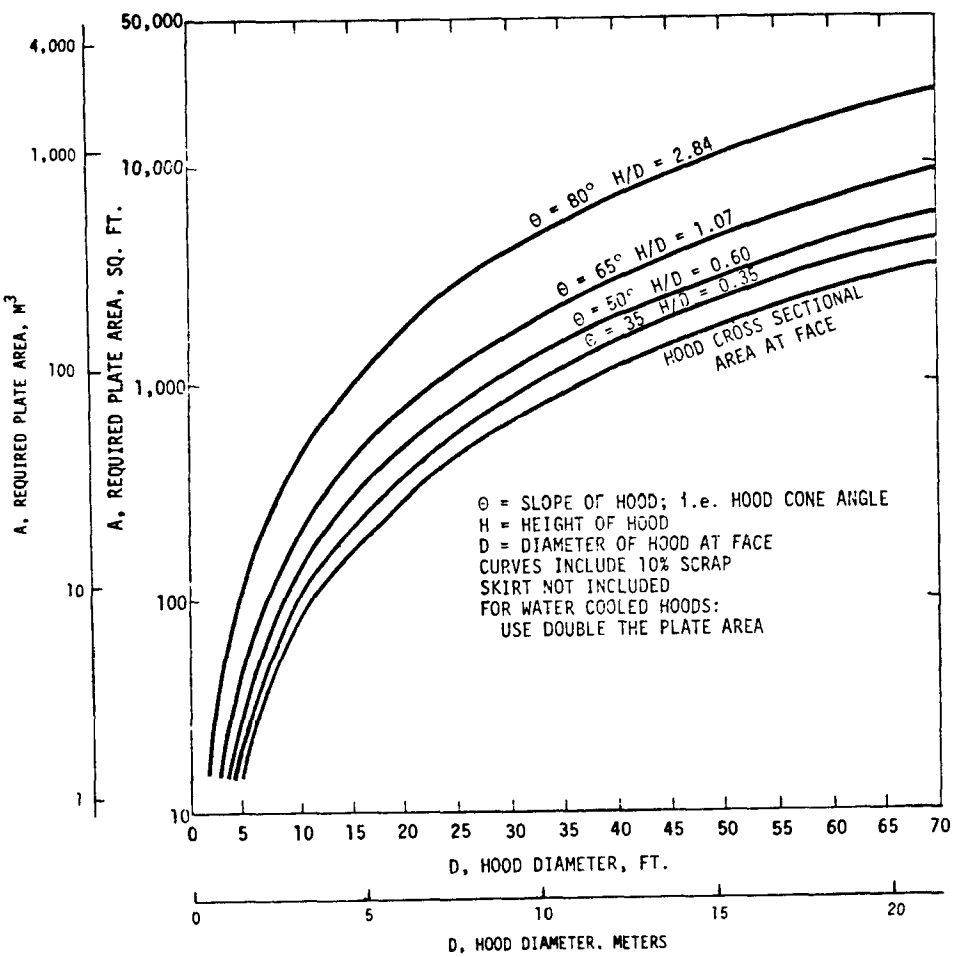

Figure 3-8. Circular hoods plate requirements.

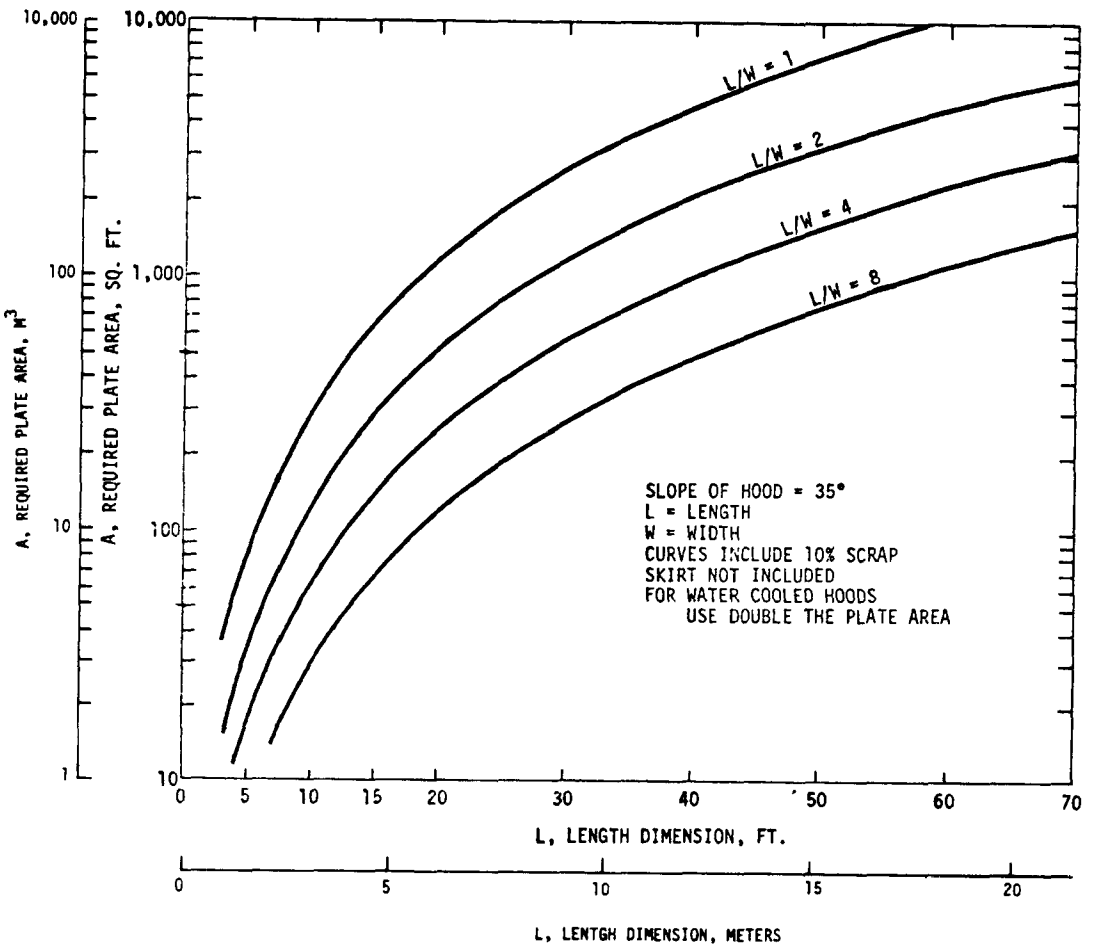

Figure 3-7. Rectangular capture hoods plate area requirements vs. hood length and L/W.

Maintenance of the processing equipment and of the hood itself also effects hood design. Hoods are sometimes dismantled to allow maintenance on the process and then not reassembled. Hoods are also subject to damage from cranes, loaders, and vehicles. Since they are not absolutely required for process operations, they may not be promptly repaired.

High temperature processes such as those found in the metallurgical industry also present hooding design problems. A tightly fitted hood must be able to withstand temperatures as high as 1370°C (2500°F). This involves cooling of the hood or use of a less tightly fitted hood which allows ambient air to enter the vent system. High temperatures can also cause distortion and leakage of improperly designed systems.

3.3.3 Capture System Costs

Good design of the capture devices can minimize air volumes, reduce system size and minimize the installed and operating costs. Hood and duct costs are composed of material costs ($ per unit weight of material), fabrication costs, and installation costs. These all vary directly with size and hood configuration.

Installation costs vary with materials of construction, and system size. Some contaminants are corrosive to certain types of materials, such as galvanized steel, and the system may require stainless steel or more commonly an epoxy coating or plastic for resistance to corrosion. Preliminary design data must be developed before costs can be determined, since both installed and operating costs vary greatly with system size and configuration.

Hood costs can be estimated by using Figures 3-7 through 3-10.[5] Figures 3-7 and 3-8 provide data on the plate area of a hood and the fabrication cost. Material

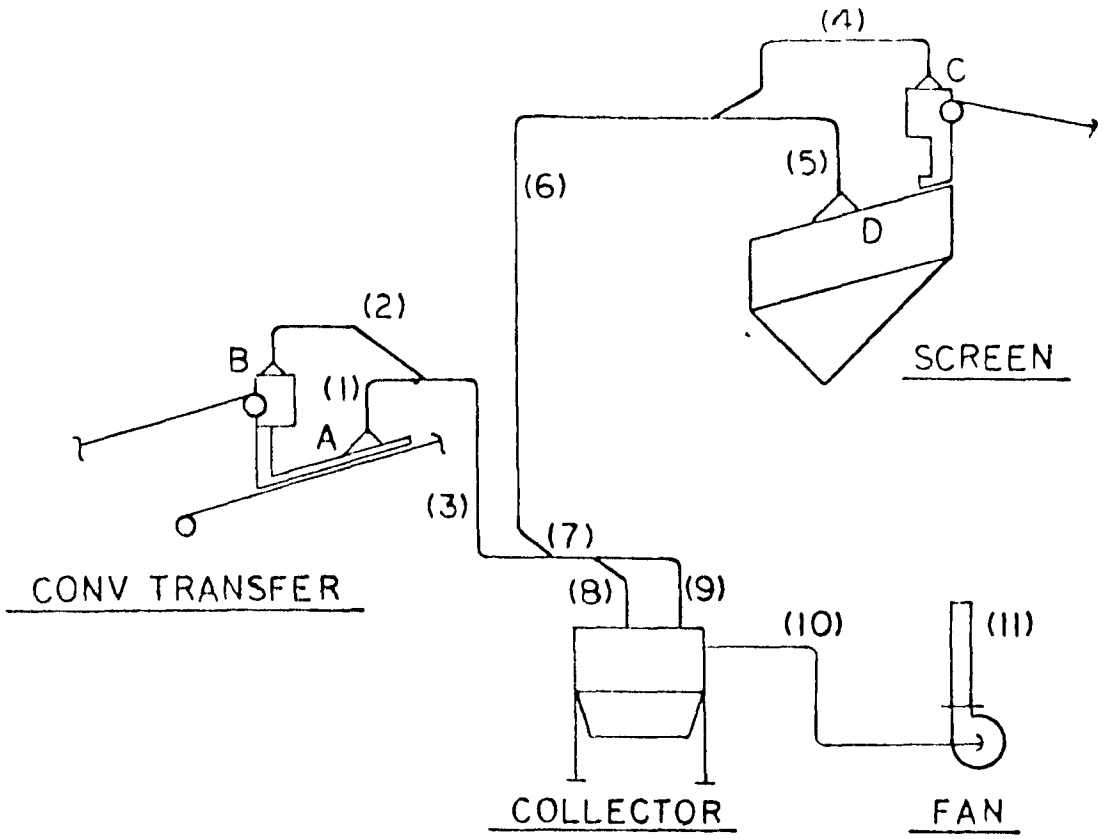

(2) Air Volume Determinations:

Hood	Source	Calculations	VP
(A)	Skirt Board	2.5' BW x 500 CFM/Ft.=1250CFM	1.25
(B)	Head Box	2.5' BW x 500 CFM/Ft.=1250CFM	1.25
(C)	Head Box	2.0' BW x 500 CFM/Ft_2=1000CFM	1.25
(D)	Screen	4'x12' x 50 CFM/Ft.=2400CFM	1.50
		5900CFM	

(3) Duct Sizing

Run	CFM	Duct Dia.	Area	Vel. FPM	VP
1	1250	8	0.3491	3581	0.80
2	1250	8	0.3491	3581	0.80
3	2500	11	0.6600	3788	0.89
4	1000	7	0.2673	3741	0.87
5	2400	11	0.6600	3636	0.82
6	3400	13	0.9218	3688	0.85
7	5900	17	1.576	3744	0.87
8	2640	11	0.6600	4000	1.00
9	3260	13	0.9218	3537	0.78
10	5900	18	1.767	3339	0.70
11	5900	17	1.576	3744	0.87

Figure 3-6. Example hood and duct system.

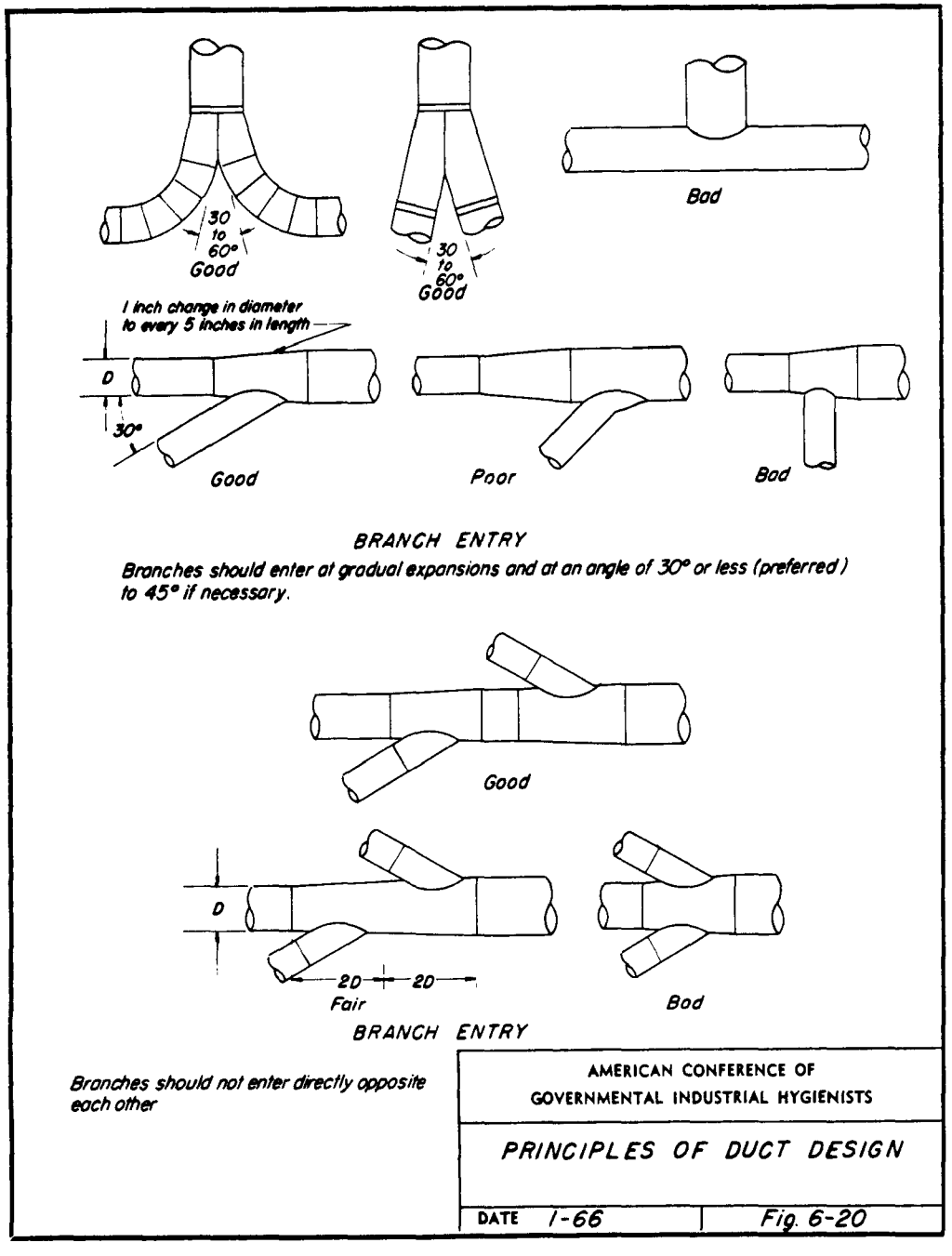

Figure 3-5. Typical duct configuration.

Reprinted by permission of "Industrial Ventilation A Manual of Recommended Practice."[1]

Table 3-1 (continued). VENTILATION RATES FOR TYPICAL INDUSTRIAL EQUIPMENT

Federal, State or Local Regulations Should be Consulted and Followed Where Higher Ventilation Rates are Specified

Operation	Ventilation		Usual Transport Velocity, Fpm
	Type of Hood	Air Flow	
Miscellaneous			
Packing, machines granulators, enclosed dust producing units	Complete enclosure	100-400 fpm indraft through inspection or working openings, but not less than 25 cfm per sq ft of enclosed plan area	3000
Packing, weighing	Booth	50-150 cfm per sq ft of open face area	3000
container filling, inspection	Downdraft	75-150 cfm per sq ft of dust producing plan area	3500

Reprinted by permission of "ASHRAE Handbook and Product Directory, 1976 Systems."

Table 3-1 (continued). VENTILATION RATES FOR TYPICAL INDUSTRIAL EQUIPMENT

Federal, State or Local Regulations Should be Consulted and Followed Where Higher Ventilation Rates are Specified

Operation	Ventilation		Usual Transport Velocity, Fpm
	Type of Hood	Air Flow	
Rock drilling Dry drilling (rock)	Special trap (see references)	60 cfm-vertical (downward) work 200 cfm-horizontal work	3500
Screens Vibrating Flat deck	Enclosure	150-200 fpm indraft through hood openings but not less than 25-50 cfm per sq ft of screen area	3500
Shakeouts Foundry	Enclosure	200 fpm through all openings in enclosure, but not less than 200 cfm per sq ft of grate area	3500
Spray coating	Booth-operator inside Booth-operator outside Booth-downdraft	100-200 fpm at booth cross-section 150-200 fpm at booth cross-section 100-200 fpm downdraft	1500-2000 1500-2000 1500-2000
Tanks, open surface			
Tumbling mills Hollow trunnion type	Exhaust connection by manufacturer	Use branch diameter same size as exhaust outlet. For round mills branch dia should be one-sixth dia of mill; for square mills branch dia should be 1 in. plus one-sixth side dimension of mill	3500-5000
Tumbling mills, drums, cages, barrels	Enclosure	400 fpm through openings but not less than 75 cfm per sq ft plan area	3500
Welding	Local hood with flange	6 in. from arc 250 cfm 6 9 in. from arc 400 cfm 8-10 in. from arc 600 cfm 10-12 in. from arc 1000 cfm	2000 4000
	Downdraft bench Booth	150-250 cfm per sq ft grille area 100 fpm at booth face	2000 2000

Reprinted by permission of "ASHRAE Handbook and Product Directory, 1976 Systems."

Table 3-1 (continued). VENTILATION RATES FOR TYPICAL INDUSTRIAL EQUIPMENT

Federal, State or Local Regulations Should be Consulted and Followed Where Higher Ventilation Rates are Specified

Operation	Ventilation		Usual Transport Velocity, Fpm
	Type of Hood	Air Flow	
Metalizing	Local hood	200 fpm at hood face	3500
	Booth	125-200 fpm at booth face	3000
Mixers	Enclosure	100-200 fpm through feed and inspection openings	3000-3500
Pharmaceuticals			
Blenders	Fully enclosed	100 to 200 fpm through opening	3500-3500
Coating pans	Hood	120 cfm exh 24-in. dia pan 60 cfm supply direct to pan Differential 60 cfm	3000
Centrifuges	Enclosure	250-300 fpm through opening	1500-2000
Hammer mills Oscillators Shakers	Local hood	200 fpm but not less than 50 cfm	
Mixers	Hood	Not less than 75 cfm per sq ft of plan area	2500-3500
Process kettles and tanks	Enclosure	100-250 fpm through opening or manhole	1500-2000
Pouring hoods			
Foundry	Side hood	200 to 300 cfm per linear ft of hood with slot velocities of 1500 fpm. Exhaust take-off every 8 to 10 ft	3500

Reprinted by permission of "ASHRAE Handbook and Product Directory, 1976 Systems."

Table 3-1 (continued). VENTILATION RATES FOR TYPICAL INDUSTRIAL EQUIPMENT

Federal, State or Local Regulations Should be Consulted and Followed Where Higher Ventilation Rates are Specified

Operation	Ventilation		Usual Transport Velocity, Fpm
	Type of Hood	Air Flow	
Ceramics			
Dry pan	Enclosure	200 fpm through all openings	3500
Dry press	Local at die	500 cfm	3500
	Local at die	500 cfm	3500
	At supply bin	500 cfm	3500
	Booth	100 fpm (face)	...
Cooling Tunnels (foundry molds)	Enclosure	75-100 cfm per running foot of enclosure	
Crushers and grinders	Enclosure	200 fpm through openings	3500
Furnaces			
Stationary melting pots for nonferrous	Enclosure	100-200 fpm at hood opening	1500-2000
Tilting or rocking melting for nonferrous	Canopy	3000-6000 cfm	1500-2000
Electric Arc for Steel	Hood attached to roof ring	2500 cfm per ton charged	2500-3500
Furnaces			
Forge (hand)	Canopy	200 fpm at face	1500
Granite cutting & finishing			
Pneumatic hand tools	Local hood	500 cfm	5500-6000
Surfacing machine	Local hood	500 cfm for tools up to 2.38-in. diameter 1000 cfm for 2.38-to 2.88-in. diameter	5500-6000
Grinders			
Polishers, buffers, etc.	Standard wheel hood		
Portable	Downdraft bench	Bench type, 2-400 cfm per sq ft of exhaust grille but not less than 150 cfm per sq ft of plan working area.	3500
	Booth	100 fpm at face	3500
	Booth	100-200 fpm indraft through opening in booth face	3000

Reprinted by permission of "ASHRAE Handbook and Product Directory, 1976 Systems."

Table 3-1. VENTILATION RATES FOR TYPICAL INDUSTRIAL EQUIPMENT[3]

Federal, State or Local Regulations Should be Consulted and Followed Where Higher Ventilation Rates are Specified

Operation	Ventilation		Usual Transport Velocity, Fpm
	Type of Hood	Air Flow	
Abrasive blast rooms (sand, grit, or shot)	Tight enclosure with air inlets (usually in roof)	60-100 fpm downdraft (long rooms of tunnel proportions 100 fpm crossdraft)	3500
Abrasive blast cabinets	Tight enclosure with access openings	20 air chages per minute but not less than 500 fpm through all openings	3500
Asbestos: Carding Spool winding	Enclosure Local Hoods	1600 cfm per machine 50 cfm per spool	3500 3000
Bagging: Open Bag Top	Booth or enclosure (provide spillage hopper)	Paper bags-100 cfm per sq ft open area Cloth bags-200 cfm per sq ft open area	3500 3500
Barrels-Drums (filling or removing material by scoop)	Local Hood	100 cfm sq ft of container cross-section	3500
	Booth	150 fpm at face	3500
Belt conveyors	Hood at transfer point	Belt speeds less than 200 fpm-350 per foot of belt width, but not less than 150 fpm through open area. Belt speeds over 200 fpm-500 cfm per foot of belt width but not less than 200 fpm through open area	3500
Bins(closed top)	Connect to bin top away from feed point	150-200 fpm through open area at feed area at feed points	3500
Bucket elevators	Tight casing required	100 cfm per sq ft of elevator casing cross-section	3500
Brick cutting and sizing (abrasive cut-off wheel used dry)	Local Hood Booth with saw at face of	500 cfm 150 fpm at face	3500 3500

Reprinted by permission of "ASHRAE Handbook and Product Directory, 1976 Systems."

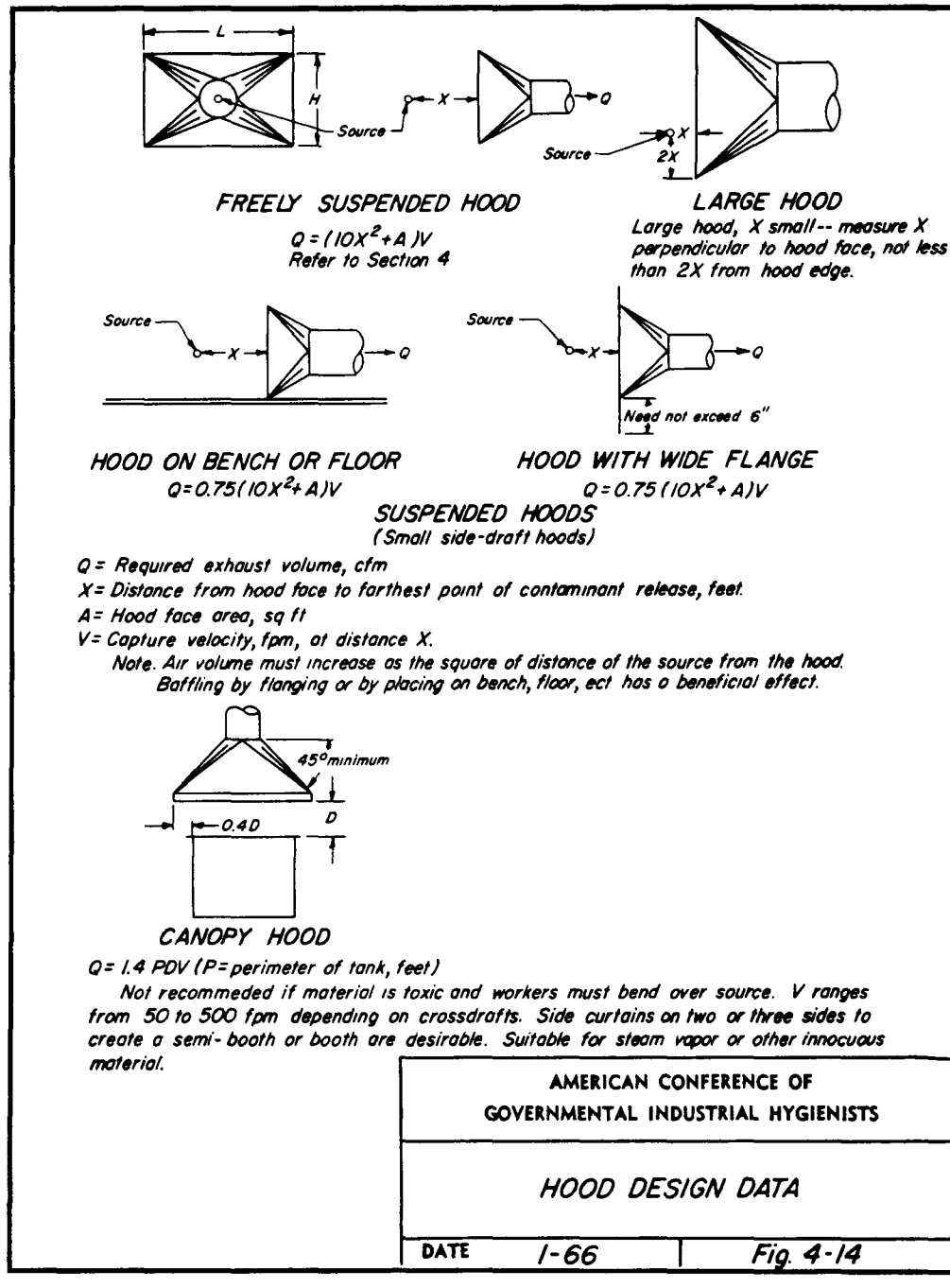

Figure 3-4. Hood design considerations.

Reprinted by permission of "Industrial Ventilation, A Manual of Recommended Practice."[1]

examples of proper and improper application of hoods. Figure 3-4 presents additional design considerations for various hood configurations.

Duct systems must compliment the hoods in efficiency of operation. Fittings and other components of the system should be adequate to prevent excessive pressure drop. Pressure drop balance and distribution contribute not only to system operation, but also to installation and operating costs. Duct systems must also maintain a velocity high enough to transport or convey the contaminant being collected. Table 3-1, from the "ASHRAE Handbook and Product Directory - 1976 Systems,"[3] shows transport velocities and vent flows required for certain processes. Figure 3-5 illustrates good practice for typical duct connections which minimize pressure drop. Elimination of sharp bends or sudden changes in cross-section are also desirable. Figure 3-6 illustrates an overall dust control system in which a screen and conveyor transfer point are vented to a collector.

When the duct system is sized and selected, its pressure drop can be calculated by a number of methods. Two of these methods are "Equivalent Feet of Duct" method and "Velocity Pressure Loss" method.[3] These calculations can be made manually, or via available computer programs.

3.3.2 Physical Constraints Effecting Capture System

While basic hood and ducting design are well understood, many site specific factors present practical problems to their design, installation and use. These problems center around the need for access to an operation for production and maintenance purposes. Thus a total enclosure type hood might be very desirable, but perhaps impractical from a operational viewpoint since personnel or material access is required.

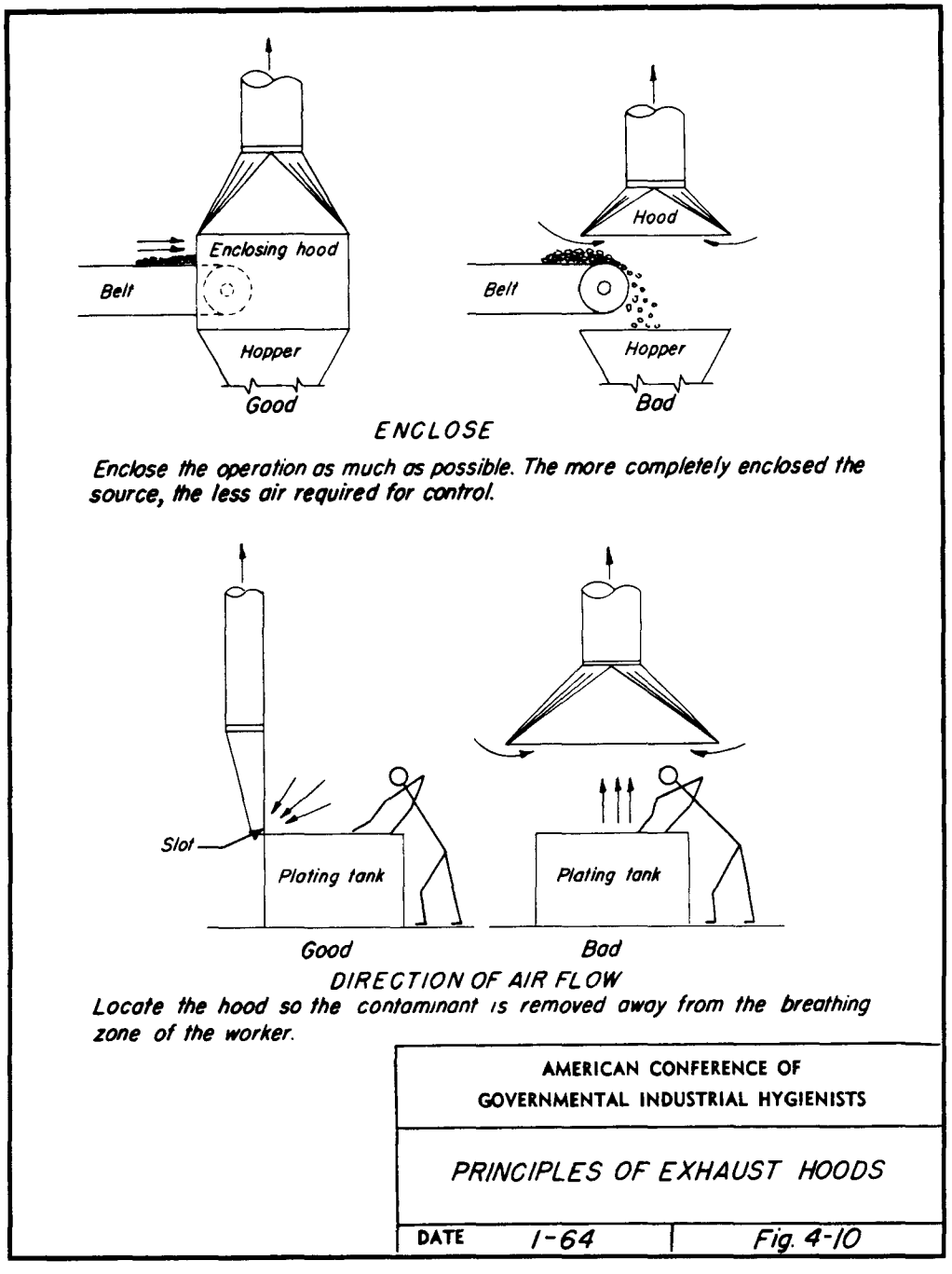

Figure 3-3. Example conveyor belt dump hood.

Reprinted by permission of "Industrial Ventilation, A Manual of Recommended Practice."[1]

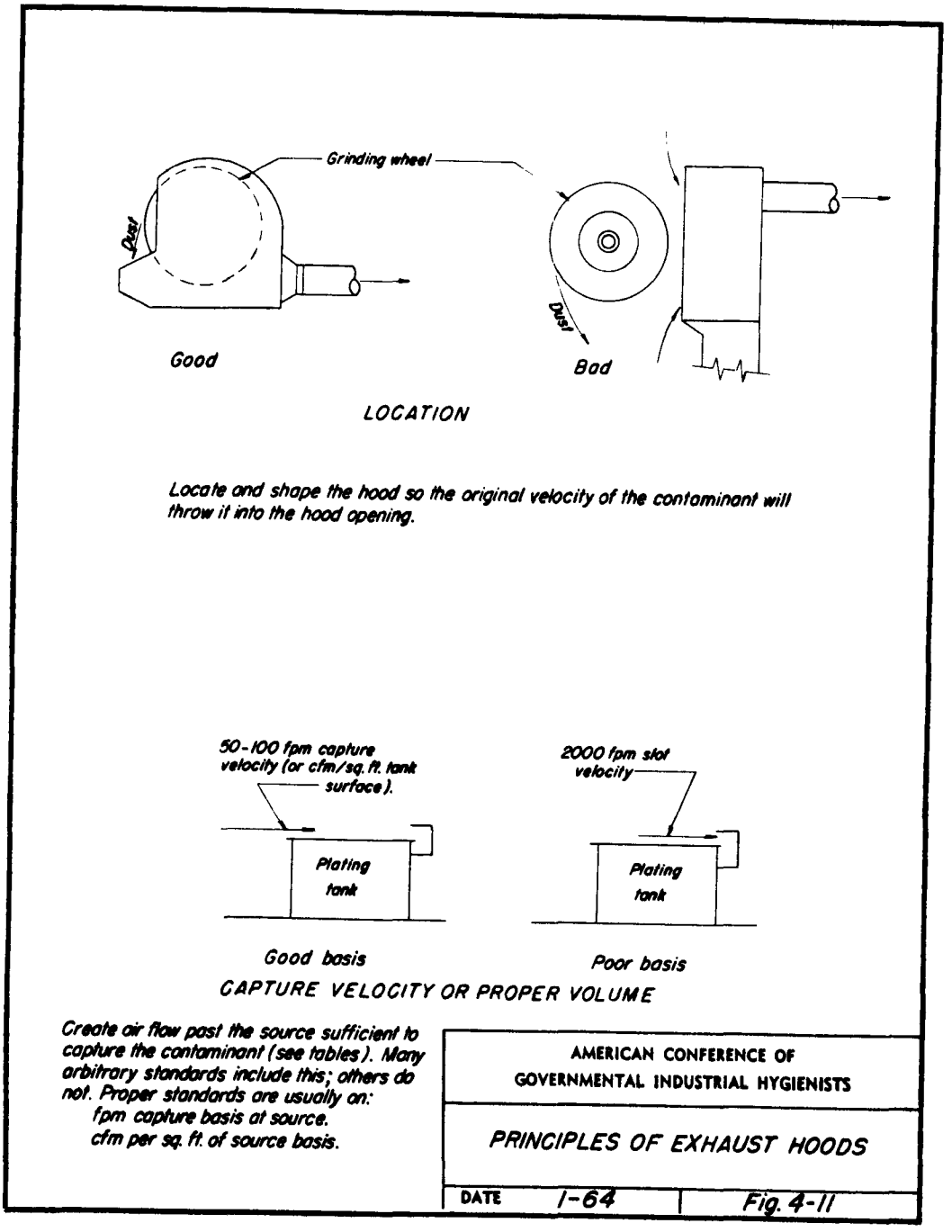

Figure 3-2. Grinding operation hood system.

Reprinted by permission of "Industrial Ventilation, A Manual of Recommended Practice."[1]

TYPE OF HOOD	ASPECT RATIO, $\frac{W}{L}$	AIR VOLUME
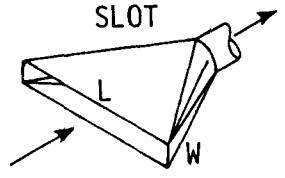	$\leq$ 0.2	Q = 3.7 LVX
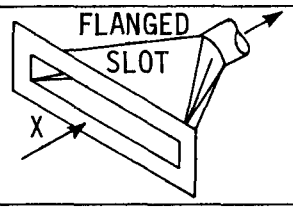	$\leq$ 0.2	Q = 2.8 LVX
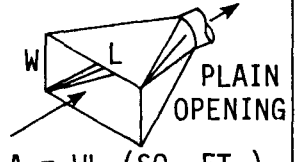 A = WL (SQ. FT.)	$\geq$ 0.2 ROUND OPENING	$Q = V(10X^2 + A)$
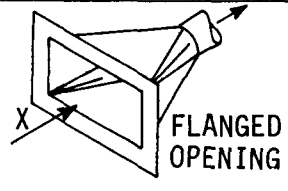	$\geq$ 0.2 ROUND OPENING	$Q = 0.75V(10X^2 + A)$
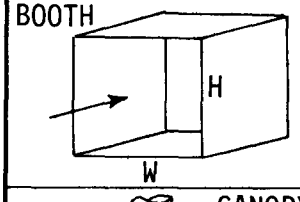	VARIOUS	Q = VA=VWH
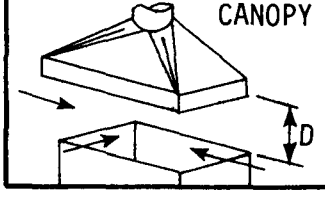	VARIOUS	Q=1.4 PDV P=PERIMETER OF WORK D=HEIGHT ABOVE WORK

Figure 3-1. General air flow design parameters for commonly used hoods.[1,6,7]

Reprint by permission of "Industrial Ventilation, A Manual of Recommended Practice."[1]

ventilation requires large air flow rates. When applying capture systems one of the most important considerations is the amount of air required for effective capture of the dust. The volume of air used relates to the capture system's open face area, and the larger the volume the higher the cost. Replacement air for building evacuation systems must be heated during cold winter months, and this also affects costs. Usually the determining factor for air quantity is the velocity required to capture a particular contaminant under a given condition. Some general design methods for determining air volumes and velocities required to capture fine particulates are given in Figure 3-1. As seen in this figure, the total air flow required is a function of the hood opening. This opening, in turn, is determined by the size of the process being vented.

Capture devices or hoods must have adequate flow rates and face velocities to capture the particulates as well as impose a minimum pressure drop on the system. One source states that a hood capture system ventilation rate of 0.6 Nm^3/sec (1200 scfm) is required in an alloy electric melt shop per ton of furnace capacity, including oxygen lancing.[4] Proper design of capture devices is well described in "Industrial Ventilation."[1] "Industrial Ventilation" states that, "many designers develop their hoods by mentally enclosing the operation completely, from there providing access and working openings as indicated." Local hoods that do not enclose or confine the contaminent are recommended only as a last resort because exhaust volumes are large and control can be so easily upset by cross-drafts in the area. Each application of a capture device must be designed and shaped to accommodate the process involved. Figures 3-2 and 3-3, also from "Industrial Ventilation," show some

3.3 CAPTURE OF THE IPFPE'S PRIOR TO CONTROL

The capture of fugitive emissions from sources both inside and outside buildings can usually be accomplished by applying industrial ventilation design practices.

When considering solutions to fugitive dust problems, several factors must be considered. Among the considerations are building codes, Occupational Safety and Health Administration (OSHA) requirements,[+] and National Fire Protection Association (NFPA) regulations. Many standards of design have been developed as a guide in applying systems for capturing fugitive emissions. The best and most widely used of these standards is "Industrial Ventilation, A Manual of Recommended Practice," published by the American Conference of Governmental Hygienists.[1] "Recommended Industrial Ventilation Guidelines," compiled by the National Institute of Occupational Safety and Health (NIOSH)[2] also has many specific guidelines for capture of fugitive dust, and the American Society of Heating, Refrigeration, and Air Conditioning Engineers have devoted several chapters of their "Guide to Data" related to this subject.[3] For unusual dust sources, however, the ingenuity of the designer must be utilized to develop a suitable and efficient capture system.

3.3.1 General Design Parameters

Systems of capture near the process (local hoods) are generally desirable from a cost and occupational exposure standpoint. However general ventilation of an entire building is receiving increased attention as a method of fugitive emission control because of the difficulty of capturing all of the emissions with local hoods while also allowing sufficient operating space. However total building ventilation may be undesirable since the entire building

---

[+] Federal Register, Vol. 37, No. 202. October 18, 1972.

REFERENCES FOR SECTION 3.2

1. Evaluation of the effect of water infusion of coal beds on respirable dust during mining operations. Bureau of Mines, RFP-J0366051, April 23, 1976.

2. Chepil, W.S. Soil conditions that influence wind erosion. U.S. Dept. Agr. Technical Bulletin No. 1185 1958.

conductive particulate matter. An ESP for particulate removal at a BOF process, provided sufficient reserve plate capacity is available, could be utilized to control emissions from the tapping operation. Wet ESP's and charged droplet ESP's can also be effective in controlling fugitive emissions.

Employment of existing primary point source control equipment to simultaneously control IPFPE sources is a viable economic alternative, provided sufficient reserve capacity is available to efficiently control both exhaust streams.

control because their widespread emission source area does not generally permit sufficient containment.

Fabric filters predominate as IPFPE add-on removal equipment because of their high collection efficiencies and their ability to return the collected material essentially unaltered to most process streams, which can in many cases be a considerable economic asset. Control efficiencies for fabric filters in excess of 99.9 percent are common for most IPFPE sources. Typical operating parameter ranges and installation schedules for fabric filters are presented with cost information in Section 3.4.

Centrifugal collectors find limited application because of their relatively poor collection efficiencies for small particles. They can sometimes be employed where relatively large particles predominate (e.g. primary crushing operations), or as primary large particle collection systems in series with fabric filters.

Wet collectors are less widely used as IPFPE sources because of the relatively high energy required to effectively collect the dilute, small particle exhaust streams characteristic of most sources and the wet contamination of the collected material, which may eliminate recycling to the process stream. They can be used for IPFPE exhaust streams which are high in moisture content (danger of blinding a fabric filter system), or where recycling the captured material in a dry condition is not required. Typical operating parameter ranges and installation schedules for wet collectors are discussed in Section 3.4.

The low conductivity of the particulate matter in many IPFPE's affectively excludes dry ESP's for control of those IPFPE sources. Exceptions include use of existing primary point source ESP's for IPFPE sources with sufficiently

ground or floor by vacuum systems will prevent them from becoming airborne. A full-time clean-up crew may be required in some industries. Also included is the optimization of the capture efficiency of the hooding systems of primary control devices for point sources. Examples include:

- precautions to ensure that a cupola is not overloaded, eliminating the possibility of backpressure from the primary control system and "puffing" fugitive emissions from the charging door opening
- maintenance of coke oven doors and seals to eliminate leaks during coking
- prompt repair of electric arc furnace hooding after damage by overhead charging crane
- conscientious system for periodic application of chemical suppressant to inactive storage piles and tailings areas
- increase of the vent rate of the canopy hood system for an electric arc furnace in a gray iron foundry
- prompt clean-up of spills from trippers of a clinker conveying system in a Portland cement plant.

3.2.3 Add-on Removal Equipment

Employment of add-on removal equipment involves initial containment and capture of fugitive process emissions, with subsequent removal by conventional particulate control devices (including centrifugal collectors, fabric filters, wet collectors, and electrostatic precipitators). Section 3.3 discusses the capture of IPFPE's prior to control. IPFPE sources which are amenable to control by add-on removal equipment are those which can be contained sufficiently to allow efficient capture of the particulate emissions generated. Candidate sources range from conveyor transfer points to roof monitors over foundry metal melting areas. Conversely, fugitive dust sources preclude add-on

With the wide range of characteristics available in commercial products, a chemical stabilizer can be selected with maximum efficiency for each fugitive dust or IPFPE control application. Some of the materials "heal" if the treated surface is disturbed, but many do not reform. The life of the treated surface[2] under natural weathering also varies widely with different chemicals. Selection of the appropriate material may require that several other criteria be checked for compatibility including effect on vegetative germination and growth (in the case of tailings areas), application method, and possible contamination of material being protected.

3.2.1.2 - Confinement - Confinement by covering or enclosure basically involves the partial or complete seclusion and/or shielding of the fugitive dust or IPFPE source. The design strategy is to effectively prevent the fugitive particulate matter from becoming air-borne from disturbance by the wind or disturbance by the mechanics of the operation involved. These control measures range from small enclosures over conveyor transfer points for protection from the wind and turbulence from the moving belt, to building structures for complete confinement of material storage areas. Other examples include: conveyor system enclosures; weighted-tarpaulin covers for inactive material storage piles; partial windbreaks located in the prevailing upwind direction from limestone quarry surge pile areas; and partial open ended shelters with shrouds for railroad car loading and unloading.

3.2.2 Operation and Maintenance Practices

Control by utilizing proper operation and maintenance practices primarily involves the elimination of fugitive emissions from process upsets, leaks, and poor "housekeeping". In addition, prompt clean-up of spills on to the

Application of oil to the roads is also a common practice; however, the water pollution potential of applying excessive amounts of oil should be considered, as described in Section 3.1.3.

If the use of water can be tolerated, it can be sprayed at crusher and shaker screen locations to keep the material moist at all stages of processing. The addition of water may, however, cause blinding of the finer size screens, thereby reducing their efficiency. There also may be instances when the use of water cannot be tolerated, such as when specifications for highway aggregates allow only a certain moisture content.

The effect of watering on dust emissions from active material storage piles is quite temporary, due to continuous turnover of material which exposes new surfaces to wind erosion. In addition, watering sometimes reduces ability to handle the material easily. Excessive watering can increase energy requirements for processes which involve drying the aggregate, such as asphalt concrete production.

Various chemicals may be added to the water or applied separately in the form of spray or foam to improve binding of the desired material. These chemicals utilize different properties for suppression and are generally categorized by their composition -- bituminous, polymer, resin, enzymatic, emulsion, surface-active agent, ligninsulfonate, latex, etc. It is estimated that over 100 chemical products are presently marketed or are under development specifically as dust control agents.[1] Many of these are by-products or wastes from the production of other materials. A partial list of these chemicals has been compiled and is presented in Appendix B.*

---

* Mention of company or product names is not to be considered as an endorsement by the U.S. Environmental Protection Agency.

3.2 IPFPE CONTROL OPTIONS

Control technology for IPFPE sources includes a variety of options which can be categorized within the major areas of: preventative procedures, operation and maintenance practices; and add-on removal equipment. The following sections discuss these options and indicate their areas of application.

3.2.1 Preventative Procedures

Preventative procedures essentially prevent the fugitive emissions from becoming initially airborne. Included are wet suppression by water and/or chemicals and confinement by covering and enclosure.

3.2.1.1 Wet Suppression - Wet suppression methods can be effectively employed for control of emissions from paved and unpaved roads, material storage, tailings, material transfer points, and crushing and screening operations. Watering provides a low first cost, but often relatively temporary, control measure by imparting a direct cohesive force of a film of moisture in holding surface particles together. In addition, for unpaved roads, storage piles, and tailings, watering is effective in forming a thin surface crust that is more compact and mechanically stable than the material below and which is less subject to dusting even after drying.

Haul roads at mines and roads at industrial processing facilities are routinely watered for dust suppression during all periods when water on the road surface does not create a safety hazard (generally when temperatures are above freezing). The water is usually applied by trucks equipped with a pump and directional nozzles which spray the road surface and adjacent shoulders and berms. Fixed pipeline spray systems have also been used on main haul roads that are relatively permanent at mines and large industrial facilities.

REFERENCES FOR SECTION 3.1

1. Freestone, F.J. Runoff of Oils from Rural Roads Treated to Suppress Dust. Edison Water Quality Research Laboratory. Edison, N.J. For U.S. Environmental Protection Agency, Research Triangle Park, North Carolina, Program Element 1B2041. October, 1972. 29 p.

2. Armbrust, D.V. and J.D. Dickerson. Temporary wind erosion control: cost and effectiveness of 34 commercial materials. J. Soil Water Conserv. 26 (4): 154-157 1971.

emissions, and noise are important considerations for selecting IPFPE control systems. In some cases, the secondary impact can be greater than the fugitive emission impact which is being controlled. For instance, the original problem may be exceeded by poor procedures for disposal of the fugitive emissions that were collected in a fabric filter (when return to the processing system is not feasible) by dumping the collected materials into an open truck, hauling them in an open truck to a landfill, and dumping them into a landfill which does not have adequate protection from erosion by wind and from surface runoff.

As for stack emissions, wet collectors for IPFPE sources are not utilized as often as dry collectors because they reduce the possibility of returning the collected wet particulate to the controlled operation and because they create a potential secondary water pollution problem. Depending upon the characteristics of the emissions being controlled, wastewaters from wet collection devices may have a high metal content, undesirable pH, or other undesirable chemical characteristics, even after primary settling. Control of pH, coagulation and precipitation and other secondary or tertiary treatment may ultimately be required to meet discharge limitations.

Another example of secondary multi-media effects is the application of excessive amounts of waste crank-case oil (which commonly contain lead additives from the gasoline) on unpaved roads for fugitive dust suppression. While this reduces fugitive dust emissions, it can result in undesirable water pollution resulting from surface runoff. Some oil-containing dust particles are also carried by wind and vehicular traffic to roadside areas.[1,2]

the way of insulation or reheat for condensation protection. Exceptions such as exhaust streams containing organic mists or tar droplets may preclude the use of fabric filters because of the probability of blinding; a low-energy wet collector or a movable fiber mat could be likely alternatives.

The physical and chemical characteristics and associated toxicity of the fugitive particulate emission compositely help to determine the type of control system. The most critical physical characteristics of the particulate matter as they relate to the type and material of construction of the control device are abrasiveness, hardness, hygroscopy, and density, while the most critical chemical characteristic is corrosiveness. For example, a fabric filter would be limited in controlling a hygroscopic material due to the tendency for blinding, while a corrosive emission would perhaps dictate the need for stainless steel or synthetic materials of construction. The particulate emission's toxicity greatly influences the determination of the efficiency of the capture and control system required to yield an ambient air impact, including background, which is below the prescribed toxicity limits for that material. For instance, a fabric filter or a very high efficiency scrubber would take preference over a high efficiency multiclone in control of fugitive emissions for an asbestos mill, a lead mill, a lead smelter, and other sources of toxic or carcinogenic emissions. Capture efficiency of the particulate pick-up system is frequently determined by occupational hygiene considerations.

3.1.3 Multi-Media Impacts

The secondary multi-media environmental effects which the control of fugitive emissions can create via solid waste disposal, water pollution, generation of additional fugitive

installing control equipment. For example, control measures necessary for a storage pile of fine material near a public road may be different if the same storage pile were well within the plant boundaries. Determination of the IPFPE's impact on ambient air quality is discussed in Section 4.

3.1.2 IPFPE Exhaust Stream Characteristics

The major exhaust stream characteristics which collectively help to determine the control technology to be employed include:

- particle size distribution
- temperature of the exhaust stream
- moisture content of exhaust stream and presence of corrosive gases
- physical and chemical characteristics of the particulate and its associated toxicity

The particle size distribution for many IPFPE's is predominantly below 5 μm, which in the case of add-on control system often dictates the need for a fabric filter. Exceptions are, of course, those sources having emissions with a relatively large mean particle diameter, such as primary aggregate crushing operation emissions which can be sometimes sufficiently controlled by high efficiency multiclones.

Most process fugitive emission exhaust streams are at either in-plant or ambient temperatures. Even the roof monitor exhausts above a metal melting operation are generally below 65°C (150°F) after dilution with surrounding in-plant air. Consequently, provisions for excess temperatures, such as heat resistant fabric filter material, are generally not required. Similarly, most IPFPE exhaust streams have approximately the same moisture content as the ambient or in-plant air; consequently, little is generally needed in

Higher capital costs and longer installation schedules are often required for application of IPFPE systems to existing plants. For example, improvement in the capture efficiency of an electric arc furnace hooding system to reduce the fugitive emissions during charging might require extensive design modifications imposed by the physical constraints of an existing overhead charging crane. The custom hooding and ducting system required for such a design would cause increased capital equipment costs and construction labor costs (caused by longer construction periods), as compared with a new facility in which the hooding system could be designed as an integral part of the furnace-charging crane design. Assuming equivalent control efficiencies, retrofit systems could require from one to three times the installation time and capital cost of a new system depending on specific site conditions.

Another consideration regarding the age of a facility is its remaining life and for many facilities, production capacity factor. The capacity factor represents the ratio of actual annual production to potential annual production, and for most industries, this factor decreases with time (due to equipment wear and the construction of newer more efficient facilities). Remaining plant life and capacity factor are important primarily when cost/benefit considerations are being made. For example, careful analysis must precede installing extensive fugitive emission control equipment on an old cement facility which is scheduled for shut-down in a few years and is currently operating below capacity.

The location of the facility and the IPFPE source within the facility can be a further factor in determining the control techniques to be employed and the priority for

3.0 CONTROL TECHNOLOGY FOR SOURCES OF IPFPE

3.1 CONSIDERATIONS FOR SELECTION OF CONTROL TECHNIQUES

Selection of the control technologies for process fugitive emission sources involves the consideration of a variety of factors, including those involving the industrial processing facility, the IPFPE exhaust stream characteristics, and secondary multi-media impacts. Assessment of these factors on a site-specific basis is required to determine control effectiveness, resulting multi-media impact, and cost, and to select the optimum control technique. Most often the need for maximum emission control dictates the need for the best available control technology; however, there are specific situations where consideration can be given to reasonably available control technology based on a cost/benefit analysis.

3.1.1 Facility Factors

The ease of control at a facility varies with its age and basic design. An IPFPE control system for a new plant can be integrally incorporated into the overall design of the plant, whereas a retrofit application requires that the system be adapted to the configurations of the existing plant. The retrofit system must thus be built within fixed space limitations and in a manner that does not interfere with operation of the process. In general, the more congested the plant layout is, the harder it is to retrofit most IPFPE control systems.

REFERENCES FOR SECTION 2.12

1. Simmons, F.A., Charlotte H. Miller. Characterization of Sawdust and Shavings for Pulp. U.S. Department of Agriculture, Forest Products Laboratory, Forest Service. Report No. 2212. March 1961.

2. Industrial Environmental Health, The Worker and the Community. Academic Press. New York and London. 1972.

3. Bulgrin, E. H. Wood. McGraw-Hill Yearbook of Science and Technology. McGraw-Hill, New York. 1974.

4. Observation made from plant tour of Broyhill Furniture manufacturing plant. September 3, 1976.

Fugitive emissions from sawdust storage piles can be controlled by wet suppression. However, when it is possible, trucking the waste away as soon as possible can substantially reduce the fugitive emissions generated at these storage piles. Additional fugitive control can be attained by directly blowing sawdust into a boiler or to a particle board facility.

For reasons stated earlier in this chapter, sawing, planing, and sanding operations are normally controlled in furniture manufacturing plants. Thus, the need for fugitive control technology at these operations is unnecessary.

The wood waste storage bin vent is usually partially controlled by a screen. If this screen is replaced by a fabric filter sock, the amount of fugitive emissions released can be significantly reduced. The use of telescopic tubes during loadout from the storage bin to trucks will reduce freefall distance and thus the amount of fugitive emissions generated. This coupled with a canvas covered truck and use of side curtains will give additional control efficiency.[4] Other means of control would be enclosure of the loadout area with the possibility of also venting to a baghouse or cyclone.

Table 2-60. CONTROL TECHNIQUES FOR LUMBER AND FURNITURE INDUSTRY IPFPE SOURCES

Industry: Lumber and Furniture	Negligible emissions	IPFPE source typically uncontrolled	FUGITIVE EMISSIONS CAPTURE AND CONTROL METHODS														
				Preventative procedures and operating changes							Capture methods				Removal equipment		
			Control technologies identified in Section 2.1	Wet suppression (water and/or chemical)	Confinement by enclosure	Better control of raw material quality	Better control of operating parameters and procedures	Improved maintenance and/or construction program	Increase exhaust rate of primary control system	Process change (thin saw blades/wet debarking)	Fixed hoods, curtains, partitions, covers, etc.	Movable hoods with flexible ducts	Closed buildings with evacuation		Fabric filter	Scrubber	Cyclone
Sawmill																	
1. Log debarking				o						o	+		+		+		+
2. Sawing										+	+		+		+		
3. Sawdust pile loading, unloading and storage			✓	o			+										
Furniture Plant																	
4. Wood waste storage bin vent															+		
5. Wood waste storage bin loadout					x		o						+		+		+

x Typical control technique.

o In use (but not typical) control technique.

+ Technically feasible control technique.

tion of fugitive emissions generated during these operations.

Approximately 91 percent of particulates from sawing operations at lumber yards are greater than 991 μm.[1] Few of these sawdust particles may be expected to be less than 30 μm. Therefore, is is doubtful that much of the particulates remain airborne.

Data collected in a western red cedar furniture factory equipped with exhaust ventilation on most wood working equipment showed most suspended particulates in the working environment to be less than 2 μm in diameter.[2]

2.12.5 Control Technology

Control technology options for lumber and furniture production IPFPE sources (except plant roads covered in Section 2.1) are presented in Table 2-60. Specific dust control systems for the various handling operations are discussed in the following paragraphs.

Since drum debarkers, bag barkers, and hydraulic barkers are all wet process, they are in themselves a good method for reducing fugitive emissions during the debarking process. If logs can be kept in wet storage prior to debarking, fugitive emissions will be miminal during this process. If wet storage is not possible, enclosure of the debarking operation or fixed hoods with ventilation to baghouses or cyclones is an alternative.

Fugitive emissions from sawing can be controlled in several ways. Thinner saw blades will reduce the amount of fugitive emissions generated. This also has an economical benefit since it results in a more efficient use of lumber.[3] Fixed hoods or building evacuation to fabric filters will also help control fugitive emissions.

furniture plant windows and ventilation system. As a result, fugitive emissions from individual processes are essentially negligible. Management's willingness to provide and maintain good working conditions and Occupational Safety and Health Administration (OSHA) regulations are most likely the two basic reasons for such good control of emissions.

2.12.3 Example Plant Inventory

The example plant inventory for the lumber and furniture industry is presented in Table 2-59. The Table presents potential fugitive emission quantities from both the lumbering and furniture manufacturing processes. The plant inventory is not meant to present a typical plant situation, but merely a potential set of circumstances.

The emission inventory is based on a log yard which receives 740,000 Mg or 350,000 m^3 (820,000 tons or 150,000,000 bd. ft.) per year and a furniture manufacturer which requires 4100 Mg or 7100 m^3 (4,500 tons or 3,000,000 bd. ft.) of lumber per year. Total fugitive emissions from the sawmill and furniture plant were 176 Mg (191 tons) and 2 Mg (3 tons) respectively.

Not included in the inventory are fugitive particulate emissions from plant haul roads. These sources may be calculated using procedures outlined in Section 2.1.

Major sources of emissions from the lumber and furniture industry appear to be sawing, wood waste storage, and wood waste loadout.

2.12.4 Characterization of Fugitive Emissions

Fugitive particulate emissions from sawmills consists primarily of broken bark particulates and sawdust from sawing. Dirt and dust that are embedded in the bark also become airborne when the bark is broken and also during unloading, dragging, debarking, and storage operations. Very limited data are available concerning the characteriza-

Table 2-59. IDENTIFICATION AND QUANTIFICATION OF POTENTIAL FUGITIVE PARTICULATE EMISSION POINTS FOR THE LUMBER AND FURNITURE INDUSTRY

Source of IPFPE	Uncontrolled fugitive emission factor	Emission factor reliability rating	Model plant fugitive emission inventory	
			Operating parameter, Mg/yr (tons/year)	Uncontrolled emissions Mg/yr (tons/yr)
Sawmill				
1. Log debarking	0.012 kg/Mg of logs debarked[a] (0.024 lb/ton of logs debarked)	E	Logs debarked 740,000 (820,000)	9 (10)
2. Sawing	0.18 kg/Mg of logs sawed[a] (0.35 lb/ton of logs sawed)	E	Logs sawed 650,000 (720,000)	117 (126)
3. Sawdust pile loading, unloading, and storage	0.5 kg/Mg sawdust handled[b] (1.0 lb/ton sawdust handled)	E	Sawdust handled 100,000 (110,000)	50 (55)
Furniture Manufacturing				
4. Wood waste storage bin vent	0.5 kg/Mg wood waste stored[b] (1.0 lb/ton wood waste stored)	E	Wood waste stored 1,360 (1,500)	1 (1)
5. Wood waste storage bin loadout	1.0 kg/Mg wood waste loaded out[b] (2.0 lb/ton wood waste loaded out)	E	Wood waste loaded out 1,360 (1,500)	1 (2)

[a] Estimate based on material balance of the waste produced by the specific operation and engineering judgement of the amount which becomes airborne.

[b] Engineering judgement based on observations on plant visits. It is recognized that in some plants this may be more of a severe problem.

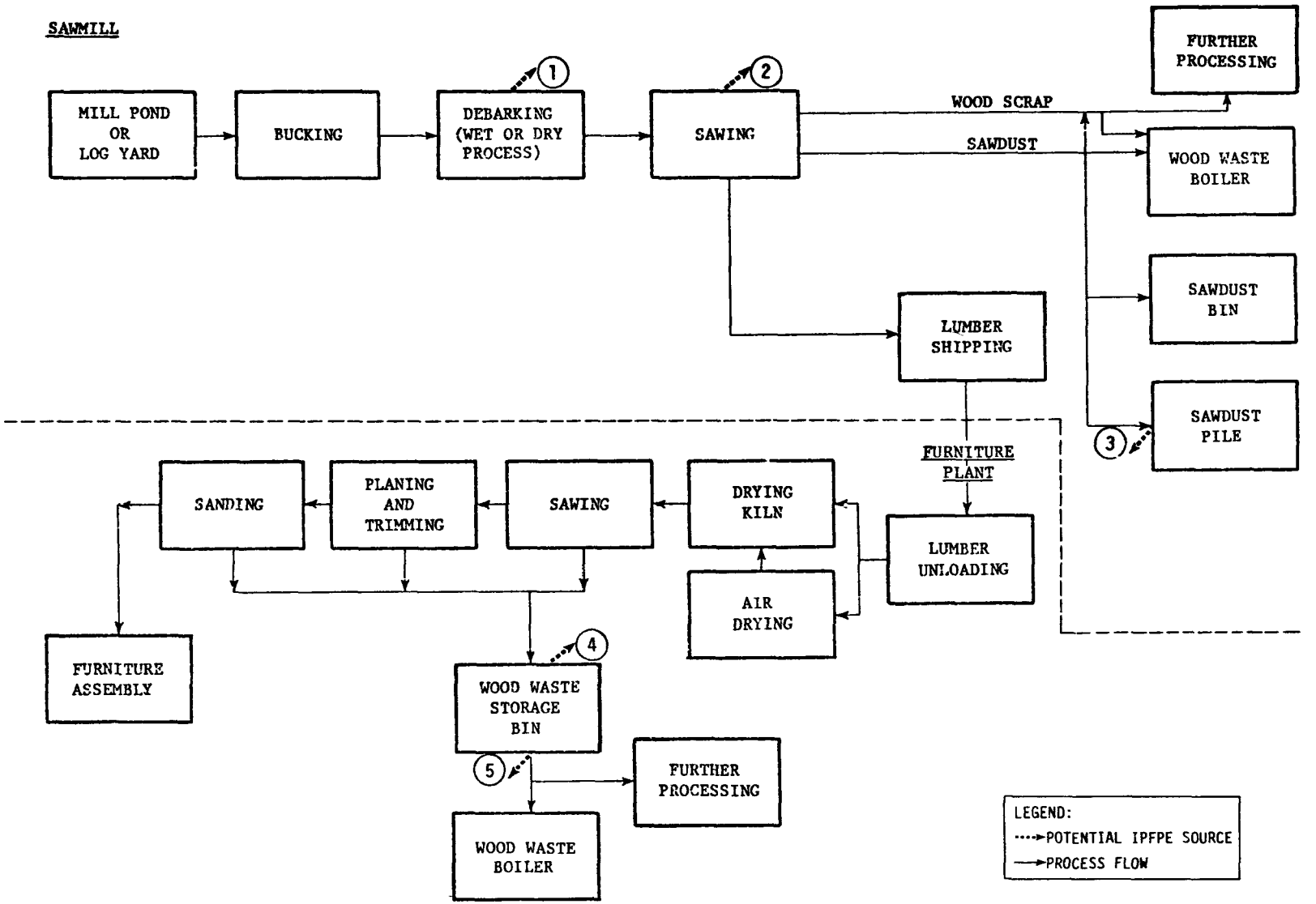

Figure 2-22. Process flow diagram for lumber and furniture production showing potential industrial process fugitive particulate emission points.

At this point, all of the assembled pieces are put together and minor sanding (by hand) may be necessary. Finishing operations usually involve a series of surface coatings and drying. After the finished pieces are completed and inspected, they are packaged and shipped to the customer.

A process flow diagram for lumber and furniture production is shown in Figure 2-22. Each potential process fugitive emission source is identified and explained in Table 2-59. A dust source which may be found at lumber and furniture plants, but not specifically included in the Figure or Table is plant roads. Proper evaluation of this emission category is explained in Section 2.1.

2.12.2 IPFPE Emission Rates

Table 2-59 presents a summary of uncontrolled emission factors for sawmill and furniture manufacturing IPFPE sources. Since these are potential uncontrolled emission rates, the site-specific level of control must be considered for application to a specific sawmill or furniture manufacturing plant.

The fugitive emission factors are based solely on best engineering judgement and material balance information obtained during plant visits. Thus, listed emission factors are at best order of magnitude estimates.

Sources of fugitive emissions at the sawmill are generally debarking, sawing, and sawdust handling operations. Log handling and bucking are negligible sources of fugitive emissions.

Most processes such as planing, sanding, and sawing within furniture manufacturing plants are normally controlled by hoods and various other vacuum pick-up devices which are ducted to cyclones and/or fabric filters. Emissions which escape these hoods and pick-up devices are minimal. Insignificant amounts are emitted through the

2.12 LUMBER AND FURNITURE INDUSTRY

2.12.1 Process Description

The raw materials for a furniture plant may be either logs or cut lumber, depending on the volume and type of final product.

At the sawmill, the cut logs are either stored in a log pond or stacked on the ground. If logs are too long to easily handle, they are cut to smaller lengths. This process is called bucking. The next process is debarking. There are five types of machines used for this: drum barkers, ring barkers, bag barkers, hydraulic barkers, and cutterhead barkers. The ring and cutterhead barkers are dry processes; the other three use water. After debarking the logs are cut to required lengths and then cut lengthwise into standard sizes. After cutting, the lumber is dried either by air or in a kiln. After drying, the lumber is transferred to the furniture plant.

At plants receiving cut lumber, the lumber may be stacked and air dryed or loaded onto carts and fed into a kiln. The natural moisture is about 60-70 percent and kiln drying reduces it to 5-8 percent. This is necessary in order to prevent warping or shrinking of furniture.

The manufacture of furniture can be divided into five main areas: rough milling, finish milling, planing, sanding, assembly, and finishing.

The purpose of rough milling is to cut the lumber to the approximate length and width and to remove the natural defects in the wood. Operations involved may include sawing, planing and molding. Finish molding may include sawing, shaping, lathe work, mortising, and routing. Sanding is usually done by a machine rather than by hand. Assembly involves gluing and stapling the pieces together.

REFERENCES FOR SECTION 2.11

1. Open Dust Sources Around Iron and Steel Plants, Draft. Midwest Research Institute. Prepared for U.S. Environmental Protection Agency, Industrial Environmental Research Laboratory. Contract No. 68-02-2120. Research Triangle Park, North Carolina. November 2, 1976.

2. Evaluation of Fugitive Dust from Mining, Task 1 Report. PEDCo-Environmental Specialists, Inc., Cincinnati, Ohio. Prepared for Industrial Environmental Research Laboratory/REHD, U.S. Environmental Protection Agency, Cincinnati, Ohio. Contract No. 68-02-1321, Task No. 36, June, 1976.

3. Chalekode, P.K., and J.A. Peters, Assessment of Open Sources, Monsanto Research Corporation, Dayton, Ohio. (Presented at Third National Conference on Energy and the Environment. College Corner, Ohio. October 1, 1975). 9p.

4. Environmental Pollution Control at Hot-Mix Asphalt Plants. The National Asphalt Pavement Association. Information Series 27.

5. Process Flow Diagrams and Air Pollution Estimates. Committee on Air Pollution, American Conference of Governmental Industrial Hygienists. Cincinnati, Ohio. 1973.

6. Hardison, L.C. and Carrol A. Greathouse. Air Pollution Control Technology and Costs in Nine Selected Areas. Industrial Gas Cleaning Institute, Inc. Prepared for U.S. Environmental Protection Agency. Contract No. 68-02-0301. Durham, North Carolina. September 30, 1972.

m^3 per second (3,000 scfm). Typical volume rates for ventilation of these secondary sources are 1.4-1.8 m^3/sec (3000-4000 acfm).[6]

A conscientious maintenance and housekeeping program to reduce the exposure time for spills and minimize leaks in conveyor and screening exhaust systems is an important additional control measure.

Table 2-58. CONTROL TECHNIQUES FOR ASPHALTIC CONCRETE MANUFACTURING IPFPE SOURCES

Industry: Asphaltic Concrete Manufacturing	Negligible emissions	IPFPE source typically uncontrolled	FUGITIVE EMISSIONS CAPTURE AND CONTROL METHODS															
				Preventative procedures and operating changes								Capture methods				Removal equipment		
			Control technologies identified in Section 2.1	Wet suppression (water and/or chemical)	Confinement by enclosure	Better control of raw material quality	Better control of operating parameters and procedures	Improved maintenance and/or construction program	Increase exhaust rate of primary control system	Wind shields in direction of prevailing wind	Fixed hoods, curtains, partitions, covers, etc.	Movable hoods with flexible ducts	Closed buildings with evacuation		Fabric filter	Scrubber	Cyclone
1. Storage of coarse and fine aggregate			✓														
2. Unloading coarse and fine aggregate to cold bins				o						o							
3. Cold aggregate elevator					x						o				o	o	o[a]
4. Dried aggregate elevator					x						o				o	o	o[a]
5. Screening hot aggregate					x						o				o	o	o[a]
6. Hot aggregate elevator (continuous mix plant)					x						o				o	o	o[a]

x Typical control technique.

o In use (but not typical) control technique.

+ Technically feasible control technique.

[a] Primary control often in series with fabric filter.

haul roads previously discussed in Section 2.1, are presented in Table 2-58. This section discusses the major fugitive emission sources and their related control technology.

Transfer of fine and coarse aggregate from storage to the cold bins is generally accomplished with rubber-tired front-end loaders. Control requirements for this operation vary with the moisture content of the aggregate. If the aggregate has been washed in processing for removal of excess fines and silt, or if the aggregate storage stockpiles have been wetted for dust suppression, the surface moisture content of the aggregate is often sufficient to prohibit dusting. Conversely, aggregate which is relatively surface dry can make this operation rather dusty. Control commonly consists of wet suppression (water or chemical) in the form of a sprinkling system at the cold bin and shielding the cold bin area from the prevailing wind as much as possible.

The remaining IPFPE sources, elevators for cold, dried, and hot (for continuous mix plants) aggregate and hot screening, are often completely enclosed, with aspiration of the tops of the elevators and hot screen to the control device for the aggregate dryer (a fabric filter or scrubber, often with a primary centrifugal collector). An enclosing hood-type top deck cover for the hot aggregate screen is more efficient than the flat top deck cover found most frequently at these plants. Exhaust ventilation for the aggregate elevators is generally based on 0.508 m^3 per second per m^2 area (100 cfm per square foot), while the screening exhaust requirements are 0.254 m^3 per second per m^2 area (50 scfm per square foot).[5] Typical fugitive emission flow requirements for a 136 Mg (150 tons) per hour plant are about 1.42

these are potential uncontrolled emission rates, the site-specific level of control must be considered for application to a particular plant. Also included are reliability factors for each estimate.

The largest potential uncontrolled fugitive emission point is aggregate storage. For most plants fugitive emissions from aggregate elevators are negligible, with control of these emissions by enclosure and exhaust to control equipment.

2.11.3 Example Plant Inventory

The example plant inventory for asphalt concrete production shown in Table 2-57 presents potential fugitive emission quantities from the uncontrolled sources within the process. The inventory represents a plant which produces 286,000 Mg (315,000 tons) of asphalt concrete per year, based on a plant with a capacity of 136 Mg (150 tons) per hour operating 250 days per year and 8 hours per day.

Not included in the inventory are fugitive emissions from plant haul roads. Emission factors for this source may be found in Section 2.1. Total model plant uncontrolled process fugitive particulate emissions are 68 Mg (75 tons) per year.

2.11.4 Characteristics of Fugitive Emissions

Fugitive particulate emissions from hot mix asphalt plants consist basically of dust from aggregate storage, handling, and transfer. Stone dust may range from 0.1 μm to more than 300 μm. On the average, 5 percent of cold aggregate feed is <4 μm (minus 200 mesh). Dust which may escape before reaching primary dust collection generally is 50-70 percent <4 μm (minus 200 mesh).[3]

2.11.5 Control Technology

Control technology options for the IPFPE sources, with the exception of those for aggregate storage piles and plant

Table 2-57 (continued). IDENTIFICATION AND QUANTIFICATION OF POTENTIAL FUGITIVE PARTICULATE EMISSION POINTS FOR ASPHALTIC CONCRETE PRODUCTION

Source of IPFPE	Uncontrolled fugitive emission factor	Emission factor reliability rating	Model plant fugitive emission inventory	
			Operating parameter, Mg/yr (tons/year)	Uncontrolled emissions Mg/yr (tons/yr)
2. Unloading coarse and fine aggregate to storage bins	Negligible - 0.05 kg/Mg of aggregate[b] (0.10 lb/ton)	D	Aggregate processed 272,100 (300,000)	7 (8)
3. Cold aggregate elevator	Negligible - 0.1 kg/Mg of aggregate[b,c] (0.2 lb/ton)	D	Aggregate processed 272,100 (300,000)	14[e] (15)
4. Dried aggregate elevator	c		-	c
5. Screening hot aggregate	Negligible - 0.013 kg/Mg of aggregate[d] (0.026 lb/ton)	D	Aggregate processed 272,100 (300,000)	2[e] (2)
6. Hot aggregate elevator (continuous mix plant)	c	-	-	c

[a] For complete development of this factor, refer to Section 2.1.4. For this example it was assumed that S = 1.5, D = 90, PE = 100, and K_1, K_2, and K_3 = 1. Reference 1.

[b] Reference 2.

[c] Emissions from points 4 and 6 are included in emissions from point 3.

[d] Reference 3.

[e] Emissions from these points for many plants are negligible, since these operations are generally enclosed and exhausted to the primary control system for the aggregate dryer (e.g., scrubber or fabric filter).

Table 2-57. IDENTIFICATION AND QUANTIFICATION OF POTENTIAL FUGITIVE PARTICULATE EMISSION POINTS FOR ASPHALTIC CONCRETE PRODUCTION

Source of IPFPE	Uncontrolled fugitive emission factor	Emission factor reliability rating	Model plant fugitive emission inventory	
			Operating parameter, Mg/yr (tons/year)	Uncontrolled emissions Mg/yr (tons/yr)
1. Storage of coarse and fine aggregate				
Loading onto pile	$\frac{(0.02)\ (K_1)\ (S/1.5)}{(PE/100)^2}$ kg/Mg material loaded onto pile[a] $\left(\frac{(0.04)\ (K_1)\ (S/1.5)}{(PE/100)^2}\ \text{lb/ton}\right)$	D	Aggregate loaded 277,100 (300,000)	5 (6)
Vehicular traffic	$\frac{(0.065)\ (K_2)\ (S/1.5)}{(PE/100)^2}$ kg/Mg material stored[a] $\left(\frac{(0.13)\ (K_2)\ (S/1.5)}{(PE/100)^2}\ \text{lb/ton}\right)$	D	Aggregate stored 272,100 (300,000)	18 (20)
Loading out	$\frac{(0.025)\ (K_3)\ (S/1.5)}{(PE/100)^2}$ kg/Mg material loaded out[a] $\left(\frac{(0.05)\ (K_3)\ (S/1.5)}{(PE/100)^2}\ \text{lb/ton}\right)$	D	Aggregate loaded out 272,100 (300,000)	7 (8)
Wind erosion	$\frac{(0.055)\ (S/1.5}{(PE/100)^2}\ (\frac{D}{90})$ kg/Mg material stored[a] $\left(\frac{(0.11)\ (S/1.5)}{(PE/100)^2}\ (\frac{D}{90})\ \text{lb/ton}\right)$	D	Aggregate stored 272,100 (300,000)	15 (16)

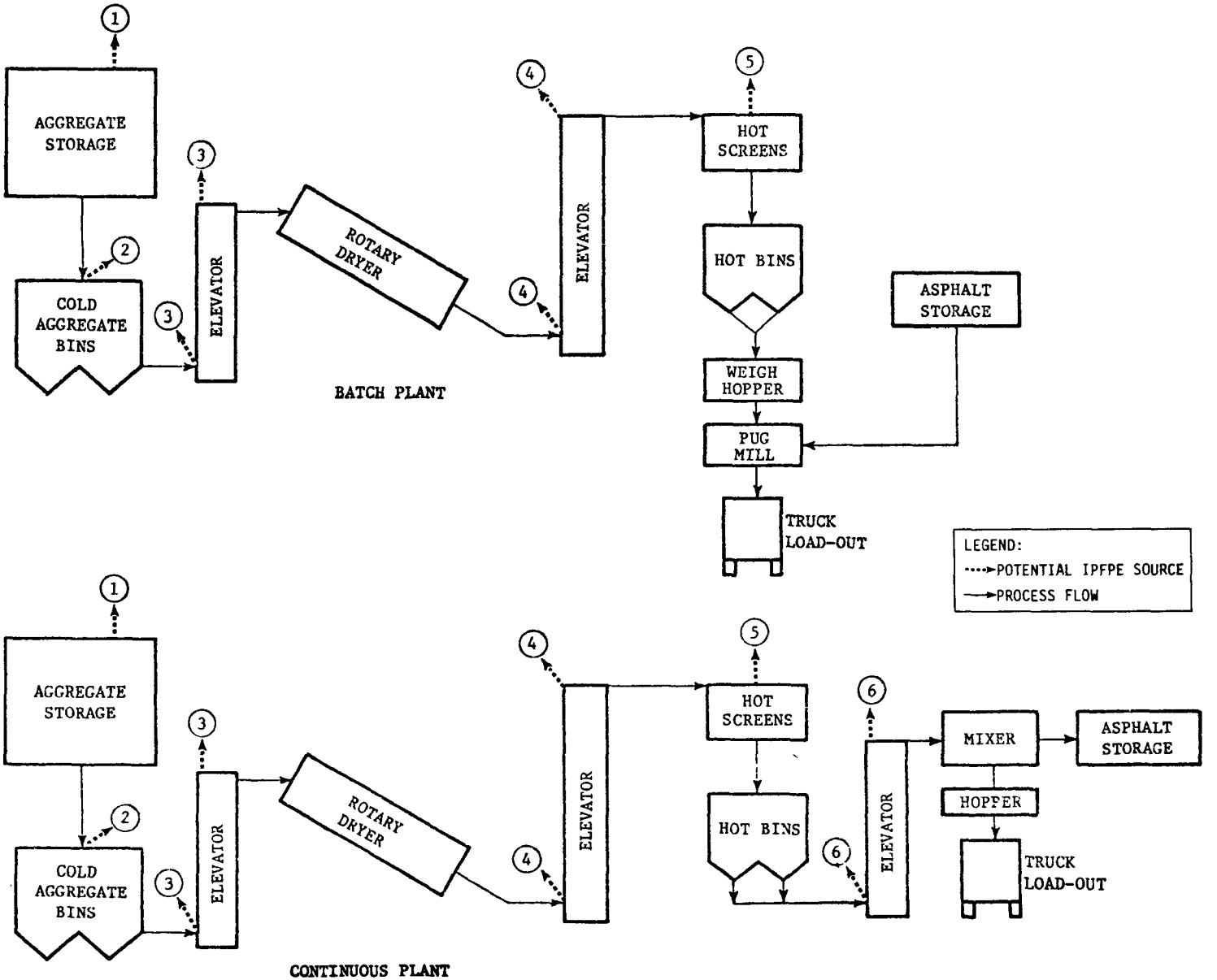

Figure 2-21. Process flow diagram for asphaltic concrete manufacturing showing potential industrial process fugitive particulate emission points.

In a batch plant, the classified aggregate drops into one of four large bins. The operator controls the aggregate mix size distribution by opening individual bins and allowing the classified aggregate to drop into a weigh hopper until the desired weight is obtained. After all the material is weighed out, the sized aggregates are dropped into a mixer and mixed dry for about 30 seconds. The asphalt, which is a solid at ambient temperatures, is pumped from heated storage tanks, weighed, and then injected into the mixer. The hot, mixed batch is then dropped into a truck and hauled to the job site.

In a continuous plant, the classified aggregate drops into a set of small bins. From these hot bins, the aggregate is transferred through a set of feeder conveyors and bucket elevator into the mixer. Asphalt is metered into the inlet end of the mixer, and retention is controlled by an adjustable dam at the discharge end of the mixer. The mix flows out of the mixer into a hopper from which the trucks are loaded.

The production capacities of asphalt plants range from 45 to 320 Mg/hr (50 to 350 TPH); the average capacity being 148 Mg/hr (163 TPH). The asphalt is usually about 5 to 6 percent by weight of the total mix.

A process flow diagram for asphaltic concrete production is shown in Figure 2-21. Each potential process fugitive emission point is identified and explained in Table 2-57. A dust source common to all asphaltic concrete producing facilities, but not specifically included in the Figure or Table is plant roads. Proper evaluation of this emission category is explained in Section 2.1.

2.11.2 IPFPE Emission Rates

Table 2-57 presents a summary of uncontrolled emission factors for an asphalt concrete plant IPFPE sources. Since

2.11 ASPHALTIC CONCRETE PRODUCTION

2.11.1 Process Description

The production of hot-mix asphalt paving involves proportioning of coarse and fine cold aggregates, heating and drying of aggregates, and uniform mixing and coating with hot asphalt to produce a specific paving mix. After the mixing, the hot paving mixture is discharged into trucks which transport the mix to the paving site.

With regard to the final mixing process, plants are either of the batch or continuous-mix type. Both types of plants have the same pattern of material flow up to the point of measuring the aggregate from the hot bins into the mixture. Asphalt plants may be stationary or portable; portable plants are designed to be readily dismantled and transported on trailers from one job site to another.

Different applications of asphaltic concrete require different aggregate size distributions. The coarse aggregate usually consists of crushed stone and gravel, but waste materials such as slag from steel mills or crushed glass can be used as raw material also. The raw aggregates are crushed and screened at the quarries, and then brought to the plant site and stored in open piles.

The aggregate is hauled from the storage piles and placed in the appropriate hoppers of the cold-feed unit. The material is metered from the hoppers onto a conveyor belt and is transported into a direct-fired, gas or oil, rotary dryer, which operates at 135°-165°C (275°-325°F). The hot aggregate from the dryer drops into a bucket elevator and is transferred to a set of vibrating screens which classify the aggregates according to size into as many as four different grades.

REFERENCES FOR SECTION 2.10

1. Hash, R.T. Control of Atmospheric Emissions from Concrete Batch Plants, In: Proceedings of the Second Annual Industrial Air Pollution Control Conference, Department of Civil Engineering, University of Tennessee, 1972. pp. 241-248.

2. Compilation of Air Pollutant Emission Factors. Second Edition. U.S. Environmental Protection Agency, Office of Air and Water Management, Office of Air Quality Planning and Standards. Publication No. AP-42. Research Triangle Park, North Carolina. February, 1976.

3. Open Dust Sources Around Iron and Steel Plants, Draft. Midwest Research Institute. Prepared for U.S. Environmental Protection Agency, Industrial Environmental Research Laboratory. Contract No. 68-02-2120. Research Triangle Park, North Carolina. November 2, 1976.

4. Engineering Judgement Based on Observations and Emission Tests on Controlled Similar Sources.

5. Personal Communication to John M. Zoller from T.R. Blackwood of Monsanto Research Corporation. Dayton Laboratory. 1515 Nicholas Road, Dayton, Ohio. October 18, 1976.

the operation and because the truck must also have freedom of movement, this is a difficult operation to hood. The truck bed is usually divided into several compartments and the batch is dropped into each compartment. This necessitates moving the truck after each drop in one compartment so another compartment of the truck can be moved into place. A canopy type hood just large enough to cover one compartment at a time provides effective dust pickup and affords adequate visibility. The sides can be made of heavy rubber to give the hood some flexibility so that it will not be damaged if a truck hits it. The hood is sometimes mounted on rails to permit it to be withdrawn and allow wet batching into transit mix trucks. The exhaust volume varies with the shape of the hood and is usually in the neighborhood of 2.83 to 3.30 m^3 per second (6000 to 7000 cfm).

A conscientious housekeeping program which includes such measures as prompt clean-up of spills, maintenance of conveyor equipment to prevent leaks and proper handling and disposal of the material collected by fabric filters, is necessary to complete the overall effective control of fugitive emissions at cement batching plants.

Fugitive emissions from air displaced as dry materials are discharged from the weigh hopper into the mixer at a central mix plant can be considerable. Effective control can be accomplished by a mobile hood placed over the outlet of the discharge end of the mixer. This hydraulically operated hood is swung away from the discharge end when the mixer is dumped. For a hood of this type the indraft face velocity should be approximately 5-8 m/sec (1000-1500 ft/min) in order to overcome the velocities that are created when the dry aggregate and cement fall into the mixer.

Fugitive emissions generated when the weighed amount of sand, aggregate, and cement is dumped from the weigh hoppers into the receiving hopper of the transit mix truck can be controlled by several different methods: (1) employment of a telescopic shroud which encompasses the rear of the mixer which can be controlled mechanically or by air cylinders. The flexible shroud is lowered over the rear of the truck when the truck is in place; (2) stationary type of hood where the trucks have to back into it. This is a good design but the fact that the trucks have to back into it may be a disadvantage; (3) hood made of sheet metal which totally encloses the transit mix truck receiving hopper when in place. After the truck is filled, the panels are raised. The side panels of the hood are actuated by air cylinders. Most plants that do dry batching also do wet batching, therefore, the weigh hoppers must be set high enough to accomodate the transit mix trucks used in wet batching. Since the receiving hopper of most transit mix trucks is several feet higher than the top of flat bed trucks used to haul the material in dry batching, there are considerable fugitive emissions from the fall of material when a dry batch is discharged. Because the plant operator must view

pneumatic delivery system a volume of conveying air required is about 0.165 to 0.330 m^3 per second (350 cfm to 700 cfm) depending on the loading cycle, etc. Since the air is being forced into the silo the baghouse will require a blower in order to relieve the pressure inside the silo, and allow flow through the fabric filter. A vent rate in the neighborhood of 0.566 to 0.613 m^3 per second (1200 to 1300 cfm) is generally required. The negative pressure created also prevents cement dust leakage around access doors, and other openings which would not be the case if the cement silo was under a positive pressure during filling.

The cement receiving storage system for a bucket elevator is at or below ground level. The hopper is designed to fit a canvas discharge tube from the hopper of the truck or railcar, which practically eliminates cement emissions. The bucket elevator is usually completely enclosed. As with pneumatic conveying, the cement silo vent emissions caused by the air displaced in the silo during loading must be controlled. Control can be accomplished by venting to a central dust collecting system or a single collector placed on top of each silo. A fabric type of collector is most often used to vent the cement silo as well as other dust collecting points in concrete batching plants. The single type of filter that is placed on each silo can be operated without an exhauster when the material is delivered to the silo by bucket elevators because it is simply used to filter the air that is forced out.

The emissions generated from the rapid discharge of sand, aggregate, and cement into the weigh hopper may be controlled by venting the displaced air to the individual storage bins and silo or by venting it directly to a central collecting system.

Table 2-56. CONTROL TECHNIQUES FOR CONCRETE BATCHING IPFPE SOURCES

Industry: Concrete Batching	Negligible emissions	IPFPE source typically uncontrolled	Control technologies identified in Section 2.1	FUGITIVE EMISSIONS CAPTURE AND CONTROL METHODS													
				Preventative procedures and operating changes							Capture methods				Removal equipment		
				Wet suppression (water and/or chemical)	Confinement by enclosure	Better control of raw material quality	Better control of operating parameters and procedures	Improved maintenance and/or construction program	Increase exhaust rate of primary control system		Fixed hoods, curtains, partitions, covers, etc.	Movable hoods with flexible ducts	Closed buildings with evacuation		Fabric filter	Scrubber	Fabric "sock"
1. Sand and aggregate storage			✓														
2. Transfer of sand and aggregate to elevated bins			✓														
3. Cement transfer to elevated storage silos[b] and silo vents					x[a]										o		o
4. Weigh hopper loading of cement, sand, and aggregate											o				o	o	
5. Mixer loading of cement, sand, and aggregate (central mix plant)												o			o	o	
6. Loading of transit mix (wet batching) truck					x						o	o			o	o	
7. Loading of flat-bed (dry batch) truck					x						o	o			o	o	

x Typical control technique.

o In use (but not typical) control technique.

+ Technically feasible control technique.

[a] For bucket elevators.

2.10.4 Characteristics of Fugitive Emissions

In a wet concrete batching plant, practically all the dust generated is cement dust since most of the sand and aggregate used is damp. Particle size characteristics of the dust vary according to the grade of cement. A range of 10 to 20 percent by weight <5 μm is typical for the various grades of cement. The dust generated from dry concrete batching plants has characteristics similar to those of the cement dust discussed for wet concrete batching plants.

2.10.5 Control Technology

Control technology options, with the exception of unpaved roads and storage of sand and aggregate discussed in Section 2.1, are presented in Table 2-56. This section discusses the major fugitive emission sources and their related control technology.

The amount of fugitive emissions generated during transfer of sand and aggregate from storage to elevated storage bins depends primarily on the surface moisture content of these materials. Water sprays applied at the feed, transfer, and discharge points of the belt conveyor or bucket elevator system will ensure that the material is sufficiently moist to prevent dusting. In addition, most plants partially or completely enclose the conveyor system to prevent windage losses. Transfer points may also be exhausted to fabric filters for control. Section 2.1.1 discusses transfer and conveying sources in detail.

Pneumatic transfer of cement to elevated storage silos from trucks and rail cars equipped with compressors are finding increased application over cement transfer by bucket elevator. Pneumatic transfer eliminates emissions between the truck or railcar and the cement silo and requires control only at the cement silo vent by fabric filter. In the

specifically included in this section is plant roads. Discussion of this fugitive dust source is presented in Section 2.1.

2.10.2 IPFPE Emission Rates

Table 2-55 presents a summary of uncontrolled emission factors for concrete batching plant IPFPE sources. Since these are potential uncontrolled emission rates, the site-specific level of control must be considered for application to a specific plant. Also included are reliability factors for each estimate.

The largest potential source of uncontrolled fugitive emissions at concrete batching plants is cement unloading to elevated storage silos.

2.10.3 Example Plant Inventory

The example plant inventory for concrete batching shown in Table 2-55 presents potential fugitive emission quantities from the various uncontrolled sources within the process. The inventory represents a wet-batch plant which produces approximately 30,000 m^3 (40,000 yd^3) of concrete per year. The plant inventory is not meant to display a typical plant, but merely a model plant with an arbitrarily chosen production rate.

Raw material constituents were based on the following proportions:

sand and aggregate:	85% by weight
cement:	10-15% by weight
water:	5% by weight
density of concrete:	2.4 Mg/m^3 (4,000 lb/yd^3)

Not included in the inventory are fugitive emissions from plant haul roads. Emission factors for these sources are listed in Section 2.1. Total model plant uncontrolled process fugitive particulate emissions are 5.4 Mg (5.8 tons) per year.

Table 2-55 (continued). IDENTIFICATION AND QUANTIFICATION OF POTENTIAL FUGITIVE PARTICULATE EMISSION POINTS FOR CONCRETE BATCHING

Source of IPFPE	Uncontrolled fugitive emission factor	Emission factor reliability rating	Model plant fugitive emission inventory	
			Operating parameter, Mg/yr (tons/year)	Uncontrolled emissions Mg/yr (tons/yr)
2. Transfer of sand and aggregate to elevated bins	0.02 kg/Mg of sand and aggregate transferred[c] (0.04 lb/ton of sand and aggregate transferred)	E	Sand and aggregate transferred 60,000 (66,000)	1.2 (1.3)
3. Cement unloading to elevated storage silos	0.118 kg/Mg of cement unloaded[d] (0.236 lb/ton of cement unloaded)	D	Cement transferred to storage silo 7,000 (7,700)	0.8 (0.9)
4. Weigh hopper loading of cement, sand, and aggregate	0.01 kg/Mg of cement, sand and aggregate[c] (0.02 lb/ton of cement, sand and aggregate)	E	Cement, sand, and aggregate loaded 67,000 (73,700)	0.7 (0.8)
5. Mixer loading of cement, sand and aggregate (central mix plant)	0.02 kg/Mg of cement, sand and aggregate[c] (0.04 lb/ton of cement, sand and aggregate)	E	-	-
6. Loading of transit mix (wet-batching) truck	0.01 kg/Mg of cement, sand and aggregate[c] (0.02 lb/ton of cement, sand and aggregate)	E	Cement, sand, and aggregate loaded 67,000 (73,700)	0.7 (0.8)
7. Loading of dry-batch truck	0.02 kg/Mg of sand and aggregate[c] (0.04 lb/ton of sand and aggregate)	E	-	-

[a] AP-42 (Reference 2) reports total plant uncontrolled emission factor of 0.05 kg/Mg (0.1 lb/ton) of concrete produced.

[b] For complete development of this factor, refer to Section 2.1.4. For their example is was assumed that S = 1.5, D = 90, PE = 100, and K_1, K_2, and K_3 = 1. Reference 3.

[c] Reference 4.

[d] Reference 5. From testing of mechanical unloading to hopper and subsequent transport of cement by enclosed bucket elevator to elevated bins with a fabric sock over the bin vent.

Table 2-55. IDENTIFICATION AND QUANTIFICATION OF POTENTIAL FUGITIVE PARTICULATE EMISSION POINTS FOR CONCRETE BATCHING

Source of IPFPE	Uncontrolled fugitive emission factor	Emission factor reliability rating	Model plant fugitive emission inventory	
			Operating parameter, Mg/yr (tons/year)	Uncontrolled emissions Mg/yr (tons/yr)
1. Sand aggregate storage				
Loading onto pile	$\frac{(0.02)\ (K_1)\ (S/1.5)}{(PE/100)^2}$ kg/Mg material loaded onto pile[b]	D	Sand and aggregate loaded 20,000 (22,000)	negligible
	$\left(\frac{(0.04)\ (K_1)\ (S/1.5)}{(PE/100)^2}\right.$ lb/ton material loaded onto pile$\left.\right)$			
Vehicular traffic	$\frac{(0.065)\ (K_2)\ (S/1.5)}{(PE/100)^2}$ kg/Mg material stored[b]	D	Sand and aggregate stored 20,000 (22,000)	1 (1)
	$\left(\frac{(0.13)\ (K_2)\ (S/1.5)}{(PE/100)^2}\right.$ lb/ton material stored$\left.\right)$			
Loading out	$\frac{(0.025)\ (K_3)\ (S/1.5)}{(PE/100)^2}$ kg/Mg material loaded out[b]	D	Sand and aggreate loaded out 20,000 (22,000)	negligible
	$\left(\frac{(0.05)\ (K_3)\ (S/1.5)}{(PE/100)^2}\right.$ lb/ton material loaded out$\left.\right)$			
Wind erosion	$\frac{(0.055)\ (S/1.5)}{(PE/100)^2}\ (\frac{D}{90})$ kg/Mg material stored[b]	D	Sand and aggregate stored 20,000 (22,000)	1 (1)
	$\left(\frac{(0.11)\ (S/1.5)}{(PE/100)^2}\ (\frac{D}{90})\right.$ lb ton material stored$\left.\right)$			

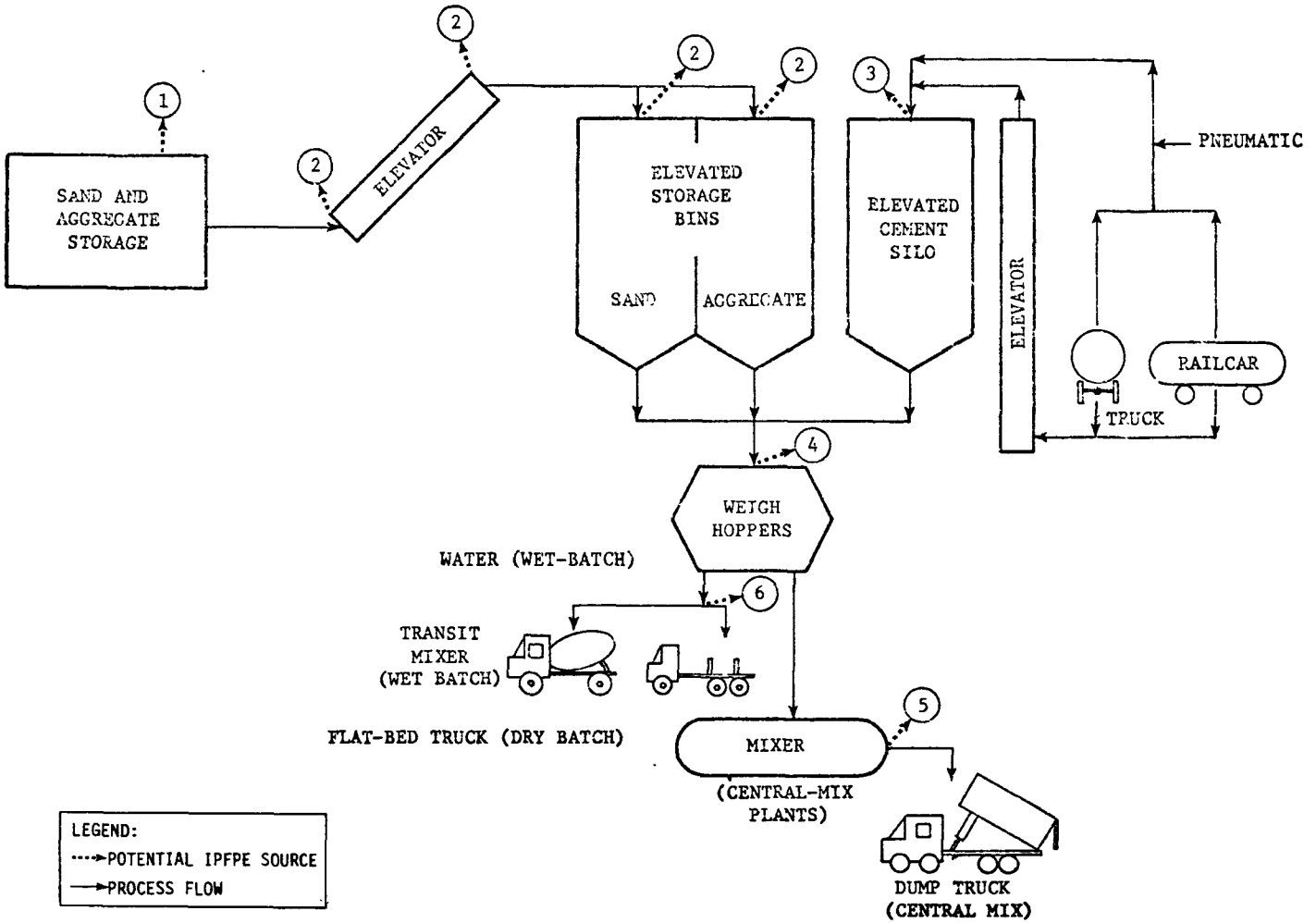

Figure 2-20. Process flow diagram for concrete batching showing potential industrial process fugitive particulate emission points.

2.10 CONCRETE BATCHING

2.10.1 Process Description

Concrete batching plants store, convey, measure, and discharge the constituents for making concrete to transportation equipment. Plants are of three basic types: wet batching, dry batching, and central mix plants. The plants are similar in the method by which the solid raw materials (sand, aggregate, and cement) are received, stored, transferred and blended, but differ with respect to where the water is added to the mix.

The raw materials are delivered to the plant by rail or truck. The cement is transferred pneumatically (most common) or by bucket elevator to elevated storage silos, while the sand and aggregate are generally stored on the ground and transferred to elevated bins via belt conveyor or bucket elevator in preparation for mixing. From the overhead bins, they go to weigh hoppers which weigh out the proper amount of each material. The wet batching plant mixes sand, aggregate, cement and water in the proper proportions (from the weigh hopper), and dumps the mixture into transit mix trucks which mix the batch en route to the site where the concrete is to be poured. Dry batching plants mix the sand, aggregate and cement and then dump this dry mix into flat bed trucks which transport the batch to paving machines at the job site where water is added and mixing takes place. A central mix plant uses a central mixer to make the wet concrete for transfer by open bed dump trucks to the job site.

A process flow diagram for concrete batching is shown in Figure 2-20. Each potential fugitive emission point is identified and quantified by emission factors in Table 2-55. A dust source common to all concrete batch plants, but not

8. Shannon, L.J., P.G. Gorman, and M. Reichel. Particulate Pollutant System Study, Volume II - Fine Particulate Emissions. Midwest Research Institute. Prepared for U.S. Environmental Protection Agency, Air Pollution Control Office. Contract No. 22-69-104. Chapel Hill, North Carolina. August 1, 1971.

9. Chalekode, P.K. and T.R. Blackwood. Source Assessment Document No. 40, Crushed Limestone, Preliminary Draft Not for Distribution. Monstanto Research Corporation. Contract No. 68-02-1874. Dayton Ohio. February 1976.

10. Minnick, J.C. Control of Particulate Emissions from Lime Plants - A Survey. J. Air Pollution Control Association, 21(4): 195-200, 1971.

11. Plant visit to Black River Mining Co. Mr. Allan Cigallio and Jack Gividen.

12. Krohn, David J. U.S. Lime Division's Dust Abatement Efforts Whip Pollution Problem. Pit and Quarry. Vol. 66: 87-92. May 1974.

REFERENCES FOR SECTION 2.9

1. Evaluation of Fugitive Dust from Mining, Task 1 Report. PEDCo-Environmental Specialists, Inc., Cincinnati, Ohio. Prepared for Industrial Environmental Research Laboratory/REDH, U.S. Environmental Protection Agency, Cincinnati, Ohio. Contract No. 68-02-1321, Task No. 36, June 1976.

2. Compilation of Air Pollutant Emission Factors. Second Edition. U.S. Environmental Protection Agency, Office of Air and Water Management, Office of Air Quality Planning and Standards. Publication No. AP-42. Research Triangle Park, North Carolina February 1976.

3. Fugitive Dust from Mining Operations--Appendix Final Report, Task No. 10. Monsanto Research Corporation, Dayton, Ohio. Prepared for U.S. Environmental Protection Agency, Research Triangle Park, North Carolina. May 1975.

4. Open Dust Sources Around Iron and Steel Plants, Draft. Midwest Research Institute. Prepared for U.S. Environmental Protection Agency, Industrial Environmental Research Laboratory. Contract No. 68-02-2120. Research Triangle Park, North Carolina. November 2, 1976.

5. Personal Communication to John M. Zoller, PEDCo Environmental, Inc. from T.R. Blackwood of Monsanto Research Corporation. Dayton Laboratory. 1515 Nicholas Road, Dayton, Ohio. October 18, 1976.

6. A Study of Fugitive Emissions from Metallurgical Processes. Midwest Research Institute. Contract No. 68-02-2120. Monthly Progress Report No. 8. Kansas City, Missouri. March 8, 1976.

7. Particulate Pollutant System Study. Volume III- Handbook of Emission Properties. Midwest Research Institute. Contract No. CPA 22-69-104. Kansas City, Missouri. May 1, 1971.

materials. Control of waste disposal area emissions has been discussed in Section 2.1.

Miscellaneous IPFPE sources such as spillage from overloaded trucks, leaky bins, and accumulation of lime on the ground under conveyor transfer points are intermittent problems which can be cumulatively significant if not properly attended. In general, the control of these sources is best accomplished by the use of careful housekeeping and maintenance procedures (consisting of maintaining the equipment and enclosure to prevent leaks, maintaining fabric filters conscientiously with quick replacement of broken bags, and quick clean-up of spills), supported by a conscientious surveillance and education program.

many of them enclose and exhaust transfer points as well. Section 2.1 provides a more detailed discussion of control technology for transfer and conveying operations.

Emissions which escape from the hoods designed to capture point source emissions from quicklime and hydrated lime grinding mills and screens, and their associated air separators and elevators, can best be controlled by improving the capture efficiency of the hoods. This can be accomplished by increasing the blower head and vent rate of the primary control system and by redesigning the hooding. The removal equipment normally associated with such a system include fabric filters or wet cyclonic devices, often with cyclone pre-cleaners.

Lime storage silo ventilation air and pneumatic transport system air are usually controlled by fabric "socks" (lime silo vent) and fabric filters.

Lime packaging and bulk truck, rail, and ship/barge loading operations are also frequently controlled by aspiration through fabric filters. Gravity-feed fill spout mechanisms with outer concentric aspiration ducts to fabric filters provide nearly dust-free operation at these loading sources, and are finding widespread employment at lime facilities.

Most of the material collected by fabric filters at a lime plant is returned in a closed loop to its related process operation; however, when this collected material cannot be returned (e.g., kiln flue dust), disposing of it to lime by-product storage or waste areas by discharge and transport in open trucks, can be an intermittent yet severe problem. Wet suppression and enclosure of the unloading operation and covering of the truck can be used to reduce these emissions. Pug mills are sometimes used to thoroughly moisten waste

Table 2-54. CONTROL TECHNIQUES FOR LIME MANUFACTURING IPFPE SOURCES

Industry: Lime Manufacturing	Negligible emissions	IPFPE source typically uncontrolled	FUGITIVE EMISSIONS CAPTURE AND CONTROL METHODS														
				Preventative procedures and operating changes							Capture methods				Removal equipment		
			Control technologies identified in Section 2.1	Wet suppression (water and/or chemical)	Confinement by enclosure- partial or complete	Better control of raw material quality	Better control of operating parameters and procedures	Improved maintenance and/or construction program	Increase exhaust rate of primary control system	Choked feed	Fixed hoods, curtains, partitions, covers, etc.	Movable hoods with flexible ducts	Closed buildings with evacuation	Filling spout with outer concentric aspiration duct	Fabric filter	Cyclone	Fabric "Sock"
1. Limestone/dolomite charging to primary crusher				o	x												
2. Primary crushing				o	x						o				o	o[c]	
3. Transfer points and associated conveying			✓														
4. Primary screening				o	x						o				o		
5. Secondary crushing				o	x						o				o	o[c]	
6. Secondary screening				o	x						o				o		
7. Crushed limestone storage			✓														
8. Quicklime screening[a]				o	x						o				o		
9. Quicklime/hydrated lime crushing and pulverizing with leaks from mill and from feed discharge exhaust systems[b]							o	o									
10. Lime product silo vents															o		o
11. Truck, rail, ship/barge loading of quicklime and hydrated lime					x					x	o	o		o			
12. Packaging quicklime and hydrate lime					x					x	o	o		o	o		o

x Typical control technique.

o In use (but not typical) control technique.

+ Technically feasible control technique.

[a] Wet suppression limited due to potential impairment of material quality.

[b] Control of feed/discharge ends of grinding mills (typically hooded and exhausted to fabric filters) considered point source control. Fugitive emission are leaks from pick-up points from these systems.

[c] Primary control often in series with fabric filter.

Operation	Particle size distribution
Hammer Mill (crusher)	30% < 3 μm, 47% < 5 μm, 60% < 10 μm 74% < 20 μm, 86% < 40 μm
Screening	46% < 3 μm, 72% < 5 μm, 85% < 10 μm 95.5% < 20 μm, 98.8% < 40 μm
Bagging house	71% < 5 μm, 87.3% < 10 μm 96% < 20 μm, 98.8% < 40 μm

In addition, emissions from crushed limestone contain 1-2 percent by weight free silica.[9]

2.9.5 Control Technology

Control technology options for the lime IPFPE sources, with the exception of unpaved roads, waste areas, and limestone storage which are discussed in Section 2.1, are presented in Table 2-54. This section discusses the major fugitive emission sources and their related control technology.

Processing of the limestone and dolomite from the quarry, involving crushing, screening, and transfer operations is controlled by wet suppression and/or hooding and exhaust to removal equipment. Nearly all plants employ water sprays as an important adjunct of the control system, or as the sole control used. Primary crushers are controlled more often by wet suppression than fabric filters.[10,11,12] Hooding and exhaust ventilation to fabric filters are more commonly used for dust control at bins, secondary crushing inlets and outlets, screens, and material transfer points.

Transfer and conveying of both the finished quicklime and slaked lime products can be a considerable fugitive emission problem if these sources are not adequately enclosed and exhausted. Nearly all plants completely enclose the conveyor systems, which are most often belt-type, and

industry, in terms of individual plant production (amount of limestone processed and subsequent disposition in the form of aggregate construction material, quicklime, and a variety of hydrated lime products), the plant inventory is not meant to display a typical plant, but merely a model plant with arbitrarily selected individual process operation throughputs.

By-product lime from quicklime screening (fines) and the lime hydration air separator are further processed or stored for local markets (e.g. local farmers for agricultural use). Fugitive emissions collected from fabric filters and other removal equipment are most often returned to process streams; those which cannot be returned to process streams are hauled to lime storage or waste piles.

Not included in the inventory are fugitive emissions from plant haul roads, waste areas, and quarrying operations. Emission factors for these sources are presented in Sections 2.1 and 2.6. Total model plant uncontrolled process fugitive particulate emissions are 129 Mg (141 tons) per year.

2.9.4 Characteristics of Fugitive Emissions

Fugitive particulate emissions from lime production consist basically of limestone dust from operation prior to calcination and lime dust from operation following calcination. Fugitive particulate emission from limestone storage, handling, and transfer typically has a mean particulate diameter of 3-6 μm, 45-70 percent of which are less than 5 μm.[6]

Little other information concerning fugitive particulate emission characteristics from lime production is available. The following information pertaining to stack emissions characteristics is presented since they most likely closely parallel those of fugitive emissions.[7,8]

Table 2-53 (continued). IDENTIFICATION AND QUANTIFICATION OF POTENTIAL FUGITIVE PARTICULATE EMISSION POINTS FOR LIME PRODUCTION

Source of IPFPE	Uncontrolled fugitive emission factor	Emission factor reliability rating	Model plant fugitive emission inventory	
			Operating parameter Mg/yr. (tons/year)	Uncontrolled emissions Mg/yr. (tons/yr)
9. Quicklime and hydrated lime crushing and pulverizing with leaks from mill and from feed/discharge exhaust systems.	0.05 kg/Mg of quicklime and hydrated lime produced[h] (0.1 lb/ton)	E	Quicklime and hydrated lime crushed and pulverized 50,000 (55,000)	2 (3)
10. Lime product silo vents	i			i
11. Truck, rail, ship/barge loading of quicklime and hydrated lime	0.118 kg/Mg of lime products loaded[j] (0.236 lb/ton	E	Lime products loaded 50,000 (55,000)	6 (6)
12. Packaging quicklime and hydrated lime	Negligible - 0.005 kg/Mg of lime products packaged[k] (0.01 lb/ton)	E	Lime products packaged 10,000 (11,000)	Negligible

[a] Reference 1.

[b] Reference 2 - AP-42. 80% and 60% of which falls out on plant property for points 2 and 5, respectively.

[c] Engineering judgment, assumed approximately same as emission factor for dry phosphate rock as reported in Reference 3.

[d] Emission from primary screening (point 4) included in emission factor for primary crushing (point 2).

[e] Emissions from secondary screening (point 6) included in emission factor for secondary crushing (point 5).

[f] For complete development of this factor, refer to Section 2.1.4. For this example, it was assumed that S = 1.5, D = 90, PE = 100, and K_1, K_2, and K_3 = 1. Reference 4.

[g] Emission from quicklime screening (point 8) included in emission factor for quicklime crushing and pulverizing (point 9).

[h] Engineering judgment based on controlled cement milling emissions reported by a cement manufacturing company.

[i] Emissions from lime product silo vents (point 10) included in emission factor for lime loading (point 11).

[j] Engineering judgment, assumed same as for loading of hydraulic cement obtained from Reference 5.

[k] Engineering judgment based on observations and emission tests of controlled similar sources.

Table 2-53 (continued). IDENTIFICATION AND QUANTIFICATION OF POTENTIAL FUGITIVE PARTICULATE EMISSION POINTS FOR LIME PRODUCTION

Source of IPFPE	Uncontrolled fugitive emission factor	Emission factor reliability rating	Model plant fugitive emission inventory: Operating parameter, Mg/yr (tons/year)	Model plant fugitive emission inventory: Uncontrolled emissions Mg/yr (tons/yr)
7. Crushed limestone storage				
Loading onto pile	$\frac{(0.02)\ (K_1)\ (S/1.5)}{(PE/100)^2}$ kg/Mg material loaded onto pile[f] $\left(\frac{(0.04)\ (K_1)\ (S/1.5)}{(PE/100)^2}\ \text{lb/ton}\right)$	D	Crushed limestone loaded 40,000 (44,000)	1 (1)
Vehicular traffic	$\frac{(0.065)\ (K_2)\ (S/1.5)}{(PE/100)^2}$ kg/Mg material stored[f] $\left(\frac{(0.13)\ (K_2)\ (S/1.5)}{(PE/100)^2}\ \text{lb/ton}\right)$	D	Crushed limestone stored 40,000 (44,000)	3 (3)
Loading out	$\frac{(0.025)\ (K_3)\ (S/1.5)}{(PE/100)^2}$ kg/Mg material loaded out[f] $\left(\frac{(0.055)\ (K_3)\ (S/1.5)}{(PE/100)^2}\ \text{lb/ton}\right)$	D	Crushed limestone loaded out 40,000 (44,000)	1 (1)
Wind erosion	$\frac{(0.055)\ (S/1.5)}{(PE/100)^2}\ (\frac{D}{90})$ kg/Mg material stored[f] $\left(\frac{(0.11)\ S/1.5)}{(PE/100)^2}\ (\frac{D}{90})\ \text{lb/ton}\right)$	D	Crushed limestone stored 40,000 (44,000)	2 (2)
8. Quicklime screening	g			g

Table 2-53. IDENTIFICATION AND QUANTIFICATION OF POTENTIAL FUGITIVE PARTICULATE EMISSION POINTS FOR LIME PRODUCTION

Source of IPFPE	Uncontrolled fugitive emission factor	Emission factor reliability rating	Model plant fugitive emission inventory	
			Operating parameter Mg/yr (tons/year)	Uncontrolled emissions Mg/yr (tons/yr)
1. Limestone/dolomite charging to primary crusher	0.00015-0.02 kg/Mg of rock charged[a] (0.00030-0.04 lb/ton)	D	Limestone/dolomite processed 100,000 (110,000)	1 (1)
2. Primary crushing	0.25 kg/Mg of limestone crushed[b] (0.5 lb/ton)	C	Limestone/dolomite processed 100,000 (110,000)	25 (28)
3. Transfer points and associated conveying	0.4 kg/Mg of quicklime produced[c] (0.8 lb/ton)	E	Quicklime produced 50,000 (55,000)	20 (22)
4. Primary screening	d			d
5. Secondary crushing	0.75 kg/Mg of limestone crushed[b] (1.5 lb/ton)	C	Limestone/dolomite processed 90,000 (99,000)	68 (74)
6. Secondary screening	e			e

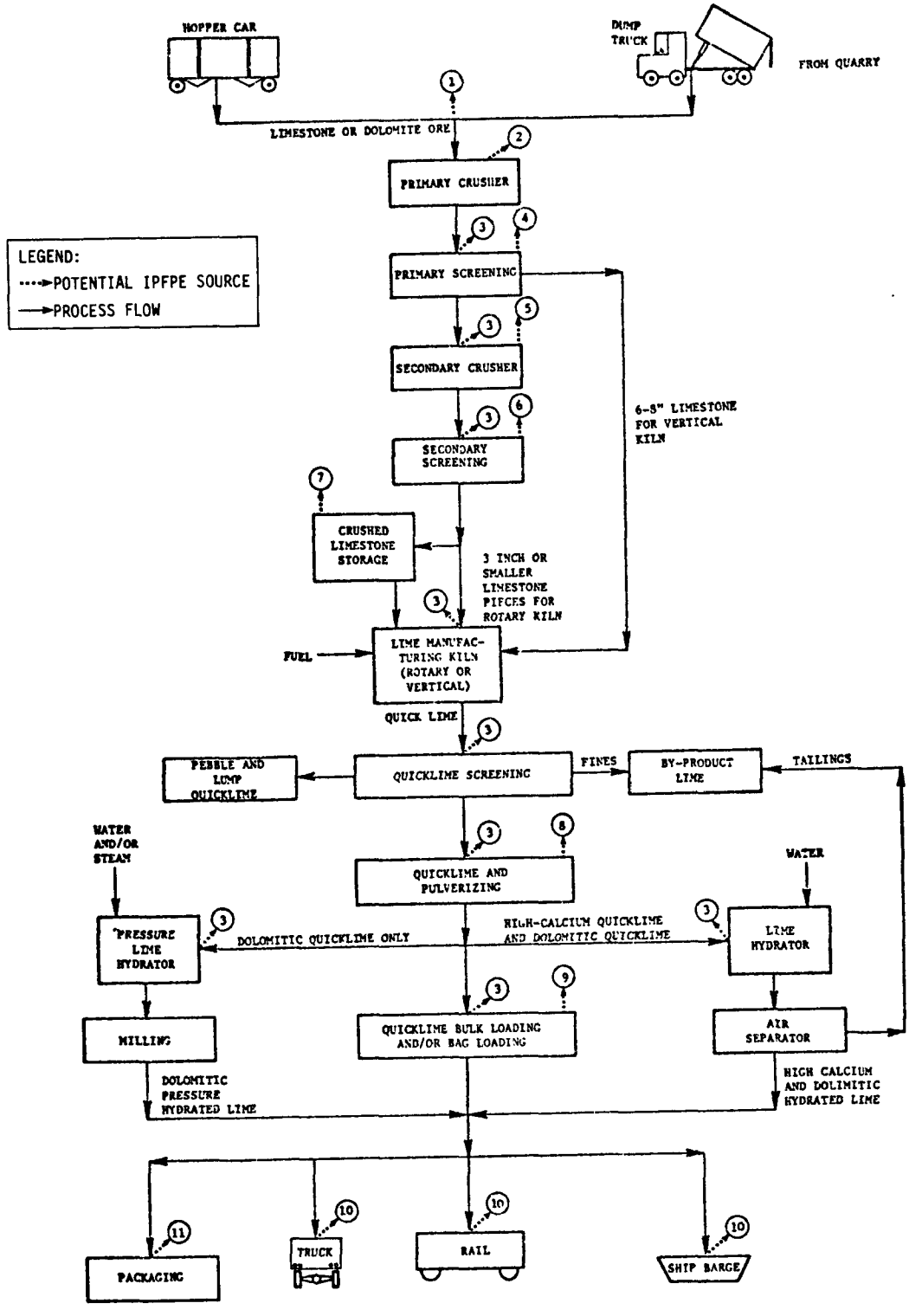

Figure 2-19. Process flow diagram for lime manufacturing showing potential industrial process fugitive particulate emission points.

rator in preparation for final shipment. Dolomitic pressure hydrated lime involves an additional milling step prior to shipment.

Shipment of the quicklime and hydrated lime products is accomplished by packaging in bags, and by bulk handling in truck, rail, and ship/barge.

A process flow diagram for lime manufacturing is shown in Figure 2-19. Each potential process fugitive emission point is identified and explained in Table 2-53. Dust sources common to all lime producing facilities, but not specifically included in the Figure or Table, are plant roads which are discussed in Section 2.1.

2.9.2 IPFPE Emission Rates

Table 2-53 presents a summary of uncontrolled emission factors for a lime facility IPFPE sources. Since these are potential uncontrolled emission rates, the site-specific level of control must be considered for application to a specific plant. Also included are reliability factors for each estimate, as defined previously.

The largest potential IPFPE sources are secondary crushing/screening and the combined transfer and associated conveying sources (source 3 in Figure 2-19). Uncontrolled fugitive dust emissions from unpaved roads at lime plants and associated quarries are often larger overall IPFPE sources.

2.9.3 Example Plant Inventory

The example plant inventory for lime manufacturing as shown in Table 2-53 presents potential fugitive particulate emission quantities from the various uncontrolled sources within the process. The inventory represents a plant which processes 100,000 Mg (110,000 tons) of limestone ore per year. Because of the wide variability throughout the

from the calcining zone. Air blown into the bottom of the kiln cools the lime before it is discharged. This air is heated sufficiently by the time it reaches the calcining zone to be used as secondary combustion air. The lime is discharged to cars on tracks or to conveyor belts, and either shipped or further processed by hydrating.

The rotary kiln, which is supported by rollers, is a long inclined horizontal steel cylinder lined with refractory brick. Most rotary kilns rotate at a speed of about one rpm. The limestone flows countercurrent to the heat, the pebble size limestone entering at one end and the hot air entering at the other. Rotary kilns are composed of three fairly distinct zones: the feed or drying zone, the central or preheating zone, and the calcining zone. Though kilns are usually well controlled, an imperfect hood fit around the rotating kiln at the feed end can be a source of fugitive emissions.

Regardless of kiln type, the temperature in the feed end of the kiln is kept below 540°C (1000°F) while the operating temperatures in the preheating and calcining zones are generally in the 1,090 to 1,320°C (2,000 to 2,400°F) range, with higher temperatures being found in shorter kilns.

The calcined lime (quicklime - CaO) is then screened, milled, and shipped as is and/or futher processed to produce hydrated lime. Fines from calcination can be briquetted, fed to a hydrator, or ground or pulverized for market demands.

The hydration process involves adding water to crushed or ground quicklime in a mixing chamber (hydrator). The product, called slaked lime, is dried primarily by the heat of hydration. The slaked lime is conveyed to an air sepa-

2.9 LIME MANUFACTURING

2.9.1 Process Description

The manufacture of lime involves the calcining of limestone ($CaCO_3$ or $CaCO_3 \cdot MgCO_3$) to release carbon dioxide and form quicklime (CaO or $CaO \cdot MgO$). There are three types of limestone used to produce lime. The limestone is classified as "high calcium" or "calcite" if the magnesium carbonate content is less than five percent, and "dolomitic limestone" or "dolomite" if the magnesium carbonate content is 30 to 40 percent. Magnesium limestone contains more magnesium carbonate than high calcium stone, but less than dolomite.

Most lime facilities are located at or in close proximity to a limestone quarry. Transfer of the quarried limestone to the crushing/screening site is most often accomplished by huge off-highway trucks. Section 2.6 describes in detail the processing operations at a limestone quarry.

Limestone and/or dolomite is crushed and size-classified by screening to obtain the desired feed size for the calcining kilns. In the United States, limestone is calcined in either vertical or rotary kilns. The limestone feed material size for vertical kilns is 15-20 cm (6-8 inches); consequently, only primary crushing is required. However, some vertical kilns do require 8-13 cm (3-5 inch) material feed size. Horizontal kilns require the smaller size feed provided by secondary crushing.

All vertical kilns operate similarly and have four distinct zones from top to bottom: stone storage zone, preheating zone, calcining zone, and cooling and discharge zone. The flow of stone in the kiln is countercurrent to the flow of cooling air and combustion gases. The stone is charged at the top and preheated by the hot exhaust gases

8. Information obtained during two cement plant visits arranged through C. Schneeberger of the Portland Cement Association, Washington, D.C. September-October 1976.

REFERENCES FOR SECTION 2.8

1. Evaluation of Fugitive Dust from Mining, Task 1 Report. PEDCo-Environmental Specialists, Inc., Cincinnati, Ohio. Prepared for Industrial Environmental Research Laboratory/REHD, U.S. Environmental Protection Agency, Cincinnati, Ohio. Contract No. 68-02-1321, Task No. 36, June, 1976.

2. Compilation of Air Pollutant Emission Factors, AP-42. U.S. Environmental Protection Agency, Office of Air and Waste Management, Office of Air Quality Planning and Standards. Research Triangle Park, North Carolina.

3. Open Dust Sources Around Iron and Steel Plants, Draft. Midwest Research Institute. Prepared for U.S. Environmental Protection Agency, Industrial Environmental Research Laboratory. Contract No. 68-02-2120. Research Triangle Park, North Carolina. November 2, 1976.

4. Personal communication to John M. Zoller, PEDCo Environmental, Inc., from T.R. Blackwood, Monsanto Research Corporation, Dayton Laboratory, 1515 Nicholas Road, Dayton, Ohio. October 18, 1976.

5. Personal Communication from Mr. M. M. Reid, Assistant to Technical Director, Lone Star Industries, Inc. Cement and Construction Materials Group to Mr. Don Goodwin, U.S. Environmental Protection Agency, Emission Standards and Engineering Division, Research Triangle Park, North Carolina. January 12, 1977.

6. Inspection Manual for the Enforcement of New Source Performance Standards: Portland Cement Plants. PEDCo Environmental, Inc. Prepared for U.S. Environmental Protection Agency, Division of Stationary Source Enforcement. Contract No. 68-02-1355, Task No. 4. Washington, D.C. January 1975.

7. Koehler, Wilhelm and Gerhard Funke. Dust Controls in the Cement Industry of the German Federal Republic. Proceedings of the Second International Clean Air Congress. Academic Press. New York. 1971.

is being employed at an increasing number of plants. Section 2.1 provides further discussion on the general aspects of loading and associated control systems.

Waste Disposal/Housekeeping - Most of the material collected by fabric filters at a cement plant is returned in a closed loop to its related process operation; however, when this collected material cannot be reused, disposing of it to waste storage areas by discharge and transport in open trucks, can be an intermittent yet severe problem. Wet suppression and enclosure of the unloading operation and covering of the truck can be used to reduce these emissions. Control of waste disposal area emissions has been discussed in Section 2.1.

A consciencious housekeeping program involving the routine clean-up of spills from conveyor pick-up and transfer points, accumulations of leaks from grinding mills and similar sources exposed to wind erosion is a very important part of the cement facility's overall fugitive emissions control program.

Limited data on the costs of fugitive emission control systems for a plant with a capacity of about 450,000 Mg (500,000 tons) per year are presented below.[8]

Source/Control System	Cost
Dump hopper for primary crusher/Spray system	$25,000
Feed end of kiln/Improvement of seals to prevent fugitive emissions	$30,000
Clinker ladder and duct work	$25,000
Cement silo vents/Fabric filters	$50,000

Emissions which escape from the hoods designed to capture emissions from raw grinding and cement grinding mills, and their associated air separators and elevators, are significant at some plants because of the poor capture efficiency of the primary control system. These operations can be improved by increasing the blower head and vent rate of the primary control system and by redesigning the hooding.

Leaks in the ball mills, for example from worn-out rubber seals between the nuts and bolts which fasten steel plates to the inner walls of the mills, can be another significant emission source. A conscientious maintenance program is the best means for controlling these types of emissions.[8] These grinding mills are often located in an enclosed structure, which helps to prevent the escape of these emissions.

Cement Loading/Packaging - Cement storage silo vents (for the discharge of displacement air as cement is fed to the silos) are either uncontrolled, covered by fabric "socks", or exhausted to fabric filters which are part of the pneumatic conveying systems. The control trend is toward aspiration by fabric filters.

Cement loading for bulk truck, rail, and ship/barge transport are typically gravity feed systems which are partially enclosed (for truck and rail loading) or unconfined (for ship/barge loading). Cement packaging is often located in a building or partial enclosure. Some plants exhaust the cement dust, which is emitted with the displaced air during loading and packaging, to fabric filters, while others have no control system at all. A loading or packaging aspiration system which consists of a filling spout with an outer concentric aspiration duct to a fabric filter

may be limited for clinker and gypsum due to the impairment of material quality and handling properties which may result.

One plant has experimented with foam to control clinker handling emissions; however, the resulting increase of entrained air in the cement product has severely limited employment of this control technique thus far.[8] The abrasiveness of clinker also may cause maintenance/attrition problems with pneumatic transfer and exhaust system equipment (ductwork, fans, etc.). Lowering of duct velocities is a solution, but limited since the collection system efficiency is simultaneously impaired.

Conveying and transfer of the powdery cement product accomplished by belt conveyor and/or pneumatic conveying is most often well confined and controlled for both prevention of product loss and air pollution control. Control techniques are similar to those for clinker conveying as described above. Pneumatic transport system air is typically controlled by fabric filters.

Clinker Storage - Clinker storage is one of the major potential sources of fugitive emissions at a cement plant. Most facilities have some type of structure for protecting the clinker from the weather; however, for the most part these partial enclosures are not sufficiently confining to prevent fugitive emissions from windage and loading/unloading activities. Some plants employ open ended structures with partial sidewalls for storage of clinker and other materials, such structures can become virtual wind tunnels during strong winds. The most effective control measure is complete enclosure of the storage area with ventilation to fabric filters.[7] One plant has a partially enclosed facility which employs a mobile clinker ladder exhausted to a fabric filter to practically eliminate emissions from unloading the clinker to storage.[8]

Table 2-52 (continued). CONTROL TECHNIQUES FOR PORTLAND CEMENT MANUFACTURING IPFPE SOURCES

Industry: Portland Cement Manufacturing	Negligible emissions	IPFPE source typically uncontrolled	Control technologies identified in Section 2.1	FUGITIVE EMISSIONS CAPTURE AND CONTROL METHODS												
				Preventative procedures and operating changes							Capture methods				Removal equipment		
				Wet suppression (water and/or chemical)	Confinement by enclosure	Telescopic or ladder type chutes	Better control of operating parameters and procedures	Improved maintenance and/or construction program	Increase exhaust rate of primary control system	Choked feed	Fixed hoods, curtains, partitions, covers, etc.	Movable hoods with flexible ducts	Closed buildings with evacuation	Filling spout with outer concentric aspiration duct	Fabric filter	Cyclone	Fabric "sock"
20. Cement silo vents															o		o
21. Cement loading					x					x	o	o		o	o		
22. Cement packaging					x					x	o	o		o	o		

x Typical control technique.

o In use (but not typical) control technique.

+ Technically feasible control technique.

[a] Control of feed/discharge ends of grinding mills (typically controlled by fabric filters) considered point source control. Fugitive emissions are leaks from pick-up points of these systems.

[b] Wet suppression limited due to potential impairment of material quality.

Table 2-52. CONTROL TECHNIQUES FOR PORTLAND CEMENT MANUFACTURING IPFPE SOURCES

Industry: Portland Cement Manufacturing	Negligible emissions	IPFPE source typically uncontrolled	FUGITIVE EMISSIONS CAPTURE AND CONTROL METHODS														
				Preventative procedures and operating changes							Capture methods				Removal equipment		
			Control technologies identified in Section 2.1	Wet suppression (water and/or chemical)	Confinement by enclosure - partial or complete	Telescopic or ladder type chutes	Better control of operating parameters and procedures	Improved maintenance and/or construction program	Increase exhaust rate of primary control system	Choked feed	Fixed hoods, curtains, partitions, covers, etc.	Movable hoods with flexible ducts	Closed buildings with evacuation	Filling spout with outer concentric aspiration duct	Fabric filter	Cyclone	Fabric "sock"
1. Raw material unloading (rail, barge, truck)			✓														
2. Raw material charging to primary crusher				o	x												
3. Primary crusher				o	x						o				o	o	
4. Transfer points and associated conveying			✓														
5. Vibrating screen				o	x						o				o		
6. Secondary crusher				o	x						o				o		
7. Unloading outfall to storage				x	o	o						+			+		
8. Raw material storage			✓		x								+		+		
9. Transfer to conveyor via clamshell			✓														
10. Raw grinding mill and feed/discharge exhaust systems[a]								o	o								
11. Raw blending	✓																
12. Blended material			✓		x								+		+		
13. Coal storage			✓		o								+		+		
14. Transfer of coal to grinding mill			✓														
15. Leakage from coal grinding mills	✓							o									
16. Unloading-clinker/gypsum outfall to storage				o[b]	x	o						+			+		
17. Clinker/gypsum storage					x								+		+		
18. Clinker/gypsum load-out			✓														
19. Finish grinding with leaks from mill and from feed/discharge exhaust systems								o	o								

x Typical control technique.

o In use (but not typical) control technique.

+ Technically feasible control technique.

2.8.5 Control Technology

Control technology options for the IPFPE sources are presented in Table 2-52. This section discusses the fugitive emission sources and their related control technologies, with the exception of those indicated in Table 2-52 as negligible. A general discussion of control techniques for common IPFPE sources--material in loading, transfer/conveying, storage, transfer by clamshells, and loading--is presented in Section 2.1; however, characteristics of these operations peculiar to cement plants are also discussed here.

Raw Material Crushing/Screening - Control techniques for raw material crushing and screening operations at cement plants are essentially the same as those described for materials extraction and beneficiation in Section 2.6. These operations are typically enclosed and often located subsurface which further diminishes the potential for the escape of fugitive emissions. Water suppression via water sprays at the feed points of both primary and secondary crushing and screening operations are common. Hooding at bins, discharge points, and conveyor transfer points which exhausts to primary fabric filters are employed at some plants. Although coal dust can be collected by a fabric filter, the danger of an explosion must be noted.

Material Handling - Raw material and clinker handling results in fugitive emissions which are often controlled by the application of covers over transfer belts, or enclosing and/or hooding transfer points with exhaust to fabric filters. Properly designed hoods, used with 0.5-2 m^3/sec (1000-4000 cfm) fans, effectively control emissions.[6] Some plants use telescoping or ladder chutes for stockpiling of material, which confine the material and its free fall distance.[7] Wet suppression methods are also practiced, but

- 1.18 Mg (1.30 tons) of limestone
- 0.03 Mg (0.03 tons) of gypsum

There are essentially no by-products from the Portland cement industry. Flue dust when captured is often returned into the system.

Not included in the inventory are fugitive emissions from plant haul roads, kiln dust disposal, and quarrying operations (drilling, blasting, and truck loading). Emission factors for these operations may be found in Sections 2.1 and 2.6, respectively. Total model plant uncontrolled process fugitive particulate emissions are 3,656 Mg (4,022 tons) per year. The largest potential sources of fugitive emissions are outfall points to storage and screening operations.

2.8.4 Characteristics of Fugitive Emissions

Fugitive particulate emissions from Portland cement production consist basically of dust from various operations, but little information is available regarding the size range characteristics. The typical oxide composition ranges of clinker dust and cement dust are as follows.[5]

Compound	Fugitive emission oxide composition, percent by weight	
	Clinker dust	Cement dust
Silica	19-24	18-23
Al_2O_3	3-8	3-8
Fe_2O_3	1-5	1-5
CaO	62-69	61-66
MgO	0-5	0-5
SO_3	0-1	2-4
Free lime	0-2	0-2
Minor components	0-1	0-1

The emission factors with an "E" rating are at best order of magnitude estimates; consequently, actual emission rates at a given facility could differ significantly from those in Table 2-51. For example, one of the major potential fugitive emission sources is the handling of the various raw materials and clinker (sources 7-9 and 16-18). The storage area for these materials can be completely enclosed ventilated buildings, open ended roof structures, or completely open areas. Discharge of the materials to these storage areas can be by means of free fall from conveyors (extremely dusty for clinker) or by telescopic or ladder chutes. Thus, it is evident that these widely varying site specifics create a wide variation in the related emission rates.

The largest potential sources of uncontrolled fugitive emissions at cement plants include paved and unpaved roads, clinker handling and storage, raw material handling and storage, and cement load-out. Another potentially large source of fugitive emissions (though not covered here) is kiln dust disposal. See Section 2.1 for disposal practices.

2.8.3 Example Plant Inventory

The example plant inventory for Portland cement as shown in Table 2-51 presents potential fugitive emission quantities from the various uncontrolled sources within the process. The inventory represents a plant which produces 403,600 Mg (443,968 tons) of Portland cement per year. The plant inventory is not meant to display a typical plant, but merely a model plant with specified circumstances.

The assumed feed rate of raw materials to produce 1 Mg of Portland cement is as follows:

- 0.21 Mg (0.23 tons) of clay
- 0.14 Mg (0.15 tons) of sand
- 0.03 Mg (0.03 tons) of iron ore

Table 2-51 (continued). IDENTIFICATION AND QUANTIFICATION OF POTENTIAL FUGITIVE PARTICULATE EMISSION POINTS FOR PORTLAND CEMENT MANUFACTURING

Source of IPFPE	Uncontrolled fugitive emission factor	Emission factor reliability rating	Model plant fugitive emission inventory	
			Operating parameter, Mg/yr (tons/year)	Uncontrolled emissions Mg/yr (tons/yr)

[a] Estimate based on data presented in Section 2.1.2. Range shown is for taconite and coal railcar unloading.

[b] Reference 1.

[c] Estimated based on crushed stone emission factors (Reference 2). Note that approximately 80 percent of these emissions will fall out on plant property.

[d] Estimate based on data presented in Section 2.1.1.

[e] Estimated based on crushed stone emission factors (Reference 2). Note that approximately 60 percent of these emissions will fall out on plant property.

[f] Emissions for point 6 are included in emissions from point 5.

[g] Engineering judgement based on visual observations during plant visits.

[h] Emissions from point 9 are included in emissions from point 7.

[i] For complete development of this emission factor, refer to Section 2.1.4. For source 13 it was assumed that S = 4.0, D = 90, PE = 100, and K_1 = 0.75, K_2 = 0.5, and K_3 = 0.75. Reference 3.

[j] Emissions from points 12 are included in emissions from point 11.

[k] Based on partially enclosed structure: open on both ends with roof.

[l] Emissions from points 17 and 18 are included in emissions from point 16.

[m] Reference 4. Based on tests of mechanical unloading of cement to hopper and subsequent transport of cement by enclosed bucket elevator to elevated bins with a fabric sock over the bin vent.

[n] 88,930 Mg (97,940 tons) - clay
57,879 Mg (63,743 tons) - sand
14,431 Mg (15,893 tons) - iron ore
79,175 Mg (87,197 tons) - coal

[o] Raw material charged, crushed, screened, and crushed (2nd)
- 88,930 Mg (96,751 tons) - clay
- 57,879 Mg (62,965 tons) - sand
- 14,431 Mg (15,698 tons) - iron ore
- 490,105 Mg (539,763 tons) - limestone

[p] Includes 124 Mg (137 tons) of hydrophobe and grinding aid.

Table 2-51 (continued). IDENTIFICATION AND QUANTIFICATION OF POTENTIAL FUGITIVE PARTICULATE EMISSION POINTS FOR PORTLAND CEMENT MANUFACTURING

Source of IPFPE	Uncontrolled fugitive emission factor	Emission factor reliability rating	Model plant fugitive emission inventory	
			Operating parameter, Mg/year (tons/year)	Uncontrolled emissions (tons/yr)
14. Transfer of coal to grinding mill	Neg-0.1 kg/Mg transferred[g] (0.2 lbs/ton)	D	coal transferred 79,173 (87,195)	8 (9)
15. Leakage from coal grinding mills	Negligible[g]	E	-	-
16. Unloading-clinker/gypsum outfall to storage	2.5-5.0 kg/Mg of clinker and gypsum[g,k,l] (5.0-10.0 lbs/ton)	E	clinker/gypsum 405,022 (446,059)	1,519 (1,671)
17. Clinker/gypsum storage	1	-	-	1
18. Clinker/gypsum load-out	1	-	-	1
19. Finish grinding with leaks from mill and from feed/ discharge exhaust systems	0.05 kg/Mg of cement[g] (0.1 lbs/ton)	E	grinding feed[p] 403,627 (444,525)	20 (22)
20. Cement silo vents	Negligible[g]	E	-	-
21. Cement loading	0.118 kg/Mg of cement loaded[m] (0.236 lbs/ton)	E	cement loaded 375,443 (413,485)	44 (49)
22. Cement packaging	Neg-0.005 kg/Mg packed[g] (0.01 lbs/ton)	E	cement packaged 28,164 (30,980)	negligible

Table 2-51 (continued). IDENTIFICATION AND QUANTIFICATION OF POTENTIAL FUGITIVE PARTICULATE EMISSION POINTS FOR PORTLAND CEMENT MANUFACTURING

Source of IPFPE	Uncontrolled fugitive emission factor	Emission factor reliability rating	Model plant fugitive emission inventory: Operating parameter, Mg/yr (tons/year)	Model plant fugitive emission inventory: Uncontrolled emissions Mg/yr (tons/yr)
11. Raw blending	0.02 kg/Mg raw material blended[g,j] (0.05 lbs/ton)	E	Raw material 589,613 (649,355)	12 (13)
12. Blended material storage	j	-	-	j
13. Coal storage				
Loading onto pile	$\frac{(0.02)(K_1)(S/1.5)}{(PE/100)^2}$ kg/Mg material loaded onto pile[i]	D	Coal loaded 79,175 (87,197)	3 (3)
	$\left(\frac{(0.04)(K_1)(S/1.5)}{(PE/100)^2}\right.$ lb/ton$\left.\right)$			
Vehicular traffic	$\frac{(0.065)(K_2)(S/1.5)}{(PE/100)^2}$ kg/Mg material stored[i]	D	Coal stored 79,175 (87,197)	7 (8)
	$\left(\frac{(0.13)(K_2)(S/1.5)}{(PE/100)^2}\right.$ lb/ton$\left.\right)$			
Loading out	$\frac{(0.025)(K_3)(S/1.5)}{(PE/100)^2}$ kg/Mg material loaded out[i]	D	Coal loaded out 79,175 (87,197)	4 (4)
	$\left(\frac{(0.05)(K_3)(S/1.5)}{(PE/100)^2}\right.$ lb/ton$\left.\right)$			
Wind erosion	$\frac{(0.055)(S/1.5)}{(PE/100)^2}\frac{D}{90}$ kg/Mg material stored[i]	D	Coal stored 79,175 (87,197)	12 (13)
	$\left(\frac{(0.11)(S/1.5)}{(PE/100)^2}\frac{D}{90}\right.$ lb/ton$\left.\right)$			

Table 2-51. IDENTIFICATION AND QUANTIFICATION OF POTENTIAL FUGITIVE PARTICULATE EMISSION POINTS FOR PORTLAND CEMENT MANUFACTURING

Source of IPFPE	Uncontrolled fugitive emission factor	Emission factor reliability rating	Model plant fugitive emission inventory	
			Operating parameter, Mg/yr (tons/year)	Uncontrolled emissions Mg/yr (tons/yr)
1. Raw material unloading (rail, barge, truck) gypsum, iron ore, clay, limestone, sand, coal	Coal: 0.2 kg/Mg material[a] (0.4 lb/ton)	E	Coal unloaded[n] 79,175 (87,197)	16 (17)
	Other: 0.015-0.2 kg/Mg material[a] (0.03-0.4 lb/ton)	E	Materials unloaded[n] 161,240 (177,576)	17 (19)
2. Raw material charging to primary crusher	0.00015-0.02 kg/Mg of rock charged[b] (0.0003-0.04 lbs/ton)	D	Raw material[o] 591,421 (651,345)	6 (7)
3. Primary crusher	0.25 kg/Mg of rock crushed[c] (0.5 lbs/ton)	C	Raw material crushed 591,415 (651,338)	148 (163)
4. Transfer points and associated conveying	0.1-0.2 kg/Mg material handled[d] (0.2-0.4 lb/ton)	E	591,415 (651,338)	89 (98)
5. Vibrating screen	0.74 kg/Mg screened[e,f] (1.5 lbs/ton)	C	591,267 (651,175)	443 (488)
6. Secondary crusher	f	-	-	f
7. Unloading outfall to storage	1.5-2.5 kg/Mg raw material unloaded[g,h] (3.0-5.0 lb/ton)	E	590,824 (650,687)	1,182 (1,300)
8. Raw material storage	h	-	-	h
9. Transfer to conveyor via clamshell	h	-	-	h
10. Raw grinding mill and feed/ discharge exhaust systems	0.05 kg/Mg raw material milled[g] (0.1 lbs/ton)	E	Raw material 589,642 (649,387)	29 (32)

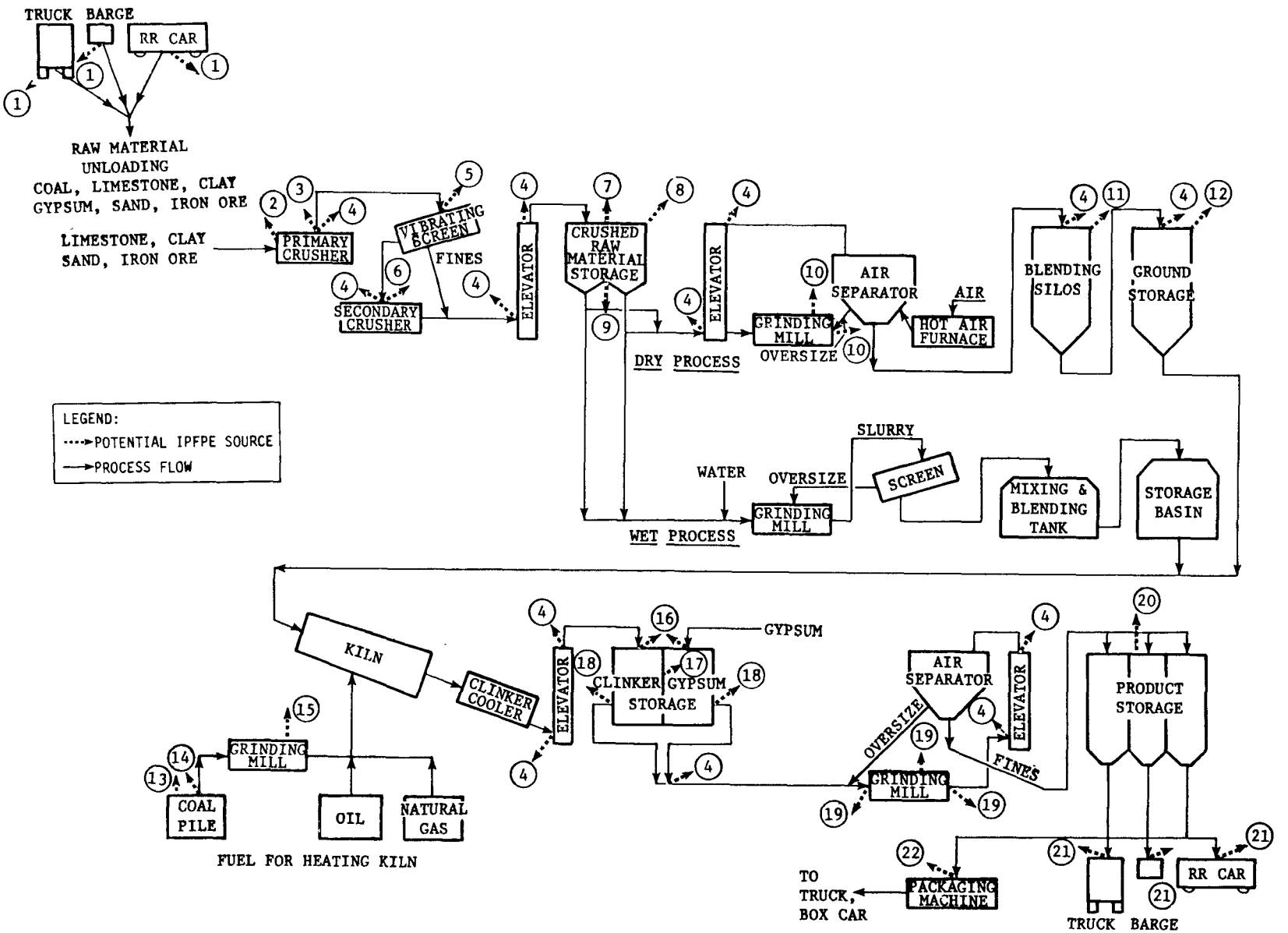

Figure 2-18. Process flow diagram for portland cement manufacturing showing potential industrial process fugitive particulate emission points.

limestone, to produce a slurry with water. This slurry is blended through quality control procedures and fed to the rotary kiln, where the water is driven off and the raw mixture calcined to form Portland cement clinker.

Calcination - The blended material (from either the wet or dry process) is fed directly to a rotating kiln or to a preheated system then into a long inclined rotating kiln. The hot product of the calcination process, cement clinker, is discharged from the kiln and immediately cooled in the clinker cooler. After cooling, the clinker is combined with gypsum (about 5% by weight) and ground in rotary ball mills. The milled cement is air classified and the oversized material returned to the mill. The cement is then stored to await packaging or bulk shipment by rail, barge or truck.

A process flow diagram for cement production is shown in Figure 2-18. Each potential process fugitive emission source is identified and explained in Table 2-51. A dust source common to all cement producing facilities, but not specifically included in the Figure or Table is plant roads. Proper evaluation of this emission category is explained in Section 2.1. In addition, limestone quarries, which are often an integral part of the cement facility, but not specifically included in this section, are discussed separately in detail in Section 2.6.

2.8.2 IPFPE Emission Rates

Table 2-51 presents a summary of uncontrolled emission factors for the cement facility IPFPE sources. Since these are potential uncontrolled emission rates, the site-specific level of control must be considered for application to a specific plant. Also included are reliability factors for each estimate.

2.8 PORTLAND CEMENT MANUFACTURING

2.8.1 Process Description

Portland cement is used for making concrete for construction of many kinds of structures such as buildings, bridges, and highways and in products such as concrete masonry, concrete pipe and many precast components for construction. Five types of Portland cement are produced in the United States to specifications which are governed by the desired end use, such as general construction, moderate heat release in massive structures, sulfate resistance, or high early strength.

Raw materials include limestone, clay or shale, iron-bearing materials, and siliceous materials. Most of these are taken from quarries by drilling and blasting procedures, then transported to crushers and screening plants. The product of these operations is transported to the storage facilities for continuation of the manufacturing process, which transforms these raw materials to a product known as "Portland cement clinker."

There are two alternative processes which are used to prepare the material for the manufacture of Portland cement - wet and dry:

Dry Process - The raw materials are proportioned and conveyed to a drying/grinding unit where they are dried and ground either separately or simultaneously. The product of grinding is air classified before storage, with the oversize material returned to the grinding circuit. The product is then blended and stored before subsequent calcination.

Wet Process - The raw materials generally include a naturally occuring wet marl or clay. Following the quarrying operation, they may be slurried in a wash mill and then ground to a high fineness with other raw materials, such as

8. Compilation of Air Pollutant Emission Factors. Second Edition with Supplements 1-5. U.S. Environmental Protection Agency, Office of Air Quality Planning and Standards. Publication No. AP-42. Research Triangle Park, North Carolina. February 1976.

9. Shannon, L.J., R.W. Gerstle, P.G. Gorman, D.M. Epp, T.W. Devitt, and R. Amick. Emissions Control in the Grain and Feed Industry, Volume I - Engineering and Cost Study. Midwest Research Institute. Kansas City, Missouri. EPA Contract No. 68-02-0213. Environmental Protection Agency Report EPA-450/3-73-003a. December 1973. 583 p.

10. Standard Support and Environmental Impact Statement: Standards of Performance for the Grain Elevator Industry. Environmental Protection Agency. Office of Air and Waste Management. Office of Air Quality Planning and Standards. Emission Standards and Engineering Division. July 1976.

REFERENCES FOR SECTION 2.7

1. The Storage and Handling of Grain. PEDCo Environmental, Inc. Prepared for Environmental Protection Agency, Region V. Contract No. 68-02-1355. Task Order No. 7. March, 1974.

2. Cowan, D.W. and H.J. Paulus. Relationship of Air Pollution to Allergic Diseases. Final Report from University Health Service and School of Public Health, University of Minnesota, Minneapolis, Minnesota, under Research Grant AP00090, Division of Air Pollution, U.S. Public Health Service. December, 1969.

3. Thimsen, D.J. and P.W. Aften. A Proposed Design for Grain Elevator Dust Collection. Journal of the Air Pollution Control Association. 18:738-742, November, 1968.

4. Grain Handling and Milling Industry, Background Information for Establishment of National Standards of Performance for New Sources. Environmental Engineering, Inc. EPA Contract No. CPA 70-142. Task Order No. 4. July 15, 1971. Draft. 60 p.

5. Air Pollutant Emission Factors. TRW Systems Group of TRW, Inc. National Air Pollution Control Administration Contract No. CPA 22-69-119. Report No. APTD-0923. April 1970.

6. Evaluation of Compliance Status of Grain Elevators in the State of Minnesota. PEDCo Environmental, Inc. Prepared for the U.S. Environmental Protection Agency, Contract No. 68-02-1321. Task Order No. 8. 102 p.

7. Peters, J.A., T.R. Blackwood, and R.A. Wachter. Source Assessment Document No. 34. Handling, Transport and Storage of Grain. Monsanto Research Corporation. Dayton, Ohio. EPA Contract No. 68-02-1874. November 1975. 107 p. Draft.

Table 2-50. TYPICAL TERMINAL ELEVATOR (INLAND) CONTROL DEVICES AND COSTS[a]

Operation	Example Plant Control and Cost Estimate								
	Selected device	Air flow m^3/sec (cfm)	Oprn. hr/yr	Electrical $/yr	Maintenance $/yr	Depreciation $/yr	Capital charges $/yr	Annualized cost $/yr	Installed cost $
Truck receiving[b]	Filter	5.8 (12,250)	1,000	550	1,230	3,564	1,782	7,126	35,640
Railroad car receiving	Filter	7.1 (15,000)	500	320	1,500	3,000	1,500	6,320	30,000
Box car loading[c]	Filter	4.7 (10,000)	200	100	1,000	5,874	2,937	9,911	58,740
Hopper car loading	Filter	4.7 (10,000)	300	150	1,000	2,574	1,287	5,011	25,740
Grain cleaning	Filter	4.7 (10,000)	500	320	1,000	2,470	1,235	5,025	24,700
Grain dryer (1) 70 m^3/hr (2,000 bu/hr)	Self cleaning screen	28 (60,000)	2,000	400	1,500	2,890	1,445	6,235	28,900
Scales and garners	Filters (2)	2x4.7 (2x10,000)	1,000	740	2,000	4,350	2,175	9,265	43,500
Grain handling and turning (including barge loading)	Filter	21 (45,000)	2,500	5,720	4,500	10,750	5,375	26,345	107,500
Total		85.4 (182,250)		8,300	13,472	35,472	17,736	75,238	354,720

[a] 1974 dollars.

[b] Includes cost of truck shed, $10,350.

[c] Includes cost of double track shed, $33,000.

Storage capacity - 1.76×10^5 m^3 (5.0×10^6 bu).
Throughput - 5.3×10^5 m^3 (15.0×10^6 bu) per year.
Leg capacity - 2 legs, each 1200 m^3 (35,000 bu) per hour.

Source: Reference 1.

Table 2-49. TYPICAL COUNTRY ELEVATOR CONTROL DEVICES AND COSTS[a]

Operation	Example Plant Control and Cost Estimate								
	Selected device	Air flow m^3/sec (cfm)	Oprn. hr/yr	Electrical $/yr	Maintenance $/yr	Depreciation $/yr	Capital charges $/yr	Annualized cost $/yr	Installed cost $
Loadout and receiving[b]	Filter	5.8 (12,250)	1,000	550	1,230	6,145	3,073	10,998	61,450[c]
Grain dryer, 35 m^3/hr (1,000 bu/hr)	Self cleaning screen	14 (30,000)	500	85	1,000	2,000	1,000	4,085	20,000
Scale, garner leg, bin vents	Filter	1.4 (3,000)	2,000	370	300	1,259	630	2,559	12,590
Total		21.2 (45,250)	3,500	1,005	2,530	9,404	4,703	17,642	94,040

[a] 1974 dollars.

[b] One filter serves truck receiving, truck loading, and car loading.

[c] Includes $24,269 for railroad car loading shed. (Assume truck loading is normally covered).

Storage capacity - 17600 m^3 (500,000 bu).
Throughput - 35,240 m^3 (1,000,000 bu) per year.
Leg capacity - 1 leg, 176 m^3 (5,000 bu) per hour.

Source: Reference 1.

Tables 2-49 and 2-50 give control costs in 1974 dollars for a typical country and terminal elevator, respectively.[1]

using telescoping spouts, choke loading, or reducing the flow of grain to reduce the velocity at which it leaves the spout.

Control of dust emissions in truck loading of grain is difficult because of variation in the sizes of trucks and the required movement of the loading spout. Aspiration inside the enclosure is used in a few cases by installing a hood at the discharge of the loading spout. The particulate matter is captured and ventilated to a cyclone or fabric filter.

Boxcar grain loading control is not common. One method of control is to cover the door area of the boxcar with a hood and ventilate the particulate matter to a fabric filter or cyclone.

Control of hopper car loading of grain is similar to the methods used for trucks. The loading is often done in a semienclosed area. A hood can be installed at the discharge of the loading spout. The dust generated in hopper car grain loading is ventilated from the hood to a fabric filter or cyclone. Telescoping spouts or choke-feed are also used.

Ship and barge grain loading can be controlled by covering the ship hold or barge opening with a tarp and ventilation from beneath the cover to a cyclone or fabric filter.[10] This may interfere with loading operations, however. The grain in loading a barge or ship usually falls a considerable distance into a hold. This results in the liberation of a cloud of dust. Another control method is to reduce the freefall distance of grain as it enters the hold to decrease the dust emitted. A telescoping loading spout kept extended to the grain surface will also reduce emissions. The telescoping spout may be equipped with ventilation to capture any dust generated.

in some metropolitan areas. Other elevators exhaust the bins internally in the grain elevator to prevent exhaust of the dust into the atmosphere.[9] Grain screening and cleaning emissions are controlled by hooding or enclosing the equipment with exhaust to a cyclone or fabric filter. Some screens with air-tight enclosures require no ventilation to control devices.

Grain dryers present a difficult problem for air pollution control. Large volumes of air are exhausted from the dryers, the exhausts have large cross sectional areas, the dust has a low specific gravity, and the exhaust stream has a high moisture content.

Rack or column dryers are commonly employed to dry grain at elevators. Column dryers have a lower emission rate than rack dryers since some of the dust is trapped by a column of grain. The dryers may use screen systems to control particulate matter. The screens may be continuously vacuumed to keep the screens clean and prevent air flow blockage. Another screen cleaning technique is a sliding-bar self-cleaning system. Emissions from the dryer also may be collected by a cyclone. Fabric filters are rarely used because the high moisture content of the exhaust tends to blind them.

Grain turning is a dusty operation and so many elevators are now cooling by using aeration of grain bins. In addition, aeration is about 40 percent less dusty than turning and greatly reduces the need for transferring grain for cooling.[3]

As in truck unloading, the truck loading operation is best controlled if the loading is done in a three-sided and top enclosed shed with a closeable door. The loading involves the free fall of grain into the truck with considerable dust emission. The dust emissions are reduced when

Another common boxcar unloading technique is mainly used at terminal elevators. This technique is a mechanical boxcar dump which tilts the boxcar to dump the grain into a receiving pit. This rapid unloading method creates a large cloud of dust which may be difficult to control.

The emissions from these two boxcar unloading methods may be controlled by undergrate aspiration to a fabric filter or a cyclone. However, large volumes of air are necessary for over 95 percent dust capture efficiency.

Barge unloading is primarily done by a retractable bucket type elevator (marine leg). This is lowered into the hold of the barge. Some generation of fugitive dust occurs in the hold as the grain is scooped out and also at the top of the marine leg where the grain is discharged onto a conveyor. Control for barge unloading is best carried out by completely enclosing the leg and aspirating the dust through a fabric filter or cyclone.

The control of transferring and conveying grain in an elevator is often carried out by ducting many individual dust sources to a common dust collector system. This is commonly done for the dust sources in the headhouse. Thus aspiration systems serving elevator legs, transfer points, bin vents, etc., may all be ducted to one collector. In these control systems it is desirable to enclose all possible conveyors so that little particulate matter can be emitted. Trippers are usually hooded and ventilated to cyclones or fabric filters. Emissions from grain scale weighing hoppers and their associated surge bins (garners) also may be vented to a common collector.

Bin vents are common to both country and terminal elevators. Many elevators vent the dust generated by the flow of grain into storage bins directly to the atmosphere. Small fabric filter units have been used as a dust collector

Effective dust control during truck unloading operations generally requires the use of undergrate aspiration and a suitable enclosure or shed over the receiving pit. The aspirated air is directed to a control device which is usually a cyclone, but fabric filters are gradually replacing them on new grain elevators.

The type of enclosure for the unloading effects the quantity of fugitive dust emitted. Some grain elevators use only a two-sided enclosure with a roof. Many country terminals use no enclosures at all. The most suitable structure for fugitive emission control is a three-sided and a top enclosure or drive-through tunnel where a door is lowered each time a truck is unloaded. Ultimate control is obtained when the truck unloading is conducted in a totally enclosed shed or drive-through tunnel with two quick-closing doors. With this enclosure type control structure most windage fugitive emission losses could be prevented during truck unloading; however, the cost may be prohibitive.

Best railcar unloading emissions control requires similarly total enclosure sheds or drive-through tunnels with quick closing doors. However, some country elevators have no enclosures for railcar unloading.

Control problems are different from dust hopper cars than from boxcars. Two unloading control methods have been used for hopper cars. One method uses undergrate aspiration feeding to a cyclone or fabric filter in a manner similar to truck unloading. The second method uses a small receiving hopper to effect choke unloading. Boxcar unloading is usually carried out by "breaking" a grain door inside the car. This produces a surge of grain and dust as the grain falls into the receiving hopper. The grain remaining has to be scooped out. Each scoop of grain can result in a cloud of dust.

Table 2-48. CONTROL TECHNIQUES FOR GRAIN ELEVATORS IPFPE SOURCES

Industry: Grain Elevators	Negligible emissions	IPFPE source typically uncontrolled	FUGITIVE EMISSIONS CAPTURE AND CONTROL METHODS														
				Preventative procedures and operating changes							Capture methods				Removal equipment		
			Control technologies identified in Section 2.1	Wet suppression (water and/or chemical)	Confinement by enclosure	Better control of raw material quality	Better control of operating parameters and procedures	Improved maintenance and/or construction program	Increase exhaust rate of primary control system	Process change	Fixed hoods, curtains, partitions, covers, etc.	Movable hoods with flexible ducts	Closed buildings with evacuation	Enclosure of the operation with evacuation	Fabric filter	Cyclone	Screen
1. Receiving[a]																	
Truck unloading		✓[b]			x						x			o	x	x	
Railcar unloading		✓[b]			x		o				x			o	x	x	
Barge unloading					x									o	x	x	
2. Transferring and conveying (total) which includes following[a]																	
a. Receiving elevator leg and head											x				x	x	
b. Garner and scale vents		✓									x				x	x	
c. Distributor, trippers, and spouting		✓									x				x	x	
d. Storage bin vents		✓									x				x	x	
e. Turning										o	x				x	x	
3. Screening and cleaning					o						x			x	x	x	
4. Drying														x	o	o	x
5. Shipping[a]																	
Truck loading		✓			x		x				o	o		o	o	o	
Railcar loading		✓			x		x				o	o		o	o	o	
Barge or ship loading		✓			x						o	o			o	o	

x Typical control technique.

o In use (but not typical) control technique.

+ Technically feasible control technique.

[a] See also Section 2.1.

[b] Typically uncontrolled at country elevators.

In Table 2-47 are presented the results of tests of the inlet of a cyclone which vented the elevator leg.[9] These cyclone inlet emissions can be considered an approximation of the particle size distribution of the fugitive particulate emissions from an uncontrolled elevator leg vented to atmosphere.

Table 2-47. PARTICULATE SIZE DISTRIBUTION FOR ELEVATOR LEG CYCLONE INLET TEST[9]

US Sieve mesh	Size opening, (μm)	Cumulative weight, percent greater than
100	149	32.7
170	88	44.7
200	74	48.7
325	44	68.0
-	20	91.0
-	10	99.1
-	5	99.9
-	1	99.9

During corn drying "bees wings" which are the filmy outer skin of the corn kernel, are emitted as well as normal grain dust. Essentially all bees wing emissions are over 50 μm in diameter and the mass mean diameter is probably in the region of 150 μm.[4]

2.7.5 Control Technology

Control Technology options for grain elevator IPFPE sources are presented in Table 2-48. Specific dust control systems for the various grain handling operations are discussed in the following paragraphs. Additional information regarding loading/unloading and transfer/conveying may be found in Section 2.1.

particulate fugitive emission quantities from the various operations at grain elevators.

Yearly throughputs are chosen for the example terminal and country elevators as 150,000 and 22,000 m^3 (4,250,000 and 624,000 bushels) respectively. These plant inventories are not meant to display typical grain elevators but merely potential sets of conditions expected. Corn, wheat, and soybeans are the grains to be stored and handled in these model plants. Wheat is chosen as 40 percent of the bushel throughput, while corn and soybeans are each chosen as 30 percent of the bushel throughput. Not included in the inventory are fugitive emissions from plant roads. These sources may be calculated using procedures in Section 2.1.

The total model grain elevator uncontrolled process particulate fugitive emissions are estimated to be 484 Mg (533 tons) per year for the terminal elevator and 122 Mg (134 tons) per year for the country elevator. The major sources of fugitive emissions are receiving and shipping, transfer and conveying, drying, and screening and cleaning.

2.7.4 Characterization of Fugitive Emissions

The fugitive particulate emissions from grain elevators result primarily from the unclean state in which grain is received at elevators. It may contain a small amount of spores of smuts and molds, insect parts, weed seeds, various pollens and siliceous dust from vegetation and soil in the vicinity in which it was grown. But most of the dust is bristles and other particles from the outer coats of grain kernels produced by the abrasion of the individual kernels of grain.

Grain dust has a specific gravity normally in the range 0.8 to 1.5 as compared to various other industrial dusts which usually have specific gravities between 2.0 and 2.5.[4] Grain dust is mostly in the range of 10 to 100 μm in size.[3]

- Moisture content of grain (usually in range 10-30 percent).

2. Equipment characteristics in the individual grain elevator vary in -

   - Degree of enclosure at loading and unloading area,
   - Type and speed of belt or other conveyors especially at transfer points,
   - Type of cleaner and dryer used,
   - Amount and type of control equipment used, if any.

3. Amount of previous handling and transfer of grain (which gives rise to fragmentation and rubbing off small particles of chaff from the grain).

Most of these factors have not been studied in sufficient detail to permit a precise evaluation of their importance to IPFPE rates.[9] Some grains are considerably more dusty than others, but the data are insufficient to quantitatively assess the differences. For example, field run soybeans, oats, and sorghum are usually very dusty whereas wheat is a comparatively clean grain.[4] Oats and rye generally generate more dust in a given grain elevator operation than do wheat or corn.[3]

With an understanding of these considerations the potential uncontrolled fugitive emission rates in Table 2-46 may be applied to a specific elevator under consideration. More data will be available in the near future in an AP-42 supplement.

2.7.3 Example Plant Inventory

The example plant inventories for a terminal grain elevator and for a country grain elevator are shown in Table 2-46. In this Table are also shown the potential yearly

Table 2-46 (continued). IDENTIFICATION AND QUANTIFICATION OF POTENTIAL FUGITIVE PARTICULATE EMISSION POINTS FOR COUNTRY AND TERMINAL ELEVATORS

[a] Reference 4.
[b] Reference 5.
[c] Reference 7.
[d] Reference 8.
[e] Reference 3.
[f] Emissions for garner and scale included in receiving elevator emissions.
[g] Emissions for storage bin vents and turning included in total.
[h] Reference 6.
[i] Reference 9.
[j] Emissions for receiving elevator (country elevator) included in total.
[k] This value is for scale vents only.
[l] Emissions for distributor, trippers, and spouting included in total.
[m] This operation is not normally done in country elevators.

Table 2-46 (continued). IDENTIFICATION AND QUANTIFICATION OF POTENTIAL FUGITIVE PARTICULATE EMISSION POINTS FOR COUNTRY AND TERMINAL ELEVATORS

Source of IPFPE	Uncontrolled fugitive emission factor	Emission factor reliability rating	Model plant fugitive emission inventory	
			Operating parameter, Mg/yr (tons/year)	Uncontrolled emissions Mg/yr (tons/yr)
2c. Distributor, trippers and spouting	1			
2d. Storage bin vents	1.0 kg/Mg stored[h] (2.0 lb/ton)	E		
2e. Turning	m			m
3. Screening and cleaning	3.5-5.0 kg/Mg screened & cleaned[b,d,i] (7.0-10.0 lb/ton)	E	Screened & cleaned 4,159 (4,575)	20 (22)
4. Drying	0.095-4.0 kg/Mg dried[a,b,c,d,e] (0.19-8.0 lb/ton)	D	Dried 3,837 (4,232)	8 (9)
5. Shipping				
Truck loading	0.07-4.0 kg/Mg loaded[b,c,d,h] (0.14-8.0 lb/ton)	D	Grain shipped by truck 8,318 (9,161)	17 (19)
Railcar loading	0.007-4.0 kg/Mg loaded[b,c,d,h] (0.015-8.0 lb/ton)	D	Grain shipped by railcar 8,318 (9,161)	17 (18)
Barge loading	0.001-4.0 kg/Mg loaded[b,c,d,h] (0.002-8.0 lb/ton)	D	0 (0)	0 (0)

Table 2-46 (continued). IDENTIFICATION AND QUANTIFICATION OF POTENTIAL FUGITIVE PARTICULATE EMISSION POINTS FOR COUNTRY AND TERMINAL ELEVATORS

Source of IPFPE	Uncontrolled fugitive emission factor	Emission factor reliability rating	Model plant fugitive emission inventory	
			Operating parameter, Mg/yr (tons/year)	Uncontrolled emissions Mg/yr (tons/yr)
5. Shipping				
Truck loading	0.07-1.75 kg/Mg loaded[a,b,c,d] (0.14-3.5 lb/ton)	D	0 (0)	0 (0)
Railcar loading	0.007-1.5 kg/Mg loaded[a,b,c,d,e] (0.015-3.0 lb/ton)	D	Grain shipped by railcar 96,314 (106,208)	73 (80)
Barge or ship loading	0.001-1.75 kg/Mg loaded[a,b,c,d,e] (0.002-3.5 lb/ton)	D	Grain shipped by barge or ship 16,996 (18,742)	15 (16)
II. Country Elevators				
1. Receiving				
Truck unloading	0.16-4.0 kg/Mg unloaded[b,c,d] (0.32-8.0 lb/ton)	D	Grain received by truck 16,635 (18,322)	35 (38)
Railcar unloading	0.02-4.0 kg/Mg unloaded[b,c,d] (0.04-8.0 lb/ton)	D	0 (0)	0 (0)
Barge unloading	2.5-4.0 kg/Mg unloaded[b,d] (5.0-8.0 lb/ton)	E	0 (0)	0 (0)
2. Transferring and conveying (total) which includes following:	1.0-2.0 kg/Mg transferred[b,d,h,i] (2.0-4.0 lb/ton)	D	Transferred & conveyed 16,635 (18,332)	25 (28)
2a. Receiving elevator leg and head	j			
2b. Garner and scale vents	1.0 kg/Mg transferred[h,k] (2.0 lb/ton)	E		

Table 2-46. IDENTIFICATION AND QUANTIFICATION OF POTENTIAL FUGITIVE PARTICULATE EMISSION POINTS FOR COUNTRY AND TERMINAL ELEVATORS

Source of IPFPE	Uncontrolled fugitive emission factor	Emission factor reliability rating	Model plant fugitive emission inventory	
			Operating parameter, Mg/yr (tons/year)	Uncontrolled emissions Mg/yr (tons/yr)
I. Terminal Elevators				
1. Receiving				
Truck unloading	0.16-1.75 kg/Mg unloaded[a,b,c,d,e] (0.32-3.5 lb/ton)	D	Grain received 45,324 (49,980)	43 (48)
Railcar unloading	0.02-1.5 kg/Mg unloaded[a,b,c,d,e] (0.04-3.0 lb/ton)	D	Grain received 67,986 (74,970)	52 (57)
Barge unloading	0.04-1.75 kg/Mg unloaded[a,b,c,d,e] (0.08-3.5 lb/ton)	D	0 (0)	0 (0)
2. Transferring and conveying (total)	0.5-1.25 kg/Mg transferred[a,b,d,e] (1.0-2.5 lb/ton)	D	Transferred and conveyed 113,310 (124,950)	99 (109)
2a. Receiving elevator leg and elevator head	0.25 kg/Mg transferred[e,f] (0.5 lb/ton)	E		
2b. Garner and scale vents	f			
2c. Distributor, trippers, and spouting	0.25 kg/Mg transferred[e] (0.5 lb/ton)	E		
2d. Storage bin vents	g			
2e. Turning	g			
3. Screening and cleaning	0.095-4.6 kg/Mg screened & cleaned[a,b,d,e] (0.19-9.2 lb/ton)	D	Screened & cleaned 56,655 (62,475)	133 (147)
4. Drying	0.095-4.0 kg/Mg dried[a,b,c,d,e] (0.19-8.0 lb/ton)	D	Dried 33,535 (36,975)	69 (76)

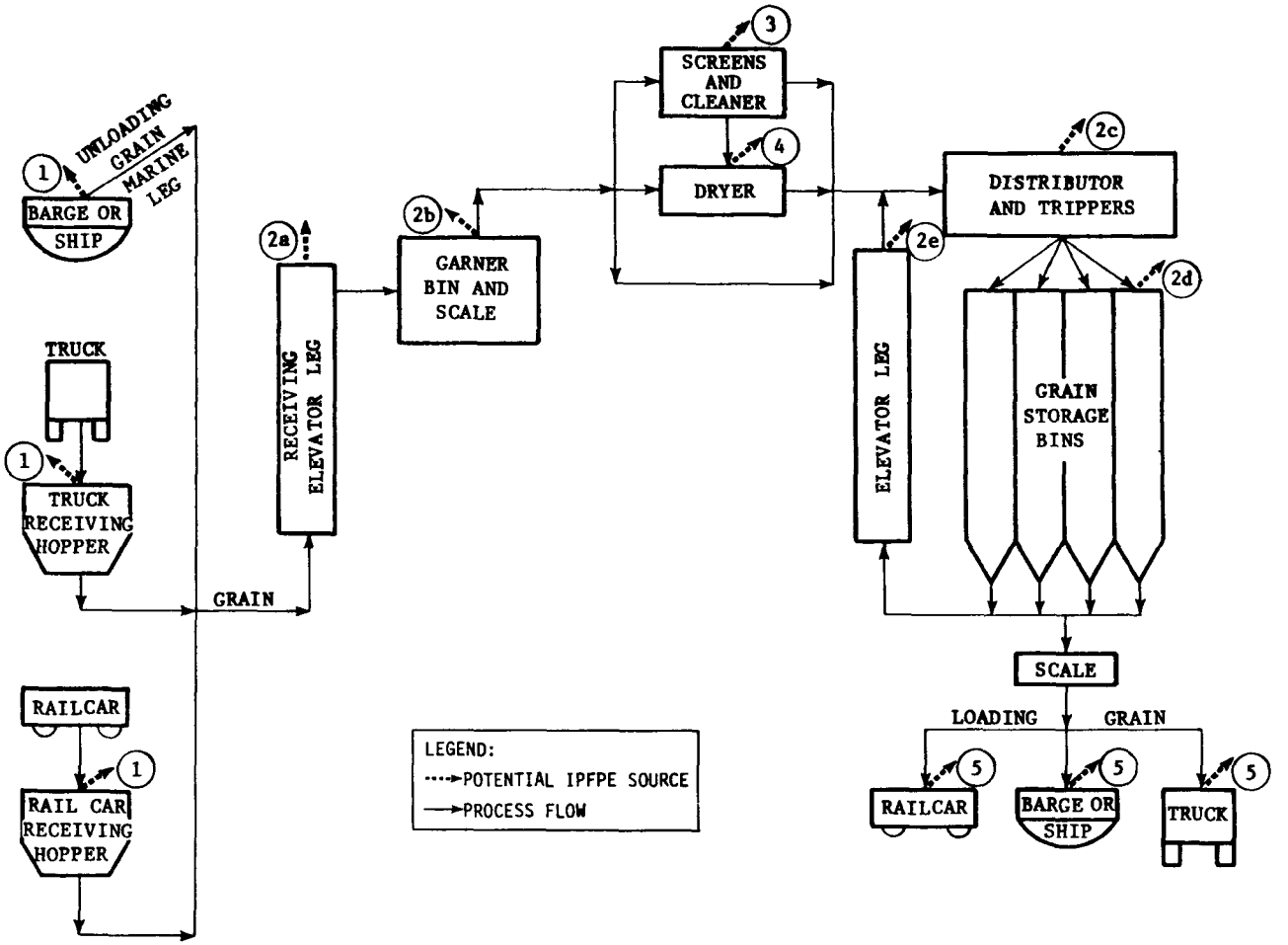

Figure 2-17. Process flow diagram for country and terminal grain elevators showing potential industrial process fugitive particulate emission points.

cools the grain about 6°C (10°F). Turning may be necessary several times a year depending on moisture content, grain temperature, and the length of time the grain has been stored without aeration.[3]

A process flow diagram for country and terminal grain elevators is shown in Figure 2-17. The potential process fugitive emissions are identified and explained in Table 2-46. Plant roads are a dust source common to all grain elevators but not specifically included in Table 2-46 or Figure 2-17. Proper evaluation of dust from plant roads is explained in Section 2.1.

2.7.2 IPFPE Emission Rates

Table 2-46 presents a summary of measured uncontrolled fugitive emission factors for terminal and country grain elevators. The values were measured during grain handling operations on a variety of grains such as corn, wheat, and barley. But measurements are not available for every common grain. Fugitive emission factors for rye and flaxseed are particularly lacking. Also included in Table 2-46 are reliability factors for the values of each handling and storage operation.

The Table lists wide ranges for measurements of many fugitive emission factors. The measured values will differ when:

1. Source and type of grain being handled varies from day to day in -

   - Quality and grade of grain (today's corn hybrids are considerably more dusty than those of a few years ago[4] when some of the emission measurements were made),

   - Kind and amount of foreign material and grain dust in the grain initially (usually 5 percent or less),

grain may contain crop soil, weeds, insects, and large contaminants such as sticks or stalks. Other dusts may be produced from the grain itself by abrasion during handling and storage. Cleaning may consist of scalping (removing large foreign objects) then air aspiration. After cleaning the grain may be classified by a series of screens.

Certain grains, especially barley, oats, wheat, corn and sorghum, must be dried to specified percentage moisture contents before long-term storage in a terminal elevator. If not removed, excess moisture can cause the grain to spoil. Grain is generally dried at the first elevator receiving it, therefore, most grain is dried at country elevators. However terminal elevators usually have drying facilities also. Drying facilities are used predominantly during the harvest season. The amount of grain dried each year depends on the wetness of the harvest season.

Fumigants and aeration are used to prevent or eliminate grain infestation by insects, molds, and fungi. One method of their extermination is to seal off all bin openings and use a fumigating gas such as carbon disulfide or chloropicrin. The fumigant gas is then vented from the bins through the bin vents which are ordinarily used to vent air from the bins as the grain enters them. These bin vents are small screen-covered openings located at the top of the storage bins or silos. Elevator legs and weigh scales are also vented to the atmosphere to relieve air displaced by the grain being handled.

Slow grain fermentation and heat generation may occur in bins used for long-term storage. It then becomes necessary to "turn-the-bins" to prevent grain deterioration. In the turning operation the grain from one bin is transported by conveyor and elevator leg to another bin. Bin turning

Table 2-45. GUIDELINES FOR DIFFERENTIATION OF COUNTRY AND TERMINAL ELEVATORS[1]

Operation	Country elevator	Terminal elevator
Receiving method	Grain received primarily by truck from farmers within 32 km (20 miles) of the elevator	Receives grain by truck, rail or barge
Receiving leg capacity	350 m^3 (10,000 bushels) per hour or less	1200 m^3 (35,000 bushels) per hour or more
Shipping method	Grain shipped out by truck, railcar, or barge	Grain shipped out by truck, railcar, barge, or ship
Storage capacity	530 to 70,000 m^3 (15,000 to 2,000,000 bushels) of grain	70,000 m^3 (2,000,000 bushels) of grain and greater

From the top portion of the elevator (known as the "headhouse") a distributor or tripper directs the grain received into one of several separate bins or silos. Before or after the bins or silos the grain is transported to a garner bin and then into a weighing scale bin. The scale is a key transfer point in the elevator and all grain passes through it. A country elevator usually has one scale but a terminal elevator may have as many as four. From the scale the grain is spouted onto a conveyor for delivery into its specified storage bin, or allowed to fall through suitable loading devices for shipment from terminal elevators by truck, railcar, barge, or ship. Country elevators ship primarily by truck and rail in nearly equal quantities.

The grain may also be cleaned, dried, turned, and fumigated in an elevator. Cleaning is necessary because the

2.7 COUNTRY AND TERMINAL GRAIN ELEVATORS

2.7.1 Process Description

There are approximately 10,000 grain elevators in the United States. Among the grains they store and handle are corn, wheat, rye, oats, barley, flaxseed, grain sorghum (milo), and soybeans. Grain elevators may be classified as country elevators and terminal elevators. Guidelines for this differentiation are briefly summarized in Table 2-45.[1]

Operational activity at different plants varies widely. Country elevators operate primarily during the harvest season and hold grain only until a market can be found to sell the grain to terminals, exporters, and/or to processors. Terminal elevators are large elevators which operate the year round. Terminal elevators receive grain both from farmers directly and from the smaller country elevators. The grains received by terminal elevators may be stored for long periods and must maintain their quality during storage. The elevators which store U.S. Government owned grain may do relatively little processing of it in the course of a year. Other elevators used for grain merchandising have much more activity, and may handle a volume of grain exceeding 15 times their storage capacity in one year.[2]

Country and terminal elevators employ similar grain handling operations. They typically grade for grain quality and dust content, weigh, and dump grain from trucks, rail cars, or barges into receiving hoppers. The grains received are then transported by conveyors (belt, screw, or drag types) and bucket receiving elevator legs which elevate the grain to the top of the elevator.

25. Air Pollution Control at Crushed Stone Operations. National Crushed Stone Association. Washington, D.C. February 1976.

26. Markey, Walt Jr. Dust Control at a Limestone Quarry. Paper presented at the 69th Annual Meeting of the Air Pollution Control Association. Portland, Oregon. June 27 - July 1, 1976.

27. Evans, Robert J. Methods and Costs of Dust Control in Stone Crushing Operations. U.S. Bureau of Mines, Information Circular 8669. 1975.

28. Vervaert, Alfred E., Richard Jenkins, and Allen Basola. Standards Support and Environmental Impact Statement. An Investigation of the Best Systems of Emission Reduction for Quarrying and Plant Process Facilities in the Crushed and Broken Stone Industry, Draft. U.S. Environmental Protection Agency, Office of Air Quality Planning and Standards, Emission Standards and Engineering Division. Research Triangle Park, North Carolina. August 1975.

29. Dean, K.C. and R. Havens. Stabilization Mineral Wastes. Engr. Mining Journal, pp. 99-103 (April, 1971).

30. Cole, Howard W., Jr. The Use of Foam Suppressants in the Control of Particulate Emissions from Grinding, Crushing, and Transfer Operations in the Mining and Rock Crushing Industries. Paper presented at the Fifth Annual Industrial Air Pollution Control Conference. Knoxville, Tennessee. April 3-4, 1975.

31. Sultan, H.A. Soil Erosion and Dust Control of Arizona Highways, Part IV, Final Report. Field Testing Program. Arizona Transportation and Traffic Institute. Prepared for the Arizona Department of Transportation. November 1975.

32. Development of an Implementation Plan for Suspended Particulate Matter in the Phoenix Area. TRW Environmental Engineering Division. Redondo Beach, California. Prepared for the U.S. Environmental Protection Agency. August 1976.

17. Development of Emission Factors for Fugitive Dust Sources, U.S. Environmental Protection Agency, Research Triangle Park, North Carolina, Publication Number EPA-450/3-74-037, June 1974.

18. Roberts, J.W., A.T. Rossano, P.T. Bosserman, G.C. Hofer, and H.A. Watters. The Measurement, Cost, and Control of Traffic Dust and Gravel Road in Seattles' Suwamish Valley. Paper No. AP-72-5 presented at the Annual Meeting of the Pacific Northwest International Section of the Air Pollution Control Association, Eugene, Oregon, November 1972.

19. Johnson - March Corporation. Chem-Jet Dust Suppresion. Product Information Brochure CJ@ (1963).

20. Chemical Treatment of Waste Tailings Puts and End to Dust Storms. Engr. Mining Journal, pp. 104-105 (April, 1971).

21. Dean, K.C. and R. Havens. Reclamation of Mineral Milling Wastes. Presented at the Annual AIME Meeting, San Francisco, California, February, 1972.

22. Armburust, D.V. and J.D. Dickerson. Temporary Wind Erosion Control: Cost and Effectivenss of 34 Commercial Materials. J. Soil Water Conserv. 26 (4): 154-157 (1971).

23. Evaluation of Fugitive Dust Emissions from Mining, Task 2 Report, Assessment of the Current Status of the Environmental Aspects of Fugitive Dust Sources Associated with Mining. PEDCo Environmental Specialists, Inc. Prepared for U.S. Environmental Protection Agency, Industrial Environmental Research Laboratory, Resource Extraction and Handling Division. Contract No. 68-02-1321, Task Order No. 36. Cincinnati, Ohio. June 1976.

24. Renninger, F.A. and R.C. Meininger. Environmental Factors in the Aggregate Industry. Paper presented at the Environmental Quality Conference for the Extractive Industries of the American Institute of Mining, Metallurgical, and Petroleum Engineers, Inc. Washington, D.C. June 7-9, 1971.

8. Chalekode, P.K. and J.A. Peters, Assessment of Open Sources. Monsanto Research Corporation, Dayton, Ohio. (Presented at Third National Conference on Energy and the Environment. College Corner, Ohio. October 1, 1975.). 9 p.

9. Development of Emission Factors for Fugitive Dust Sources. U.S. Environmental Protection Agency, Research Triangle Park, North Carolina. Publication Number EPA-450/3-74-037. June 1974.

10. Investigation of Fugitive Dust--Sources, Emissions, and Control. U.S. Environmental Protection Agency, Research Triangle Park, North Carolina. Publication Number EPA-450/3-74-036. 1974.

11. Supplement No. 5 for Compilation of Air Pollutant Emissions Factors. Second Edition. U.S. Environmental Protection Agency, Research Triangle Park, North Carolina. April 1975.

12. Compilation of Air Pollutant Emission Factors. Second Edition. U.S. Environmental Protection Agency, Office of Air and Water Management, Office of Air Quality Planning and Standards. Publication No. AP-42. Research Triangle Park, North Carolina. February 1976.

13. Air Emission Sources from a Lurgi Dry-Ash Gasification Facility Using Lignite Coal. In: North Dakota Air Quality Maintenance Area Analysis. Appendix B. PEDCo-Environmental Specialists, Inc., Cincinnati, Ohio. Prepared for U.S. Environmental Protection Agency. Contract No. 68-02-1375, Task Order 19. Denver, Colorado. March 1976.

14. Fugitive Dust from Mining Operations--Appendix, Final Report, Task No. 10. Monsanto Research Corporation, Dayton Ohio. Prepared for U.S. Environmental Protection Agency, Research Triangle Park, North Carolina. May 1975.

15. Air Pollutant Emissions in the Northwest Colorado Coal Development Area. Environmental Research and Technology, Westlake Village, California. 1975.

16. Environmental Impacts, Efficiency, and Cost of Energy Supply and End Use. Vol. 1. Hittman Associates, Incorporated, Columbia, Maryland. Prepared for Council on Environmental Quality, National Science Foundation, and U.S. Environmental Protection Agency. November 1974.

REFERENCES FOR SECTION 2.6

1. Evaluation of Fugitive Dust from Mining, Task 1 Report. PEDCo-Environmental Specialists, Inc., Cincinnati, Ohio. Prepared for Industrial Environmental Research Laboratory/REDHD, U.S. Environmental Protection Agency, Cincinnati, Ohio. Contract No. 68-02-1321, Task No. 36, June 1976.

2. Environmental Protection in Surface Mining of Coal. U.S. Environmental Protection Agency, Cincinnati, Ohio. Publication Number EPA-670/2-74-093. October 1974.

3. Emission Estimates for the Berkeley Pit Operations of Anaconda Company. PEDCo-Environmental Specialists, Inc., Cincinnati, Ohio. Prepared for Montana Air Quality Bureau, Helena, Montana. September 1975.

4. O'Boyle, Charles J. Report of Inspection of the Berkeley Pit Mining and Primary Crushing Operations on July 2, 1975. U.S. Environmental Protection Agency, Denver, Colorado. August 1975.

5. Particulate and Sulfur Dioxide Area Source Emission Inventory for Duval, Hillsborough, Pinellas, and Polk Counties, Florida. PEDCo-Environmental Specialists, Inc., Cincinnati, Ohio. Prepared for U.S. Environmental Protection Agency. Contract No. 68-02-1375, Task Order 9. Atlanta, Georgia. June 1975.

6. Environmental Impact Statement for Northwest Colorado Coal Development. U.S. Department of the Interior, Bureau of Land Management, Denver, Colorado. Unpublished.

7. Energy Alternatives: A Comparative Analysis. University of Oklahoma, Norman, Oklahoma. Prepare for Council on Environmental Quality, Energy Research and Development Administration, U.S. Environmental Protection Agency, Federal Energy Administration, Federal Power Commission, U.S. Department of the Interior, and National Science Foundation. May 1975.

Reclamation of mined areas is both a source of and a control technique for fugitive dust, i.e. the short-term reclamation operations such as regrading and revegetation which produce fugitive dust are designed to ultimately result in an area which is stabilized and protected over the long-term from the erosion mechanisms of wind and runoff.

Reduction of Wind Speed - Wind can contribute significantly to all of the mining fugitive dust sources, both by erosion of the exposed surfaces of storage areas, tailings piles, and reclaimed areas and by direct transport of the dust generated by the other mining operations. Therefore, reduction of surface wind speed across the source is a logical means of reducing emissions. This takes such diverse forms as windbreaks, enclosures or coverings for the sources, and planting of tall grasses or grains on or adjacent to exposed surfaces. The vegetative techniques all need a soil which supports growth -- containing nutrients, moisture, proper texture, and no phytotoxicants. These requirements, especially adequate moisture, are often not readily available in mining areas and are often the reason that natural protection against wind erosion is insufficient.

The large size of most of the mining fugitive dust sources precludes the widespread use of enclosures or wind barriers from practical considerations. A natural wind barrier is usually created for overburden removal and shovel/truck loading by the depressed location of these operations.

Many materials have been tried for physical stabilization of fine tailings. The materials most often used are rock and soil obtained from areas adjacent to the wastes to be covered. Soil provides an effective cover and a habitat for encroachment of local vegetation. However, it is not always available in areas contiguous to the tailings piles and, even where available, it may be costly to apply. Crushed or granulated smelter slag, another waste product, has been used to stabilize tailings. Another physical method of control which has been employed is covering with bark or harrowing straw into the top few inches of tailings.

tailings area west of Salt Lake City have been successfully stabilized by aerial application of chemicals.*

Recently, several tailings piles have been successfully planted by use of a combination chemical-vegetative technique. The chemical stabilizers hold more water near the surface of the otherwise porous tailings, thus creating a more favorable environment for growth of vegetation. Chemicals are selected which do not have an inhibitory effect on the plants.

An effective, long lasting method of dust control from storage piles is the addition of chemicals to the water sprays. Rather than acting as chemical soil stabilizers to increase cohesion between particles, most of these chemicals work as wetting agents to provide better wetting of fines and longer retention of the moisture film. Some of these materials remain effective without rewatering for weeks or months. The system of application can be a continuous spray onto the material during processing or a water truck with hose and spray nozzle. The limiting factor here is the possibility of contaminating the stored material with the chemical dust suppressant.

Foam suppressants have recently been applied to dust control in coal mining with some success. Other potential uses of foam suppressants include tunneling machines, and rock quarries.[30]

When using any chemical suppressant care must be taken so as not to endanger nearby water quality as a result of runoff from treated areas.

---

* Mention of company or product names is not to be considered as an endorsement by the U.S. Environmental Protection Agency

However, in tests on public roads conducted by several different highway departments, no commercial material has been found which retains its effectiveness over a moderate period of time, i.e., two months, under traffic conditions. Most of the treated surfaces abrade badly to the depth of penetration of the chemical, which would be more of a factor with heavy bearing loads experienced by mining haul roads; others which maintain a stabilized surface with traffic are water-soluble and lose their effectiveness after rains. Several surface treatment chemicals are presently under development or are being tested. Available technology for this method may increase greatly within the next few years.

Another chemical dust suppressant method involves working the stabilization chemical into the roadbed to a depth of 5 to 15 cm (2 to 6 inches), but it has found limited application thus far for mining haul roads. Actual paving of haul roads with a bituminous material has also found limited application and is restricted economically to haul roads which are permanent. Savings in haul truck tire wear are reportedly achieved with paved haul roads, in addition to dust control.

Chemical stabilizers react with dry inactive tailings piles in the same manner they react with soils to form a wind-resistant crust or surface layer. Of 65 chemicals for which test results have been recorded, the resinous, polymer, ligninsulfonate, bituminous base, wax, tar, and pitch products have proven most successful in stabilizing mineral wastes.[29] Most of the chemicals have demonstrated a long-term effectiveness in this application. Application can be accomplished by truck, piping spray systems, or plane--400 hectares (1000 acres) of the inactive Kennecott copper

waste tailings to prevent air and water pollution. Radically different methods -- chemical, physical, and vegetative -- have been tested, often successfully, on inactive tailings piles. Well-operated active tailings ponds/piles should generally have a moist surface from new deposits and therefore be only marginally susceptible to wind erosion. However, if the tailings are allowed to dry before new moist tailings are added, emissions can be visible as large dust clouds, for example, some taconite ponds.

Chemical Stabilization - Several types of chemicals have been found effective in reducing dusting when applied on mining fugitive emission sources. These chemicals utilize different properties for dust suppression and are generally categorized by their composition -- bituminous, polymer, resin, enzymatic, emulsion, surface-active agent, ligninsulfonate, latex, etc. It is estimated that over 100 chemical products are presently marketed or are under development specifically as dust control agents.[22] With the wide range of characteristics available in commercial products, a chemical stabilizer can be selected with maximum efficiency for each control application. A partial listing of chemical dust suppressants is presented in Appendix B.*

Chemical stabilizers have been used to a limited extent to control dust from mining haul roads, storage piles, and inactive tailings piles.

Various chemicals may be added to the water or applied separately to the haul road surface to improve binding and reduce dusting. Application of a surface chemical treatment for dust suppression from haul roads is a relatively inexpensive control method as compared to paving of haul roads.

---

* Mention of company or product names is not to be considered as an endorsement of the U.S. Environmental Protection Agency.

sized, installed, and maintained, efficiencies approaching 95 percent can be expected.[27]

In addition, capital costs for a fabric filter system without wet suppression for stone crushing and screening operations of 180 Mg (200 ton), 270 Mg (300 ton), and 545 Mg (600 ton) per hour were estimated at $58,000, $100,000, and $148,000 respectively. Costs for the 180 Mg (200 ton) per hour operation were based on the utilization of one 2 m^3/sec (4,000 cfm) fabric filter and one 8 m^3/sec (16,000 cfm) fabric filter to control emissions. The 270 Mg (300 ton) per hour operation utilized one 4 m^3/sec (8,000 cfm) fabric filter and one 19 m^3/sec (40,000 cfm) fabric filter to control emissions. The 545 Mg (600 ton) operation utilized three fabric filters with flow rates of 4 m^3/sec (9,000 cfm), 15 m^3/sec (32,000 cfm), and 14 m^3/sec (31,000 cfm). Annual operating costs for the three plants were estimated at $12,000, $16,000, and $26,000, respectively. For the use of only a wet suppression system, capital cost of the system at each plant is estimated at $40,000, $44,000, and $52,000, respectively. Annual operating costs are estimated at $4,200, $5,500, and $8,700, respectively.[28]

Watering alone is seldomly used to suppress dust from overburden removal, storage, and waste disposal operations because of the vast area and quantities of material which must be covered and because of the logistics and related costs of supplying the required amounts of water to the remote areas in which these operations are usually located. Control of overburden removal dust emissions by watering is also hampered by the continuous exposure of dry material surfaces associated with this operation. Much research has been done by mining companies and the Bureau of Mines' Salt Lake City Metallurgy Research Center on the stabilization of

moisture. As a corollary to this, water is a scarce resource in these areas, and not readily available as a material for air pollution control.

Watering in the mining industry is primarily employed to control dust emissions from haul roads.[23,24,25,26] Watering can be used to control dust emissions from overburden removal, crushing, storage, and waste disposal, but its use for these operations is not widespread.

Haul roads at mines are routinely watered for dust suppression during all periods when water on the road surface does not create a safety hazard (generally when temperatures are above freezing). The water is usually applied by large tank trucks equipped with a pump and directional nozzles which spray the road surface and adjacent shoulders and berms. Fixed pipeline spray systems have also been used on main haul roads that are relatively permanent. At some western mines, runoff from haul roads is diverted to settling ponds placed at intervals along the roadway.

If the use of water can be tolerated, it can be sprayed at crusher and shaker screen locations to keep the material moist at all stages of processing.[24] The addition of water may, however, cause blinding of the finest size screens, thereby reducing their capacity.

Control system capital and operating costs were estimated for hypothetical stone crushing plants operating at 270, 540, and 910 Mg per hour (300, 600, and 1,000 tons per hour). The control systems utilized wet supression, fabric filters, or a combination of these two systems. Fixed capital expenditure for these dust abatement systems ranged from $49,129 to $249,162. Annual operating costs for the dust abatement systems ranged from $8,294 to $46,606 or 1 to 3.5 cents per Mg (0.9 to 3.2 cents per ton). If properly

Table 2-44 (continued). SUMMARY OF CONTROL EFFICIENCIES AND COSTS FOR MINING FUGITIVE PARTICULATE EMISSION SOURCES

Source	Control		Control cost	
	Applicate control method/comments	Estimated efficiency	Unit cost per application, $	Units
Waste disposal/ Tailing piles	Watering (sprinklers or trucks)/ Rarely practiced	50%[a]	no data	
	Chemical stabilization/ Limited practice	80%[d]	40-100 (160-400)[g] 65-150 (250-600)	$1000m^2$ (acre) $1000m^2$ (acre)
	Vegetation/Commonly practiced	65%[e]	50-115 (200-450)[h] (hydroseeding)	$1000m^2$ (acre)
	Combined chemical-vegetative stabilization/Rarely employed	90%[a]	25-40 (100-160)[i]	$1000m^2$ (acre)
	Slag cover/Limited practice	90-99%[a]	90-115 (350-450)[g]	$1000m^2$ (acre)

[a] Reference 1. Estimate based on observations made during mine visits and/or conversation with personnel associated with mining, both private and governmental.
[b] Reference 18.
[c] Reference 19.*
[d] Similar to efficiency determined in a study of chemical stabilization of construction area custs and fills.
[e] Calculated from wind erosion equation.
[f] Range of costs from survey of chemical suppliers. 1976.
[g] Reference 20.
[h] Reference 21.
[i] Reference 22.
[j] Reference 31.
[k] Reference 32.
[l] Reference 27 (capital cost).
[m] Reference 28 (capital cost).

* Mention of company or product names is not to be considered as an endorsement by the U.S. Environmental Protection Agency.

Table 2-44. SUMMARY OF CONTROL EFFICIENCIES AND COSTS FOR MINING FUGITIVE PARTICULATE EMISSION SOURCES

Source	Control		Control cost	
	Applicate control method/comments	Estimated efficiency	Unit cost per application, $	Units
Overburden removal	Watering/Rarely practiced	50%[a]	no data	
Drilling/Blasting	Watering, cyclones, or fabric filters for drilling/Employment of control equipment increasing	no data	no data	
	Mats for blasting/Very rarely employed			
Shovels/Truck ore loading	Watering/Rarely practiced.	50%[a]	no data	
Haul road truck transport	Watering/By far the most widely practiced of all mining fugitive dust control methods	50%[b]	no data	
	Surface treatment with penetration chemicals/Employment of this method increasing	50%[b]	600-1800[f] (1000-3000)	kilometer (mile)
	Paving/Limited practice	90-95%[a]	2390-6860[j,k] (2220-6370)	1,000 m^2 (10,000 ft^2)
Truck dumping	Watering/Rarely practiced	50%[a]	no data	
	Ventilated enclosure to control device/Rarely employed	85-90%[a]	no data	
Crushing	Adding water or dust suppressants to material to be crushed and venting to baghouse/Fairly commonly practiced	95%[a]		
Transfer/Conveying	Enclosed conveyors/Commonly employed	90-99%[a]	100-360[l,m] (90-330)	Mg/hr capacity (ton/hr capacity)
	Enclosure and exhausting of transfer points to fabric filter/Limited employment	85-99% (depends on control devices)		
Cleaning	Very little control needed since basically a wet process			
Storage	Continuous spray of chemical on material going to storage piles/ Rarely practiced	90%[c]	.05-1.50[f] (.10-3.25)	kilogram of chemical (pound)

soft, earthy, etc.) of the ore with those of the four subject ores; 2) selection of one or two of the four ores which is/are most similar; 3) determination of an appropriate emission factor based on comparative analysis and/or interpolation (if two ores are similar) with the emission factors listed in Table 2-43; and 4) the alteration of the appropriate emission factor to reflect local climatic conditions.

2.6.4 Emission Characteristics

Generally emissions from materials extraction and beneficiation operations would be the same chemically as the materials being mined. Of special concern are toxic minerals such as asbestos, beryllium, and silica. The size distribution of emissions is somewhat independent of the material, since only the fines (generally <100 μm) become airborne. Section 2.1 presents limited data on emission characteristics for unpaved roads.

2.6.5 Control Technology

Control technology options for the mining IPFPE sources are presented with related estimated efficiencies and costs in Table 2-44. With few exceptions, all of the fugitive dust controls identified in the literature and observed first hand during mining operation visits in this and previous studies, were applications of one or a combination of three basic techniques: watering, chemical stabilization, and reduction of surface wind speed across exposed sources.

Watering - Watering generally requires a low first cost, but provides the most temporary dust control. Depending on the nature of the dust-producing activity, water may be an effective dust suppressant for only a few hours or for several days. It should be pointed out that fugitive dust problems from mining are most prevalent in areas of the country with arid climates and lack of natural surface

mining and phosphate rock mining, and results from regrading of the spoils and wind erosion across the regraded surfaces. Haul roads are a major dust source at almost all mines, even though they are normally kept watered. The remaining operations generate dust through the handling or processing of the material being mined. Because of this, emission rates for most of them are highly dependent on the characteristics on the material as mined, i.e., moisture content, amount of fines, hardness.

Some of the operations create dust only in a few instances, such as copper, iron ore, or asbestos tailings as waste disposal sources, or air blowing as a cleaning process for coal. Waste disposal and cleaning operations generally are not significant fugitive dust sources at mines.

In order to estimate the fugitive dust emissions that stay suspended, an attempt has been made to express the emission factors in terms of the fraction less than 30 μm diameter wherever possible. Since data were not available to do this in all cases, some of the reported emission estimates may overstate the impact of those operations on a regional scale.

2.6.3 Inventory Techniques

Conducting a fugitive emission inventory for mining activities involves the application of appropriate emission factors to the pertinent parameters for each activity as delineated in Table 2-43. Inventorying procedures for transfer and conveying, loading and unloading, storage, haul road truck transport, and waste disposal sources are specifically discussed in Section 2.1.

An emission inventory for mining of an ore other than coal, copper, phosphate rock, and crushed rock can be made by sequentially: 1) comparing the characteristics (hard,

Table 2-43 (continued). IDENTIFICATION AND QUANTIFICATION OF POTENTIAL FUGITIVE PARTICULATE EMISSION POINTS FOR MATERIAL EXTRACTION AND BENEFICIATION

[a] Reference 3. Estimate for open pit copper mining from comparison with emission rate for an active construction area.

[b] Reference 1. pp. 25. Estimate for lignite mining from comparison with emission rates from similar fugitive dust sources, such as construction and aggregate handling.

[c] Reference 6. pp. 25. Estimate for western surface coal mining from comparison of published emission factor[9] for aggregate handling and storage.

[d] Reference 7. Estimate of total fugitive emissions at western surface coal mine, with overburden removal the predominant contributor.

[e] Reference 3. Estimate based on visual observation at open pit copper mine.

[f] Reference 8. Estimate for granite drilling of 0.0004 Kg/Mg (0.0008 lb/ton) and 0.08 Kg/MG (0.16 lb/ton) for granite blasting.

[g] Reference 8. Estimate for crushed granite plant.

[h] Reference 1. pp. 35.

[i] Reference 9. From sampling of crushed rock loading by front-end loaders.

[j] Reference 10. Based on an uncontrolled "dry" rate of 1.04 Kg/VKT (3.7 lb/VMT) and application of a climate correction of 0.44 (the fraction of days when the surface was not wet or frozen) and a control factor of 0.50 to account for watering of the roads on dry days.

[k] Reference 1. Based on EPA's published emission factor for unpaved roads[11], 166 days per year with no rain or snow cover, and 50% control by watering during dry days.

[l] Reference 8. For dumping granite into a primary crusher.

[m] Reference 11. For dumping of crushed rock onto storage piles.

[n] Reference 1. Estimated by reducing the EPA published emission factor for unloading crushed rock to account for the larger size of the coal and ore being handled and its higher moisutre content.

[o] Reference 12. Includes both stack and fugitive emissions, 80% of which falls out on plant property.

[p] Reference 13.

[q] References 1 and 14. Based on reported industry estimates of 0.075 Kg/MG (0.15 lb/ton) with 90% control.

[r] Reference 15. Proportioned from a total fugitive emission factor of 0.22 Kg/Mg (0.44 lb/ton) for western surface coal mines.

[s] Reference 8. Includes both stack emissions and fugitive emission at a granite quarry.

[t] Reference 12. Includes stack and fugitive emissions, 60% of which falls out on plant property.

[u] Reference 13.

[v] Estimates for dried tailings based on U.S. Dept. of Agriculture's wind erosion equation (see Section 2.1) and are a function of regional climatic conditions, assuming no surface crusting.

[w] Reference 16. For coal mines in the Southwest based on the average wind erosion rate.

[x] Reference 17.

[y] Reference 14. Based on sampling tests on coal storage piles; does not include loading and unloading emissions.

[z] Reference 14.

[aa] For further detail refer to Section 2.1.4.

Table 2-43. IDENTIFICATION AND QUANTIFICATION OF POTENTIAL FUGITIVE PARTICULATE EMISSION POINTS FOR MATERIAL EXTRACTION AND BENEFICIATION

Source of IPFPE	Range of uncontrolled fugitive emission factors	Emission factor reliability rating	Emission factors by industry Kg/Mg (lb/ton)			
			Coal	Copper	Rock	P_2O_5 Rock
1. Overburden removal	0.0004[a]-0.225[b] Kg/Mg (0.0008-0.45 lb/ton) of ore	E	0.025[b] (0.45)	0.0004[a] (0.0008)		
	0.024[c]-0.05[d] Kg/Mg (0.048-0.10 lb/ton) of overburden	E	0.024[c] (0.048)			
2. Drilling and blasting	0.0005[e]-0.08[f] Kg/Mg (0.001-0.16 lb/ton)	E		0.0005[e] (0.0010)		
3. Ore loading	negligible[g]-0.05 Kg/Mg[h] (0.10 lb/ton) of ore	E-C[i]	(0.05)[h] (0.10)		0.025[i] (0.05)	NA
4. Haul road truck transport	0.23[j]-0.62[k] Kg per vehicle-kilometer traveled (0.8-2.2 lb per vehicle mile traveled)	depends on speed and controls				
5. Truck dumping	0.00017[l]-0.02[m] Kg/Mg (0.00034-0.04 lb/ton) of ore	E	0.01[n] (0.02)	0.01[n] (0.02)	0.02[m] (0.04)	NA
6. Primary crushing	negligible-0.25 Kg/Mg[o] (0.5 lb/ton) of ore	E	(0.01)[p] (0.02)		0.25[o] (0.5)	
7. Transfer and Conveying	negligible-0.75[g] Kg/Mg (1.5 lb/ton) of ore	E	0.10[r] (0.20)			0.75[q] (1.5)
8. Secondary crushing/ Screening	0.022[s]-0.75[t] Kg/Mg (0.044-1.5 lb/ton) of ore	E	0.08[u] (0.16)		0.75[t] (1.5)	
9. Waste disposal	negligible-3.23[v] Mg/1000m^2/yr (14.4 ton/acre/yr)	E				
10. Storage[aa]	0.0118[w]-0.2[x] Kg/Mg (0.0235-0.42 lb/ton)	E,D[y]	0.027[y]	0.165[x]	0.165[x]	0.10[z]
	0.392[x]-1.48[x] Kg/1000m^2/day (3.5-13.2 lb/acre/day)		(0.054)	(0.33)	(0.33) 1.1b Kg/ 1000m^2/ day (10.4 lb/ acre/day)	(0.20)
11. Land reclamation	use wind erosion equation	depends on climate and soil				

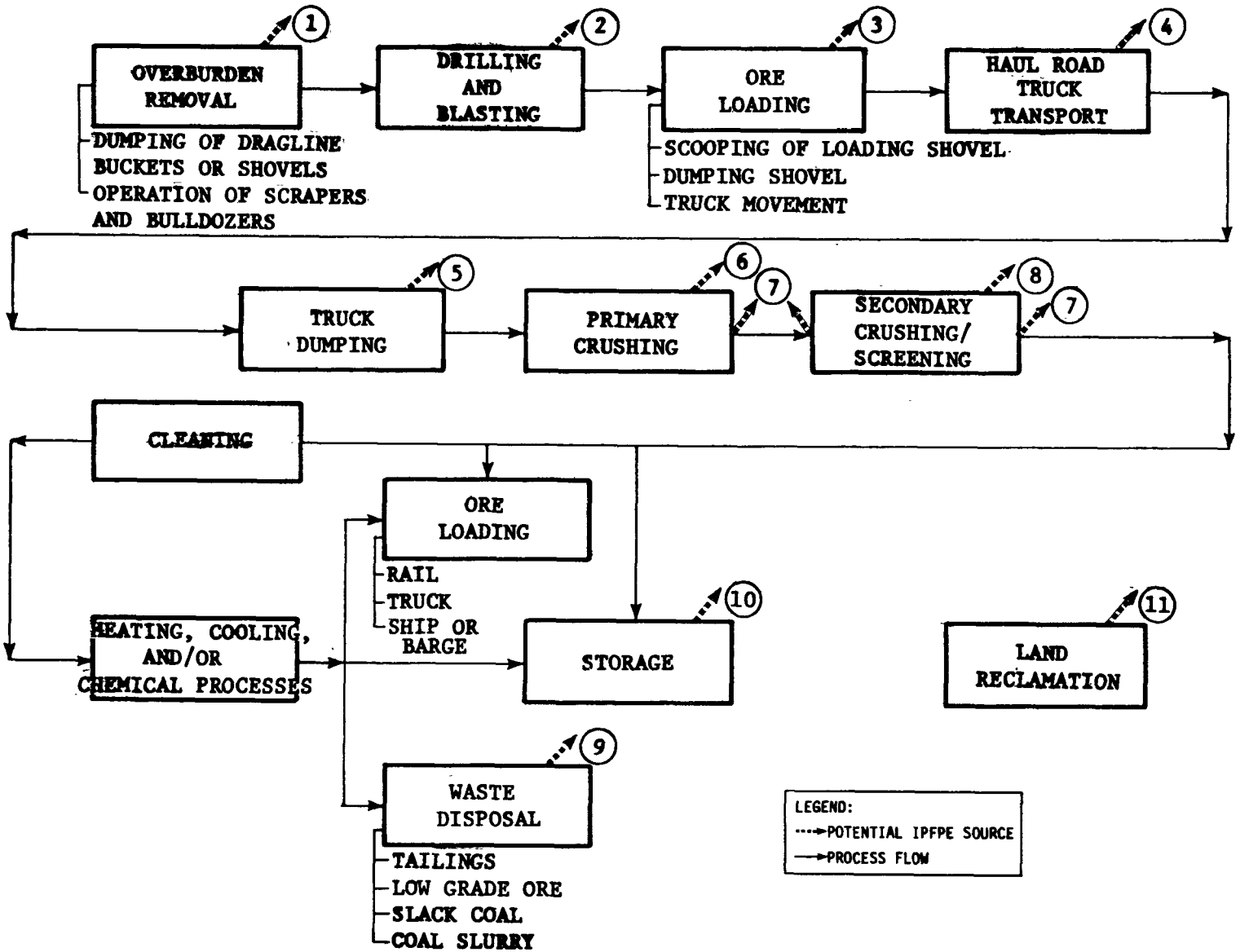

Figure 2-16. Process flow diagram for material extraction and beneficiation showing potential industrial process fugitive particulate emission points.

Area mine reclamation in Midwestern states poses the fewest reclamation problems. These lands can be returned to their original topography by spoil segregation, backfilling, and grading as deposits are removed. Compaction of the soil can be controlled with conventional equipment, and this ground preparation for revegetation is aided by a climate that provides sufficient annual precipitation.

Reclamation in the West is another matter. Here the seam thickness of deposits mined is much greater and the original elevation cannot be restored. If a pattern of continuous reclamation is used at these mines, the overburden is deposited by draglines parallel to the strip being mined; smaller draglines or bulldozers then level these deposits to reduce slopes. This returns the area to a topography that will meet proper conditions for land stability, drainage control, and maintenance of vegetation.

2.6.2 IPFPE Emission Rates

Figure 2-16 presents a process flow diagram of material extraction and benefication. Table 2-43 presents a summary of uncontrolled emission factors for material extraction and beneficiation IPFPE sources. Since these are potential uncontrolled emission rates, the site-specific level of control must be considered for application to a specific mine. Also included are reliability factors for each estimate. The estimates should be used only after reviewing the footnotes in Table 2-43 relevant to their development and applicability.

Overburden removal is much more of a dust problem at surface coal mines and phosphate rock mines than at copper mines and rock quarries because of the greater amounts of overburden material handled in the former mines. Fugitive dust from reclamation is also associated primarily with coal

emissions control during the interim. If the waste contains no potentially recoverable material and its toxic components do not create a leaching problem, it can be buried in the spoils for disposal.

Waste disposal operations are discussed in detail in Section 2.1.5.

Land Reclamation - All surface mining causes considerable alteration of the land on which it occurs and a certain amount of the surrounding area as well. Segregation of the various strata in overburden removal is critical so that inferior spoil can be buried under clean fill, with topsoil returned to the surface to ensure successful revegetation. In area strip mining, draglines fill mined strips with overburden removed from succeeding strips and topsoil is placed on top to prevent rehandling. In contour mining, the reclamation follows a pattern of grading and backfilling the bench between the highwall and the downslope. In this type of surface mining, the topsoil can be stockpiled for a limited time and replaced after the mining and grading have been completed. In contour mining by the block cut method, topsoil is removed and placed on graded areas in a single operation.

In Florida, area mining is practiced where phosphate rock is mined. Draglines strip overburden and fill the previous strip with this material in a single operation. The overburden is approximately 6 m (20 ft) deep, with phosphate deposits of some 5 m (16 ft) lying below. Land reclamation generally results in an area being filled and then graded to a level somewhat less than the original topography. Since the water table is comparatively close to the surface, this depression usually creates lakes but the process is completed and the area stabilized in one to two years.[5]

Cleaning has been included as a mining operation with potential for fugitive dust emissions mainly for completeness. At most mines, cleaning techniques are wet and thus there are no emissions associated with this operation.

Storage - This operation involves any open storage pile of the mined material that is located at the mine site, either prior to or after some initial processing. The storage piles may be short-term with a high turnover to accommodate irregular daily or weekly throughput rates for different sequential processes, or may provide a long-term reserve for emergency supplies or to meet cyclical seasonal transportation capabilities. Frequently, however, there is no stockpiling of material at the mine site because of the extra handling required.

Storage operations are described in detail in Section 2.1.4.

Waste Disposal - In the mining and beneficiation of minerals and ores, large amounts of waste material are often generated. Examples of this waste material are low grade ore, slack coal, extraneous unmarketable rock of relatively large size, tailings, coal slurry, and mud slime. The waste generally has the same handling characteristics as the raw material being mined, though often times they are in slurry form.

The waste disposal operation is distinguished from overburden disposal because in many cases the area used for wastes is not reclaimed. For these cases the wastes may be segregated and saved for future reprocessing for byproduct recovery, or because they contain higher concentrations of toxic materials than the overburden. The actual disposition of the waste will depend upon the potential value of further processing of the waste versus the cost of adequate fugitive

As the material is crushed, much more surface area is created. If the incoming material has a high internal moisture content (such as lignite coal), the new surfaces will be moist and nondusting. However, if the material has a low internal moisture content, the crushing greatly increases the potential for airborne dust generation. The new surfaces tend to dry out as the material continues through the process on conveyor belts and through the secondary crushers and screens. As the rock or coal becomes more finely ground and drier, the in-process dust releases become greater.

Transfer and Conveying - Although conveyor systems are used to transport material from the active mining area to the processing area or to deliver the process material to the consumer, conveying is most often found within the processing area--moving the crushed material to storage, a cleaning process, or the train or truck loading station. This operation also includes the loading of train cars or trucks and other transfer of the material, except for conveyors within the crushing or storage operations which are considered to be integral to these operations. Because of the large quantities that must be moved in mining, most of the transport systems are belt conveyors rather than screw, vibrating, or continuous-flow conveyors.

A detailed discussion of transfer and conveying operations is presented in Section 2.1.1.

Cleaning - Cleaning or beneficiation of the ore improves the quality of the mined material by separating undesired components at the mine site. This operation greatly reduces the amount of material which must be shipped to the processing plant and also decreases solids handling and disposal problems in all subsequent refining steps (or the combustion process in the case of coal).

trucks (which have poor close range visibility). Also the shovel, the deposit, and the power line for the shovel often block access from all but one direction.

Haul Roads - Haul roads, mostly temporary unpaved roads between the active mining areas, loading and unloading areas, waste disposal areas, and equipment service areas, are common to all surface mines. In a typical mine, these roads constitute about 10 percent of the total area directly disturbed by the mining. Because of the size of the trucks and crawler-mounted equipment that use these roads, they are normally constructed at least 12 m (40 ft) wide. In mines opened in recent years, particularly those in the West that use 90 to 180 Mg (100 to 200 ton) capacity trucks, the roads may be as wide as 30 m (100 ft).

Truck Dumping - Truck dumping is the simplest operation at the mine to describe--it involves only the dumping of the mined material from the truck into a tipple or receiving hopper for the primary crusher. The same operation may also occur at the edge of a spoils slope if the truck is dumping waste material or overburden. While the operation is quite simple, it has been identified as a significant fugitive dust source at many different mines.[3,4]

Crushing - The crushing operation is a fugitive dust source at both underground and surface mines. Primary crushers are often jaw or gyratory crushers, set to act upon rocks larger than about six inches and to pass smaller sizes. Depending on the ultimate size requirements of the product, the material from the primary crusher may be screened with the undersize going directly to the screening plant and the oversize to secondary crushing, or all material from primary crushing may be routed to the secondary crusher. The secondary crushers are of the cone, gyratory, or (sometimes) jaw type.

Normally, the explosive is a mixture of ammonium nitrate and fuel oil. Either dynamite or metalized mixtures such as ammonium nitrate and aluminum can be used when a more powerful explosive is required. Millisecond delays in the blasting sequence are programmed to maximize the breaking effect and to minimize seismic shock.

The frequency of blasting is rarely more than once per day and may be much less often. For reasons of safety and to minimize disruption of other mining activities, blasting is usually conducted between work shifts.

Ore Loading - In most surface mines, the ore or material being mined is loaded onto off-highway trucks for transport from the point where it is removed to a central transfer location or processing area at the mine site. The material can also be transported within the mine in a mechanical or hydraulic conveyor system, but this method is rarely used except in phosphate rock mining, where the deposit is usually pumped as a slurry through a pipeline to the processing area.

Any of the excavation equipment described in the section on overburden removal can be used to excavate the deposit and load it onto trucks. However, electric powered, crawler-mounted shovels are most often employed for this purpose because they can load the trucks more quickly. Front end loaders are used for smaller plants.

The area where the shovel is working is normally freshly exposed, so the material has almost the same moisture content as the unexposed deposit. However, the position where the trucks are loaded may dry rapidly as a result of the traffic movement. In order for watering trucks to gain access to truck loading areas, the water trucks may have to wait in line with the hauling trucks to avoid the danger of sporadic driving near the mining equipment or haul

Contour strip mining is employed in areas with slopes greater than about 15 degress. The overburden is removed from the slope to create a flat excavation, or bench, resulting in a vertical highwall on one side and a downslope pile of spoils on the other side. The exposed deposit is then mined and the land reclaimed by backfilling the previously worked area with newly removed overburden.

The third type of strip mining -- auger mining -- is usually done in conjunction with contour mining. The deposit exposed in the highwall by the contour method is mined by using large drills or augers to pull the deposit horizontally from the seam.

Drilling and Blasting - Drilling and blasting are done to fracture hard, consolidated material so it can be removed more easily and efficiently by the excavating equipment. Blasting may be needed for certain impenetrable overburden or for partings between the seams being mined, but more commonly to loosen the deposit itself. This operation is a routine part of open pit mining and quarrying; its use in surface coal mining is dependent on the depth and hardness of both the overburden and the coal bed; it is almost never required with phosphate rock mining.

The blastholes are drilled from the surface of the rock layer or deposit to the depth to which the deposit is to be broken. Shelves of 9 to 15 m (30 to 50 ft) depth are often used if a deposit of greater thickness is being mined. A flat bench is first prepared for the drilling rig, which is mounted on a tractor or truck. The holes are drilled in a predetermined pattern by an electrically-powered or compressor-powered rotary drill 10 to 38 cm (4 to 15 inches) in diameter. Larger holes (containing more explosives) are drilled for fracturing rock rather than for breaking coal.

2.6.1 Process Description

Overburden Removal - Overburden removal is an operation in almost all surface mining and entails removal of all topsoil, subsoil, and other strata overlying the deposit to be mined. Significant advances in methods of surface mining have occurred in recent years with the development of giant excavating and hauling equipment designed specifically for these operations.

For types of surface mining such as open pit, copper mining and stone quarrying, overburden removal may be only a one-time or occasional operation rather than continuous. For these types of mines, the deposit to be removed is of the same magnitude or larger than the overburden volume and the location of the mining activity is relatively fixed. Therefore, the overburden is removed permanently and may be transported off-site for disposal.

In excavating overburden, three kinds of equipment are used in typical surface mining operations:

- Draglines
- Shovels
- Small mobile tractors, including bulldozers, scrapers, and front-end loaders.

Most surface mining operations use these equipment items in varying combinations.

There are three major types of coal strip mining -- area, contour, and auger. Area strip mining is used where the terrain is relatively flat. Large-scale excavation equipment, usually draglines, remove the overburden material and deposit it in spoil banks in a trench left by the previous strip. Thus, only the initial strip produces waste overburden that must be disposed or stored for land reclamation.

Table 2-42. DUST-PRODUCING OPERATIONS BY MINING INDUSTRY[a]

Operation	Mining industry			
	Coal	Copper	Rock	P_2O_5 rock
Overburden removal	x	+	+	x
Blasting	+	x	x	o
Ore loading	x	x	x	o
Haul road truck transport	x	x	x	o
Truck or railcar dumping	+	x	x	o
Crushing and screening	x	x	x	o
Transfer and conveying	x	x	x	x
Cleaning	o	o	o	o
Storage	+	+	x	x
Waste disposal	+	x	o	+
Reclamation	x	o	+	x

x = usually a major source

+ = a minor or occasional source

o = usually not a dust source

[a] Reference 1.

2.6 MATERIALS EXTRACTION AND BENEFICIATION

The processing operations for materials extraction and beneficiation include those associated with the mining and subsequent prepartion of ores for commercial use. Operations which are potential sources of fugitive emissions include: overburden removal; drilling and blasting; ore loading; haul road truck transport; truck or railcar dumping; crushing (including dry grinding) and screening; transfer and conveying; cleaning; heating and cooling processes; storage; waste disposal; and land reclamation. Heating and cooling processes are not discussed in this section. However a discussion of heating and cooling processes at cement plants is included in Section 2.8 and is applicable to many heating and cooling processes.

Because of the wide variety of ores extracted and beneficiated and the corresponding variation in the nature of the operations involved, this section discusses three major ore classifications: hard ores (e.g. copper, stone, and lead); soft ores (e.g. coal and talc); and earthy (e.g. phosphate and diatomite). Specifically, four industries which are probably the largest mining sources of fugitive emissions nationally -- coal (soft), copper and crushed stone (hard), and phosphate rock (earthy) mining -- are presented as representatives of these three ore classifications. Process operations, fugitive emissions, and control technologies which are known to vary significantly by type of ore mined, are delineated for the four ores; conversely, a general description without specific reference to the four ores is provided in the many areas which are essentially the same.

Table 2-42 summarizes the operations which are dust sources within a particular mining industry.

9. Iversen, R.E. Meeting with U.S. Environmental Protection Agency with AISI on Steel Facility Emission Factors, April 14 and 15, 1976. U.S. Environmental Protection Agency Memorandum. June 7, 1976.

10. Maillard, Michael. Roof Ventilation Emission Study at a Foundry. Wayne County Department of Health, Air Pollution Control Division. Detroit. October 1976.

11. Kalika, P.W. Development of Procedures for Measurement of Fugitive Emissions. The Research Corporation of New England. Prepared for U.S. Environmental Protection Agency. Contract No. 68-02-1815. July 1975.

12. Scott, William D. and Charles E. Bates. Measurement of Iron Foundry Fugitive Emissions. Presented at Symposium on Fugitive Emissions: Measurement and Control. Hartford, Connecticut. May 18, 1976.

13. Systems Study for Control of Emissions, Primary Nonferrous Smelting Industry. Arthur G. McKee and Company. Prepared for National Air Pollution Control Administration, Division of Process Control Engineering. Contract PH 86-65-85. June 1969.

14. Air Pollution Engineering Manual, Second Edition. Danielson, J.A. (ed.). U.S. Environmental Protection Agency. Research Triangle Park, North Carolina. May 1973.

15. White, R.L., J.M. Hughes, and N.T. Stephens. Physico-Chemical Properties of Metal Furnace Fume Emissions. Paper Presented at the 69th Annual Meeting of the Air Pollution Control Association. Portland, Oregon. June 27-July 1, 1976.

16. Pewitt, Lawrence. Personal Communication. Texas Air Control Board to Robert Amick. PEDCo Environmental, Inc. October 6, 1976.

REFERENCES FOR SECTION 2.5

1. Greenberg, J.M., and R.E. Conover. Report on Systems Analysis of Emissions and Emission Control in the Iron Foundry Industry in the U.S.A. A.T. Kearney & Co., Inc. Chicago. December 1970.

2. Air Pollution Problems of the Foundry Industry. Informative Report No. 1. Committee T1-7. Ferrous Foundries. April 1961.

3. Bates, C.D., and L.D. Scneel. Processing Emissions and Occupational Health in the Ferrous Foundry Industry. American Industries Hygiene Association Journal. 35:452-462. August 1974.

4. Compilation of Air Pollutant Emission Factors. U.S. Environmental Protection Agency, Office of Air and Waste Management, Office of Air Quality Planning and Standards. Publication No. AP-42. Research Triangle Park, North Carolina. February 1976.

5. Open Dust Sources Around Iron and Steel Plants, Draft. Midwest Research Institute. Prepared for U.S. Environmental Protection Agency, Industrial Environmental Research Laboratory. Contract No. 68-02-2120. Research Triangle Park, North Carolina. November 2, 1976.

6. Particulate Pollutant System Study, Vol. III. Handbook of Emission Properties. Midwest Research Institute. Prepared for the U.S. Environmental Protection Agency, Air Pollution Control Office. Contract No. CPA 22-69-104. Durham, North Carolina. May 1971.

7. Gutow, B.S. An Inventory of Iron Foundry Emission. Modern Casting. January 1972.

8. Air Pollution Aspects of the Iron Foundry Industry. A.T. Kearney Company. Prepared for U.S. Environmental Protection Agency. PB 204 172. February 1971.

Medium energy wet collectors are best suited for moist sand preparation and handling. When dry sand conditions exist occasionally, cotton or wool fabric filters are used. Often some type of hood is used to capture emissions in sand conveyor systems especially at transfer points. As with many other processes, ductwork and exhaust fans are required in a complete collection system.[1]

(6) Adding magnesium vapor through a porous refractory plug in the bottom of the ladle. This method is smoke free but is complicated.

A side draft hood is often provided for the pouring area and side or bottom draft hood at the shakeout. The mold cooling conveyor between these two points is often fully hooded with sheet metal. Ducting is commonly provided from each area to a single control device, usually a wet scrubber.

Dusts from cleaning and finishing operations are controlled by local exhaust systems connected to dry mechanical collectors, or possibly cotton or wool fabric filters. Sometimes exhaust hoods are provided above the work stations. Other cleaning processes such as abrasive shot blasting and tumbling are commonly controlled with cotton or wool fabric filters or medium energy wet collectors. Applications of dry mechanical collectors are also made for abrasive cleaning processes. Chipping and grinding operations are normally provided with local exhaust hoods connected to either high efficiency centrifugal collectors or fabric filters.[1]

Efforts have been made to control certain coremaking effluents, but the gases emitted from bake ovens and shell core machines are a serious problem. Usually these gases are permitted to exhaust to the atmosphere through a ventilation system.[1] Also most core ovens are vented directly to the atmosphere through a stack. When operated below 200°C (400°F) and fired with natural gas, most core ovens do not require air pollution control equipment. However, excessive emissions from core ovens have been reduced to tolerable levels by modifying the composition of the core binders and lowering the baking temperature.[13]

In recent years, ductile iron innoculation stations have been equipped with collecting hoods, or have been installed in enclosed rooms, and the resultant gases have been drawn off by means of an exhaust fan, into a dust collection unit. Medium energy wet scrubbers, and fabric filters have been used for dust collection.[1]

Process improvements which have recently been developed to help prevent fugitive emission generation in iron foundries are as follows:

(1) The development of the "Inmold" process in which the magnesium alloy is added to a chamber in the mold cavity and the molten metal flows over the alloy during the pouring operation, dissolving the magnesium alloy as it passes through the chamber. This process is said to be smoke free.

(2) Development by International Nickel Company* of an alloy that contains about 95 percent nickel and 5 percent magnesium that is dense enough to sink when added to molten iron. This treatment is said to be smoke free.

(3) American Cast Iron Pipe Company's* method of impregnating coke with magnesium metal. This material reacts very slowly and is said to be smoke free when it is plunged to the bottom of a ladle of the iron to be treated.

(4) Immersing the magnesium alloy in the molten iron in the ladle by holding the alloy in a metal cup attached to a plunger in a dome-shaped ladle cover. The dome cover seals the top of the ladle, thus preventing almost all the fumes from escaping during treatment. A small amount of fume may escape during plunging and when the cover is removed.

(5) Placing the magnesium alloy in the bottom of the ladle, holding it down with scrap-metal punchings or molding sand, and pouring the iron over the alloy and its covering. If properly done, the magnesium reaction is delayed until the ladle is full, the reaction is slow, and no fumes escape.

---

* Mention of company or product names is not to be considered as an endorsement by the U.S. Environmental Protection Agency.

help alleviate fugitive emissions.[15] Cupolas having above charge takeoffs can maintain a strong in-draft through the charge door thereby eliminating the escape of fugitive emissions.

One large volume foundry using tilting type crucible furnaces installed a hooding system venting to a baghouse to control emissions during pouring. Since only one furnace operates at a time and the system operates only during the pour, only 0.71 m^3/sec (1,500 cfm) of air is required to collect the fumes.[12]

Typical control devices used for electric arc furnaces include a fixed hood together with a fabric filter. The design air volume required to ventilate an electric arc furnace with an integral hood is approximately 1.2 m^3/sec (2,500 cfm) per ton of charge.[1,12] Newer furnaces can utilize canopy hoods plus direct shell evacuation.[15]

Fugitive emissions from open hearth furnaces may be captured by hooding or enclosing the building, and venting the emissions to a fabric filter.

Emissions from pot furnaces are usually controlled by a baghouse. Hood design procedures are similar to electric induction furnaces.[13]

For newer reverberatory furnace installations, a canopy hood is usually used for capturing the emissions from charging. An ESP or a baghouse is used to collect the solids.[13]

Technically feasible methods for controlling fugitive dusts from all furnace operations include building evacuation or a system of hoods. Building evacuation would also capture emissions from other sources in a foundry such as casting shakeout, cooling, cleaning and finishing.

Table 2-41. CONTROL TECHNIQUES FOR FOUNDRY IPFPE SOURCES

Industry: Foundries	Negligible emissions	IPFPE source typically uncontrolled	FUGITIVE EMISSIONS CAPTURE AND CONTROL METHODS														
				Preventative procedures and operating changes							Capture methods				Removal equipment		
			Control technologies identified in Section 2.1	Wet suppression (water and/or chemical)	Confinement by enclosure	Better control of raw material quality	Better control of operating parameters and procedures	Improved maintenance and/or construction program	Increase exhaust rate of primary control system		Fixed hoods, curtains, partitions, covers, etc.	Movable hoods with flexible ducts	Closed buildings with evacuation		Fabric filter	Scrubber	Cyclone
1. Raw material receiving and storage			✓														
2. Cupola furnace operation		✓							+		+	+	+		+	+	
3. Crucible furnace operation											x		+		x		
4. Electric arc furnace operation											x	o	+		x		
5. Open hearth furnace operation											+	+	+		+		
6. Electric induction furnace operation											x		+		x		
7. Pot furnace operation											x	o	+		x		
8. Reverberatory furnace operation											x[a]		+		x		
9. Ductile iron innoculation											x[a]		x[a]		x	x	
10. Pouring molten metal into molds											x	o	+		+	x	
11. Casting shakeout											x	+	+		+	x	
12. Cooling and cleaning castings											x		+		x		x
13. Finishing castings											x				x		x
14. Core sand and core binder receiving and storage													o				
15. Core sand and binder mixing											+				+		
16. Core making		✓									+				+		
17. Core baking		✓				o	o				+					+	
18. Mold sand and binder receiving and storage												o			o	o	
19. Sand preparation												o			o	o	
20. Mold making												o			o	o	

x Typical control technique.

o In use (but not typical) control technique.

+ Technically feasible control technique.

[a] Typical for newer installations. For ductile iron innoculation evacuation is more of a local type evacuation rather than entire building evacuation.

Much of the information on characteristics is for the stack (non-fugitive) emissions. Cupola dust is a very heterogeneous mixture; silica content is high, particularly in the 0-10 μm fraction. Of the metal portion, 60 percent are oxides of silicon and iron. Significant zinc and lead oxides are also found. Other elements found in the particulates include manganese, chromium, tin, titanium, molybdenum, zirconium, nickel, copper, cobalt and silver.[6]

Fumes from electric arc furnaces have been reported to be extremely fine, from several sources which indicate that 90 to 95 percent of the fumes are below 0.5 μm in size.[3] Another source indicates that 75 percent of the particulates are less than 5 μm in diameter with a mass median diameter between 2.27 and 2.33 μm.[15] The emissions consist almost entirely of oxides of various metals charged, as well as the furnace refractories and any fluxing materials which were used. Iron oxides form the major constituent.[3]

Test results for an open-hearth furnace show that 64.7 percent of the emissions are below 5 μm in size.[12]

2.5.5 Control Technology

Control technology options for IPFPE in foundry operations with the exception of those discussed in Section 2.1 are presented in Table 2-41. This section discusses the fugitive emission sources and their related control techniques.

Charging and tapping emissions from the cupola may be controlled by hooding the charging and tapping areas and venting the system to fabric filters. Another system that may be used is enclosing the building with subsequent evacuation and venting to a fabric filter. Preventative measures such as properly sizing the primary control system to maintain continuous draft through the charging door will

Table 2-40. EMISSION CHARACTERISTICS FOR VARIOUS FOUNDRY OPERATIONS [1]

Foundry operation	Type	Particle size (μm)
Raw material storage and charge makeup	Coke dust	Fine to coarse
	Limestone and sand dust	30 to 1,000
Melting		
Cupola furnace	Fly ash	8 to 20
	Coke breeze	Fine to coarse
	Metallic oxides	up to 0.7
Electric furnace	Metallic oxides	up to 0.7
Reverberatory furnace	Metallic oxides	up to 0.7
	Fly ash	8 to 20
Inoculation	Metal oxides	up to 0.7
Molding	Sand	Coarse
Pouring	Metallic oxides	Fine to medium
Shakeout	Sand fines, dust	50% - 2 to 15
Cleaning	Dust	50% - 2 to 15
Grinding	Metal dust	above 7
	Sand fines	Fine to medium
	Abrasives	50% - 2 to 7
Sand storage	Fines	50% - 2 to 15
Sand handling	Fines	50% - 2 to 15
Screening, mixing	Fines	50% - 2 to 15
Sand drying and reclamation	Dust	50% - 2 to 15
Core sand storage	Sand fines	Fine
Core making	Sand fines, dust	Fine to medium

2.5.3 Example Plant Inventory

The example plant inventory for foundries as shown in Table 2-39 presents potential fugitive particulate emissions from the various processes within a gray iron foundry. The inventory represents a plant which produces 13,490 Mg (14,840 tons) per year of iron castings. The plant inventory is not meant to display a typical plant, but merely a potential set of circumstances.

It is assumed that a cupola furnace is used to melt the raw materials. Other assumptions used to build up the plant inventory are as follows:

- Melting rate of cupola is 6 Mg (7 tons) per hour.
- The cupola operates 10 hours per day 212 days per year.
- Annual production of iron castings is 13,490 Mg (14,840 tons).
- Raw material requirements are iron - 14,165 Mg (15,582 tons), coke - 1,818 Mg (2,000 tons), limestone - 206 Mg (226 tons).

Total model plant uncontrolled process fugitive particulate emissions are 147 Mg (162 tons) per year.

2.5.4 Characteristics of Fugitive Emissions

The composition and particle size of dusts from various foundry operations will vary considerably. For example, dusts from a casting shakeout are mostly very fine carbonaceous material. On the other hand, dust from the grinding of castings includes coarse freshly fractured particles, along with elemental iron, iron oxide, and sand particles. The plume from furnaces melting brass or bronze alloys is white and of the order of less than 0.5 μm in diameter. Table 2-40 shows the characteristics and sources of emissions in various foundry operations.

Table 2-39 (continued). IDENTIFICATION AND QUANTIFICATION OF POTENTIAL FUGITIVE PARTICULATE EMISSION POINTS FOR FOUNDRIES

Source of IPFPE	Uncontrolled fugitive emission factor	Emission factor reliability rating	Model plant fugitive emission inventory	
			Operating parameter, Mg/yr (tons/year)	Uncontrolled emissions Mg/yr (tons/yr)
17. Core baking	0.015-2.7 kg/Mg of cores[m,p] (0.03-5.4 lb/ton of cores)	E	Cores[o] 2,698 (2,968)	4 (4)
18. Mold sand and binder receiving and storage	Sand unloading 0.015 kg/Mg sand[n] (0.03 lb/ton sand)	E	Sand 2,600 (2,860)	1 (1)
19. Sand preparation	0.67 kg/Mg iron castings[f] (1.3 lb/ton iron castings)	E	Iron castings 13,490 (14,840)	9 (10)
20. Mold makeup	0.02 kg/Mg iron castings[m] (0.04 lb/ton iron castings)	E	Iron castings 13,490 (14,840)	1 (1)

[a] Coke unloading emission factor based on the coal unloading emission factor presented in Section 2.1.2.

[b] For complete development of the storage emission factor refer to Section 2.1.4. For source 1b it was assumed that $S = 1.0$, $D = 90$, $K_1 = 0.85$, $K_2 = 0.40$, and $K_3 = 0.93$. Reference 5.

[c] Reference 4. (Approximately 5% of uncontrolled emissions.)

[d] Engineering judgment, assume 5% of uncontrolled emissions as reported in Reference 4, p. 7.8-1 and 7.9-2.

[e] Reference 6.

[f] Reference 7.

[g] Reference 8.

[h] Reference 9.

[i] Limited test data from Reference 10, indicate that emissions from electric induction furnace range from 0.15 to 0.3 kg/Mg (0.3 to 0.6 lb/ton) iron poured. These emissions include melting, pouring and innoculation.

[j] Engineering judgment, assume 50% of uncontrolled emissions as reported in Reference 4, p. 7.11-2.

[k] Reference 11.

[l] Reference 13.

[m] Reference 12.

[n] Sand unloading emission factor assumed to be of the same magnitude as the taconite pellets unloading emission factor as presented in Section 2.1.2. Emissions from storage is estimated to be negligible since the sand is normally stored indoors.

[o] Assume that 20% of the weight of castings equals the weight of cores.

[p] Engineering judgment, assume all uncontrolled emissions as reported in Reference 14, are fugitive.

Table 2-39 (continued). IDENTIFICATION AND QUANTIFICATION OF POTENTIAL FUGITIVE PARTICULATE EMISSION POINTS FOR FOUNDRIES

Source of IPFPE	Uncontrolled fugitive emission factor	Emission factor reliability rating	Model plant fugitive emission inventory	
			Operating parameter, Mg/yr (tons/year)	Uncontrolled emissions Mg/yr (tons/yr)
10. Pouring molten metal into molds	0.05-2.07 kg/Mg in gray iron foundry[i,k,f] (0.1-4.13 lb/ton in gray iron foundry)	D	Iron castings 13,490 (14,840)	16 (17)
	1.26 kg/Mg for copper[l] (2.52 lb/ton for copper)	E		
	0.47 kg/Mg for lead[l] (0.93 lb/ton for lead)	E		
11. Casting shakeout	0.6-6.4 kg/Mg of iron[f,m] (1.2-12.8 lb/ton of iron)	E	Iron castings 13,490 (14,840)	47 (52)
12. Cooling and cleaning castings	cooling 0.08-0.4 kg/Mg iron castings[f,m] (0.16-0.8 lb/ton iron castings)	D	Iron castings 13,490 (14,840)	3 (4)
13. Finishing castings	0.005 kg/Mg iron castings[m] (0.01 lb/ton iron castings)	E	Iron castings 13,490 (14,840)	1 (1)
14. Core sand and core binder receiving and storage	Sand unloading 0.015 kg/Mg sand[n] (0.03 lb/ton sand)	E	Sand 2,600 (2,860)	1 (1)
15. Core sand and binder mixing	0.15 kg/Mg of sand[e] (0.3 lb/ton of sand)	E	Iron castings 13,490 (14,840)	30 (33)
	0.38-4.12 kg/Mg of iron[f,m] (0.75-8.24 lb/ton of iron)	E		
16. Core making	0.18 kg/Mg of cores[e] (0.35 lb/ton of cores)	E	Cores[o] 2,698 (2,968)	1 (1)

Table 2-39 (continued). IDENTIFICATION AND QUANTIFICATION OF POTENTIAL FUGITIVE PARTICULATE EMISSION POINTS FOR FOUNDRIES

Source of IPFPE	Uncontrolled fugitive emission factor	Emission factor reliability rating	Model plant fugitive emission inventory	
			Operating parameter, Mg/yr (tons/year)	Uncontrolled emissions Mg/yr (tons/yr)
2. Cupola furnace operation (charging, tapping, etc.)	0.05-1 kg/Mg iron[c] (0.1-2 lb/ton iron)	E	Iron castings 13,490 (14,840)	7
3. Crucible furnace operation (charging, tapping, etc.)	0.05-0.3 kg/Mg of metal processed[d] (0.1-0.6 lb/ton of metal processed)	E		
4. Electric arc furnace operation	2.5-5 kg/Mg of metal charged[e] (5.0-10 lb/ton of metal charged) 0.53-1.74 kg/Mg of steel[f,g] (1.05-3.48 lb/ton of steel)	E E		
5. Open hearth furnace operation	0.05-0.45 kg/Mg of metal charged[c,h] (0.1-0.9 lb/ton of metal charged)	E		
6. Electric induction furnace operation[i]	1.0 kg/Mg of metal charged[e] (2.0 lb/ton of metal charged) 0.75 kg/Mg of iron[c] (1.5 lb/ton of iron)	E E		
7. Pot furnace operation	0.2 kg/Mg[j] (0.4 lb/ton)	E		
8. Reverberatory furnace operation	4.15-4.35 kg/Mg of copper[c] (8.3-8.7 lb/ton of copper)	E		
9. Ductile iron innoculation	1.65-2.3 kg/Mg of iron[f,g,i] (3.3-4.5 lb/ton of iron)	D	Iron castings 13,490 (14,840)	26 (29)

Table 2-39. IDENTIFICATION AND QUANTIFICATION OF POTENTIAL FUGITIVE PARTICULATE EMISSION POINTS FOR FOUNDRIES

Source of IPFPE	Uncontrolled fugitive emission factor	Emission factor reliability rating	Model plant fugitive emission inventory	
			Operating parameter, Mg/yr (tons/year)	Uncontrolled emissions Mg/yr (tons/yr)
1. Raw material receiving and storage				
1a Unloading	Coke unloading 0.2 kg/Mg coke[a] (0.4 lb/ton coke)	E	Coke 1,818 (2,000)	1 (1)
1b Storage				
Loading onto pile	$\frac{(0.02)(K_1)(S/1.5)}{(PE/100)^2}$ kg/Mg material onto pile[b]	D	Coke loaded 1,818 (2,000)	negligible
	$\left(\frac{(0.04)(K_1)(S/1.5)}{(PE/100)^2}\right.$ lb/ton material loaded onto pile$\left.\right)$			
Vehicular traffic	$\frac{(0.065)(K_2)(S/1.5)}{(PE/100)^2}$ kg/Mg material stored[b]	D	Coke stored 1,818 (2,000)	negligible
	$\left(\frac{(0.13)(K_2)(S/1.5)}{(PE/100)^2}\right.$ lb/ton material stored$\left.\right)$			
Loading out	$\frac{(0.025)(K_3)(S/1.5)}{(PE/100)^2}$ kg/Mg material loaded out[b]	D	Coke loaded out 1,818 (2,000)	negligible
	$\left(\frac{(0.05)(K_3)(S/1.5)}{(PE/100)^2}\right.$ lb/ton material loaded out$\left.\right)$			
Wind erosion	$\frac{(0.055)(S/1.5)}{(PE/100)^2}\frac{D}{90}$ kg/Mg material stored[b]	D	Coke stored 1,818 (2,000)	negligible
	$\left(\frac{(0.11)(S/1.5)}{(PE/100)^2}\frac{D}{90}\right.$ lb/ton material stored$\left.\right)$			

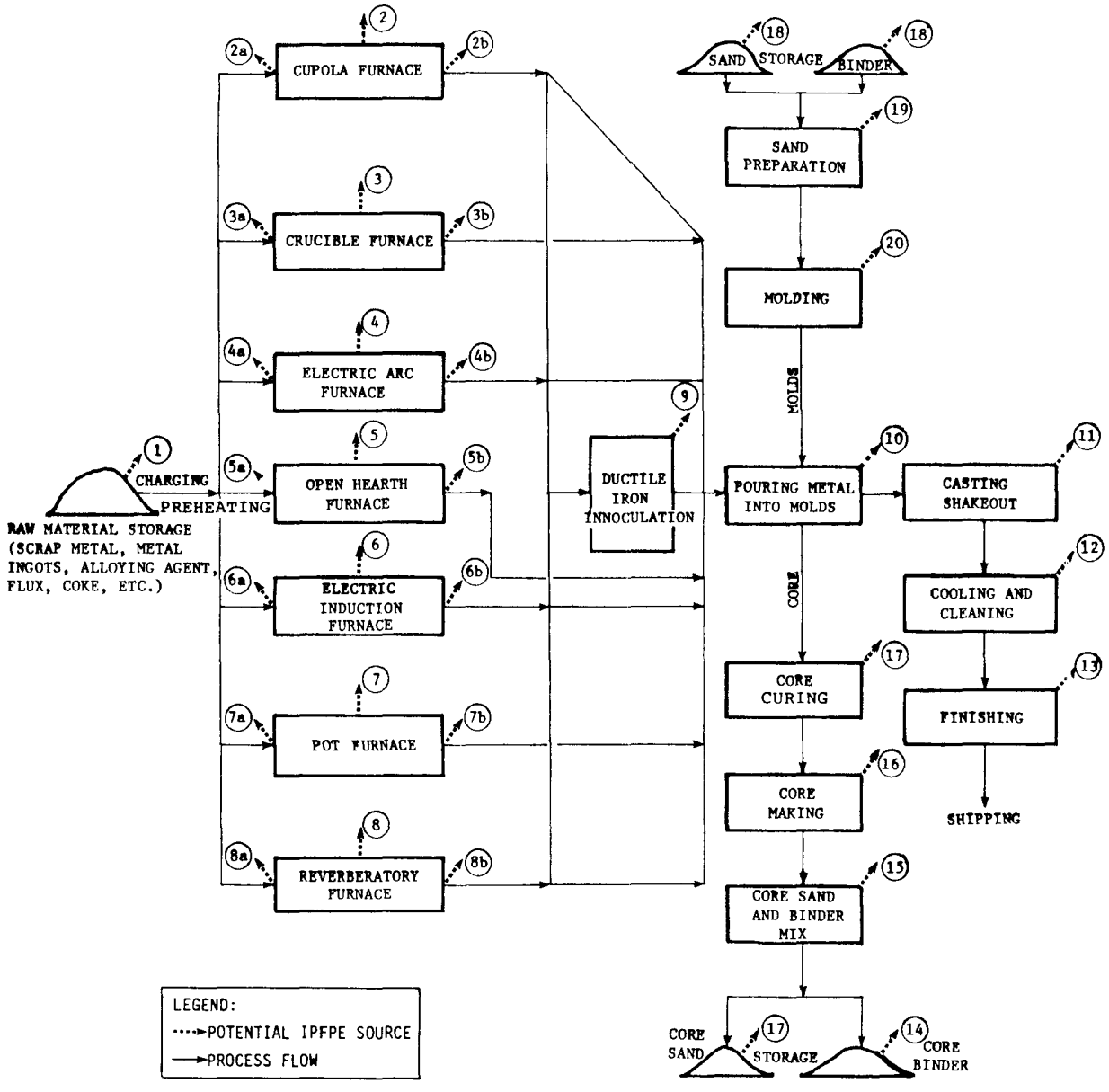

Figure 2-15. Process flow diagram for foundries showing potential industrial process fugitive particulate emission points.

Cores are usually made of sand and binders and are placed into the mold. When two or more core sections are required to form the internal cavity, the core sections may be pasted together prior to placing them in the open mold. Silicate, resin, oil and cereal binders are used to make the core strong. After the cores are formed, they may be baked in ovens.

Figure 2-15 shows a process flow diagram for a foundry operation. Each potential process fugitive emission point is identified and explained in Table 2-39.

2.5.2 IPFPE Emission Rates

Table 2-39 presents a summary of uncontrolled emission factors for foundry IPFPE sources. Since these are potential uncontrolled emission rates, the site-specific level of control must be considered for application to a specific plant. Also included are reliability factors for each estimate.

The emission factors with an "E" rating are at best order of magnitude estimates; consequently, actual emission rates of a given facility could differ significantly from those in Table 2-39. The largest potential sources of uncontrolled fugitive emissions in foundry operations include the various types of furnaces, especially the cupola in gray iron foundries.

Note that in the case of the electric arc and the open hearth furnace, the total emissions shown in Table 2-39 specifically include charging and tapping emissions. In all other furnace operations, charging and tapping emissions are not specifically mentioned but are included in the total furnace fugitive emission factor.

The major operations that take place in order to produce castings are:

- Core making
- Mold making
- Melting of raw material
- Pouring of the molten metal into molds
- Shakeout of castings
- Cooling, cleaning, and finishing

The cupola furnace is charged with coke, metallics and fluxes through a charging door in the upper section of the cupola. Combustion is produced by blowing room temperature or preheated air through the tuyeres at the bottom of the furnace. Typical gray cast iron will begin to melt at 1238°C (2260°F). The temperature of the charge is raised to about 1650°C (3000°F) and the molten metal drops to the bottom of the furnace where it is tapped out to a holding ladle. The slag formed on the top of the molten metal is tapped at the front or rear of the furnace depending upon individual practice. The molten metal is transferred from a holding ladle to a pouring ladle and is then poured into prepared molds, which may be set out on the floor or pass by a pouring station on a conveyor.

After the molten metal has solidified in the mold, the hot casting is separated from the sand on a heavy duty vibrating screen or sometimes manually. After separation, the sand is usually recycled. Castings are air cooled and then cleaned in abrasive blast machines.

Molds may be made of silica sand mixed with water and binder. After mixing, the mix is transferred to the molding area where it is packed either mechanically or by hand into the flask over the pattern. The pattern is next withdrawn from the mold leaving the cavity. After placing the proper cores in a mold, the mold is closed and ready for pouring. After casting, when the metal has solidified, the mold is shaken out.

2.5 FOUNDRIES

2.5.1 Process Description[1,2,3]

Foundries produce castings by melting either ingots or scrap metal in a furnace, and pouring the metal into molds. Table 2-38 shows the various types of furnaces used to melt metal in a foundry operation.

Table 2-38. TYPES OF FURNACES USED TO CHARGE METALS IN A FOUNDRY OPERATION

Metal	Furnace type						
	Crucible	Electric induction	Reverberation	Cupola	Electric arc	Open hearth	Pot
Aluminum	x	x					
Brass/Bronze	x	x	x				
Gray Iron		x	x	x	x		
Steel		x			x	x	
Zinc	x	x					
Copper	x	x	x				
Lead							x

Basically all foundries use similar processes, regardless of starting material. Since iron and steel foundries account for about 90 percent of tonnages produced by all foundries in the United States, a brief description of the gray iron foundry operation is given here. Except for the furnace type, the operation is very similar for all foundries. Gray iron foundries produce a heavy metal commonly called cast iron. Gray iron foundries commonly use cupola melting furnaces to produce molten metal.

REFERENCES FOR SECTION 2.4.4

1. Multimedia Environmental Assessment of the Secondary Nonferrous Metal Industry, Volume II: Industry Profile. Radian Corporation. Contract No. 68-02-1319, Task Order No. 49. Austin, Texas. June 21, 1976.

2. Particulate Pollutant System Study, Volume III - Handbook of Emission Properties. Midwest Research Institute. Contract No. CPA 22-69-104. Kansas City, Missouri. May 1, 1971.

3. Compilation of Air Pollutant Emission Factors, Second Edition. U.S. Environmental Protection Agency, Office of Air and Water Programs, Office of Air Quality Planning and Standards. Publication No. AP-42. Research Triangle Park, North Carolina. April 1973.

4. Air Pollution Aspects of Brass and Bronze Smelting and Refining Industry. U.S. Department of Health, Education, and Welfare, Public Health Service. Raliegh, North Carolina. November 1969.

5. Observations made during a plant tour of the W.V. Bullock, Inc. facilities in Birmingham, Alabama. September 29, 1976.

over the tapping area, several measures can be taken to help capture emissions escaping the hood. Increasing hood exhaust rate may increase capture efficiency. Reconstruction of the hood to allow for enlargement of capture surface or installation of side curtains, will increase capture efficiency and may be done at a lower cost than a completely new hooding system. The use of curtains to help direct fugitive emissions into the hooding system has also been observed to an effective means of fugitive emission control.[5] If hooding systems are to be installed for fugitive emission control, space limitations as well as operating procedures will dictate whether fixed or movable hoods are desirable. If the use of hoods is not possible, then building evacuation will effectively control the fugitive emissions.

Charging operations can be a major source of fugitive emissions. As a result, fixed or movable hoods placed over the charging area are required to capture the fugitive emissions. In addition, curtains which help direct fugitive emissions into the hood will increase capture efficiencies.[5] A cost of $55,000 for hooding a brass/bronze operation, excluding removal equipment, has been reported.[5]

Fugitive emissions from ingot casting can also be controlled by several means. The use of mold release compounds which do not contain oils or volatiles will help prevent the generation of fugitive emissions. Casting at lowest possible temperatures will also help alleviate the problem. Depending on space limitations a fixed or movable hood over the casting area can control fugitive emissions. Again, curtains can be an aid in directing emissions into the hood.[5] Building evacuation is also an alternative in controlling fugitive emissions.

Table 2-37. CONTROL TECHNIQUES FOR SECONDARY COPPER, BRASS/BRONZE PRODUCTION IPFPE SOURCES

Industry: Secondary Copper, Brass/Bronze Production	Negligible emissions	IPFPE source typically uncontrolled	FUGITIVE EMISSIONS CAPTURE AND CONTROL METHODS														
			Control technologies identified in Section 2.1	Preventative procedures and operating changes							Capture methods				Removal equipment		
				Wet suppression (water and/or chemical)	Confinement by enclosure	Better control of raw material quality	Better control of operating parameters and procedures	Improved maintenance and/or construction program	Increase exhaust rate of primary control system		Fixed hoods, curtains, partitions, covers, etc.	Movable hoods with flexible ducts	Closed buildings with evacuation		Fabric filter	Scrubber	ESP
1. Sweating furnace																	
1a. Charging								+	+		o	+	+		o		
1b. Tapping							o	+	+		o	+	+		o		
2. Drying																	
2a. Charging											+	+	+		+		
2b. Discharging											+	+	+		+		
3. Insulation burning									+								
4. Electric induction furnace																	
4a. Charging											o	+	+		o		
4b. Tapping							o	+	+		o	+	+		o		
5. Reverberatory furnace																	
5a. Charging											o	+	+		o		
5b. Tapping							o	+	+		o	+	+		o		
6. Rotary furnace																	
6a. Charging											o	+	+		o		
6b. Tapping							o	+	+		o	+	+		o		
7. Crucible furnace																	
7a. Charging											o	+	+		o		
7b. Tapping							o	+	+		o	+	+		o		
8. Cupola (blast) furnace																	
8a. Charging											o	+	+		o		
8b. Tapping							o	+	+		o	+	+		o		
9. Casting							o				o	+	+		o		

x Typical control technique.

o In use (but not typical) control technique.

+ Technically feasible control technique.

Fugitive emissions from plant haul roads were not included in the inventory and are expected to be minimal at secondary facilities. Total model plant uncontrolled process fugitive particulate emissions are 354 Mg (389 tons) per year. Major sources of fugitive emissions include insulation burning, reverberatory furnace, and rotary furnace.

Characterization of Fugitive Emissions - Information concerning the characterization of fugitive particulate emissions from secondary brass, bronze, and copper was not found in the literature. The limited data available for stack emission characteristics are presented below since they may closely resemble characteristics of the fugitive emissions. A chemical analysis of dust collected by a brass and bronze smelter baghouse resulted in the following:[4]

Component	Particulate composition, percent by weight
Zinc	45.0-77.0
Lead	1.0-12.0
Tin	0.3-2.0
Copper	0.05-1.0
Chlorine	0.5-1.5
Sulfur	0.1-0.7

Zinc and other fumes are 0.03 to 0.5 μm in diameter.[4]

Control Technology - Control technology options for secondary copper, brass, and bronze production IPFPE sources are presented in Table 2-37 and are explained in more detail below.

Better control of operation parameters and procedures such as tapping at lowest possible melt temperature will often help control fugitive emissions from the various furnace tapping operations. If hoods are already in use

IPFPE Emission Rates - Very little data concerning process fugitive particulate emission factors for the secondary copper, brass, and bronze industry have been found in the literature. Therefore, emission rates as presented in Table 2-36 resulted for the most part from engineering judgements utilizing point source emission factors for the various operations identified. It was estimated that fugitive emissions were equal to 5 percent of an operation's stack emissions. These values, therefore, received a reliability rating of "E" which indicates at best an order of magnitude estimate. Consequently, actual emission rates at a given facility could differ significantly from those in Table 2-36.

Example Plant Inventory - The example plant inventory for secondary brass, bronze, and copper production as shown in Table 2-36 presents potential fugitive particulate emission quantities for the various uncontrolled sources within the process. The inventory represents a plant which produces 30,000 Mg (33,000 tons) of metal per year. Because of the various types of furnaces that can be employed, the inventory includes only reverberatory, rotary, and cupola furnaces. Insulation burning and sweating are used as pretreatment methods prior to charging to melting furnaces. The plant inventory is not meant to display a typical plant, but merely a potential set of operations.

The assumed annual feed rate of scrap, flux, and coke for the various pretreatment and furnace operations was as follows:

Insulation burning	38,462 Mg (42,308 tons) scrap
Sweat furnace	19,789 Mg (21,768 tons) scrap
Charge to furnaces	39,842 Mg (43,827 tons) treated scrap
Flux and alloys	500 Mg (550 tons)
Coke	1,572 Mg (1,729 tons)

Table 2-36 (continued). IDENTIFICATION AND QUANTIFICATION OF POTENTIAL FUGITIVE PARTICULATE EMISSION POINTS FOR SECONDARY COPPER, BRASS/BRONZE PRODUCTION

Source of IPFPE	Uncontrolled fugitive emission factor	Emission factor reliability rating	Model plant fugitive emission inventory	
			Operating parameter, Mg/yr (tons/year)	Uncontrolled emissions Mg/yr (tons/yr)

[a] Engineering judgement assuming that fugitive emissions are equal to 5 percent of stack emission factor given in Reference 1.

[b] Emissions included in total for source 1.

[c] Emissions included in total for source 2.

[d] Engineering judgement assuming that fugitive emissions are equal to 5 percent of stack emission factor given in Reference 2.

[e] Engineering judgement assuming that fugitive emissions are equal to 5 percent of stack emission factors given in References 2 and 3.

[f] Emissions included in total for source 4.

[g] Engineering judgement assuming that fugitive emissions are equal to 5 percent of stack emission data given in Reference 4.

[h] Emissions for tapping and charging also included in as part of the emission factor given for total (source 5).

[i] Emissions for tapping and charging also included in as part of the emission factor given for total (source 6).

[j] Emissions for charging and tapping included in total for source 7.

[k] Engineering judgement assuming that fugitive emissions are equal to 5 percent of the stack emission factor and data given in References 3 and 4.

[l] Emission for charging and tapping included total for source 8.

[m] Engineering judgement assuming fugitive emissions for zinc casting given in Section 2.4.3 to be equal to those for copper, brass, and bronze.

[n] Not included in emission inventory.

Table 2-36 (continued). IDENTIFICATION AND QUANTIFICATION OF POTENTIAL FUGITIVE PARTICULATE EMISSION POINTS FOR SECONDARY COPPER, BRASS/BRONZE PRODUCTION

Source of IPFPE	Uncontrolled fugitive emission factor	Emission factor reliability rating	Model plant fugitive emission inventory	
			Operating parameter, Mg/yr (tons/year)	Uncontrolled emissions Mg/yr (tons/yr)
6. Rotary furnace (total)	0.75-3.68 kg/Mg charged[g] (1.5-7.35 lb/ton charged)	E	Material charged 13,700 (15,070)	30 (33)
6a. Charging	0.3 kg/Mg charged[g,i] (0.59 lb/ton charged)	E	Material charged 13,700 (15,070)	4[i] (4)
6b. Tapping	0.015-0.045 kg/Mg charged[g,i] (0.03-0.09 lb/ton charged)	E	Material charged 13,700 (15,070)	0.4[i] (0.4)
7. Crucible furnace (total)	0.16-0.32 kg/Mg charged[e] (0.32-0.64 lb/ton charged)	E	n	n
7a. Charging	j		n	n
7b. Tapping	j		n	n
8. Cupola (blast) furnace (total)	0.5-1.75 kg/Mg charged[k] (1.0-3.5 lb/ton charged)	E	Material charged 15,714 (17,286)	18 (19)
8a. Charging	l			l
8b. Tapping	l			l
9. Casting	0.005-0.01 kg/Mg cast[m] (0.01-0.02 lb/ton cast)	E	Metal cast 30,000 (33,000)	0.2 (0.2)

Table 2-36. IDENTIFICATION AND QUANTIFICATION OF POTENTIAL FUGITIVE PARTICULATE EMISSION POINTS FOR SECONDARY COPPER, BRASS/BRONZE PRODUCTION

Source of IPFPE	Uncontrolled fugitive emission factor	Emission factor reliability rating	Model plant fugitive emission inventory	
			Operating parameter, Mg/yr (tons/year)	Uncontrolled emissions Mg/yr (tons/yr)
1. Sweating furnace (total)	0.38 kg/Mg scrap charged[a] (0.76 lb/ton scrap charged)	E	Material charged 19,789 (21,768)	8 (9)
1a. Charging	b			b
1b. Tapping	b			b
2. Drying (total)	6.85 kg/Mg scrap dried[a] (13.7 lb/ton scrap dried)	E	n	n
2a. Charging	c		n	n
2b. Discharging	c		n	n
3. Insulation burning	6.9 kg/Mg scrap burned[d] (13.8 lb/ton scrap burned)	E	Scrap burned 38,462 (42,308)	265 (292)
4. Electric induction furnace (total)	0.025-0.07 kg/Mg scrap charged[e] (0.05-0.14 lb/ton scrap charged)	E	n	n
4a. Charging	f		n	n
4b. Tapping	f		n	n
5. Reverberatory furnace (total)	1.33-3.92 kg/Mg charged[g] (2.65-7.84 lb/ton charged)	E	Material charged 12,500 (13,750)	33 (36)
5a. Charging	0.6-1.48 kg/Mg charged[g,h] (1.2-2.95 lb/ton charged)	E	Material charged 12,500 (13,750)	13[h] (14)
5b. Tapping	0.01-0.025 kg/Mg charged[g,h] (0.02-0.05 lb/ton charged)	E	Material charged 12,500 (13,750)	0.2[h] (0.2)

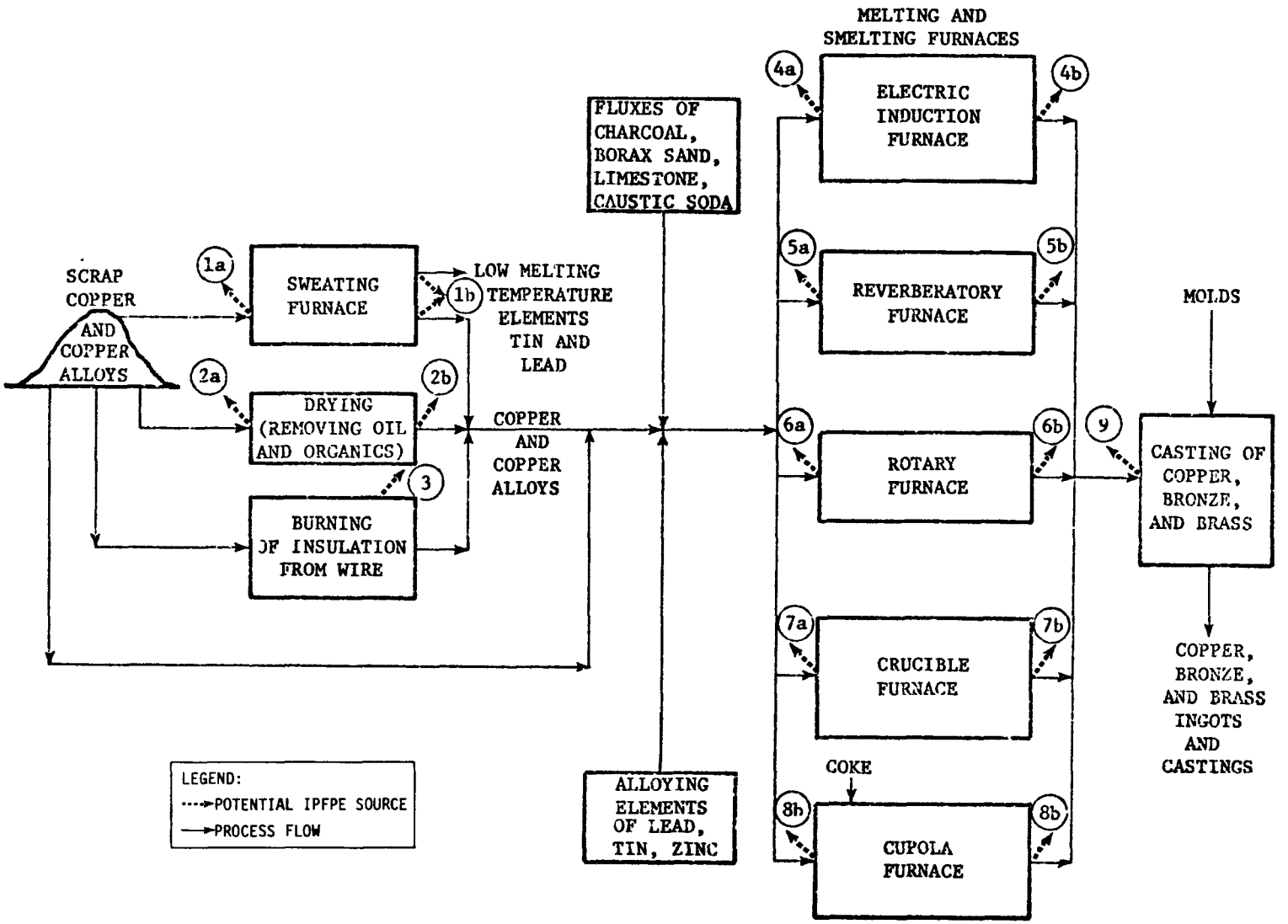

Figure 2-14. Process flow diagram for secondary brass/bronze (copper alloy) production showing potential industrial process fugitive particulate emission points.

After pretreatment operations (if required) a number of types of furnaces can be used for smelting, refining, and alloying of the scrap material. Normally alloying is done in the furnace rather than during ingot casting. Electric induction, reverberatory, rotary, crucible, and cupola furnaces are those furnaces used for smelting and refining. There is little real difference in the melting, refining, and alloying actions in these furnaces but methods of charging and heating differ significantly.

The scrap materials, along with solid or liquid fluxes, are charged to the furnace. The fluxes can be nonmetallic materials, pure metals, or alloys. Heat is supplied by burners fueled with gas or oil. Molten metal is formed and refined by blowing compressed air into the metal bath to oxidize the metallic and nonmetallic contaminents. Some oxides of impurities are removed as slag. Fluxes such as charcoal, borax, sand, limestone and caustic soda provide entrainment for the other metallic impurities.

One of the most common methods of removing metallic impurities is to introduce compressed air beneath the surface of the molten metal. This violent agitation is almost sure to produce large quantities of finely dispersed air pollutants in the exhaust gas stream.

Samples of the furnace melt are taken as the refining operation progresses. As soon as the analysis indicates that the correct grade has been achieved, the molten metal is poured into molds and cast at temperatures from 650°C to 1320°C (1200°F to 2400°F). After casting, the shapes may be rolled into plates, sheets or strips; extruded into rods, bars, seamless tubes, or drawn into wire.

A process flow diagram for secondary brass, bronze, and copper production is shown in Figure 2-14. Each potential process fugitive emission is identified and explained in Table 2-36.

2.4.4 Secondary Brass/Bronze (Copper Alloy) Production

Process Description - The basic raw material of the secondary brass/bronze and copper alloy ingot industry is copper and copper-base alloy scrap such as brasses and bronzes.

Before the scrap metal is blended in a furnace to produce the desired ingots, removal of nonmetallic contaminants or, in some instances, preprocessing the raw materials to yield more efficient and economical utilization of the scrap may be desirable. These processes may be either mechanical, hydrometallurgical, or pyrometallurgical, the first two of which are not considered in this description since they are not sources of fugitive emissions.

Pretreatment by pyrometallurgical methods may include any of the following methods: sweating, burning, or drying. Sweating furnaces may be used to remove low-melting point metals such as lead, solder, and babbitt metal. This is done by heating in a furnace which permits the low-melting components to be melted and separated from the desirable metals.

Burning is usually performed for removal of insulation from wire or cable. This is essentially an incineration process but requires carefully controlled burning.

Drying involves the use of a heated rotary dryer to vaporize excess cutting fluids from machine shop chips and borings. This must be done carefully to prevent high temperatures that would warp the steel kiln and begin to cause oxidation on the large surface area exposed on the metal chips.

If the scrap metals are relatively clean as received, pretreatment can be bypassed.

REFERENCES FOR SECTION 2.4.3

1. Multimedia Environmental Assessment of the Secondary Nonferrous Metal Industry, Volume II: Industry Profile. Radian Corporation. Contract No. 68-02-1319, Task Order No. 49. Austin, Texas. June 21, 1976.

2. Compilation of Air Pollutant Emission Factors, Second Edition. U.S. Environmental Protection Agency, Office of Air and Water Programs, Office of Air Quality Planning Standards. Publication No. AP-42. Research Triangle Park, North Carolina. April 1973.

3. Herring, W.O. Secondary Zinc Industry Emission Control Problem Definition Study. Part I - Technical Study. U.S. Environmental Protection Agency, Air Pollution Control Office. PB 201 739. Durham, North Carolina. May 1971.

4. Mack, H. Development of an Approach to Identification of Emerging Technology and Demonstration Opportunities. U.S. Environmental Protectin Agency. EPA 650/2-74-048. Columbus, Ohio. Battelle-Columbus Labs., 1974.

5. Danielson, John A. Air Pollution Engineering Manual, Second Edition. U.S. Environmental Protection Agency, Office of Air and Water Programs. Publication No. AP-40. Research Triangle Park, North Carolina. 1973.

to the condenser. If a good fit is maintained, fugitive emissions will be prevented.

Fugitive emissions from upset conditions can be controlled in several manners. Upset usually occurs when the pressure relief hole on the condenser becomes plugged resulting in pressure and heat build up with subsequent combustion of the zinc metal. If the pressure relief hole is cleaned regularly (once every 1/2 hr), the hole will not become plugged, upsets will be avoided, and fugitive emission eliminated. When upsets do occur, however, movable hoods can be placed over the pressure relief hole to capture fugitive emissions. Building evacuation to a baghouse will also effectively control the fugitive emissions.

Alloying and casting operations can be controlled by the use of fixed or movable hoods over the areas involved. Curtains which can help direct emissions into hoods are also quite useful. Building evacuation to a baghouse will also effectively control fugitive emissions. During casting operations, several steps can be taken to prevent the generation of fugitive emissions. As long as the temperature of the molten zinc is kept below 590°C (1100°F) and mold release compounds do not contain oils or other volatiles, very little fugitive emissions will be generated.[5]

Table 2-35 (continued). CONTROL TECHNIQUES FOR SECONDARY ZINC PRODUCTION IPFPE SOURCES

Industry: Secondary Zinc Production	Negligible emissions	IPFPE source typically uncontrolled	Control technologies identified in Section 2.1	FUGITIVE EMISSIONS CAPTURE AND CONTROL METHODS												
				Preventative procedures and operating changes							Capture methods				Removal equipment		
				Wet suppression (water and/or chemical)	Confinement by enclosure	Better control of raw material quality	Better control of operating parameters and procedures	Improved maintenance and/or construction program	Increase exhaust rate of primary control system		Fixed hoods, curtains, partitions, covers, etc.	Movable hoods with flexible ducts	Closed buildings with evacuation		Fabric filter	Scrubber	ESP
10. Reverberatory melting furnace																	
10a. Charging									o		o	o	+		o		
10b. Tapping									o		o	o	+		o		
11. Electric induction melting furnace																	
11a. Charging									o		o	o	+		o		
11b. Tapping									o		o	o	+		o		
12. Hot metal transfer to retort or alloying		✓											+		+		
13. Distillation retort and condenser																	
13a Charging distillation retort											o	o	+		o		
13b. Leakage between retort and condenser								o			o	o	+		o		
13c. Upset in condenser							o				o	o	+		o		
13d. Tapping											o	o	+		o		
14. Muffle distillation furnace and condenser																	
14a. Charging muffle distillation furnace											o	o	+		o		
14b. Leakage between furnace and condenser								o			o	o	+		o		
14c. Upset in condenser							o				o	o	+		o		
14d. Tapping											o	o	+		o		
15. Alloying											+	+	+		+		
16. Casting							o				+	+	+		+		

x *Typical control technique.*

o In use (but not typical) control technique.

+ *Technically feasible control technique.*

Table 2-35. CONTROL TECHNIQUES FOR SECONDARY ZINC PRODUCTION IPFPE SOURCES

Industry: Secondary Zinc Production	Negligible emissions	IPFPE source typically uncontrolled	Control technologies identified in Section 2.1	FUGITIVE EMISSIONS CAPTURE AND CONTROL METHODS													
				Preventative procedures and operating changes							Capture methods				Removal equipment		
				Wet suppression (water and/or chemical)	Confinement by enclosure	Better control of raw material quality	Better control of operating parameters and procedures	Improved maintenance and/or construction program	Increase exhaust rate of primary control system		Fixed hoods, curtains, partitions, covers, etc.	Movable hoods with flexible ducts	Closed buildings with evacuation		Fabric filter	Scrubber	ESP
1. Crushing/screening of residue skimmings							o	o			o		+		o		
2. Reverberatory sweat furnace																	
2a. Charging									o		o	o	+		o		
2b. Tapping									o		o	o	+		o		
3. Kettle (pot) sweat furnace																	
3a. Charging									o		o	o	+		o		
3b. Tapping									o		o	o	+		o		
4. Rotary sweat furnace																	
4a. Charging									o		o	o	+		o		
4b. Tapping									o		o	o	+		o		
5. Muffle sweat furnace																	
5a. Charging									o		o	o	+		o		
5b. Tapping									o		o	o	+		o		
6. Electric resistance sweat furnace																	
6a. Charging									o		o	o	+		o		
6b. Tapping									o		o	o	+		o		
7. Hot metal transfer to melting furnace		✓											+		+		
8. Crucible melting furnace																	
8a. Charging									o		o	o	+		o		
8b. Tapping									o		o	o	+		o		
9. Kettle (pot) melting furnace																	
9a. Charging									o		o	o	+		o		
9b. Tapping									o		o	o	+		o		

x Typical control technique.

o In use (but not typical) control technique.

+ Technically feasible control technique.

Control Technology - Control technology options for secondary zinc production IPFPE sources are presented in Table 2-35 and are explained in more detail below.

Better control of operating parameters and procedures such as proper feed rates, operating machinery only when required, and following proper maintenance schedules will help alleviate fugitive emissions from crushing/screening operations. Fixed hoods which enclose or cover screening operations with subsequent venting to a baghouse will effectively control fugitive emissions. Closed building evacuation to a baghouse will also serve as a means to control fugitive emissions.

The various sweating and melting furnaces can all be controlled in basically the same way. If primary control systems already are installed, the increasing of exhaust flow rates will oftentimes help reduce the volume of fugitive emissions released. Depending on furnace design, as well as space limitations and operating practices, fixed or movable hoods are very effective in the control of fugitive emissions. These hoods are usually most effective if placed over charging and particularly tapping areas since these are the major sources of fugitive emissions. A capture velocity of 0.5-1.0 meters/second (100-200 ft/min) is usually adequate for control of the fugitive emissions.[5] If limited space or operating procedures disallow the use of hoods, building evacuation to a fabric filter will effectively control fugitive emissions.

Fugitive emissions from distillation and condensation operations can be controlled in the same manner as described above. In addition, improved maintenance and/or construction materials will help prevent fugitive emissions which can escape from the connection between the distillation unit

Another analysis of particulate emissions from zinc sweat processing resulted in the following results.[4]

Component	Sweat furnace particulate emission Composition, percent by weight
$ZnCl_2$	14.5 - 15.3
ZnO	46.9 - 50.0
NH_4Cl	1.1 - 1.4
Al_2O_3	1.0 - 2.7
Fe_2O_3	0.3 - 0.6
PbO	0.2
H_2O (in $ZnCl_2 \cdot 4H_2O$)	7.7 - 8.1
Oxides of Mg, Sn, Ni, Si, Ca, Na	2.0
Carbonaceous material	10.0
Moisture (deliquescent)	5.2 - 10.2

In addition to the major components shown above, the particulates would be expected to contain trace amounts of copper, manganese, and chromium.[4]

Another analysis of particulate data for sweating of metallic scrap has shown 4 percent zinc chloride, 77 percent zinc oxide, 4 percent water, 4 percent other metal chlorides and oxides, and 10 percent carbonaceous materials. Sizes of particulates range from less than 1 μm to greater than 20 μm, but typically they are less than 2 μm.[1]

Particulate emissions from crushing/screening operations contain metallic zinc and other metals such as aluminum, copper, iron, lead, cadmium, chromium, and tin. Emissions from melting furnaces consist mostly of smoke from incomplete combustion of organic scrap, contaminants, and zinc fumes. Retort emissions consist mostly of zinc oxide fumes containing aluminum, copper, and other metals. Particle size range is from 0.05 - 1.0 μm.[1]

Reverberatory melting furnaces	6,276 Mg (6,904 tons) metal charged
Crucible melting furnaces	6,276 Mg (6,904 tons) metal charged

Not included in the inventory are fugitive emissions from plant haul roads, but the amount of roads is expected to be minimal at secondary zinc facilities. Total model plant uncontrolled process fugitive particulate emissions are 21 Mg (23 tons) per year. Major sources of fugitive emissions are crushing and screening, and sweat furnaces.

Characteristics of Fugitive Emissions - Information concerning characteristics of fugitive emissions from secondary zinc smelting was not found in the literature. Therefore, the following information concerning stack emission characteristics is presented since they may approximate those of fugitive emissions.

Particulate emissions from sweating operations commonly contain zinc, aluminum, copper, iron, lead, cadmium, manganese, and chromium, in addition to carbonaceous materials and flux materials.[1] The following are the results of samples taken from a zinc sweat furnace which were analyzed for particulate composition.[3]

	Sweat furnace particulate emission	
	Composition percent by weight	
Constituents	Sample 1	Sample 2
NH_4^+	0.47	0.36
Cl^-	8.93	8.32
Zn	47.50	44.50
Al	1.43	0.54
Cu	0.04	0.05
Fe	0.40	0.21
Pb	0.14	0.16
Cd	0.02	0.03
Mn	0.03	0.01
Cr	0.01	0.004

IPFPE Emission Rates - Very little data concerning process fugitive particulate emission factors for the secondary zinc smelting industry has been found in the literature. Therefore, emission rates as presented in Table 2-34 resulted for the most part from engineering judgements utilizing point source emission factors for the various operations identified. Most engineering judgments assumed that fugitive emissions equal 5 percent of an operation's stack emission. These values, therefore, received a reliability rating of "E" which indicates at best an order of magnitude estimate. Consequently, actual emission rates at a given facility could differ significantly from those in Table 2-34.

Example Plant Inventory - The example plant inventory for secondary zinc smelting, as shown in Table 2-27, presents potential fugitive particulate emission quantities from the various uncontrolled sources within the process. The inventory represents a plant which produces 10,950 Mg (12,045 tons) of zinc per year. Because of the many varied types of furnaces that can be utilized in secondary zinc production, the model plant configuration assumed for the inventory includes four kettle (pot) and rotary sweat furnaces, and four crucible and reverberatory melting furnaces. Also included is one crushing and screening operation. The plant inventory is not meant to display a typical plant, but merely a potential set of circumstances.

The assumed annual rate of scrap feed into the various furnaces was as follows:

Kettle (pot) sweat furnaces	7,531 Mg (8,284 tons) scrap zinc
Rotary sweat furnaces	7,531 Mg (8,284 tons) scrap zinc
Crushing and screening	2,877 Mg (3,165 tons) scrap zinc

Table 2-34 (continued). IDENTIFICATION AND QUANTIFICATION OF POTENTIAL FUGITIVE PARTICULATE EMISSION POINTS FOR SECONDARY ZINC PRODUCTION

Source of IPFPE	Uncontrolled fugitive emission factor	Emission factor reliability rating	Model plant fugitive emission inventory	
			Operating parameter, Mg/yr (tons/year)	Uncontrolled emissions Mg/yr (tons/yr)
14c. Upset in condenser	2.5-5.0 kg/Mg zinc produced[s] (5.0-10.0 lb/ton zinc produced)	E	-	w
14d. Tapping	0.01-0.02 kg/Mg zinc tapped[t,r] (0.02-0.04 lb/ton tapped)	E		r
15. Alloying	u			u
16. Casting	0.005-0.01 kg/Mg zinc cast[e] (0.01-0.02 lb/ton zinc cast)	E	Zinc cast 10,950 (12,045)	0.08 (0.09)

[a] Reference 1.

[b] Engineering judgment based on emission factors given in references 1 and 2 assuming fugitive emissions to be equal to 5 percent of stack emissions. Ranges, when they appear, were derived from factors for clean and residual scrap.

[c] Emission included in total for Source 2.

[d] Emission included in total for Source 3.

[e] Engineering judgment based on stack emission factor given in Reference 1 assuming fugitive emissions to be equal to 5 percent of stack emissions.

[f] Emissions included in total for Source 4.

[g] Emissions included in total for Source 5.

[h] Emissions included in total for Source 6.

[i] Emissions included in emissions for individual furnace operations.

[j] Engineering judgment assuming fugitive emissions from crucible melting furnace to be equal to fugitive emissions from kettle (pot) melting furnace (Source 9).

[k] Emissions included in total for Source 8.

[l] Emissions included in total for Source 9.

[m] Emissions included in total for Source 10.

[n] Emissions included in total for Source 11.

[o] Engineering judgment based on emission factor given in Reference 2, assuming fugitive emissions to be equal to 5 percent of stack emissions.

[p] Emissions included in total for Source 13.

[q] Personal communication from J. P. Barnhart of W. J. Bullock, Inc. to Thomas Janszen. Personal estimation by J. P. Barnhart. This is not considered part of normal operating conditions.

[r] Emissions included in total for Source 14.

[s] Engineering judgment assuming upset conditions for Source 13c to be equal to that for Source 14c.

[t] Engineering judgment assuming tapping emissions for Source 13d equal to those for Source 14d.

[u] Alloying often takes place with the sweating or melting operations (Reference 1), however, if performed separately, it is an engineering judgment that fugitive emissions could range from negligible to as high as the emission factor given for iron innoculation in Section 2.5 of this report.

[v] Not included in emission inventory.

[w] Upset conditions are not considered part of normal operating conditions and therefore are not included in the emission inventory.

Table 2-34 (continued). IDENTIFICATION AND QUANTIFICATION OF POTENTIAL FUGITIVE PARTICULATE EMISSION POINTS FOR SECONDARY ZINC PRODUCTION

Source of IPFPE	Uncontrolled fugitive emission factor	Emission factor reliability rating	Model plant fugitive emission inventory	
			Operating parameter, Mg/yr (tons/year)	Uncontrolled emissions Mg/yr (tons/yr)
11. Electric induction melting (total)	0.0025 kg/Mg zinc produced[e] (0.005 lb/ton zinc produced)	E	v	v
11a. Charging	n		v	v
11b. Tapping	n		v	v
12. Hot metal transfer to retort or alloying	i			i
13. Distillation retort and condenser (total)	1.18 kg/Mg zinc produced[o] (2.36 lb/ton zinc produced)	E	Zinc produced 5,475 (6,023)	6 (7)
13a. Charging distillation retort	p			p
13b. Leakage between retort condenser	Negligible	E	-	-
13c. Upset in condenser	2.5-5.0 kg/Mg zinc produced[q] (5.0-10 lb/ton zinc produced)	E	-	w
13d. Tapping	0.01-0.02 kg/Mg tapped[e,p] (0.02-0.04 lb/ton tapped)	E	p	p
14. Muffle distillation furnace and condenser	1.18 kg/Mg zinc produced[o] (2.36 lb/ton zinc produced)	E	Zinc produced 5,475 (6,023)	(6) (7)
14a. Charging muffle distillation furnace	r			r
14b. Leakage between furnace and condenser	Negligible	E	-	-

Table 2-34 (continued). IDENTIFICATION AND QUANTIFICATION OF POTENTIAL FUGITIVE PARTICULATE EMISSION POINTS FOR SECONDARY ZINC PRODUCTION

Source of IPFPE	Uncontrolled fugitive emission factor	Emission factor reliability rating	Model plant fugitive emission inventory	
			Operating parameter, Mg/yr (tons/year)	Uncontrolled emissions Mg/yr (tons/yr)
6. Electric resistance sweat furnace (total)	0.25 kg/Mg zinc scrap charged[e] (0.5 lb/ton zinc scrap charged)	E	v	v
6a. Charging	h		v	v
6b. Tapping	h		v	v
7. Hot metal transfer to melting furnaces	i			i
8. Crucible melting furnace (total)	0.0025 kg/Mg zinc produced[j] (0.005 lb/ton zinc produced)	E	Zinc produced 5,230 (5,753)	0.01 (0.01)
8a. Charging	k			k
8b. Tapping	k			k
9. Kettle (pot) melting furnace (total)	0.0025 kg/Mg zinc product[b] (0.005 lb/ton zinc produced)	E	v	v
9a. Charging	l		v	v
9b. Tapping	l		v	v
10. Reverberatory melting furnace (total)	0.0025 Kg/Mg zinc produced[e] (0.005 lb/ton zinc produced)	E	Zinc produced 5,230 (5,753)	0.01 (0.01)
10a. Charging	m			m
10b. Tapping	m			m

Table 2-34. IDENTIFICATION AND QUANTIFICATION OF POTENTIAL FUGITIVE PARTICULATE EMISSION POINTS FOR SECONDARY ZINC PRODUCTION

Source of IPFPE	Uncontrolled fugitive emission factor	Emission factor reliability rating	Model plant fugitive emission inventory	
			Operating parameter, Mg/yr (tons/year)	Uncontrolled emissions Mg/yr (tons/yr)
1. Crushing/screening of residue skimmings	0.5-3.8 kg/Mg crushed and screened[a] (1.0-7.6 lb/ton crushed and screened)	E	Residue skimmings crushed 2,877 (3,165)	6 (7)
2. Reverberatory sweat furnace (total)	Neg.-0.63 kg/Mg product[b] (Neg.-1.3 lb/ton product)	E	v	v
2a. Charging	c		v	v
2b. Tapping	c		v	v
3. Kettle (Pot) sweat furnace (total)	0.28 kg/Mg product[b] (0.56 lb/ton product	E	Metal produced 6,276 (6,904)	2 (2)
3a. Charging	d			d
3b. Tapping	d			d
4. Rotary sweat furnace (total)	0.28-0.63 kg/Mg product[e] (0.56-1.26 lb/ton product)	E	Residue skimmings 6,276 (6,904)	3 (3)
4a. Charging	f			f
4b. Tapping	f			f
5. Muffle sweat furnace (total)	0.27-0.8 kg/Mg zinc scrap charged[e] (0.54-1.6 lb/ton zinc scrap charged)	E	v	v
5a. Charging	g		v	v
5b. Tapping	g		v	v

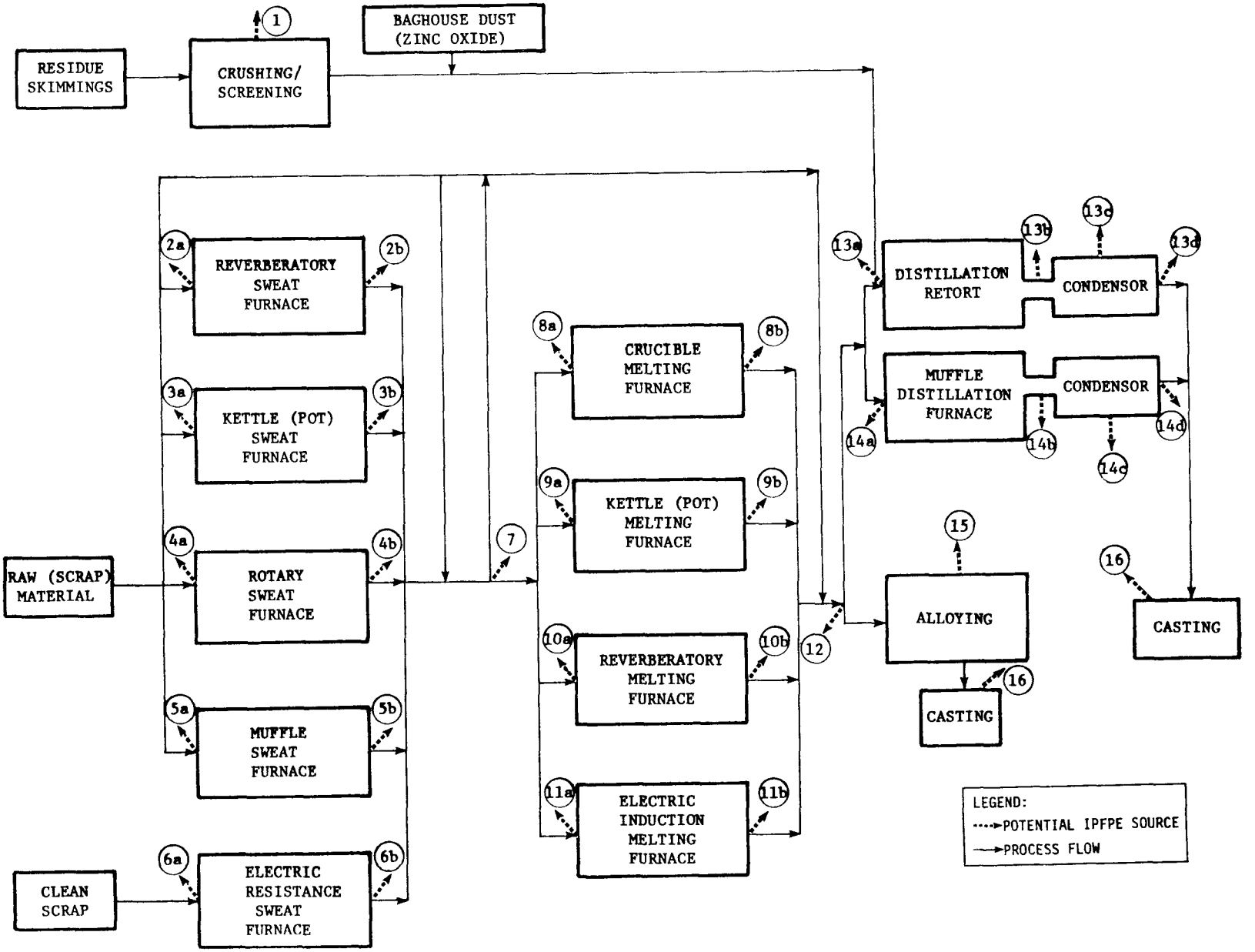

Figure 2-13. Process flow diagram for secondary zinc production showing potential industrial process fugitive particulate emission points.

directly to furnaces for further processing, (2) fed directly to a distillation furnace, or (3) it may be sampled and analyzed, and then alloyed by adding metals to obtain the specified composition, and then cast as ingots.

In some cases, the scrap received can be fed directly to melting furnaces or distillation furnaces, thereby bypassing pretreatment and/or melting furnaces. In the melting operation, melt from sweat furnaces and/or scrap zinc is melted and usually fluxed to remove impurities. Crucible, kettle (pot), reverberatory, or electric induction furnaces are used in this operation. After the melting operation, the melt may be fed directly to distillation or cast into ingots.

Distillation may be done in either of two systems: a retort furnace or a muffle furnace. Material fed into either furnace may consist of zinc scrap, or molten or cast metal obtained from the sweating and/or melting furnaces.

In retort distillation, the charge is fed into retort on a batch scale. Once the metal is molten, it begins vaporizing. The vapor passes from the retort through a refractory pipe to a condenser where it is condensed into molten zinc. At the end of the distillation process the condenser is tapped and the zinc poured into ingots.

In the muffle furnace system the bed is charged into the melting unit. As the zinc melts, the molten metal flows into the vaporizing unit. From the vaporizing unit, the vaporized zinc is channeled to the condenser where it is condensed to liquid metal. Periodically, the molten zinc is tapped from the condenser and cast into ingots.

A process flow diagram for secondary zinc production is shown in Figure 2-13. Each potential process fugitive emission is identified and explained in Table 2-34.

2.4.3 Secondary Zinc Production

Process Description - Raw materials used in secondary zinc processing are zinc scrap materials, fluxes, and fuels for furnaces. Zinc scrap materials include such items as: plated and unplated zinc castings, zinc fabrication scrap, contaminated zinc die-cast scrap, skimmings, and dross. There are three distinct processes used in the secondary zinc industry: pretreatment, melting, and distillation.

The pretreatment processes in use are based on mechanical, pyrometallurgical, and hydrometallurgical methods. Mechanical pretreatment involves physical reduction of the scrap and some means of separating the zinc from contaminating components. The primary hydrometallurgical pretreatment method is sodium carbonate leaching which is used to process skimmings and residues. Neither of these two pretreatment methods are considered sources of fugitive emissions. Sweating is the term applied to the pyrometallurgical pretreatment method used to separate zinc from higher melting metals and inorganic impurities. Reverberatory, kettle (pot), rotary, muffle, and electric furnaces are utilized to sweat zinc-bearing scrap.

Sweat processing is accomplished by charging the scrap into the furnace. The charge may be worked, by agitation or stirring during melting; and chloride flux may be present either as residual flux, in charged residual scrap, or as flux added to the charge. Working and fluxing of the charge are done to help effect the desired metal separation. A molten-metal bath is formed from the metallic zinc (with dissolved alloy metals). Non-metallic residues, along with some platings, form on the molten-metal bath surface and are skimmed off. Unmeltable attachments settle to the bottom and are removed. The molten zinc metal may then be (1) fed

REFERENCES FOR SECTION 2.4.2

1. Open Dust Sources Around Iron and Steel Plants, Draft. Midwest Research Institute. Prepared for U.S. Environmental Protection Agency, Industrial Environmental Research Laboratory. Contract No. 68-02-2120. Research Triangle Park, North Carolina. November 2, 1976.

2. Personal Communication from Gary McCutchen, U.S. Environmental Protection Agency, Office of Air Quality Planning and Standards, Research Triangle Park, North Carolina to Midwest Research Institute, Kansas City, Missouri. February 1976.

3. Transmittal from the American Iron and Steel Institute to Mr. Don Goodwin, U.S. Environmental Protection Agency, Office of Air Quality Planning and Standards, Research Triangle Park, North Carolina. Data contained in table entitled Source Data for Steel Facility Factors. July 13, 1976.

4. Compilation of Air Pollutant Emission Factors. Second Edition. U.S. Environmental Protection Agency, Office of Air and Water Management, Office of Air Quality Planning and Standards. Publication No. AP-42. Research Triangle Park, North Carolina. February, 1976.

5. Multimedia Environmental Assessment of the Secondary Nonferrous Metal Industry, Volume II: Industry Profile. Radian Corporation. Contract No. 68-02-1319, Task No. 49. Austin, Texas. June 21, 1976.

6. Control Techniques for Lead Air Emissions, Draft Final Report - PEDCo-Environmental Specialists, Inc. Prepared for U.S. Environmental Protection Agency. Contract No. 68-02-1375, Task Order No. 32. Research Triangle Park, North Carolina. October 1976.

7. Silver Valley/Bunker Hill Smelter Environmental Investigation, Interim Report. PEDCo-Environmental Specialists, Inc. Prepared for U.S. Environmental Protection Agency. Contract No. 68-02-1343, Task Order No. 8. Region X, Seattle, Washington. February 1975.

Table 2-33 (continued). CONTROL TECHNIQUES FOR SECONDARY LEAD SMELTING IPFPE SOURCES

Industry: Secondary Lead Smelting	Negligible emissions	IPFPE source typically uncontrolled	Control technologies identified in Section 2.1	FUGITIVE EMISSIONS CAPTURE AND CONTROL METHODS													
				Preventative procedures and operating changes							*Capture* methods				*Removal* equipment		
				Wet suppression (water and/or chemical)	Confinement by enclosure	Better control of raw material quality	Better control of operating parameters and procedures	Improved maintenance and/or construction program	Increase exhaust rate of primary control system		Fixed hoods, curtains, partitions, covers, etc.	Movable hoods with flexible ducts	Closed buildings with evacuation		Fabric filter	Scrubber	ESP
9. Blast or cupola furnace																	
9a. Charging											+	+	+		+		
9b. Lead tapping to holding pot											+	+	+		+		
9c. Slag tapping							o				+	+	+		+		
10. Tapping of holding pot							o				+	+	+		+		
11. Pot (kettle) furnace																	
11a. Charging											+	+	+		+		
11b. Tapping							o				+	+	+		+		
12. Casting							o				+		+		+		

x Typical control technique.

o In use (but not typical) control technique.

+ Technically feasible control technique.

Table 2-33. CONTROL TECHNIQUES FOR SECONDARY LEAD SMELTING IPFPE SOURCES

Industry: Secondary Lead Smelting	Negligible emissions	IPFPE source typically uncontrolled	FUGITIVE EMISSIONS CAPTURE AND CONTROL METHODS													
				Preventative procedures and operating changes							Capture methods				Removal equipment		
			Control technologies identified in Section 2.1	Wet suppression (water and/or chemical)	Confinement by enclosure	Better control of raw material quality	Better control of operating parameters and procedures	Improved maintenance and/or construction program	Increase exhaust rate of primary control system		Fixed hoods, curtains, partitions, covers, etc.	Movable hoods with flexible ducts	Closed buildings with evacuation		Fabric filter	Scrubber	ESP
1. Railroad car and truck unloading																	
Coke			✓														
Limestone			✓														
Lead scrap			✓														
Iron scrap			✓														
2. Coke																	
2a. Storage		✓	✓														
2b. Handling and transfer		✓	✓														
3. Limestone																	
3a. Storage		✓	✓														
3b. Handling and transfer		✓	✓														
4. Lead scrap																	
4a. Storage	✓																
4b. Handling and transfer	✓																
5. Iron scrap																	
5a. Storage	✓																
5b. Handling and transfer	✓																
6. Lead and iron scrap burning						+	o	+	o								
7. Sweating furnace																	
7a. Charging											+	+	+		+		
7b. Tapping							o				+	+	+		+		
8. Reverberatory furnace																	
8a. Charging											+	+	+		+		
8b. Tapping							o				+	+	+		+		

x Typical control technique.

o In use (but not typical) control technique.

+ Technically feasible control technique.

As is with emissions from a reverberatory furnace, 23 percent by weight is lead.[5]

Control Technology - Control technology options for secondary lead smelting IPFPE sources (except negligible sources or those covered in Section 2.1) are presented in Table 2-33 and are explained in more detail below.

Lead and iron scrap burning is essentially an incineration process and thus fugitive emission control is the same as for an incinerator. Better control of operating procedures such as feed rates or keeping charge doors closed as much as possible will help alleviate fugitive emission generation. If it is feasible to be selective in choosing only the cleaner scrap, the amount or period of burning time can be reduced and thus result in fewer fugitive emissions. If old and worn parts are allowing the escape of fugitive emissions, the replacement of these parts may help reduce fugitive emissions. The increase of exhaust rate of the primary collection system will also aid in the control of fugitive emissions.

Fugitive emissions from various furnace operations, holding pots, and casting operations may all be controlled in a similar manner. Fixed or movable hoods, or enclosed building with evacuation to fabric filter, will normally control fugitive emissions. Whether a fixed or movable hood is chosen will depend on space limitation as well as other operating procedures which may dictate the use of one type of hood or another. Building evacuation will often be useful when operations cannot accommodate hooding.

During tapping operations, the adherence to specific tapping rates will also help reduce fugitive emissions.

(88,000 tons) of lead per year. The plant inventory is not meant to display a typical plant, but merely a potential set of circumstances. To calculate the inventory, the assumed combined annual feed rate of major raw materials for all operations as shown in Figure 2-12 was as follows:

2,570 Mg (2827 tons) scrap iron
1,713 Mg (1884 tons) limestone
3,141 Mg (3,455 tons) coke
151,437 Mg (166,580 tons) scrap lead

Not included in the inventory are fugitive emissions from plant haul roads. These sources may be calculated using procedures outlined in Section 2.1. Total model uncontrolled process fugitive particulate emissions are 1,295 Mg (1,425 tons) per year. Major sources of fugitive emissions are the reverberatory furnace, blast or cupola furnace, sweating furnace, and scrap burning.

Characterization of Fugitive Emissions - Data concerning the characterization of fugitive particulate emissions from secondary lead smelting are unavailable. Thus, the following information on stack emissions is presented as an approximation of characteristics of the fugitive emissions.

Emissions from sweating furnaces range in size from 0.07 to 0.4 μm and have a mean particulate diameter of 0.3 μm.[4] Emissions from a reverberatory furnace have approximately the same size characteristics and have a lead content of about 23 percent by weight.[5]

The particle size distribution of emissions from a blast or cupola furnace are as follows:[4]

Size (μm)	Approximate percent by weight
0-1	15
1-2	45
2-3	20
3-4	15
4-16	10

Table 2-32 (continued). IDENTIFICATION AND QUANTIFICATION OF POTENTIAL FUGITIVE PARTICULATE EMISSION POINTS FOR SECONDARY LEAD SMELTING

Source of IPFPE	Uncontrolled fugitive emission factor	Emission factor reliability rating	Model plant fugitive emission inventory	
			Operating parameter, Mg/yr (tons/year)	Uncontrolled emissions Mg/yr (tons/yr)
11. Pot (kettle) furnace (total)			Total charge	
	0.02 kg/Mg charged[g]	C	12,000	0.24
	(0.04 lb/ton charged)		(13,200)	(0.26)
11a Charging	1			1
11b Tapping	1			1
12. Casting			Lead cast	
	0.44 kg/Mg lead cast[m]	C	80,000	35
	(0.87 lb/ton lead cast)		(88,000)	(38)

[a] Estimate based on data presented in Section 2.1.2; emission range derived using emission factors for unloading taconite pellets and coal/hopper car; emission factor for coke derived only from coal unloading emission factor.

[b] For complete development of this emission factor, refer to Section 2.1.4. The emission factor for source 3a is the same for source 2a. For source 3a it was assumed that S = 1.5, D = 90, PE = 100, and K_1, K_2, and K_3 = 1. Values for source 2a can be found in Section 2.1.4. Reference 1.

[c] Reference 2.

[d] Reference 3.

[e] Engineering judgment, assumed 50 percent of coal handling emission reported for coal in Reference 4.

[f] Engineering judgment based on emission factor for zinc residual scrap (Reference 1) with 5 percent resulting in fugitive emissions.

[g] Engineering judgment based on lead sweating emission factor given in Reference 5 with 6 percent resulting in fugitive emissions.

[h] Fugitive emissions for charging and tapping included in emission for total sweating furnace operation (Source 7).

[i] Fugitive emissions for charging and tapping included in emission for total reverberatory furnace operation (Source 8).

[j] Engineering judgment based on emission factor given in Reference 6 with 5 percent resulting in fugitive emissions.

[k] Fugitive emissions for charging, lead tapping to holding pot, slag tapping, and tapping of holding pot included in emission factor for total blast furnace operation (Source 9).

[l] Fugitive emissions for charging and tapping included in emissions for total pot furnace operations (Source 11).

[m] Reference 7; fugitive emissions for primary lead casting assumed equal to fugitive emissions for secondary lead casting.

Table 2-32 (continued). IDENTIFICATION AND QUANTIFICATION OF POTENTIAL FUGITIVE PARTICULATE EMISSION POINTS FOR SECONDARY LEAD SMELTING

Source of IPFPE	Uncontrolled fugitive emission factor	Emission factor reliability rating	Model plant fugitive emission inventory	
			Operating parameter, Mg/yr (tons/year)	Uncontrolled emissions Mg/yr (tons/yr)
7a Charging	h			h
7b Tapping	h			h
8. Reverberatory furnace (total)		E	Total charge	
	1.4-7.85 kg/Mg charged[g]	E	135,000	625
	(2.8-15.7 lb/ton charged)		(148,610)	(688)
8a Charging	i			i
8b Tapping	i			i
9. Blast or cupola furnace (total)			Total charge	
	6 kg/Mg charged[j]	E	57,100	343
	(12 lb/ton charged)		(62,810)	(377)
9a Charging	k			k
9b Lead tapping to holding pot	k			k
9c Slag tapping	k			k
10. Tapping of holding pot	k			k

Table 2-32 (continued). IDENTIFICATION AND QUANTIFICATION OF POTENTIAL FUGITIVE PARTICULATE EMISSION POINTS FOR SECONDARY LEAD SMELTING

Source of IPFPE	Uncontrolled fugitive emission factor	Emission factor reliability rating	Model plant fugitive emission inventory: Operating parameter, Mg/yr (tons/year)	Model plant fugitive emission inventory: Uncontrolled emissions Mg/yr (tons/yr)
Wind erosion	$\frac{(0.055)(S/1.5)}{(PE/100)^2} \frac{D}{90}$ kg/Mg material stored[b] $\left(\frac{(0.11)(S/1.5)}{(PE/100)^2} \frac{D}{90}\right.$ lb/ton material stored$\left.\right)$	D	Coke stored 3,141 (3,455)	negligible
2b Handling and transfer	0.055-0.07 kg/Mg handled[c,d] (0.11-0.13 lb/ton handled)	D	Coke handled 3,141 (3,455)	0.20 (0.22)
3. Limestone			Lime stored	
3a Stored	b	D	1,713 (1,884)	negligible
3b Handling and transfer	0.1 kg/Mg limestone handled[e] (0.2 lb/ton limestone handled)	E	Limestone handled 1,713 (1,884)	negligible
4. Lead scrap				
4a Storage	Negligible	E	-	-
4b Handling and transfer	Negligible	E	-	-
5. Iron scrap				
5a Storage	Negligible	E	-	-
5b Handling and transfer	Negligible	E	-	-
6. Lead and iron scrap burning	0.5-1.0 kg/Mg scrap burned[f] (1.0-2.0 lb/ton scrap burned)	E	Total scrap burned 151,437 (166,580)	114 (125)
7. Sweating furnace (total)	0.8-1.75 kg/Mg charged[g] (1.6-3.5 lb/ton charged)	E	Material charged 137,670 (151,437)	176 (194)

Table 2-32. IDENTIFICATION AND QUANTIFICATION OF POTENTIAL FUGITIVE PARTICULATE EMISSION POINTS FOR SECONDARY LEAD SMELTING

Source of IPFPE	Uncontrolled fugitive emission factor	Emission factor reliability rating	Model plant fugitive emission inventory: Operating parameter, Mg/yr (tons/year)	Model plant fugitive emission inventory: Uncontrolled emissions Mg/yr (tons/yr)
1. Railroad car and truck				
Coke	0.2 kg/Mg unloaded[a] (0.4 lb/ton unloaded)	E	Coke unloaded 3,141 (3,455)	0.63 (0.69)
Limestone	0.015-0.2 kg/Mg unloaded[a] (0.03-0.4 lb/ton unloaded)	E	Limestone unloaded 1,713 (1,884)	0.18 (0.20)
Lead scrap	Negligible	E	-	-
Iron scrap	Negligible	E	-	-
2. Coke				
2a Storage				
Loading onto pile	$\frac{(0.02)(K_1)(S/1.5)}{(PE/100)^2}$ kg/Mg material loaded onto pile[b] ($\frac{(0.04)(K_1)(S/1.5)}{(PE/100)^2}$ lb/ton material onto pile)	D	Coke loaded 3,141 (3,455)	negligible
Vehicular traffic	$\frac{(0.065)(K_2)(S/1.5)}{(PE/100)^2}$ kg/Mg material stored[b] ($\frac{(0.13)(K_2)(S/1.5)}{(PE/100)^2}$ lb/ton material stored)	D	Coke stored 3,141 (3,455)	negligible
Loading out	$\frac{(0.025)(K_3)(S/1.5)}{(PE/100)^2}$ kg/Mg material loaded out[b] ($\frac{(0.05)(K_3)(S/1.5)}{(PE/100)^2}$ lb/ton material loaded out)	D	Coke loaded out 3,141 (3,455)	negligible

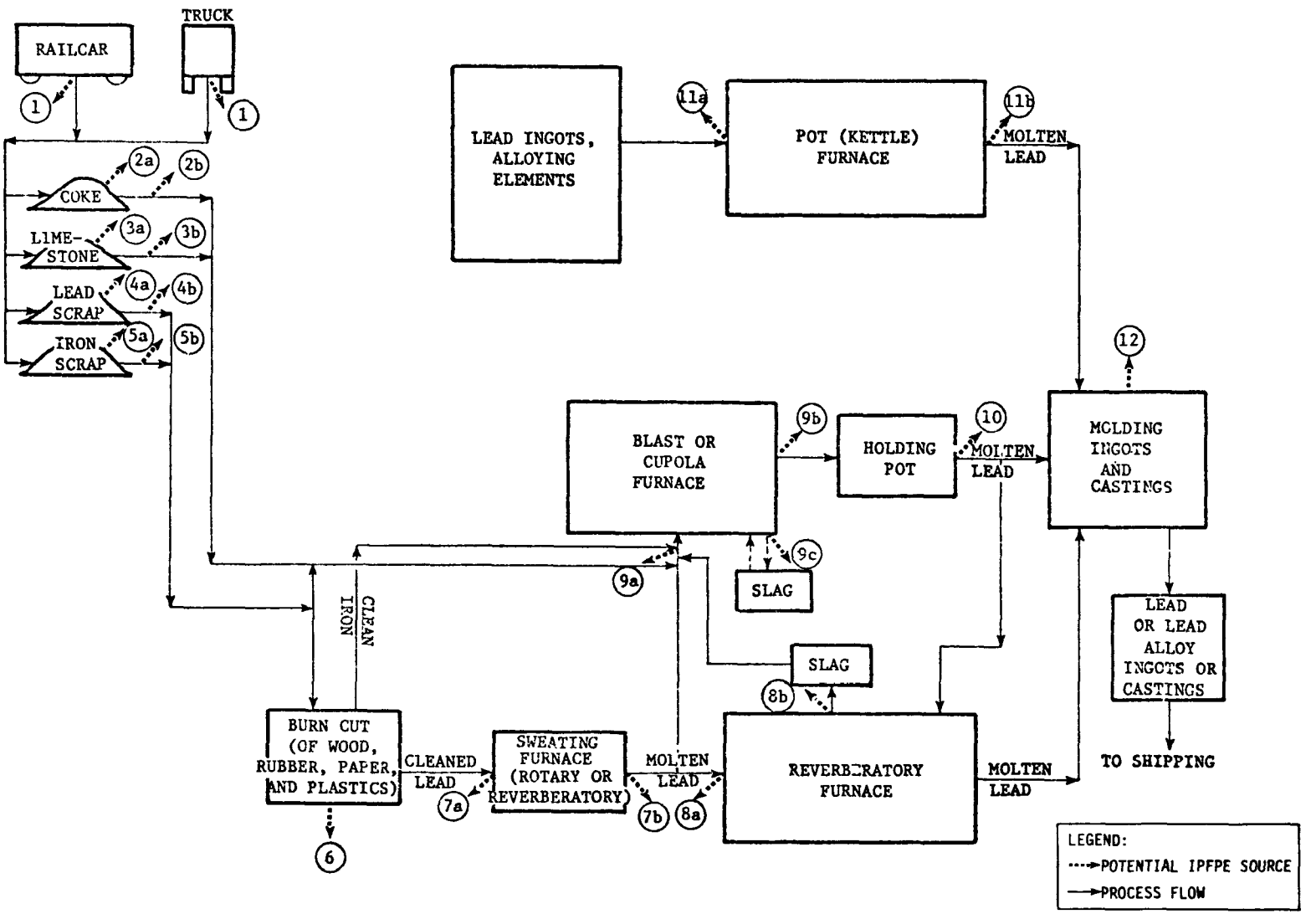

Figure 2-12. Process flow diagram for secondary lead smelting showing potential industrial process fugitive particulate emission points.

Pot-type furnaces are used for remelting, alloying, and refining processes. These furnaces are usually gas-fired. Their operation consists simply of charging ingots of lead or alloy material and firing the charge until the desired product quality is obtained.

A process flow diagram for secondary lead smelting is shown in Figure 2-12. Each potential process fugitive emission is identified and explained in Table 2-32. A dust source common to all secondary lead smelters, but not specifically included in the figure or table is plant haul roads. Proper evaluation of this category is explained in Section 2.1.

IPFPE Emission Rates - Table 2-32 presents a summary of uncontrolled emission factors for the secondary lead smelting IPFPE sources. Since these are potential uncontrolled emission rates, the site-specific level of control must be considered for application to a specific plant. Also included are reliability factors for each estimate.

The emission factors for various smelting operations (other than storage piles and casting) are based on the AP-42[1] "stack" emission factors for each entire operation, where 5 percent was assumed to escape as fugitive particulate emissions. Therefore, these values received a reliability rating of "E", which indicates at best an order of magnitude estimate. Actual IPFPE factors are not available for the secondary lead industry. Consequently, actual emission rates at a given facility could differ significantly from those in Table 2-32.

Example Plant Inventory - The example plant inventory for secondary lead smelting as shown in Table 2-32 presents potential fugitive particulate emission quantities from the various uncontrolled sources within the process. The inventory represents a facility which produces 80,000 Mg

2.4.2 Secondary Lead Smelting

Process Description - Two-thirds of the output of the secondary lead industry is processed in blast furnaces or cupolas. Some smelting is also done in reverberatory furnaces and pot furnaces.

The reverberatory furnace reclaims lead from a charge of lead scrap, battery plates, oxides, drosses, and lead residues. The furnace consists of an outer shell built in the shape of a rectangular box lined with refractory brick. To provide heat for melting, the charge gas or oil-fired burners are usually placed at one end of the furnace, and the material to be melted is charged through an opening in the shell. The charge is placed in the furnace in such a manner as to keep a small mound of unmelted material on top of the bath. Continuously, as this mound becomes molten at the operating temperature (approximately 1250°C (2280°F)), more material is charged. Lead is tapped off periodically as the level of the metal rises in the furnace.

The blast furnace is normally charged with the following: rerun slag from previous runs, cast-iron scrap, limestone, coke, and drosses from pot furnace refining, oxides and reverberatory slag. Similar to an iron cupola, the furnace basically consists of a steel cylinder lined with refractory material. Air, under high pressure, is introduced at the bottom through tuyeres to permit combustion of the coke, which provides the heat and a reducing atmosphere. As the charge material melts, limestone and iron form an oxidation-retardant flux that floats to the top, and the molten lead flows from the furnace into a holding pot at a nearly continuous rate. The rest of the tapped molten material is slag. From the holding pot, the lead is usually cast into large ingots called "button" or "sows."

REFERENCES FOR SECTION 2.4.1

1. Air Pollution Engineering Manual, Second Edition. Davidson, J.A. (ed.). U.S. Environmental Protection Agency. Research Triangle Park, N.C. AP-40. May 1973.

2. Particle Pollutant System Study. Vol. III. Handbook of Emissions Properties. Midwest Research Institute. Prepared for U.S. Environmental Protection Agency. Contract No. CPA 22-69-104. Durham, North Carolina. May 1971.

3. Gerstein, S.M., and M.E. Franza. Control Technology for Secondary Aluminum Smelters. Teller Environmental Systems, Inc. Presented at the 68th Annual Meeting of the Air Pollution Control Association, Boston. June 1975.

4. Compilation of Air Pollutant Emission Factors, Second Edition. U.S. Environmental Protection Agency. Research Triangle Park, N.C. AP-42. April 1973.

5. Multimedia Environmental Assessment of the Secondary Non-ferrous Metal Industry, Vol. II. Final Draft. Radian Corporation. Austin. June 1976.

the building with subsequent evacuation and venting it to a control device; this would also control emissions from other operations within the building.

For control of emissions from fluxing, the emissions can be captured by installing a hood above the fluxing operation and venting it to a baghouse or a scrubber.[1,2]

Hot dross handling and cooling emissions can also be captured by hooding and venting it to a fabric filter.[1] If the slag is cooled indoors, building evacuation can also control the emissions.

Table 2-31. CONTROL TECHNIQUES FOR SECONDARY ALUMINUM SMELTERS IPFPE SOURCES

Industry: Secondary Aluminum Processing	Negligible emissions	IPFPE source typically uncontrolled	FUGITIVE EMISSIONS CAPTURE AND CONTROL METHODS														
			Control technologies identified in Section 2.1	Preventative procedures and operating changes							Capture methods				Removal equipment		
				Wet suppression (water and/or chemical)	Confinement by enclosure	Better control of raw material quality	Better control of operating parameters and procedures	Improved maintenance and/or construction program	Increase exhaust rate of primary control system		Fixed hoods, curtains, partitions, covers, etc.	Movable hoods with flexible ducts	Closed buildings with evacuation		Fabric filter	Scrubber	Afterburner
1. Sweating furnace						+					x				x		x
2. Crushing and screening scrap metal											+	+	+				
3. Chip (rotary) dryer								o	+								
4. Smelting (reverberatory) furnace											x		+		x		
5. Smelting (crucible) furnace						+					x		o		x		
6. Smelting (induction) furnace											x		+		x		
7. Fluxing (chlorination)											+				x	x	
8. Hot dross handling and cooling											+	+			+		
9. Pouring hot metal into molds or crucible	✓																

x Typical control technique.

o In use (but not typical) control technique.

+ Technically feasible control technique.

One study found that the major constituent in the fume from salt-cryolite fluxing in a furnace was sodium chloride with considerable smaller quantities of compounds of aluminum and magnesium. The particles were all under 2 μm. The fumes were somewhat corrosive when dry, and when wet, formed a highly corrosive sludge that tended to set up and harden if allowed to stand for any appreciable time.[1]

Another study made of the fumes from degassing of aluminum revealed that 100 percent of the fumes were smaller than 2 μm and 90 to 95 percent smaller than 1 μm. Mean particle size appeared under a microscope to be about 0.7 μm.[1]

Particle size data from an aluminum sweating furnace with a capacity of 345 kg/hr (760 lb/hr) indicate that 95 percent of the particles are less than 39 μm.[5]

Control Technology - Control technology options for the secondary aluminum production IPFPE sources (except those covered in Section 2.1) are presented in Table 2-31 and explained in further detail below.

Raw materials in the form of sheet castings, clippings, and borings are normally received and stored inside the building, therefore the fugitive dust, if any, is confined.

In the dry milling process, dust generated at the crusher, shaker screens and at points of transfer can be controlled by hooding these operations.[1]

Emissions from the rotary dryer are usually vented to a scrubber system. Fugitive dusts could result from process leaks, and may be controlled by improved maintenance and/or increasing the exhaust rate.

Emissions from sweating and smelting furnaces may be controlled by installing a canopy hood and ducting it to a fabric filter. Another system that may be used is enclosing

In drawing the plant inventory, the following assumptions were made:

- 2,727 Mg (3,000 tons) of scrap aluminum containing high temperature elements (such as iron) are processed in the sweating furnace.
- 1,126 Mg (1,250 tons) of scrap such as sheet, cashings, borings and turnings are received, and processed in a rotary dryer.
- 4,546 Mg (5,000 tons) of metal are processed and refined in the reverberatory furnace.
- 455 Mg (500 tons) of chlorine are used for fluxing.

Not included in the inventory are plant haul roads since this source should be negligible. Total model plant uncontrolled process fugitive particulate emissions are 20 Mg (22 tons) per year.

Characteristics of Fugitive Emissions - Particulates from secondary aluminum production are less than 2 μm in size. The particulates may be toxic because of the fluorides and chlorides that are emitted. Table 2-30 shows the effluent characteristics from secondary aluminum production.

Table 2-30. EFFLUENT CHARACTERISTICS FROM SECONDARY ALUMINUM PRODUCTION[2]

Source	Maximum particle size, μm	Chemical composition	Toxicity
Fluxing	2.0	Highly variable, may contain Al_2O_3, $AlCl_3$, NaCl fluorides, oxides of alkali metals	Toxic due to fluorides and chlorides
Chlorinating	1.0		

Table 2-29 (continued). IDENTIFICATION AND QUANTIFICATION OF POTENTIAL FUGITIVE PARTICULATE EMISSION POINTS FOR SECONDARY ALUMINUM PRODUCTION

Source of IPFPE	Uncontrolled fugitive emission factor	Emission factor reliability rating	Model plant fugitive emission inventory	
			Operating parameter, Mg/yr (tons/year)	Uncontrolled emissions Mg/yr (tons/yr)
7. Fluxing (chlorination)	25 kg/Mg chlorine used[a] (50 lb/ton chlorine used)	E	Chlorine used[i] 455 (500)	12 (13)
8. Hot dross handling and cooling	0.11 kg/Mg metal processed[j] (0.22 lb/ton metal processed)	E	Metal processed 4,546 (5,000)	1 (1)
9. Pouring hot metal into molds or crucible	Negligible[k]	E	-	Negligible

[a] Engineering judgement, assume 5% of uncontrolled stack emissions as reported in Reference 4, p. 7.8-1.

[b] Emissions included with total sweating furnace emission factor.

[c] Based on engineering judgement.

[d] Assume uncontrolled fugitive emissions are equal to the emissions from the sweating furnace.

[e] Emissions included with total reverberatory furnace emission factor.

[f] Emissions included with total crucible furnace emission factor.

[g] Assume uncontrolled fugitive emissions are equal to the emissions from the crucible furnace.

[h] Emissions included with total induction furnace emission factor.

[i] Assume that the amount of fluxing agent used is 10% of the weight of the metal processed in the reverberatory furnace (Reference 1, p. 286).

[j] Assume that the emissions are equal to the emissions from the reverberatory furnace.

[k] Emissions are negligible as reported in Reference 1, p. 285.

Table 2-29. IDENTIFICATION AND QUANTIFICATION OF POTENTIAL FUGITIVE PARTICULATE EMISSION POINTS FOR SECONDARY ALUMINUM PRODUCTION

Source of IPFPE	Uncontrolled fugitive emission factor	Emission factor reliability rating	Model plant fugitive emission inventory	
			Operating parameter, Mg/yr (tons/year)	Uncontrolled emissions Mg/yr (tons/yr)
1. Sweating furnace	0.36 kg/Mg metal processed[a] (0.72 lb/ton metal processed)	E	Scrap processed 2,727 (3,000)	1 (1)
1a. Charging	b			
1b. Tapping	b			
2. Crushing and screening scrap metal	Negligible[c]	E		Negligible
3. Chip (rotary) dryer	0.36 kg/Mg metal dried[d] (0.72 lb/ton metal dried)	E	Metal dried 1,136 (1,250)	5 (6)
4. Smelting (reverberatory) furnace	0.11 kg/Mg metal processed[a] (0.22 lb/ton metal processed)	E	Metal processed 4,546 (5,000)	1 (1)
4a. Charging	e			
4b. Tapping	e			
5. Smelting (crucible) furnace	0.05 kg/Mg metal processed[a] (0.09 lb/ton metal processed)	E	-	-
5a. Charging	f			
5b. Tapping	f			
6. Smelting (induction) furnace	0.05 kg/Mg metal processed[g] (0.09 lb/ton metal processed)	E	-	-
6a. Charging	h			
6b. Tapping	h			

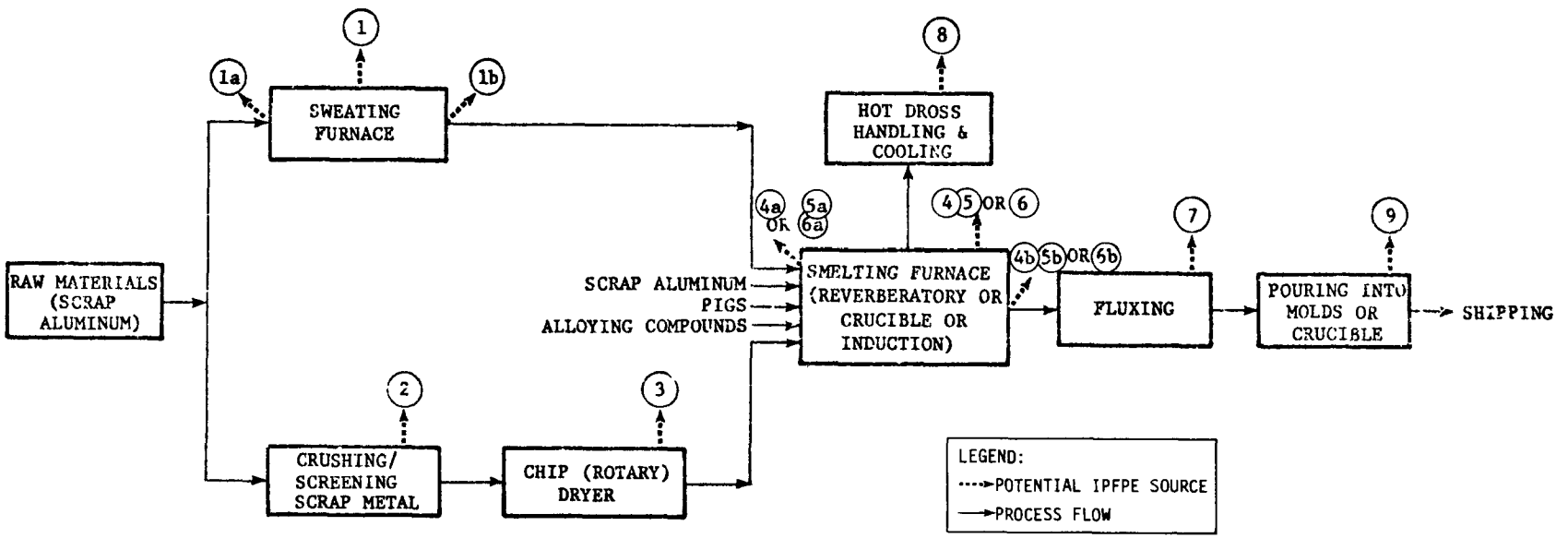

Figure 2-11. Process flow diagram for secondary aluminum production showing potential industrial process fugitive particulate emission points.

allowed to cool. After it is cooled, it is either discarded as waste or remelted in the sweating furnace.

The final step prior to pouring is degassing. The metal is degassed by bubbling dry nitrogen, chlorine or a mixture of the two gases through the molten metal bath. Chlorine forms hydrogen chloride while nitrogen mechanically sweeps the gas out of the molten metal.

After degassing, the metal is poured either into ingot molds or sometimes into preheated crucibles for direct delivery to the customer.

A process flow diagram for secondary aluminum processing is shown in Figure 2-11. Each potential process fugitive emission point is identified and explained in Table 2-29.

IPFPE Emission Rates - Table 2-29 presents a summary of uncontrolled emission factors for secondary aluminum smelting. Since these are potential uncontrolled emission rates, the site-specific level of control must be considered for application to a specific plant. Also included are reliability factors for each estimate. Note that the emission factors with an "E" rating are at best order of magnitude estimates; consequently, actual emission rates at a given facility could differ significantly from those in Table 2-29.

Example Plant Inventory - The example plant inventory for secondary aluminum, as shown in Table 2-29 presents potential fugitive particulate emission quantities from the various uncontrolled sources within the process. The inventory represents a plant which processes 4,546 Mg (5,000 tons) of metal per year. The plant inventory is not meant to display a typical plant, but merely a potential set of circumstances.

2.4 SECONDARY NON-FERROUS INDUSTRIES

2.4.1 Secondary Aluminum Smelters

Process Description - The raw materials for secondary aluminum smelting may be (1) aluminum pigs (to meet standard alloy specifications), (2) foundry returns (gates, risers, rejected castings, etc.), and (3) scrap (painted sidings, turnings, cans, etc.). If the scrap contains large amounts of paint, oil, grease and other contaminants, it may be dried in a chip dryer prior to loading into the reverberatory furnace. Scrap, rich in iron content is processed in a sweating furnace prior to charging into a reverberatory furnace.[2,3]

In the United States, the reverberatory furnace is used for 80 to 90 percent of all secondary aluminum smelting. All types of scrap aluminum are charged into the furnace, which operates at a temperature of 677°C to 760°C (1250°F to 1400°F). Fluxing, alloying, degassing and demagging all take place in the furnace; however, fluxing, degassing and demagging can also be done in a separate chamber. Because molten aluminum oxidizes rapidly when exposed to air, it must always be covered with a molten flux to retard oxidation.

Demagging (removal of magnesium) is accomplished by introducing elemental chlorine gas into the molten aluminum. The chlorine reacts and is driven off in the form of magnesium chloride.

While the charge is melting, alloying may be done. Specified amounts of other metals are added to the melt to obtain the desired percentage of each metal. If solvent fluxes are added to the melt, impurities in the form of oxides float to the top of the melt and are skimmed off and

7. Scheuneman, J.J., M.D. High, and W.E. Bye. Air Pollution Aspects of the Iron and Steel Industry. U.S. Department of Health, Education, and Welfare, Division of Air Pollution. June 1963.

8. Silver Valley/Bunker Hill Smelter Environmental Investigation, Interim Report. PEDCo-Environmental Specialists, Inc. Prepared for U.S. Environmental Protection Agency, Region X. Contract No. 68-02-1343. Seattle, Washington. February 1975.

9. Evaluation of Sulfur Dioxide and Arsenic Control Techniques for ASARCO - Tacoma Copper Smelter. PEDCo-Environmental Specialists, Inc. Prepared for U.S. Environmental Protection Agency, Industrial Environmental Research Laboratories. Contract No. 68-02-1321, Task Order No. 35. Cincinnati, Ohio. July 1976. Draft.

10. Personal communication with Mr. J.P. Barnhart of W.J. Bullock, Inc. while on a plant visit to the W.J. Bullock secondary zinc facilities, Birmingham, Alabama. September 29, 1976.

11. Personal communication from R.J. Kearney (Kennecott Copper Smelters) to R.D. Rovany, U.S. Environmental Protection Agency. November 22, 1974.

12. Personal communication from Mr. James C. Caraway of Texas Air Control Board to R. Amick during a meeting with the Texas Air Control Board. Austin, Texas. October 6, 1976.

13. Jones, H.R. Pollution Control in the Nonferrous Metals Industry. Noyes Data Corporation. Park Ridge, New Jersey. 1972.

14. Environmental Assessment of the Domestic Primary Copper, Lead, and Zinc Industries Vol. I (Draft). PEDCo-Environmental Specialists, Inc. Prepared for U.S. Environmental Protection Agency, Industrial Environmental Research Laboratory. Contract No. 68-02-1321. Cincinnati, Ohio.

REFERENCES FOR SECTION 2.3.4

1. Personal communication from Mr. S. Norman Kesten, Assistant to the Vice-President, Environmental Affairs, ASARCO to Mr Donald R. Goodwin, Director, U.S. Environmental Protection Agency, Emission Standards and Engineering Division, Research Triangle Park, North Carolina. January 17, 1977.

2. Open Dust Sources Around Iron and Steel Plants, Draft. Midwest Research Institute. Prepared for U.S. Environmental Protection Agency, Industrial Environmental Research Laboratory. Contract No. 68-02-2120. Research Triangle Park, North Carolina. November 2, 1976.

3. Vandegrift, A.E., and L.J. Shannon. Handbook of Emissions, Effluents, and Control Practices for Stationary Particulate Pollutant Sources. Midwest Research Institute. Prepared for U.S. Environmental Protection Agency. Contract No. CPA 22-69-104. November 1, 1970.

4. Compilation of Air Pollutant Emission Factors. Second Edition. U.S. Environmental Protection Agency, Office of Air and Water Management, Office of Air Quality Planning and Standards. Publication No. AP-42. Research Triangle Park, North Carolina. February, 1976.

5. Transmittal from the American Iron and Steel Institute to Mr. Don Goodwin, U.S. Environmental Protection Agency, Office of Air Quality Planning and Standards, Research Triangle Park, North Carolina. Data contained in table entitled Source Data for Steel Facility Factors. July 13, 1976.

6. Iversen, R.E. Meeting with U.S. Environmental Protection Agency and AISI on Steel Facility Emission Factors, April 14 and 15, 1976. U.S. Environmental Protection Agency Memorandum. June 7, 1976.

tions are a problem in the retort furnace building, the building can be evacuated to a fabric filter. Fixed or movable hoods can also be utilized to control fugitive emissions generated during zinc casting. Often times overhead space may be required for casting. In order to make the hoods effective, curtains can be placed around the casting area to help direct emissions to the hood.[10]

The cast of the ductwork and baghouse to control fugitive emissions from ten secondary zinc retort furnaces was approximately $250,000 about 3-4 years ago.[10]

placed over the discharge area with subsequent venting to a fabric filter.

Fugitive emissions from sinter machine discharge and screens and the coke-sinter mixer can be controlled by various methods. Often times if proper operating procedures are following, such as not overloading the systems, fugitive emissions can be kept to a minimum. If worn seals and parts are allowing emissions to escape, replacement with the proper parts will help alleviate fugitive emissions. If the nature of the operation is such that fugitive emissions cannot be controlled in this manner, enclosure, or fixed hoods or closed building with evacuation to a fabric filter will effectively control the emissions. Fixed hoods are likely to be more economical than building evacuation.

Various means exist for controlling fugitive emissions from the retort furnace building and its associated operations. As was observed at a secondary zinc retort operation, one of the major sources of emissions from a retort furnace can occur under upset conditions when the pressure relief hole on the condenser plugs, resulting in pressure build-up and eventual combustion of the zinc. If proper operating procedures are followed to prevent plugging of the pressure relief hole, upsets can be prevented. Otherwise movable hoods can be placed over the pressure relief hole during upsets and the emissions vented to a fabric filter. Retort furnaces can also be fitted with fixed or movable hoods to capture fugitive emissions from tapping and especially residue discharge and cooling. If the crucible into which the residue is discharged is allowed to remain under a hood until a crust forms on the surface and fuming ceases, the fugitive emissions generated during the period can be captured and vented to a fabric filter. If space limita-

Table 2-28. CONTROL TECHNIQUES FOR PRIMARY ZINC PRODUCTION IPFPE SOURCES

Industry: Primary Zinc Production	Negligible emissions	IPFPE source typically uncontrolled	FUGITIVE EMISSIONS CAPTURE AND CONTROL METHODS														
				Preventative procedures and operating changes							Capture methods				Removal equipment		
			Control technologies identified in Section 2.1	Wet suppression (water and/or chemical)	Confinement by enclosure	Better control of raw material quality	Better control of operating parameters and procedures	Improved maintenance and/or construction program	Increase exhaust rate of primary control system	Minimize free-all distance (chute or other device)	Fixed hoods, curtains, partitions, covers, etc.	Movable hoods with flexible ducts	Closed buildings with evacuation		Fabric filter	Scrubber	ESP
1. Railroad car or truck unloading																	
1a. Zinc ore concentrate			✓														
1b. Sand			✓														
1c. Coke			✓														
2. Zinc ore concentrate																	
2a. Storage		✓	✓														
2b. Handling and transfer		✓	✓														
3. Sand																	
3a. Storage		✓	✓														
3b. Handling and transfer		✓	✓														
4. Coke																	
4a. Storage		✓	✓														
4b. Handling and transfer		✓	✓														
5. Sinter machine windbox discharge				+	+					+	+				+		
6. Sinter machine discharge and screens					x		x	x			o		o		o		
7. Coke-sinter mixer					x		x	x			o		o		o		
8. Retort furnace building		✓									+		+		+		
8a. Retort furnace tapping											+	+	+		+		
8b. Retort furnace residue discharge and cooling											+	+	+		+		
8c. Retort furnace upset		✓					x					+			+		
9. Zinc casting											o	o			o		

x Typical control technique.

o In use (but not typical) control technique.

+ Technically feasible control technique.

Zinc	-	5 - 25
Lead	-	30 - 35
Cadmium	-	2 - 15
Sulfur	-	8 - 13

Flue gas from retort buildings range from the micron to submicron size and normally are 50-70 percent zinc and 0-3 percent lead by weight.[13]

The following is a listing of some components of flue dusts from multiple-hearth, suspension, and fluid bed roasters.[14]

Component	Percent (by weight)
Zinc	54.0
Lead	1.4
Sulfur	7.0
Cadmium	0.41
Iron	7.0
Copper	0.4
Manganese	0.21
Tin	0.01
Mercury	0.03

Control Technology - Control technology options for the primary zinc production IPFPE sources (except those covered in Section 2.1) are present in Table 2-28 and are explained in further detail below.

Fugitive emissions from the sinter machine windbox discharge can be effectively controlled in several ways. A practical method is to minimize the free-fall distance from the bottom discharge chute of the windbox to the receiving conveyor belt or receptacle. Wet suppression by means of water spray will also control fugitive emissions. This can be accomplished by applying the water spray to materials as they are discharged from the windbox. Enclosure of the discharge chute as well as the receiving device is a more elaborate means of control of fugitive emissions. If fugitive emissions are a severe problem, a fixed hood can be

Example Plant Inventory - The example plant inventory for primary zinc production as shown in Table 2-27 presents potential fugitive particulate emission quantities from the various uncontrolled sources within the process. The inventory represents a plant which produces 68,100 Mg (75,000 tons) of zinc per year. The inventory is not meant to display a typical plant, but merely a potential set of circumstances.

The assumed feed rate of raw material to produce 1 Mg of zinc was as follows:

- 2.85 Mg (3.14 tons) of zinc ore concentrate
- 0.02 Mg (0.02 tons) of sand
- 0.08 Mg (0.09 tons) of coke

Not included in the inventory are fugitive emissions from plant haul roads. These sources may be calculated using procedures outlined in Section 2.1. Total model plant uncontrolled process particulate emissions are 647 Mg (712 tons) per year. Major sources of fugitive emissions are zinc ore handling and transfer, zinc casting, retort building, and sinter machine discharge and screens. Fugitive emissions from retort furnace upsets were not included in the inventory since they are not considered part of normal operations.

Characterization of Fugitive Emissions - Data concerning the characterization of fugitive emissions from primary zinc production are unavailable. The data which follow are the characterizations of flue gases from primary zinc production and are presented since they may closely parallel characteristics of the fugitive emissions. Flue gas emissions from sinter machines are less than 10 μm in size and generally have the following percentages (by weight) of zinc, lead, cadmium, and sulfur.[13]

Table 2-27 (continued). IDENTIFICATION AND QUANTIFICATION OF POTENTIAL FUGITIVE PARTICULATE EMISSION POINTS FOR PRIMARY ZINC PRODUCTION

Source of IPFPE	Uncontrolled fugitive emission factor	Emission factor reliability rating	Model plant fugitive emission inventory	
			Operating parameter, Mg/yr (tons/year)	Uncontrolled emissions Mg/yr (tons/yr)

[a] Estimate based on data presented in Section 2.1.2; emission range derived using emission factors for unloading of Taconite pellets and coal/hopper car; emission factor for coal derived from coal unloading factor only.

[b] For complete development of this emission factor, refer to Section 2.1.4. The emission factor for sources 3a and 4a are the same as source 2. For sources 2a and 3a it was assumed that S = 1.5, D = 90, PE = 100, and K_1, K_2, and K_3 = 1. Values for source 4 can be found in Section 2.1.4. Reference 2.

[c] Engineering judgment assuming that fugitive emission factors given for lead ore concentrate (Reference 3) to be similar to those for zinc ore concentrate.

[d] Reference 4.

[e] Engineering judgment based on 50% of emission factor given for coal in Reference 4.

[f] Reference 5.

[g] Engineering judgment assuming that fugitive emission factors given for sintering machine in iron production (Reference 6) is similar for sintering in zinc production.

[h] Reference 7.

[i] Emissions from coke-sinter mixer included in emission factor for sinter machine discharge and screens (emission source 6).

[j] Engineering judgment using emission factor from retort building in primary lead smelting (Reference 8).

[k] Emissions from retort furnace tapping included in emission factor for retort building total (emission source 8).

[l] Engineering judgment based on observation of retort residue discharging and cooling at a secondary zinc smelter which is similar to primary zinc production.

[m] Engineering judgment using emission factor for primary copper smelting given in Reference 9. Not considered part of ordinary operations. Reference 10.

[n] Engineering judgment assuming fugitive emissions from zinc casting equal to fugitive emission for copper casting given in reference 11.

Table 2-27 (continued). IDENTIFICATION AND QUANTIFICATION OF POTENTIAL FUGITIVE PARTICULATE EMISSION POINTS FOR PRIMARY ZINC PRODUCTION

Source of IPFPE	Uncontrolled fugitive emission factor	Emission factor reliability rating	Model plant fugitive emission inventory	
			Operating parameter, Mg/yr (tons/year)	Uncontrolled emissions Mg/yr (tons/yr)
5. Sinter machine windbox discharge	0.12-0.55 kg/Mg sinter[d,g] (0.25-1.1 lb/ton sinter)	E	Sinter 70,788 (78,867)	24 (26)
6. Sinter machine discharge and screens	0.28-1.22 kg/Mg sinter[g,h] (0.55-2.45 lb/ton sinter)	E	Sinter 70,788 (78,867)	53 (59)
7. Coke-sinter mixer	i			g
8. Retort furnace building	1.0-2.0 kg/Mg of zinc[j] (2.0-4.0 lbs/ton of zinc)	E	Zinc 68,100 (75,000)	61 (68)
8a. Retort furnace tapping	k			i
8b. Retort furnace residue discharge and cooling	0.25-1.0 kg/Mg of zinc[l] (0.5-2.0 lb/ton of zinc)	E	Zinc 68,100 (75,000)	43 (47)
8c. Retort furnace upset	2.5-5 kg/Mg zinc[m] (5-10 lbs/ton zinc)	E	Zinc 68,100 (75,000)	
9. Zinc casting	1.26 kg/Mg zinc[n] (2.52 lb/ton zinc)	E	Zinc 68,100 (75,000)	86 (95)

Table 2-27 (continued). IDENTIFICATION AND QUANTIFICATION OF POTENTIAL FUGITIVE PARTICULATE EMISSION POINTS FOR PRIMARY ZINC PRODUCTION

Source of IPFPE	Uncontrolled fugitive emission factor	Emission factor reliability rating	Model plant fugitive emission inventory: Operating parameter, Mg/yr (tons/year)	Model plant fugitive emission inventory: Uncontrolled emissions Mg/yr (tons/yr)
Wind erosion	$\frac{(0.055)(S/1.5)}{(PE/100)^2} \frac{D}{90}$ kg/Mg material stored[b]	D	Ore concentrate loaded out 195,447 (214,992)	10 (11)
	$\left(\frac{(0.11)(S/1.5)}{(PE/100)^2} \frac{D}{90}\right.$ lb/ton material stored$\left.\right)$			
2b. Handling and transfer	0.82-2.5 kg/Mg handled[c] (1.64-5.0 lb/ton handled)	E	Ore concentrate handled 195,447 (214,992)	324 (356)
3. Sand				
3a. Stored	b	D	Sand 1,613 (1,774)	0.27 (0.29)
3b. Handling and transfer	0.15 kg/Mg handled[d] (0.3 lb/ton handled)	D	Sand 1,613 (1,774)	0.24 (0.26)
4. Coke				
4a. Storage	b	D	Coke 5,734 (6,307)	1 (1)
4b. Handling and transfer	0.06-0.1 kg/Mg handled[e,f] (0.12-0.2 lb/ton handled)	D	Coke 5,734 (6,307)	0.46 (0.50)

Table 2-27. IDENTIFICATION AND QUANTIFICATION OF POTENTIAL FUGITIVE PARTICULATE EMISSION POINTS FOR PRIMARY ZINC PRODUCTION

Source of IPFPE	Uncontrolled fugitive emission factor	Emission factor reliability rating	Model plant fugitive emission inventory	
			Operating parameter, Mg/yr (tons/year)	Uncontrolled emissions Mg/yr (tons/yr)
1. Railroad car or truck unloading				
1a. Zinc ore concentrate	0.015-0.2 kg/Mg unloaded[a] (0.03-0.4 lb/ton unloaded)	E	Zinc ore concentrate 195,447 (214,992)	21 (23)
1b. Sand	0.015-0.2 kg/Mg unloaded[a] (0.03-0.4 lb/ton unloaded)	E	Sand 1,613 (1,774)	0.17 (0.19)
1c. Coke	0.2 kg/Mg unloaded[a] (0.4 lb/ton unloaded)	E	Coke 5,734 (6,307)	1 (1)
2. Zinc ore concentrate				
2a. Storage				
Loading onto pile	$\frac{(0.02)(K_1)(S/1.5)}{(PE/100)^2}$ kg/Mg material loaded onto pile[b]	D	Ore concentrate loaded 195,447 (214,992)	4 (4)
	$\left(\frac{(0.04)(K_1)(S/1.5)}{(PE/100)^2}\right.$ lb/ton material loaded onto pile$\left.\right)$			
Vehicular traffic	$\frac{(0.065)(K_2)(S/1.5)}{(PE/100)^2}$ kg/Mg material stored[b]	D	Ore concentrate stored 195,447 (214,992)	13 (14)
	$\left(\frac{(0.13)(K_2)(S/1.5)}{(PE/100)^2}\right.$ lb/ton material stored$\left.\right)$			
Loading out	$\frac{(0.025)(K_3)(S/1.5)}{(PE/100)^2}$ kg/Mg material loaded out[b]	D	Ore concentrate loaded out 195,447 (214,992)	5 (5)
	$\left(\frac{(0.05)(K_3)(S/1.5)}{(PE/100)^2}\right.$ lb/ton material loaded out$\left.\right)$			

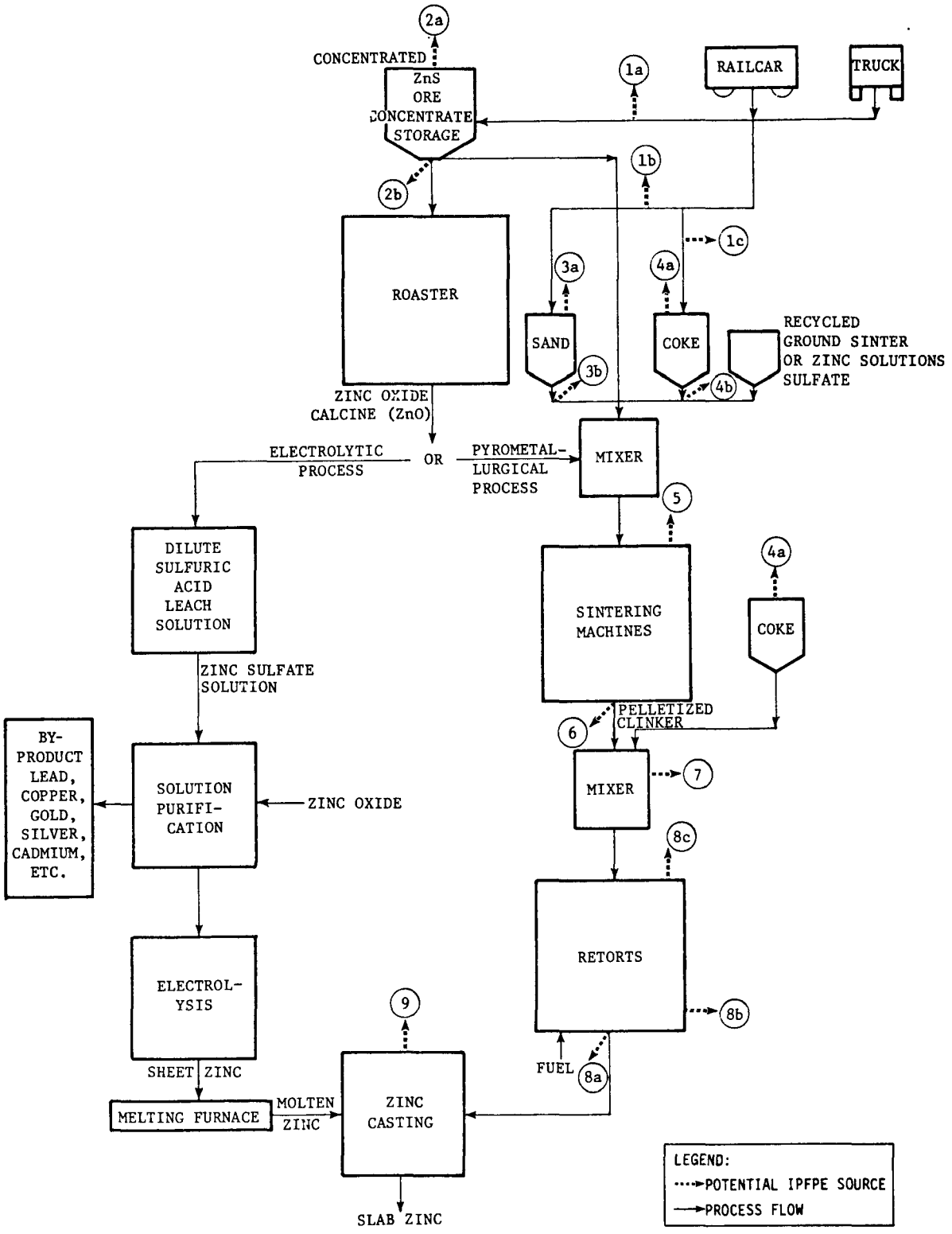

Figure 2-10. Process flow diagram for primary zinc production showing potential industrial process fugitive emission points.

and hardness of the sinter mass. The pelletized clinker from the sintering process is mixed with coke (used as the reducing agent) and reduction of the ore to metallic zinc occurs in a retort furnace. When the retort is charged, its mouth is fitted with a condenser made of refractory material and the furnace is heated to about 1300°C (2370°F). The zinc vapor escapes from the retort and is collected in the condenser as liquid metal. The process takes about twenty hours and after completion, the molten zinc is transferred to the casting area where it is poured into molds.

A process flow diagram for primary zinc production is shown in Figure 2-10. Each potential process fugitive particulate emission is identified and explained in Table 2-27. A dust source common to zinc production facilities but not specifically included in the Figure or Table, is plant roads. Proper evaluation of this category is explained in Section 2.1.

IPFPE Emission Rates - Table 2-27 presents a summary of uncontrolled emission factors for the primary zinc production IPFPE sources. Since these are potential uncontrolled emission rates, the site-specific level of control must be considered for application to a specific plant. Also included are reliability factors for each estimate.

The emission factors for the sources aside from storage and handling of raw material were derived from similar operations of other non-ferrous industries (lead and copper) and therefore have received a reliability rating of "E" which indicates at best an order of magnitude estimate. Consequently, actual emission rates at a given facility could differ significantly from those in Table 2-27.

Roaster operations at primary zinc facilities generally are not a source of fugitive emissions and for this reason are not discussed or listed in this particular section.[12]

2.3.4 Primary Zinc Production

Process Description - The ore is usually concentrated at the mine and transported to the plant for further processing. Several different combinations of processes are used by zinc smelters to prepare the ore concentrates for extraction of zinc. In every case the process must be preceded by complete roasting to convert zinc sulfide into zinc oxide and thereby make it leachable or reducible with carbon. The most common process in zinc production is electrolytic recovery. Pyrometallurgical production of zinc using a vertical retort furnace is practiced at only one plant in the United States.[1]

The electrolytic recovery of zinc from the roasted ore involves the following steps:

- Dissolving (leaching) the roasted ore in dilute sulfuric acid to form a zinc sulfate solution.
- Removal of impurities from the solution (purification).
- Electrolysis of the zinc sulfate by passage of a current from an insoluble anode to an insoluble cathode upon which the zinc metal is deposited.

The anodes are usually made of lead and the cathodes are rolled aluminum sheets. At regular intervals the cathodes are removed and the deposited zinc stripped from each side. The stripped sheets are melted in a furnace and finally transferred to the casting area where they are cast into slabs.

In the pyrometallurgical process, the roasted ore is agglomerated by sintering. Feed for the sintering machine is a mixture consisting of calcine or concentrates, recycled ground sinter and the required amount of carbonaceous fuel (usually coal or coke). Silica is added to increase strength

8. Iversen, R.E. Meeting with U.S. Environmental Protection Agency and AISI on Steel Facility Emission Factors. April 14 and 15, 1976. U.S. Environmental Protection Agency Memorandum. June 7, 1976.

9. Speight, G.E. Best Practicable Means in the Iron and Steel Industry. The Chemical Engineer. March 1973.

10. Personal Communications. Mr. S. Norman Kesten, Assistant to the Vice-President, Environmental Affairs, ASARCO to Mr. Donald R. Goodwin, U.S. Environmental Protection Agency, Emission Standards and Engineering Division, Research Triangle Park, North Carolina. January 17, 1977.

11. Environmental Assessment of the Domestic Primary Copper, Lead, and Zinc Industry, Volume I (Draft). PEDCo-Environmental Specialists, Inc. Prepared for U.S. Environmental Protection, Industrial Environmental Research Laboratory. Contract No. 68-02-1321, Task Order No. 38. Cincinnati, Ohio. September 1976.

12. Control Techniques for Lead Air Emissions (Draft Final Report). PEDCo-Environmental Specialists, Inc. Prepared for U.S. Environmental Protection Agency, Emission Standards and Engineering Division. Contract No. 68-02-1375, Task Order No. 32. Research Triangle Park, North Carolina. October 1976.

13. Preferred Standards Path Analysis on Lead Emissions From Stationary Sources, Volume I. U.S. Environmental Protection Agency, Emission Standards and Engineering Division. Research Triangle Park, North Carolina. September 14, 1974.

14. Personal Communication. James C. Caraway, Texas Air Control Board, Austin, Texas to PEDCo Environmental, Cincinnati, Ohio. October 6, 1976.

REFERENCES FOR SECTION 2.3.3

1. Open Dust Sources Around Iron and Steel Plants, Draft. Midwest Research Institute. Prepared for U.S. Environmental Protection Agency, Industrial Environmental Research Laboratory. Contract No. 68-02-2120. Research Triangle Park, North Carolina. November 2, 1976.

2. Shannon, L.J. and P.G. Gorman. Particulate Pollutant System Study, Vol. III - Emission Characteristics. Midwest Research Institute. Prepared for U.S. Environmental Protection Agency. Contract No. 22-69-104. 1971.

3. Vandegrift, A.E. and L.J. Shannon. Handbook of Emissions, Effluents, and Control Practices for Stationary Particulate Sources. Midwest Research Institute. Prepared for U.S. Environmental Protection Agency. Contract No. CPA 22-69-104. November 1, 1970.

4. Gutow, B.S. An Inventory of Iron Foundry Emissions. Modern Casting. January 1972.

5. Personal Communication from Gary McCutchen, U.S. Environmental Protection Agency, Office of Air Quality Planning and Standards, Research Triangle Park, North Carolina to Midwest Research Institute, Kansas City, Missouri. February 1976.

6. Transmittal from the American Iron and Steel Institute to Mr. Don Goodwin, U.S. Environmental Protection Agency, Office of Air Quality Planning and Standards, Research Triangle Park, North Carolina. Data contained in table entitled Source Data for Steel Facility Factors. July 13, 1976.

7. Silver Valley/Bunker Hill Smelter Environmental Investigation, Interim Report. PEDCo-Environmental Specialists, Inc. Contract No. 68-02-1343, Task Order No. 8. Cincinnati, Ohio. February 1975.

prevent upset and thus fugitive emissions. Enclosure of the blast furnace with subsequent ventilation to control equipment will effectively control fugitive emissions but space may be a limiting factor.[13]

Confinement by enclosure will effectively control fugitive emissions from slag while cooling. However, if the volume of slag is small enough so as to allow use of a hood, this may be more desirable if it can be vented to an existing fabric filter system. It may also be possible to apply such a system to buildings housing zinc fuming furnaces. Since a fabric filter is the product collector for zinc fuming furnace it may therefore be more desirable to employ a good hooding system rather than enclosure.[14]

Wet suppression will effectively control fugitive emissions from slag granulation and piling after it has cooled. If, however, the slag is still hot during this operation confinement by enclosure is more desirable since wet suppression may only generate more fugitive emissions.

Fugitive emissions from dross kettles can be controlled by use of fixed or movable hoods (depending on space limitation) with subsequent venting to a fabric filter.

this will prevent the initial generation of fugitive emissions. However, if fugitive emissions are a result of poorly maintained equipment, faulty seals, worn equipment, etc. replacement of necessary parts and/or improved maintenance schedules will be necessary to eliminate fugitive emissions. Increased exhaust rate of the primary collection system may reduce leakage, however this may not be a desirable method of control if ambient air is drawn into the furnace or sinter machine.

Fugitive emissions from sinter machine discharge and screening as well as sinter crushing can be effectively controlled in several ways. The simplest way is to control operating parameters and procedures such as not overloading the process to the point where excessive fugitive emissions may be generated. Because of the nature of such operations, however, it may be necessary to completely enclose the operations, evacuate the building, or install fixed hoods which can be vented to fabric filters. In the same manner, fugitive emissions from the silver retort building may also be controlled by means of building evacuation to a fabric filter. Confinement and evacuation of the sinter dump area may also be integrated into this control system.

Fugitive emission from blast furnace charging and tapping, lead and slag pouring, and lead casting are most effectively controlled by the use of movable or fixed hoods, depending upon space limitations, with subsequent venting to a fabric filter system. Fugitive emission from the blast furnace blow condition can normally be controlled through sinter quality control and proper sinter/coke ratios to maintain a smoothly running blast furnace operation. Upsets in the blast furnace can be minimized by use of quality materials and/or improvement of operating procedures to

Table 2-26 (continued). CONTROL TECHNIQUES FOR PRIMARY LEAD SMELTING IPFPE SOURCES

Industry: Primary Lead Smelting	Negligible emissions	IPFPE source typically uncontrolled	FUGITIVE EMISSIONS CAPTURE AND CONTROL METHODS														
				Preventative procedures and operating changes							Capture methods				Removal equipment		
			Control technologies identified in Section 2.1	Wet suppression (water and/or chemical)	Confinement by enclosure	Better control of raw material quality	Better control of operating parameters and procedures	Improved maintenance and/or construction program	Increase exhaust rate of primary control system		Fixed hoods, curtains, partitions, covers, etc.	Movable hoods with flexible ducts	Closed buildings with evacuation		Fabric filter	Scrubber	ESP
8. Mixing and pelletizing					o								o		o		
9. Sinter machine updraft exhaust leakage							o	o	o				+		+		
10. Sinter return handling					o										+		
11. Sinter machine discharge and screens					x		x	x			o		o		o		
12. Sinter crushing					x		x	x			o		o		o		
13. Sinter transfer to dump area					o		o										
14. Sinter product dump area					+								+		+		
15. Charge car or conveyor loading and transfer of sinter					+		x										
16. Blast furnace - monitor (total)																	
16a. Charging											o	o			o		
16b. Blow condition						x	x	x									
16c. Upset						x	x										
16d. Tapping											o	o			o		
17. Lead pouring to ladle and transfer											o	o			o		
18. Slag pouring											o	o			o		
19. Slag cooling		✓			+						+		+		+		
20. Slag granulator and slag piling		✓		+	+												
21. Zinc fuming furnace vents		✓								+			+		+		
22. Dross kettle											o	o			o		
23. Reverberatory furnace leakage							x	o									
24. Silver retort building		✓											+		+		
25. Lead casting											o	o			o		

x Typical control technique.

o In use (but not typical) control technique.

+ Technically feasible control technique.

Table 2-26. CONTROL TECHNIQUES FOR PRIMARY LEAD SMELTING IPFPE SOURCES

Industry: Primary Lead Smelting	Negligible emissions	IPFPE source typically uncontrolled	FUGITIVE EMISSIONS CAPTURE AND CONTROL METHODS													
				Preventative procedures and operating changes							Capture methods				Removal equipment		
			Control technologies identified in Section 2.1	Wet suppression (water and/or chemical)	Confinement by enclosure	Better control of raw material quality	Better control of operating parameters and procedures	Improved maintenance and/or construction program	Increase exhaust rate of primary control system		Fixed hoods, curtains, partitions, covers, etc.	Movable hoods with flexible ducts	Closed buildings with evacuation		Fabric filter	Scrubber	ESP
1. Railroad car and truck unloading																	
1a. Limestone			✓														
1b. Silica sand			✓														
1c. Lead ore concentrate			✓														
1d. Iron ore			✓														
1e. Coke			✓														
2. Blast furnace flue dust																	
2a. Storage	✓																
2b. Handling and transfer	✓																
3. Limestone																	
3a. Storage		✓	✓														
3b. Handling and transfer		✓	✓														
4. Silica sand																	
4a. Storage		✓	✓														
4b. Handling and transfer		✓	✓														
5. Lead ore concentrate																	
5a. Storage		✓	✓														
5b. Handling and transfer		✓	✓														
6. Iron ore																	
6a. Storage		✓	✓														
6b. Handling and transfer		✓	✓														
7. Coke																	
7a. Storage		✓	✓														
7b. Handling and transfer		✓	✓														

x Typical control technique.

o In use (but not typical) control technique.

+ Technically feasible control technique.

Control Technology - Control technology options for the primary lead production IPFPE sources (except those covered in Section 2.1) are presented in Table 2-26 and are explained in further detail below.

Storage, handling, and transfer of the raw materials used in primary lead production as well as process transfer operations can be effectively controlled by either wet suppression (water and/or chemical) or confinement by enclosure. Wet suppression is the least desirable method since the resultant higher moisture content of the raw materials may necessitate increased energy requirements in further process steps which require low moisture content materials. Confinement by enclosure can be accomplished in several ways. Complete enclosure of a storage area may not be necessary, rather a three-sided structure (with or without roof) which protects against the predominate wind direction may adequately control fugitive emissions. Handling and transfer equipment such as conveyor belts can be covered or enclosed to prevent fugitive emissions during such operations. Since blast furnace flue dust is normally collected in a closed system, fugitive emissions are normally negligible.

Fugitive emissions from mixing and pelletizing can be controlled if these operations are enclosed to prevent particulate escape. However, if this is not practicable because of limited space, building evacuation to a baghouse can be used to control fugitive emissions.

Fugitive emissions resulting from leakage of sinter machine updraft exhaust and reverberatory furnaces may be effectively controlled by better control of operating parameters and procedures. For instance, if proper feed rates and operational checks are adhered to properly, often times

Table 2-25. CONCENTRATIONS OF LEAD, CADMIUM, AND ZINC IN FUGITIVE PARTICULATE EMISSIONS OF VARIOUS PRIMARY LEAD SMELTING OPERATIONS

Process	Percent by weight		
	Lead	Cadmium	Zinc
Ore concentrate storage	37	0.8	8
Return sinter transfer	19	0.6	2
Sinter sizes and storage	58	0.7	5
Sinter product dump area	31	0.6	6
Sinter transfer to blast furnace	39	0.7	6
Blast furnace roof vents	47	0.4	8
Blast furnace upset	27	4.0	7
Lead refinery roof vents	37	0.3	19
Lead casting roof ducts	38	0.1	18
Zinc fuming furnace area	3	-	62

Source: Reference 7.

Note: In the near future Midwest Research Institute will complete a lead control techniques document with further information on lead concentrations.

Little information is available concerning fugitive particulate emissions from the sintering operation except that exit temperatures from leakage and fumes are 120-315°C (250°-600°F).[3] Table 2-25 lists the percent of lead, cadmium, and zinc contained in fugitive particulate emissions from various sintering operations.[7] The following is a listing of size distributions of flue dust from an updraft sintering machine effluent.[11] Though these are not fugitive emissions, the size distributions may closely resemble those of the fugitive emissions.

Size (μm)	Percent by weight
20-40	15-45
10-20	9-30
5-10	4-19
<5	1-10

Particulate fugitive emissions from the blast furnace consist basically of lead oxides, 92 percent of which are less than 4 μm in size.[3] Effluents from the flues consist of oxides as well as sulfates, sulfide, chloride, fluoride, and coke dust all of which may well be contained in the fugitive emissions.[11] Table 2-25 lists the percentage of lead, cadmium and zinc contained in fugitive particulate emissions from blast furnace roof vents and from blast furnace upset conditions.[7]

Information concerning fugitive particulate emission from lead dross reverberatory is unavailable; however, the following data on uncontrolled exhaust gas is presented since it may closely parallel fugitive emission characteristics. Particulates are largely less than 1 μm with a lead content of 13-35 percent by weight. Exit temperatures are 760-980°C (1400-1800°F).[12]

° Sinter Machine Feed

1.5 Mg (1.65 tons) of ore concentrate
0.4 Mg (0.44 tons) of flux (limestone)
0.2 Mg (0.22 tons) of coke

° Blast Furnace Feed

1.7 Mg (1.8 tons) of sinter
0.3 Mg (0.33 tons) of coke
0.1 Mg (0.11 tons) of slag (dross)
0.02 Mg (0.022 tons) of silica
0.02 Mg (0.022 tons) of limestone
0.02 Mg (0.022 tons) of baghouse dust
0.2 Mg (0.22 tons) of iron ore

Not included in the inventory are fugitive emissions from plant haul roads. These sources may be calculated using procedures outlined in Section 2.1. Total model plant uncontrolled process fugitive particulate emissions are 4532 Mg (4985 tons) per year. Fugitive emissions from upset conditions are not included in this total since it cannot be predicted how often upset conditions will occur during a year's operation. Major sources of fugitive particulate emissions are sintering operations, lead ore concentrate handling and transfer, and zinc fuming furnace vents.

Characteristics of Fugitive Emissions - Fugitive particulate emissions from primary lead smelting consist basically of dust from the various stockpiles as well as metal oxides from the various smelter process operations. Ninety-six percent of fugitive coke dust from stockpiling, handling, and transfer has a mean particulate diameter of less than 47 μm. Seven percent of silica dust from stockpiling, handling, and transfer of sand is less than 75 μm and 80 percent is greater than 5 μm. Limestone dust from stockpiling, handling, and transfer has a mean particulate diameter of 3-6 μm of which 45-70 percent is less than 5 μm.[3]

Table 2-24 (continued). IDENTIFICATION AND QUANTIFICATION OF POTENTIAL FUGITIVE PARTICULATE EMISSION POINTS FOR PRIMARY LEAD SMELTERS

Source of IPFPE	Uncontrolled fugitive emission factor	Emission factor reliability rating	Model plant fugitive emission inventory	
			Operating parameter, Mg/yr (tons/year)	Uncontrolled emissions Mg/yr (tons/yr)
23. Reverberatory furnace leakage	0.75-2.25 kg/Mg lead[j] (1.5-4.5 lb/ton lead)	D	Lead produced 200,000 (220,000)	300 (330)
24. Silver retort building	0.45-1.35 kg/Mg lead[j] (0.9-2.7 lb/ton lead)	D	Lead produced 200,000 (220,000)	180 (198)
25. Lead casting	0.22-0.66 kg/Mg lead[j] 0.43-1.30 lb/ton lead)	D	Lead produced 200,000 (200,000)	88 (96)

[a] Engineering judgement based on data presented in Section 2.1.2; emission range derived using emission factors for unloading of Taconite pellets and coal/hopper car; emission factor for coke derived from coal unloading emission factor only.

[b] Engineering judgement, assumed enclosed handling and storage or direct recycle to system.

[c] For complete development of this emission factor, refer to Section 2.1.4. The emission factor for sources 4a, 5a, 6a, and 7a are the same as source 3a. For sources 3a, 4a, and 5a it was assumed that S = 1.5, D = 90, PE = 100, and K_1, K_2, and K_3 = 1. Values for sources 6 and 7 can be found in Section 2.1.4. Reference 1.

[d] Engineering judgment, assumed 50 percent of coal handling emissions as reported in Reference 2.

[e] Engineering judgment based on aggregate storage pile emission factors in Reference 2.

[f] Reference 3.

[g] Reference 4.

[h] Engineering judgment; calculated from emission factor (0.055 kg/Mg of iron) given in Reference 5.

[i] Reference 6.

[j] Reference 7.

[k] Engineering judgment using steel sinter machine leakage emission factor given in Reference 8 and 9.

[l] Emissions for sinter crushing included in emissions from sinter machine discharge and screens.

[m] Emissions for charging, blow condition, and tapping included in total.

[n] Emission factor for upset not considered part of normal operating conditions and is not included in emission factor for the blast furnace roof monitor.

[o] Emissions for blast furnace upset are not included in model plant inventory.

[p] Emissions for slag pouring included in lead pouring to ladle and transfer emission.

[q] Engineering judgment; estimated to be one half the magnitude of pouring and ladling operations (source number 17).

[r] Granulated slag is wet and therefore most likely not a source of fugitive emissions. Reference 10.

Table 2-24 (continued). IDENTIFICATION AND QUANTIFICATION OF POTENTIAL FUGITIVE PARTICULATE EMISSION POINTS FOR PRIMARY LEAD SMELTERS

Source of IPFPE	Uncontrolled fugitive emission factor	Emission factor reliability rating	Model plant fugitive emission inventory	
			Operating parameter, Mg/yr (tons/year)	Uncontrolled emissions Mg/yr (tons/yr)
15. Charge car or conveyor loading and transfer of sinter	0.13-0.38 kg/Mg charged[j] (0.25-0.75 lb/ton charged)	D	Blast furnace charge 477,226 (524,949)	122 (131)
16. Blast furnace - monitor (total)	0.04-0.12 kg/Mg lead produced[j,m] (0.08-0.23 lb/ton)	D	Lead produced 200,000 (220,000)	16 (17)
16a. Charging	m			m
16b. Blow condition	m			m
16c. Upset[n]	3.5-11.5 kg/Mg lead produced[j,m] (7.0-23.0 lb/ton)	D		o
16d. Tapping	m			m
17. Lead pouring to ladle and transfer	0.47 kg/Mg lead produced[f] (0.93 lb/ton lead produced)	E	Lead produced 200,000 (220,000)	94 (102)
18. Slag pouring	p			p
19. Slag cooling	0.24 kg/Mg lead produced[q] (0.47 lb/ton lead produced)	E	Lead produced 200,000 (220,000)	48 (52)
20. Slag granulator and slag piling	Negligible[r]	E	Slag crushed 200,000 (220,000)	200 (220)
21. Zinc fuming furnace vents	1.15-3.45 kg/Mg lead[j] (2.3-6.9 lbs/ton lead)	D	Lead produced 200,000 (220,000)	460 (506)
22. Dross kettle	0.12-0.36 kg/Mg lead[j] (0.24-0.72 lb/ton lead)	D	Lead produced 200,000 (220,000)	48 (53)

Table 2-24 (continued). IDENTIFICATION AND QUANTIFICATION OF POTENTIAL FUGITIVE PARTICULATE EMISSION POINTS FOR PRIMARY LEAD SMELTERS

Source of IPFPE	Uncontrolled fugitive emission factor	Emission factor reliability rating	Model plant fugitive emission inventory	
			Operating parameter, Mg/yr (tons/year)	Uncontrolled emissions Mg/yr (tons/yr)
8. Mixing and pelletizing	0.57-1.70 kg/Mg lead product[j] (1.13-3.39 lb/ton lead product)	D	Lead produced 200,000 (220,000)	227 (247)
9. Sinter machine	0.12-0.55 kg/Mg sinter[k] (0.25-1.1 lb/ton sinter)	E	Sinter produced 349,979 (384,977)	117 (130)
10. Sinter return handling	2.25-6.75 kg/Mg sinter[j] (4.5-13.5 lb/ton sinter)	D	Sinter produced 349,979 (384,977)	1,575 (1,732)
11. Sinter machine discharge and screens	0.28-1.22 kg/Mg sinter[k] (0.55-2.45 lb/ton sinter)	E	Sinter produced 349,979 (384,977)	262 (289)
12. Sinter crushing	1			1
13. Sinter transfer to dump area	0.05-0.15 kg/Mg sinter transfered[j] (0.10-0.30 lb/ton sinter transfered)	D	Sinter transfered 349,979 (384,977)	35 (38)
14. Sinter product dump area	0.0025-0.0075 kg/Mg sinter dumped[j] (0.005-0.015 lb/ton sinter dumped)	D	Sinter dumped 349,979 (384,977)	2 (2)

Table 2-24 (continued). IDENTIFICATION AND QUANTIFICATION OF POTENTIAL FUGITIVE PARTICULATE EMISSION POINTS FOR PRIMARY LEAD SMELTERS

Source of IPFPE	Uncontrolled fugitive emission factor	Emission factor reliability rating	Model plant fugitive emission inventory	
			Operating parameter, Mg/yr (tons/year)	Uncontrolled emissions Mg/yr (tons/yr)
5. Lead ore concentrate				
5a. Storage	c	D	Concentrate stored 317,782 (349,560)	52 (57)
5b. Handling and transfer	0.82-2.5 kg/Mg handled[f] (1.64-5.0 lb/ton handled)	E	Concentrate handled 317,782 (349,560)	528 (580)
6. Iron ore				
6a. Storage	c	D	Ore stored 45,000 (49,500)	29 (32)
6b. Handling and transfer	1.0 kg/Mg iron ore handled[g] (2.0 lb/ton iron ore handled)	E	Ore handled 45,000 (49,000)	45 (49)
7. Coke				
7a. Storage	c	D	Coke stored 94,494 (103,943)	7 (8)
7b. Handling and transfer	0.06-0.1 kg/Mg coke handled[h,i] (0.13-3.39 lb/ton coke handled)	E	Coke handled 94,494 (103,943)	8 (9)

Table 2-24 (continued). IDENTIFICATION AND QUANTIFICATION OF POTENTIAL FUGITIVE PARTICULATE EMISSION POINTS FOR PRIMARY LEAD SMELTERS

Source of IPFPE	Uncontrolled fugitive emission factor	Emission factor reliability rating	Model plant fugitive emission inventory	
			Operating parameter, Mg/yr (tons/year)	Uncontrolled emissions Mg/yr (tons/yr)
Vehicular traffic	$\frac{(0.065)(K_2)(S/1.5)}{(PE/100)^2}$ kg/Mg material stored[c] $\left(\frac{(0.04)(K_2)(S/1.5)}{(PE/100)^2}\right.$ lb/ton material stored$\left.\right)$	D	Limestone stored 79,445 (87,390)	5 (6)
Loading out	$\frac{(0.025)(K_3)(S/1.5)}{(PE/100)^2}$ kg/Mg material loaded out[c] $\left(\frac{(0.05)(K_3)(S/1.5)}{(PE/100)^2}\right.$ lb/ton material loaded out$\left.\right)$	D	Limestone loaded out 79,445 (87,390)	2 (2)
Wind erosion	$\frac{(0.055)(S/1.5)}{(PE/100)^2}\ \frac{D}{90}$ kg/Mg material stored[c] $\left(\frac{(0.011)(S/1.5)}{(PE/100)^2}\ \frac{D}{90}\right.$ lb/ton material stored$\left.\right)$	D	Limestone stored 79,445 (87,390)	4 (4)
3b. Handling and transfer	0.1 kg/Mg limestone handled[d] (0.2 lb/ton limestone handled)	E	Limestone handled 79,445 (87,390)	8 (9)
4. Silica sand				
4a. Storage	c	D	Silica stored 3,500 (3,850)	1 (1)
4b. Handling and transfer	0.15 kg/Mg silica sand handled[e] (0.3 lb/ton silica sand handled)	E	Silica handled 3,500 (3,850)	1 (1)

Table 2-24. IDENTIFICATION AND QUANTIFICATION OF POTENTIAL FUGITIVE PARTICULATE EMISSION POINTS FOR PRIMARY LEAD SMELTERS

Source of IPFPE	Uncontrolled fugitive emission factor	Emission factor reliability rating	Model plant fugitive emission inventory	
			Operating parameter, metric tons/year (tons/year)	Uncontrolled emissions metric tons/yr (tons/yr)
1. Railroad car and truck unloading				
Limestone	0.015-0.2 kg/Mg unloaded[a] (0.03-0.4 lb/ton unloaded)	E	Limestone unloaded 79,445 (87,390)	8 (9)
Silica sand	0.015-0.2 kg/Mg unloaded[a] (0.03-0.4 lb/ton unloaded)	E	Silica unloaded 3,500 (3,850)	0.38 (0.41)
Lead ore concentrate	0.015-0.2 kg/Mg unloaded[a] (0.03-0.4 lb/ton unloaded)	E	Lead ore unloaded 317,782 (349,560)	34 (37)
Iron ore	0.015-0.2 kg/Mg unloaded[a] (0.03-0.4 lb/ton unloaded)	E	Iron ore unloaded 45,000 (49,500)	5 (6)
Coke	0.2 kg/Mg unloaded[a] (0.4 lb/ton unloaded)	E	Coke unloaded 94,494 (103,943)	19 (21)
2. Blast furnace flue dust				
2a. Storage	Negligible[b]	E	-	b
2b. Handling and transfer	Negligible[b]	E	-	b
3. Limestone				
3a. Storage				
Loading onto pile	$\frac{(0.02)(K_1)(S/1.5)}{(PE/100)^2}$ kg/Mg material loaded onto pile[c]	D	Limestone loaded 79,445 (87,390)	2 (2)
	$\left(\frac{(0.04)(K_1)(S/1.5)}{(PE/100)^2}\right.$ lb/ton material loaded onto pile$\left.\right)$			

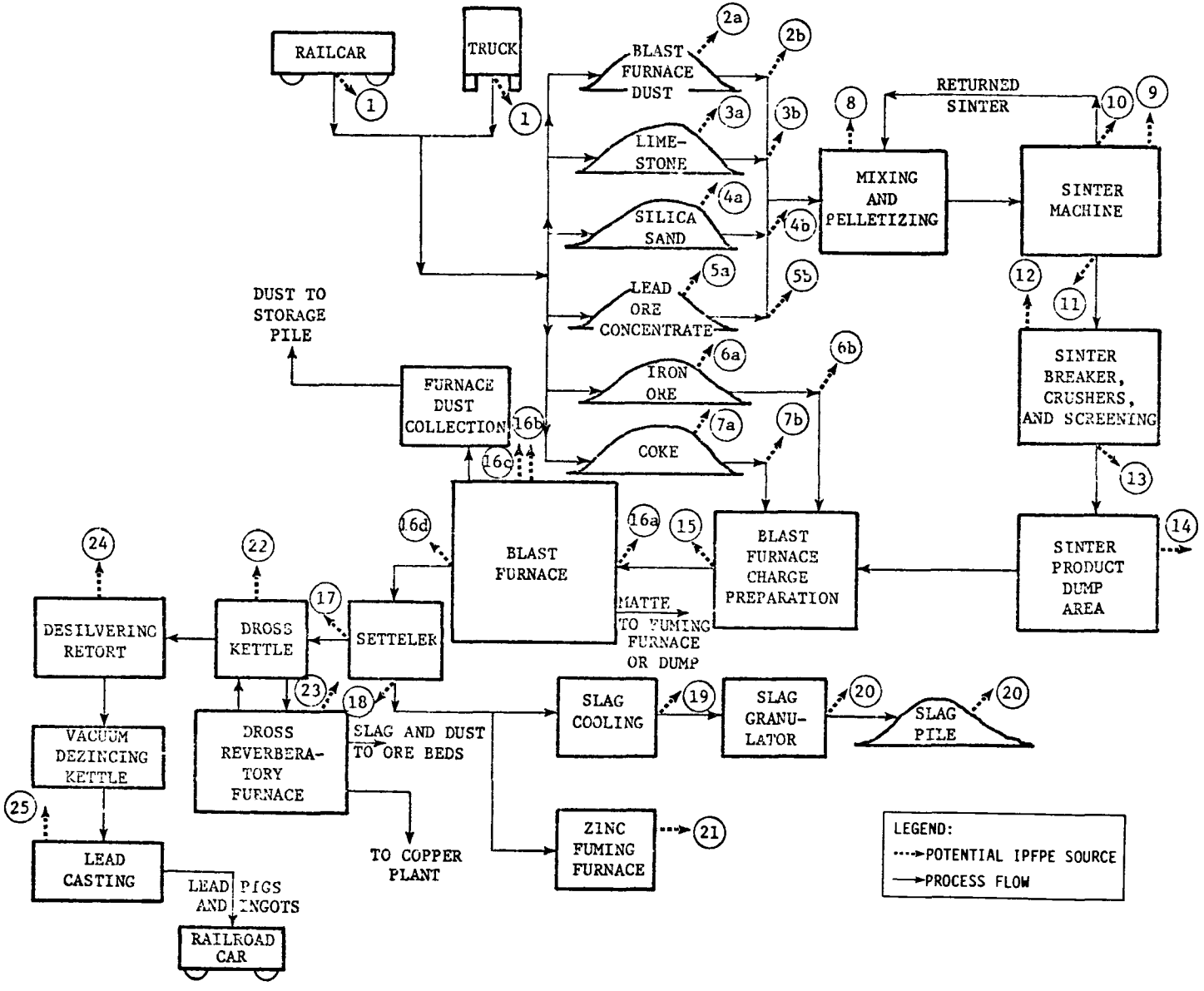

Figure 2-9. Process flow diagram for primary lead smelting showing potential industrial process fugitive particulate emission points.

A process flow diagram for lead production is shown in Figure 2-9. Each potential process fugitive particulate emission point is identified and explained in Table 2-24. Plant haul roads which are a common source at most facilities are not depicted in the Table or Figure. Proper evaluation of this emission category is explained in Section 2.1.

IPFPE Emission Rates - Table 2-24 presents a summary of uncontrolled emission factors for primary lead smelting IPFPE sources. Since these are potential uncontrolled emission rates, the site-specific level of control must be considered for application to a specific plant. Also included are reliability factors for each estimate.

The emission factors for the various smelting operations (other than storage pile) are based mostly on very limited test data and therefore receive a reliability rating of D. Consequently, actual emission rates at a given facility could differ significantly from those in Table 2-24.

Midwest Research Institute is presently conducting fugitive emission tests on lead smelters. Data should be available in several months.

Example Plant Inventory - The example plant inventory for primary lead smelting as shown in Table 2-24 presents potential fugitive particulate emission quantities from the various uncontrolled sources within the process. The inventory represents a plant which produces 200,000 Mg (220,000 tons) of lead per year. The plant inventory is not meant to display a typical plant, but merely a potential set of circumstances.

The assumed feed rate of raw materials to produce 1 Mg of lead was as follows:

In the drossing kettles, the molten bullion is cooled to 370 to 480°C (700 to 900°F) at which point copper and other impurities which are soluble in hotter bullion, but not at this temperature, rise to the surface and are skimmed off.

The copper drosses are transferred to a reverberatory furnace where they are melted with pig iron and silica sand. After melting is complete, four layers are usually present. They are from top to bottom: slag, matte, speiss, and molten lead. The slag is returned to the blast furnace for re-smelting, the matte and speiss are shipped to copper plants for recovery of copper and the lead bullion is returned to the drossing kettle. Arsenic is recovered at only one copper smelter in the United States.

The lead metal is heated to approximately 540°C (1000°F) and charged with zinc. The solution is agitated and allowed to cool. Silver crusts which form may be removed from the surface by skimming or by use of a vacuum press. These crusts then go to a retort furnace where the zinc is distilled off.

The remaining zinc must be removed from the molten lead. Vacuum dezincing is accomplished in a large kettle so designed that it is possible to form a vacuum over the metal surface. The zinc vaporizes in the vacuum chamber and condenses on the inner dome.

The refined lead is then pumped into casting kettles. Caustic soda and niter are agitated into the molten metal. The metal is allowed to stand and cool, which brings any contained impurities to the surface. Submerged pumps continually pump lead from the kettle bottom and it is cast into 100 lb pigs or 1 ton ingots.

2.3.3 Primary Lead Smelters

Process Description - Lead is usually found in nature as a sulfide ore (Galena - PbS) containing small amounts of copper, iron, zinc and other trace elements. Smelting is the process by which lead is separated from its ores and purified, and uses essentially three steps: sintering, reduction in a blast furnace, and refining.

The basic purpose of sintering is to convert the lead sulfide concentrate into an oxide or sulfate form, while simultaneously producing a hard porous clinker material suitable for the rigid requirements of the blast furnace. In order to maintain the desired level of sulfur content in the sinter, sulfide-free fluxes such as silica and limestone, plus large amounts of recycled sinter and smelter residues are added to the mix. The feed for the sinter machine is crushed and mixed, sometimes pelletized, and loaded onto the moving sinter machine pallets. The feed is then ignited, the lead sulfide converted to lead oxide, sulfur oxides are liberated, and sinter is formed. As the pallets turn over at the end of the machine, the sinter cakes go through a coarse breaker and screen.

Reduction of the lead oxide to metallic lead occurs in the blast furnace. The charge, consisting of sinter, coke, flux and slag forming materials are mixed and introduced into the blast furnace. During the melting process, the charge may separate into as many as four layers. From heaviest to lightest, the layers are: lead metal, matte, speiss and slag. The slag is removed and conveyed hot to a fuming furnace for recovery of lead and zinc. Some slag may be granulated and recycled to sintering. The matte, speiss, and lead bullion are transferred to drossing kettles where the lead dross (copper matte, speiss, and oxidized lead) copper oxides or sulfides, and some of the other impurities such as tin, indium and antimony are removed.

8. Control Technques for Lead Air Emissions. PEDCo-Environmental Specialists, Inc. Contract No. 68-02-1375. Draft Final Report. Cincinnati, Ohio. October 1976.

9. Development of Procedures for the Measurements of Fugitive Emissions, Vol. 1, Industrial Fugitive Emission Sources and Sampling Strategies. The Research Corporation of New England. Prepared for U.S. Environmental Protection Agency. Contract No. 68-02-1815.

10. Sulfuric Acid Plant Installation and Operating Costs - Phelps Dodge Corporation, Douglas, Arizona. PEDCo-Environmental Specialists, Inc. Prepared under Contract No. 68-02-1375, Task Order No. 34. Cincinnati, Ohio. September 1976. Draft.

11. Personal communication from Mr. K.W. Nelson, Vice-President, Environmental Affairs, ASARCO Incorporated to Mr. John M. Pratapos, U.S. Environmental Protection Agency, Economic Analysis Branch Strategies and Air Standards Division, Research Triangle Park, North Carolina. January 11, 1977.

12. Secondary Hooding for Peirce-Smith Converters. PEDCo Environmental, Inc. Prepared for U.S. Environmental Protection Agency, Industrial Environmental Research Laboratory. Contract No. 68-02-1321. Cincinnati, Ohio. December 1976.

13. Personal Communication from Phelps Dodge Corp., New York, New York to Don Goodwin, U.S. Environmental Protection Agency, Emission Standards and Engineering Division, Research Triangle Park, North Carolina. January 21, 1977.

REFERENCES FOR SECTON 2.3.2

1. Kalika, P.W. Development of Procedures for Measurement of Fugitive Emissions. The Research Corporation of New England. Prepared for U.S. Environmental Protection Agency. Contract No. 68-02-1815. July 1975.

2. Open Dust Sources Around Iron and Steel Plants, Draft. Midwest Research Institute. Prepared for U.S. Environmental Protection Agency, Industrial Environmental Research Laboratory. Contract No. 68-02-2120. Research Triangle Park, North Carolina. November 2, 1976.

3. Evaluation of the Controllability of Copper Smelters in the United States, Fugitive Emissions Section, Final Report Draft. Pacific Environmental Services, Inc. Prepared for U.S. Environmental Protection Agency. Contract No. 68-02-1354, Task Order No. 8. November 1974.

4. Personal communication from R.J. Kearney (Kennecott Copper Smelters) to R.D. Rovang. U.S. Environmental Protection Agency. Research Triangle Park, North Carolina. November 22, 1974.

5. Evaluation of Sulfur Dioxide and Arsenic Control Techniques for ASARCO - Tacoma Copper Smelter. PEDCo-Environmental Specialists, Inc. Prepared under Contract No. 68-02-1321, Task Order No. 35. Cincinnati, Ohio. July 1976. Draft.

6. Vandegrift, A.E. and L.J. Shannon. Handbook of Emissions, Effluents, and Control Practices for Stationary Particulate Pollution Sources. Midwest Research Institute. Prepared for: U.S. Environmental Protection Agency. Contract No. CPA 22-69-104. November 1, 1970.

7. Shannon, L.J. and P.G. Gorman. Particulate Pollutant System Study, Vol. III - Emissions Characteristics. Midwest Research Institute. Prepared for U.S. Environmental Protection Agency. Contract No. 22-69-104. 1971.

that only one converter will be in the roll-out position at any time. The required flow rate is approximately 225 m^3/sec (540,000 acfm) at 55°C (130°F), resulting in an air change every 4 to 6 minutes. The approximate cost is reported to be $7.3 million which includes enclosing the converter building, ducting, baghouse, and fans. This does not include $1.0 million needed for stack modifications. Annual power demands will cost approximately $308,000.[11] Another complete secondary control system for converter operations with a 38 m^3/sec (80,000 acfm) flow rate has been estimated at $1,154,000 to $6,774,000 for 1 to 9 converters respectively for capital cost. Annual operating costs are estimated from $292,000 to $1,752,000 for 1 or 9 converters respectively.[12]

The fire refining furnace can be hooded and ducted to controls. Estimates have been made of about $450,000 for the necessary hooding and ducting only.[5]

The slag pile dumping emissions are currently uncontrolled. To our knowledge, no smelter currently controls slag pile dumping emissions. An intermediate dumping site could be partially hooded and the fumes vented through a fabric filter or scrubbing system. (However at large facilities this may require extremely large hoods and air flow rates, making such a system impractical). Then the cooled slag would be conveyed to the long term slag disposal site. Such a system could capture 50 to 70 percent of the slag pile emissions. A very approximate cost estimated based on a 5.7 m^3/sec (12,000 acfm) installation would be about $220,000 considering the retrofit and site preparation problem.[5]

during this roll-out period, the stationary hood and vent system's fume capture efficiency is very low, since the converter opening is not under the hood.

Secondary hoods which capture the fumes during the roll-out operating mode would decrease fugitive emissions. For example, preliminary designs at one plant show that ventilation hoods, one per converter and each measuring 5 m (16 feet) in diameter, can be mounted above the roll-out position of the converter in such a manner to avoid interference with the crane. The hood would be elevated sufficiently to minimize interference with converter operation yet low enough to capture emissions during charging. All of the hoods would be connected to a common duct leading to a fabric filter system equipped with an induced draft fan, filter cleaning device, and dust hoppers. The hoods would be equipped with dampers geared to open at converter roll-out. Such a system sized for a total vent gas flow of 38 Nm^3/sec (80,000 scfm) is estimated to have an installed cost (1977 basis) of approximately $900,000 based on similar systems used in the steel industry.[5] The secondary hood system would have the advantage of obviating the need for general building ventilation. Also, better control of operating parameters and procedures, such as control of the converter blast air flow, can reduce fugitive emissions as the converter is tilted.[5]

Plans have been made at one plant to isolate the converter section of a building and evacuate the roof monitor to a fabric filter. The entire building contains three converters, two anode baking furnaces, and a reverberatory furnace. Partitions will be built into the roof trusses to isolate areas of the building. No hooding directly over the furnace will be added. The operation will be controlled so

Table 2-23. CONTROL TECHNIQUES FOR PRIMARY COPPER SMELTING IPFPE SOURCES

Industry: Primary Copper Smelting	Negligible emissions	IPFPE source typically uncontrolled	FUGITIVE EMISSIONS CAPTURE AND CONTROL METHODS														
				Preventative procedures and operating changes							Capture methods				Removal equipment		
			Control technologies identified in Section 2.1	Wet suppression (water and/or chemical)	Confinement by enclosure	Better control of raw material quality	Better control of operating parameters and procedures	Improved maintenance and/or construction program	Increase exhaust rate of primary control system		Fixed hoods, curtains, partitions, covers, etc.	Movable hoods with flexible ducts	Closed buildings with evacuation		Fabric filter	Scrubber	ESP
1. Unloading and handling of ore concentrates			✓														
2. Ore concentrate storage			✓														
3. Limestone and flux unloading and handling			✓														
4. Limestone flux storage			✓														
5. Roaster charging											+		+		o		o
6. Roaster leakage								o	o				+		o		o
7. Calcine transfer					o						o	o	+		o		o
8. Charging reverberatory furnace		✓									o	o	+		o		o
9. Tapping of reverberatory		✓									o	o	+		o		o
10. Reverberatory furnace leakage		✓						+			o	o	+		o		o
11. Slag tapping		✓									o	o	+		o		o
12. Converter charging		✓					o				+	+	+		+		
13. Converter leakage									x		+	+	+		+		
14. Slag tapping from converter		✓					o				+	+	+		+	+	+
15. Blister copper tapping		✓					o				+	+	+		+		
16. Blister copper transfer		✓									+	+	+		+		
17. Charging blister copper to fire refining furnace		✓										+	+		+		
18. Copper tapping and casting		✓										+	+		+		
19. Slag tapping and handling		✓										+	+		+		
20. Slag pile dumping and cooling		✓									+	+			+	+	

x Typical control technique.

o In use (but not typical) control technique.

+ Technically feasible control technique.

Control Technology - Control technology options for copper smelting IPFPE sources (except those covered in Section 2.1) are presented in Table 2-23 and are explained in more detail below.

One method to reduce fugitive emissions from roasters is to increase the draft of air through the roaster. The discharge of calcine from the roaster can be enclosed and vented to control equipment, as can conveyors transporting the calcine to the reverberatory furnace. If larry cars are used to transfer the calcine, they can be covered to reduce fugitive emissions. Roaster charging can be controlled by hood systems. Fabric filters or ESP's can be used as removal equipment.

Hood systems can be used to control reverberatory slag and metal tapping operations. Such a system (with baghouse) at a smelter with three reverberatory furnaces has been estimated to require a flow rate of 42 Nm^3/sec (90,000 scfm) and cost over $1,000,000.[10] At another plant, plans to control the converter slag return charge hole on the reverberatory furnace by installing a 14 m^3/sec (30,000 acfm) hood system ducted to an existing ESP are estimated to cost approximately $100,000.[5] Reverberatory leakage can be reduced by a comprehensive maintenance program. Increasing the flow rate of the primary system will decrease leaks but may also reduce the SO_2 concentration in the gas stream. This is a disadvantage if a flue gas desulfurization system is used.

During converter roll-out for charging and tapping, the primary hood system can be vented directly to a control device (baghouse or ESP), bypassing the acid plant. One plant exhausts approximately 24 m^3/sec (50,000 acfm) in this manner for a 90 Mg (100 ton) capacity furnace.[5] However,

Table 2-22. CHEMICAL CHARACTERISTICS OF FUGITIVE PARTICULATE EMISSIONS FROM VARIOUS PROCESS STEPS IN PRIMARY COPPER SMELTING

Process Step	Composition (Percent)									
	Cu	Fe	S	SiO_2	CaO	Zn	Cd	Pb	As	Other
Ore Concentrate Storage and Handling	28	24	32	11						5
Limestone Storage and Handling					~60					40
Slag Handling	0.5	40	1.5	38						20
Roaster Loading and Operation	5					16	0.5	18	60	0.5
Reverberatory Furnace Loading and Operation	5					16	0.5	18	60	0.5
Matte Transfer	42	32	25	1						
Converter Loading and Blowing	1					8	4	50	37	

Source: Reference 7.

3,770 Mg (4,147 tons) per year. Major sources of fugitive emissions are ore concentrate unloading, roaster operations, and converter operations.

Characterization of Fugitive Emissions - Fugitive particulate emissions from primary copper smelting consist basically of oxides and dust. Limestone dust emissions from stockpiling, handling, and transfer have a mean particulate diameter of 3-6 μm of which 45-70 percent is less than 5 μm. Five percent of the fugitive particulate emissions from roasting are less than 5 μm and have an exit temperature of about 300-480°C (600-890°F).[7] More extensive data concerning size characteristics of fugitive emissions from roasting are not available, however, presented here are additional characteristics of uncontrolled roaster exhaust gas which in all likelihood closely resemble the fugitive emission characteristics. Fifteen percent of the particulate in exhaust gas are less than 10 μm and 85 percent are greater than 10 μm. Lead content of the particulate is 0.5-12 percent by weight.[8]

Fugitive particulate emissions from reverberatory furnaces consist mostly of copper oxides of which 50 percent are less than a 37 μm mean diameter and have an exit temperature of 149-416°C (300-780°F). Little information is available concerning characteristics of fugitive emissions from converters except that 44 μm is the mean particulate diameter.[7]

Table 2-22 presents additional information concerning chemical composition of fugitive emissions from various process steps in primary copper smelting.

Copper oxides are the basic fugitive emissions from pouring and casting, 16 percent of which are less than 10 μm and 46 percent of which are less than the 74 μm mean diameter.[7]

source common to all copper smelters, but not specifically included in the Figure or Table, is plant roads. Proper evaluation of this category is explained in Section 2.1.

IPFPE Emission Rates - Table 2-21 presents a summary of uncontrolled emission factors for the copper production IPFPE sources. Since these are potential uncontrolled emission rates, the site-specific level of control must be considered when applied to a particular plant. Also included are reliability factors for each estimate.

The emission factors for the various smelting operations (other than storage piles) are based on material balance estimates. Therefore, these values received a reliability rating of "E", which indicates at best an order of magnitude estimate. Consequently, actual emission rates at a given facility could differ significantly from those in Table 2-21.

Example Plant Inventory - The example plant inventory for primary copper smelting as shown in Table 2-21 presents potential fugitive particulate emission quantities from the various uncontrolled sources within the process. The inventory represents a plant which produces 90,478 Mg (99,645 tons) of copper per year. The plant inventory is not meant to display a typical plant, but merely a potential set of circumstances.

The assumed feed rate of raw materials to produce 1 Mg of copper was as follows:

- 1.53 Mg (1.68 tons) of fluxes (limestone)
- 3.37 Mg (4.71 tons) of ore concentrate

Not included in the inventory are fugitive emissions from plant haul roads. There sources may be calculated using procedures outlined in Section 2.1. Total model plant uncontrolled process fugitive particulate emissions are

Table 2-21 (continued). IDENTIFICATION AND QUANTIFICATION OF POTENTIAL FUGITIVE PARTICULATE EMISSION POINTS FOR PRIMARY COPPER SMELTERS

Source of IPFPE	Uncontrolled fugitive emission factor	Emission factor reliability rating	Model plant fugitive emission inventory	
			Operating parameter, Mg/yr (tons/year)	Uncontrolled emissions Mg/yr (tons/yr)
11. Slag tapping	h			g
12. Converter charging	1.6-8.85 kg/Mg copper produced[d,i,j] (3.3-17.7 lb/ton)	E	Copper produced 90,478 (99,645)	545 (600)
13. Converter leakage	j			i
14. Slag tapping from converter	j			i
15. Blister copper tapping	j			l
16. Blister copper transfer	j			l
17. Charging blister copper to fire refining furnace	0.5-1.4 kg/Mg copper produced[i,m] (1.0-2.8 lb/ton)	E	Copper produced 90,478 (99,645)	86 (95)
18. Copper tapping and casting	1.26 kg/Mg copper produced[f,k] (2.52 lb/ton)	E	Copper produced 90,478 (99,645)	114 (126)
19. Slag tapping and handling	k			j

[a] Reference 1 also includes slag handling.

[b] Emission from limestone unloading and handling included in emission factor for ore unloading and handling.

[c] For complete development of this emission factor, refer to Section 2.1.4. The emission factor for source 4 is the same as source 2. For these examples it was assumed that S = 1.5, D = 90, PE = 100, and K_1, K_2, and K_3 = 1. Reference 2.

[d] Based on material balance using same percentage as estimated for SO_2 emissions from reference 3.

[e] Emissions from roaster leakage and transfer are included in emission factor for roaster charging.

[f] Reference 4.

[g] Lower value of range is for plants with roaster, high value for plants without roaster.

[h] Emissions from reverberatory tapping and leakage are included in emission factor for reverberatory charging.

[i] Reference 5.

[j] Emissions from converter leakage and tapping, and blister copper transfer are included with converter charging emission factor.

[k] Emissions from slag to tapping are included in casting building emissions.

[l] Engineering judgment, assumed approximately equal to 25 percent of the reverberatory furnace fugitive emissions.

[m] Reference 13.

Table 2-21 (continued). IDENTIFICATION AND QUANTIFICATION OF POTENTIAL FUGITIVE PARTICULATE EMISSION POINTS FOR PRIMARY COPPER SMELTERS

Source of IPFPE	Uncontrolled fugitive emission factor	Emission factor reliability rating	Model plant fugitive emission inventory	
			Operating parameter, Mg/yr (tons/year)	Uncontrolled emissions Mg/yr (tons/yr)
3. Limestone flux unloading and handling	b			b
4. Limestone flux storage	c	D	Limestone flux 138,700 (152,570)	23 (25)
5. Roaster charging	11.5 kg/Mg copper produced[d,e] (23 lb/ton)	E	Copper produced 90,478 (99,645)	1,040 (1,146)
6. Roaster leakage	e			e
7. Calcine transfer	e			e
8. Charging reverberatory furnace	4.15-4.35 kg/Mg copper produced[f,g,h] (8.3-8.7 lb/ton)	E	Copper produced 90,478 (99,645)	385 (423)
9. Tapping of reverberatory	h			g
10. Reverberatory furnace leakage	h			g

Table 2-21. IDENTIFICATION AND QUANTIFICATION OF POTENTIAL FUGITIVE PARTICULATE EMISSION POINTS FOR PRIMARY COPPER SMELTERS

Source of IPFPE	Uncontrolled fugitive emission factor	Emission factor reliability rating	Model plant fugitive emission inventory	
			Operating parameter, Mg/yr (tons/year)	Uncontrolled emissions Mg/yr (tons/yr)
1. Unloading and handling of ore concentrate	5 kg/Mg material handled[a,b] (10 lb/ton)	E	Ore concentrate 305,140 (336,165)	1,526 (1,681)
2. Ore concentrate storage				
Loading onto pile	$\frac{(0.02)(K_1)(S/1.5)}{(PE/100)^2}$ kg/Mg material loaded onto pile[c]	D	Ore concentrate loaded 305,140 (336,165)	6 (7)
	$\left(\frac{(0.04)(K_1)(S/1.5)}{(PE/100)^2}\right.$ lb/ton$\left.\right)$			
Vehicular traffic	$\frac{(0.065)(K_2)(S/1.5)}{(PE/100)^2}$ kg/Mg material stored[c]	D	Ore concentrate stored 305,140 (336,165)	20 (22)
	$\left(\frac{(0.13)(K_2)(S/1.5)}{(PE/100)^2}\right.$ lb/ton$\left.\right)$			
Loading out	$\frac{(0.025)(K_3)(S/1.5)}{(PE/100)^2}$ kg/Mg material loaded out[c]	D	Ore concentrate loaded out 305,140 (336,165)	8 (9)
	$\left(\frac{(0.05)(K_3)(S/1.5)}{(PE/100)^2}\right.$ lb/ton$\left.\right)$			
Wind erosion	$\frac{(0.055)(S/1.5)}{(PE/100)^2}\frac{D}{90}$ kg/Mg material stored[c]	D	Ore concentrate stored 305,140 (336,165)	17 (18)
	$\left(\frac{(0.11)(S/1.5)}{(PE/100)^2}\frac{D}{90}\right.$ lb/ton$\left.\right)$			

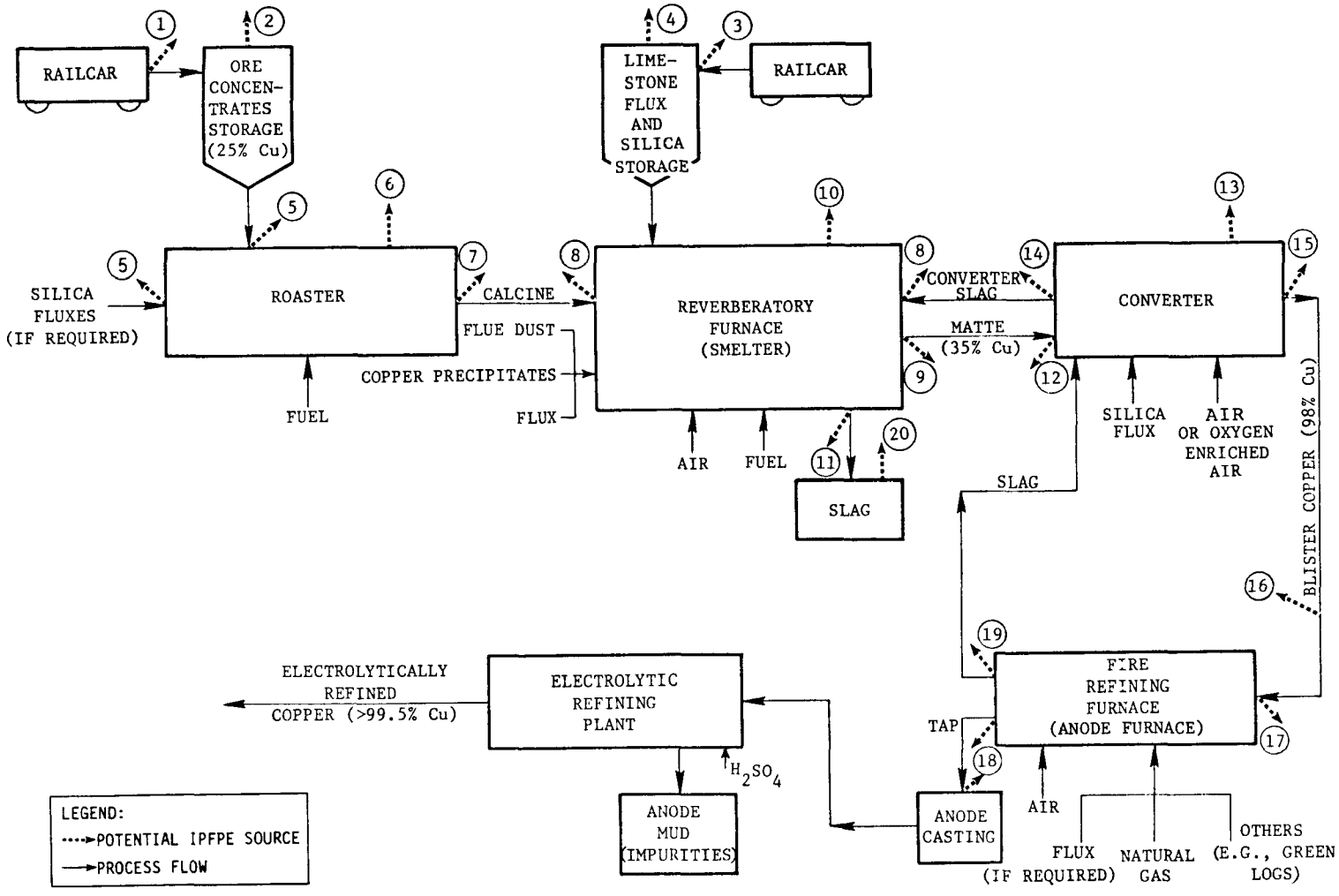

Figure 2-8. Process flow diagram for primary copper smelting showing potential industrial process fugitive emission points.

The third step in smelting is converting, in which the matte is concentrated to about 98 percent copper. Molten matte, silica flux, and scrap copper from other parts of the smelter are charged into the converter. Air is blown into the mixture removing SO_2 and creating blister copper, off-gases, and slag. The slag is returned to the reverberatory furnace for recovery of copper values. The off-gases contain dust and SO_2 and require cleaning and further treatment before discharge to the atmosphere.

The blister copper from the converter is further purified by fire refining. Air is forced into the molten metal bath, oxidizing impurities and some of the copper. Fluxes may be added to slag off other undesirable constitutents. When the copper oxide content reaches about one percent, the slag is skimmed. After the oxidation is complete, the bath is deoxidized with green logs or reformed gas. When this process, has reached the desired stage, the molten copper is poured into molds to make anodes for electrolytic refining.

At the electrolytic plant the anodes and cathodes (thin starting sheets of refined copper) are hung at carefully spaced intervals in lead or plastic-lined concrete cells containing the electrolyte solution. The electrolyte is essentially a solution of copper sulfates and sulfuric acid. Electric current is applied and copper is dissolved from the anode and enters the solution. At the same time, an equivalent amount of copper is plated out to the cathode. The impurities fall to the bottom of the tank as anode mud. These muds are later refined for their metals. The refined copper cathodes are sold as such or remelted and marketed as ingots, bars, wirebars, billets, and cakes.

A process flow diagram for primary copper smelting is shown in Figure 2-8. Each potential process fugitive emission is identified and explained in Table 2-21. A dust

2.3.2 Primary Copper Smelters

Process Description - Copper smelting is the process by which copper is separated from its ores and purified. The four steps in the process are roasting, smelting, converting and refining.

The sulfide ore concentrate may be roasted to remove part of the sulfur, to dry the concentrate, volatilize some of the impurities and preheat the material for charging in the reverberatory furnace. However, due to improvements in ore concentration and handling techniques, most smelters do not currently roast the ore concentrate. Of those that do, multiple-hearth furnaces in which a series of hearths are stacked one above another, or fluidized bed roasters are used.

There are several disadvantages to the use of roasters. Charging fine concentrates to roasters increases dust losses. The sulfur content of high grade concentrate is limited and all sulfur may be needed for the matte. The use of roasting is a high capital and operating expense.

After roasting, the calcine is transferred to the smelting furnace by cars. This furnace is an electric arc or reverberatory type. In addition to flue dust and copper precipitates, limestone and silica flux are added to help separate the copper from gangue materials. At the furnace temperature used, the copper combines readily with sulfur and any excess sulfur combines with iron in the charge. These cuprous and ferrous sulfides form a mixture called matte which separates by gravity from the slag. The slag contains the remaining iron in combination with flux materials. The slag is tapped from the furnace and discarded and the matte is withdrawn for transfer to converters.

8. Particulate and Fluoride Emissions Control, Anaconda Aluminum Company, Columbia Falls, Montana. PEDCo-Environmental Specialists, Inc., Cincinnati, Ohio. Prepared for U.S. Environmental Protection Agency, Division of Stationary Source Enforcement, Under Contract No. 68-02-1321 (Task 3). February 1974.

9. Gerstle, Richard W. Primary Aluminum Industry. PEDCo-Environmental Specialists, Inc. Prepared for: U.S. Environmental Protection Agency, Office of Research and Development. Contract No. 68-02-1321, Task Order No. 26. June 1975.

10. Pewitt, Lawrence. Personal Communication. Texas Air Control Board. October 6, 1976.

REFERENCES FOR SECTION 2.3.1

1. Compilation of Air Pollutant Emission Factors. U.S. Environmental Protection Agency, Office of Air Quality Planning and Standards, Research Triangle Park, N.C. Publication No. AP-42, Second Edition with Supplements 1-6. February 1976.

2. Air Pollution Control in the Primary Aluminum Industry, Volumes I & II. Prepared by Singmaster & Breyer, New York, New York for U.S. Environmental Protection Agency. Publication No. EPA-450/3-73-004A. July 1973.

3. Background Information for Standards of Performance: Primary Aluminum Industry, Volume 1: Proposed Standards. U.S. Environmental Protection Agency, Office of Air Quality Planning and Standards, Research Triangle Park, N.C. Publication No. EPA 450/2-74-020A. October 1974.

4. Air Pollution Control Field Operations Manual, Volume III. Prepared by Pacific Environmental Services, Inc., Los Angeles, California for U.S. Environmental Protection Agency, Office of Air Programs, Raleigh, N.C., Under Control No. CPA 70-122. February 1972.

5. Colpitts, J.W. et al. Particle Sizing on Fugitive Aluminum Potroom Emissions. Presented at the 69th Annual Meeting of the Air Pollution Control Association, Portland, Oregon. June-July 1976.

6. Marshall, Robert C. A Generalized Enforcement Report on Aluminum Reduction Plants. U.S. Environmental Protection Agency, Division of Stationary Source Enforcement.

7. Walker, G. et al. Control of Internal and External Environment in the Primary Aluminum Smelting Industry. Paper No. A72-24. The Metallurgical Society of AIME, New York, New York.

total vent gas flow rate of 12,000 m^3/sec (25,500,000 acfm) and an estimated costs of $20.7 million (1973 basis). This system would reduce particulate emissions vented from the cell rooms by approximately 50 percent.[8,9]

Particulate emissions from refining and casting of aluminum may be reduced through installation and use of a primary control system, and by modifying the refining procedures. When chlorine gas or chloride compounds are used particulate emissions increase. Thus, if other non-chloride containing gases or salts can be used for refining, emissions will be reduced. Increasing the exhaust flow of the primary control system will increase hood capture efficiency and thereby reduce fugitive loses. Scrubbers function adequately to control such emissions.[10]

lytic cells are currently hooded and vented to a primary control system. The vent rate for each cell must be carefully controlled to prevent raw material (alumina) carryover and potential operating problems. Thus the vent rate cannot always be increased without specific study. A good primary hood design with an exhaust rate of 1 to 4 m^3/sec (2000-8000 acfm) per cell should achieve 97 to 99 percent capture efficiency on prebaked and horizontal-stud Soderberg cell emissions.[2,3] Vertical-stud Soderberg cells are more difficult to enclose, and hood capture efficiency is on the order of 70 to 95 percent of the total cell emissions with exhaust flows of 0.2 to 0.3 m^3/sec (400 to 600 acfm) per cell.[2,8]

Careful control of cell temperature through regulation of electrical input will reduce cell upsets and the escape of emissions from around the hood. Improved hood maintenance and rapid replacement of electrodes will also reduce emissions from the primary hood system.

When cell emissions have been reduced as much as possible through good operating techniques and primary hood operation, and a fugitive emission problem is still evident, a building evacuation system may be required. Cell room buildings are always vented through roof monitors, and by ducting the roof monitors to a control device, emissions that are vented through the roof can be reduced. This technique is currently in use (though not typical) on a few vertical-stud Soderberg plants primarily to control fluorides. The control device consists of ducts, fans, and spray chamber to reduce the particulate and fluoride emissions (foam scrubbers have been tried on a pilot scale at one location). A secondary design for one plant with a aluminum production capacity of 163,400 Mg (180,000 tons) per year involved a

Table 2-20. CONTROL TECHNIQUES FOR PRIMARY ALUMINUM PRODUCTION IPFPE SOURCES

Industry: Primary Aluminum Production	Negligible emissions	IPFPE source typically uncontrolled	FUGITIVE EMISSIONS CAPTURE AND CONTROL METHODS														
				Preventative procedures and operating changes							Capture methods				Removal equipment		
			Control technologies identified in Section 2.1	Wet suppression (water and/or chemical)	Confinement by enclosure	Better control of raw material quality	Better control of operating parameters and procedures	Improved maintenance and/or construction program	Increase exhaust rate of primary control system		Fixed hoods, curtains, partitions, covers, etc.	Movable hoods with flexible ducts	Closed buildings with evacuation		Fabric filter	Scrubber	ESP
1. Materials receving and handling (including conveying, grinding, screening, mixing, and paste preparation)			✓												x		
2. Anode baking									x		x					x	x
3. Electrolytic reduction cell							x	x	x		x		o		+	x	x
4. Refining and casting							x		x		x				x	x	

x Typical control technique.

o In use (but not typical) control technique.

+ Technically feasible control technique.

Table 2-19. REPRESENTATIVE PARTICULATE SIZE DISTRIBUTION OF UNCONTROLLED EFFLUENTS FROM PREBAKED AND HORIZONTAL-STUD SODERBERG CELLS[6]

Size range, μm	Particles within size range, wt%	
	Prebaked	Horizontal-stud Soderberg
1	35	44
1 to 5	25	26
5 to 10	4	8
10 to 20	5	6
20 to 44	5	4
44	22	12

Control Technology - Control technology for IPFPE sources in the primary aluminum industry (except for those covered in Section 2.1) are presented in Table 2-20.

Anode baking fugitive emissions occur where no primary control system is utilized on the baking furnace. The most effective method of eliminating these emissions is to install a primary control system on the furnace. Furnace emissions are usually controlled by venting the flue gases through a scrubber or occassionally an electrostatic precipitator. Where such a system does not exist or when it does not provide sufficient draft, fugitive emissions occur. Installation of a new system or upgrading of an existing system is the preferred control technique and should provide greater than 95 percent control.

Electrolytic cell emissions can be reduced by improving the primary hooding and emission collection system, improving cell operation by better control of electrical current, improved hood maintenance, and by venting the cell building through a low pressure drop control system. All electro-

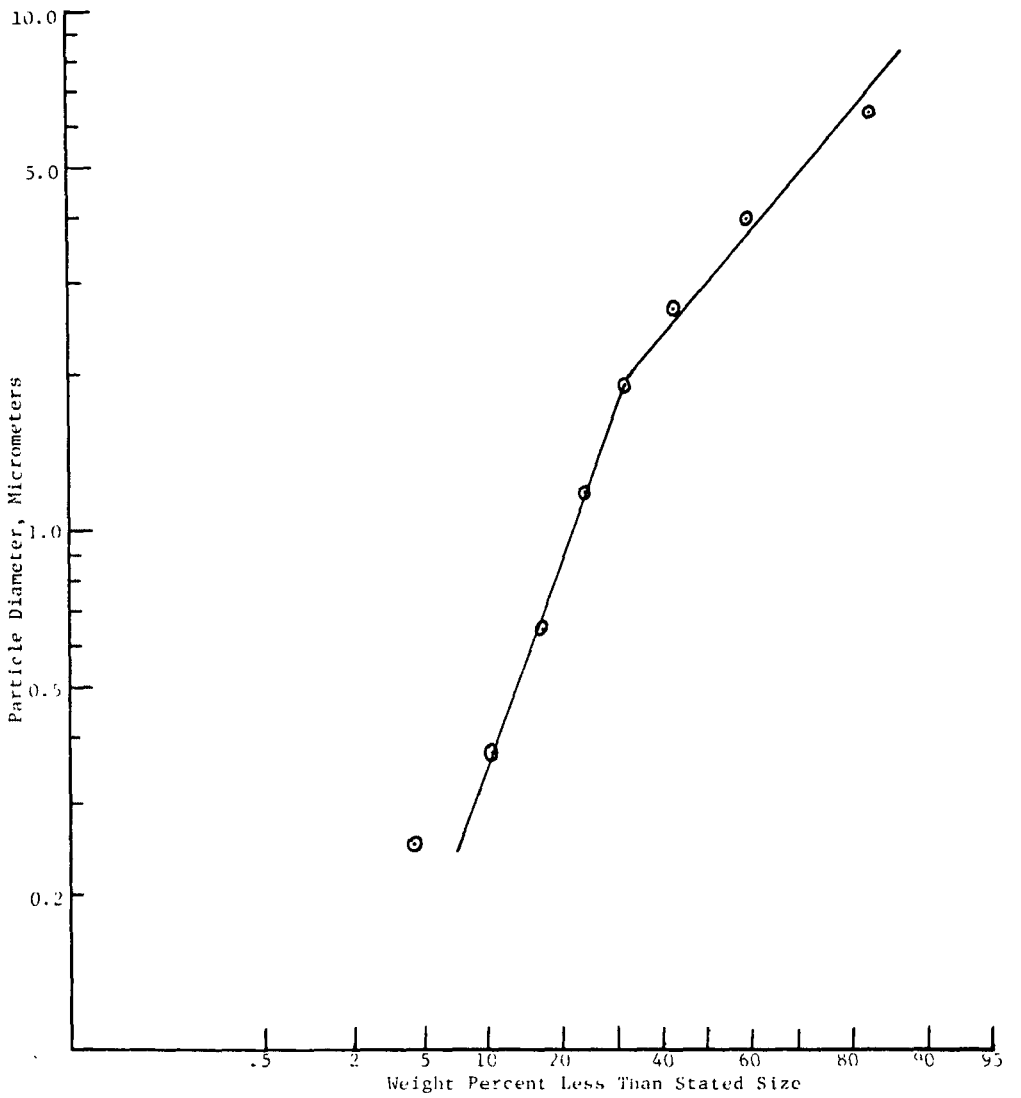

Figure 2-7. Average composite particle size distribution by weight for potroom roof ventilator emissions.[5]

Table 2-18. EMISSION SOURCES AND CONTAMINANTS

No.	Source	Contaminant
1.	Material handling	Al_2O_3, AlF_3
2.	Anode baking	Coke and pitch dust
3. 3a.	Electrolytic reduction cell Soderberg anodes	Al_2O_3, AlF_3, Na_2CO_3, CaF_2, $Na_5Al_3F_{14}$, carbon dust, condensed HC, and tars
4.	Refining	$AlCl_3$, Al_2O_3, Cryolite

Alumina (Al_2O_3), Cryolite (Na_3AlF_6), Aluminum Fluoride (AlF_3), Fluorspar (CaF_2), Sodium Carbonate (Na_2CO_3).

Of the particulates generated approximately 10-25 percent by weight is fluorine content.[2] Particle size distribution data for the material handling operations are not available but most of the emissions are expected to settle within the plant property. One source for size data for fugitive emissions from the reduction cell is shown in Figure 2-7. Size data from another source is presented in Table 2-19. The distribution of emissions is bimodal as a result of different emission processes which may tend to generate particulates either concurrently or in an interrupted pattern. Particulate emissions from the anode baking and metal refining operations are reported to be in the submicron range.[4,7]

Table 2-17. RAW MATERIALS FOR THE PRODUCTION OF ONE Mg OF ALUMINUM[4]

Material	Amount
Alumina (Al_2O_3)	1.9
Cryolite (Na_3AlF_6)	0.03 - 0.05
Aluminum Fluoride (AlF_3)	0.03 - 0.05
Fluorspar (CaF_2)	0.003
Anode	
Petroleum Coke	0.490 Prebake, 0.455 Soderberg
Pitch Binder	0.123 Prebake, 0.167 Soderberg
Cathode (Carbon)	0.02
Total: Approximately	2.6 Mg raw material/Mg Al

Not included in the inventory are fugitive emissions from plant haul roads. These sources may be calculated using procedures outlined in Section 2.1. Total model plant uncontrolled process fugitive particulate emissions are 2,295 Mg (2,528 tons) per year (prebaked plant). Major sources of fugitive emissions are anode baking and reduction cell operations.

Characterization of Fugitive Emissions - Listed in Table 2-18 are constituents of emissions for the four fugitive particulate sources.

included in the Figure or Table, is plant roads. Proper evaluation of this category is explained in Section 2.1.

IPFPE Emission Rates - Table 2-16 presents a summary of uncontrolled emission factors for the aluminum production IPFPE sources. Since these are potential uncontrolled emission rates, the site-specific level of control must be considered for application to a specific plant. Also included are reliability factors for each estimate.

The emission factors for the electrolytic cell and anode baking operation are based on source test data and engineering judgement. Therefore, these values received a reliability rating of "D". The material handling operations include unloading, conveying, grinding, mixing, and making green anode or paste. Since the raw materials are stored in bins, storage is not a fugitive source. The material handling and refining emission factors are based on engineering judgement and, therefore, they received a reliability rating of "E". Consequently, actual emission rates at a given facility could differ significantly from those in Table 2-16.

Example Plant Inventory - The example plant inventory for primary aluminum smelting as shown in Table 2-16 presents potential fugitive particulate emission quantities from the various uncontrolled sources within the process. The inventory represents a plant which produces 200,000 Mg (220,400 tons) of aluminum per year. The plant inventory is not meant to display a typical plant, but merely a potential set of circumstances.

Listed in Table 2-17 are approximate feed rates of raw materials to produce 1 Mg of aluminum.

Table 2-16. IDENTIFICATION AND QUANTIFICATION OF POTENTIAL FUGITIVE PARTICULATE EMISSION POINTS FOR PRIMARY ALUMINUM PRODUCTION

Source of IPFPE	Uncontrolled fugitive emission factor	Emission factor reliability rating	Model plant fugitive emission inventory	
			Operating parameter, Mg/yr (tons/year)	Uncontrolled emissions Mg/yr (tons/yr)
1. Material handling	5.0 kg/Mg of aluminum produced[a,b] (10 lb/ton)	E	Aluminum produced 200,000 (220,400)	1,000 (1,102)
2. Anode baking	1.0-5.0 (1.5) kg/Mg of aluminum[b] produced[c] (3.0 lb/ton)	D	Aluminum produced 200,000 (220,400)	300 (330)
3. Electrolytic reduction cell				
3a. Prebaked	0.75-6.7 kg/Mg of aluminum produced[c] (1.5-13.4 lb/ton)	D	Aluminum produced 200,000 (220,400)	745 (821)
3b. VSS Soderberg	13.1 kg/Mg of aluminum produced[c] (26.2 lb/ton)	D		
3c. HSS Soderberg	0.75-10.8 kg/Mg of aluminum produced[c] (1.5-21.6 lb/ton)	D		
4. Refining	1.25 kg/Mg of aluminum produced[d] (2.5 lb/ton)	E	Aluminum produced 200,000 (220,000)	250 (275)

[a] Includes unloading conveying, crushing, screening, mixing, and green anode or paste preparation. Individual emission rates are not available. Most of these sources are enclosed/vented through a particulate control device.

[b] Reference 1 and 2.

[c] Reference 2 and 3. Includes charging, tapping, and anode replacement.

[d] No data available. Estimate based on the emission factor in Reference 1, assuming 95 percent hood capture efficiency.

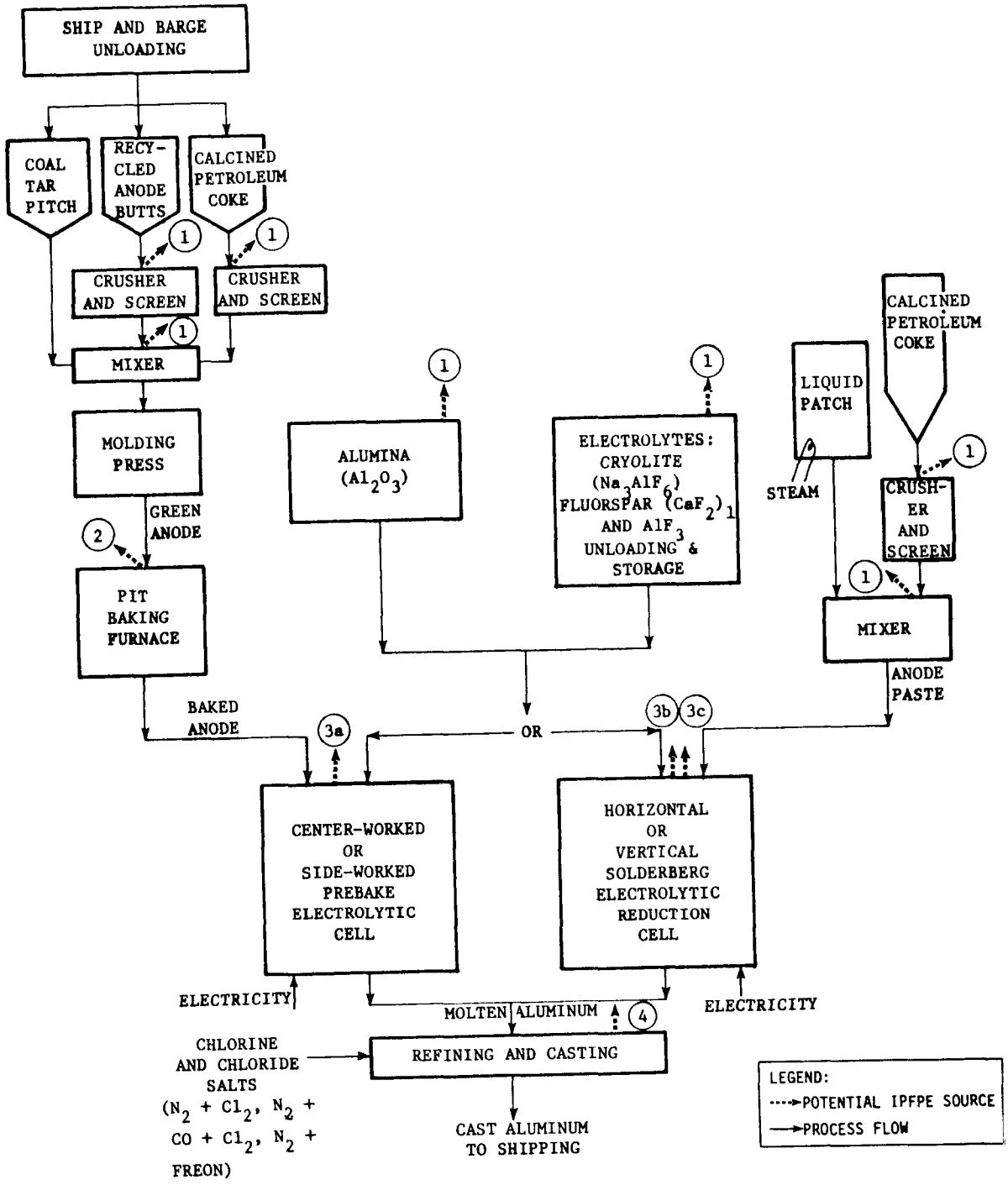

Figure 2-6. Process flow diagram for primary aluminum production showing potential industrial process fugitive particulate emission points.

The second most commonly used pot is the horizontal-stud Soderberg. This type of cell uses a continuous carbon anode in which a mixture of pitch and carbon aggregate is periodically added at the top of the cell, and the entire assembly is moved downward as the carbon burns away. The cell anode is contained by aluminum and steel channels, through which electrode connections, called studs, are inserted in the anode paste (the pitch and carbon aggregate mixture). As the baking anode is lowered, the lower row of studs and the bottom channel are removed and the flexible electrical connectors are moved to a higher row.

The vertical-stud Soderberg is similar to the horizontal-stud pot except that the studs are mounted vertically in the cell.

When current is applied, over a period of time, the alumina breaks down and the molten aluminum goes to the bottom of the pot. Additional alumina is added to the batch to replace that consumed in the reduction process. Heat is generated by the resistance to the flow of electrical current in passage through the cell. The cell is designed to be operated within a narrow temperature range. The heat generated is sufficient to maintain the electrolyte in a molten state as well as to dissolve added alumina. Periodically, molten aluminum (99.5 percent pure) is siphoned from the reduction cells into crucibles and transferred to gas-fired holding furnaces, or cast in large sows for later remelt. Refining is accomplished by fluxing with gas or various salts to removed oxides and gas inclusions.

A process flow diagram for primary aluminum smelting is shown in Figure 2-6. Each potential process fugitive emission is identified and explained in Table 2-16. A dust source common to all aluminum smelters, but not specifically

2.3 PRIMARY NON-FERROUS SMELTING INDUSTRY

2.3.1 Primary Aluminum Production

Process Description - Smelting is the process that breaks alumina down into its two components, aluminum and oxygen. The basic smelting process is the Hall-Heroult Process. In this process, alumina is dissolved in a bath of molten cryolite (sodium aluminum fluoride) in large electric furnaces. These pots, as the furnaces are called, are deep rectangular steel shells lined with carbon and connected in series to form a "potline."

Although cryolite is the primary ingredient, the electrolyte in industrial use has four constituents. These four constituents and their range of composition are: cryolite, 80 to 85 percent; calcium fluoride, 5 to 7 percent; aluminum fluoride, 5 to 7 percent; alumina, 2 to 8 percent. The melting point of the cryolite is 958°C (1760°F). Alumina is added regularly to replenish the quantities converted to aluminum, and other constituents are added as needed to maintain a predetermined bath composition.

High-amperage, low-voltage direct current is passed through the cryolite bath, by means of carbon anodes suspended in each pot, to the bottom of the pot which serves as the cathode.

There are three types of pots currently in use: prebaked, horizontal-stud Soderberg (HSS), and vertical-stud Soderberg (VSS). The major portion of aluminum produced in the United States is processed in prebaked cells. In this type of pot, the anode consists of blocks that are formed from a carbon paste and baked in an oven prior to use in the cell. These blocks are attached to metal rods and serve as replaceable anodes. As the reduction proceeds, the carbon is gradually consumed.

18. Brough, J.R. and W.A. Carter. Air Pollution Control of an Electric Furnace Steelmaking Shop. Journal of the Air Pollution Control Association. 22:167-171. 1972.

19. Hardison, L.C. and Carroll Greathouse. Air Pollution Technology and Costs in Nine Selected Areas. Industrial Gas Cleaning Institute, Inc. Prepared for U.S. Environmental Protection Agency. Contract No. 68-02-0301. Durham, North Carolina. September 30, 1972.

20. Flux, J.H. The Control of Fume from Electric Arc Steelmaking. Iron and Steel International. June 1974.

21. McMullen, R.M. The Steel Industry Viewpoint on Air Pollution Control Regulations and Standards. Air Pollution Control Association Specialty Conference on, Air Quality Standards and Measurement. October 13-15, 1974.

22. Kaercher, V.T. and V.D. Sensenbaugh. Air Pollution Control for an Electric Furnace Melt Shop. Iron and Steel Engineer. May 1974.

23. Brough, J.R. and W.A. Carter. Air Pollution Control of an Electric Furnace Steelmaking Shop. Journal of the Air Pollution Control Association. Vol. 22, No. 3. March 1972.

24. Background Information for Standards of Performance: Electric Arc Furnaces in the Steel Industry, Vol. 1. Proposed Standards, EPA-450/2-74-017a. Office of Air Quality Planning and Standards, U.S. Environmental Protection Agency, October 1974. p. 144.

9. Goodwin, D. Your Request for Information Concerning Electric Arc Steel Furnaces, dated November 11, 1974, Memorandum to G.T. Helms. Emission Standards and Engineering Division, U.S. Environmental Protection Agency, Research Triangle Park, North Carolina. November 25, 1974.

10. Iversen, Reid. Personal Communication. U.S. Environmental Protection Agency, Office of Air Program. Research Triangle Park, North Carolina. To PEDCo Environmental, Inc., Cincinnati, Ohio.

11. Gutow, B.S. An Inventory of Iron Foundry Emission. Modern Castings. January 1972.

12. Midwest Research Institute. A study of Fugitive Emissions from Metallurgical Processes. U.S. Environmental Protection Agency, Industrial Environmental Research Laboratory. Contract No. 68-02-2120. Monthly Progress Report No. 9. Research Triangle Park, North Carolina. July 15, 1976.

13. Vandegrift, A.E. and L.J. Shannon. Handbook of Emissions, Effluents, and Control Practices for Stationary Particulate Pollution Sources. Midwest Research Institute. Prepared for U.S. Environmental Protection Agency. Contract No. CPA 22-69-104. November 1, 1970.

14. Fugitive Emissions Control Technology for Integrated Iron and Steel Plants, Draft. Midwest Research Institute. Prepared for U.S. Environmental Protection Agency, Industrial Environmental Research Laboratory. Contract No. 68-02-2120. Research Triangle Park, North Carolina. January 17, 1977.

15. Mattis, Robert P. An Evaluation of Charging and Tapping Emissions for the Basic Oxygen Process. Presented at the 68th Annual Meeting of the Air Pollution Control Association. Boston, Massachusetts. June 15-20, 1975.

16. Allen, Roger. Iron and Steel Plants Basic Oxygen Furnaces. U.S. Environmental Protection Agency, Division of Stationary Source Enforcement.

17. Simpson, Wayne and David H. Wheeler. Occupational Health in Safety Aspects of Air Pollution Control in Steelmaking. Paper No. 76-40.3. 69th Annual Meeting, Air Pollution Control Association. Portland, Oregon. June 26 - July 1, 1976.

REFERENCES FOR SECTION 2.2.3

1. Trenholm, Andrew. Personal Communication. U.S. Environmental Protection Agency, Durham, North Carolina. To Thomas Janszen, PEDCo Environmental, Inc., Cincinnati, Ohio. September 23, 1976.

2. Notes prepared by G. McCutchen. U.S. Environmental Protection Agency, Office of Air Quality Planning Standards. Research Triangle Park, North Carolina. February 1976.

3. Nicola, G. Fugitive Emissions Control in the Steel Industry. Iron and Steel Engineer. July 1976.

4. Transmittal from American Iron and Steel Institute to Mr. Don Goodwin, U.S. Environmental Protection Agency, Office of Air Quality Planning and Standards, Research Triangle Park, North Carolina. Data contained in Table entitled Source Data for Steel Facility Factors. July 13, 1976.

5. Iversen, Reid. Personal Communication. U.S. Environmental Protection Agency, Office of Air Program. Research Triangle Park, North Carolina. December 3, 1976.

6. Neulicht, Roy. Trip Report - Interlake Inc., Chicago, Illinois. January 26, 1976. Letter to Mr. John E. Baker, Armco Steel, Middletown, Ohio (PF 60).

7. Mattis, R.P. An Evaluation of Charging and Tapping Emission for the Basic Oxygen Process. U.S. Environmental Protection Agency. (Presented at 68th Annual Meeting of the Air Pollution Control Association. Boston, Massachusetts. June 15-20, 1975. Publication No. 75-15.1).

8. Iversen, R.E. Meeting with U.S. Environmental Protection Agency and AISI on Steel Facility Emission Factors. April 14 and 15, 1976. U.S. Environmental Protection Agency Memorandum. June 7, 1976.

emissions as with building evacuation, but requires less exhaust volume because of the smaller area.

Building evacuation systems are estimated to achieve nearly 100 percent capture of the emissions from electric arc furnaces. A baghouse will collect 95 percent of the emissions. Canopy hoods have been estimated to capture 50 to 90 percent of the fugitive emissions, those from changing and tapping.[24] This estimate is based on judgment from visual observations and consequently the range is wide. The efficiency will also vary between specific installations and from day to day for a given installation due to factors such as the volume of the emission plume and cross drafts in the building.

Scarfing emissions can be captured by a hood and ducted to either a scrubber or ESP.

Ingot casting can be controlled by fixed or movable hoods depending on space limitation and operating procedures. Building evacuation is an alternative but requires large volumes of air. It is estimated that a flow rate of 236 m^3/sec (500,000 acfm) is required for each pouring aisle. The purchase and installation cost for a two aisle evacuation system using medium temperature baghouses is estimated at $1,500,000 and $70,000 annual maintenance cost.[13] In addition, careful control of pouring temperature can help alleviate the generation of fugitive emissions. However, pouring temperature is an important metallurgical parameter and can not always be controlled to reduce emissions. The choice of mold release materials not containing oils and other volatiles will also help prevent the generation of fugitive emissions.

Each of these systems has advantages and disadvantages. Direct evacuation of the furnace is effective but will not control all operations (e.g. charging). Local and roof or canopy hoods must be located so as to not interfere with normal operations, but can control charging and tapping emissions.[18,19,20] Building evacuation can capture all fugitive emissions, but requires large volumes of air. Several electric furnace shops are exhausting over 472 m^3/sec (1 million ft^3/min). One installation handles 755 m^3/sec (1.6 million ft^3/min) at a capital cost of over $10 million.[20,21] Generally flow rates for building evacuation range from about 1.4 to 1.9 Nm^3/sec (3000 to 4000 scfm) per Mg (ton) capacity.[13]

A common control system is the use of both direct furnace evacuation and canopy hoods.[20,22,23] In designing the system, the canopy hood should be positioned as close above the source as possible without interferring with crane operations. Nine to twelve meters (30 to 40 ft) between the furnace and the canopy is often necessary. Sheet metal partitions can be installed on three sides of the furnace to create a chimney effect. Flow rates are approximately 1 to 2 Nm^3/sec per Mg (1,500 to 4,000 scfm per ton) capacity. In one plant the installed cost for the baghouse, ducting, hoods, and monitor closing for a 210 m^3/sec (440,000 acfm) system is estimated to be $2.38 million including building modification.[14]

When a system such as direct shell evacuation is not used to capture emissions during melting and refining, canopy hoods may not be adequate. In these cases, building evacuation may be necessary.

Another promising capture technique is to enclose the furnace and evacuate the enclosure. This contains all

evacuation is complete enclosure of the furnace and tapping areas to control charging, tapping, ladle alloy additions, and slagging. Furnace enclosures with a draft of approximately 165 m^3/sec (350,000 acfm) are currently operating effectively.[3]

Other control techniques for BOF shops include local or canopy hooding of the individual emission points. Secondary hoods can be used to control charging and tapping emissions. The collected emissions can be ducted to the existing or a new collecting device. Many steel mills are redesigning their hood and ducting systems instead of purchasing from a vendor. Extra capacity ductwork, and hooding are the main alterations. Puffing, emissions from the BOF during oxygen lancing, will not occur if adequate draft is maintained by the primary collector. As well, charging can be controlled by the "jaw" damper, a device which increases draft at the charging aisle side of the main exhaust hood and thus promotes better capture.

To control open hearth furnaces, complete or partial, building evacuation is possible, but like the BOF shop, would require very large flow rate. Such a system if installed, however, would control all emission points to some degree. An alternative would be canopy or local hooding of the charging doors and tapping area. This would also control furnace leaks. These hoods could be ducted to the existing control device or to separate systems.

There are many effective control options for electric furnace melt shops. These include:

- Direct evacuation of the furnace,
- Local hoods above the furnace,
- Roof or canopy hoods,
- Building evacuation.

Table 2-15. CONTROL TECHNIQUES FOR STEEL MANUFACTURING IPFPE SOURCES

Industry: Steel Manufacturing	Negligible emissions	IPFPE source typically uncontrolled	Control technologies identified in Section 2.1	FUGITIVE EMISSIONS CAPTURE AND CONTROL METHODS													
				Preventative procedures and operating changes							Capture methods				Removal equipment		
				Wet suppression (water and/or chemical)	Confinement by enclosure	Better control of raw material quality	Better control of operating parameters and procedures	Improved maintenance and/or construction program	Increase exhaust rate of primary control system		Fixed hoods, curtains, partitions, covers, etc.	Movable hoods with flexible ducts	Closed buildings with evacuation	Enclosure of furnace area with evacuation	Fabric filter	Scrubber	ESP
1. Scrap steel unloading, transfer and storage	✓																
2. Flux material unloading, transfer, and storage	✓																
3. Molten pig iron transfer from torpedos to charge ladles (hot metal reladling)											o	o			o		
4. Basic oxygen furnace - roof monitor (total)													+	o	o		
4a. Charging											o	o	+		o		
4b. Leakage	✓																
4c. Tapping-steel											o	o	+	o	o		
4d. Tapping-slag											o	o	+	o	o		
5. Open hearth furnace - roof monitor (total)													+		o		
5a. Charging											o	o			o		
5b. Leakage								o					o		o		
5c. Tapping-steel											o	o			o		
5d. Tapping-slag											o	o			o		
6. Electric arc furnace - roof monitor (total)													o	o	o		
6a. Charging											o	o	o	o	o		
6b. Leakage								o					o	o	o		
6c. Tapping-steel											o	o	o	o	o		
6d. Tapping-slag											o	o	o	o	o		
7. Ingot casting							o				o	o	+		o		
8. Molten steel reladling												o				o	
9. Scarfing											o		o		o		o

x Typical control technique.

o In use (but not typical) control technique.

+ Technically feasible control technique.

have a vertical velocity of 1.0 to 2.8 meter/second (200 to 500 fpm) at a temperature of ambient to 27°C (80°F) above ambient. The fugitive particulate emissions have a mean diameter of 0.3-5 μm (1.3 μm average) of which 59-99 percent are less than 5 μm.[10,13]

Fugitive emissions from scarfing are usually less than 2 μm and have an exit temperature of 23°C (42°F) above ambient.[2,12]

Control Technology - Control technology options for the steel production IPFPE sources (except those covered in Section 2.1) are presented in Table 2-15 and are explained in more detail below.

Hot metal or molten steel reladling can be effectively controlled by a close fitting movable ladle hood. For example, reladling for a 350 Mg (320 ton) capacity furnace is controlled by a 59 m^3/sec (125,000 acfm) ladle hood and high energy scrubber. Also, canopy or local hoods to control the same reladling station would require a 140 m^3/sec (300,000 acfm) flow.[3] An installed cost for a 70 m^3/sec (150,000 acfm) system including baghouse erection, insulation material, transportation of equipment, site preparation, and auxiliary equipment such as fans, ductwork, monitors, and control instrumentation has been estimated at $525,000.[14]

For the BOF shop, once the emissions escape into the building they are difficult to capture. This would require complete or partial building evacuation to control. While this may be a preferred alternative from an operational viewpoint, and because of the relatively complete capture of emissions, disadvantages are the high flow rate requirements and cost. Flow rates for such a system would be in excess of 470 m^3/sec (995,000 acfm).[2] An alternative to building

emissions from steel production are charging and tapping emissions and related operations.

Characterization of Fugitive Emissions - Fugitive particulate emissions from steel production consist basically of iron oxide. Fugitive particulate emissions from a Basic Oxygen Furnace (BOF) may have exit temperatures of 290-1650°C (560-3000°F) but this temperature quickly decreases before any major dispersion of the particulates. Fugitive emissions from a 40 meter (130 ft) BOF building monitor may have a vertical velocity of 10 meter/second (2000 fpm) with an exit temperature of 150°C (300°F). These fugitive emissions have a mean diameter of 0.5 μm of which 85-99 percent are less than 5 μm. Fugitive hot metal charging fumes from the BOF process are 35 percent iron oxide and 30 percent kish (graphite). Fugitive tapping fumes are 75 percent iron oxide and are less than 10 μm. Fugitive hot metal reladling fumes are 55 percent iron oxides less than 3 μm and 42 percent graphite greater than 75 μm. Fugitive emissions from a slagging are usually less than 100 μm.[10,11,12]

Fugitive particulate emission from the Open Hearth Furnace process may have exit temperatures of 240-980°C (460-1800°F) which also quickly cool before dispersing. Fugitive emissions from a 24 meter (80 ft) height will have a vertical velocity of 0.89 meters/second (175 fpm) and a temperature of 11°C (52°F) above ambient. The fugitive particulate emissions have a mean diameter of 0.3-5.0 μm of which 50-99 percent are less than 5 μm.[10,12]

Fugitive particulate emissions from an Electric Arc Furnace process may have exit temperatures of 540-1650°C (1000-3000°F) but quickly cool before dispersing. Fugitive emission from a 27 to 42 meter (90 to 137 ft) height will

Proper evaluation of this emission category is explained in Section 2.1.

IPFPE Emission Rates - Table 2-14 presents a summary of uncontrolled emission factors for the steel production IPFPE sources. Since these are potential uncontrolled emission rates, the site-specific level of control must be considered for application to a specific plant. Also included are reliability factors for each estimate.

Since emission estimates are available for the BOF shop roof monitor (all fugitive emissions) and some individual processes within the building, both were included in Table 2-14. However, where only building monitor estimates are available, attempts were not made to estimate emissions from the individual emission point within the building.

Example Plant Inventory - The example plant inventory for steel production as shown in Table 2-14 presents potential fugitive emission quantities from an integrated facility having Basic Oxygen, Open Hearth, and Electric Arc processes. The plant inventory is not meant to display a typical plant situation, but merely a potential set of circumstances. The assumed annual rate of steel production from the integrated facility was as follows:

- Basic Oxygen Furnaces - 1,816,000 Mg (2,000,000 tons)
- Open Hearth Furnaces - 635,600 Mg (700,000 tons)
- Electric Arc Furnaces - 454,000 Mg (500,000 tons)

Total production - 2,905,600 Mg (3,200,000 tons)

Not included in the inventory are fugitive particulate emissions from plant haul roads. These sources may be calculated using procedures outlined in Section 2.1. Total model plant uncontrolled process fugitive particulate emissions are 1605 Mg (1771 tons) per year. Major sources of

Table 2-14 (continued). IDENTIFICATION AND QUANTIFICATION OF POTENTIAL FUGITIVE PARTICULATE EMISSION POINTS FOR STEEL PRODUCTION

Source of IPFPE	Uncontrolled fugitive emission factor	Emission factor reliability rating	Model plant fugitive emission inventory	
			Operating parameter, Mg/yr (tons/year)	Uncontrolled emissions Mg/yr (tons/yr)
6. Electric arc furnace - roof monitor (total)	0.09-1.5 kg/Mg steel[c,e,h,l] (0.18-3.0 lb/ton steel) Carbon steel: 1.5 kg/Mg steel (3.0 lb/ton) Alloy steel: 0.75 kg/Mg steel (1.5 lb/ton)	C	Steel produced (≈50% carbon steel) 454,000 (500,000)	511 (563)
6a. Charging	j			
6b. Leakage	j			
6c. Tapping-steel	j			
6d. Tapping-slag	j			
7. Ingot casting	0.014-0.06 kg/Mg steel[k] (0.028-0.12 lb/ton)	E	Steel produced 2,905,600 (3,200,000)	108 (118)
8. Molten steel reladling	0.014-0.06 kg/Mg steel[k] (0.028-0.12 lb/ton steel)	E	Steel produced 1,360,000 (1,500,000)	50 (56)
9. Scarfing	0.0055 kg/Mg steel[l] (0.011 lb/ton steel)	C	Steel produced 907,000 (1,000,000)	5 (5)

[a] Reference 2.
[b] Reference 3.
[c] Reference 4.
[d] Reference 5.
[e] Reference 6.
[f] Reference 7.
[g] Emissions included with steel tapping emission factor.
[h] Reference 8.
[i] Emissions included with total open hearth building emission factor.
[j] Emissions included with total electric furnace emission factor.
[k] Engineering judgment, assumed to be 50 percent of the hot metal reladling emission factor because of the lower carbon content of steel.
[l] Reference 24.

Table 2-14. IDENTIFICATION AND QUANTIFICATION OF POTENTIAL FUGITIVE PARTICULATE EMISSION POINTS FOR STEEL PRODUCTION

Source of IPFPE	Uncontrolled fugitive emission factor	Emission factor reliability rating	Model plant fugitive emission inventory	
			Operating parameter, Mg/yr (tons/year)	Uncontrolled emissions Mg/yr (tons/yr)
1. Scrap steel unloading, transfer and storage	Negligible	E		
2. Flux material unloading, transfer, and storage	Negligible	E		
3. Molten pig iron transfer from torpedos to charge ladles (hot metal reladling)	0.028-0.12 kg/Mg hot metal[a,b,c] (0.056-0.25 lb/ton hot metal)	D	Hot pig iron 3,178,000 (3,500,000)	235 (268)
4. Basic oxygen furnace - roof monitor (total)	0.08-0.6 kg/Mg steel[b,c,d,e] (0.15-1.2 lb/ton steel) also: E (lb/ton) = $1.09e^{0.0083P}$ where P = BOF capacity tons[f]	D	Steel produced 1,816,000 (2,000,000)	617 (675)
4a. Charging	0.15-0.20 kg/Mg hot metal poured[b] (0.3-0.4 lb/ton hot metal)	D		
4b. Leakage	Negligible[b]	E		
4c. Tapping-steel	0.07-0.15 kg/Mg steel tapped[b] (0.15-0.3 lb/ton steel tapped)	D		
4d. Tapping-slag	g			
5. Open hearth furnace - roof monitor (total)	0.05-0.20 kg/Mg steel[c,d,e,h] (0.1-0.39 lb/ton steel)	D	Steel produced 635,600 (700,000)	79 (86)
5a. Charging	i			
5b. Leakage	i			
5c. Tapping-steel	i			
5d. Tapping-slag	i			

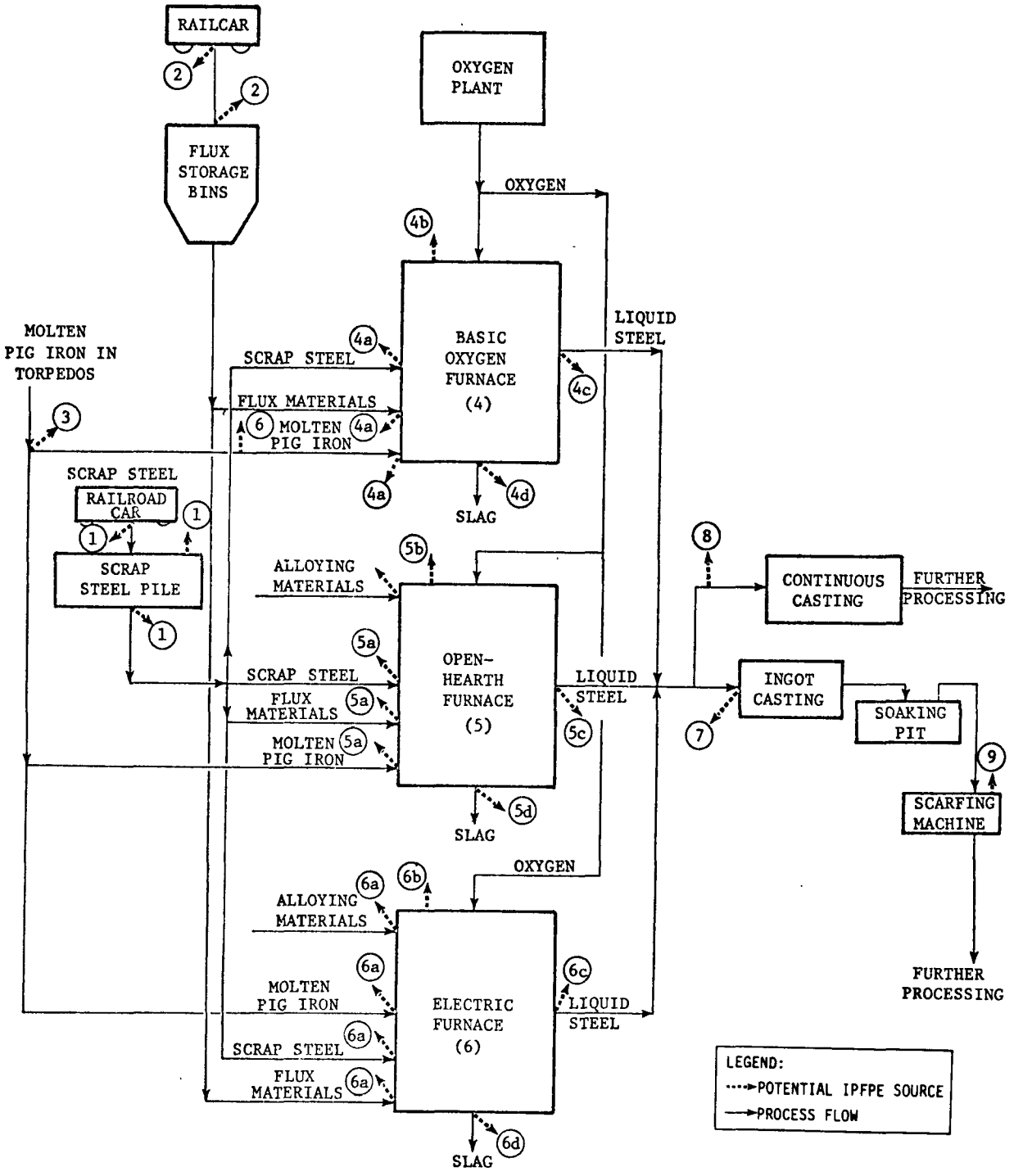

Figure 2-5. Process flow diagram for steel production showing potential industrial process fugitive particulate emission points.

Surface defects are removed in a process called scarfing and may be done either by hand or mechanically. The mechanical hot scarfer is installed directly in the mill line and is composed of a number of scarfing torches (oxyacetylene). The machine is designed to remove a thin layer (one-eighth inch or less) of metal from all four sides of red-hot steel billets, blooms, or slabs as they travel through the machine. Scarfing is also done manually in some mills and usually the material to be scarfed is cold. Prior to rolling, the material must be reheated in a horizontal furnace.

Slabs may be further processed to plates or coils. The coils are usually processed in the sheet and tin mills. Oxides and scale are chemically removed from the surface of the metal by pickling. The conventional facility for pickling strip is a horizontal continuous line of equipment consisting of a tank or tanks divided into separate sections for pickling, washing, etc. with uncoiling and welding equipment on the entry end and rewind and shearing equipment on the exit end.

After pickling, the coils in the sheet and tin mills may receive one of many treatments. These include cold reduction, batch or continuous annealing, tempering, tin plating, galvanizing, tin-free coating, chroming, slitting, leveling, shearing, etc. Blooms and billets are processed into shapes, structural, tubular, bars, rebars, and wire.

A process flow diagram for steel production is shown in Figure 2-5. Each potential process fugitive emission point is identified and explained in Table 2-14. A dust source common to all steel producing facilities, but not specifically included in the Figure or Table is plant roads.

hearth. From the time the pool forms, the charge is heated from the bottom up by radiation from the pool, by heat from the arcs and by the resistance offered to the current by the scrap. Often second and third charges may be added to the melt. During these charges considerable fugitive emissions are evolved.[1] Melting continues until the charge is completely melted. Composition of the steel is then adjusted by adding alloys, blowing oxygen into the bath and by use of fluxes to remove impurities. The molten steel is then tapped into a ladle by tilting the furnace. Cycles or "heats" vary considerably depending on the type of steel produced. They range from 1 1/2 to 5 hours to make carbon steel to 5 to 10 hours to make alloy steels.

The finished steel from whatever type of furnace, is tapped into ladles and carried by an overhead crane to a pouring platform where the steel is either teemed (poured) into a series of molds or carried directly to a continuous casting unit. Before teeming or casting, the steel may be vacuum degassed to lower the free gas content of the steel. When teemed into molds, the molten steel solidifies to form an ingot. Continuous casting is a process whereby the molten steel is teemed into a tundish and the flow from the tundish is controlled as the molten steel discharges into one or more molds of the continuous caster or strands. The solidified steel is withdrawn from the bottom of the molds as a continuous strand and subsequently cut to desired lengths as the casting continues.

After the ingots are cool, they are stripped from the mold and transferred to a heating furnace (called a soaking pit) where the temperature of the ingot is raised and equalized to soften the steel for rolling on the primary rolling mills. The products of the primary mills, known as the semifinished products, are called blooms, slabs and billets.

iron to the furnace and an oxygen lance is lowered into the furnace and the flow of oxygen is started. Striking the surface of the liquid bath, the oxygen immediately starts exothermic reactions by oxidation of carbon, silicon, manganese, and some of the iron. Fluxes and other additives can be added to the furnace during the operation through an opening in the hood.

At the completion of the blow (30-45 minutes), the lance is withdrawn and a temperature reading is taken and a sample of steel withdrawn for chemical analysis. When the temperature and composition are satisfactory, the furnace is tilted and the molten steel is transferred into the ladle positioned on a transfer car where alloying additions may be made.

Hot metal is delivered to the basic oxygen shop in submarine or torpedo cars from the blast furnace. The metal is transferred to a charging ladle at the reladling station where the car and metal are weighed in order to charge the proper amount of hot metal. A crane transports the molten iron to the steel making vessel.

Electric - In an electric arc furnace, the heat is supplied by electrical energy. With the power turned off, the electrodes and roof are swung out of the way. Solid scrap and other components of the charge (sometimes including hot metal) are placed in the furnace by means of the overhead crane. Alloying materials are added as and when required.

After charging is complete, the roof is returned and the electrodes are lowered. The power is turned on and the current passes from the electrodes, through the charge. Since the arcs melt the portion of the charge directly beneath each electrode, the electrodes "bore" through the solid charge with the melted metal forming a pool on the

2.2.3 Steel Manufacture

Process Description - Steel is usually made from scrap steel and/or molten iron (hot metal). Impurities present in the scrap and pig iron (such as sulfur and phosphorus) are reduced with fluxes. The content of carbon alloys such as manganese or silicon are adjusted as necessary. The three main types of steel producing furnaces are electric arc, open-hearth and basic oxygen.

Open hearth - In the open hearth process for making steel, a mixture of scrap steel, fluxes, and hot metal is melted in a shallow rectangular basin or hearth. The charging machine places the scrap materials and fluxes in the furnace. The molten metal is conveyed by means of a refractory-lined trough from a ladle into the furnace. Burners are located at the end walls of the furnace and are alternately used. Heat for the furance is supplied by burning fuel oil, tar-pitch mixtures, coke-oven gas, or natural gas. Impurities are removed in a slag which forms a layer on top of the molten metal. If oxygen is used, it is injected into the furnace through the roof of the furnace to speed the refining process, save fuel, decrease tap to tap time and increase steel production rates. A complete cycle (one heat) usually takes about ten hours for conventional furnaces but with the use of oxygen lancing or an oxygen enriched fuel, the heat time may be reduced to six hours, depending on the amount of oxygen introduced. The steel is then tapped into a ladle through a port at the rear of the furnace.

Basic oxygen - The basic oxygen process requires no external source of heat. A cylindrical-base, lined furnace with a dished bottom and truncated - cone shaped top is charged with scrap steel. A transfer ladle adds molten pig

9. Caraway, James C. Personal Communication. Texas Air Control Board, To Robert Amick, PEDCo Environmental, Inc., Cincinnati, Ohio. October 6, 1976.

10. Standards Support and Environmental Impact Statement - An Investigation of Best Systems of Emission Reduction for Sinter Plants in the Iron and Steel Industry. U.S. Environmental Protection Agency, Research Triangle Park, North Carolina. April 1976.

REFERENCES FOR SECTION 2.2.2

1. Open Dust Sources Around Iron and Steel Plants, Draft. Midwest Research Institute. Prepared for U.S. Environmental Protection Agency, Industrial Environmental Research Laboratory. Contract No. 68-02-2120. Research Triangle Park, North Carolina. November 2, 1976.

2. Gutow, B.S. An Inventory of Iron Foundry Emissions. Modern Casting. January 1972.

3. Compilation of Air Pollution Emission Factors. Second Edition. U.S. Environmental Protection Agency, Office of Air and Water Management, Office of Air Quality Planning and Standards. Publication No. AP-42. Research Triangle Park, North Carolina. February 1976.

4. Iversen, R.E. Meeting with U.S. Environmental Protection Agency and AISI on Steel Facility Emission Factors. April 14 and 15, 1976. U.S. Environmental Protection Agency Memorandum. June 7, 1976.

5. Speight, G.E. Best Practicable Means in the Iron and Steel Industry. The Chemical Engineer. March 1973.

6. Iversen, Reid. Personal Communication. U.S. Environmental Protection Agency, Research Triangle Park, North Carolina, To PEDCo Environmental, Inc., Cincinnati, Ohio. December 13, 1976.

7. McCrillis, Robert C. Personal Communication. U.S. Environmental Protection Agency, Industrial Environmental Research Laboratory. Research Triangle Park, North Carolina, To PEDCo Environmental, Inc., Cincinnati, Ohio. January 12, 1977.

8. Vandegrift, A.E. and L.J. Shannon. Handbook of Emissions, Effluents, and Control Practices for Stationary Particulate Pollution Sources. Midwest Research Institute. Prepared for U.S. Environmental Protection Agency. Contract No. CPA 22-69-104. November 1, 1970.

(1180 m^3/sec or 2.5 million cfm system) to control its blast furnace tapping operations.[9]

Wet suppression by means of a water spray is a potential means of controlling fugitive emissions during handling and dumping of slag. However, if the slag is relatively hot during this period, wet suppression will not be desirable since it may result in the generation of larger volumes of fugitive emissions. When dumping the slag, if the free-fall distance is kept to a minimum the generation of fugitive emissions can be somewhat alleviated. Confinement of the slag dumping area or installation of wind break walls will help in preventing the generation of windblown fugitive emissions. If the dumping area is a relatively small designated area, it may be possible to construct a fixed hood which can vent fugitive emissions to a baghouse.

Wet suppression during slag crushing will normally be effective in controlling fugitive emissions. Alternative controls include use of a fixed hood over the crusher or use of a closed building with evacuation to a fabric filter.

Operating practices in conjunction with control of raw material quality can be methods used to prevent slips in blast furnaces and thus the generation of fugitive emissions. Operators of blast furnaces will often vary the sequence of skip car loads (coke, ore, stone, etc.) in order to minimize slips. However, since no two blast furnaces are alike, the sequence must be specific to each furnace. In the event that slips do occur, there are two technically feasible control techniques for fugitive emissions. The bleeder valve can be vented down to ground level with exhaust into a water hot well where particulates will settle out in the well and the gases bubble out. A second method would be to construct a box over the bleeder valve. Contained in the box structure would be baffles which would induce the settling of particles. A disadvantage to this system, however, would be that during periods of high moisture content caking could occur, resulting in decreased efficiency of the system. It should be noted that these two methods are considered feasible but are not known to be used.

Tapping of iron and slag can both be controlled by the use of fixed or movable hoods. The choice of a fixed or movable hood will depend on space limitations as well as related operations which may make one type more desirable. At times because of furnace design, a hood must be placed some distance above a tapping area. Under such conditions movable curtains will aid in directing fugitive emissions into the hood. Close covers over iron and slag runners are another way of effecting fume capture, especially in well operated shops. Venting to a baghouse will effectively remove the emissions. A major steel manufacturer recently spent $6.5 million for hooding, ducting, and fabric filter

prevent the generation of fugitive emissions. Also if the free-fall distance from the discharge to the receiving system is minimized, the amount of fugitive emissions generated can be greatly reduced. Confining the windbox discharge and receiving systems will keep fugitive emissions from dispersing. The use of a fixed hood constructed around the discharge or over the receiving system will effectively capture fugitive emissions which can then be vented to a baghouse. Normally these fugitive emissions are negligible.

Sinter machine discharge and screening fugitive emissions may be controlled through confinement by enclosure. If the system has primary controls, increasing the exhaust rate may increase collection efficiency. However, this may require changes such as a new fan and motor. Redesign of the existing control system or repair and/or replacement of faulty parts may also help alleviate fugitive emission problems. A fixed hood constructed over screening operations will effectively control fugitive emissions, particularly if screening is of the agitation type. Venting to a baghouse will effectively remove the emission. Fugitive emissions from the sinter cooler can be controlled by confining the cooler and venting to an air/mechanical collector or to a fabric filter. Wet suppression may be used for controlling fugitive emissions from sinter machine discharge, screening, or cooling. However, since the sinter is very hot during these operations, much steam and mist are generated. Wet suppression is sometimes used on the sinter as it comes from the cooler. However, the application rate must be controlled since an increased moisture content of the sinter will necessitate higher heat requirements in the blast furnace.

Table 2-13. CONTROL TECHNIQUES FOR IRON PRODUCTION IPFPE SOURCES

Industry: Iron Production	Negligible emissions	IPFPE source typically uncontrolled	Control technologies identified in Section 2.1	FUGITIVE EMISSIONS CAPTURE AND CONTROL METHODS												
				Preventative procedures and operating changes							Capture methods				Removal equipment		
				Wet suppression (water and/or chemical)	Confinement by enclosure	Better control of raw material quality	Better control of operating parameters and procedures	Improved maintenance and/or construction program	Increase exhaust rate of primary control system	Minimize free-fall distance (chute or other device)	Fixed hoods, curtains, partitions, covers, etc.	Movable hoods with flexible ducts	Closed buildings with evacuation		Fabric filter	Scrubber	Hot well
1. Ship or railroad car unloading			✓														
2. Iron ore storage			✓														
3. Iron ore handling and transfer			✓														
4. Limestone storage			✓														
5. Limestone handling and transfer			✓														
6. Coke storage			✓														
7. Coke handling and transfer			✓														
8. Blast furnace flue dust storage	✓																
9. Blast furnace flue dust handling and transfer			✓														
10. Sinter machine windbox discharge	✓			o	x					+	+				+		
11. Sinter machine discharge and screens				x	x			o	o		x				x		
12. Sinter cooler					+						x				x		
13. Sinter storage			✓														
14. Sinter handling and transfer			✓														
15. Blast furnace charging	✓																
16. Blast furnace upsets (slips)						o	o	+									+
17. Blast furnace tapping - iron											+	+			+		
18. Blast furnace tapping - slag											+	+			+		
19. Slag handling				+	+					+	+				+		
20. Slag dumping and storage				+						+							
21. Slag crushing				x							x		+		x		

x Typical control technique.

o In use (but not typical) control technique.

+ Technically feasible control technique.

Fugitive emissions from sintering consist mostly of ore dusts and metal oxides with a mean particulate diameter of 48-180 μm. Only 1-10 percent are less than 5 μm. Exit temperature is 38-149°C (100-300°F). At the discharge end of the sintering process and during cooling, fugitive iron oxides emitted have a mean particulate diameter of 48-180 μm of which 80 percent are less than 100 μm size.[1,8]

Fifteen to ninety percent of the fugitive hot molten fumes, iron oxides and incandescent particulates expelled during blast furnace operations have a mean diameter less than 70 μm. Exit temperatures are 1650-2200°C (3000-4000°F).[2,8]

Control Technology - Control technology options for all IPFPE sources (except sources with negligible emissions or those covered in Section 2.1) are presented in Table 2-13. Control of fugitive emissions by wet suppression is practical when attempting to control emissions from slag handling, dumping, and crushing. Use of water suppression on other portions of the process is not advisable because this would require higher heat requirements in the blast furnace.

Fugitive emissions from handling and transfer of raw materials can be controlled by enclosure of the operations as well as better control of the operating parameters and procedures. For example, conveyor belt systems may be partially covered to prevent wind blown fugitive emissions or totally enclosed to prevent all fugitive emissions. Control of operations such as not overloading transport systems and reducing free fall distances from grab buckets and clam shells, will also reduce fugitive emissions.

Fugitive emissions generated during sinter machine windbox discharge can be effectively controlled by several methods. Wet suppression by means of applying a fine spray to materials as they are discharged from the windbox will

The assumed feed rate of raw materials to produce 1 metric ton of iron was as follows:

- 0.36 Mg (0.40 tons) sinter
- 1.2 Mg (1.2 ton) iron ore
- 0.59 Mg (0.65 ton) coke
- 0.25 Mg (0.28 ton) limestone flux

The product and by-products resulting from this quantity of feed are as follows:

- 1.00 Mg (1.10 tons) iron
- 0.30 Mg (0.33 ton) slag
- 0.05 Mg (0.06 ton) flue dust

The feed rate of raw materials and resulting product and by-product quantities will differ from plant to plant depending on the availability of raw material and the desired product. However, the yearly uncontrolled fugitive emissions listed in Table 2-12 do represent a potential situation.

Not included in the inventory are fugitive emissions from plant haul roads. These sources may be calculated using procedures outlined in Section 2.1. Total model plant uncontrolled process fugitive particulate emissions are 4009 Mg (4400 tons) per year. The largest potential source of fugitive emissions is iron ore handling and storage. Other major potential sources of fugitive emissions are sintering operations and blast furnace tapping.

Characteristics of Fugitive Emissions - Fugitive particulate emissions from iron production consist basically of coke, limestone, and iron ore dusts as well as iron oxides. Coke dust emissions from stockpile, handling and transfer have a mean particulate diameter of 3-10 μm. Limestone dust from stockpiles, handling, and transfer has a mean particulate diameter of 3-6 μm, of which 45-70 percent is less than 5 μm.[2]

Table 2-12 (continued). IDENTIFICATION AND QUANTIFICATION OF POTENTIAL FUGITIVE PARTICULATE EMISSION POINTS FOR IRON PRODUCTION

Source of IPFPE	Uncontrolled fugitive emission factor	Emission factor reliability rating	Model plant fugitive emission inventory	
			Operating parameter, Mg/yr (tons/year)	Uncontrolled emissions Mg/yr (tons/yr)

[a] Emission factor range for iron ore unloading (taconite pellets) derived from data presented in Section 2.1.2. Emission factor for limestone unloading also derived from data presented in Section 2.1.2 assuming 50 percent of coal unloading emission factor.

[b] For complete development of this emission factor, refer to Section 2.1.4. For sources 2, 6, and 20 refer to section 2.1.4 for values for variables in formulas except for D which was assumed to equal 90. For source 4 it was assumed that S = 1.5, D = 90, PE = 100, and K_1, K_2, and K_3 = 1. Reference 1.

[c] Reference 2.

[d] Engineering judgment, assumed 50% of coal handling emissions as reported in Reference 3.

[e] Emissions identified and included in Section 2.2.1. Additional emission factor of 0.055 kg/Mg (0.11 lb/ton) pig iron produced reported in Reference 3.

[f] Blast furnace flue dust is normally handled in a closed system and so a negligible source.

[g] Engineering judgment, assumed equal to sand handling emissions as reported in Reference 3.

[h] Reference 4.

[i] Reference 5.

[j] Engineering judgment, assumed equal to coal handling emissions as reported in Reference 3.

[k] Reference 6.

[l] Reference 7. Emissions for source 18 included in emissions from source 17.

[m] Emission for slag tapping included in iron tapping emission factor.

[n] Engineering judgment, assumed equal to coke handling emission range as described in Section 2.1.1.

[o] Estimated based on crushed stone emission factors for primary and secondary crushers in AP-42 (Reference 3). Note that approximately 65 percent of these emissions will settle out in the plant.

Table 2-12 (continued). IDENTIFICATION AND QUANTIFICATION OF POTENTIAL FUGITIVE PARTICULATE EMISSION POINTS FOR IRON PRODUCTION

Source of IPFPE	Uncontrolled fugitive emission factor	Emission factor reliability rating	Model plant fugitive emission inventory	
			Operating parameter, Mg/yr (tons/year)	Uncontrolled emissions Mg/yr (tons/yr)
13. Sinter storage	b	D	Sinter 44,000 (48,000)	7 (8)
14. Sinter handling and transfer	0.2 kg/Mg sinter[j] (0.4 lb/ton sinter)	E	Sinter 520,000 (570,000)	104 (114)
15. Blast furnace charging	Negligible	E	-	-
16. Blast furnace upsets (slips)	0.0019-0.019 kg/Mg iron produced[k] (0.0038-0.038 lb/ton iron produced)	E	Iron 994,260 (1,093,686)	10 (11)
17. Blast furnace tapping - iron	0.15-0.46 kg/Mg iron produced[k,l] (0.3-0.92 lb/ton iron produced)	E	Iron 994,260 (1,093,686)	423 (465)
	Model values: 0.39-0.49 kg/Mg iron produced[k,l] (0.78-0.92 lb/ton iron produced)	D	-	-
18. Blast furnace tapping - slag	1	-	-	1
19. Slag handling	0.01-0.05 kg/Mg slag[n] (0.02-0.1 lb/ton slag)	C	Slag 298,278 (328,106)	9 (10)
20. Slag storage	b	B	Slag 298,278 (328,106)	49 (54)
21. Slag crushing	1.0 kg/Mg crushed[o] (2.0 lb/ton crushed)	A	Slag 298,278 (328,106)	298[o] (328)

Table 2-12 (continued). IDENTIFICATION AND QUANTIFICATION OF POTENTIAL FUGITIVE PARTICULATE EMISSION POINTS FOR IRON PRODUCTION

Source of IPFPE	Uncontrolled fugitive emission factor	Emission factor reliability rating	Model plant fugitive emission inventory	
			Operating parameter, Mg/yr (tons/year)	Uncontrolled emissions Mg/yr (tons/yr)
3. Iron ore handling and transfer	1.0 kg/Mg ore handled[c] (2.0 lb/ton ore handled)	D	Iron ore 1,680,300 (1,848,300)	1,680 (1,848)
4. Limestone storage	b	D	Limestone 248,565 (273,422)	41 (45)
5. Limestone handling and transfer	0.1 kg/Mg limestone handled[d] (0.2 lb/ton limestone handled)	E	Limestone 248,565 (273,422)	25 (27)
6. Coke storage	b	D	Coke 586,613 (625,474)	56 (63)
7. Coke handling and transfer	See Section 2.2.1[e]			
8. Blast furnace flue dust storage	Negligible[f]	D	-	-
9. Blast furnace flue dust handling and transfer	0.15 kg/Mg flue dust[g] (0.3 lb/ton flue dust)	E	Flue dust 49,713 (54,684)	7 (8)
10. Sinter machine windbox discharge	Negligible[a,h]	-	-	-
11. Sinter machine discharge and screens	0.28-1.22 kg/Mg sinter[a,h] (0.55-2.45 lb/ton sinter)	E	Sinter 520,000 (570,000)	389 (427)
12. Sinter cooler	0.16-0.4 kg/Mg sinter[h,i] (0.32-0.8 lb/ton sinter)	E	Sinter 520,000 (570,000)	145 (160)

Table 2-12. IDENTIFICATION AND QUANTIFICATION OF POTENTIAL FUGITIVE PARTICULATE EMISSION POINTS FOR IRON PRODUCTION

Source of IPFPE	Uncontrolled fugitive emission factor	Emission factor reliability rating	Model plant fugitive emission inventory	
			Operating parameter, Mg/yr (tons/year)	Uncontrolled emissions Mg/yr (tons/yr)
1. Ship or railroad car unloading				
Iron ore - ship unloading Iron ore - rail unloading	Iron ore 0.01-0.015 kg/Mg unloaded[a] (0.02-0.03 lb/ton unloaded)	E	Iron ore unloaded 1,680,300 (1,848,300)	21 (23)
Limestone - ship unloading Limestone - rail unloading	Limestone 0.1 kg/Mg unloaded (0.2 lb/ton unloaded)	E	Limestone unloaded 248,565 (273,422)	25 (27)
2. Iron ore storage				
Loading onto pile	$\frac{(0.02)(K_1)(S/1.5)}{(PE/100)^2}$ kg/Mg material loaded onto pile[b] $\left(\frac{(0.04)(K_1)(S/1.5)}{(PE/100)^2}\right.$ lb/ton material loaded onto pile$\left.\right)$	D	Iron ore loaded 1,680,300 (1,848,300)	218 (240)
Vehicular traffic	$\frac{(0.065)(K_2)(S/1.5)}{(PE/100)^2}$ kg/Mg material stored[b] $\left(\frac{(0.13)(K_2)(S/1.5)}{(PE/100)^2}\right.$ lb/ton material stored$\left.\right)$	D	Iron ore stored 1,680,300 (1,848,300)	85 (94)
Loading out	$\frac{(0.025)(K_3)(S/1.5)}{(PE/100)^2}$ kg/Mg material loaded out[b] $\left(\frac{(0.05)(K_3)(S/1.5)}{(PE/100)^2}\right.$ lb/ton material loaded out$\left.\right)$	D	Iron ore loaded out 1,680,300 (1,848,300)	364 (400)
Wind erosion	$\frac{(0.055)(S/1.5)}{(PE/100)^2}\frac{D}{90}$ kg/Mg material stored[b] $\left(\frac{(0.11)(S/1.5)}{(PE/100)^2}\frac{D}{90}\right.$ lb/ton material stored$\left.\right)$	D	Iron ore stored 1,680,300 (1,848,300)	62 (68)

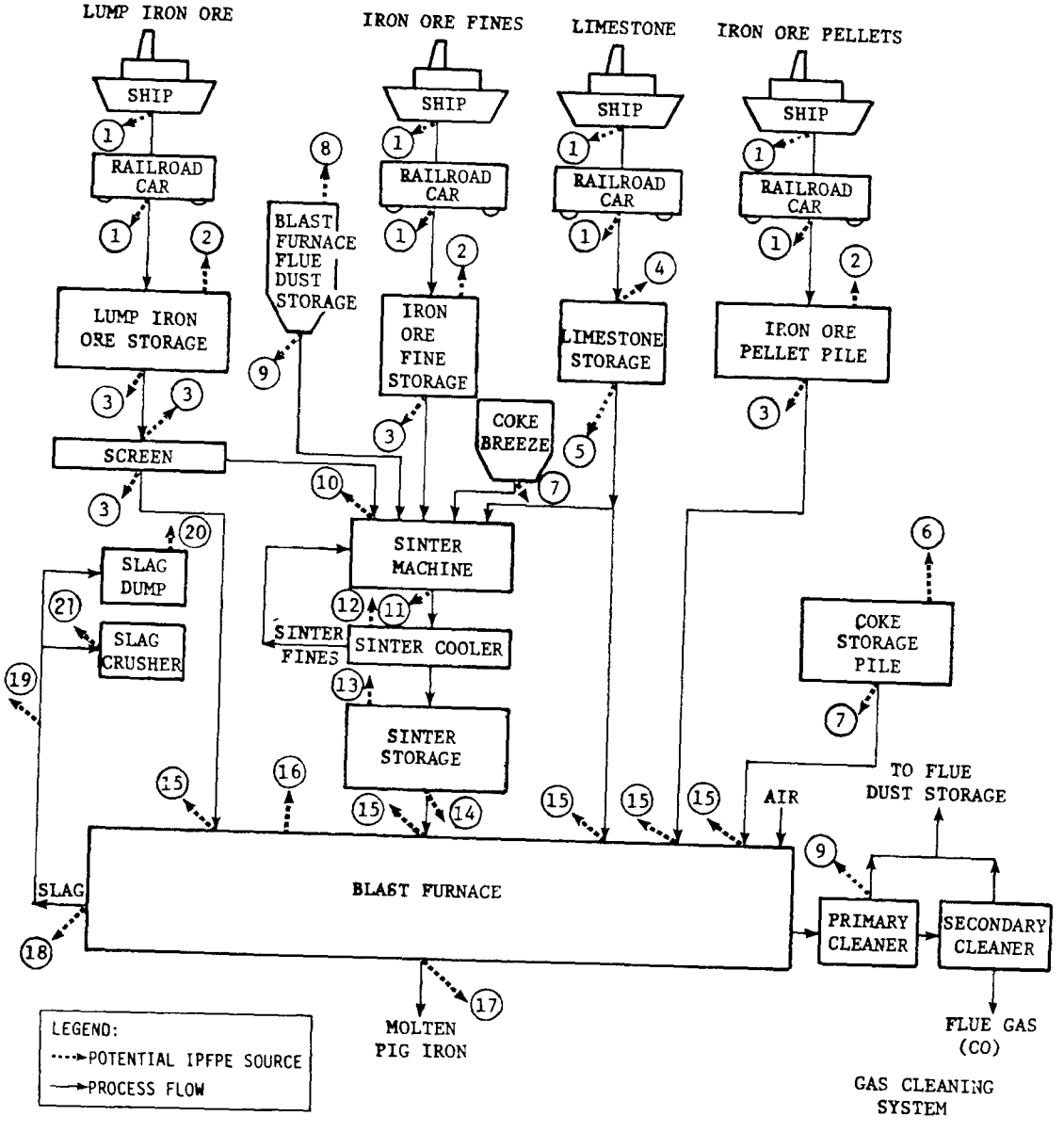

Figure 2-4. Process flow diagram for iron production showing potential industrial process fugitive particulate emission points.

slag as it flows from the blast furnace. Slag is often processed for use as a fill material or aggregate.

A process flow diagram for iron production is shown in Figure 2-4. Each potential process fugitive emission point is identified and explained in Table 2-12. A common dust source found at iron-producing facilities but not specifically included in the Figure or Table is plant roads. Proper evaluation of this emission category is explained in Section 2.1.

IPFPE Emission Rates - Shown on Table 2-12 are potential uncontrolled emission factor ranges for the IPFPE sources. Since these are potential uncontrolled emission rates, the level of control must be considered if applied to a specific plant. Also included are reliability factors for each estimate.

The estimates of ship or rail unloading were obtained from Section 2.1 of this report. Storage loss emission estimates were obtained from Compilation of Air Pollutant Emission Factors, AP-42.[1] Handling and transfer emission rates were determined using the best available data and engineering judgement. Blast furnace and sintering emissions were the latest emission estimates.

Example Plant Inventory - The example plant inventory for iron production as shown in Table 2-12 presents potential fugitive emission quantities from the various uncontrolled sources within the process. The inventory represents a plant which produces 1,290,000 Mg (1,420,000 tons) pig iron per year. The plant inventory is not meant to display a typical plant, but merely a potential set of circumstances.

skip car hoist or by belt conveyor. Coke, raw iron ore, and limestone are also stored in bins at the furnace and are charged in the same manner.

The blast furnace reduces the iron ore and iron-bearing materials to produce pig iron. Iron-bearing materials (iron ore, sinter, pellets, mill scale, slag, scrap iron), coke and fluxes (limestone, dolemite, etc.) are charged into the top of the furnace and referred to as burden. Heated air is blown into the furnace near its base or hearth line through tuyeres. In some instances fuel oil or powdered coke is also blown into the bottom. The burden descends down the furnace and the iron ore and iron bearing materials are reduced and melted by the countercurrent flow of the hot reducing gases created by the combustion of coke. Occassionally slips may occur as the burden decends. Slips are due to an initial wedging or bridging of the stock in the furnace. When this occurs, the material underneath continues to move downward and a void is created. The void tends to increase in size until the "bridge" collapses, causing a sudden downward movement of the stock above and a sudden release of emissions.

Hot metal is tapped from the furnace through a hole or notch and is poured into submarine or torpedo railroad cars and delivered to the steel making furnaces. Slag from the blast furnace is either tapped from a higher notch than the hot metal or removed from the furnace through the iron notch during a cast. The slag is guided in runners or troughs and discharged into a slag pit adjacent to the blast furnace or into a slag thimble for transporting to a slag dump or other area. The slag going to the slag pit adjacent to the blast furnace can be water-sprayed or air-cooled and then removed by trucks. Slag granulators are also used for processing

2.2.2 Iron Production

Process Description - Pig iron is the result of smelting iron ore, iron-bearing materials and fluxes with a carbonaceous agent, usually coke, in a blast furnace. About 90 percent of the pig iron produced in the United States is consumed in making steel; the remainder is used for iron and steel castings.

Fine particles, whether in natural ores or in concentrates, are undesirable as part of the blast furnace feed. The most desirable size for blast furnace feed is between 0.64 and 2.5 cm (0.25 and 1.0 inch). Of the numerous methods available for agglomeration, sintering is most often found at the steel mill.

In the sintering process, a mixture of iron ore fines, iron-bearing materials or concentrates, coke fines, and steel plant waste materials (such as blast furnace flue dust, mill scale, etc.) are mixed and then spread on a traveling grate. The traveling grate is like an endless shallow trough with small openings in the bottom. The bed of material on the grate is ignited on the top by burners fired with oil, natural gas, or coke oven gas. As the grate moves slowly toward the discharge end, air is pulled down through the bed to support combustion. As the coke in the bed burns, the heat generated agglomerates the small particles. At the discharge end of the machine, the sinter is crushed to proper size, then cooled and finally screened. In some cases, limestone fines are also added to the sinter feed to produce a self-fluxing sinter. This replaces part of the limestone normally charged into the blast furnace.

Very little sinter is stored in open piles. Usually, it is carried directly to bins at the blast furnace where it is weighed and transferred to the top of the furnace by a

26. Barnes, T.M., H.W. Lownie, Jr. and J. Varga, Jr. Summary Report on Control of Coke Oven Emissions. Battelle Memorial Institute. Columbus, Ohio. Prepared for the American Iron and Steel Institute. December 31, 1973.

27. International trip report for coke plant in Germany. Andrew Trenholm, U.S. Environmental Protection Agency, Emission Standards and Engineering Division, Research Triangle Park, North Carolina. February 18, 1976. pp. 32.

28. Source Testing of a Stationary Coke Side Enclosure, Draft report prepared by Clayton Environmental Consultants, Inc., for the Environmental Protection Agency, Contract No. 68-02-1408, Task No. 10, Volume 1 (November 5, 1975).

29. Pengidore, D.A. Enclosed Coke Pushing and Quenching System Design Manual. National Steel Corp. Prepared for the U.S. Environmental Protection Agency, Office of Research and Development under Contract No. 68-02-0622. September 1973.

30. Reference 21. p. 7-7.

18. McClelland, R.O. Coke Oven Smokeless Pushing System Design Manual. Koppers Company, Pittsburgh, Penn. and Fort Motor Co. Prepared for U.S. EPA under Contract No. 68-02-0630, ROAP 21AFF-010. Publication No. EPA-650/2-74-076. September 1974.

19. Pengidore, D.A. Enclosed Coke Pushing and Quenching System Design Manual. National Steel Corporation, Weirton, West Virginia. Prepared for U.S. EPA under Contract No. 68-02-0622. Publication No. EPA-650/2-73-028. September 1973.

20. Trenholm, A.R. Standards Support and Environmental Impact Statement: Standards of Performance for Coke Oven Batteries. U.S. Environmental Protection Agency, Emission Standards and Engineering Division. Research Triangle Park, North Carolina. May 1976. Draft.

21. Trenholm, A.R. Standards Support and Environmental Impact Statement: An Investigation of the Best Systems of Emission Reduction for the Pushing Operation on By-Product Coke Ovens. U.S. Environmental Protection Agency, Emission Standards and Engineering Division. Research Triangle Park, North Carolina. July 1976. Draft.

22. Lownie, H.W., Jr., and A.O. Hoffman. Study of Concepts for Minimizing Emissions from Coke-Oven Door Seals. Battelle Columbus Laboratories. Columbus, Ohio. Prepared for U.S. Environmental Protection Agency, Washington, D.C. under Contract No. 68-02-1439, ROAP No. 21 AQR-012. July 1975.

23. McClelland, R.O. Coke Oven Smokeless Pushing System Design Manual. Koppers Company, Inc. Pittsburgh, Pennsylvania. Prepared for the U.S. Environmental Protection Agency under Contract No. 68-02-0630. September 1974.

24. The Particle Size Distribution of Coke Side Emissions from By-Product Coke Ovens. Division of Stationary Source Enforcement, U.S. Environmental Protection Agency, Washington, D.C., Draft. p. 10.

25. Reference 21, p. 4-24.

8. Background Information for Establishment of National Standards of Performance for New Sources, Iron and Steel Industry. Prepared by Environmental Engineering, Inc., and Herrick Associates. Gainesville, Fla. March 1971.

9. Purdy, J.B., and R.B. Iden. Sampling of Coke Oven Door Emissions, Preliminary Report. Prepared by Battelle Laboratories, Columbus, Ohio for U.S. Environmental Protection Agency under Contract No. 68-02-1409, Task 34. May 1976.

10. Kertcher, L.F., and B. Linskey. Economics of Coke Oven Charging Controls. JAPCA 24:765-771. August 1974.

11. Jacko, Robert. Coke Oven Emission Measurement During Pushing. Paper presented at Symposium on Fugitive Emissions, Hartford, Connecticut. EPA 600/2-76-246. September 1976.

12. Emission Testing and Evaluation of Ford/Koppers Smokeless Coke Pushing System. Prepared by Clayton Environmental Consultants, Inc., for the U.S. Environmental Protection Agency, Contract No. 68-02-0630, Volume I, Table 8.0-1 (May 5, 1976).

13. Measurement of Coke Pushing Particulate Emissions at CF&I Steel Corporation Coke Plant. Prepared by York Research for CF&I Steel Corporation, Report No. 7-9167 (October 4, 1976).

14. Appendix III to letter from Edward Roe, Great Lakes Carbon Corp. to Don Goodwin, Environmental Protection Agency (April 14, 1975).

15. U.S. Steel Corp. Clairton Works. Emission Tests of Shed on Number 17 Coke Oven Battery. 1975.

16. Study of Coke-Side Coke Oven Emissions. Draft report prepared by Clayton Environmental Consultants, Inc. for the Environmental Protection Agency, Contract No. 68-02-1408, Task No. 14, Volume 1. January 16, 1976.

17. Memo. Gas Cleaning Requirements for Coke Pushing Emissions - Burns Harbor Coke Side Shed. From C.R. Symons, Bethlehem Steel Corp. to P.D. Kostenbader, Bethlehem Steel Corp., January 17, 1975.

REFERENCES FOR SECTION 2.2.1

1. Varga, J. Jr., Screening Study on By-Products Coke-Oven Plants. Draft report. Battelle Memorial Institute. Columbus, Ohio. Prepared for U.S. EPA, Research Triangle Park, North Carolina under Contract No. 68-02-0611. September 1974.

2. Barnes, T.M., Hoffman, A.O., and Lownie, H.W., Jr. Evaluation of Process Alternatives to Improve Control of Air Pollution from Production of Coke. Battelle Memorial Institute. Columbus, Ohio. Prepared for the Dept. of HEW, Contract No. PH 22-68-65. January 1970.

3. Varga, Jr. Jr., and H.W. Lownie, Jr. A Systems Analysis Study of the Integrated Iron and Steel Industry. Battelle Memorial Institute. Columbus, Ohio. Prepared for the Dept. of HEW under Contract No. 22-68-65. May 1969.

4. Open Dust Sources Around Iron and Steel Plants, Draft. Midwest Research Institute. Prepared for U.S. Environmental Protection Agency, Industrial Environmental Research Laboratory. Contract No. 68-02-2120. Research Triangle Park, North Carolina. November 2, 1976.

5. A Study of Fugitive Emissions from Metallurgical Processes. Midwest Research Institute. Prepared for the U.S. Environmental Protection Agency, Industrial Environmental Research Laboratory. Contract No. 68-02-2120. Monthly Progress Report No. 14. Research Triangle Park, North Carolina. September 10, 1976.

6. Air Pollutant Emission Factors. Final Report. Resources Research, Inc. Reston, Va. Prepared for National Air Pollution Control Administration, Durham, N.C., under Contract No. CPA-22-69-119. April 1970.

7. Iversen, Reid E. Personal Communication, U.S. Environmental Protection Agency. Research Triangle Park, North Carolina. December 8, 1976.

c. $2,264,000 for a hood with a scrubber on a rail-car;

d. $4,557,000 for a shed and scrubber; and

e. $7,823,000 for a shed and wet electrostatic precipitator.

The higher capital cost of the shed-precipitator system is partially offset by lower operating costs that result from a low pressure drop.[30]

The control devices used with the capture systems discussed above are scrubbers and wet electrostatic precipitators. Both have been demonstrated to achieve better than 98 percent collection of emissions when installed on a shed. A venturi scrubber has achieved 99 percent cleaning of emissions from a hood and can be expected to perform the same on an enclosed car. The Aronetics wet scrubber has been shown to achieve better than 99 percent collection on fine ferroalloy fume and is used on one enclosed quench car.[29]

A factor that affects the performance of any system to control pushing emissions is the "greenness" of the coke pushed. Green coke, with high levels of volatile matter, will result in a greater quantity of uncontrolled emissions, hence a greater load for the control system. Any assessment of the performance of a control system should consider this factor (see Table 2-10 for greenness variations).

One other significant factor is the emissions from the hot coke car as it travels to the quench station after a push. When a shed is used, these emissions are captured until the car exits the shed. For enclosed cars and hoods, capture varies with design. Those designs where the car is covered and drafted will control emissions until the car reaches the quench station. Where no cover is used, the emissions are controlled after the car moves away from the oven pushed.

Examples of installed costs for these technologies, adjusted to November 1975, are as follows. Based on a coke capacity of 746,500 Mg/yr (821,000 ton/yr), these costs are:

a. $3,250,000 for an enclosed car with a scrubber on a railcar;

b. $3,632,000 for a hood and stationary scrubber;

one of three roughly defined categories. These are: (1) sheds over the coke side of a battery; (2) enclosures or hoods on the hot coke car; and (3) bench-mounted hoods over the hot coke car.

Sheds are literally a building over the entire coke side of a battery. Emissions from the pushing operation are contained in the shed and slowly evacuated through a control device. The capture efficiency has been estimated in two cases as 91 percent and 85 percent.[14,16]

Enclosures on the hot coke car vary in design. All, however, embody a close-fitting enclosure that minimizes any openings to the atmosphere. Size and location of these openings and the amount of draft applied to the enclosure are important parameters that affect capture efficiency. Although no measurements have been made, visual observations indicate capture performance comparable to a shed.[25,26] Enclosed quench cars distinguish themselves by whether they are single spot or movable during pushing and whether draft is created by fans or other means.

The third category, bench mounted hoods, exhibit great variety in design and performance. Generally, they entail greater areas open to the atmosphere than enclosed cars, typically at the interface between the hood and hot coke car. Greater gas volumes are required, though not as great as a shed. Capture efficiency varies widely with design. Efficiency increase with larger hoods, greater gas volumes, and smaller open areas. Capture efficiency for the better designs (the closest fitting hoods with sufficient gas volume) may equal the capture performance of sheds or enclosed hot coke cars, if combined with operating practices to minimize the greenness of the coke.[27,28]

Table 2-11. CONTROL ALTERNATIVES AND COSTS FOR CONTROLLING CHARGING EMISSIONS[a]

Method	Capital cost,[b] $
Charing on the main with stage or sequential charging	
with jumper pipe	140,000[c]
addition of a dual collecting main	900,000
Pipeline charging	negligible

[a] This represents additional costs above a typical larry car for an existing battery.

[b] Data obtained from References 10 and 20. This represents costs for a battery with 60 ovens, 4 m tall.

[c] Without installation of additional gas off-take holes.

Coking (oven lid, standpipe, and door leaks) - Emissions from leaks during the coking cycle can be reduced by good maintenance and replacement practices. For oven lids and luted doors, prompt sealing after they are replaced and resealing when necessary is one of the best techniques. Oven door hoods over individual doors and sheds over the coke side of a battery (which is a technique to capture pushing emissions) also will effectively capture emissions from doors on that side of the battery. Gas cleaning efficiencies in excess of 85 percent for door emissions have been achieved with wet electrostatic precipitators.

Pushing - To capture pushing emissions there is a variety of systems that are in use, under construction or planned throughout the world. More concepts are expected to be developed. Most of these systems do, however, fall into

essentially uncontrolled to excellent control. Among these factors are the (1) strength of aspiration; (2) degree to which oven openings to the atmosphere are kept closed throughout a charge; (3) use of aspiration at both ends of the oven; (4) maintenance of a free space at the top of the oven for the evolved gases to pass freely to the ascension pipes; (5) maintenance of a free passage through the ascension pipe; and (6) control of timing of steps in charging operations. The control efficiency for the best form of this system (stage charging) has been estimated as 99+ percent for any specific charge.[20]

Pipeline charging is a closed system. Coal is charged through pipes permanently connected to the ovens. Evolved gases and entrained coal fines are recovered in a charging main and recycled to the coal preheater plant. Some potential for emissions from oven leaks still exists and emissions from the coal preheating plant (discharging through a stack) should be considered. Though operating problems have been experienced with the first installations now in operation, the potential control efficiency is judged to be high.

Table 2-11 presents cost estimates for different control alternatives for controlling charging emissions.

these are a variety of polycyclic organic compounds that are carcinogenic and mutagenic. The amount of organic compounds in the emissions is greatest for charging and oven leaks.

Considerable analysis of particle sizes has been done for emissions from the pushing operation. The data show that for pushing emissions captured by a shed (large particles settle under a shed and are not captured) 27-80 percent are <10 μm and 15-26 percent are <2 μm. One set of data on emissions captured by a hood (large particles are captured) show 11 percent <10 μm and 4 percent <2 μm.[24]

Control Technology[1-3,8-10,18-23] - Charging and pushing operations and oven leaks are the major fugitive emission sources in a coke plant. Several methods exist for the control of emissions from these sources. Control technology options for coking IPFPE sources (except those covered in Section 2.1) are presented below.

Coal crushing and handling - Emissions from the coal preparation operations are controlled by the use of enclosed conveyor systems, transfer points, and various processing equipment points. One or several particulate collection devices, such as cyclones and fabric filters, are usually used for separating particulates from the exhaust air.

Charging - Methods for the control of charging emissions mostly consist of aspirating the evolved gases into the battery main where they are ducted to the recovery plant. Some batteries, where preheated coal is charged, use a closed pipeline system. Descriptions of these methods follows.

Charging on the main consists of drawing the evolved gases into the battery main, and then into the recovery system by a steam ejector located at the top of the oven ascension pipe. Many factors influence the performance of this type of system, which ranges over a continuum from

The emission factors for the various coking operations (other than handling) are based on very limited test data. Therefore, these values received a reliability rating of "C", which indicates that engineering judgment was used with the limited test data in estimating emission rates. Consequently, actual emission rates at a given facility will probably differ significantly (for specific operations) from those in Table 2-9 and 2-10.

Example Plant Inventory - The example plant inventory for coke production as shown in Table 2-9 presents potential fugitive particulate emission quantities from the various uncontrolled sources within the process. The inventory represents a plant which produces 1,000,000 Mg (1,102,000 tons) of sized coke per year suitable for blast furnace operations. The plant inventory is not meant to display a typical plant, but merely a potential set of circumstances.

The coal feed rate to produce 1 Mg of sized coke was as follows:

- 1.55 Mg (1.71 tons) of raw coal
- 1.54 Mg (1.70 tons) of coal charged

Not included in the inventory are fugitive emissions from plant haul roads. There sources may be calculated using procedures outlined in Section 2.1. Major sources of fugitive emissions include coal charging, coke pushing, and oven door leaks.

Characterization of Fugitive Emissions - Fugitive particulate emissions from coking operations consist basically of coal and coke dust and polycyclic organic hydrocarbons. Coal dust emissions from stockpiling, handling, and transfer have a mean particulate diameter of 1-10 μm.

In addition to emissions of coal and coke dust, coke ovens emit hydrocarbons and organic compounds. Included in

Table 2-10. PUSHING EMISSION FACTORS

kg/Mg coal charged (lb/ton coal charged)

Degree of greenness	Shed[a]	Travelling hood[b]	Direct-uncaptured plume[b]
Green coke	0.32[h] - 0.5[i] (0.65 - 1.0)	1.0[i] - 1.8[d] (2.1 - 3.5)	1.5 - 2.0[e] (3 - 4)
Moderately green	0.28[h] (0.57)	1.65[d] (2.3)	1.0[c] (2.1)
Cleanly pushed coke	0.17[f,g] (0.35)	0.75[d] (1.5)	0.19[e] - 0.26[c] (0.38 - 0.52)

[a] Includes most of travel emissions.

[b] Does not include travel emissions.

[c] Reference 11.

[d] Reference 12.

[e] Reference 13.

[f] Reference 14.

[g] Reference 15.

[h] Reference 16 and 28.

[i] Reference 17.

Table 2-9 (continued). IDENTIFICATION AND QUANTIFICATION OF POTENTIAL FUGITIVE PARTICULATE EMISSION POINTS FOR COKE MANUFACTURING

Source of IPFPE	Uncontrolled fugitive emission factor	Emission factor reliability rating	Model plant fugitive emission inventory	
			Operating parameter, Mg/yr (tons/year)	Uncontrolled emissions Mg/yr (tons/yr)
5. Coal charging	0.5-5.0 kg/Mg coal charged[e,f,g,h] (1.0-10.0 lb/ton)	C	Coal charged 1,542,500 (1,699,800)	4,242 (4,674)
6. Coking (door leakage)	0.20-0.45 kg/Mg coal charged[e,f,i] (0.40-0.90 lb/ton)	C	Coal charged 1,542,500 (1,699,800)	501 (552)
7. Pushing	See Table 2-10		Coal charged 1,542,500 (1,699,800)	
8. Quenching	Clean water: 0.6 kg/Mg coke produced[j] (1.2 lb/ton)	C	Coke produced 1,000,000 (1,102,000)	600 (660)
	Highly contaminated water: 1.0-3.0 kg/Mg coke produced[j] (2.0-6.0 lb/ton)	C		
9. Coke handling	0.012-0.065 kg/Mg coke produced[k] (0.023-0.13 lb/ton)	E	Sized coke produced 1,000,000 (1,102,000)	38 (42)

[a] Coal hopper car unloading emission factor as developed in Section 2.1.2.

[b] For complete development of this emission factor refer to Section 2.1.4. For this example it was assumed that $S = 4.0$, $D = 90$, $PE = 100$, $K_1 = 0.75$, $K_2 = 0.5$, and $K_3 = 0.78$. Reference 4.

[c] Coal conveying and transfer emission factor as developed in Section 2.1.1. Reference 5.

[d] Included in coal handling and transfer emission factor.

[e] Reference 6.

[f] Reference 7.

[g] Reference 2.

[h] Reference 8.

[i] Reference 9.

[j] Personal communication with Carl Edlund, U.S. Environmental Protection Agency, Division of Stationary Source Enforcement, Washington, D.C., March 11, 1977. Emissions are for quench towers with baffles.

[k] Coke conveying and transfer emission factor as developed in Section 2.1.1.

Table 2-9. IDENTIFICATION AND QUANTIFICATION OF POTENTIAL FUGITIVE PARTICULATE EMISSION POINTS FOR COKE MANUFACTURING

Source of IPFPE	Uncontrolled fugitive emission factor	Emission factor reliability rating	Model plant fugitive emission inventory	
			Operating parameter, Mg/yr (tons/year)	Uncontrolled emissions Mg/yr (tons/yr)
1. Coal unloading	0.2 kg/Mg coal unloaded[a] (0.4 lb/ton)	E	Coal charged 1,542,500 (1,699,800)	309 (340)
2. Coal storage				
Loading onto pile	$\frac{(0.02)(K_1)(S/1.5)}{(PE/100)^2}$ kg/Mg material loaded onto pile[b] $\left(\frac{(0.04)(K_1)(S/1.5)}{(PE/100)^2}\right.$ lb/ton material loaded onto pile$\left.\right)$	D	Coal loaded 1,550,000 (1,708,100)	62 (68)
Vehicular traffic	$\frac{(0.065)(K_2)(S/1.5)}{(PE/100)^2}$ kg/Mg material stored[b] $\left(\frac{(0.13)(K_2)(S/1.5)}{(PE/100)^2}\right.$ lb/ton material stored$\left.\right)$	D	Coal stored 1,550,000 (1,708,100)	134 (148)
Loading out	$\frac{(0.025)(K_3)(S/1.5)}{(PE/100)^2}$ kg/Mg material loaded out[b] $\left(\frac{(0.05)(K_3)(S/1.5)}{(PE/100)^2}\right.$ lb/ton material loaded out$\left.\right)$	D	Coal load out 1,550,000 (1,708,100)	81 (87)
Wind erosion	$\frac{(0.055)(S/1.5)}{(PE/100)^2}\ \frac{D}{90}$ kg/Mg material stored[b] $\left(\frac{(0.11)(S/1.5)}{(PE/100)^2}\ \frac{D}{90}\right.$ lb/ton material stored$\left.\right)$	D	Coal stored 1,550,000 (1,708,100)	227 (250)
3. Coal conveying and transfer	0.02-0.48 kg/Mg coal charged[c] (0.04-0.96 lb/ton)	E	Coal charged 1,542,500 (1,699,800)	231 (250)
4. Coal pulverizing and screening	d			d

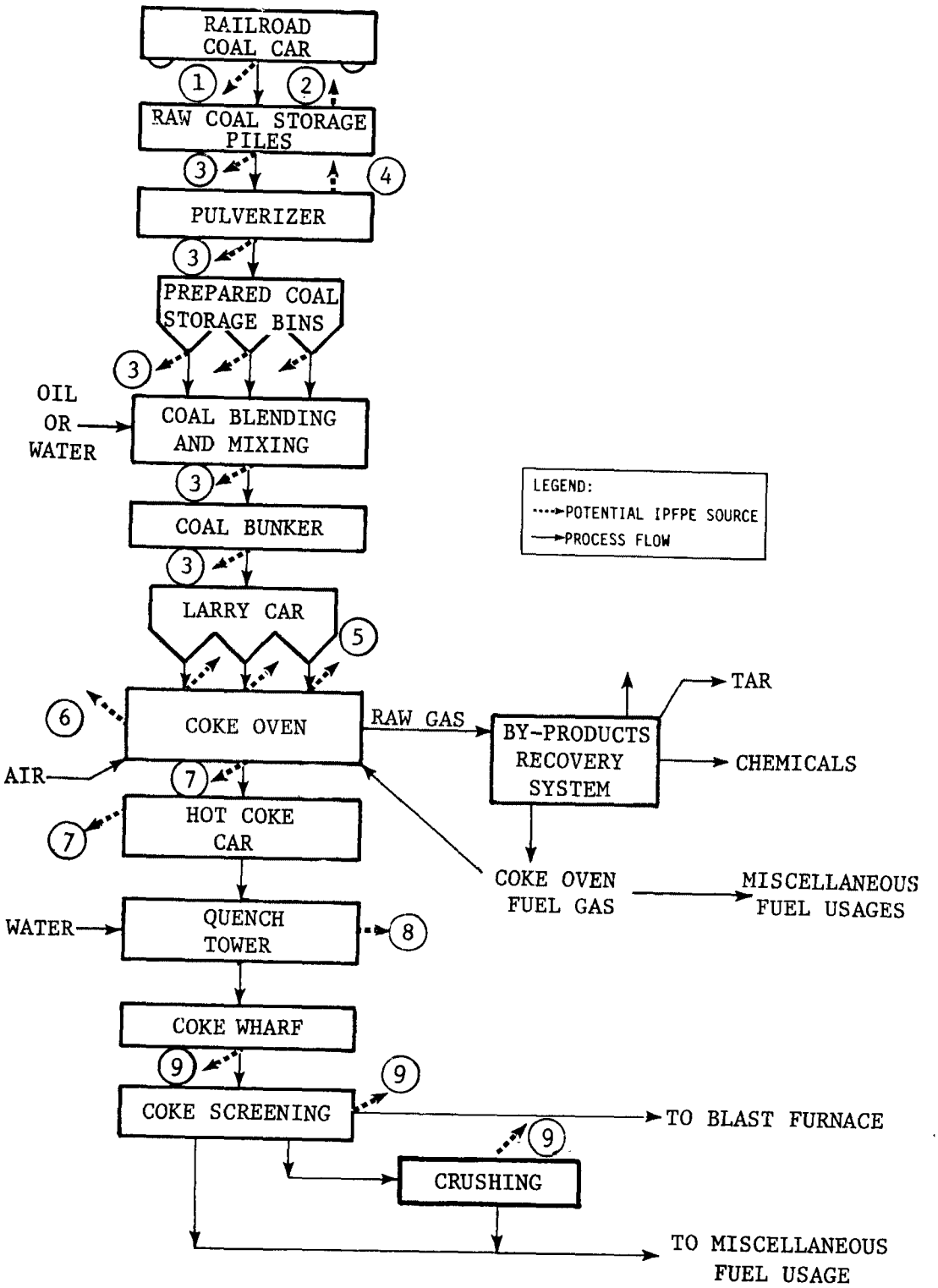

Figure 2-3. Process flow diagram for coke manufacturing showing potential industrial process fugitive particulate emission points.

through flues or standpipes on each oven and collected in a large duct that extends the length of a battery (the battery main). These gases are piped through the main to the by-product recovery section which separates from the gas such coal chemicals as tar, light aromatic compounds and ammonia. The coke-oven gases leaving the by-product recovery plant are used as fuel.

Upon completion of the coking cycle, doors are removed from each end of the oven and the incandescent coke is pushed into a hot-coke car by a large ram. The hot-coke, or quenching, car transports the coke to a quenching tower, a chimney-like structure, in which the coke is deluged with water. The damp, quenched coke is then deposited onto a sloping wharf where it drains and cools to a uniform moisture content and temperature. The coke is then screened into three sizes called blast-furnace coke, nut coke, and breeze, which is the undersize. Some plants grind nut coke to make additional breeze for sintering operations; others sell it for use in electric smelting of alloys.

A process flow diagram for coke manufacturing is shown in Figure 2-3. Each potential process fugitive particulate emission source is identified and explained in Table 2-9. A dust source category common to all coke manufacturing plants, but not specifically included in the Figure or Table, is plant roads. Proper evaluation of this category is explained in Section 2.1.

IPFPE Emission Rates - Table 2-9 presents a summary of uncontrolled emission factors for the coke production IPFPE sources. Since these are potential uncontrolled emission rates, the site-specific level of control must be considered for application to a specific plant. Also included are reliability factors for each estimate.

2.2 IRON AND STEEL PRODUCTION

2.2.1 Coke Manufacturing

Process Description[1,2,3] - Coke is the nonvolatile residue from the distillation of coal in the absence of air. The three processes available for coal distillation are the beehive process, the by-product process, and the form coke process. Since the by-product process accounts for more than 98 percent of the coke produced, only this process will be discussed.

The raw coal is pulverized to sizes from 0.02 to 0.3 cm (0.006 to 0.125 inches) then transferred to prepared coal storage bins. Coals with low, medium or high volatilities are blended and oil or water may be added for bulk density control. The mixture is then transported to the coal storage bunkers on the coke oven batteries. (The preheated coal coking process transfers blended coal to the preheater directly).

A weighed portion or specific volume of coal is discharged from the coal bunker into a larry car, a vehicle fitted with coal hoppers that rides on top of the battery on a wide-gauge railroad track. The coal is transferred into the ovens from the hoppers through opened coal-charging ports in the top of empty ovens. In a coke-oven battery, from about 20 to 100 slot ovens are arranged side-by-side in a row, with common sidewalls. One oven is charged at a time such that the charges will be staggered throughout the day.

After charging, lids are placed on the ports for the duration of the 15 to 40 hour coking cycle. The shorter cycles are for production of blast furnace coke and the longer cycles for foundry coke. During a cycle the ovens are maintained at a temperature of approximately 1100°C (2000°F). Gases evolved during the heating are exhausted

8. Hardwood, Colin and Paul Ase. Field Testing of Emission Control for Asbestos Manufacturing Waste Piles, Draft. Illinois Institute of Technology, Research Institute. Prepared for the U.S. Environmental Protection Agency. Contract No. 68-02-1872.

REFERENCES FOR SECTION 2.1.5

1. Compilation of Air Pollutant Emission Factors, Supplement No. 5. U.S. Environmental Protection Agency, Office of Air and Waste Management and Office of Air Quality Planning and Standards. Research Triangle Park, North Carolina. December 1975.

2. Jutze, G. and K. Axetell. Investigation of Fugitive Dust Volume I - Sources, Emissions, and Control. PEDCo-Environmental Specialists, Inc., Cincinnati, Ohio. Prepared under Contract No. 68-02-0044, Task Order No. 9. June 1974.

3. PEDCo-Environmental Specialists, Inc. Evaluation of Fugitive Dust Emissions from Mining, Task 1 Report Identification of Fugitive Dust Sources Associated with Mining. U.S. Environmental Protection Agency. Industrial Environmental Research Laboratory, Resource Extraction and Handling Division, Cincinnati, Ohio. Prepared under Contract No. 68-02-1321, Task Order No. 36. April 1976.

4. Chepil, W.S. Soil Conditions that Influence Wind Erosion. U.S. Department of Agriculture, Washington, D.C. Technical Bulletin No. 1185. 1958.

5. Unpublished data obtained from several manufacturers of chemical soil stabilization compounds. PEDCo-Environmental Specialists, Inc., Cincinnati, Ohio. October 1976.

6. Dean, K.C. and R. Havens. Reclamation of Mineral Milling Wastes. Presented at Annual AIME Meeting, San Francisco, California. February 1972.

7. Cowherd, C. Jr., K. Axetell, Jr., C. Guenther, Jr., and G.A. Jutze. Development of Emission Factors for Fugitive Dust Sources. Midwest Research Institute. Prepared for U.S. Environmental Protection Agency. Report-450. June 1974.

the costs are \$0.05 to \$0.11 per m^2 (\$200 to \$450 per acre).[6] The costs of physical covering are highly dependent on the local availability of a cheap, environmentally acceptable cover material such as wood bark, smelter slag, or gravel. Fill dirt costs \$0.06 to \$0.15 per m^2 (\$250 to \$600 per acre) for a 4-inch cover.[2] While applying dirt cover, water should be used during grading operations to minimize fugitive dust emissions.

Additional control techniques will be discussed in reference 8 to be published in July 1977.

Table 2-8. CONTROL TECHNIQUES FOR WASTE DISPOSAL SITES

Emission points	Control procedures	Efficiency
Handling	Keep material wet	100%
	Covered or enclosed hauling	No estimate
	Minimize free fall of the material	No estimate
Dumping	Spray bar at dump area	50%
	Minimal free fall of material	No estimate
	Semi-enclosed bin	No estimate
Wind Erosion	Covering with dirt or stable material	100%
	Chemical stabilization[a]	80%
	Revegetation[a]	25%-100%
	Rapid reclamation of newly filled areas	No estimate
Grading	Watering	50%

[a] Reference 2.

of covering these wastes with earth and reclaiming the land by planting a vegetative cover.

For wastes which are pumped to a disposal site and subsequently leave a dry, exposed surface, (e.g., tailings), complete crusting of the surface material can reduce emissions as estimated in the Emission Rates section by 80 percent.[4] Emission reductions can be achieved by either chemical or vegetative stabilization of the tailings.

There are numerous methods for stabilizing erodible waste piles--chemical, vegetative, or physical. Costs for chemicals, which constitute more than half the total cost of chemical stabilization, range from \$0.02 to \$0.18 per m^2 (\$90 to \$720 per acre).[5] Where the surface does not contain phytotoxic compounds and is amenable to vegetative growth,

Inventory Techniques - It is not possible to provide a general technique for estimating total plant emissions from this source category because of the wide range of waste material characteristics and disposal procedures.

Characterization of Fugitive Emissions - The emissions would be the same chemically as the waste material unless it contained a component that could be selectively eroded because of its smaller particle size or low density. As with storage piles, the size distribution of emissions would be somewhat independent of the size of the waste material, since only the fraction less than about 100 μm diameter would become airborne.

Control Technology - Possible controls for reducing emissions from waste disposal operations and their estimated efficiencies are presented in Table 2-8 and discussed in the following text.

Small volume wastes that are especially dusty, such as fly ash or street sweepings, are best handled as a slurry or wetted in order to prevent dust losses. Pug mills are sometimes used in the lime industry to thoroughly moisten kiln dust before transport to the disposal site. If the waste material must be kept dry to eliminate corrosion or chemical reactivity problems, it should be handled with the same care as process material to minimize fugitive dust emissions. Fugitive dust from waste disposal operations is sometimes a problem through oversight or lack of interest. After spending hundreds of thousands of dollars to remove particulate air pollutants with highly efficient electrostatic precipitators or baghouses, it is foolish not to take such precautions as covering the material removed from the collection equipment while hauling it to a dumpsite. Reasonable environmental policies would also indicate advisability

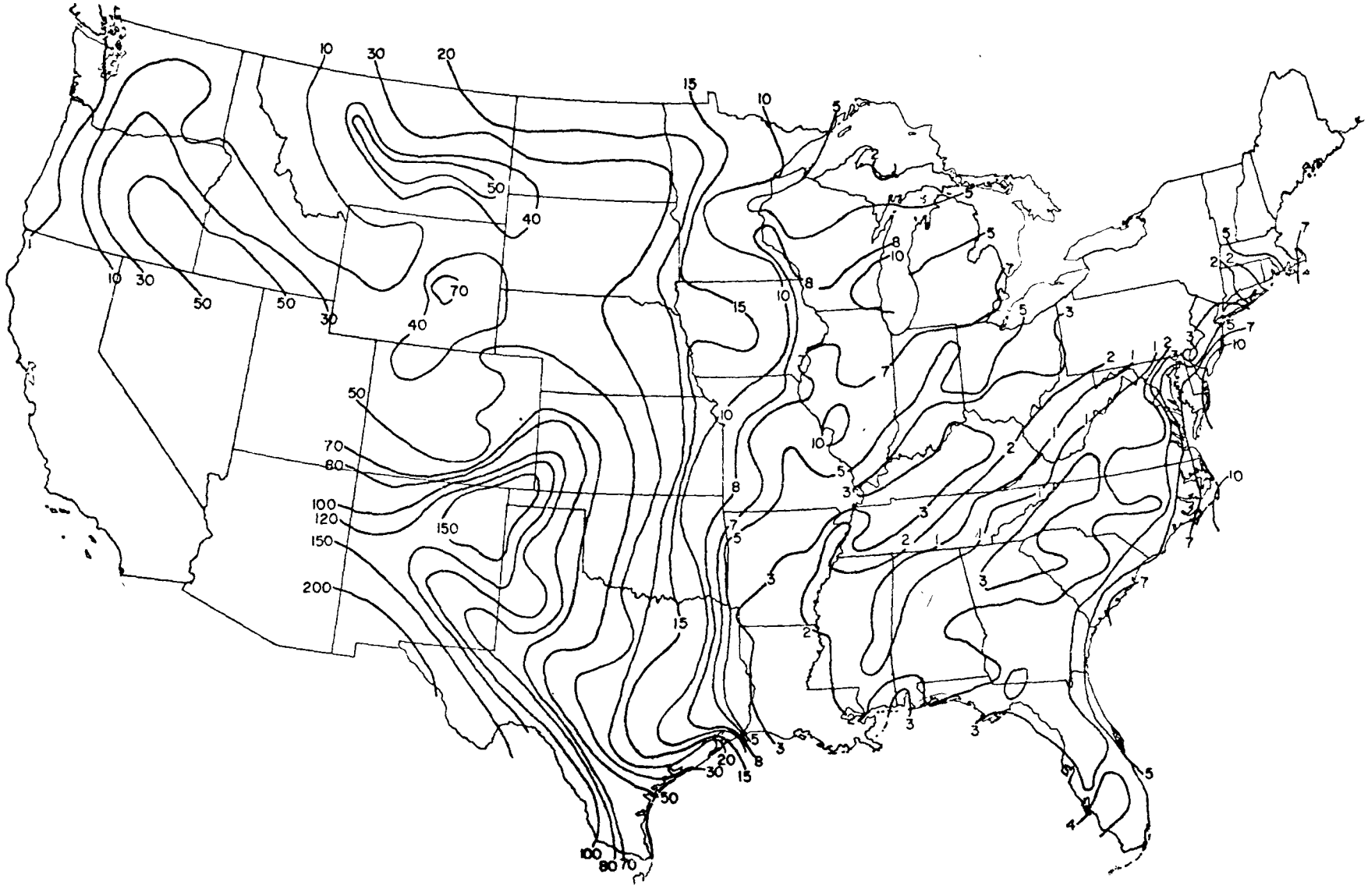

Figure 2-2. Climatic factor used in wind erosion equation.[2]

Under a separate contract to U.S. Environmental Protection Agency, emission estimates for dried copper tailings have been developed by PEDCo Environmental, Inc. with use of the U.S. Department of Agriculture's wind erosion equation.[2] These estimates are a function of regional climatic conditions and assume no surface crusting:

Climatic factor[a]	Emissions for dried copper tailings[b]	
	Mg/hectare/yr	tons/acre/yr
10	2.9	1.3
20	5.8	2.6
30	9.0	4.0
40	11.9	5.3
50	14.8	6.6
60	17.9	8.0
70	20.8	9.3
80	23.7	10.6
90	26.9	12.0
100	29.8	13.3
120	35.8	16.0

[a] See Figure 2-2 for the climatic factors for all parts of the country.

[b] Reliability rating of E.

For disposal of material such as fly ash, an engineering estimate of the uncontrolled handling and windage losses may be 1 to 5 percent.

For most waste dumps, there are emissions when the material is dumped onto the pile but probably only minimal additional emissions from wind erosion due to a lack of small particles on the surface. An emission factor of 10 gm/Mg (0.02 lb/ton) has been used to estimate dust emissions from truck dumping of large material.[3]

2.1.5 Waste Disposal Sites

Description - Fugitive dust can occur anywhere dusty waste material is dumped for disposal. This includes overburden piles, mining spoils, tailings, fly ash, bottom ash, catch from air pollution control equipment, process overload discharges, building demolition wastes, contaminated product, etc. Like open storage, emissions come from dumping and from wind erosion across unprotected surfaces. Since waste piles are generally not disturbed after dumping, there are no emissions from an activity comparable to loading out of the storage pile. However, there may be emissions from transporting the waste material on-site (if it is dry when it is produced) or from a reclamation process such as landfill covering associated with the waste disposal operation. If the surface of the waste material does not include a compound that provides cementation upon weathering or if the surface is not compacted or if an area of very little rainfall, wind erosion of fines can occur with winds greater than about 21 km per hour (13 mph).

Emission Rates - Equipment activity which occurs at the disposal site, such as construction or covering of landfilled material, can generally be categorized as heavy earthwork construction. It may be appropriate to apply the emission factor for heavy construction from EPA's Compilation of Air Pollutant Emission Factors (Supplement 5) -- 2.7 Mg/hectare (1.2 tons per acre) of active construction per month.[1] This value should be adjusted with the same climatic correction factor used for storage piles: $(100/PE)^2$. Note that waste disposal site emissions are likely to vary with different types of materials. No information is available, however, to quantify these differences.

8. Fugitive Emissions Control Technology for Integrated Iron and Steel Plants. Draft. Midwest Research Institute. Prepared for the U.S. Environmental Protection Agency, Industrial Environmental Research Laboratory under Contract No. 68-02-2120. Research Triangle Park, North Carolina. January 17, 1977.

9. Personal Communication from Mr. Ron Pair, Midwest Division, Ron Pair Enterprises, Inc. St. Clair Shores, Michigan to John Zoller, PEDCo Environmental, Cincinnati, Ohio. October 26, 1976.

10. Process Assumptions and Cost Bases for Flue Gas Desulfurization System Costs. PEDCo-Environmental Specialists, Inc., Cincinnati, Ohio. Unpublished data. November 1976.

11. Building Construction Cost Data 1976, 34th Annual Edition. R.S. Means Company, Inc., Duxbury, Massachusetts. 1976.

12. Unpublished data obtained from manufacturers of chemical wetting agents. PEDCo-Environmental Specialists, Inc., Cincinnati, Ohio. October 1976.

13. Cole, Howard J. Foam Suppressants in the Control of Source and Fugitive Emissions. Deter Company, Inc., East Hanover, N.J. February 1976.

14. Seibel, Richard J. Dust Control at a Transfer Point Using Foam and Water Sprays. U.S. Bureau of Mines, Washington, D.C. Technical Progress Report 97. May 1976.

REFERENCES FOR SECTION 2.1.4

1. Cowherd, C., K. Axetell, C.M., Guenther, and G.A. Jutze. Development of Emission Factors for Fugitive Dust Sources. Midwest Research Institute, Kansas City, Missouri. Prepared under Contract No. 68-02-0619. June 1974.

2. Nevada Particulate Control Study for Air Quality Maintenance Areas. Task B Report, Factors Influencing Emissions from Fugitive Sources. PEDCo-Environmental Specialists, Inc., Cincinnati, Ohio. Prepared under Contract No. 68-02-1375, Task Order No. 29. 1976.

3. Open Dust Sources Around Iron and Steel Plants, Draft. Midwest Research Institute. Prepared for the U.S. Environmental Protection Agency, Industrial Environmental Research Laboratory under Contract No. 68-02-2120. Research Triangle Park, North Carolina. November 2, 1976.

4. Compilation of Air Pollutant Emission Factors. U.S. Environmental Protection Agency, Office of Air Quality Planning and Standards. Research Triangle Park, North Carolina. February 1976.

5. Cross, F.L. Jr. and G.D. Forehand, Air Pollution Emissions from Bulk Loading Facilities, Volume 6, Environmental Nomograph Series. Technomic Publishing Co., Inc., Westport, Connecticut, 1975. pp. 3-4.

6. Jutze, G. and K. Axetell. Investigation of Fugitive Dust, Volume I--Sources, Emissions, and Control. PEDCo-Environmental Specialists, Inc., Cincinnati, Ohio. Prepared for U.S. Environmental Protection Agency. Contract No. 68-02-0044, Task Order No. 9. June 1974.

7. Evans, Robert J. Methods and Costs of Dust Control in Stone Crushing Operations. U.S. Bureau of Mines, Pittsburgh, Pa. Information Circular 8669. 1975.

piles with high material flow rates may require closer control of operations because of the possibility of jamming. Traveling or adjustable booms can handle high flow rates, but have greater operating costs.

Wetting agents or foam which are sprayed onto the material during processing or at transfer points retain their effectiveness in subsequent storage operations. Wetting agents retain surface moisture for extended periods, thereby preventing dusting. Spraying of the material prior to storage may not be possible in cases where product contamination could result (e.g. Portland cement clinker) or where the material is water soluble. However, such materials are generally not placed in open storage anyway. Steam has also been found to be an effective dust suppressant for some short-term storage operations. No test data are available, but by visual appearance, steam-treated trona (soda ash) piles are as dust-free as those sprayed with wetting agents or foam.

The capital costs of enclosed storage vary from $107 to $255 per cubic meter of capacity ($3.04 to $7.22 per ft^3), depending on the handling and storage requirements of the specific material.[10,11] The chemical and application costs for wetting agents range from $0.01 to $0.05 per Mg, while the comparable costs for foam are $0.022 to $0.11 per Mg ($0.020 to 0.10/ton).[7,12,13,14*] It should be noted that the application rates used in the cost estimates would be sufficient to control transfer and conveying emissions as well as storage emissions.

---

* Mention of company or product names is not to be considered as an endorsement by the U.S. Environmental Protection Agency.

Emission points	Control procedures	Efficiency, percent
Loadout[c]	Water spraying	50
	Gravity feed onto conveyor	80
	Stacker/reclaimer	25-50

[a] Reference 5.

[b] References 6 and 7.

[c] Reference 8.

Enclosing materials in storage is generally the most effective means of reducing emissions from this source category because it allows the emissions to be captured. However, storage bins or silos may be very expensive. Storage buildings must be designed to withstand wind and snow loads and to meet requirements for interior working conditions. One alternative to enclosure of all material is to screen the material prior to storage, sending the oversize material to open storage and the fines to silos.

Wind screens, or partial enclosure of storage piles, can reduce wind erosion losses but do not permit capture of the remaining storage pile fugitive emissions. Earthen berms, vegetation, or existing structures can serve as wind screens.

Telescoping chutes, flexible chute extensions, and traveling booms are used to minimize the free fall of material onto the pile and resulting emissions. Similarly, emissions due to loadout can be reduced by reclaiming the material from the bottom of the pile with a mechanical plow or hopper system. Telescopic chutes with aspiration to collection devices range in price from $26,000 to $42,000 for a system handling 90 Mg (100 ton) per minute.[9*] The use of telescoping chutes and flexible chute extensions for

* Mention of company or product names is not to be considered as an endorsement by the U.S. Environmental Protection Agency.