United States
Environmental Protection
Agency

Office of Air Quality
Planning and Standards
Research Triangle Park NC 27711

EPA-450/3-82-009
September 1982

Air

EPA

Guideline Series

Control of Volatile Organic Compound Emissions from Large Petroleum Dry Cleaners

EPA-450/3-82-009

Control of Volatile Organic Compound Emissions from Large Petroleum Dry Cleaners

Emission Standards and Engineering Division

U.S. Environmental Protection Agency
Region 5, Library
77 West Jackson
Chicago, IL 60604

U S. ENVIRONMENTAL PROTECTION AGENCY
Office of Air, Noise, and Radiation
Office of Air Quality Planning and Standards
Research Triangle Park, North Carolina 27711

September 1982

OAQPS GUIDELINE SERIES

The guideline series of reports is being issued by the Office of Air Quality Planning and Standards (OAQPS) to provide information to state and local air pollution control agencies; for example, to provide guidance on the acquisition and processing of air quality data and on the planning and analysis requisite for the maintenance of air quality. Reports published in this series will be available - as supplies permit - from the Library Services Office (MD35), U.S. Environmental Protection Agency, Research Triangle Park, North Carolina 27711; or, for a nominal fee, from the National Technical Information Service, 5285 Port Royal Road, Springfield, Virginia 22161.

TABLE OF CONTENTS

Section		Page
1.	INTRODUCTION	1-1
2.	PETROLEUM DRY CLEANING INDUSTRY	2-1
	2.1 Industry Description	2-1
	2.2 Process Description	2-2
	2.3 Emission Sources	2-6
	2.4 Facilities and Their Emissions	2-13
	2.5 Model Plants	2-14
	2.6 References for Chapter 2	2-16
3.	EMISSION CONTROL TECHNIQUES	3-1
	3.1 Recovery Dryer	3-1
	3.2 Recovery Dryer Safety	3-11
	3.3 Cartridge Filtration	3-15
	3.4 Vacuum Distillation	3-21
	3.5 Miscellaneous Fugitive Emission Sources	3-23
	3.6 Combined Control Techniques	3-24
	3.7 Evaluation of Control Technology Transfer	3-25
	3.8 References for Chapter 3	3-27
4.	ENVIRONMENTAL ANALYSIS OF RACT	4-1
	4.1 Air Pollution	4-1
	4.2 Water Pollution	4-3
	4.3 Solid Waste Disposal	4-5
	4.4 Energy	4-5
	4.5 References for Chapter 4	4-7
5.	CONTROL COST ANALYSIS OF RACT	5-1
	5.1 Basis for Capital Costs	5-1
	5.2 Basis for Annualized Costs	5-3
	5.3 Emission Control Costs	5-6
	5.4 Cost Effectiveness	5-9
	5.5 References for Chapter 5	5-13
	APPENDIX A – Summary of Field Tests	A-1
	APPENDIX B – Emission Measurement Procedures	B-1

TABLE OF CONTENTS (continued)

Section	Page
APPENDIX C – Emissions Factors	C-1
APPENDIX D – Comments Received on the November 1981, Draft CTG	D-1
APPENDIX E – Example Regulation	E-1

LIST OF FIGURES

Figure		Page
2-1	Petroleum Dry Cleaning Plant Flow Diagram	2-3
2-2	Typical Dry Cleaning Equipment in Existing Plants	2-4
3-1	Solvent Vapor Flow Diagram for a Recovery Dryer	3-2
3-2	Operating Cycles of the Existing Recovery Dryer	3-4
3-3	Solvent Recovery and Concentration Curve for the Recovery Dryer	3-9
3-4	Cartridge Filtration System Schematic	3-16
3-5	Solvent Emissions for Filter Cartridges as a Function of Drainage Time.	3-20
A-1	Recovery and Concentration Curves for a High-Emission Recovery Dryer Load	A-8
A-2	Recovery and Concentration Curves for a Low-Emission Recovery Dryer Load	A-9
A-3	Recovery and Concentration Curves for a Recovery Dryer with Test-Average Emissions	A-10
A-4	Recovery and Concentration Curves for a Low-Emission Recovery Dryer Load	A-15
A-5	Recovery and Concentration Curves for a High-Emission Recovery Dryer Load	A-16
A-6	Recovery and Concentration Curves for a Recovery Dryer Load with Emissions Approximately Equal to the Overall Test Average.	A-17
A-7	Solvent Emissions for Filter Cartridges as a Function of Drainage Time.	A-21
A-8	Carbon Adsorption System Schematic.	A-27
B-1	Response Factor Preparation System.	B-8

LIST OF TABLES

Table		Page
2-1	Dry Cleaning Solvent Physical Properties	2-7
2-2	Model Plant Parameters (Existing Equipment).	2-15
3-1	Model Plant Parameters (Control Equipment)	3-26
4-1	Nominal Emissions Factors for Existing and RACT Equipment.	4-2
4-2	Nominal Annual VOC Emissions for Two Model Plants Employing Existing and RACT Equipment and Procedures . .	4-4
4-3	Energy Impact of Existing and RACT Equipment	4-6
5-1	Equipment Costs in Two Model Plants.	5-2
5-2	Cost Equations	5-4
5-3	Capital and Annualized Costs of Existing Equipment in Two Model Plants	5-7
5-4	Capital and Annualized Costs of RACT Equipment in Two Model Plants	5-8
5-5	Cost Effectiveness of Existing and RACT Equipment in Two Model Plants	5-11
5-6	Cost Effectiveness of RACT Implementation in Two Model Plants	5-12
A-1	Dryer Emissions Data	A-3
A-2	Recovery Dryer Data Compilation	A-6
A-3	Recovery Dryer Data Compilation	A-14
A-4	Total Solvent Emissions Due to Disposal of 14 Filter Cartridges (12 Carbon-Core and 2 All-Carbon) as a Function of Drainage Time.	A-22
A-5	Record of Still Waste Boildown Samples	A-25

LIST OF TABLES (continued)

Table		Page
B-1	Equations for Calculating Solvent-to-Propane Response Factor	B-11
C-1	Nominal Annual VOC Emissions for Two Model Plants Employing Existing and RACT Equipment and Procedures . .	C-2

1. INTRODUCTION

The Clean Air Act Amendments of 1977 require each State in which there are areas in which the national ambient air quality standards (NAAQS) are exceeded to adopt and submit revised State Implementation Plans (SIP's) to EPA. Revised SIP's were required to be submitted to EPA by January 1, 1979. States that were unable to demonstrate attainment with the NAAQS for ozone by the statutory deadline of December 31, 1982, could request extensions for attainment of the standard. States granted such an extension are required to submit a further revised SIP by July 1, 1982.

Sections 172(a)(2) and (b)(3) of the Clean Air Act require that nonattainment area SIP's include reasonably available control technology (RACT) requirements for stationary sources. As explained in the "General Preamble for Proposed Rulemaking on Approval of State Implementation Plan Revisions for Nonattainment Areas," (44 FR 20372, April 4, 1979) for ozone SIP's, EPA permitted States to defer the adoption of RACT regulations on a category of stationary sources of volatile organic compounds (VOC) until after EPA published a control techniques guideline (CTG) for that VOC source category. See also 44 FR 53761 (September 17, 1979). This delay allowed the States to make more technically sound decisions regarding the application of RACT.

Although CTG documents review existing information and data concerning the technology and cost of various control techniques to reduce emissions, they are, of necessity, general in nature and do not fully account for variations within a stationary source category. Consequently, the purpose of CTG documents is to provide State and local air pollution control agencies with an initial information base for proceeding with their own assessment of RACT for specific stationary sources.

2. PETROLEUM DRY CLEANING INDUSTRY

The objective of this section is to describe the domestic petroleum dry cleaning industry. The dry cleaning process is discussed as are solvent characteristics, emissions, and the major petroleum dry cleaning equipment. Model plants are presented that will be used in later chapters to evaluate the environmental and cost impacts of reasonably available control technology (RACT).

2.1 INDUSTRY DESCRIPTION

The dry cleaning industry is a service industry involved in the cleaning and/or renting of articles ranging from personal clothing to mops and mats. The total industry is subdivided according to the type of solvent used and the type of services offered. The solvents used are categorized into three broad groups: petroleum solvents, perchloroethylene (perc), and trichlorotrifluoroethane (F-113, a registered trademark). The industry also is composed of three sectors which are delineated by the type of services offered. These are: (1) the self-service or coin-operated sector, (2) the commercial dry cleaning sector, and (3) the industrial dry cleaning sector. This report is concerned only with large facilities that use petroleum dry cleaning solvents.

Petroleum dry cleaning represents about 30 percent of the total quantity of articles cleaned by the dry cleaning industry. Petroleum dry cleaning services are offered only by the commercial and industrial sectors of the industry, and represent about 70 and 30 percent, respectively, of the total clothes throughput for the industry (Fisher, 1980b; Sluizer, 1981). Coin-operated or self-service petroleum dry cleaning plants are prohibited by National Fire Protection Association codes due to the highly volatile and flammable nature of petroleum solvents (NFPA, 1979). Consequently, most commercial and industrial

petroleum dry cleaning plants are located away from densely populated residential areas and shopping centers.

Industrial dry cleaning establishments are generally larger than commercial plants and cater to industrial, professional, and institutional customers. Articles such as work uniforms, mats, mops, and rugs generally are cleaned by industrial dry cleaners, often in conjunction with rental operations. There are approximately 1,000 industrial establishments nationwide. In 1979, approximately 230 of these industrial plants used petroleum dry cleaning solvents in some portion of their cleaning operations. A typical industrial petroleum dry cleaning plant processes roughly 515 megagrams of articles each year (Sluizer, 1981). Thus, the industrial petroleum dry cleaning sector processes approximately 120,000 megagrams of articles each year.

2.2 PROCESS DESCRIPTION

Petroleum dry cleaning operations are similar to detergent and water wash operations. Unlike perchloroethylene dry cleaning, which can have both washing and drying operations in the same machine (dry-to-dry), petroleum dry cleaning is a batch operation where articles are washed and dried in separate machines. Figure 2-1 depicts a typical petroleum dry cleaning operation. Articles to be dry cleaned are sorted into lots according to color, fabric, degree of soiling, etc., and are placed in their appropriate washers. For example, one lot might consist of light colored, light weave, casual clothing which can be placed in one washer, while another lot might be made up of heavy weave, heavily soiled industrial uniforms placed in another washer. Articles are then agitated in the solvent. The more heavily soiled articles go through two or more wash cycles: the first with recycled, soiled solvent and the second with clean solvent.

Large dry cleaners often use a cleaning process where water-soluble materials are removed from articles in a water and detergent wash. This process, sometimes called a "dual" or "double phase" process (see Figure 2-2b), is characteristic of many of the modern petroleum solvent washer/extractors (particularly those with large capacities) and is employed to some extent in most large petroleum dry cleaners (Sluizer, 1981).

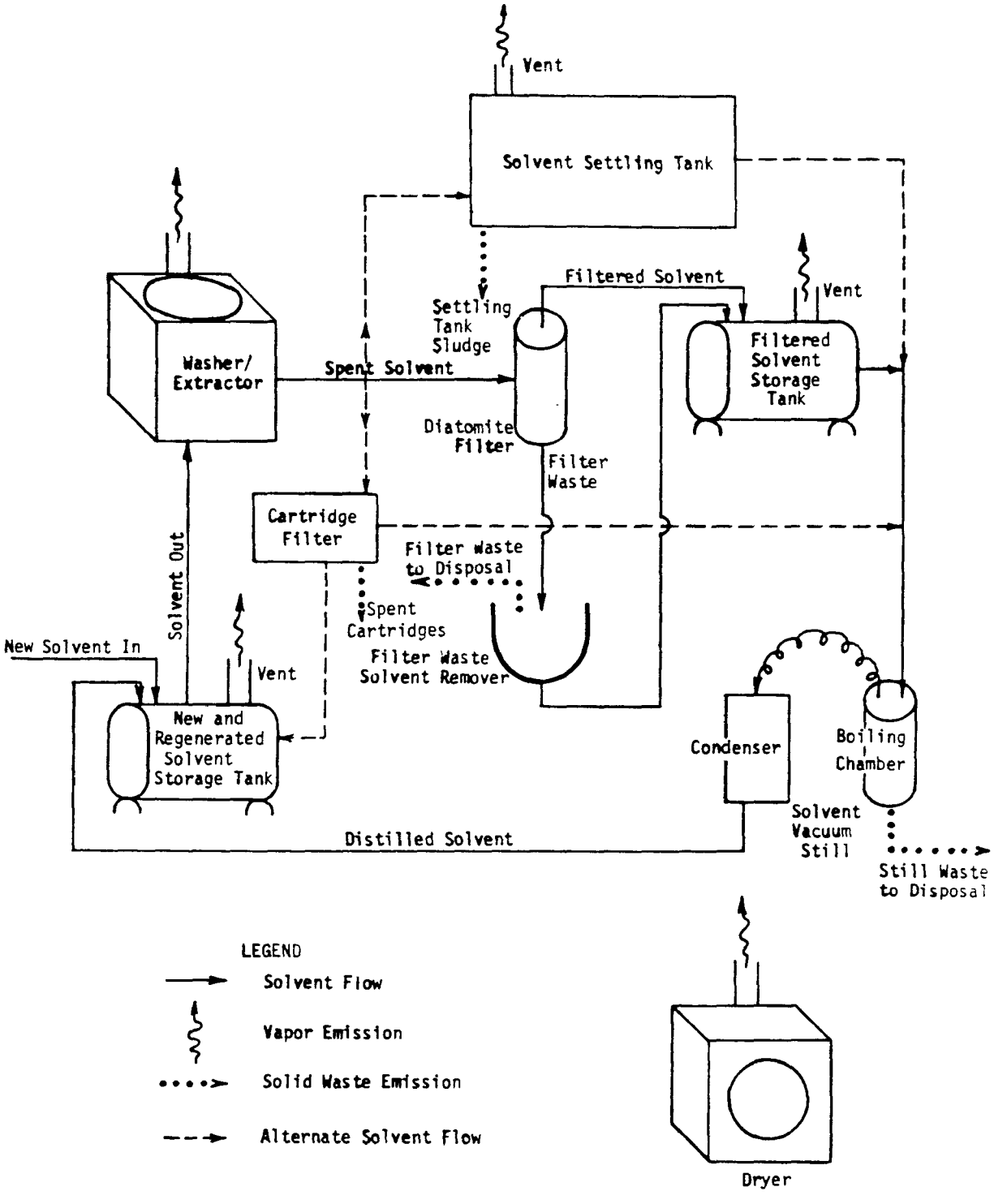

Figure 2-1. Petroleum Dry Cleaning Plant Flow Diagram.

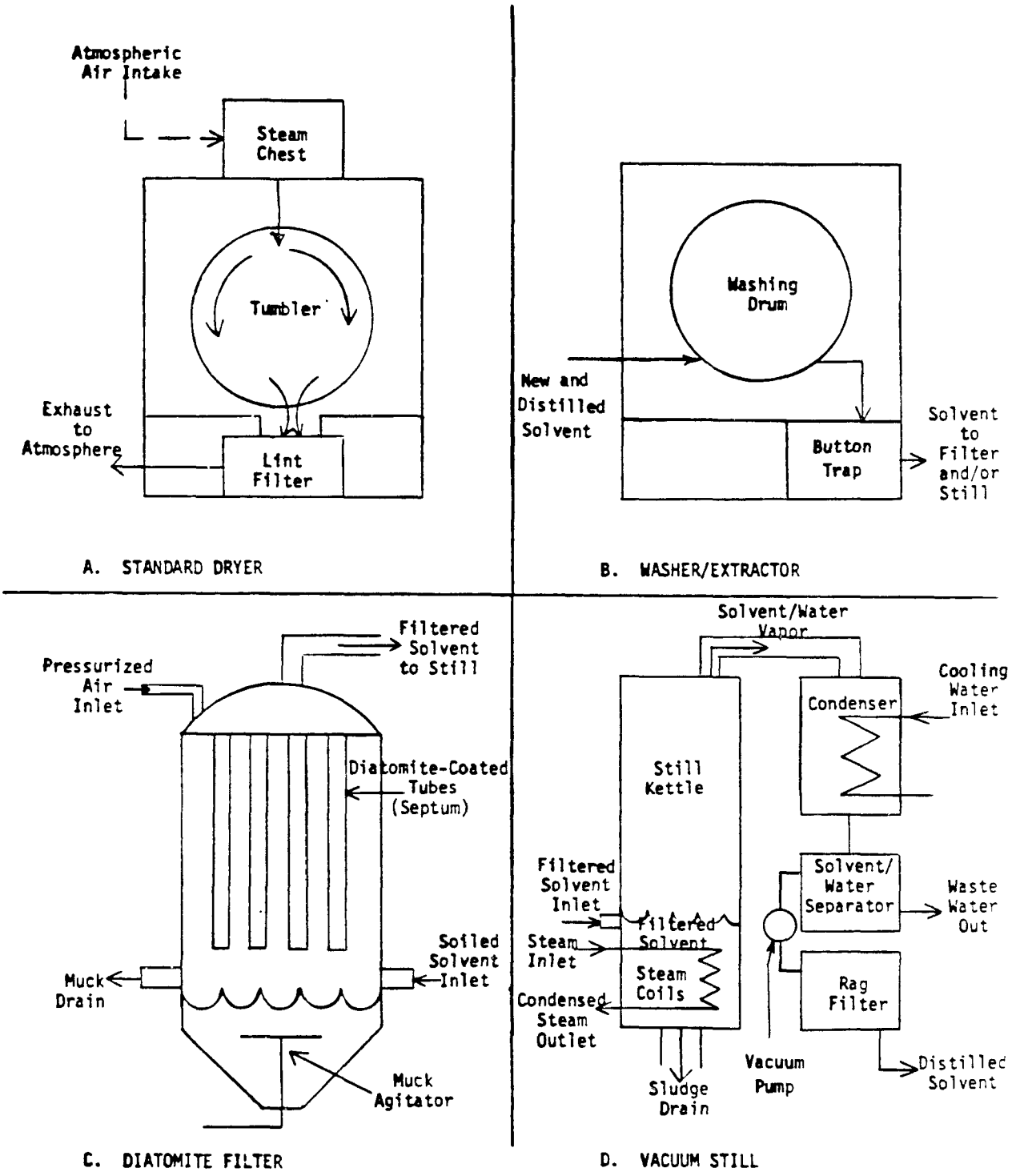

Figure 2-2. Typical Dry Cleaning Equipment in Existing Plants.

After completion of the wash cycle, articles are spun at high speeds to remove excess solvent. This spin cycle usually occurs in the same equipment used for washing; however, some existing plants (older petroleum plants) have separate, high speed centrifugal extractors which remove and recover solvent from washed articles (Watts and Fisher, 1975). When the spin cycle has terminated, articles are transferred from the washer/extractor to a dryer (tumbler). Inside the dryer, remaining solvent is removed from the articles by evaporation in a heated air stream and vented to the atmosphere.

In some smaller plants, soiled solvent extracted during the spin cycle is passed through a filter to remove insoluble soils and other suspended particles. When the soil load in the solvent is excessive, as in most larger plants, soil-laden solvent is transferred directly from the washer to a vacuum still or to a settling tank prior to distillation. After settling (usually overnight), the heavy oils, dirt, and grease are decanted and the solvent is sent to a vacuum still where it is purified. The distilled solvent is pumped into another holding tank or is returned to the washer/extractor. When oil and grease loading is low, or when cartridge filtration is used, distillation is often bypassed and filtration serves as the only means of solvent replenishment.

2.2.1 Petroleum Dry Cleaning Solvents

The National Fire Protection Association (NFPA) classifies petroleum dry cleaning plants by the type of solvent used. Solvents, in turn, are classified by their flash points. Class II and IIIA solvents are the primary solvents used in the petroleum dry cleaning industry. The NFPA number 32-1979 dry cleaning solvent classification is as follows (NFPA, 1979):

- Class I Solvents - Liquids having flash points below 38°C (100°F) such as 50°F flash point naphtha.
- Class II Solvents - Liquids having flash points from 38°C to 59°C (100°F to 139°F) such as quick drying solvents.
- Class IIIA Solvents - Liquids having flash points ranging from 60°C to 93°C (140°F to 199°F) such as 140°F "safety" solvent.

Petroleum solvents are a mixture of mainly C_8 to C_{12} hydrocarbons that are similar to kerosene. These hydrocarbons can be further subdivided

into three molecular structures: aliphatics, alicyclics, and aromatics. Table 2-1 gives the chemical properties of several types of petroleum solvents including their aromatic contents. In recent years, the aromatics content of petroleum solvents has been reduced to about 2 percent in many states in order to control these atmospheric emissions. This reduction has somewhat reduced the cleaning efficiency of the solvent, according to an industry trade association because the aromatics content has a direct influence on the cleaning rate and performance (Sluizer, 1981).

2.3 EMISSION SOURCES

This section identifies dryers, solvent filtration and distillation systems, and miscellaneous (fugitive) sources as the major contributors of VOC emissions in a dry cleaning plant. The operations of these sources, their emissions, and the development of a baseline emission estimate are discussed below.

2.3.1 Dryers

Petroleum dryers consist of three parts that are housed in a single unit: the tumbler, blower, and steam coils (see Figure 2-2a). The tumbler is a perforated, rotating basket in which solvent-laden articles are placed. The blower forces air over steam-heated coils, where it reaches temperatures that range from 43°C to 88°C (110°F to 190°F), and then into the tumbler. Optimum drying temperatures range from 60°C to 66°C (140°F to 150°F) (Marvel et al., 1980). Solvent in the articles is removed or volatilized by the heated air stream. The volatilized solvent and heated air then are continuously vented to the atmosphere during the drying cycle at an air flow rate of from 28 to 340 cubic meters per minute (1,000 to 12,000 cubic feet per minute) and a vapor concentration of from 200 to 9,000 parts per million (ppm) of solvent by volume (Jernigan and Lutz, 1979; Lutz et al., 1980; Marvel et al., 1980).

Existing petroleum dry cleaning dryers range in capacity from 22 kg to 180 kg (50 to 400 lb) (Marvel et al., 1980). Emissions from these dryers vary depending on the extraction efficiency of the washer/extractor and the weight of articles per dryer load. The type of articles in the dryer also have an effect on emission rates and emission concentration

Table 2-1. Dry Cleaning Solvent Physical Properties[a]

Trade Name	Producer	Boiling Range, °F			Flash Point °F T.C.C.	Vapor Pressure mm Hg at 20°F	L.E.L.	Ave. Mol. wt.	Pounds per Gallon at 60°F	Aniline Point °F	Kauri Butanol Value	Composition, Vol. %				
		Initial	50%	Dry Point								Paraffins	Naphthenes	Aromatics C_8+	Aromatics Total	Olefins
Skellysolve S-66	Getty	305	329	385	104	3.2	1.1	142	6.48	142	36	43.4	49.4	6.8	6.8	0.4
Varsol 3	Exxon	310	327	348	105	10.0			6.46	130	38			19.0	19.0	
325	Chevron	320	335	368	105	5.0	1.0	138	6.57	145.2	36	35.4	62.2			
AMSCO Napthol MS*	Union	313	323	353	106	3.0	1.0	138	6.32	160	31	64	35		1	
Varsol 1	Exxon	313	346	390	106	10			6.56	130	37			18	18	
Skellysolve "S-2"	Getty	314	321	331	102	3.1	1.1		6.47	133	37	39.5	48.2	11.7	11.7	0.6
Kwik-Dri**	Ashland	315	330	355	105	<10	1	128	6.46	154	32	57	41	2	2	0.3
Mineral Spirits	Ashland	315	344	385	105	<10	1	145	6.55	140	36	54	36	9.5	9.5	0.3
Mineral Spirits 66/3	Ashland	315	342	385	105	<10	1	145	6.55	155	31	57	41	2	2	0.2
Varsol 18	Exxon	315	344	395	110	10			6.42	150	32			7.6	7.8	
AMSCO Mineral Spirits 66/3	Union	315	345	375	104	1.1	.7		6.55	153	33	61	37	2.0	2.0	
Sol 340	Shell (EOR)	316	324	347	104	2.8	1.0		6.37	150	33	47.2	50.2	2.6	2.6	
Mineral Spirits 145-EC	Shell (EOR)	317	336	388	112	2.7	1.0		6.49	145	34	47.5	45.1	7.4	7.4	
AMSCO Odorless MS	Union	354	362	386	128	<1.0			6.33	184	27	86	14			
Odorless MS	Ashland	355	365	395	128	<10	1		6.33	185	28	87	13			
140 Solvent	Ashland	362	375	390	140	<10	1		6.54	160	31	60	37	3.0	3.0	0.3
Skellysolve "T"	Getty	363	375	400	143	0.7	1.1		6.57	151	32	35.3	54.5	9.3	9.3	0.9
AMSCO 140 Solvent 66/3	Union	368	383	402	146	<1.0	1.0		6.51	164	30	55	44	1.0	1.0	
Sol 140	Shell (EOR)	371	380	416	143	<1.0			6.56	153	31	54.9	39.2	5.9	5.9	
Chevron Thinner 410B	Chevron	370	383	406	142		0.9	157	6.78	147.4	35.8	36.6	60.6			

*Used during Rhode Island test.

**Used during Lakeland test.

[a]Source: Personal Communications and the "Raw Materials Index, Solvents," National Paint and Coating Association, Washington, D.C.; and Chevron Research Company

levels. Wools have a tendency to absorb more solvent and, consequently, give up more solvent during extraction than an equal weight of silks (IFI, 1973). This basic property may be attributed to the loose weave of wools in comparison with the tight weave of silks. Thus, loosely woven materials tend to absorb and give up solvent more readily than tightly woven material.

In an EPA demonstration test of an add-on carbon adsorber at a petroleum dry cleaning plant in Anaheim, California, a 180 kg (400 lb) standard dryer loaded with 115 kg (250 lbs) of work uniforms, shop towels, and fender covers emitted 14 kg VOC per 100 kg dry weight of articles cleaned (Lutz et al., 1980). Approximately 28 kg VOC per 100 kg dry weight of articles cleaned was emitted during an EPA test of a 50 kg (100 lb) standard dryer at a petroleum dry cleaning plant in Pico Rivera, California (Jernigan and Lutz, 1980). This dryer was loaded to 10 percent over-capacity with leather and cotton work gloves, exclusively. A study by a dry cleaning trade association indicated that standard petroleum solvent dryers emit approximately 14 kg VOC per 100 kg dry weight of general apparel cleaned (Fisher, 1975). The nominal emission rate from a standard dryer, based on these three data sources, is 18 kg VOC per 100 kg dry weight of articles cleaned. This average emission rate is heavily dependent on the washer extraction efficiency and the solvent absorptivity of the fabric dried and could vary significantly between individual dry cleaning plants.

2.3.2 Filters

Filtration, in dry cleaning operations, is a process used to remove most insoluble contaminants (dirt and lint), as well as certain water-soluble contaminants (perspiration and food stains) from dry cleaning solvents. This is accomplished by rapidly passing large volumes of solvent through a porous medium that traps and thus removes contaminants suspended in the solvent.

All dry cleaning filtration systems are composed of two parts: the filter medium and the structure that holds the filter medium, known as the septum (see Figure 2-2c). The filter medium, usually diatomaceous earth (diatomite) mixed with activated carbon, is used to remove insoluble contaminants by entrapping them in its porous surface. The septum is a

rigid, porous surface (screen, cloth, or wire mesh) to which the filter medium adheres, thereby allowing pressurized solvent to flow through while simultaneously blocking the passage of particles. Filters are sized by the volume of solvent processed and range in size from 5,700 to 56,800 liters per hour (1,500 to 15,000 gallons per hour) (Washex, 1974).

During a wash cycle, articles are agitated in a bath of solvent. After the wash cycle, the soiled solvent is pumped to a filter for filtration. Filters vary, based on their mode of operation, septum type, and construction material. Single-charge filters (rigid tube or disc septums) have a single mass or "charge" of filter medium which is replaced after each wash load is completed. With multi-charge filters (bag, screen, and rigid tube septums) filter medium is added to the initial charge for each load of articles washed. Regenerative filters (flexible tube septums) have an initial mass of filter medium which is redistributed on the septum for each load of articles washed, without subsequent addition of filter medium. As of 1980, about 50 percent of the petroleum dry cleaning plants that utilize filtration used multi-charge diatomite filters, the remaining 50 percent employed cartridge filters (see Section 3.3) for solvent filtration (Fisher, 1980a). A trade association study has shown that initial masses of diatomite (precoats) average about 1 kg (2 lbs) per 3,800 liters (1,000 gal) of filter capacity, with diatomite being added during the operation at a rate of 0.5 kg (1 lb) per 45 kg (100 lbs) of articles cleaned (Leonhardt, 1966).

Filter medium is replaced when the pressure across the filter, due to the buildup of contaminants on the medium, reaches a predetermined level (up to 40 psi or 270 kilopascals). Spent filter medium (filter muck) is usually allowed to drain in the filter housing overnight or for 24 hours before it is discarded. An industry trade association determined that discarded filter medium that has been allowed to drain for 24 hours may contain from 5 to 10 kg solvent per 100 kg dry weight of articles cleaned for regenerative and multi-charge filters, respectively (NID, 1971). Thus, after a 24-hours drain time, an average of just under 8 kg of solvent per 100 kg dry weight of articles cleaned is retained in the discarded filter muck. This average can vary based on the soil loading

and filter muck drainage procedure employed in individual plants. Also, devices such as centrifugal separators, and pressure vacuum muck strippers have been used by a few large petroleum dry cleaning plants to recover solvent from diatomite filter muck (Fisher, 1981). However, these devices are not widely distributed through the industry and there is little current data on their performance as an emisson control technique.

2.3.3 Settling Tanks

Large industral facilities with heavy soil loadings and high throughputs typically omit filtration, relying instead on settling tanks to partially remove solids and nonsolvent soluble contaminants from the soiled solvent stream. In these tanks, heavier components of the used solvent from the washer are allowed to settle to the bottom of the tank while relatively contaminant-free solvent is pumped from the top of the tank to the vacuum still. Periodically, depending on the tank capacity and the plant throughput, the heavier components are pumped from the bottom of the tank.

There is no test data available on the solvent retention of settling tank waste. A vacuum still manufacturer stated, however, that approximately 2 kg of solvent is lost with every kilogram of settling tank waste (Landon, 1981). An industrial trade association representative stated that the solvent content of settling tank waste can range from 80 to 200 percent by weight of the total waste (Sluizer, 1981).

The operation of a settling tank is dependent upon the mode of operation of the plant, the plant's capacity for storing the residue and the plant's settling tank and vacuum still capacities. Most dry cleaners use at least one of three approaches to remove their settling tank residue; burn it as a boiler fuel supplement, discard it with general dry cleaning waste or sell it to a solvent reprocessor. Trade association and industry representatives were unable to give any percentages of dry cleaners that use any of these three approaches, but one representative stated that the residue is usually too contaminated or viscous to distill in a dry cleaning vacuum still (Sluizer, 1981; Landon, 1981).

2.3.4 Vacuum Stills

Distillation of solvent is used to remove contaminants, such as bacteria, detergents, water, oils, and dyes, that are not removed by

filtration or settling. Petroleum dry cleaning solvents have boiling ranges of from 150°C to 215°C (300 to 415°F). A steam pressure of 670 kilopascals (100 psi) or more is required to boil petroleum solvents under atmospheric conditions. Consequently, distillation of petroleum solvents is done under a vacuum of from 75 to 92 kPa (22 to 27 inches Hg). This lowers the boiling range for petroleum solvents to 107°C to 113°C (225°F-235°F) and reduces required steam pressures to the range of 235 to 600 kilopascals (35 to 90 psi) (Washex, 1973). Vacuum stills are sized by the volume of solvent to be processed and range in size from 190 to 5,700 liters per hour (50 to 1,500 gallons per hour) (Washex, 1973).

Spent solvent from a washer or filter is pumped to the boiling chamber of a still on a continuous basis. In the boiling chamber, steam heated coils volatilize the solvent, leaving behind still residue (high boilers) composed of oils, grease, and dirt. Solvent vapor and moisture pass continuously from the boiling chamber into a water-cooled condenser where the vapors condense to a mixture of liquid solvent and water (see Figure 2-2d). This mixture is constantly piped to a gravimetric separator, where the solvent and water are separated by the differences in their densities. Finally, the solvent is pumped to a tank containing cotton rags or salt pellets which absorb any remaining water.

When the concentration of high boilers has reached a specified level, as indicated by a visual inspection of solvent flow in a sight glass between the condenser and separator (indicating that the evolution and condensation of solvent vapors is seriously impeded or halted), the solvent flow to the still is manually shut off and steam flow is increased to the maximum available level. The liquid contained in the boiling chamber is allowed to boil for 5 to 15 minutes in a process commonly called "boildown" in which most of the remaining solvent is removed by boiling. After boildown, the liquid residue is drained from the boiling chamber and continuous still operations are resumed. Typically, still boildown is required when the solvent and water flow from the condenser are reduced by 75 percent (Washex, 1973; Rosenthal, 1980). This flow reduction is subjectively determined based on the operation of a particular still.

Depending on the design of the still, its operation, and frequency of boildown, as much as 90 percent by weight of solvent is decanted with still residue (equivalent to 7 kg solvent per 100 kg dry weight of articles cleaned) as indicated by an EPA vacuum still test of an industrial dry cleaning plant in Anaheim, California (Jernigan and Kezerle, 1980). The still tested at this facility, however, was designed in a manner that severely limited the removal of solvent from the waste during boildown, and the frequency of boildown was based on a daily routine rather than on the flow rate of distilled solvent. A vacuum still test, conducted by a firm that rents and dry cleans apparel, also indicated that more than 80 percent by volume of solvent is decanted with their still residue (Burnett, 1980). A trade association study has found that approximately 1 kg of solvent per 100 kg dry weight of articles cleaned is decanted with the residue for a well-maintained and operated vacuum still (NID, 1971). An industry trade association analysis of still wastes from 43 separate commercial petroleum dry cleaning plants revealed that well operated plants can reduce the solvent content of still residue to 31 to 38 percent solvent by weight. (Three of these samples had solvent contents that were below 31 percent solvent by weight.) Although the trade association was unable to give the number of samples that achieved the various levels of solvent retention, the average range of solvent retention for all the samples was 39 to 42 percent solvent by weight. Samples with a solvent retention range of 43 to 51 percent were considered moderately high in solvent content by the trade association, and samples with solvent contents that exceeded 51 percent were considered extremely high, indicating a poorly operated still (Andrasik, 1981). Thus, considering variations in operating procedures (boildowns) and still design, the assumed solvent content of disposed still waste would be between 1 and 7 kg solvent per 100 kg dry weight of articles dry cleaned, with a value of 3 kg solvent per 100 kg articles representing the solvent content of the disposed waste from a typical still.

2.3.5 Fugitive Emission Sources

There are a number of sources of fugitive emissions in a dry cleaning operation. Fugitive sources include emissions from the extraction cycle of a washer, emissions given off during the transfer of solvent-laden

articles from washers or dryers, liquid and vapor leaks in tanks and piping, and the evaporation of solvent from open containers. Also included are fugitive emissions from filter muck and still residue storage tanks. Although sources of fugitive emissions can be identified and the VOC concentrations within the vicinity of these sources can be quantified, there is no discrete flowrate associated with these sources and, therefore, it is virtually impossible to estimate an emissions rate for fugitive sources.

An attempt was made to quantify fugitive emissions in an EPA test at a dry cleaning plant in Anaheim, California. It was found that more than 0.8 kg VOC per 100 kg dry weight of articles cleaned was emitted from the roof exhaust vent which collected emissions from various fugitive sources within the plant (Jernigan and Kezerle, 1980). Emissions were expected to be higher than those recorded because the doorways and windows (pathways through which emissions escaped to the atmosphere) remained open during fugitive testing.

It is technically and economically infeasible to quantify all sources of emissions in a dry cleaning plant because certain emissions are prevalent only during the operation of the dry cleaning equipment, while other low-level sources emit continuously. A dry cleaning industry trade association publication assumes, however, that miscellaneous (fugitive) emissions would be approximately 1 kg of VOC emissions per 100 kg dry weight of articles cleaned (Fisher, 1975).

2.4 FACILITIES AND THEIR EMISSIONS

A summation of typical emissions from the four major sources in a petroleum dry cleaning plant yields a range of from 15.5 kg to 46 kg VOC per 100 kg dry weight of articles cleaned, depending on the plant throughput and the equipment configuration. Of the 15.5 to 46 kg of total plant emissions, 60 to 90 percent originates at the dryer, 22 percent is emitted from filter muck (4 percent from disposed cartridge filters), still residue contributes 7 to 15 percent, and 3 to 6 percent is attributable to fugitive emissions. Using 15.5 to 46 kg VOC per 100 kg of clothes cleaned as a baseline emission range, a representative petroleum plant might have a breakdown of emissions similar to the values shown below:

Source	Range of emission rates (kg VOC per 100 kg dry weight of articles cleaned)	Nominal emission rates (kg VOC per 100 kg dry weight of articles cleaned)
Dryer	14-28	18
Filter		
Diatomite	(5-10)	8
Cartridge	(0.5-1)	1
Still	(1-7)	3
Fugitive sources	(0.5-1)	1
Total	(15.5-46)	
Totals with		
Diatomite filter		30
Cartridge filter		23
Settling tanks		22

2.5 MODEL PLANTS

Two model plants – Model plant I and model plant II – have been developed to represent the large petroleum dry cleaning industry. Throughputs of existing plants vary widely in both magnitude and content, and the models do not represent a clear distinction as to actual plant sizes or equipment configurations. Rather, these models were developed to simplify the classification of existing dry cleaning plants and their equipment, throughputs, and costs. The data used in the development of these model plants were derived from plant visits, dry cleaning trade association survey data, and input from industry representatives (Fisher, 1975; Marvel et al., 1980; Sluizer, 1981).

The model dry cleaning plants are classified by their throughputs, which are reflected in the type and size of equipment present. Larger dry cleaners usually have larger throughputs; but in both model plants, revenues are based primarily on rental items which are cleaned regularly as part of the rental process. Table 2-2 lists the characteristics of each model plant, their throughput, and emissions. The plant and nationwide emissions listed are based on nominal emission rates, and may not be representative of all plants with a given annual throughput.

2.5.1 Model Plant I

Model plant I represents dry cleaners having a daily throughput of 1,100 kg (2,400 lb) of soiled articles ranging from rental uniforms to mops, rugs and mats. Typically, a single, large washer and several

Table 2-2. MODEL PLANT PARAMETERS
(Existing Equipment)

Model plant	Model Plant I	Model Plant II
Number of existing plants nationwide in 1979	60	170
Annual plant throughput, in kg (lbs)	182,000 (400,000)	635,000 (1,400,000)
Throughput description	industrial articles	industrial articles
Number of washers	1	2
Washer capacity (each), kg (lbs)	115 (250)	225 (500)
Number of standard dryers	3	2
Dryers capacity (each), kg (lbs)	45 (100)	180 (400)
Number of diatomite filters	2	0
Diatomite filter capacity (each), L/hr (gal/hr)	11,400 (3,000)	- -
Total vacuum still capacity L/hr (gal/hr)	1,900 (500)	5,700 (1,500)
Number of loads dried per day	20	14
Average load weight per dryer kg (lbs)	35 (80)	175 (400)
Days of operation per year	260	260
Wash cycle time, minutes	40	40
Dry cycle time, minutes	40	40
Average or range of baseline emissions per plant, megagrams, VOC/year (tons VOC/year)	40-55 (44-60)	140 (154)
Average or range of baseline emissions nationwide, megagrams VOC/year (tons VOC/year)	2,400-3,300 (2,600-3,600)	28,800 (26,200)

medium-capacity dryers are used to facilitate the separation of job loads and to avoid downtime caused by equipment breakdowns. There are an estimated 60 model plant I petroleum dry cleaners in the United States (approximately 25 percent of all large petroleum dry cleaning facilities) (Sluizer, 1980). Data on model I plants are summarized in Table 2-2.

2.5.2 Model Plant II

Facilities represented by model plant II process the same types of articles as model I plants, but have much larger throughputs and equipment. Model II plants have a throughput of 2,400 kg/day (5,400 lb/day) or more of heavy fabrics that are heavily soiled. Because these plants have high throughputs, they require sturdy equipment with large capacities for almost continuous operation. There are an estimated 170 model II petroleum dry cleaners in the United States representing 75 percent of the total number of large plants (Sluizer, 1980). Table 2-2 presents additional information on model II plants.

2.6 REFERENCES FOR CHAPTER 2

Andrasik, I. 1981. International Fabricare Institute (IFI). Letter to Q. Corey, TRW Inc., July 20. Solvent content of still waste.

Burnett, E. 1980. Aratex, Inc., Telecon with Q. Corey, TRW Inc., November 25. Solvent content of still wastes.

Fisher, W. 1975. ABC's of Solvent Mileage, Part 1. IFI. Joliet, Illinois. Special Reporter Vol. 3, No. 4. July-August.

Fisher, W. 1980a. IFI, Meeting with S. Plaisance, TRW Inc., December 9. Number of cartridge filters in use.

Fisher, W. 1980b. IFI, Telecon with Q. Corey, TRW Inc., January 16. Comments on the size of the commercial petroleum dry cleaning industry and the throughput from a typical plant.

Fisher, W. 1981. IFI, Telecon with S. Plaisance, TRW Inc., Oct. 16. Comments on alternative methods of filtration waste solvent content reduction.

International Fabricare Institute (IFI), 1973. An Introduction to Industrial Dry Cleaning Methods, Part One. IFI Special Reporter. Volume One, Number Three. Joliet, Illinois.

Jernigan, R. and J. Kezerle, 1980. Evaluation of the Potential for Reduction of Solvent Losses through a Washex Petroleum Vacuum Still Sump. TRW Inc. Research Triangle Park, North Carolina (EPA Contract No. 68-03-2560, Task No. T5013).

Jernigan, R. and S. Lutz. 1979. An Evaluation of the Emission Reduction Potential of a Solvent Recovery Dry Cleaning Dryer. TRW Inc. Research Triangle Park, North Carolina (EPA Contract No. 68-03-2560).

Landon, S. 1981. Washex Machinery Inc., Telecon with Q. Corey, TRW Inc., July 20. The use and operation of solvent vacuum stills.

Leonhardt, G. 1966. Filter Aids. National Institute of Dry Cleaning. Silver Spring, Maryland. (NID) Bulletin, p. 75. July.

Lutz, S., S. Mulligan, and A. Nunn. 1980. Demonstration of Carbon Adsorption Technology for Petroleum Dry Cleaning Plants. EPA Publication No. EPA-600/2-80-145. EPA/IERL. Cincinnati, Ohio.

Marvel Manufacturing Co., Washex Machinery, Inc., American Laundry Machinery, W.M. Cissel Manufacturing Co., VIC Manufacturing Co. and Challenge-Cook Brothers, Inc. 1980. Telecon Survey with Q. Corey, TRW Inc., March 18-April 25. Sizes of petroleum dry cleaning equipment and expected sales for 1980.

National Fire Protection Association. 1979. Report No. 32, Dry Cleaning Plants, Boston, Massachusetts.

NID. 1971. Estimation of Solvent Vapor Emission from Petroleum Dry Cleaning Plants. National Institute of Drycleaning. Publication No. T-486. Silver Spring, Maryland. February.

Rosenthal, S. 1980. Washex Machinery Inc., Telecon with S. Plaisance, TRW Inc., November 18. The use of solvent filtration systems and vacuum stills.

Sluizer, M. 1981. Institute of Industrial Launderers, Meeting with S. Plaisance, TRW Inc., January 8. Size of the industrial petroleum dry cleaning industry and the throughput of a typical plant.

Sluizer, M. 1981. Institute of Industrial Launderers, Telecon with S. Plaisance, TRW Inc., April 10. Size of the industrial petroleum dry cleaning industry and the throughput of a typical plant.

Washex. 1973. Installation, Operation and Maintenance Manual for Washex Vacuum Stills. Publication No. T-513d. Wichita Falls, Texas. July.

Washex. 1974. Instruction Manual for Washex MAB-Type Tube Filters. Publication No. T-605. Wichita Falls, Texas. September.

Watts, A. and A. Fisher. 1975. Results of Membership Survey of Dry Cleaning Operations. Joliet, Illinois. IFI Special Reporter 3-1. January-February.

3. EMISSION CONTROL TECHNIQUES

Equipment and procedures selected as representing reasonably available control technology (RACT) for the petroleum dry cleaning industry are described in this chapter. Particular attention is given to the design, operation, and VOC emission-reduction performance of RACT equipment, with verification of these criteria being supported, where possible, by engineering analyses and field test data (see Appendix A). The effects of variations in and deviations from the equipment configurations and operating procedures characteristic of the two model plants developed in Chapter 2 are analyzed in relation to their impacts on VOC emission reduction and overall equipment performance.

3.1 RECOVERY DRYER

A solvent recovery dryer is essentially a standard dryer that has been fitted with a condenser to remove solvent vapor from the dryer exhaust by condensation (see Figure 3-1). In the current configuration of this machine, a steam-heated air stream is directed around and through a tumbling load of drying articles by a blower that forces the solvent-laden air stream through a lint filter and then to a condenser. After partial removal of both solvent and water vapors in the condenser, the air stream is ducted from the condenser to a steam chest where it is reheated and then passes to the tumbler where the cycle of solvent evaporation repeats.

The most important component of this solvent recovery system is the condenser, which gradually reduces the concentrations of both solvent and water vapors in the air stream during every evaporation-condensation cycle. The currently marketed recovery dryer employs a condenser to remove both solvent and water from the incoming vapor stream by steadily reducing the vapor temperature (under the existing conditions of vapor

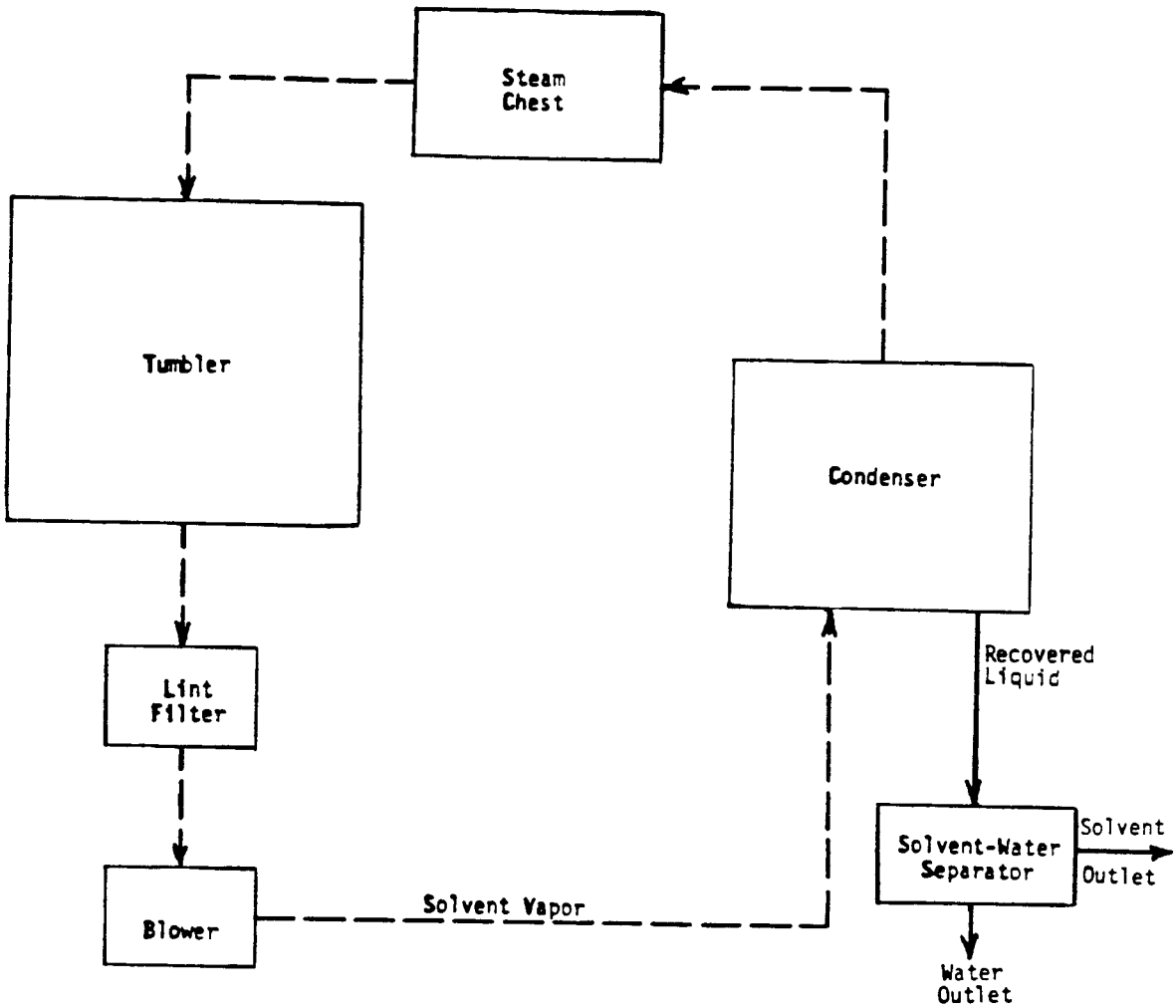

Figure 3-1. Solvent Vapor Flow Diagram for a Recovery Dryer.

flow and pressure). As the vapor stream is forced through the condenser, chilled water circulates downward through the tube structure and cools the vapor stream until a liquid solvent and water mixture condenses (as heat is transferred from the vapor stream to the chilled water). This mixture flows to the bottom of the condenser where it is piped to a solvent/ water separator. Because petroleum solvent has a specific gravity of about 0.75, the water contained in the condenser runoff forms the bottom liquid phase which is removed from the bottom of the unit while solvent flows from the top.

To prevent the excessive wrinkling of clothes, the recovery dryer has a second, exhaust/cool-down phase similar to that found in some of the more sophisticated standard dryers. In the solvent recovery phase (Figure 3-2a), the air stream flows [at a manufacturer-rated volumetric flow rate of 17.7 m^3/min (Hoyt, 1979)] from the steam chest through the tumbler, to the condenser, and then back to the steam chest. The cooling water flow during this phase is from the cooler to a storage tank, to the condenser, and then back to the cooler. Solenoid valves, controlling both steam and cooling-water flows, are intermittently opened in response to thermostats that maintain both a tumbler temperature sufficiently high enough to promote solvent evaporation from tumbling fabrics and a condenser water inlet flow rate great enough to ensure adequate condenser heat-removal for optimum VOC emission reduction/recovery. At the onset of the exhaust/cool-down phase (see Figure 3-2b), both the steam and cooling water solenoids close while atmospheric air and vapor stream dampers divert vapor flow from the condenser loop, thereby permitting the intake of atmospheric air which is forced over the tumbling articles and exhausted to the atmosphere.

Control of the duration of these two phases is accomplished by two timers that can be individually set for a wide range of recovery and exhaust/cool-down periods. Typically, the duration of the recovery phase ranges from 20 to 45 minutes, while that of the exhaust/cool-down phase ranges from 2 to 6 minutes (Plaisance et al., 1981). Thermostatically controlled shutoff valves that govern tumbler temperatures (steam flow) and condenser water inlet temperatures (water flow) can be adjusted to protect drying articles from overheating and to

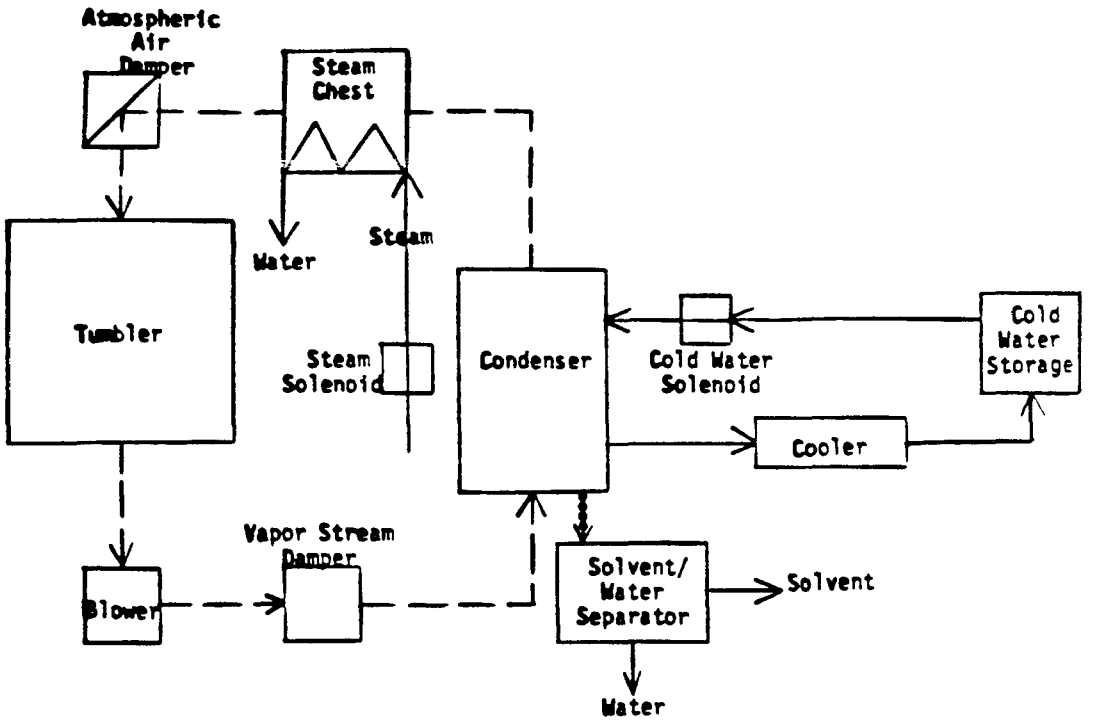

3-2.a Recovery Phase

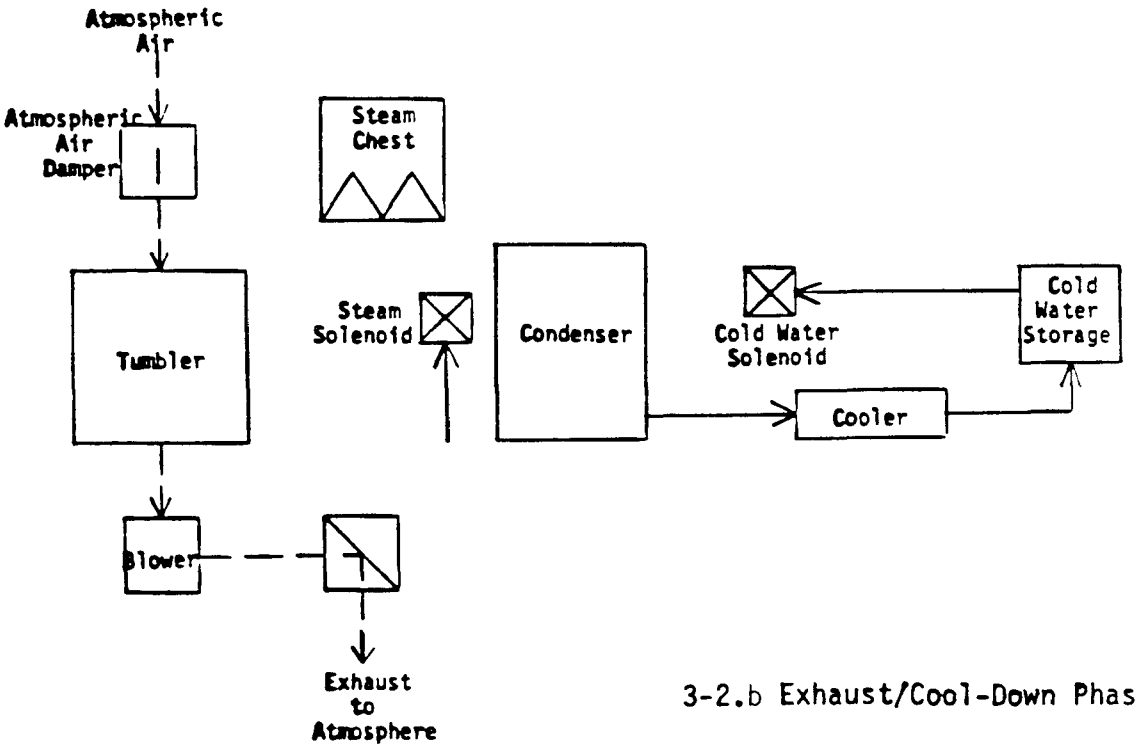

3-2.b Exhaust/Cool-Down Phase

Figure 3-2. Operating Cycles of the Existing Recovery Dryer.

maintain optimum VOC emission reduction/recovery. A manually-adjustable valve in the condenser water inlet line permits regulation of the water flow rate. A manually-adjustable pressure control in the steam chest inlet provides a controlled steam pressure for the heating of the vapor stream.

In the event of an explosion in the dryer, the pressure of the blast is released upward from the tumbler through vents specifically designed for this purpose, while steam is automatically injected into the tumbler. In addition, a fusible wire spanning the condenser vapor inlet will melt above a predetermined temperature, shutting down the electrical system and terminating dryer operations.

The level of emission reduction attained by the recovery dryer is based on the assumption that all solvent entering the dryer in garments is either recovered or emitted to the atmosphere during the cool-down/exhaust phase (in contrast to standard dryers which emit their entire solvent content to the atmosphere). Thus, the VOC emission reduction is equal to the solvent recovery. Furthermore, it is assumed that garments leaving the dryer are "dry" (contain no solvent), and that there are no random or unspecified losses within the evaporation-condensation system. (Results of recovery dryer field tests are inconclusive concerning the solvent content of dried items; however, there are indications that drying time, load weight, fabric type, and condenser temperature and flow (both vapor and liquid) all cause variations in the solvent content of dried articles.) Based on these assumptions, the recovery dryer performance parameters of primary importance are VOC emission reduction and solvent recovery.

Three EPA test programs have been completed at facilities operating domestically manufactured 48 kg (105 lb) capacity recovery dryers. The first test was conducted at a large industrial dry cleaning facility (see Appendix A, Test 1) in Pico Rivera, California that processes approximately 1,300 kg (2,900 lbs) of heavy work gloves each day. Results from the measurement of the vapor concentration and flow rate during the exhaust/cool-down phase were an average (for the entire test period) dryer VOC emission of 0.96 kg VOC per 100 kg dry weight of

articles cleaned, and a range from 0.68 to 1.25 kg VOC per 100 kg articles cleaned. The condenser reclaimed an average of 23.4 kg of solvent per 100 kg articles cleaned, with a range of 15.5 to 29.2 kg. Furthermore, the dryer appeared, at times, to operate at or above 90 percent of the 10,000 parts per million LEL concentration for petroleum solvent (measured at the condenser inlet during the recovery phase), although the existence and extent of the excursions above 90 percent were not verified because the solvent concentrations exceeded the capacity of the detection instrument. Possible explanations for this apparent excursion center around the fact that the dryer was typically loaded beyond manufacturer's specifications (by as much as 20 percent), with articles (gloves) having the unusually high solvent retention of as much as 30 percent by weight (Jernigan and Lutz, 1979).

A second EPA recovery dryer test was undertaken at a large commercial plant in Lakeland, Florida (see Appendix A, Test 2) that processes approximately 180 kg (400 pounds) of general apparel each day. Again, solvent vapor concentrations in the condenser vapor inlet and atmospheric exhaust were monitored, as were the flow rate and mass of recovered solvent. The average (over the test period) VOC dryer emissions vented during the exhaust/cool-down phase was found to be 3.85 kg VOC per 100 kg dry weight of articles cleaned and ranged from 9.45 to 2.34 kg VOC per 100 kg articles cleaned. The condenser reclaimed an average of 10.4 kg of solvent per 100 kg articles claimed, with a range of 9 to 14.3 kg. Solvent vapor concentrations in the condenser inlet stream never exceeded 95 percent of the solvent LEL and ranged from 4,410 to 9,425 ppmv as solvent. The reduced VOC emission reduction value was possibly due to the processing of small loads (typically 50-60 percent of dryer capacity) of garments (principally synthetics) having a low solvent retention. Also, recovery periods were relatively brief (usually lasting no more than 30 minutes), resulting in the premature termination of the recovery phase and a corresponding increase in the solvent content of dried articles (Jernigan et al., 1981).

A third EPA recovery dryer test was conducted at a large commerical plant in West Warwick, Rhode Island (see Appendix A, Test 3) that cleans about 2,700 kg (6,000 lb) of personal clothing per week (Plaisance et al., 1981). Both dryer condenser vapor inlet and dryer atmospheric

exhaust concentrations were monitored, and data on the volume and flow rate of recovered solvent were collected. The average (for the test period) dryer VOC emissions vented during the exhaust/cool-down phase was 3.47 kg VOC per 100 kg of articles dry cleaned, with a range of 1.2 kg to 7.2 kg. The condenser reclaimed an average of 13 kg per 100 kg of articles cleaned with a range of 9.5 to 17.7 kg. The average maximum solvent concentration in the dryer, during the recovery cycle was measured as 3,100 ppmv, with a range of 2,800 to 3,500 ppmv. Dryer operating parameters such as load weight, fabric composition, recovery duration, and cooling water flow rate were varied to examine their effects on emissions, concentrations, and recovery. The weight of the wet articles placed in the dryer and the decrease in the vapor stream temperature in the condenser were found to have the greatest influence on solvent recovery and VOC emissions, with larger loads and greater condenser temperature decreases resulting in lower emissions and higher recovery. In addition, increasing the drying temperature inside the tumbler during recovery was found to increase the magnitude of the maximum solvent concentration in the exhaust. The measurement of these concentrations, however, was hampered by problems with both plant and testing equipment resulting from very low ambient temperatures, and the absolute magnitudes of these concentrations, when compared with previous test data, were extremely low and probably inaccurate.

The installation of currently-manufactured recovery dryers in existing petroleum dry cleaning plants would involve the replacement of standard dryers with recovery units. Although steam (2.5 boiler horsepower at 410 kilopascals) and electrical (1.5 motor horsepower at 230 volts) demands and connections would be similar for both units, the recovery dryer would require additional connections of pressurized air (0.04 cubic meters per minute at 275 kilopascals) and cooling water. The demand for cooling water in the 48 kg (105 lb) recovery dryer is typically satisfied by municipal water, a cooling tower, or a chiller with a minimum output capacity of 11.4 liters per minute (3 gal/min), and a temperature of 13°C (55°F) (Hoyt, 1979). Meeting these cooling water specifications in cool, dry climates may involve only a connection to municipal water or the installation of a relatively inexpensive cooling tower; however,

hotter, humid climates may require the lower temperatures associated with a chiller, which is inherently more expensive to buy and operate (costing up to 250 percent more than a cooling tower).

Proper operation of a currently manufactured recovery dryer would be based primarily on maintaining high VOC emission reduction/recovery. Adherence to dryer manufacturer's specifications in the areas of steam pressure, condenser water inlet flow rate and temperature, tumbler drying temperature, and tumbler load weight should ensure adequate performance and safety. Operating within the range of manufacturer's specifications, tests have shown that VOC emission reduction/recovery can be maximized by drying larger load weights (up to the rated capacity) while optimizing heat transfer within the condenser for a more complete removal of solvent from drying articles (Plaisance et al., 1981).

Heat transfer in the recovery dryer condenser was found to be at its maximum (defined as the highest average VOC emission reduction/ recovery per dry weight of articles cleaned) when the temperature decrease of the condenser vapor stream was at its maximum (Plaisance et al., 1981). For a given drying temperature and cooling water flow rate, this optimum operating condition could be indicated by the temperature difference between the condenser cooling water inlet and outlet which should not exceed about 15°C (27°F) during the recovery cycle, according to the dryer manufacturer.

Figure 3-3 illustrates a typical recovery phase that meets the conditions stated previously. The initial rapid solvent recovery gradually decreases to a near constant value (little or no additional recovery with time). During this dryer load, the average condenser water inlet and outlet temperatures are 21°C (70°F) and 30°C (86°F). The concentration of solvent vapor in the condenser gas inlet also is shown for the same recovery phase. Initial high concentrations correspond to rapid increases in the volume of recovered solvent; however, as the duration of the recovery phase increases, the concentration of solvent vapor tends to level off, thus indicating a minimum recovery phase duration necessary for optimization of VOC emission reduction/recovery.

The recovery dryer solvent recovery rate data collected in the second large commercial plant recovery dryer test (Plaisance et al.,

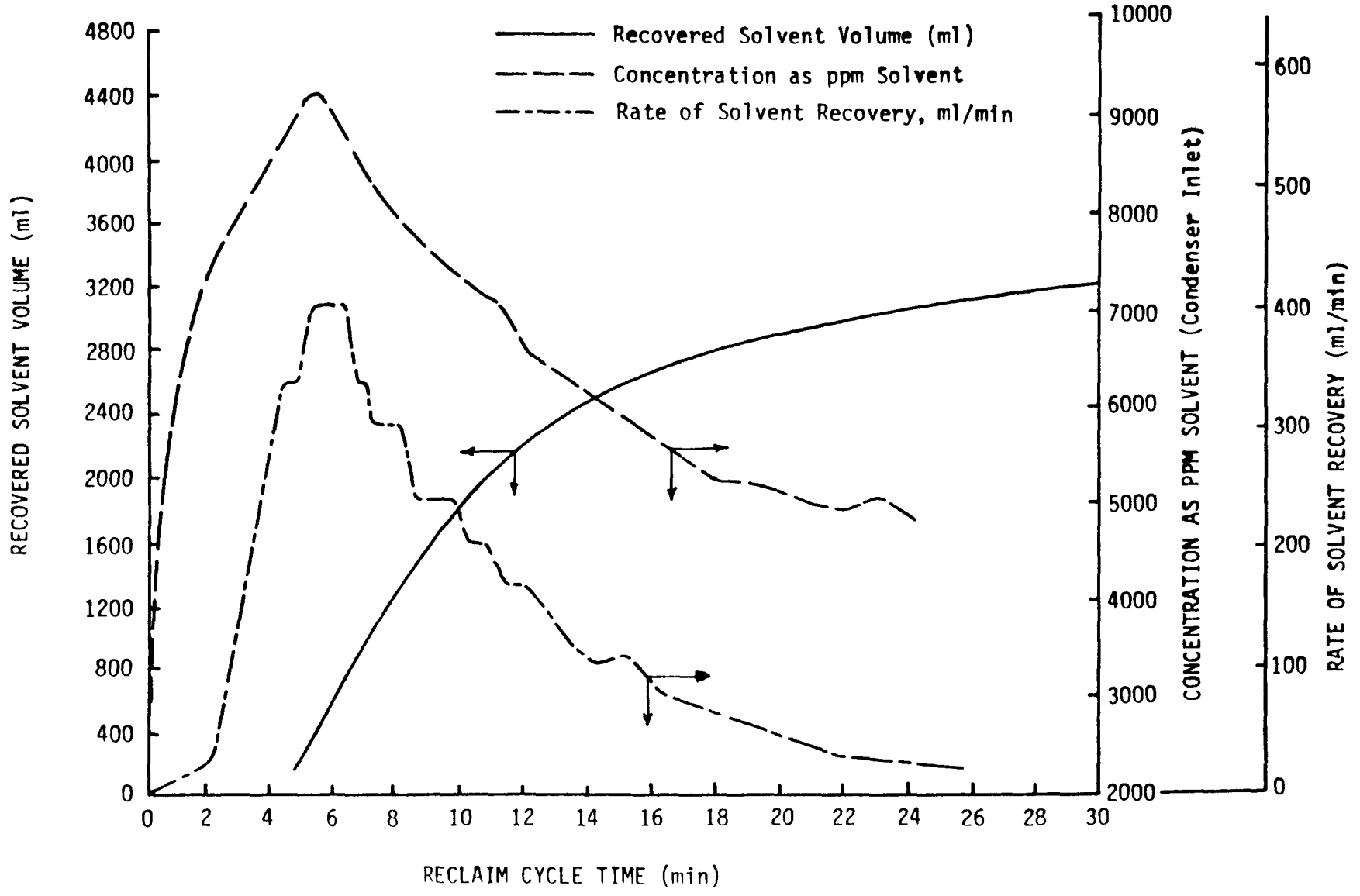

Figure 3-3. Solvent recovery and concentration curve for the recovery dryer.

1981) was analyzed by EPA to evaluate the relationship between the flow rate of recovered solvent and the dryer emissions measured during the exhaust cycle. These data were selected for analysis because conditions of fabrics, load weights, recovery durations, and operating parameters varied over a range that might be typical in a large segment of the industry. The flow rate of recovered solvent at the end of each recovery cycle was calculated. A comparison of these results indicated that a final recovered solvent flow rate of 0.05 liters per minute was the highest value encountered in any of the loads examined. Although this value could not be correlated with a definitive VOC emissions value for the exhaust cycle, an analysis of graphs of the recovered solvent flow rate indicated that this 0.05 liter per minute flow rate could be used to indicate a point of diminishing returns (see Figure 4-2). Beyond this level additional recovery cycle time would produce only minmal increases in the volume of recovered solvent. This evaluation indicates that the 0.05 liter per minute recovered solvent flow rate could be used as an indication of a minimum recovery cycle duration. While the actual exhaust cycle VOC emissions would continue to vary as a function of load composition, weight, and operating parameters, the 0.05 liter per minute rate could provide a basis for establishing recovery cycle durations that reflect variations in loading and operating parameters.

Floor and overhead space requirements are similar for standard and recovery dryers and present little difficulty for smaller facilities; however, the replacement of a single 180 kg (400 lb) capacity standard dryer with four 48 kg (105 lb) capacity recovery dryers (currently, recovery dryers are made in only 23 and 48 kg capacities) would necessitate increasing the floor area required for dryers by approximately 30 percent from approximately 28 to 37 square meters (300 to 400 square feet). The need for additional floor space could force some large industrial plant operators to restructure the layout of their dry cleaning equipment, and may require an addition to an existing building or the acquisition of additional space by lease, purchase, or construction. Most of these facilities, however, should have sufficient space in their existing plants to accommodate the recovery dryers.

3.2 RECOVERY DRYER SAFETY

Solvent recovery by chilled condensation is a new technology as applied to petroleum dry cleaning. With only one domestic manufacturer producing recovery dryers since 1978, there are fundamental questions of safety to be addressed. These questions center on three major topics which will be discussed below: the concentration of solvent in the dryer tumbler during recovery, the ignition sources associated with the dryer and the effects of an explosion, and the acceptability of the dryer to agencies such as fire marshals and insurance underwriters.

Measurement of the maximum solvent concentration in the recovery dryer tumbler during the recovery cycle was one of the objectives in all three EPA field tests of the unit. Unfortunately, difficulties associated with measuring high concentrations of petroleum solvent in a vapor stream cast doubts on the validity of much of the data obtained, and the only test with reasonably accurate maximum concentration measurements was conducted in a plant that dried small loads of synthetics, atypical of most of the industry. Furthermore, in the only test of a recovery dryer in an industrial plant, the concentration-measuring instrument (FIA) became saturated with solvent and continued to register a concentration of 9,000 ppmv while the actual concentration in the dryer apparently continued to increase and probably exceeded the solvent lower explosive limit (LEL) of 10,000 ppmv (Ashland, 1980). In the third test, the difficulty of preventing solvent vapor condensation in the FIA sample lines produced unrealistically low readings of maximum concentrations. Thus, while there are no test data showing dryer concentrations in excess of the solvent LEL, an examination of the existing data indicates that there is a high probability, depending on the weight of articles being dried and the drying temperature, that the concentration of solvent in the tumbler does, indeed, exceed the solvent LEL at some point in the recovery cycle. And while this condition would not occur in every drying load, it would tend to occur in larger facilities where large loads would be dried at higher temperatures to decrease the overall drying time.

Possible sources of ignition in the recovery dryer are limited to static electricity and flammable objects (matches and lighters) contained in the drying articles. Dryer wiring and controls are contained in enclosures that meet or exceed National Fire Protection Association (NFPA) regulations for dry cleaning dryers. Also, the dryer tumbler is fitted with a grounding system which, when properly grounded, should dispell static electricity. As a consequence of these design features, the primary source of ignition would be flammable objects, which should be removed from articles prior to washing. While flammable objects could be a significant problem in smaller plants that process personal articles or uniforms, static electrical spark would present the greatest problem in large plants that might process large volumes of static-prone material such as felt or synthetics.

Based on the assumptions that the solvent concentration in the recovery dryer tumbler reaches and exceeds the solvent LEL and that an ignition source is present and active, what, in theory, occurs during a recovery dryer "explosion"? First, the solvent vapor around the point of ignition burns very rapidly (flashes), and the line of vapor combustion (or flame front) spreads rapidly through the tumbler. The extremely rapid pressure increase brought about by the vapor combustion opens the spring loaded explosion dampers on the top of the tumbler, and, after the excess pressure is instantaneously released, the dampers close to prevent inflow of air that would support further combustion. At the same time, a set of weights attached to one of the dampers activates both a valve that injects steam into the tumbler and a switch that stops the vapor circulation blower. Thus, while the force of the vapor explosion is released and directed upward away from personnel and other equipment, the occurrence of a fire in the tumbler is prevented by the elimination of combustion air and the injection of steam into the tumbler. (In contrast, the ignition of solvent vapors in a non-recovery dryer often results in fires which are fed by the continuous inflow of ambient air.)

Two recovery dryer explosions have been documented since production of the unit began approximately two years ago, and these have been examined as to their causes and consequences. (Other explosions have been reported but specific details are unavailable.) The first explosion

occurred in December of 1979 at a commercial dry cleaning plant. According to the owner, the explosion took place during the drying of a 45 kg (100 lb) load of synthetic fabrics. The owner said there was a loud noise from the top of the dryer, and the tumbler basket was knocked out of alignment. The owner further explained that the dryer may not have been properly grounded, and that the synthetic fabric's high potential for static may have combined with the extremely low humidity at the time to produce a static spark. Damage resulting from the event was limited to the drying articles which were scorched and to the dryer (tumbler basket) which was replaced by the manufacturer.

The second recovery dryer explosion occurred in March 1981 at a small industrial dry cleaner. A load of felt grain mill filtration bags was being dried at the time and a member of the plant management explained that the combination of the high static potential of the felt material and the presence of grain dust probably combined to produce the explosion. This individual was standing about four feet from the dryer when it exploded, and he described the effect as being like the sonic boom from a jet airplane. No personal injuries resulted from the explosion, and damage to the plant was limited to two plate-glass windows which were broken. The only damage to the dryer was disalignment of the tumbler basket shaft which was quickly realigned by plant personnel and tearing of the lint filter bag which was replaced. Of the 12 bags in the tumbler, only five had to be replaced due to minor scorching. The manager said that he intended to improve the dryer grounding and to vent the dryer explosion dampers to the outside. Finally, he said he was pleased with the design, performance, and safety of the dryer.

Because the technology of condensation recovery of petroleum dry cleaning solvent is relatively new, the EPA conducted an examination of the design, performance, and safety of solvent recovery dryers in Japan (Jernigan, 1981). These dryers have been in use there for over five years, and their design and performance is very similar to that of the units manufactured in the United States. In both units, steam heated air evaporates solvent from drying articles, and the solvent vapor is liquified and recovered by a refrigerant-chilled condenser. The main difference between the Japanese and domestic recovery dryer is the dryer

capacity which is limited to 23 kg (50 lb) in Japan, with units having capacities of 10 kg (22 lb) being most prevalent. Throughout Japan, there are about 1,800 recovery dryers and 5,900 standard (nonrecovery) dryers. Additionally, according to Japanese dryer manufacturers, there have been about 17 recovery dryer explosions and 50 standard dryer fires in the past five years. Thus, the frequency of explosions in Japanese recovery dryers has been almost identical to that of fires in standard dryers (about one occurrence per 1,000 dryers in the past five years).

The primary concern involved in the acceptance and approval of the recovery dryer by fire control agencies and insurance underwriters is the level of fire hazard inherent in the operation of the dryer. In order to gain this approval, the manufacturer has submitted the dryer for examination by Factory Mutual (a firm specializing in performance and safety testing) which has approved the unit and has included it in the 1981 published approval listing as the petroleum solvent dryer with current approval (Factory Mutual System, 1981). In addition, the dryer has received the general approval of the Los Angeles Fire Department (Los Angeles Fire Department, 1981).

A survey of dry cleaning plants that have installed the recovery dryer indicates that there have been no problems with insurance companies resulting from the operation of the recovery dryer (Corey, 1981). In general, these companies view the unit as another piece of dry cleaning process equipment and as such, insurance rates usually increase somewhat based on the addition of the dryer value to the overall facility. When underwriters insuring the dryer were questioned about the insurability of the unit, they generally said that approval by one of the major testing laboratories (Factory Mutual), together with approval by state and local fire officials, was sufficient to indicate that the dryer requires no specialized insurance coverage.

At the local level, a survey of fire marshals in areas where recovery dryers have been installed indicates that the unit's approval by Factory Mutual has resulted in initial acceptance by fire marshals who were aware of the dryer's presence (Corey, 1981). In most cases, however, the continuation of this initial approval was contingent on the frequency

of explosions and accidents associated with the dryer, and an increase in the number of dryer accidents could result in revocation of this approval.

In summation, the initial approval of the recovery dryer by individual dry cleaners, fire marshals, and insurance underwriters was based on the unit's approval by Factory Mutual and on its record of safety since 1978. Factory Mutual, in turn, has based its approval of the unit on its ability to safely contain and control an explosion, with the assumption that the solvent concentration in the dryer reaches and exceeds the solvent LEL and that an ignition source is present and active in the dryer (Kennes, 1981). Industry representatives have expressed concern that the requirement for installation and operation of solvent recovery dryers could conflict with local fire safety codes or create situations in which petroleum dry cleaning plants could not be insured (Vanderver, 1982). Even though Factory Mutual has certified the one U.S.-made recovery dryer, agencies should ascertain whether this is sufficient in their state or locality. Although EPA has found no instances in which a fire marshal or insurance underwriter prohibited the installation of a solvent recovery dryer, appropriate fire safety officials and insurance industry representatives should be involved early in the process of developing any regulations.

3.3 CARTRIDGE FILTRATION

Cartridge filtration is a continuous, two-stage process of filtration in which soil-laden liquid is forced under pressure first through a paper filter to remove entrained solids and then through a layer or layers of activated carbon which selectively entrap molecules of impurities in their porous surface. The term "cartridge" is used to denote replaceable units or cartridges containing filtration paper and carbon or only carbon. Currently, it is estimated that 50 percent of the petroleum dry cleaning plants using solvent filtration employ cartridge filtration or approximately 3,000 plants (Fisher, 1980).

Cartridge filtration, as applied to the petroleum solvent dry cleaning industry, is a process in which soil-laden solvent is pumped from a washer to a vessel containing filter cartridges (see Figure 3-4).

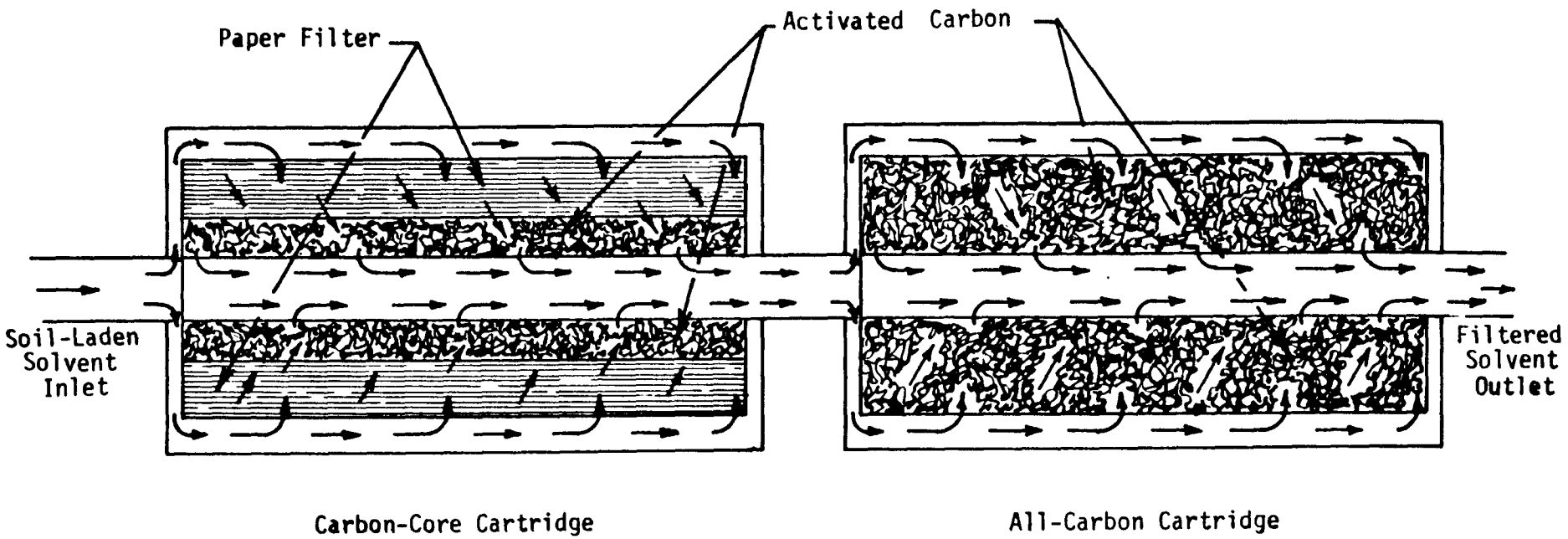

Figure 3-4. Cartridge Filtration System Schematic.

This vessel normally has a removable, pressure-sealed lid or top and can contain from 2 to 36 cartridges. Soil-laden solvent is initially forced under pressure through dual-component cartridges that contain both filter paper and carbon. In this process, solid particles of lint and dirt are trapped in the paper, and the included activated carbon serves to remove soluble impurities such as fabric dyes. Next, the solvent is diverted to one or more filter cartridges containing only activated carbon which continue the initial removal of soluble impurities. After passing through this final stage, the solvent is transferred to storage to await distillation and reuse (Puritan, 1980).

Currently manufactured filter cartridges fall into two distinct categories: carbon-core cartridges and all-carbon cartridges. Carbon-core cartridges (see Figure 3-4) are encased in an outer metallic housing that is perforated around its circumference to permit solvent inflow. Beneath this outer rigid structure lies a circumferential layer of filtration paper that is folded accordian-style into a deeply-corrugated cylinder surrounding the inner core. This fibrous paper, similar to that found in an automotive oil filter, permits the pressurized solvent to flow inward to the core while trapping particles of dirt and lint along its extensive surface. Beneath this layer of filter paper lies the slotted metal surface of the core tube which contains granular activated carbon (Puritan, 1980). In passing through this material, the larger molecules of impurities such as fabric dyes are adsorbed by the carbon granules. The all-carbon cartridge (see Figure 3-4) continues the purification of the solvent which began at the carbon-core cartridge. Solvent flowing through the slots of the metal canister is forced through the enclosed activated carbon, resulting in additional removal of impurities and the outflow of a solid-free, purified solvent.

Although the process flow of carbon-core to all-carbon is typical of most cartridge filter installations, the containment, number, and physical arrangement of the cartridges varies widely as a function of the system's capacity. Cartridge filtration systems are "sized" by their manufacturer, based on the dry-weight load capacity of the existing washer (Puritan, 1980). The size of the system usually refers to the total number of filter cartridges it contains. The actual distribution

of these cartridges ranges from a group of small, interconnected vessels containing one or two cartridges to one or more cylindrical tanks containing as many as 36 carbon-core cartridges that are connected to an additional vessel or vessels containing multiple all-carbon cartridges (Puritan, 1980).

The operation of a cartridge filtration system can be based on either the continuous (during washer operation) or batch (at predetermined intervals) processing of spent solvent. In continuous operations, the spent solvent in the washer is pumped through the filter and back to a filtered solvent tank. As this process continues on a day-to-day basis, the outer surfaces of the filter paper in each carbon-core cartridge become clogged with dirt and lint, while the carbon granules contained in both types of cartridges become coated with dyes and particles until they no longer purify the solvent stream. Dry cleaning trade association tests have shown that, under typical commercial conditions of soil-loading and throughput, the "life" of a filter cartridge is somewhere between 450 kg (1,000 lbs) and 500 kg (1,100 lbs) of articles washed (Bee and Fisher, 1976). Under conditions of heavy soil loading, however, the need for cartridge replacement is best indicated by the buildup of solvent pressure in the vessel due to the flow restriction posed by the clogged cartridges.

Atmospheric emissions from cartridge filters are limited to fugitive emissions that evolve from leaks and filter cartridge replacement, as well as from the evaporation of solvent contained in disposed cartridges. An EPA test of the amount of solvent contained in discarded filter cartridges was conducted at a Wilmington, North Carolina petroleum solvent dry cleaning plant that processes approximately 180 kg (400 lbs) of general apparel per day in a single 27 kg (60 lb) capacity washer (Plaisance, 1981). A 14-element cartridge filtration system was operated without cartridge replacement over a period of time when the plant had a throughput of approximately 8,600 kg (19,000 lbs.) of clothes washed. Results of this test indicated that draining the filter cartridges in their closed housing for at least 8 hours would result in an average solvent emission per cartridge of 1.6 kg (3.4 lbs). Based on an assumed cartridge life of 450 kg (1,000 lbs) of throughput, this would result in

0.35 kg of solvent being emitted per 100 kg of clothing throughput (Plaisance, 1981). Figure 3-5 illustrates the effect of drainage time on VOC emissions from discarded filter cartridges. The majority of the drainage takes place during the initial few minutes when liquid solvent is running freely from the canisters. After 8 hours of drainage, the cartridges have lost 37 percent of their undrained solvent content. After an additional 4 hours, they have lost only 3 percent more, thus illustrating that extended drainage periods are unnecessary.

The value of cartridge VOC emissions per 100 kg dry weight of articles cleaned, obtained above, is in general agreement with a dry cleaning trade association estimate of 0.75 kg per 100 kg of articles cleaned (NID, 1971). However, the previously described EPA-sponsored test could have been more in agreement with the industry estimate if the emissions from carbon-core cartridges alone had been considered. Also, in the determination of cartridge weight losses, it was assumed that all weight losses were due to solvent evaporation, thus ignoring the presence of water and its evaporation. However, this is considered insignificant.

The emission reduction/recovery efficiency of the cartridge filter compared with the diatomite filter is 88 percent, based on average VOC emissions for cartridge and diatomite filters of less than 1 kg and 8 kg, respectively, per 100 kg dry weight of articles cleaned. This major emission reduction primarily results from diatomite filter emissions that typically occur daily, while cartridge filter emissions result from infrequent cartridge element replacement.

Installation of a cartridge filtration system would require the removal of the existing filtration system (usually a diatomite filter) and the connection of the cartridge vessel to existing lines. No utility connections (steam or electricity) are normally required, and the only retrofit problems that might be encountered concern the allocation of space (larger cartridge systems can occupy a substantial area) and the possibility of replacing the filter feed pump (maintains solvent pressure to the filter).

There is a current controversy in the dry cleaning industry concerning the cartridge filter's ability to eliminate the need for distillation. Although some plants have ceased their vacuum still operations after the

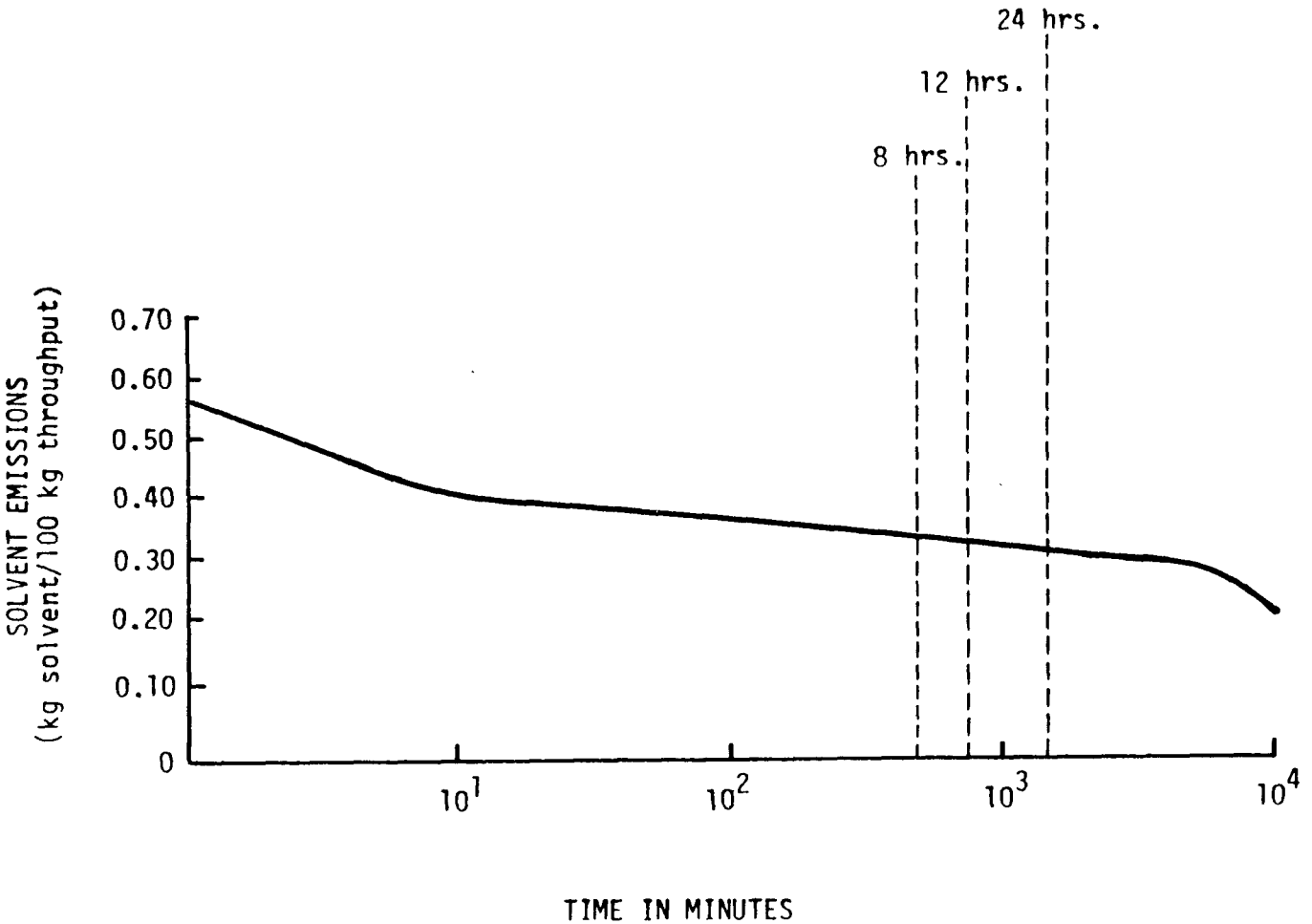

Figure 3-5. Solvent Emissions for Filter Cartridges as a Function of Drainage Time.

installation of cartridge systems (Plaisance, 1981), both cartridge filter manufacturers (Puritan, 1980) and dry cleaning trade associations (Bee and Fisher, 1976) maintain that distillation is a necessary part of the process of solvent rejuvenation and that it is the only method for removing solvent-soluble impurities such as grease and oil. The installation of cartridge filtration equipment could, however, decrease the frequency of solvent distillation, and thus reduce not only filtration emissions, but also emissions associated with still wastes. Small plants with light soil loadings, in particular, could reduce their frequency of distillation by using cartridge filters to maintain the clarity of their solvent.

3.4 VACUUM DISTILLATION

Atmospheric emissions resulting from the operation of vacuum stills (see Section 2.3.4 for a distillation process description) are a function of the still design, operation, and the frequency of still utilization. To maintain the color (purity) of the solvent used in washing, a dry cleaning plant operator will often adhere to a still boildown schedule that requires solvent distillation at intervals ranging from daily to weekly. Also, the design of some stills is such that, regardless of the boildown period, there will be a fixed volume of solvent-laden residue at the end of the operation.

Specific operating and maintenance parameters cannot be established that produce commensurate VOC emissions levels due to the variability of still design, throughput, and soil loadings. However, general parameters indicative of acceptable operating conditions will be delineated as a guideline to minimizing VOC emissions from still residue.

According to a still manufacturer, one of the principal influences on the solvent content of still residue is the frequency of still boildown. Although many existing plants boil down their stills on a routine or convenient schedule, the still manufacturer recommends that boildown be undertaken only after the flow rate of condensed liquid (solvent and water) between the condenser and moisture separator has been reduced by approximately 75 percent (Washex, 1973). The duration of boildown should continue until the flow rate of condensed liquid has been again

reduced by 75 percent, with the full available steam pressure of 390 kilopascals (100 psi) being used to evaporate solvent from the residue. Thus, the 75 percent condensate flow reduction criterium can be applied to both normal distillation operation and to the optimum duration of boildown.

Factors affecting the rate of distillation include the solvent boiling range, the level of solvent contamination, the quantity of residue in the still, and the steam pressure. Under a typical vacuum range of 42 kilopascals to 52 kilopascals (22 inches to 27 inches of mercury), petroleum solvents with flash points of 41°C, 52°C, and 60°C boil under recommended steam pressure ranges of 136 kilopascals to 234 kilopascals (35 to 60 psi), 195 kilopascals to 253 kilopascals (50 to 65 psi), and 292 kilopascals to 351 kilopascals (75 to 90 psi), respectively (Washex, 1973). However, these steam pressure ranges will increase significantly with an increase in the quantity of contaminants in the incoming solvent. The level of residue in the still boiling chamber may also necessitate higher steam pressures in order to overcome the poor heat transfer of the accumulated residue.

A still manufacturer lists the following typical operating parameters for satisfactory still operation (Washex, 1973):

Steam Supply = 390 kilopascals (100 psi)
Condenser Water Supply = 78 kilopascals @ 18°C (20 psi @ 65°F)
Condenser Water Outlet Temperature = 60°C to 71°C (140°F to 160°F)

Condenser Solvent Outlet Temperature = 24°C to 32°C (75°F to 90°F)

While these parameters will vary as a function of the given still, plant throughput, and soil loading, they nevertheless form a general range which can be indicative of proper still operation. They are even more effective when combined with the previously discussed guidelines on still boildown duration and procedures. Principal maintenance procedures are also outlined by the still manufacturer and include removal and cleaning of the steam coils after about 1,000 hours of operation and frequent lubrication of the condensate pump (Washex, 1973).

The application of the previously discussed operating and maintenance recommendations could result in significant VOC emission reductions due

to the resultant decrease in the solvent content of disposed still waste. However, no specific data are available on reductions in still waste solvent content as a function of the implementation of these procedures. Consequently, VOC emissions from vacuum still waste stored in a given dry cleaning plant are included in the general category of fugitive emissions.

3.5 MISCELLANEOUS FUGITIVE EMISSION SOURCES

Miscellaneous fugitive emissions essentially encompass sources wherein liquid solvent or solvent-laden wastes are exposed to the atmosphere within the plant. The EPA-sponsored test program conducted at the Anaheim, California dry cleaning facility included a sampling and evaluation of VOC concentrations in the general dry cleaning environment. Significant concentrations of solvent vapor, at times approaching 70 percent of the solvent LEL, were found around both the settling tank and the new solvent tank vents. Another significant source of VOC emissions was the washer which produced concentrations nearing 10 percent of the solvent LEL in its immediate vicinity. Additional measurements of VOC concentrations in dry cleaning room roof exhaust vents yielded a VOC emission rate of 0.5 kg solvent per 100 kg of articles cleaned (Jernigan and Kezerle, 1980).

Solvent vapor losses from settling and storage tanks occur as a result of "breathing" and "working" losses. Breathing losses occur when storage tanks expand or contract during changes in temperature, resulting either in air being drawn into the tank (vapor contraction) or solvent vapor being expelled to the atmosphere (vapor expansion). In contrast, working losses result from changes in the vented free volume above the stored liquid solvent, which expels solvent vapor when the tank is filled and draws in atmospheric air when the tank is drained, thereby producing additional breathing losses as the air becomes saturated with solvent vapor.

The broad category of "leaks" can contribute significantly to miscellaneous fugitive VOC emissions. Liquid solvent drips from pipes, fittings, valves, hoses, couplings, and pumps add to the constant background of solvent vapor inherent to many dry cleaning plants. Vapor

leaks from dryers, exhaust ducts, filter housings, stills, and open or improperly sealed containers of solvent all contribute to the quantity of solvent entering the environment.

The only way to eliminate the general class of fugitive emissions is with an effective program of maintenance and training. A dry cleaning trade association has estimated that approximately 1.0 kg of VOC are emitted by miscellaneous fugitive sources for every 100 kg of articles cleaned in a typical dry cleaning facility (Fisher, 1975). This level of VOC emissions could be reduced by effecting a maintenance program that would effectively control liquid leaks and eliminate buckets and barrels of solvent standing open to the atmosphere, while also striving to eradicate vapor leaks by repairing gaskets and seals that obviously expose solvent-rich environments to the atmosphere. Inspection of solvent pumps, storage and settling tanks, water separators, and the general solvent piping system could result in substantial VOC emissions reductions through control of liquid and vapor leaks. Also, training of dry cleaning personnel could help in attaining this reduction, particularly by discouraging the practice of allowing solvent-laden loads of articles to be exposed to the atmosphere while awaiting drying.

3.6 COMBINED CONTROL TECHNIQUES

A combination of the previously discussed control techniques would result in an optimum emission reduction that could be achieved by employing currently available equipment and methods. The following list tabulates the control techniques and the anticipated range of controlled emissions. The nominal emissions values are listed in order to form a basis for comparison with estimates of uncontrolled emissions, and these values may vary widely as a function of individual plant throughput and operation.

Emission source	Control technique	Range of emissions in kg VOC/ 100 kg dry weight of articles cleaned	Nominal value of emission in kg VOC/ 100 kg dry weight of articles cleaned
Dryer	Recovery dryer	0.7-9.5	3.5
Diatomite filter	Cartridge filter	0.5-1.0	1.0

Emission source	Control technique	Range of emissions in kg VOC/ 100 kg dry weight of articles cleaned	Nominal value of emission in kg VOC/ 100 kg dry weight of articles cleaned
Vacuum still	Improved operation	1.0-7.0	3.0
Miscellaneous fugitive	Improved operation	0.5-1.0	1.0
Total Range		2.7-18.5	7.5-8.5
	Totals with existing		
	Diatomite filter		8.5
	Cartridge filter		8.5
	Settling tank		7.5

Implementation of the above processes and methods in the two model plants, as illustrated in Table 3-1, would result in an overall dry cleaning plant emission reduction of 72 to 66 percent over the existing levels discussed in Chapter 2. Model plant II, with a settling tank in both existing and controlled configurations, does not benefit from the 88 percent VOC emission reduction resulting from the replacement of diatomite with cartridge filters.

3.7 EVALUATION OF CONTROL TECHNOLOGY TRANSFER

Control of dryer emissions in the perchloroethylene (perc) dry cleaning industry has been accomplished for many years by application of existing carbon adsorption technology. Currently, 35 percent of perc dry cleaning plants (5,400) use carbon adsorption (EPA, 1980). The application of this technology to petroleum dry cleaning dryer VOC emissions reduction could result in savings due to reductions in development and testing time and costs.

An EPA demonstration program was undertaken at an Anaheim, California industrial petroleum dry cleaning facility (Lutz et al., 1980) to evaluate the performance of carbon adsorption as a means of reducing VOC emissions from a standard petroleum solvent dryer (see Appendix A, Test 7). An adsorption system with two carbon vessels was connected to the exhaust of a 180 kg (400 lb) capacity standard dryer, and the VOC concentrations at the adsorber inlet and exhaust were monitored throughout the course

Table 3-1. MODEL PLANT PARAMETERS
(Control Equiment)

Model plant	Model plant I	Model plant II
Number of existing plants nationwide in 1979	60	170
Annual plant throughput, in kg (lbs)	182,000 (400,000)	635,000 (1,400,000)
Throughput description	industrial articles	industrial articles
Number of washers	1	2
Washer capacity (each), kg (lbs)	115 (250)	225 (500)
Number of recovery dryers	3	8
Dryers capacity (each), kg (lbs)	48 (105)	48 (105)
Filtration options		
cartridge filter, number of cartridges	63	0
settling tanks, number per plant	1	1
Total vacuum still capacity L/hr (gal/hr)	1,900 (500)	5,700 (1,500)
Number of loads dried per day	20	50
Average load weight per dryer kg (lbs)	35 (80)	48 (105)
Days of operation per year	260	260
Wash cycle time, minutes	40	40
Dry cycle time, minutes	40	40
Average or range of baseline emissions per plant, megagrams VOC/year (tons VOC/year)	13.7-15.5 (15-17)	47.7 (52.5)
Average or range of baseline emissions nationwide, megagrams VOC/year (tons VOC/year)	819-930 (900-1,020)	8,100 (8,905)

of normal daily operations in which approximately 1,600 kg (3,500 lbs) of general apparel was cleaned. Results of the test program indicated that the average difference in VOC concentrations between the adsorber inlet/dryer exhaust (2,100 ppm as solvent) and outlet (100 ppm as solvent) over the duration of typical drying cycles represented an overall reduction in VOC concentration of 95 percent.

A comparative analysis of the overall potential for reducing dryer VOC emissions from the carbon adsorber and the recovery dryer indicates that the carbon adsorber produces approximately the same amount of VOC emissions as to the recovery dryer. And, although the adsorber unit produces a 95 percent reduction in the VOC concentration emitted to the atmosphere, the solvent recovery efficiency has been limited to approximately 75 percent, thereby indicating that the savings resulting from solvent recovery would be lower with the carbon adsorber. The discrepancy between the recovery and emission reduction efficiency has been found to be caused by vapor leaks in duct work before the carbon beds. Therefore, the actual amount of recovered solvent is less than the removal efficiency across the beds. This variation between emissions and recovery, together with the high capital costs of the adsorber system, results in the adsorber's being considered less desirable than the recovery dryer as a VOC emissions control technique.

3.8 REFERENCES FOR CHAPTER 3

Ashland Chemical Co. 1977. Material Safety Data Sheet No. 0000585-001. Environmental and Occupational Safety Department. Ashland, Kentucky.

Bee, W. and W. Fisher. 1976. Report on Cartridge Filtration Life. International Fabricare Institute (IFI). Joliet, Illinois. Focus No. 1.

Corey, Q. 1981. TRW Inc., Letter to S. Shedd, EPA/CPB, February 10. Summary of insurance underwriters' and fire marshals' views on the solvent recovery dryer.

EPA. 1980. Perchloroethylene Dry Cleaners - Background Information for Proposed Standards. OAQPS. Research Triangle Park, North Carolina. Publication No. 450/3-79-029a.

Factory Mutual System, 1981. Approval Guide for Equipment, Materials, and Services for Conservation of Property. Norwood, Massachusetts.

Fisher, W. 1975. ABC's of Solvent Mileage, Part 1. International Fabricare Institute (IFI). Joliet, Illinois. Special Reporter Vol. 3, No. 4. July-August.

Fisher, W. 1980. International Fabricare Institute (IFI), Meeting with S. Plaisance, TRW Inc., December 9. Number of dry cleaning plants using cartridge filters.

Hoyt Manufacturing, Inc. 1979. Sales Brochure: The "Petro-Miser" 105. Westport, Massachusetts.

Jernigan, R. 1981. A report on the design, safety and performance of Japanese recovery dryers. TRW Inc., Research Triangle Park, North Carolina (EPA Contract No. 68-03-2560).

Jernigan, R. and J. Kezerle. 1980. Evaluation of the Potential for Reduction of Solvent Losses Through a Washex Petroleum Vacuum Still Sump. TRW Inc. Research Triangle Park, North Carolina (EPA/IERL Contract No. 68-03-2560, Task No. T5013).

Jernigan, R. and S. Lutz. 1979. An Evaluation of the Emission Reduction Potential of a Solvent Recovery Dry Cleaning Dryer. TRW Inc. Research Triangle Park, North Carolina (EPA Contract No. 68-03-2560).

Jernigan, R., G. May, and S. Plaisance. 1981. An Evaluation of the Emission Reduction Performance of a Solvent Recovery Dry Cleaning Dryer Under Varying Conditions of Condenser Water Temperature. TRW Inc. Research Triangle Park, North Carolina (EPA Contract No. 68-02-3063).

Kennes, F. 1981. Factory Mutual System, Telecon with S. Plaisance, TRW Inc., February 11. Basis for Factory Mutual approval of the recovery dryer.

Los Angeles Fire Department. 1981. General Approval of Hoyt Petro-Miser. L.A.F.D. No. 12/81/1. Los Angeles, California.

Lutz, S., S. Mulligan and A. Nunn. 1980. Demonstration of Carbon Adsorption Technology for Petroleum Dry Cleaning Plants. Cincinnati, Ohio. EPA Publication No. 600/2-80-135.

NID. 1971. Estimation of Solvent Vapor Emission from Petroleum Dry Cleaning Plants. IFI. Joliet, Illinois. Technical Bulletin No. T-468.

Plaisance, S. 1981. A Study of Petroleum Dry Cleaning Cartridge Filter Element Emissions. TRW, Inc. Research Triangle Park, North Carolina (EPA Contract No. 68-02-3063).

Plaisance, S., J. Jernigan, G. May, and C. Chatlynne. 1981. TRW Inc. Evaluation of Petroleum Solvent Concentrations, Emissions, and Recovery in a Solvent Recovery Dryer (EPA Contract No. 68-02-3063).

Puritan. 1980. Sales Brochure: Modern Filtration Means Puritan Filtration. R. R. Street and Company. Oakbrook, Illinois. Bulletin No. 1289.

Washex. 1973. Installation, Operation and Maintenance Manual for Washex Vacuum Stills. Publication No. T-513d. Wichita Falls, Texas. July.

Vanderver, 1982. Patton, Boggs, and Blow. Letter to F. Porter, EPA/ESED, January 15. Summary of dry cleaning industry comments on the November, 1981, Draft CTG for Large Petroleum Dry Cleaners.

4. ENVIRONMENTAL ANALYSIS OF RACT

The installation of RACT equipment and the implementation of RACT procedures in a typical dry cleaning plant involve the replacement of existing dryers with recovery dryers, the replacement of existing diatomite filtration systems with a cartridge filtration system, and improved operating and maintenance procedures to identify and repair liquid and vapor leaks.

The environmental impacts of RACT implementation on air, water, and solid-waste disposal are discussed in this section. In addition, the effects of RACT equipment operation on overall energy consumption are detailed, based on the two model plants that were discussed in Chapter 2, and these values are compared with those of uncontrolled model plants. Finally, beneficial and adverse effects from the installation of RACT equipment are assessed in relation to emissions and energy consumption in these model plants.

4.1 AIR POLLUTION

Table 4-1 lists the estimated uncontrolled VOC emissions for each emission point and indicates the range (or nominal value) of controlled emissions per 100 kg of articles cleaned. Because the uncontrolled dryer provides from 60 to 80 percent of the total emissions, effective control and reduction (81 percent) of VOC emissions from this source provides the greatest direct impact on overall plant emissions.

Filtration system VOC emissions in dry cleaning facilities with existing non-RACT diatomite filters account for about 25 percent of the total uncontrolled emissions. Filtration emissions in these facilities will be reduced by as much as 88 percent as a direct result of cartridge filter installation. However, RACT will provide no reduction in filtration system VOC emissions in facilities that have existing settling tanks or

Table 4-1. NOMINAL EMISSIONS FACTORS FOR EXISTING AND RACT EQUIPMENT (in kg VOC emitted per 100 kg dry weight of articles cleaned)

Source	Existing equipment emissions	RACT equipment emissions	VOC emission reduction	Percent reduction
Dryer	18	3.5	14.5	81
Filter				
Diatomite	8	1	7	88
Cartridge	1	1	0	0
Still	3	3	0	0
Fugitive sources	1	1	b	b
Total	22-30	7.5-8.5	14.5-21.5	

[a]Existing equipment emission estimates are based on industry association data and EPA plant tests, and represent approximate midrange for most sources. See Section 2.0 for complete explanations of controlled emissions sources and levels.

[b]Indeterminate quantity.

cartridge filters. In addition, the VOC emissions resulting from fugitive sources could be directly reduced by improvements in maintenance and operating procedures. Thus, RACT equipment and procedures would produce average VOC emissions reductions ranging from 66 to 72 percent.

Table 4-2 illustrates the VOC emissions reductions that result from the installation of RACT equipment and the adoption of RACT operating and maintenance procedures in two model plants. Based on three uncontrolled emissions rates representing the three filtration alternatives in model plant I and two RACT emissions rates, the model plants show a 66 to 70 percent reduction in model plant I and a 66 percent reduction in VOC emissions in the model plant II. The specific reductions in VOC emissions range from 26 Mg to 39 Mg per year in a model plant I and approximately 92 Mg per year in a large model plant.

4.2 WATER POLLUTION

Increases in water pollution, due to RACT implementation in petroleum dry cleaning plants, would result primarily from inefficient separation of condensed solvent and water. Recovery dryers employ gravimetric separators to remove water from the reclaimed solvent. This unit uses the difference in density between petroleum solvent and water to separate and divert them. Typically, water collected in this manner is dumped into a sewer. The leveling of the separator is critical to the optimization of its performance. If it is not level at installation or is bumped during maintenance, the quantity of solvent in the sewered water could increase to the point of becoming a significant source of water pollution.

Insufficient drainage of RACT filter cartridges could prove to be a source of groundwater pollution, especially if the cartridges were buried in an improperly located or maintained landfill or dump. RACT procedures for cartridge drainage would decrease the overall volume of solvent exposed to groundwater and would, therefore, reduce water pollution by petroleum solvent. Furthermore, based on a maximum solubility of 100 kg (Saary, 1981) of petroleum solvent in 1,000,000 kg of recovered water and an average recovery dryer water recovery rate of 3.4 kg water per 100 kg of articles dried (Plaisance et al., 1981),

Table 4-2. NOMINAL ANNUAL VOC EMISSIONS FOR TWO MODEL PLANTS EMPLOYING EXISTING AND RACT EQUIPMENT AND PROCEDURES

Type of plant	Plant throughput, kg/yr (lb/yr)	Nominal emission factors in kg VOC emitted per 100 kg dry weight of articles cleaned		Nominal VOC emissions, megagrams/yr (tons/yr)		Nominal annual VOC emission reductions resulting from RACT implementation, megagrams/yr (tons/yr)
		Existing equipment	RACT equipment	Existing equipment	RACT equipment	
Model plant I	182,000 (400,000)					
with existing:						
Diatomite filter		30	8.5	55 (60)	16 (17)	39 (43)
Cartridge filter		23	8.5	42 (46)	16 (17)	26 (29)
Settling tank		22	7.5	41 (45)	14 (15)	27 (30)
Model plant II	635,000 (1,400,000)	22	7.5	140 (154)	48 (53)	92 (101)

model plant I and model plant II would lose about 0.5 kg and 1.5 kg per year, respectively, from solvent dissolved in the recovered water.

4.3 SOLID-WASTE DISPOSAL

Implementation of RACT in existing petroleum dry cleaning facilities would result in a net reduction in both the mass and solvent content of solid wastes. Installation of RACT cartridge filters would produce a dramatic decrease in emissions from solid wastes in petroleum dry cleaning plants. Cartridge filters, when compared with diatomite filters, have been shown to reduce solvent content of disposed filter wastes by 80 to 90 percent (Plaisance, 1981), thereby decreasing the overall quantity of solvent-laden solids introduced to the environment. In addition, the replacement of diatomite with cartridge filters will reduce the mass of solid waste generated by 60 percent, based on an average industry estimate of 3.57 kg of waste generated per 100 kg of throughput with a diatomite filter (Fisher, 1975) and 1.47 kg solid waste per 100 kg of throughput for a cartridge filter (Plaisance, 1981).

4.4 ENERGY

Energy savings result from the implementation of RACT guidelines in both model plants. With the installation of RACT recovery dryers and cartridge filters in the model plants, annual expenditures for both steam and electricity are reduced by a combined average of 70 percent over utility costs for existing standard dryers and diatomite filters (see Section 5.2 and 5.3).

The energy value of recovered solvent is included in the overall analysis of petroleum dry cleaning plant energy consumption. One approach to this analysis that would be meaningful to the dry cleaning industry is to assume that all recovered solvent is resold at its current market value ($0.53 per kg) and that the proceeds are used to purchase electricity at its current market value of $0.0603 per kilowatt-hour (Vatavuk, 1980). This approach to energy conservation by solvent recovery illustrates a savings of energy accrued directly to the individual petroleum dry cleaning plant.

Table 4-3 delineates the impact of RACT implementation on model plant energy consumption per year based on the previously discussed

Table 4-3. ENERGY IMPACT OF EXISTING AND RACT EQUIPMENT[a]
(in Gigajoules per year)

Model plant	Existing equipment	RACT equipment	Percent reduction
Model plant I	1,865	(660)[b]	135
Model plant II	6,070	(1,040)	120

[a]Based on 0.00314 GJ/kg steam and 0.0036 GJ/kWh electricity (Baumeister et al., 1978), and utility consumption and solvent recovery values calculated in Chapter 5.

[b]Numbers in parenthesis represent overall energy savings, based on savings from solvent recovery (at $0.53 per kg) to purchase electricity at a cost of $0.0603 per kWh.

approach. Considerable energy savings (over 140 percent for both model plants) arise from the installation of RACT equipment. A maximum annual energy savings of 6,260 GJ takes place in the model plant II, where solvent recovery in the dryers is optimized by the plant's high throughput without the additional solvent recovery due to the installation of cartridge filters. Model plant I shows an annual energy savings of 2,460 GJ, due to the combined effects of solvent recovery on energy consumption.

4.5 REFERENCES FOR CHAPTER 4

Chevron Oil Co., 1980. Sales Brochure: Chevron Thinners and Solvents. EL Segundo, California.

Fisher, W. 1975. ABC's of Solvent Mileage, Part 1. International Fabricare Institute. Joliet, Illinois. IFI Special Report Vol. 3, No. 4.

Baumeister, T., E. Avallone, and T. Baumeister, III. 1978. Marks' Standard Handbook for Mechanical Engineers. McGraw-Hill. New York, New York.

Plaisance, S. 1981. A Study of Solvent Drainage and Retention in Discarded Petroleum Dry Cleaning Cartridge Filter Elements. TRW Inc., Research Triangle Park, North Carolina (EPA Contract No. 68-02-3063).

Plaisance, S., J. Jernigan, G. May, and C. Chatlynne. 1981. TRW Inc. Evaluation of petroleum solvent concentrations, emissions, and recovery in a solvent recovery dryer (EPA Contract No. 68-02-3063).

Saary, Z. 1981. Chevron Research Laboratory, Telecon with S. Plaisance, TRW Inc., July 20. Maximum solubility of Chevron petroleum solvent in water.

Vatavuk, W. 1980. Factors for Developing CTG Costs. Cost and Energy Analysis Section, Economic Analysis Branch. EPA/OAQPS. Research Triangle Park, North Carolina (Draft Document).

5. CONTROL COST ANALYSIS OF RACT

5.1 BASIS FOR CAPITAL COSTS

Estimated capital costs of RACT implementation are based on equipment suppliers' prices, as well as on EPA cost factors for taxes, freight, instrumentation, and installation (Vatavuk, 1980). All cost estimates are based on June 1980 prices and values.

Equipment costs are taken from manufacturers or suppliers and include all major equipment (see Table 5-1 for a summary of existing and RACT equipment costs). It is assumed that recovery dryer condenser cooling water will be supplied by refrigerated chillers, and the costs of these units are included in the capital costs of RACT equipment. This represents a worst-case situation, because some facilities might require no additional water cooling equipment while others might require only an evaporative cooling tower at an average of 40 percent of the cost of a refrigerated chiller.

Taxes, freight, and instrumentation are lumped together as 18 percent of the equipment costs (Vatavuk, 1980). While this factor may be excessive for a simple, unitized device such as a recovery dryer or cartridge filter, variations in shipping distance, method of transportation, and local taxes could increase this portion of the capital costs beyond this percentage.

Installation (retrofit) costs are estimated on the basis that all RACT-associated equipment will be installed by maintenance personnel at a cost of 5 percent of the equipment cost, or by an outside contractor at 10 percent of the equipment cost. The difference between these cost factors is related to the availability of qualified maintenance personnel. For the purpose of cost estimation, a factor of 7.5 percent of the equipment cost has been used (Bunyard, 1980) to approximate the costs of removing existing equipment and replacing it with RACT equipment.

Table 5-1. EQUIPMENT COSTS IN TWO MODEL PLANTS
(Costs in thousands of June 1980 dollars)

Equipment	Model plant I	Model plant II
Existing Equipment		
Standard dryer	15.16[a]	68.00[b]
Diatomite filter	8.4 [c]	--[d]
RACT Equipment		
Recovery dryer	44.94[e]	119.84[e]
Cooling tower	2.18[f]	4.36[f]
Refrigerated chiller	7.00[g]	14.00[g]
Cartridge filter	9.0 [h]	--[d]

[a]Gardner, 1980.

[b]Moles, 1980.

[c]Kelly, 1980.

[d]Not applicable.

[e]Methe, 1980.

[f]Adams, 1980.

[g]Chaffee, 1981.

[h]Kirk, 1980.

5.2 BASIS FOR ANNUALIZED COSTS

Annualized operating costs are the sum of operating costs and capital charges. Operating costs include utilities, operating labor, and maintenance (labor and materials). Capital charges include capital recovery, as well as taxes, insurance, and administration. Credits for the value of recovered solvent are included in the total annual operating costs (Neveril, 1978).

Primary utilities included under annual operating costs are steam and electricity. Annual steam costs are based on equipment manufacturers' estimates of steam demand (in boiler horsepower or weight of steam per hour), estimates of operating hours as a function of model plant throughput, and a cost of steam (in dollars per kilogram generated) derived from current fuel cost estimates (Vatavuk, 1980) (see Table 5-2, Equation 1). Electrical requirements are derived from manufacturers' electrical demand specifications (usually in motor horsepower), operating time estimates as a function of model plant throughput, and a national average cost of electricity (in dollars per kWh) for commercial customers (Vatavuk, 1980). An operating efficiency of 60 percent is assumed for electric motors (Neveril, 1978) (see Equation 2) and electrical demand from refrigerated chillers is assumed to remain constant over the same duration as that of steam (6 hours per day).

Operating labor cost estimates are derived from national statistics for average hourly wages in the "Wholesale and Retail Trade Category" with the addition of 56 percent for payroll and plant overhead (Vatavuk, 1980). A work time of 1 worker-hour of operating labor per dryer per day (see Equation 3) is assumed (Jernigan and Lutz, 1979).

Estimated annual maintenance costs include both labor and materials. Maintenance labor costs are calculated from hourly rates that include a 26 percent plant overhead factor, with hours based on field test and plant survey data (Vatavuk, 1980). Maintenance materials costs are determined as 100 percent of annual maintenance labor costs (see Equation 4) in the absence of exact materials cost data (Vatavuk, 1980). If materials cost data are available, maintenance costs are represented as twice the cost of labor or materials, whichever is higher.

Table 5-2. COST EQUATIONS

Equation 1: STEAM

$$= \frac{\text{boiler}}{\text{hp}} \times \frac{34.5 \text{ lbs steam/hr}}{\text{boiler hp}} \times \frac{\text{operating days}}{\text{yr}} \times \frac{\text{operating hrs}}{\text{day}} \times \frac{\text{cost}}{\text{lb steam}}$$

- Steam demand assumed continuous over a 6 hour day.
- Steam cost per kg (pound) = $0.02 ($0.009).
- 260 Operating days per year.
- 34.5 lbs steam per hour per boiler horsepower is a constant of conversion (Babcock, 1978).

Equation 2: ELECTRICITY

$$= \frac{\text{motor}}{\text{hp}} \times \frac{0.746 \text{ kW}}{\text{hp}} \times \frac{1}{60\% \text{ efficiency}} \times \frac{\text{operating hrs}}{\text{day}} \times \frac{\text{operating days}}{\text{yr}} \times \frac{\text{cost}}{\text{kWh}}$$

- Assuming lower value of typical motor efficiency range of 60% to 70%.
- Operating hours per day based on model plant dry-cycle time per load and number of loads per day.
- Operating days per year same as steam (see above).
- Electricity cost per kWh = $0.06.
- 0.746 kW per horsepower is a constant of conversion (Babcock, 1978).

Equation 3: OPERATING LABOR

$$= \frac{1 \text{ worker-hr operating labor}}{\text{dryer-day}} \times \frac{\text{operating days}}{\text{yr}} \times \frac{\text{dryers}}{\text{plant}} \times \frac{\text{labor cost}}{\text{worker-hr}}$$

- Operating days per year same as steam (see above).
- Labor cost per worker-hour = $8.42.

(continued)

Table 5-2. Concluded

Equation 4: ANNUAL MAINTENANCE

$$= \frac{1 \text{ worker-hr}}{\text{dryer-week}} \times \frac{\text{operating days per yr}}{\text{5 days per week}} \times \frac{\text{dryers}}{\text{plant}} \times \frac{\text{maintenance labor cost}}{\text{worker-hr}} \times \text{2.0 materials supplement}$$

- Maintenance labor cost per worker-hour = $8.30.
- Maintenance labor and materials costs are equal (based on computed costs of hourly labor or required materials, whichever is greater).

Equation 5: TAXES, INSURANCE, AND ADMINISTRATION

$$= (0.04) \times (\text{total capital cost})$$

Equation 6: CAPITAL RECOVERY FACTOR

$$= \frac{i(1 + i)^n}{(1 + i)^n - 1} \times (\text{total capital cost})$$

- Assuming interest rate i = 10%.
- Assuming equipment life n = 30 yrs.

Equation 7: RECOVERED SOLVENT VALUE (CREDIT)

$$= \text{total emission reduction in kg VOC/kg throughput} \times \frac{\text{kg throughput}}{\text{yr}} \times \frac{\$0.53}{\text{kg}}$$

- Assuming 84% reduction of total uncontrolled emissions for the recovery dryer (15.2 kg VOC per 100 kg dry weight articles cleaned).
- Assuming 88% reduction of total uncontrolled emissions for the cartridge filter (7 kg VOC per 100 kg dry weight of articles cleaned).
- Average solvent cost = $0.53/kg ($1.55 gallon).

Capital costs resulting from property taxes and insurance costs are each estimated as 1 percent of the total annual capital costs, and administration costs are 2 percent of total annual capital costs (see Equation 5) (Neveril, 1978). The capital recovery cost is based on an annual interest rate of 10 percent (Vatavuk, 1980) and a projected life of 30 years (see Equation 6) for the dry cleaning equipment. In the case of existing equipment, it is assumed that the equipment has been paid off. Therefore, there are no capital recovery charges for existing equipment.

Annual credits for recovered solvent are based on experimentally determined solvent recovery efficiencies for RACT equipment. For example, the emission reduction resulting from the installation of RACT equipment in model plant I with a diatomite filter is the difference between the existing emission rate of 30 kilograms of VOC emitted per 100 kilograms dry weight of articles cleaned and the RACT equipment emission level of 5.8 kilograms of VOC per 100 kilograms dry weight of articles cleaned with a cartridge filter. Furthermore, it is assumed that a specified percentage of the 30 kilograms of VOC (solvent) per 100 kilograms dry weight of articles cleaned is recovered in a reusable form (Jernigan and Lutz, 1979). Solvent costs are taken from industry quotations, the average being $1.55 per gallon (see Equation 7) (Carson, 1980). The difference from existing control costs is computed as the difference in total annual operating costs between existing and RACT equipment.

5.3 EMISSION CONTROL COSTS

The costs of RACT implementation in the two model plants are based on the installation and operation of recovery dryers (and their associated refrigerated chillers) and a cartridge filtration system where a diatomite filter is in use. Tables 5-3 and 5-4 summarize the results of applying the previously defined cost equations to two model plants with both existing and RACT equipment, based on the worst-case assumption of an existing diatomite filter in model plant I. These tables also show the cost of RACT implementation with existing cartridge filters and settling tanks.

Table 5-3. CAPITAL AND ANNUALIZED COSTS OF EXISTING EQUIPMENT IN TWO MODEL PLANTS
(Costs are in thousands of June 1980 dollars)

Cost parameters	Model plant I[a] (182,000 kg/yr)[c]	Model plant II[b] (635,000 kg/yr)[c]
Capital costs		
Equipment	31.96	68.00
Taxes, freight, and instrumentation	5.75	12.24
Direct and indirect installation	2.82	6.02
Total capital costs	40.53	86.26
Annualized costs		
Operating costs		
Steam	11.65	35.92
Electricity	0.60	7.20
Operating labor	9.15	5.00
Annual maintenance (labor and materials)	6.67	2.00
Subtotal, direct costs	28.16	50.12
Capital charges		
Capital recovery	0	0
Administration taxes, and insurance	1.62	3.45
Subtotal, indirect costs	1.62	3.45
Recovered solvent value (credit)	0	0
Total annualized cost	29.76	53.57
Total annualized cost with existing cartridge filters instead of diatomite filters	20.38	d
Total annualized cost with existing settling tank instead of diatomite filter	21.86	d

[a]Tabulated costs for model plant I are based on an existing diatomite filter.

[b]Tabulated costs for model plant II are based on an existing settling tank.

[c]Annual kilograms of articles cleaned.

[d]Not applicable.

Table 5-4. CAPITAL AND ANNUALIZED COSTS OF RACT EQUIPMENT IN TWO MODEL PLANTS (Costs are in thousands of June 1980 dollars)

Cost parameters	Model plant I[a] (182,000 kg/yr)[c]	Model plant II[b] (635,000 kg/yr)[c]
Capital costs		
Equipment	60.94	133.84
Taxes, freight, and instrumentation	10.97	24.09
Direct and indirect installation	5.40	11.85
Total capital costs	77.31	169.78
Annualized costs		
Operating costs		
Steam	3.16	10.10
Electricity	1.52	5.08
Operating labor	6.40	20.20
Annual maintenance (labor and materials)	7.23	7.96
Subtotal, direct costs	18.31	43.34
Capital charges		
Capital recovery	8.20	18.01
Administration taxes, and insurance	3.10	6.79
Subtotal, indirect costs	11.30	24.80
Recovered solvent value	(20.74)	(48.80)
Total annualized cost	8.87	19.34
Difference from existing equipment annual costs	(20.89)	(34.23)
Total annualized cost with existing cartridge filters	9.16	d
Difference from existing equipment annual costs	(11.22)	d
Total annualized cost with existing settling tank	9.15	d
Difference from existing equipment annual costs	(12.71)	d

[a]Tabulated costs for model plant I are based on replacing an existing diatomite filter with a cartridge filter.

[b]Tabulated costs for model plant II are based on an existing settling tank.

[c]Annual kilograms of articles cleaned.

[d]Not applicable.

While installed capital costs of RACT equipment range from $77,000 to $170,000, the cost credits gained from the value of recovered solvent result in total annualized costs ranging from $8,870 (model plant I with an existing diatomite filter) to $19,340 (model plant II).

The installation of RACT equipment in a model I plant is based on the operation of three 48 kg (105 lb) capacity recovery dryers and (where applicable) a cartridge filtration system, instead of three standard dryers of the same capacity with diatomite filters. While operating costs are reduced by the recovery dryer's lower demand for steam and the cartridge filter's reduced materials and labor outlays, gross annual capital charges are substantial due to the effects of high capital costs. Total annualized costs for model plant I with existing diatomite filters are reduced by 70 percent as a result of credits for recovered solvent, and model I plants with both existing cartridge filters and settling tanks have annualized cost reductions of about 60 percent.

Two 180 kg (400 lb) capacity standard dryers used in model II plants are replaced by eight RACT recovery dryers at a capital cost of approximately $170,000. The annual cost of steam is significantly lower for recovery dryers, but their labor and maintenance costs are higher than those of existing equipment, with eight dryers requiring more operator and maintenance time. High annual capital charges associated with RACT equipment are offset by substantial cost reductions from recovered solvent credits. Thus, the installation of RACT equipment (recovery dryers) in a model plant II yields a 64 percent reduction in total annualized costs when compared with standard dryer annualized costs.

5.4 COST EFFECTIVENESS

The cost effectiveness of RACT equipment installation and operation is defined as the annual dollars expended beyond the costs of existing equipment per unit mass of emission reduction achieved. A combination of high emission reduction and low annual cost (high annual credit) results in maximum cost effectiveness.

The cost effectiveness of existing and RACT equipment in two model plants is tabulated in Table 5-5. The actual annualized cost of recovery dryers ranges from about $9,000 per year in a model plant I (three recovery dryers with refrigerated chillers) to about $19,000 per year in a model plant II(eight recovery dryers with refrigerated chillers). Based on standard dryer annualized operating costs of about $21,900 per year in a model plant I (three 45 kg capacity dryers) and about $53,600 per year in a model plant II (two 225 kg capacity dryers), the difference in annualized costs resulting from recovery dryer operation in model I and II plants would be savings of about $12,700 and $34,000, respectively. Similarly, standard dryer VOC emissions in model I and II plants of about 32.8 and 114.3 megagrams VOC per year would be reduced by about 26.4 and 92 megagrams VOC per year, respectively, based on the recovery dryer emissions of 6.4 and 22 megagrams VOC per year in model I and II plants. Thus, the cost effectiveness of recovery dryers in model I and II plants would be a savings of $480 and $370, respectively, per megagram of VOC emission reduction.

The replacement of diatomite filters with cartridge filters in a model plant I (model II plants use only settling tanks) would result in a reduction in annualized costs of about $8,200, based on annualized operating costs of about $7,900 per year for diatomite filters (two 11,400 L/hr filters) and an actual savings in annualized costs of about $300 per year for cartridge filters (63 cartridge elements). Similarly, the 14.6 megagram annual VOC emisions from diatomite filters would be reduced to about 1.9 megagrams VOC per year with the installation of cartridge filters, resulting in a filtration emission reduction of about 12.7 megagrams VOC per year. Thus, the cost effectiveness of replacing existing diatomite filters with cartridge filters in a model I plant would be a savings of about $640 per megagram of VOC emission reduction.

The cost effectiveness of RACT implementation in two model plants is summarized in Table 5-6, which also includes cost effectiveness data for facilities with existing cartridge filters as well as those with existing solvent settling tanks.

Table 5-5. COST EFFECTIVENESS OF EXISTING AND RACT EQUIPMENT IN TWO MODEL PLANTS (costs are in thousands of June 1980 dollars)

Equipment	Model plant I (182,000 Kg/yr)			Model plant II (635,000 Kg/yr)		
	Emission reduction (Mg VOC/yr)	Annualized cost ($\$10^3$/yr)	Cost effectiveness ($\$10^3$/Mg VOC)	Emission reduction (Mg VOC/yr)	Annualized cost ($\$10^3$/yr)	Cost effectiveness ($\$10^3$/Mg VOC)
Standard dryer	0	21.86	c	0	53.57	c
Recovery dryer (with refrigerated chiller)	26.39	(12.71)[a]	(0.48)[b]	92.08	(34.23)[a]	(0.37)[b]
Diatomite filter	0	7.92	c	c	c	c
Cartridge filter	12.74	(8.19)[a]	(0.64)[b]	c	c	c

[a]Annualized cost values tabulated for control equipment (recovery dryers or cartridge filters) are actually the difference between existing equipment (standard dryer or diatomite filter) annualized cost and the actual annualized cost for the particular item of control equipment.

[b]Numbers in parenthesis represent thousands of dollars saved.

[c]Not applicable.

Table 5-6. COST EFFECTIVENESS OF RACT IMPLEMENTATION IN TWO MODEL PLANTS (costs are in thousands of June 1980 dollars)

Cost parameters	Model plant I[a] (182,000 kg/yr)[c]	Model plant II[b] (635,000 kg/yr)[c]
Emission reduction (Mg VOC/yr)	39.13	92.08
Annualized RACT cost savings relative to existing equipment	20.89	34.23
Cost effectiveness of RACT implementation (dollars saved/Mg of VOC emission reduction)	0.53	0.37
Cost effectiveness of RACT implementation in plants with existing cartridge filters in $ saved/Mg VOC	0.43	d
Cost effectiveness of RACT implementation in plants with existing settling tank in $ saved/Mg VOC	0.48	d

[a]Tabulated cost effectiveness for a model I plant is based on an existing diatomite filter.

[b]Tabulated cost effectiveness for a model II plant is based on an existing settling tank.

[c]Annual kilograms of articles cleaned.

[d]Not applicable.

The replacement of existing equipment (standard dryer and diatomite filter) with RACT equipment in a model I plant would result in an annual cost effectiveness of $530 saved per megagram of emission reduction. This cost effectiveness includes the burden of high capital costs resulting from the installation of three recovery dryers and one cartridge filter. The owner of a model I plant could expect to save about $21,000 per year by replacing existing equipment with RACT equipment, while reducing the annual VOC emissions from the plant by approximately 40 megagrams. In model I plants with existing cartridge filters, the annual cost effectiveness of RACT implementation would be $430 saved per megagram, and that of model I plants with existing settling tanks would be $480 saved per megagram of VOC emission reduction.

The cost effectiveness of replacing existing equipment with RACT equipment in a model II plant yields an annual savings of $370 per megagram of VOC emission reduction. Unlike the model I plant, the model II facility has only a settling tank for filtration and there are no additional savings from solvent recovery by installation of cartridge filters. Therefore, the owner of a large industrial plant could expect to save $34,000 per year after installing RACT recovery dryers, while experiencing a 92 megagram reduction in annual VOC emissions.

5.5 REFERENCES FOR CHAPTER 5

Adams, E. 1980. Adams Chet Co., Telecon with S. Plaisance, TRW Inc., June 13. Cost of 25 ton cooling tower.

Babcock and Wilcox. 1978. Steam: Its Generation and Use. Babcock and Wilcox. New York, N.Y.

Bunyard, F. 1980. EPA/EAB, Telecon with S. Plaisance, TRW Inc., November 24. Cost factor for equipment installation.

Carson, J. 1980. Ashland Chemical Company, Telecon with S. Plaisance, TRW Inc., September 15. Price of Ashland petroleum solvent.

Chaffee, T. 1981. Rite-Temp, Inc., Telecon with S. Plaisance, TRW Inc., January 9. Cost of refrigerated chillers.

Gardner, J. 1980. Gardner Machinery, Inc., Telecon with S. Plaisance, TRW Inc., June 9. Cost of 50 and 110 pound capacity Cissell dryers.

Jernigan, R. and S. Lutz. 1979. Evaluation of the Emission Reduction Potential of a Solvent Recovery Dry Cleaning Dryer. TRW Inc. Research Triangle Park, North Carolina (EPA Contract No. 68-03-2560, Task No. T5013).

Kelly, R. 1980. Chem-San International, Inc., Telecon with S. Plaisance, TRW Inc., October 17. Cost of 1,500 gph Chem-San diatomite filter.

Kirk, R. 1980. Boggs Equipment Inc., Telecon with S. Plaisance, TRW Inc., October 17. Cost of Puritan cartridge filter systems.

Methe, A. 1980. Hoyt Manufacturing Inc., Telecon with S. Plaisance, TRW Inc., June 11. Cost of 50 and 105 pound capacity Hoyt recovery dryers.

Moles, E. 1980. Challenge-Cook Brothers, Inc., Telecon with S. Plaisance, TRW Inc., June 16. Cost of 400 pound capacity dryer.

Neveril, R. 1978. Capital and Operating Costs of Selected Air Pollution Control Systems. EPA Publication No. 450/5-80-002. EPA/OAQPS. Research Triangle Park, North Carolina.

Vatavuk, W. 1980. Factors for Developing CTG Costs. Cost and Energy Analysis Section, Economic Analysis Branch (EAB), OAQPS. Research Triangle Park, North Carolina (Draft Report).

APPENDIX A
SUMMARY OF FIELD TESTS

APPENDIX A
SUMMARY OF FIELD TESTS

This appendix provides detailed descriptions of EPA tests conducted in support of petroleum dry cleaning new source performance standard (NSPS) and control techniques guideline (CTG) development.

A.1 TEST 1 (PICO RIVERA)

EPA contracted an engineering analysis of a solvent recovery dryer to determine its emission reduction potential and establish the capital and operating costs associated with its use (Lutz and Jernigan, 1980). The test site for this program was an industrial petroleum dry cleaning plant located in Pico Rivera, California. Testing was conducted at the plant from October 9 to November 21, 1979. This dry cleaning facility utilized both a Cissell standard dryer and a Hoyt "Petro-miser" solvent recovery dryer to process approximately 6,350 kg (14,000 lbs) of industrial work gloves per week. The standard dryer had a dry weight load capacity of 45 kg (100 lbs), and the recovery dryer had a dry weight load capacity of 48 kg (105 lbs). To reflect normal operating conditions, each dryer was loaded an average of 10 percent over its rated capacity with work gloves made of cotton and leather. The recovery dryer had three operating sequences – a Reclaim-Dry Cycle, a Perma-Cool Cycle, and a Deodorizing (exhaust) Cycle. Solvent emissions from the recovery dryer were not restricted solely to the exhaust cycle. Any time the dryer loading door was open, an exhaust fan was activated and ambient room air was pulled into the dryer and exhausted to the atmosphere via the exhaust duct. This also occurred when the door to the lint filter compartment was open. In comparison, the standard dryer continuously exhausted to the atmosphere during the dryer cycle.

The solvent recovery dryer's emission reduction performance was established by comparing its measured emission rate with the emission rate of a standard dryer. During the testing period, both dryers were operated simultaneously and processed similar loads. The average flow rate through the exhaust ducts during the recovery and standard dryer drying cycles was determined using EPA Method 2. The average solvent concentration in the recovery and standard dryer exhausts was determined during each exhaust cycle by analyzing the strip chart recordings from a Beckman 400 flame ionization analyzer (FIA). The average concentration for each dryer, multiplied by the total gas volume throughput for each dryer, yielded the total solvent emitted for each dryer in kilograms per cycle. Dividing this value by the weight of gloves dried for each dryer cycle yielded the solvent emissions for the recovery and standard dryers expressed in kilograms of solvent per 100 kilograms of gloves dried.

The average emission rates for the recovery and standard dryers were determined and expressed in kilograms of solvent per 100 kilograms of articles cleaned. Table A-1 indicates that the recovery dryer had an average emission rate per drying cycle of 0.96 kg solvent per 100 kg dry weight of articles cleaned, and the standard dryer had an average emission rate per drying cycle of 30 kg solvent per 100 kg dry weight of articles cleaned. Recovery dryer solvent emissions per 100 kilograms of articles cleaned ranged from 0.68 to 1.25 kilograms, and appeared to vary with the load weight. The total weight of solvent recovered ranged from 8 to 17 kilograms (18 to 37 pounds) and did not appear to be a direct function of the load weight. In contrast, standard dryer solvent emissions per 100 kilograms of articles cleaned ranged from 20.8 to 47.2 kilograms, and appeared to increase with smaller load weights. The trend toward higher emissions per weight of articles cleaned in smaller loads held true for both standard and recovery dryers, and indicated that the rate at which fabrics release solvent could have a significant effect on overall solvent emissions.

The annualized operating cost of the recovery dryer was calculated to be $1,400, which represents a savings of $3,900 per year over the operating cost of the standard dryer. This savings was due primarily to the value of the recovered solvent, estimated at $0.24/liter ($0.92/gallon).

Table A-1. DRYER EMISSIONS DATA[a]

Recovery dryer							Standard Dryer				
Date	Load #	Load dry weight (kg)	Solvent emitted (kg)	kg solvent emitted/100 kg articles cleaned	Solvent recovered (kg)	kg solvent recovered/100 kg articles cleaned	Date	Run #	Load weight (kg)	Solvent emitted (kg)	kg solvent emitted/100 kg articles cleaned
10/09/79	2	51.9	0.352	0.68	14.85	28.6	10/10/79	4	50.79	15.80	31.1
10/16/79	2	50.8	0.496	0.98	11.11	21.9	10/11/79	1	53.52	13.99	26.1
10/17/79	2	49.0	0.598	1.22	11.34	23.1	10/11/79	2	51.93	14.56	28.0
10/17/79	3	51.4	0.462	0.90	11.56	22.5	10/11/79	3	49.43	17.80	36.0
10/17/79	4	53.7	0.486	0.91	9.75	17.3	10/11/79	5	52.38	16.57	31.6
10/17/79	5	43.3	0.471	0.88	11.11	20.1	10/12/79	1	50.57	14.88	29.4
10/17/79	5	53.3	0.471	0.88	11.11	20.1	10/12/79	2	48.98	16.57	33.8
10/18/79	2	56.2	0.424	0.76	8.73	15.5	10/12/79	3	51.02	15.65	30.7
10/18/79	3	51.7	0.407	0.79	11.68	22.6	10/12/79	4	54.88	11.40	20.8
10/18/79	4	49.8	0.611	1.23	14.06	28.2	10/12/79	5	48.66	18.72	38.5
10/18/79	5	49.2	0.569	1.16	8.16	16.7	10/15/79	3	52.38	16.11	30.8
10/22/79	2	52.1	0.448	0.86	11.45	22.0	10/15/79	4	50.93	15.41	32.2
10/22/79	3	46.2	0.577	1.25	16.78	36.3	10/15/79	5	46.49	21.94	47.2
10/22/79	4	48.9	0.471	0.96	14.29	29.2	10/16/79	2	50.79	15.80	31.1
							10/16/79	3	53.29	13.21	24.8
							10/17/79	1	52.38	13.56	25.9
							10/17/79	2	51.02	16.88	33.1
							10/17/79	3	52.15	12.68	24.3
							10/17/79	4	53.65	14.00	26.1
							10/19/79	1	53.51	12.12	22.7
							10/19/79	4	48.89	14.64	29.9
Average				0.96		23.4					30.1

[a]Data tabulated only for dryer loads in which all relevant parameters were successfully monitored.

The mass balance and hydrocarbon analysis from this test program demonstrated that recovery dryers could achieve a 97 percent reduction in solvent emissions as compared with a standard dryer. The economic analysis of this type of control system indicates that it is a cost-effective means of solvent emission control, providing an actual reduction in operating costs.

One problem that was not resolved during this test was whether the recovery dryer operated above the lower explosive limit (LEL) of the solvent (1 percent by volume or 10,000 parts per million). FIA chart recordings of the vapor concentrations in the recovery dryer during the reclaim-dry cycle indicated that the vapor concentration rose until it peaked at 9,000 to 9,300 parts per million (ppm) as solvent. The vapor concentration remained at this peak throughout most of the drying cycle. After the testing was completed, careful analysis of the chart recordings revealed that these peak readings were not the maximum concentration levels, but the level at which the FIA became saturated; thus, indicating only the maximum monitoring levels of the calibrated FIA. Therefore, the actual concentrations of the solvent vapors in this particular recovery dryer may have exceeded the peak range of 9,000 to 9,300 ppm.

The high vapor concentrations during the reclaim cycle may be attributed to a number of factors. Overloading of the dryers, as was the case during this test, may have caused the high concentrations. Fabric with high solvent absorption, such as cotton and leather, give off more solvent vapors than an equal weight of synthetic fabrics, thereby creating higher concentrations. Also, high condenser inlet water temperatures may contribute to high vapor concentrations during the reclaim cycle.

A.2 TEST 2 (LAKELAND)

An EPA-sponsored testing program was performed at a commercial petroleum dry cleaning facility to investigate the solvent emissions and recovery, operational costs, and safety of petroleum solvent recovery dryers (Jernigan et al., 1981). The host plant for this test program was a large commercial dry cleaning plant located in Lakeland, Florida. This facility cleaned 1,100 kg (2,500 lbs) of general apparel each week

The dry cleaning equipment consisted of a 48 kg dry weight (105 lb) capacity Hoyt recovery dryer, a 30 kg (65 lb) capacity Washex washer/extractor, an 11,000 liter per hour (3,000 gph) Washex tube filter, and a 48,000 Btu (50 MJ) Rite Temp refrigerated water chiller. Testing was conducted at this facility from July 21 to August 8, 1980.

Test procedures included monitoring exhaust gas and condenser gas inlet solvent concentrations using a Beckman 400 flame ionization analyzer (FIA). Also, temperatures of condenser inlet and outlet (water and gas) and dryer exhaust gas were monitored during this program. Chiller outlet (condenser water inlet) temperatures were increased in 5°F increments with a constant reclaim cycle duration (28 minutes), and solvent recovery rate and concentration data were recorded for several clothing loads at each of the chiller temperatures. The total recovery of both solvent and water, as well as the total flow of cooling water through the condenser during the reclaim cycle, were recorded and are listed on Table A-2.

The mass balance and hydrocarbon analysis results from this test program indicated that the average VOC emissions rate from the recovery dryer was 3.85 kg VOC per 100 kg dry weight of articles cleaned. The solvent concentration at the condenser gas inlet never exceeded 95 percent of the solvent's lower explosive limit (LEL) during the portion of the test in which the condenser water inlet temperature was varied.

Data collected during the test is summarized in Table A-2. As condenser water inlet temperatures were increased, condenser vapor outlet temperatures increased and solvent emissions per 100 kg of articles cleaned decreased. Uncontrolled theoretical solvent emissions (defined as the sum of recovered and emitted solvent) per 100 kg of articles cleaned varied from 23.73 kg to 11.59 kg, with an overall test average of 14.24 kg per 100 kg of articles cleaned. Recovery dryer emissions per 100 kg of articles cleaned, measured at the dryer exhaust by the FIA, varied from 9.45 kg to 2.34 kg, with an overall test average of 3.85 kg solvent emitted per 100 kg of articles cleaned. This relatively high emission rate may result from the typically small load weights (25 kg average) of synthetic fabrics that have a low solvent

Table A-2. RECOVERY DRYER DATA COMPILATION

Start time	Date and run	Condenser inlet water temp (°F)	Average condenser vapor outlet temp (°F)	"Dry" load weight (kg)	Recovery (kg) Water	Recovery (kg) Solvent	Solvent emitted (kg)	kg solvent emitted/100 kg articles cleaned	kg solvent recovered/ 100 kg articles cleaned
0829	8/4-2	64	87	31.29	0.010	3.21	1.16	3.71	10.26
0905	3	64	--	29.93	0.155	3.19	1.23	4.12	10.66
0941	4	64	89	26.30	0.350	2.59	1.26	4.78	9.85
1034	5	66	89	23.13	0.255	2.18	1.14	4.92	9.42
1113	6	65	89	17.23	0.245	1.52	1.02	5.95	8.82
1154	7	66	91	24.94	0.440	2.36	1.07	4.27	9.46
1240	8	65	89	39.00	0.599	4.18	1.27	3.24	10.72
1321	9	65	89	9.98	0.220	1.43	0.94	9.45	14.32
0719	8/5-2	63	88	19.95	0.315	2.25	1.04	5.20	11.28
0812	3	66	91	27.66	0.420	2.91	1.14	4.13	10.52
0856	4	68	92	30.39	0.499	3.19	1.22	4.00	10.50
0941	5	68	92	29.02	0.335	3.13	1.34	4.63	10.79
1020	6	68	92	34.01	0.499	3.60	1.42	4.19	10.59
1058	7	68	92	29.93	0.450	3.22	1.31	4.38	10.76
0727	8/6-1	64	87	23.13	0.165	2.06	0.72	3.12	8.90
0815	2	68	91	29.48	0.370	3.34	0.89	3.03	11.32
0857	3	70	94	29.02	0.499	3.07	0.88	3.02	10.59
0939	4	71	94	26.30	0.450	2.83	0.78	2.97	10.76
1028	5	70	93	22.68	0.360	2.25	0.73	3.22	9.92
1109	6	70	94	26.76	0.467	2.44	0.67	2.49	9.12
1152	7	72	95	24.04	0.375	2.63	0.63	2.60	10.94
1233	8	72	94	20.86	0.385	2.15	0.65	3.11	10.31
0706	8/7-1	70	94	27.66	---	--	0.71	2.56	--
0754	2	73	95	20.86	0.240	1.97	0.67	3.22	9.44
0834	3	73	96	28.12	0.370	2.93	0.79	2.79	10.42
0924	4	75	97	31.29	0.467	3.26	0.79	2.51	10.42
1009	5	74	95	---	---	--	0.57[a]	--	--
1048	6	74	95	24.04	0.370	2.74	0.56	2.34	11.40
Averages				25.10			0.96	3.85	10.44

[a]Data not used in computing averages.

retention. Also, the typical recovery phase duration of 28 minutes may be insufficient time for a more complete recovery.

Figures A-1, A-2, and A-3 represent a typical range of recovery dryer loads and emissions. A dryer load with relatively high emissions (approximately 5.2 kg solvent emitted per 100 kg of articles cleaned) is illustrated in Figure A-1. The gradual increase in the volume of solvent is reflected in the narrow peak of the solvent recovery rate. Simultaneously, the concentration of solvent vapor in the condenser inlet climbs steadily during the first 7 minutes of recovery and then levels off at a near constant concentration of 4,400 parts per million (ppm) as solvent. The curve, representing the volume of recovered solvent, has a brief initial period of rapid recovery that is followed by a gradual increase in total volume that reflects a low, nearly constant rate of recovery.

Recovery and concentration curves in Figure A-2 illustrate a dryer load in which solvent emissions were below those of the test average (approximately 2.4 kg solvent emitted per 100 kg of articles cleaned). The graph of condenser inlet vapor concentration shows a much higher (9,358 ppm as solvent) and more pronounced peak than Figure A-1, in addition to much higher concentrations throughout the entire cycle. Concurrently, the curve illustrating the volume of recovered solvent shows an initial period of very rapid recovery that gradually decreases to a lower, near constant rate later in the drying cycle than in the high-emission load. Finally, the curve representing the solvent recovery rate shows a more gradual decrease in recovery rate than that illustrated in Figure A-1, although the peak rate is approximately the same. At the termination of the recovery cycle, the rate of solvent recovery had decreased to a final value of 20 milliliters (0.02 liters) per minute. The average condenser gas outlet temperature for this dryer load did not exceed 34°C (94°F).

Figure A-3 illustrates a dryer load that had total solvent emissions (3.71 kg solvent per 100 kg articles cleaned) approximately equal to the overall test average of 3.85 kg solvent per 100 kg articles cleaned. The curve representing the condenser inlet vapor concentration shows somewhat more of a peak than that of Figure A-1, but a much less pronounced and lower (5,810 ppm as solvent) peak than that of Figure A-2.

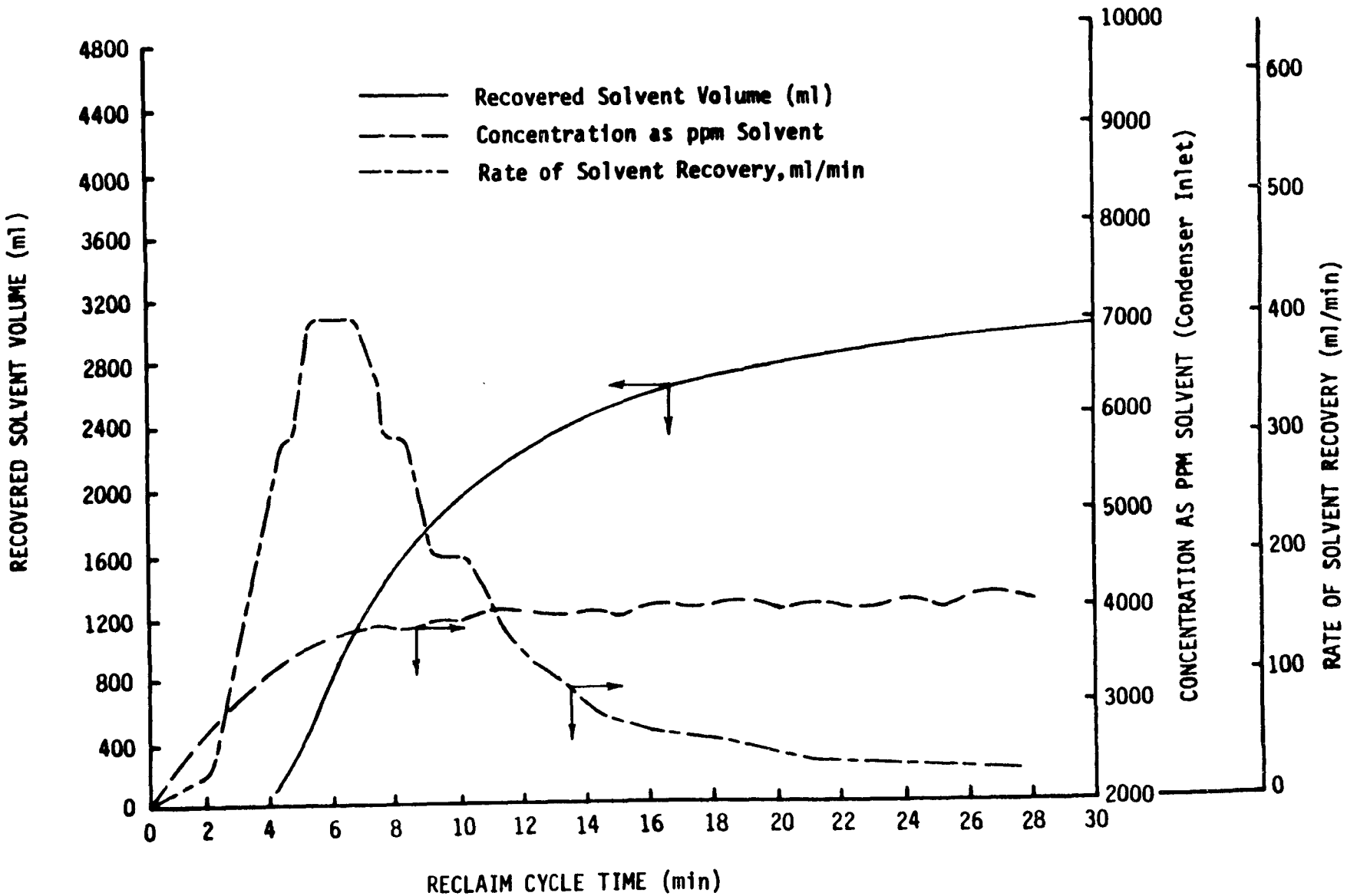

Figure A-1. Recovery and Concentration Curves for a High-Emission Recovery Dryer Load.

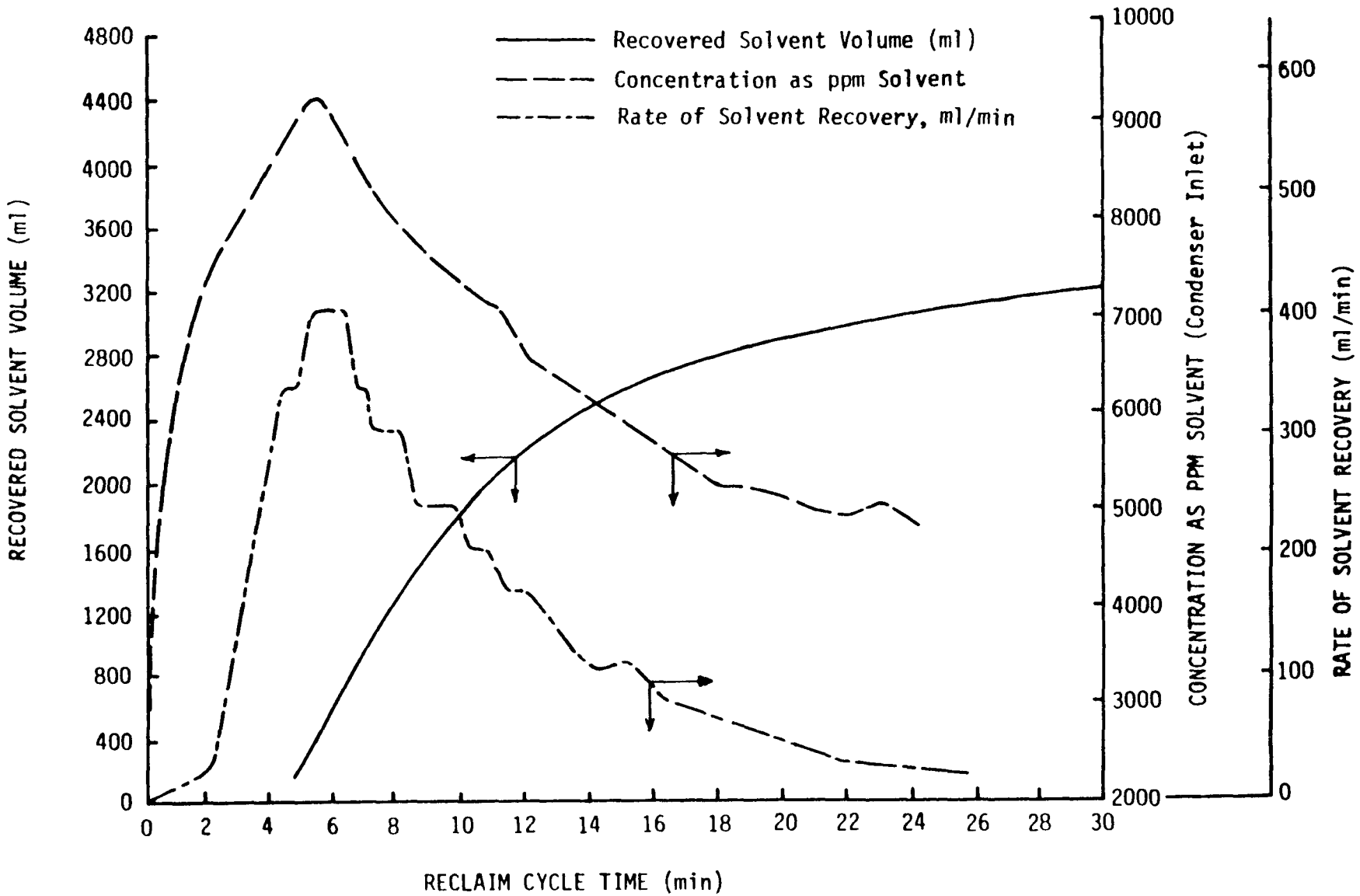

Figure A-2. Recovery and Concentration Curves for a Low-Emission Recovery Dryer Load.

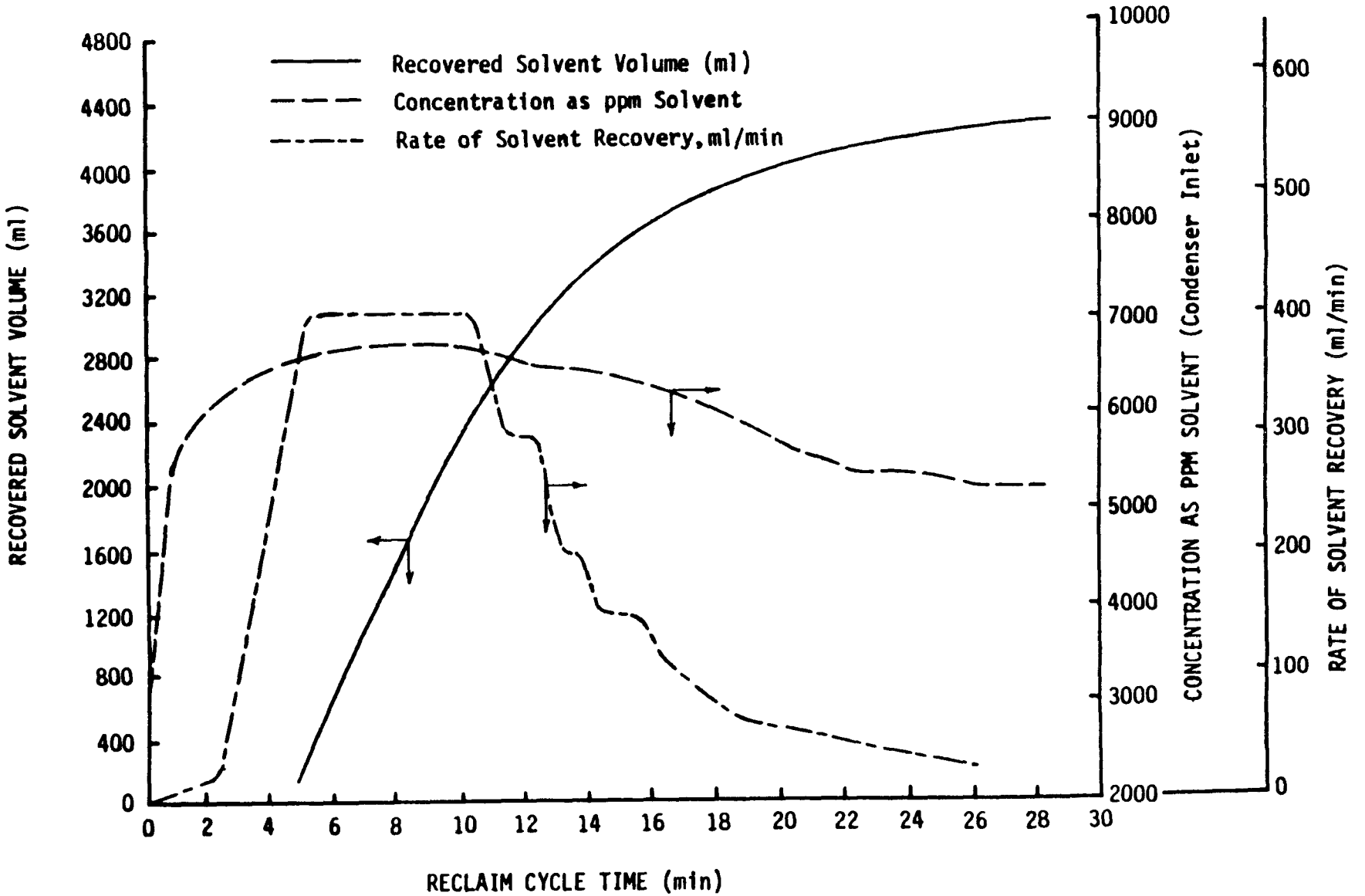

Figure A-3. Recovery and Concentration Curves for a Recovery Dryer with Test-Average Emissions.

Simultaneously, the curve illustrating the volume of solvent recovered (Figure A-3) shows a rapid, sustained increase in total reclamation. This rate is further illustrated in the graph of the recovery rate which stays at a higher rate over the total cycle due to the heavier weight of this dryer load.

The overall decrease in solvent emissions per weight of articles cleaned that accompanied the increase in condenser water inlet temperature appeared to result from the higher solvent vapor concentrations associated with higher temperatures in the dryer tumbler. The rate of solvent condensation in the condenser appeared more dependent on the rate at which solvent was evolved from the drying articles than on the temperature of the cooling water. The 10° actual increase in the condenser water inlet temperature did not appreciably hamper solvent condensation. Thus, emission reduction might be enhanced by increasing the temperature within the dryer; either by increasing the pressure (temperature) of the steam, or by increasing the cooling water temperature. This drying temperature increase, however, could result in solvent concentrations in the tumbler reaching the solvent LEL of 1 percent by volume (10,000 ppmv).

One of the objectives of the test was to determine a "uniform dryness," a level of solvent concentration that would indicate sufficient dryness and solvent recovery. This goal was not attained because of difficulties encountered in the test contractor's equipment and the lack of control over the weight and fabric composition of drying loads. Also, the determination of the solvent content of the dried articles was hampered by the limited accuracy of the plant scales used to weigh the washed and dried loads.

A.3 TEST 3 (RHODE ISLAND)

This EPA-sponsored test program was initiated with the overall objective of analyzing the performance of the petroleum solvent recovery dryer, as indicated by the maximum solvent concentration, solvent emissions, and solvent recovery, while dryer operating parameters were varied. Furthermore, the overall reduction in plant solvent consumption (solvent mileage) was to be determined.

A Hoyt Petro-Miser 105 solvent recovery dryer was tested for two weeks at a dry cleaning plant in West Warwick, Rhode Island that cleans about 2,700 kg (6,000 lb) of personal apparel per week. During the test, solvent concentrations in the dryer tumbler and exhaust were measured to determine, respectively, the maximum solvent concentration during drying and the mass of solvent emitted. Additional measurements of the volume and rate of solvent recovery were made, and load weights and relevant temperatures were recorded. Parameters relating to the dryer operation (load weight, reclaim duration, fabrics, temperatures) were varied and the effects of these variations on emissions, recovery, and concentrations were noted. Finally, data on plant solvent consumption prior to recovery dryer installation were obtained from plant management.

Analysis of the data collected indicated that the magnitude of the maximum solvent concentrations was below expected levels, based on results of previous tests. These low concentrations resulted from persistent difficulties with solvent condensation in the concentration sampling system, brought about by low ambient temperatures. While data on the absolute magnitude of dryer concentrations may have been of questionable value (the maximum value recorded was 3,537 ppmv as solvent) the relative variations in concentrations among dryer loads was found to be valid and consistent with variations in dryer operating parameters. Thus, it was found that the dry load weight and drying (condenser vapor inlet) temperature had the greatest impact on the relative level of solvent concentrations in the dryer.

An analysis of the effects of variations in dryer operating parameters on solvent recovery and emissions indicated that dry load weight and condenser heat removal had the greatest effect on dryer performance, with increases in both parameters corresponding to both higher solvent recovery and reduced solvent emissions. Over the entire test program, solvent emissions averaged 3.47 kg per 100 kg dry weight of articles dried, and solvent recovery averaged 12.98 kg per 100 kg dry weight of articles dried. Plant solvent mileage, as reported by plant management, decreased from about 560 liters (150 gal) per week to about 90 liters (25 gal) per week after instion of the two recovery dryers.

Table A-3 contains the data collected during the test program. Solvent emissions ranged from 1.2 to 7.6 kg VOC per 100 kg dry weight of articles dried, while solvent recovery ranged from 9.9 to 17.7 kg solvent recovered per 100 kg dry weight of articles dried.

Graphs of recovery dryer performance in dryer loads with low, high, and test average emissions are plotted in Figures A-4, -5, and -6. The load (Figure A-4) with the lowest emissions per dry load weight (1.2 kg VOC/100 kg articles dried) has a pronounced "peak" in the solvent concentration after about 10 minutes of recovery that corresponds with the onset of the maximum recovery rate. At the same time, the curve representing the volume of recovered solvent shows a consistent increase in the total volume that decreases significantly only during the last 10 minutes of recovery. In contrast, the high-emission dryer load (7.6 kg VOC emitted/100 kg articles dried) represented in Figure A-5 shows a more consistent tumbler solvent concentration with a narrower peak, a lower maximum recovery rate over a shorter period, and a slowly increasing total volume of recovered solvent that reaches a plateau of approximately 3,000 ml after only 20 minutes of recovery. And finally, Figure A-6 illustrates a dryer load with emissions approximately equal to the test average (3.2 kg VOC/100 kg articles dried). While the tumbler solvent concentration curve shows a gradual decline after a modest peak of 2,800 ppmv (as solvent), the graph of the solvent recovery rate peaks at the same rate as the low-emission load (about 400 ml/min), but the test-average emission load maintains an elevated recovery rate over a smaller portion of the recovery cycle duration.

A.4 TEST 4 (JAPAN)

EPA sponsored two visits to Japan by a test contractor (March 1980 and January 1981) with the goals of identifying and assessing the emissions, recovery, and safety performance of Japanese solvent recovery dryers (Jernigan, 1981). The first trip was limited to test preparations and plant visits, while the second trip was intended to focus on actual field testing of a Japanese recovery dryer. By the end of the first visit, however, it was apparent that field tests could not be conducted due to insurmountable problems with the acceptance of testing equipment

Table A-3. RECOVERY DRYER DATA COMPILATION

Run (date - #)	Load composition	Wet load weight (kg)	Dry load weight (kg)	Reclaim cycle start time	Reclaim cycle duration (min.)	Recovered water (kg)	Recovered solvent (kg)	Kg solvent recovered/ 100 kg dry load weight	Emitted solvent (kg)	Kg solvent emitted/ 100 kg dry load weight	Maximum solvent concentration at condenser vapor inlet (ppmv solvent)	Average condenser water inlet temperature (°C)	Average condenser water outlet temperature (°C)	Average condenser water temperature difference (°C)	Average condenser water flow rate (liters/min.)	Average cooling water heat gain (kilojoules)	Average drying (condenser vapor inlet) temperature (°C)	Average condenser vapor outlet temperature (°C)
12/11-1	M	46.83	38.67	0920	--	1.17	5.54	14.33	--	--	--	15.5	28.7	13.2	--	--	58.2	26.4
2	M	37.76	29.37	1004	25	1.07	4.23	14.40	0.84	2.87	--	16.6	30.0	13.4	11.7	16384	62.2	25.3
3	M	30.73	25.63	1050	25	0.92	3.36	13.11	0.96	3.73	--	17.3	30.2	12.9	13.8	18603	63.0	24.4
4	M	40.82	34.59	1328	25	0.85	4.10	11.85	0.96	2.78	--	17.7	30.4	12.7	11.4	15130	64.2	26.0
5	M	38.67	32.89	1414	25	0.80	4.32	13.13	0.98	2.98	--	19.6	32.8	13.2	15.6	21519	53.9	26.1
12/12-1	M	45.59	37.65	0957	30	0.25	4.85	12.88	1.06	2.82	--	15.8	27.6	11.8	--	--	57.6	22.4
2	M	30.62	25.85	1043	30	0.20	3.87	14.97	0.68	2.63	--	14.3	26.1	11.8	--	--	65.0	22.7
3	M	18.94	15.88	1154	30	0.55	2.05	12.91	0.88	5.54	--	15.3	28.2	12.9	15.9	25721	71.4	23.6
4	M	38.22	31.98	1310	30	0.75	4.78	14.95	0.93	2.92	2772	15.4	27.7	12.3	17.4	26838	62.6	22.4
5	M	27.56	23.25	1353	30	0.75	2.77	11.91	0.74	3.20	2836	14.8	26.5	11.7	16.9	24795	68.3	22.5
12/15-1	S	19.62	16.33	0814	30	0.86	2.16	13.23	0.64	3.92	--	11.1	22.6	11.5	20.6	29707	67.7	18.4
2	W	22.57	18.60	0900	30	0.72	2.27	12.20	0.55	2.98	2884	11.7	21.9	10.2	19.2	24558	58.8	18.8
3	W	16.90	14.06	0945	30	0.75	1.48	10.53	0.62	4.39	2788	11.9	23.1	11.2	17.1	24017	64.7	21.3
4	W	22.23	18.37	1030	30	0.80	2.39	13.01	0.56	3.04	2932	11.2	22.2	11.0	18.6	25657	61.8	18.4
5	W	22.57	18.94	1111	30	0.76	2.41	12.72	0.55	2.92	3027	11.2	21.9	10.7	19.0	25494	62.4	17.6
6	W	22.45	18.71	1155	30	0.70	2.43	12.99	0.54	2.86	3011	11.9	23.4	11.5	16.5	23795	59.4	18.7
7	W	22.57	18.94	1235	30	0.67	2.25	11.88	0.54	2.83	2996	10.7	20.7	10.0	21.0	26334	59.4	16.9
8	S	22.68	18.71	1320	30	0.55	2.25	12.03	--	--	3059	11.4	21.0	9.6	17.9	21549	57.0	17.5
9	W	22.79	19.16	1405	45	0.71	2.32	12.11	0.49	2.58	2932	10.6	20.0	9.0	19.9	33689	59.4	16.2
12/16-1	S	11.68	9.98	0800	30	0.24	0.95	9.52	0.66	6.59	2772	12.4	21.9	9.5	18.4	21920	58.1	16.7
2	W	11.34	9.75	0840	30	0.35	0.99	10.15	0.46	4.74	2996	12.2	22.2	10.0	19.7	24704	59.2	17.3
3	W	22.68	18.94	0925	30	0.79	2.30	12.14	0.47	2.49	3091	12.3	22.8	10.5	17.1	22516	59.2	18.3
4	S	22.68	18.94	1015	30	0.46	2.23	11.77	1.36	7.16	3091	11.8	21.2	9.4	16.1	18978	59.8	21.1
5	W	34.25	29.03	1115	30	0.62	2.86	9.85	0.56	1.94	3305	13.5	24.3	10.8	16.7	22617	57.8	21.4
6	S	34.13	28.69	1220	30	0.85	4.06	14.15	0.53	1.83	3187	6.8	23.4	16.6	15.8	32890	59.1	16.4
7	S	45.36	37.76	1305	30	1.48	5.69	15.07	0.46	1.21	3537	7.1	23.8	16.7	12.4	25968	56.8	18.3
8	W	45.36	38.67	1420	30	1.05	3.87	10.01	0.46	1.20	3123	7.6	20.2	12.6	14.1	22279	53.8	15.9
12/17-1	M	45.36	38.22	0800	40	1.56	5.62	14.70	0.60	1.58	3378	6.6	25.9	19.3	10.4	33560	57.6	17.5
2	M	34.02	27.44	0925	40	1.10	4.54	16.55	0.58	2.12	3378	--	--	--	10.2	--	--	--
3	M	22.68	18.94	1016	40	1.15	2.28	12.04	0.55	2.90	3187	--	--	--	9.7	--	--	--
4	M	11.34	9.19	1110	30	0.50	1.25	13.60	0.48	5.19	2996	6.7	24.6	17.9	10.9	24467	62.1	15.1
5	M	34.02	28.58	1210	40	0.86	3.83	13.40	0.52	1.83	3043	10.1	24.9	14.8	10.8	26725	58.4	15.7
6	M	22.68	18.26	1300	40	0.86	3.23	17.69	0.73	4.02	3250	7.7	39.2	31.5	5.3	27914	60.3	24.8
7	M	22.68	18.94	1355	40	0.77	2.46	12.99	1.43	7.57	3505	8.0	45.8	37.8	4.6	29073	60.7	30.2
12/18-1	M	45.36	38.10	0807	--	0.95	5.48	14.38	--	--	--	5.8	38.6	32.8	--	--	58.6	26.0
2	M	31.64	25.85	0900	40	1.20	3.91	15.13	--	--	--	6.5	42.3	35.8	4.4	26337	60.8	27.9
3	M	55.22	46.15	1007	40	1.47	6.22	13.48	1.12	2.44	3505	6.6	41.5	34.9	4.5	26259	58.7	28.6
4	M	34.02	31.30	1105	40	0.91	3.23	10.32	0.95	3.04	3410	7.6	43.8	36.2	4.9	29658	59.8	28.9
5	M	55.68	48.08	1200	40	1.20	6.46	13.44	1.06	2.20	3474	7.8	42.7	34.9	3.7	21590	59.6	29.2
12/19-1	W	22.91	19.16	0807	35	0.81	1.99	10.39	0.91	4.73	--	18.6	27.6	9.0	12.3	16195	59.9	28.7
2	W	22.91	19.05	0853	35	0.81	2.65	13.91	0.74	3.88	--	18.7	29.6	10.9	12.0	19136	59.6	27.9
3	W	22.68	19.16	0945	35	0.85	2.18	11.38	0.86	4.50	3282	17.7	31.6	13.9	9.0	18302	60.0	28.8
4	M	40.82	34.36	1035	35	1.14	4.83	14.06	1.46	4.25	3187	16.1	31.1	15.0	8.1	17775	58.8	28.7
5	M	12.59	10.09	1130	35	0.35	1.59	15.76	0.66	6.52	--	13.6	35.3	21.7	5.6	17778	62.8	27.6

M = 50% Wools, 50% Synthetic blends

W = 100% Wools

S = 100% Synthetic blends

Run (date - #)	Load composition	Wet load weight (kg)	Dry load weight (kg)	Reclaim cycle start time	Reclaim cycle duration (min.)	Recovered water (kg)	Recovered solvent (kg)	kg solvent recovered/ 100 kg dry load weight	Emitted solvent (kg)	kg solvent emitted/ 100 kg dry load weight	Maximum solvent concentration at condenser vapor inlet (ppm solvent)	Average condenser water inlet temperature (°C)	Average condenser water outlet temperature (°C)	Average condenser water temperature difference (°C)	Average condenser water flow rate (liters/min.)	Average cooling water heat gain (kilojoules)	Average drying (condenser vapor inlet) temperature (°C)	Average condenser vapor outlet temperature (°C)
12/16-8	W	45.36	38.67	1420	30	1.05	3.87	10.01	0.46	1.20	3123	7.6	20.2	12.6	14.1	22279	53.8	15.9

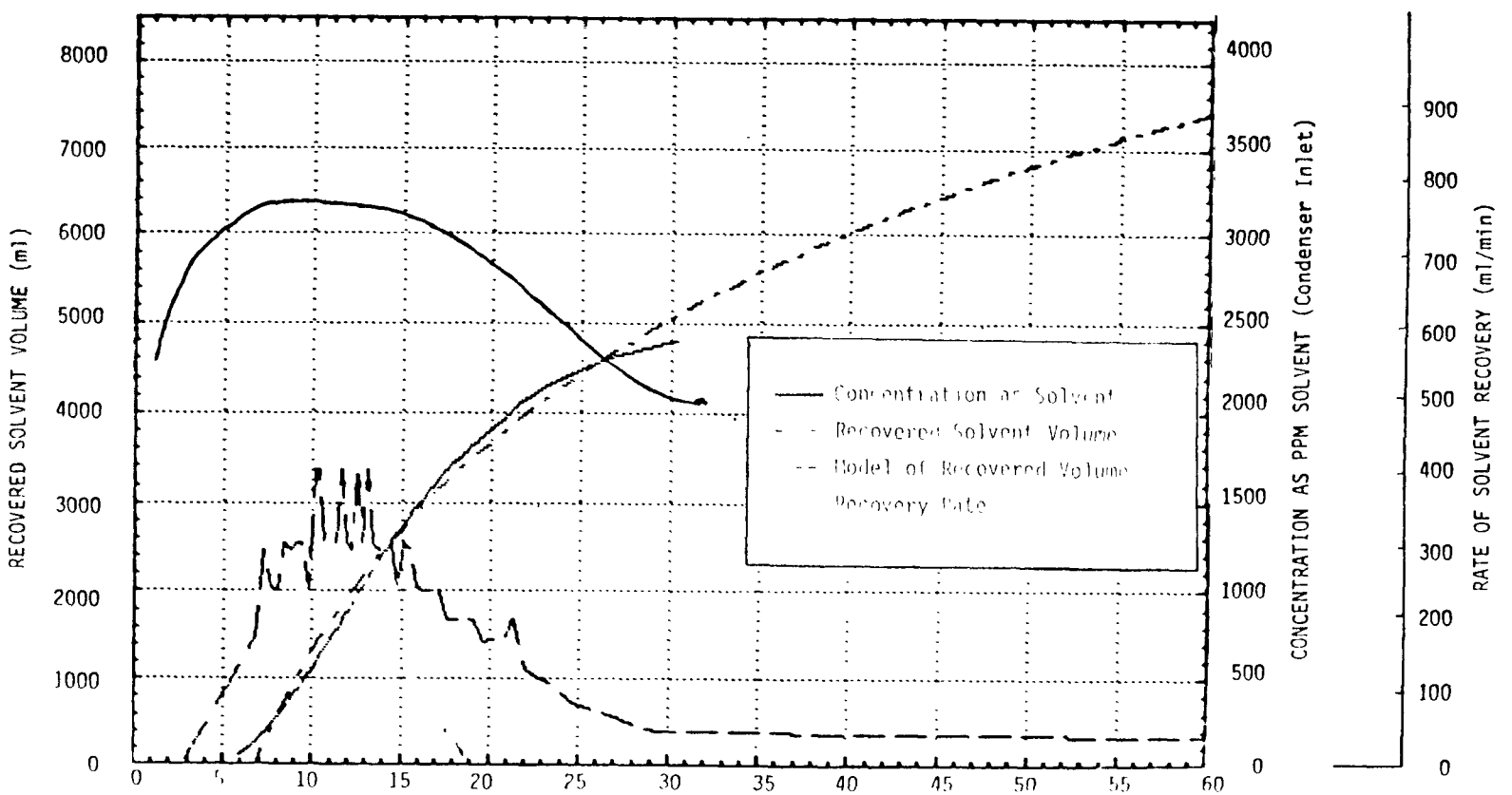

Figure A-4. Recovery and concentration curves for a low-emission recovery dryer load.

Run (date - #)	Load composition	Wet load weight (kg)	Dry load weight (kg)	Reclaim cycle start time	Reclaim cycle duration (min.)	Recovered water (kg)	Recovered solvent (kg)	Kg solvent recovered/ 100 kg dry load weight	Emitted solvent (kg)	Kg solvent emitted/ 100 kg dry load weight	Maximum solvent concentration at condenser vapor inlet (ppmv solvent)	Average condenser water inlet temperature (°C)	Average condenser water outlet temperature (°C)	Average condenser water temperature difference (°C)	Average condenser water flow rate (liters/min.)	Average cooling water heat gain (kilojoules)	Average drying (condenser vapor inlet) temperature (°C)	Average condenser vapor outlet temperature (°C)
12/17-7	M	22.68	18.94	1355	40	0.77	2.46	12.99	1 43	7.57	3505	8.0	45.8	37.8	4 6	29073	60.7	30.2

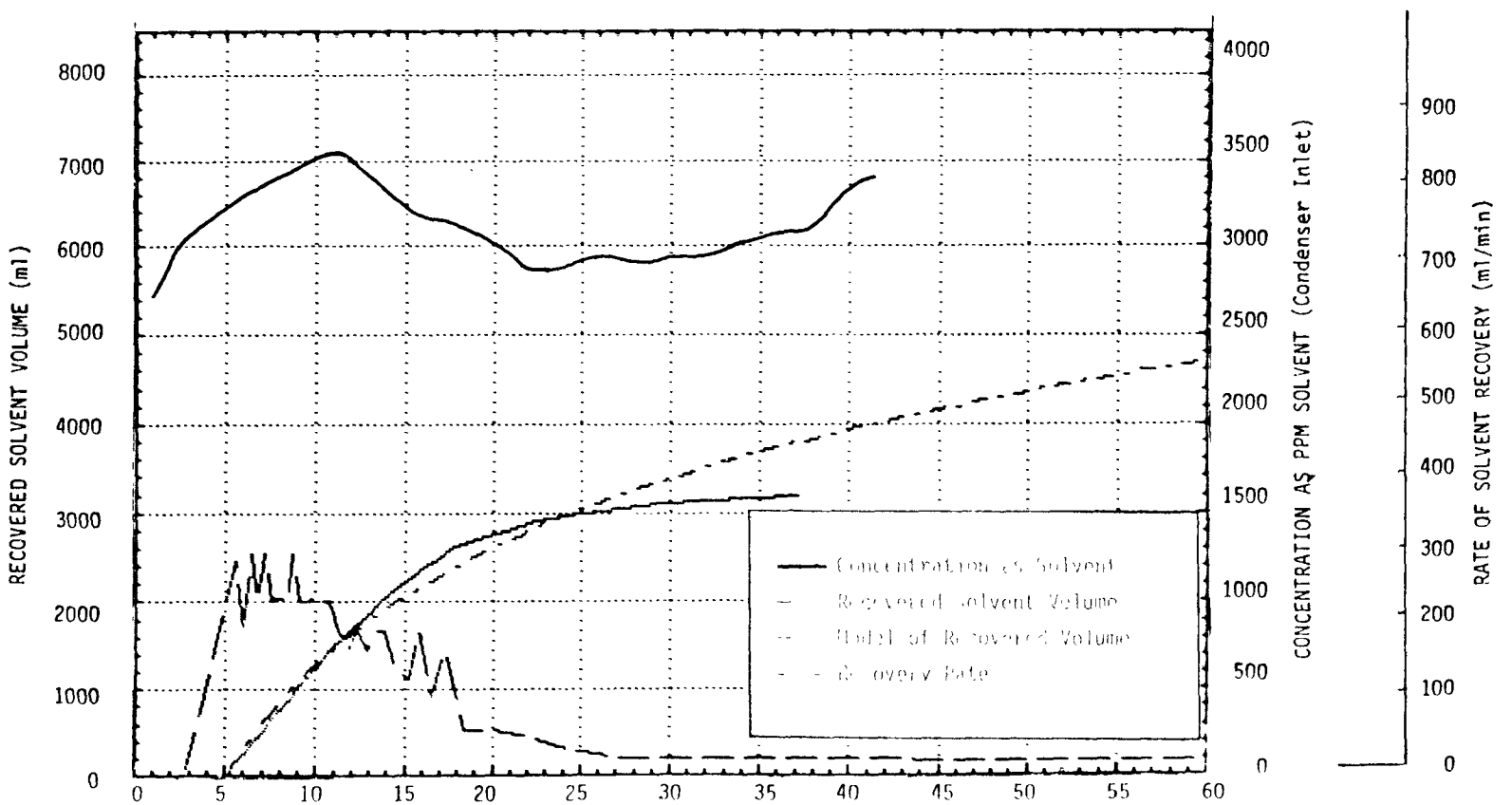

Figure A-5. Recovery and concentration curves for a high-emission recovery dryer load.

Run (date - #)	Load composition	Wet load weight (kg)	Dry load weight (kg)	Reclaim cycle start time	Reclaim cycle duration (min.)	Recovered water (kg)	Recovered solvent (kg)	Kg solvent recovered 100 kg dry load weight	Emitted solvent (kg)	Kg solvent emitted/ 100 kg dry load weight	Maximum solvent concentration at condenser vapor inlet (ppm solvent)	Average condenser water inlet temperature (°C)	Average condenser water outlet temperature (°C)	Average condenser water temperature difference (°C)	Average condenser water flow rate (liters/min.)	Average cooling water heat gain (kilojoules)	Average drying (condenser vapor inlet) temperature (°C)	Average condenser vapor outlet temperature (°C)
12/12-5	M	27.56	23.25	1353	30	0.75	2.77	11.91	0.74	3.20	2836	14.8	26.5	11.7	16.9	24795	68.3	22.5

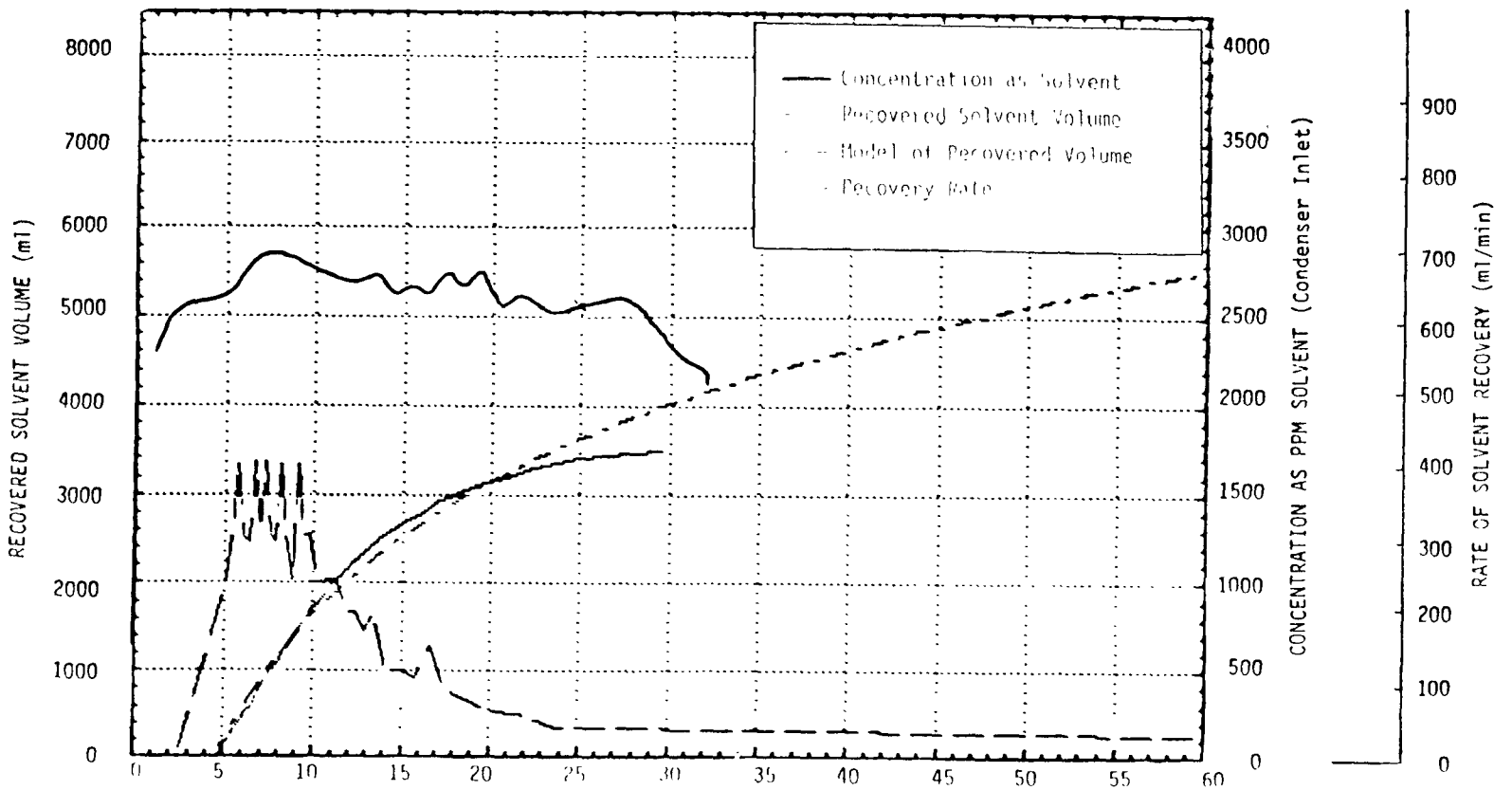

Figure A-6. Recovery and concentration curves for a recovery dryer load with emissions approximately equal to the overall test average.

(particularly FIA calibration gases) by Japanese customs. As a result of these problems, the second visit to Japan was conducted like the first, with a single EPA representative visiting major recovery dryer manufacturers, as well as a dry cleaning trade association and individual dry cleaning plants.

There were approximately 1,800 petroleum solvent recovery dryers operating in Japan at the time of the test visit, according to the All-Japan Laundry and Drycleaning Association (AJLDA). These units were designed like their American counterparts, with steam-heated evaporation of solvent from drying clothes being followed by solvent recovery in a refrigerant-chilled condenser prior to the reheating of the circulating vapor stream. In contrast to American-made recovery dryers with typical load capacities of up to 48 kg, Japanese recovery dryers have load capacities of 15 to 20 kg, with only a few units (approximately 90) with a 50 kg capacity.

For purposes of comparison, AJLDA estimated that there were about 5,900 non-recovery petroleum solvent dryers operating in Japan. In addition, over the previous five years, there had been about 17 explosions or fires in recovery dryers and about 50 in non-recovery dryers. None of the recovery dryer explosions had resulted in personal injury, and the ratio of the number of existing dryers to the number of explosions was the same (1,000 to 1) for both recovery and non-recovery dryers. The absence of damage and personal injury in recovery dryer accidents resulted from the recovery dryer's ability to safely control an explosion while preventing fires (which were typical of accidents in non-recovery dryers). The Japanese method of explosion relief around the dryer door had the same effect as the explosion damper ports on top of the American-made recovery dryer, with the force of the explosion being vented to the atmosphere. Finally, the AJLDA reported that Japanese recovery dryers could recover from 70 to 95 percent of the solvent contained in drying loads, depending on the recovery cycle duration and the condenser cooling water temperature.

A.5 TEST 5 (WILMINGTON)

An EPA-sponsored study was conducted to determine the rate of solvent drainage from heavily soiled cartridge filter elements and to

compare the drainage rates of new and soiled cartridges. A recommendation was made for a minimum drainage time for these elements based on the total maximum solvent emission from the entire filtration system (Plaisance, 1981).

The host plant for this study was a petroleum dry cleaning facility located in Wilmington, North Carolina. This plant cleaned approximately 900 kg (2,000 lbs) of lightly soiled general apparel each week, expending about 380 liters (100 gallons) of Ashland Kwik-Dri solvent. Dry cleaning equipment used at this facility was limited to a single 27 kg (60 lb) capacity Marvel Matic washer and two 22 kg (50 lb) capacity Heubsch Originator dryers. Spent solvent was filtered and purified by a 14-element cartridge filter (Puritan Vanguard 14) which employed 12 carbon-core and 2 all-carbon filter cartridges. The carbon-core filter elements served to both remove solids and provide initial purification, while the all-carbon filter element provided final solvent purification.

The test program for this study consisted of removing two filter cartridges (one carbon-core and one all-carbon) that contained heavy concentrations of lint and dirt from the cartridge filtration system. These elements, along with two new cartridge elements (one of each type), were soaked in sealed containers of solvent and then were allowed to drain while weight loss readings were recorded. The cartridge elements then were placed under an exhaust hood where the solvent was allowed to evaporate freely at room temperature, and each sample cartridge was weighed twice each day for seven days.

A comparison of the percent solvent loss, as a function of drainage time between new and used cartridges, indicated that the soil and residue loadings of both used cartridges caused a lower rate of solvent drainage. The largest differences in drainage rates occurred between new and used all-carbon cartridges, while a similar comparison of carbon-core cartridges resulted in a more equal percent drainage of initial solvent content over the entire drainage period. In general, carbon-core cartridges gave up solvent at a higher rate than all-carbon cartridges over extended periods of drainage and evaporation.

The results of this test indicate that a solvent drainage duration of 8 to 12 hours (overnight) would be sufficient to produce a minimal total emissions (see Figure A-7), while being brief enough to prevent disruption of normal plant operation. The undrained system emission rate of 0.56 kg solvent per 100 kg dry weight of articles cleaned would be reduced by 37 to 40 percent after drainage durations of 8 to 12 hours, respectively. Table A-4 shows emissions from cartridges over a period of several days. Comparison of solvent retention in new and used cartridges indicates that new cartridges having no soil and residue loading would have initial (undrained) emission roughly equivalent to those of the used cartridges. Therefore, general results gained in this test could be applied to facilities having lower throughputs between cartridge replacements and/or lower soil loading.

A.6 TEST 6 (ANAHEIM)

EPA contracted a study to collect and analyze data at a large industrial dry cleaning facility to evaluate the technical and economic feasibility of reducing the solvent content of still wastes through: (a) operating procedure modifications, and by (b) installing a densiometer in the still bottom to control the boildown schedule. In addition, hydrocarbon concentrations were measured from fugitive sources within the dry cleaning plant during the test period (Jernigan and Kezerle, 1980).

The host plant for this test was a large industrial laundering and dry cleaning facility located in Anaheim, California. This facility utilized a 230 kg (500 lb) Washex washer/extractor and a 180 kg (400 lb) Challenge-Cook dryer to clean approximately 8,700 kg (19,000 lbs) of articles per week. In addition, the facility had two solvent stills, each with a 1,900 liter (500 gal) per hour capacity, manufactured by Washex. Data were collected at the plant for this evaluation from November 5 to November 19, 1979.

Procedures used to accomplish the test objectives included the determination of the boildown time for the vacuum still and the determination of the specific gravity of the solvent/still waste mixture during distillation by using a densiometer. Plant records were examined

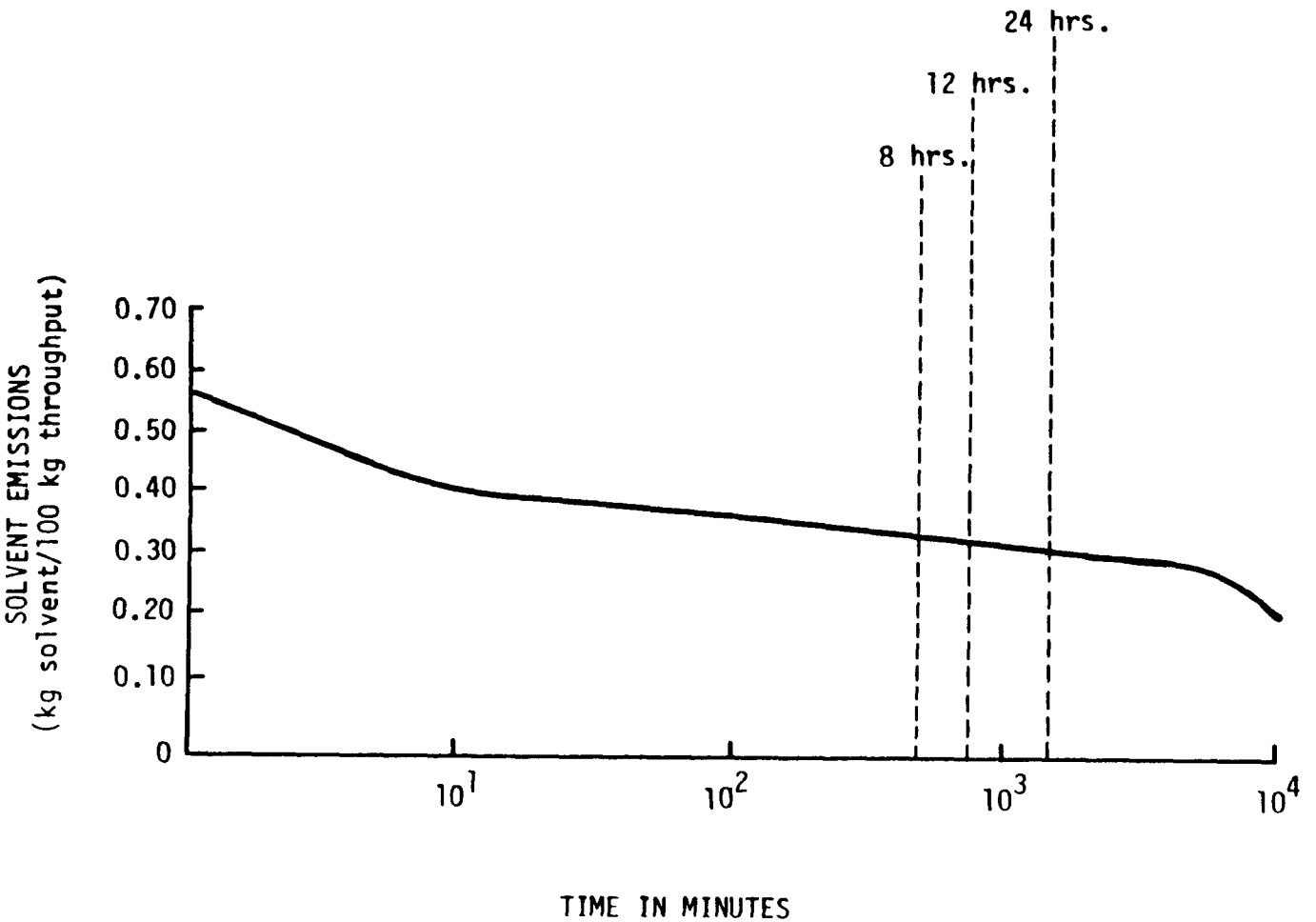

Figure A-7. Solvent Emissions for Filter Cartridges as a Function of Drainage Time.

Table A-4. TOTAL SOLVENT EMISSIONS DUE TO DISPOSAL OF 14 FILTER CARTRIDGES (12 CARBON-CORE AND 2 ALL-CARBON) AS A FUNCTION OF DRAINAGE TIME

Elapsed drainage time	Solvent emissions (in kg solvent emitted per 100 kg of articles cleaned)	Percentage of undrained emissions
0	0.56	100
8 minutes	0.41	73
8 hours	0.35	63
12 hours	0.34	62
8.25 days	0.22	39

to determine the frequency of still boildowns. In addition, fugitive solvent emission levels at various locations in the plant were measured using a Beckman 400 flame ionization analyzer (FIA).

Hydrocarbon concentrations in and around the work area in the dry cleaning facility were reported as parts per million (ppm) of propane. (A standard conversion factor from propane to Stoddard of 3.36 was calculated.) Emissions could be approximated only for the roof exhaust, where approximately 1.56 kg (3.43 lbs) of Stoddard solvent was emitted per hour. The highest solvent vapor levels in the workplace were recorded around the washer, averaging about 3,300 ppm as propane or 980 ppm as Stoddard. Hydrocarbon concentrations at the clean solvent tank were an order of magnitude higher, reaching as high as 24,000 ppm as propane or 7,150 ppm as Stoddard solvent.

Results of this test indicated that measuring the specific gravity of the still contents during distillation with a densiometer was not feasible or even desirable, due to the adverse thermal and mechanical effects of rapid boiling on the sensitive densiometer mechanism. However, the solvent content of the still waste generated at this petroleum dry cleaning facility could be reduced, with no adverse effects, by boiling down the stills less frequently. At the time of this test program, the stills were boiled down and the waste in the sump was discarded daily. This meant that 144 liters (38 gal), or 115 kg of still waste, containing approximately 90 percent pure solvent by volume was discarded each day. Table A-4 records the samples of still waste that were analyzed for solvent content before and after boildown. On the first day (11-07-79) the still waste (sample VIS-4) contained more than 99 percent by volume (97% by wt) solvent. Still waste sample VIS-21 on the seventh day (11-14-79) represents the typical volume of solvent discarded daily at this plant and has the highest daily throughput. This sample contained approximately 90 percent by volume (91% by wt) solvent, representing a reduction of 5 percent over sample VIS-4, due to the reduced boildown frequency.

Results from solvent content analyses conducted on 11-15-79 and 11-16-79 (VIS-23 and VIS-26, respectively) showed no appreciable difference in their solvent contents. Instead of a decrease in solvent

content from samples VIS-23 to VIS-26, there was actually a 2 percent increase. This increase is considered insignificant on a day-to-day basis and may be attributable to a number of factors such as a change in the type of articles cleaned, still operation, or a slight variation in laboratory procedures for analyzing the still waste.

Still waste was allowed to accumulate for 10 days (11-09-79 to 11-19-79) before the still was boiled down again. On the last day of testing, the still was boiled down and sample VIS-30 was analyzed for its solvent content. This sample contained 25 percent less solvent, on a mass basis, than VIS-4 and 21 percent less solvent than VIS-26, as shown in Table A-5.

The analytical procedures used to determine the solvent content in each sample involved determining the moisture content by the Carl-Fisher Method and gravimetrically determining (at 103°C) the nonvolatiles in the samples. The solvent content then was determined by a process of elimination, in which the quantity of nonsolvent components was determined and then was subtracted from the total sample mass.

An alternate method to decrease solvent losses would be to reduce the total volume of still waste, by eliminating the inactive space in the still below the steam chest. In the tested still design, liquids below the steam chest did not receive sufficient heat to vaporize during boildown. These liquids, which contained a high concentration of solvents, were discharged daily after boildown. The more frequently the still was boiled down, the greater the amount of solvent discarded with the wastes.

A VOC emission rate of 1.53 kg per hour was recorded (11-09-79) during the course of a 6-hour dry cleaning day when approximately 1,360 kg (3,000 lbs) of pants were dry cleaned. This equates to 227 kg of articles cleaned per hour. Thus, the ratio of the mass of fugitive solvent emitted per hour to the mass of articles cleaned per hour is 0.687 kg of fugitive VOC emitted per 100 kg of articles cleaned. Two access doors were open (front and rear of the dry cleaning area) during the fugitive emissions test. It is assumed that the recorded fugitive emissions rate would have been higher if these doors were closed.

Table A-5. RECORD OF STILL WASTE BOILDOWN SAMPLES

Date	Military time	Sample no.	Throughput (kg)	Still waste (kg)	Weight percent solvent in waste	Solvent loss with waste (kg)	(kg) solvent loss/ 100 kg articles cleaned
11/07/79	0730	VIS-4	1360	115	97.40	112	8.20
11/14/79	1245	VIS-21	1588	115	92.20	106	6.70
11/15/79	1230	VIS-23	1360	115	91.30	105	7.70
11/16/79	1200	VIS-26	1425	115	93.00	107	7.50
11/19/79	1320	VIS-30	1425	115	73.00	84	5.90

A.7 TEST 7 (ANAHEIM)

EPA contracted the evaluation and demonstration of carbon adsorption technology at an industrial dry cleaning facility in Anaheim, California (Lutz et al., 1980). This program was developed to determine the effectiveness of carbon adsorption in controlling VOC emissions. It consisted of fitting a prototype carbon adsorption unit, purchased from VIC Manufacturing Company of Minneapolis, Minnesota, to the dryer exhaust of a petroleum solvent industrial dry cleaning dryer; operating the system to collect performance data; and evaluating the economics of operation at this establishment.

The host dry cleaning plant in Anaheim, California, is a large, industrial facility utilizing a 230 kg (500 lb) Washex washer/extractor and a 180 kg (400 lb) Challenge-Cook dryer to process approximately 8,700 kg (19,000 lb) of general apparel per week. This throughput represents about 50 percent of the 8-hour capacity of the dry cleaning dryer. Data were developed to determine the effect of the different utilization rates on the various parameters under evaluation. After installation of the carbon adsorption unit, testing was conducted at the facility from July 24, 1978 to March 23, 1979.

Test procedures used during the carbon adsorption test program included a determination of hydrocarbon concentrations by continuously sampling the gas streams to and from the carbon adsorption unit. This was accomplished using two Beckman 400 flame ionization analyzers (FIA). Both the inlet and exhaust gas stream flow rates were continuously monitored, as were the temperatures of the various liquid and gas streams. Other parameters measured during the test program included: electricity consumption, natural gas consumption, water usage, steam flow rate to adsorption unit, and solvent recovery rate. In addition, samples of solvent and samples of carbon from the carbon bed were analyzed infrequently during the test period.

The carbon adsorber system (see Figure A-8) was initially operated in strict compliance with the recommendations and instructions of the adsorber manufacturer and his field representatives. Early in this test period, it became apparent that the adsorption system had been over-designed, resulting in removal efficiencies far in excess of the

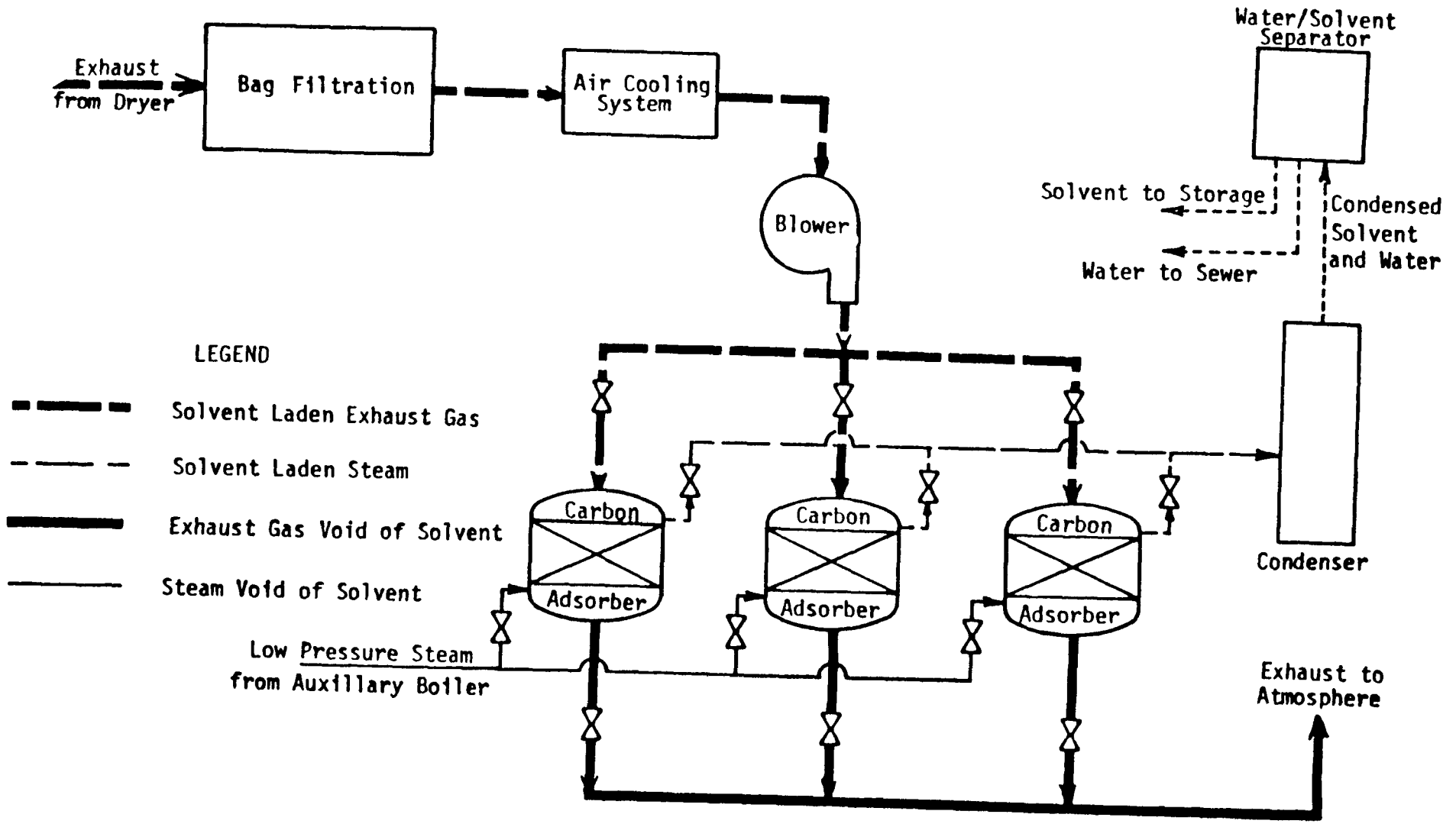

Figure A-8. Carbon Adsorption System Schematic.

specified performance guarantee of 90 percent solvent removal on a 24-hour average. The test program was, therefore, amended to include an evaluation of changes to the design and operating procedures for the carbon adsorption system. Various design parameters were modified to determine their effect on the performance and cost of the adsorption system. From these studies, an optimized system was established for use in evaluating the performance, cost, and cost effectiveness of utilizing carbon adsorption technology for the reduction of VOC emissions from petroleum dry cleaning plants.

The following alterations to the original adsorber design resulted from the optimization: (1) the lint filter area was increased by 80 percent to facilitate daily cleaning; (2) the blower that forces the dryer exhaust through the adsorber was modified to operate only when the dryer was running, rather than continuously; (3) the original system of three carbon beds was reduced to two beds; (4) desorption steam pressure, flow rate, and duration were optimized at 103 kilopascals, 590 kg/hr, and 60 minutes, respectively; and (5) the adsorber inlet (dryer exhaust) vapor cooler was eliminated, because dryer exhaust temperatures were insufficient to damage the carbon beds.

The hydrocarbon emission reduction efficiency for the optimized design (applied to the dryer exhaust) was 95 percent, and varied from 93 percent for a plant with 100 percent utilization to 97 percent at 25 percent utilization. Capital costs for this system, including site preparation and equipment installation, are estimated at $128,000 (mid-1978 dollars). Cost effectiveness, defined as the annual operating cost divided by the quantity of emission reduction, is a function of equipment utilization rates, and additionally exhibits a strong dependence on the market value of the recovered solvent. A solvent cost of $0.16/liter ($0.61/gal) was assumed for the basic analysis, but the effect of increases in petroleum costs on annualized operating costs was investigated. The cost effectiveness of the optimized design was $560/Mg ($510/ton), and was estimated as $1,090/Mg ($980/ton) and $220/Mg ($200/ton) for 25 percent and 100 percent utilization, respectively. When the value of Stoddard solvent reaches $0.60/liter ($2.30/gal), the optimized system (50 percent utilization) will have zero annual operating costs, neglecting the rise in other operating expenses.

The results of this project demonstrate the technical feasibility of applying carbon adsorption technology to reduce the emission of hydrocarbon solvents from dryer exhausts at petroleum solvent dry cleaning plants. The cost effectiveness of this technique, $560/Mg ($510/ton), is expected to drop significantly as the value of the reclaimed solvent, a petroleum distillate, increases. Even at its present cost effectiveness, carbon adsorption is economically comparable with the cost of emission reduction required in other industries. An additional benefit, provided by the application of carbon adsorption technology to the petroleum dry cleaning industry, is the reduction in overall consumption of petroleum products by these plants. The demonstration plant recovered solvent at a rate of 61,000 liters (16,000 gal) per year which otherwise would have to be replaced with new solvent purchases.

A.8 REFERENCES FOR APPENDIX A

Jernigan, R. 1981. Identification and Assessment of Emission Control and Safety of Japanese Petroleum Solvent Recovery Dryers. TRW Inc. Research Triangle Park, North Carolina (EPA Contract No. 68-03-2560).

Jernigan, R. and J. Kezerle. 1981. Evaluation of the Potential for Reduction of Solvent Losses Through a Washex Petroleum Vacuum Still Sump. TRW Inc. Research Triangle Park, North Carolina (EPA Contract No. 68-03-2560, Task No. T5013).

Jernigan, R. and S. Lutz. 1980. An Evaluation of the Emission Reduction Potential of a Solvent Recovery Dry Cleaning Dryer. TRW Inc. Research Triangle Park, North Carolina (EPA Contract No. 68-03-2560).

Jernigan, R., G. May., and S. Plaisance. 1981. An Evaluation of Solvent Recovery and Emission Control of a Solvent Recovery Dry Cleaning Dryer. TRW Inc. Research Triangle Park, North Carolina (EPA Contract No. 68-02-3063).

Lutz, S., S. Mulligan and A. Nunn. 1980. Demonstration of Carbon Adsorption Technology for Petroleum Dry Cleaning Plants. Cincinnati, Ohio. EPA Publication No. 600/2-80-145, EPA/IERL.

Plaisance, S. 1981. A Study of Petroleum Dry Cleaning Cartridge Filter Element Emissions. TRW Inc. Research Triangle Park, North Carolina (EPA Contract No. 68-02-3063).

Plaisance, S., R. Jernigan, G. May, and C. Chatlynne. 1981. An Evaluation of Petroleum Solvent Concentrations, Emissions, and Recovery in a Solvent Recovery Dryer. TRW Inc. Research Triangle Park, North Carolina (EPA Contract No. 68-03-2560).

APPENDIX B
EMISSION MEASUREMENT PROCEDURES

APPENDIX B
EMISSION MEASUREMENT PROCEDURES

Emission measurement procedures for large petroleum dry cleaners would be based on a determination of the amount of solvent lost in the overall dry cleaning process (material balance). This procedure could be replaced or augmented by field test procedures on particular items of dry cleaning equipment, such as the solvent recovery dryer or the vacuum still. Both of these procedures will be described in the following sections.

B.1 MATERIAL BALANCE METHODS

Material balance methods can be used to determine the total loss of solvent in a petroleum solvent dry cleaning plant by measuring solvent input and output at each step of the dry cleaning process (solvent storage, washing, drying, filtration, distillation, and losses from fugitive sources.) A material balance requires measurement of clothes and solvent over a number of loads in addition to solvent levels in the system before and after testing. All significant sources of solvent must be accounted for. The following method was developed by EPA (for the Perchloroethylene dry cleaning CTG) with the assistance of an EPA contractor and the International Fabricare Institute. The method outlined here should be considered flexible for the different processes in the industry.

A. Before the test begins, establish a solvent baseline by the following methods:
   1. Drain entire cartridge filter contents (solvent) to holding tank (or vacuum still).
   2. Complete distillation and begin boildown of vacuum still. Remove cartridge filters and discard.

3. On completion of still boildown, remove still bottoms (high boilers).
4. Start up wash pump to fill filter housing (ideally, machine should be on continuous recirculation - solvent circulating between base tank and filter and returning).
5. Add any detergent needed. (Take solvent sample, if needed).
6. Measure solvent level by dip stick or gauge in washer base tank or ground tank. (Account for residue volume in bottom of tank.)
7. Make sure that the recovered solvent flow from the recovery dryer is directed to the washer base tank or ground tank.

B. During the test:
Record weight of all loads.

C. After the test period, recreate conditions of first solvent measurement by repeating Steps A.1 through A.4. Another sample may be taken to determine detergent concentration in the "charged" solvent, if needed.

The solvent loss in cartridge filters is a fixed loss for the number of loads recommended for use. In other words, if a filter vendor recommends 200 loads of articles as the filter life, the loss from a filter change is the same as the 200 loads whether there are 50 loads or 300 loads run during the test period. The loss from filters for a test of less than the recommended filter life should be prorated to the life of the filter. A loss of 1 kilogram after 50 loads on a filter of 200 load life should be considered in the calculation as a loss of 0.25 kilograms.

Fixed losses are a significant factor in petroleum solvent washers. A 70 kilogram load in a 115 kilogram capacity machine will have nearly the same loss as a 115 kilogram load in the same machine. In calculating kilograms of clothes throughput, the vendor capacity times the number of loads should be used instead of the actual load weight. (The IFI and other trade organizations can relate cubic feet of water volume to capacity by available factors too extensive to list here.)

To determine solvent consumption, the solvent level (minus detergent, sizing, etc.) of the initial measurement (Step A.6) is compared to the solvent level (minus detergent, sizing, etc.) of the final measurement (Step C). All solvent added during the test period should be accounted for.

To determine the system emission factor for the test period (which should be for at least 20 working days and 14,000 kg of articles cleaned), the solvent consumption is divided by the weight of clothes cleaned, resulting in a determination of the mass of solvent lost (emitted) per mass of articles cleaned.

According to the IFI, samples should be analyzed for detergent concentration, moisture, nonvolatiles, dry sizing, and insoluble materials. A Hyamine 1622 or Aerosol OT Titration should be used for detergent concentration reported on a volume/volume percent basis. The moisture content is determined by a Karl-Fischer titration procedure and reported as grains of water/100 milliliters of solution. Nonvolatile residue is determined gravimetrically by a steam bath evaporation of a measured volume of solvent and weighing the residue. Dry sizing content is determined by extracting the nonvolatile residue with boiling ethyl alcohol. Insoluble material content is to be determined gravimetrically after filtration of a volume of solvent through a 0.20 micrometer membrane.

B.2 RECOVERY DRYER EMISSIONS MEASUREMENT

Petroleum solvent recovery dryer VOC emissions can be determined by either a material balance on the dryer or by using a flame ionization analyzer (FIA) to determine the solvent content of the dryer atmospheric exhaust.

B.2.1 Direct Measurement of Dryer Exhaust Emissions

The determination of recovery dryer emissions by FIA analysis of dryer exhaust solvent concentrations is a more complex and technically demanding procedure than the material balance method discussed below. The methods used in this test should include EPA Reference (40 CFR Part 60) Test Methods 1, 2, and proposed (45 FR 83126 December 17, 1980) 25A.

While Methods 1 and 2 would govern the selection of atmospheric vapor exhaust sampling points and the procedure for determining the

exhaust flow rate, respectively, Method 25A would govern the measurement of the VOC (as propane) vapor concentration in the control device atmospheric exhaust by a flame ionization analyzer (FIA). First, a response ratio of the FIA's measurement of a given concentration of propane to the same concentration of VOC (solvent) would be determined in the laboratory (see Attachment 1). Then the FIA would be field calibrated to measure concentrations of propane gas, and the measured ppmv concentrations (as propane) of the control device exhaust gases would be multiplied by the previously determined response ratio, thereby determining the ppmv concentration (as solvent) of the VOC emissions. Then by calculation, one would convert the VOC concentration by volume (ppmv) to mass concentration. This procedure should be carried out under various conditions of fabric type, load weight, and temperatures that are typical of the range encountered in the dry cleaning industry. The results of this procedure should be reported as kilograms VOC emitted per 100 kilograms dry weight of articles dry cleaned. Subsequent changes in the design or performance of the control device could necessitate a reevaluation of the device's maximum VOC emissions. Since Method 25A is not a promulgated EPA Reference Test Method (as of the date of this appendix) and subject to change an alternative test procedure can be used in the interim. One alternate test method is: "Alternate Test Method For Direct Measurement of Total Gaseous Compounds Using A Flame Ionization Analyzer," presented in the OAQPS Guideline Series document entitle, "Measurement of Volatile Organic Compounds" (Revised September 1979, EPA-450/2-78-041).

B.2.2 Dryer Material Balance

Like the plant-wide material balance previously discussed, the recovery dryer material balance measures dryer emissions by accounting for all solvent entering and leaving the dryer. A material balance of the solvent input and output in a recovery dryer should be based on precise weight measurements of dried loads, recovered solvent, and water. For a given load, the dry load weight should be measured and recorded prior to washing. The load should be weighed after washing and the weight should be recorded before drying. During drying, the recovered solvent and water should be collected and their weights should be recorded

at the end of drying, along with the weight of the dried load. Based on the assumptions that the weight of the dirt removed from the load in washing is insignificant (when compared with the load weight) and that all of the water contained in the dried articles is recovered, the weight of solvent could be calculated from the following equation:

$$WSE = \frac{PDW - PWW - WRS - WRW}{PWW} \times 100$$

Where

WSE = Weight of Solvent Emitted per 100 kg of articles cleaned (including dryer exhaust emissions, solvent contained in dried articles, and fugitive losses within the dryer)

PDW = Pre-Dried Weight of articles (kg)

WRS = Weight of Recovered Solvent (kg)

WRW = Weight of Recovered Water (kg)

PWW = Pre-Washed Weight of articles (kg)

Scales used in measuring these weights should be accurate to 0.25 kg at weights of up to 100 kg. These weighings should be conducted during normal plant operations that reflect typical load sizes, fabric types, and operating parameters such as cooling water temperature and flow rate, drying temperature, and recovery cycle duration.

B.3 DETERMINATION OF SOLVENT CONTENT OF VACUUM STILL AND FILTRATION WASTE

A determination of the quantity of solvent contained in vacuum still and filtration waste would require periodic sampling of waste removed from the still after boildown or removal of filter waste from its housing, respectively. At least three one-kilogram samples of still and filtration waste should be taken after a period in which conditions of soil loading, load weight, and fabric type vary over a range that is typical for the facility. These samples should be collected in sealable containers which are impervious to petroleum solvent. Also, the total mass of articles cleaned since the previous still boildown or filter change should be recorded, as should the total mass of still or filter waste produced since the previous waste removal.

Determination of the solvent content of the still and filter waste should be based on the application of the procedure outlined in ASTM Method D 322-80 (Standard Test Method for Gasoline Dilutent in Used

Gasoline Engine Oils by Distillation). This procedure (see Attachment 2) should result in a determination of the solvent content (mass) per unit mass of still or filter waste. This factor should be multiplied by the mass of still or filter waste produced per 100 kg dry weight of articles cleaned. The final result of this procedure should be a determination of the mass of solvent contained in still or filter waste per 100 unit mass of articles dry cleaned.

ATTACHMENT 1

DEVELOPMENT OF A SOLVENT-TO-PROPANE RESPONSE FACTOR

The chemical properties of petroleum solvent vary from supplier to supplier and also from shipment to shipment of solvent. For this reason, standard calibration gases for petroleum solvent are unavailable for use in calibrating the hydrocarbon analyzer (FIA). Propane (C_3H_8) span gases with concentrations of 10,000 ppm, 1,000 ppm, and 100 ppm having an analytical accuracy of ±2 percent can be used for calibration during the field test program and also during the laboratory development of a solvent-to-propane response factor to convert concentration readings as propane to concentrations of petroleum solvent. These span gases should be certified and traceable to the National Bureau of Standards (NBS) by the gas supplier.

In order to determine the relationship between the hydrocarbon concentration data recorded from an FIA calibrated to propane and actual solvent concentrations, a response factor has be determined. The following is a laboratory test that was developed as a guide to the determination of a solvent-to-propane response factor.

RESPONSE FACTOR DETERMINATION

Prior to running the solvent samples, the solvent preparation system (Figure B-1) should be given time to reach the proper temperature and stabilize. The system then should be purged several times with zero hydrocarbon air, and the exhaust of each purge monitored to ensure that the system is free of hydrocarbons. Before the purging of the system begins, the hydrocarbon analyzer should be calibrated with zero hydrocarbon air which contains less than 2 ppm of total hydrocarbons and span gas which contains 100 ppm of propane.

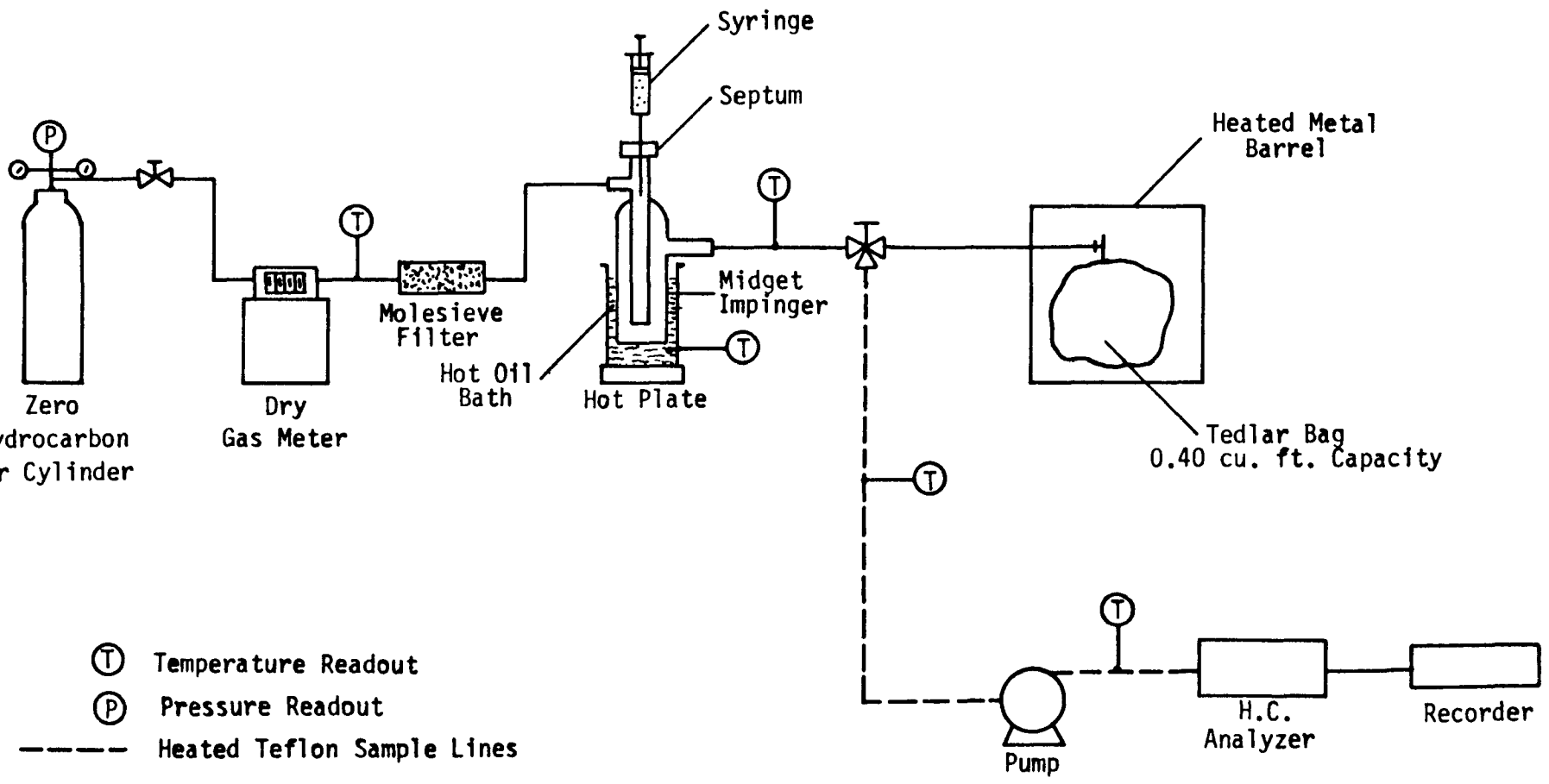

Figure B-1. Response Factor Preparation System.

Prior to each sample run the system should be purged, and after several sample runs the span calibration should be checked.

Materials used in the test system should be selected for their reliability and ability to deliver a non-degraded sample to the hydrocarbon analyzer.

A hydrocarbon analyzer should be used which employs the flame ionization method for determining hydrocarbons. A check on the Tedlar bag should be made for possible leakage by filling it until it becomes rigid and allowing it to stand for approximately 12 hours. At the end of this period, the bag should remain rigid, indicating that it is leak tight. The Teflon diaphragm pump and the dry gas meter should be tested for leaks before starting the tests. The syringe used for the petroleum solvent samples should be gas-tight to ensure that no loss of sample occurs. Both the zero and span calibration gases used on this hydrocarbon analyzer should be certified and traceable to NBS by the supplier.

For a typical sampling run, data would be recorded for the following components:

1. Dry gas meter temperature.
2. Dry gas meter volume.
3. Pressure drop across dry gas meter.
4. Oil bath temperature.
5. Temperature of heated lines.
6. Heated metal container temperature.
7. Barometric pressure.

After the readings are taken, a sample of petroleum solvent is injected into the impinger where it is vaporized. Immediately following vaporization, zero hydrocarbon air should be introduced at approximately 260 mmHg (5 pounds per square inch) of regulator pressure and 2.8 liters per minute (0.1 cubic feet per minute). When 9.9 liters per minute (0.35 cfm) are introduced into the system, the zero hydrocarbon air should be turned off. Before the zero hydrocarbon air is turned off, the valve on the Tedlar bag should be closed.

The next step is to record the dry gas meter volume reading. After the reading is obtained, the Tedlar bag contents should be completely extracted and delivered to the hydrocarbon analyzer. The results of the

hydrocarbon reading should be recorded, and then purging of the system begins in peparation for the next sample run.

The equations used in response factor preparation are given in Table B-1. It should be noted that properties peculiar to the solvent used (molecular weight and specific gravity) should be determined by consulting the solvent manufacturer.

Table B-1. EQUATIONS FOR CALCULATING SOLVENT-TO-PROPANE RESPONSE FACTOR

$$C_S = \frac{S\mu l \quad \frac{0.76\ mg}{\mu l} \quad \frac{10^3\ \mu g}{mg} \quad \frac{\mu g\ Mole}{138} \quad \frac{24.04\ \mu l}{\mu g\ Mole}\ 10^6}{V_m \quad Y \quad \frac{10^6\ \mu l}{1} \quad \frac{293}{T_m} \quad \frac{P_m}{760}} \qquad \text{Equation 1}$$

$$C_S = \frac{S\ (133.4)}{V_m \quad Y \quad \frac{293}{T_m} \quad \frac{P_m}{760}} \qquad \text{Equation 1a}$$

where C_S = Standard concentration in ppmv as solvent

C_p = standard concentration in ppmv as Propane

S = volume µl of solvent injected

V_m = gas volume measured by dry gas meter in liters

Y = dry gas meter calibration factor

P_m = absolute pressure of the dry gas meter, mmHg

T_m = absolute temperature of the dry gas meter, °K

0.76 = specific gravity of solvent at 293 °K

44 = molecular weight of Propane

138 = molecular weight of solvent

24.04 = ideal gas (specific volume) at 293 °K, 760 mmHg

Response ratio = $\frac{\text{response to } C_p}{\text{response to } C_S}$, where $C_p = C_S$

AMERICAN NATIONAL STANDARD ANSI/ASTM D 322 - 80

Designation: 23/68 (79)

Standard Test Method for GASOLINE DILUENT IN USED GASOLINE ENGINE OILS BY DISTILLATION[1]

This standard is issued under the fixed designation D 322, the number immediately following the designation indicates the year of original adoption or, in the case of revision, the year of last revision. A number in parentheses indicates the year of last reapproval. This is also a standard of the Institute of Petroleum issued under the fixed designation IP 23. The final number indicates the year of last revision.

This method was adopted as a joint ASTM-IP standard in 1964.

1. Scope

1.1 This method covers determination of the amount of dilution in crankcase oils of engines when gasoline has been used as the fuel.

1.2 The values stated in inch-pound units are to be regarded as the standard.

2. Applicable Documents

2.1 *ASTM Standard:*

D 484 Specification for Hydrocarbon Dry-cleaning Solvents[2]

3. Summary of Method

3.1 The sample, mixed with water, is placed in a glass still provided with a reflux condenser discharging into a graduated trap connected to the still. Heat is applied, and the contents of the still are brought to boiling. The diluent in the sample is vaporized with the water and then liquefied in the condenser. The diluent collects at the top of the trap, and the excess water runs back to the still where it is again vaporized, carrying over an additional quantity of diluent. The boiling is continued until all the diluent has been boiled out and recovered in the trap, and the volume is recorded.

4. Significance

4.1 Some fuel dilution of the engine oil may take place during normal operation. However, excessive fuel dilution is of concern in terms of possible performance problems.

5. Apparatus

5.1 *Flask*, round-bottom type as described in the Annex.

5.2 *Condenser*, Liebig straight-tube type, as described in the Annex.

5.3 *Trap*, constructed in accordance with the requirements in Figs. 1 and 2 and in the Annex.

5.4 *Heater*—Any suitable gas burner or electric heater may be used with the glass flask. (**Warning**—Hot exposed surface. See Annex A2.1.)

6. Procedure

6.1 Mix the sample thoroughly, measure 25 mL by means of a 25-mL graduated cylinder, and transfer as much as possible of the contents of the cylinder by pouring it into the flask. Wash the graduated cylinder with successive portions of hot water until only a negligible amount of oil is left in the cylinder. Add additional water to the flask to make a total of approximately 500 mL of water. Fill the trap with cold water and add 1 mL of ethanol to the water in the trap.

6.2 Assemble the apparatus as shown in Fig. 1, so that the tip of the condenser is directly over the indentation in the trap.

6.3 Apply heat (**Warning!** Hot exposed surface. See Annex A2.1) to the flask at such a rate that refluxing starts within 7 to 10 min after heat is applied, with the water and sample

---

[1] This method is under the jurisdiction of ASTM Committee D-2 on Petroleum Products and Lubricants.

In the IP, this method is under the jurisdiction of the Standardization Committee

Current edition effective Aug. 29, 1980 Published October 1980. Originally published as D 322 - 30. Last previous edition D 322 - 67 (1977).

[2] *Annual Book of ASTM Standards*, Part 23.

being at 21 to 38°C prior to application of heat. After boiling and condensation has commenced, adjust the rate of boiling so that condensed distillate is discharged from the condenser at a rate of 1 to 3 drops per s.

NOTE 1—Bumping with a tendency to froth over is often experienced with dirty oils. The use of "boiling stones," steel wool, or about 5 mL of concentrated hydrochloric acid (HCl) in the flask is often helpful in eliminating this difficulty.

6.4 Obtain readings of the amount of diluent at the following times, taken from the time that refluxing starts: 5, 15, and 30 min, and each 15 min following until the test is complete. Completion of the test shall be determined on the basis of either or both of the following criteria:

6.4.1 The test is complete when the volume of diluent increases by not more than 0.1 mL in any 15-min period during the course of the test.

6.4.2 The test is complete when the volume of diluent obtained in a given time indicates completion, as follows:

Time from Start of Refluxing	Test is Complete if Apparent Volume of Diluent Collected is Equal to or Less Than
5 min	no visible diluent[A]
30 min	2.0 mL
60 min	4.0 mL
90 min	5.0 mL

[A] Report as "no dilution"; otherwise the test should be continued at least 30 min

6.5 When the test continues without reaching the limit defined in 6.4.1, to a point at which any of the conditions described in 6.4.2 are encountered, the latter shall define the completion of the test.

6.6 When the test is complete by either of the criteria defined in 6.4.1 and 6.4.2, turn off the heat. Allow the equipment to stand at least 30 min to allow the distillate to settle clear and to cool to approximately room temperature. Read the volume of diluent collected in the trap. If the volume of diluent exceeds the calibrated capacity of the trap, discontinue the test and report the results as 20 % plus.

7. Calculations

7.1 The diluent content of the sample, expressed as volume percent, is equal to the volume of diluent in millilitres multiplied by 4.

NOTE 2—In some cases with samples containing large amounts of diluent, equipment limitations do not permit collection and measurement of the full 5 mL of diluent even when more is present. This condition exists when the upper limit of the collected diluent is above the zero calibration mark on the trap When it occurs, finish the test as prescribed in 6.6, read the maximum volume of diluent collected, calculate the corresponding percentage "*x*", and report the results as "*x* percent plus."

8. Report

8.1 Report the result as the Diluent Content, ASTM D 322 - IP 23.

9. Precision

9.1 The precision of the method as obtained by statistical examination of interlaboratory test results is as follows:

9.1.1 *Repeatability*—The difference between successive test results, obtained by the same operator with the same apparatus under constant operating conditions of identical test material, would in the long run, in the normal and correct operation of the test method, exceed the following value only in one case in twenty:

0.6 volume %.

9.1.2 *Reproducibility*—The difference between two single and independent results, obtained by different operators working in different laboratories on identical test material would in the long run, in the normal and correct operation of the test method, exceed the following value only in one case in twenty.

1.4 volume %

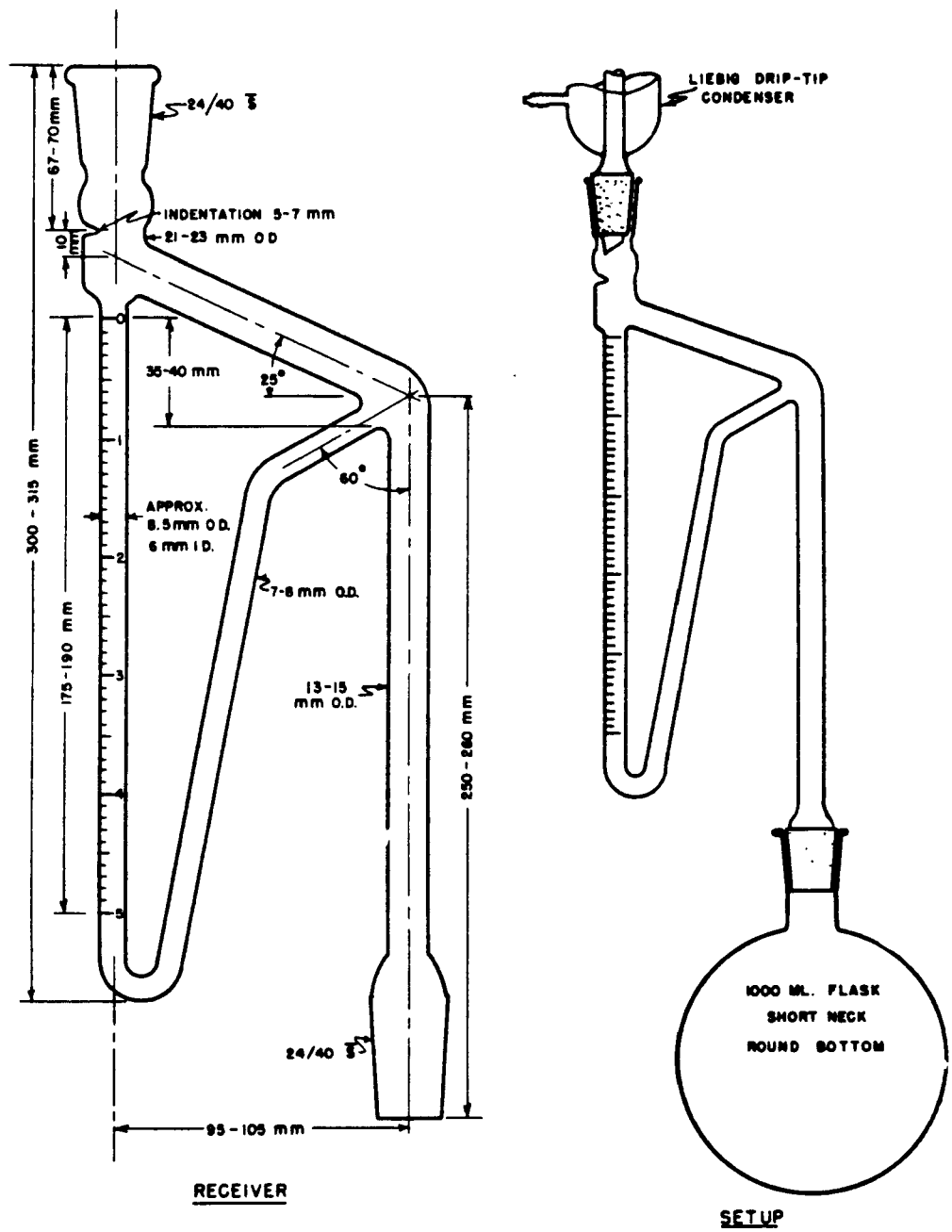

FIG. 1 Apparatus for Determining Diluent in Gasoline Engine Crankcase Oil

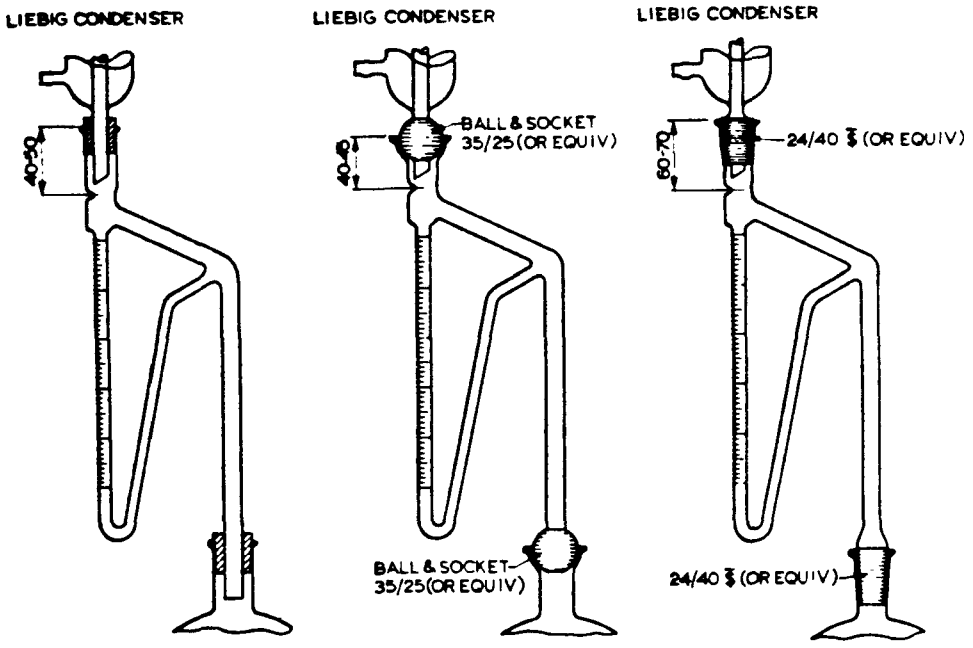

All dimensions are in millimetres

FIG. 2 Alternate Closures for Diluent Trap

ANNEX

A1. APPARATUS

A1.1 *Flask*, round-bottomed, short-necked, having a nominal capacity of litre Figures 1 and 2 show recommended designs and glass connections

A1.2 *Condenser*, Liebig straight type with a jacket not less than 400 mm long, and with an inner tube having an outside diameter of 10 to 13 mm Figures 1 and 2 show characteristic details of suitable condensers.

A1.3 *Trap*, in accordance with the details of construction shown in Figs. 1 and 2, and conforming to the following requirements It shall be graduated from 0 to 5 mL in 0.1-mL divisions It shall be calibrated at four or more points by first filling it with water and then adding Stoddard solvent or *n*-heptane from a standard buret having a calibrated capacity at least equal to that of the trap The Stoddard solvent should conform to Specification D 484 The *n*-heptane should conform to the current IP specification The error of the indicated volume shall not exceed 0.05 mL

A2. PRECAUTIONARY STATEMENT

A2.1 Warning:

There are exposed hot surfaces on the apparatus.

Avoid contact with exposed skin by using protective equipment as required

The American Society for Testing and Materials takes no position respecting the validity of any patent rights asserted in connection with any item mentioned in this standard Users of this standard are expressly advised that determination of the validity of any such patent rights, and the risk of infringement of such rights, are entirely their own responsibility

This standard is subject to revision at any time by the responsible technical committee and must be reviewed every five years and if not revised, either reapproved or withdrawn Your comments are invited either for revision of this standard or for additional standards and should be addressed to ASTM Headquarters. Your comments will receive careful consideration at a meeting of the responsible technical committee, which you may attend. If you feel that your comments have not received a fair hearing you should make your views known to the ASTM Committee on Standards, 1916 Race St., Philadelphia, Pa 19103, which will schedule a further hearing regarding your comments Failing satisfaction there, you may appeal to the ASTM Board of Directors

APPENDIX C
EMISSIONS FACTORS

APPENDIX C
EMISSIONS FACTORS

I. Introduction

The following emission factors and sample calculations are included to form a basis for the verification of VOC emissions inventories developed from emission source tests, plant site visits, permit applications, etc. These factors and procedures should not be applied in cases where site-specific data are available, but rather in instances where specific plant information is lacking or highly suspect. (See Table C-1 for emission reductions for model plants.)

II. VOC Emission Factors for Existing Equipment

Emission source	Range of emission rates (kg VOC per 100 kg dry weight of articles cleaned)	Nominal emission rates (kg VOC per 100 kg dry weight of articles cleaned)
Dryer	14-28	18
Filter		
Diatomite	(5-10)	8
Cartridge	(0.5-1)	1
Still	(1-7)	3
Fugitive sources	(0.5-1)	1
Total	(15.5-46)	22-30
Totals with		
Diatomite filter		30
Cartridge filter		23
Settling tanks		22

Table C-1. NOMINAL ANNUAL VOC EMISSIONS FOR TWO MODEL PLANTS EMPLOYING EXISTING AND RACT EQUIPMENT AND PROCEDURES

Type of plant	Plant throughput, kg/yr (lb/yr)	Nominal emission factors in kg VOC emitted per 100 kg dry weight of articles cleaned		Nominal VOC emissions, kg/yr (lb/yr)		Nominal annual VOC emission reductions resulting from RACT implementation, kg/yr (lb/yr)
		Existing equipment	RACT equipment	Existing equipment	RACT equipment	
Model plant I	182,000 (400,000)					
with existing:						
Diatomite filter		30	5.8	55,000 (120,000)	10,600 (23,000)	44,400 (98,000)
Cartridge filter		23	5.8	42,000 (92,000)	10,600 (23,000)	31.400 (69,000)
Settling tank		22	4.8	40,000 (88,000)	8,700 (19,200)	31,300 (68,800)
Model plant II	635,000 (1,400,000)	22	4.8	139,700 (307,000)	30,500 (67,000)	109,200 (240,000)

III. VOC Emission Factors for RACT Equipment

Emission source	Control technique	Range of emission rates (kg VOC/100 kg dry weight of articles cleaned)	Nominal emission rates (kg VOC/100 kg dry weight of articles cleaned)
Dryer	Recovery dryer	0.7-9.5	3.5
Diatomite filter	Cartridge filter	0.5-1.0	1.0
Vacuum still	No change	1.0-7.0	3.0
Fugitive	Improved operation	0.5-1.0	1.0
			7.5-8.5
Total Range		2.7-18.5	
	Totals with existing		
	Diatomite filter		8.5
	Cartridge filter		8.5
	Settling tank		7.5

IV. VOC Emission Factors as Applied to Model Plants

A. Sample Calculation, Model Plant II

1. Existing Equipment

a. Total Annual Weight of Clothes Cleaned

Number of Washer Loads Per Day X Average Weight of Clothing Per Load X Typical Operating Days Per Week X Typical Operating Weeks Per Year = Average Weight Cleaned Per Year

(14) X (180 kg) X (5 days/wk) X (52 wks/yr) = 635,000 kg/yr

b. Dryer Exhaust VOC Emissions

Standard Dryer Emission Rate X Annual Weight of Clothes Cleaned = Weight of VOC Emitted Per Year

$$\frac{18 \text{ kg VOC}}{100 \text{ kg Clothes Cleaned}} \times \frac{635{,}000 \text{ kg Clothes Cleaned}}{\text{per year}} =$$

114,300 kg VOC Per Year

c. Still Waste VOC Emissions

Vacuum Still Emission Rate X Annual Weight of Articles Cleaned = Weight of VOC Emitted Per Year

$$\frac{3 \text{ kg VOC}}{100 \text{ Kg Clothes Cleaned}} \times \text{635,000 kg Clothes Cleaned Per Year} =$$

19,050 kg VOC Per Year

d. Fugitive VOC Emissions

Fugitive Emission Rate X Annual Weight of Clothes Cleaned = Weight of VOC Emitted Per Year

$$\frac{1 \text{ kg VOC}}{100 \text{ kg Clothes Cleaned}} \times \text{635,000 kg Clothes Cleaned Per Year} =$$

6,350 kg VOC Per Year

e. Total Annual Plant VOC Emissions

Annual Emissions From Above Sources = Total Annual Plant VOC Emissions in kg/yr

(114,300 kg) + (19,050 kg) + (6,350 kg) = 139,700 kg

2. RACT Equipment (Model Plant II)

a. Dryer Exhaust VOC Emissions

RACT Dryer Control Emission Rate X Annual Weight of Clothes Cleaned = Weight of VOC Emitted Per Year

1. Recovery Dryer

$$\frac{3.5 \text{ kg VOC}}{100 \text{ kg Clothes Cleaned}} \times \text{635,000 kg Clothes Cleaned Per Year} =$$

22,225 kg VOC Per Year

b. Still Waste VOC Emissions

RACT Still Emission Rate X Annual Weight of Articles Cleaned = Weight of VOC Emitted Per Year

$$\frac{3 \text{ kg VOC}}{100 \text{ kg Clothes Cleaned}} \times \text{635,000 kg Clothes Cleaned Per year} =$$

19,050 kg VOC Per Year

c. Fugitive VOC Emissions

Fugitive Emission Rate X Annual Weight of Clothes Cleaned = Weight of VOC Emitted Per Year

$$\frac{1 \text{ kg VOC}}{100 \text{ kg Clothes Cleaned}} \times \text{635,000 kg Clothes Cleaned Per Year} =$$

6,350 kg VOC Per Year

d. Total Annual Plant VOC Emissions

Annual Emissions From Above Sources = Total Annual VOC Emissions in kg/yr

$$\frac{22{,}225 \text{ Kg}}{\text{yr}} + \frac{19{,}050 \text{ Kg}}{\text{yr}} + \frac{6{,}350 \text{ Kg}}{\text{yr}} = \frac{47{,}625 \text{ Kg}}{\text{yr}}$$

B. Plant VOC Emission Reduction Efficiency, Model Plant II

1. Total Annual Plant VOC Emission Reduction

Total Annual Emissions From Existing Equipment - Total Annual Emissions From RACT Equipment = Total Annual Emission Reduction

139,700 kg VOC per year - 47,625 kg VOC per year = 92,075 kg VOC per year

2. Percent Reduction in Total Plant VOC Emissions

Total Annual Emission Reduction ÷ Total Annual Emissions From Existing Equipment = Percent Reduction in Total Plant Emissions

92,075 kg VOC per year ÷ 139,700 kg VOC per year = 66%

V. Solvent Recovery, Model Plant II

A. Solvent Not Emitted = Solvent Recovered

B. Credit for Solvent Recovery

Total Annual Emission Reduction in kg VOC X Cost of Solvent Per kg = Credit for Recovery of Reduced Emissions in Dollars Per Year

92,075 kg VOC per year X $0.53 Per kg Solvent = $48,800.00 Per Year

APPENDIX D

COMMENTS RECEIVED ON THE NOVEMBER, 1981, DRAFT CTG

VICTOR ATIYEH
GOVERNOR

Department of Environmental Quality

522 S.W. 5th AVENUE, BOX 1760, PORTLAND, OREGON 97207

December 29, 1981

United States Environmental Protection Agency
Attn: Fred L. Porter
Emission Standards and Engineering Division (MD-13)
Research Triangle Park, N.C. 27711

Re: CTG Large Petroleum Dry Cleaners

Gentlemen:

Thank you for sending us a review copy of EPA's "Control of Volatile Organic Emissions from Large Petroleum Dry Cleaners", Draft CTG, November 1981.

We strongly believe that the CTG should have included a model rule. Equipment manufacturers are now facing a score of different state rules, in addition to many local air program control rules. A model rule would have given some commonality for the natural diversity that will likely follow. Even Regional EPA reviewers may have a difficult time reviewing state rules without an EPA model rule.

Enclosed is the South Coast Air Quality Management District's (Los Angeles) Rule 1102, which I hope you will add to your guideline document. I would tend to follow their lead, lacking your specific guidance.

Sincerely,

Peter B. Bosserman
Sr. Environmental Engineer

PBB:h

cc: Rentex, R. Barnard
EPA - Porter (2nd copy)

Rule 1102. Petroleum Solvent Dry Cleaners (Adopted January 6, 1978)
(Amended August 3, 1979) (Amended July 11, 1980)

(a) Effective March 7, 1978 a person shall not operate any dry cleaning equipment, which uses petroleum-based solvent unless:

(1) There is no liquid leaking from any portion of the equipment.

(2) All washer lint traps, button traps, access doors and other parts of the equipment where solvent may be exposed to the atmosphere are kept closed at all times except when required for proper operation or maintenance.

(3) The still residue is stored in sealed containers.

(4) The used filtering material is put into a sealed container immediately after removal from the filter or the dry cleaning system is equipped with one of the following filtering systems:

(A) Cartridge filters containing paper or carbon or a combination thereof, which are fully drained in the filter housing for at least 12 hours before removal.

(B) Diatomaceous earth filtering system, connected to a centrifugal solvent extractor or other device capable of removing sufficient solvent so that the remaining diatomaceous earth and soil does not contain more than 0.4 kilogram of solvent per kilogram of filter powder and soil removed (0.4 pounds per pound).

(C) Any other type of filtering system or process found by the Executive Officer to be equally effective.

(b) A person shall not operate any dry cleaning equipment which uses petroleum-based solvent unless all exhaust gases from drying tumblers and cabinets are vented through a carbon adsorber or other control device, or other methods are used to reduce the total emissions of hydrocarbon vapors to the atmosphere by at least 90 percent by weight.

(c) The provisions of Subsection (b) shall become effective in accordance with the following compliance schedule:

(1) Effective January 1, 1982, all petroleum solvent dry cleaning plants consuming more than 50,000 liters (13,209 gallons) of solvent per year shall comply with the provisions of section (b).

(2) Effective July 1, 1983, all petroleum solvent dry cleaning plants consuming more than 25,200 liters (6,657 gallons) of solvent per year shall comply with the provisions of section (b).

(3) Effective January 6, 1985 all petroleum solvent dry cleaning plants consuming more

than 10,000 liters (2,642 gallons) of solvent per year shall comply with the provisions of section (b).

(4) The solvent consumed by a petroleum solvent dry cleaning plant in a year, means the amount of solvent purchased for that year.

(d) Increments of Progress

In order to conform with the compliance dates specified in Subsection (c), an owner or operator of petroleum solvent dry cleaning equipment shall comply with the following increments of progress schedule:

(1) 12 months prior to the effective dates, submit to the Executive Officer an application for Permit to Construct, describing at a minimum, the steps that will be taken to achieve compliance with the provision of Subsection (b) of this rule. (2)

(2) 10 months prior to the effective dates, award the contract for the emission control system, or issue purchase orders for the component parts to accomplish emission control.

(3) 8 months prior to the effective dates, initiate on-site construction or installation of equipment to reduce or control emissions.

(4) Upon the effective dates, complete on-site construction or installation of equipment to reduce or control emissions, and assure final compliance with the provisions of Subsection (b) of this rule.

UNITED STATES ENVIRONMENTAL PROTECTION AGENCY
Region II

DATE 13 JAN 1982

SUBJECT Region II Comments on Draft Control Techniques Guidelines (CTG) Documents

FROM Jan N. Geiselman, Director
Air & Waste Management Division

TO Fred L. Porter, Assistant to the Director
Emission Standards and Engineering Division (MD-13)

The following are comments on two draft CTG documents which are being circulated for review:

A. Control of Fugitive VOC Emissions from Synthetic Organic Chemical, Polymer and Resin Manufacturing Equipment

1. The method used to correct a leak and the time required to do so, is dependent upon the type of component that is leaking. A leak in a packed seal may be repaired with much less difficulty than one in a mechanical seal. The action level and achievable emission reduction should reflect these differences. While an action level of 10,000 ppmv can be acceptable for a repair that can be completed in an hour, a higher action level can be acceptable for repairs that require the dismantling of a pump or a compressor. The required emission reduction should also be more substantial for the more complicated repair. This would assure that the proper repair (and not an ineffective temporary repair) is being made on the leaking component.

2. An exemption is recommended for small processes with less than 100 valves in gas or light liquid service. Due to the large number of processes that will be covered by these regulations such a broad exemption is unwise. In instances where highly toxic or odorous chemicals are involved this exemption should not be applicable.

B. Control of VOC Emissions from Large Petroleum Dry Cleaners

1. Is the reduction in or the reformulation of the aromatics content of petroleum solvents a likely method of reducing emissions? If so, is such a reduction in aromatics content effective when there is a corresponding reduction in solvent cleaning efficiency?

2. Shouldn't ranges of "acceptable" drying time and condenser temperature/flow (vapor and liquid) found during EPA test programs be matched up against load weight and fabric type in the recovery dryer? These factors would allow for a minimum solvent content in dried articles resulting in a maximum solvent recovery and a corresponding maximum VOC emission reduction.

EPA Form 1320-6 (Rev. 3-76)

3. EPA wished to evaluate the relationship between the flow rate of recovered solvent and the dryer emissions measured during the exhaust cycle; however, if difficulties associated with measuring high concentrations (false low readings, saturated instruments, etc.) of solvent in a vapor stream cast doubts on the validity of the obtained data, then why not analyze type of fabrics, load weights and recovery durations? It should be noted that a control option such as the cartridge filtration system is "sized" by its manufacturer, based on the dry-weight load capacity of the existing washer.

PATTON, BOGGS & BLOW
2550 M STREET, N. W.
WASHINGTON, D. C. 20037
(202) 457-6000

CABLE: BARPAT
TELECOPIER: 457-6315

WU TELEX: 89-452
ITT TELEX: 440324

JAMES R. PATTON, JR.
GEORGE BLOW
CHARLES OWEN VERRILL, JR.
JOSEPH L. BRAND
THOMAS HALE BOGGS, JR.
TIMOTHY J. MAY
HARRY A. INMAN
EDWARD T. MITCHELL
ELLIOT H. COLE
J. GORDON ARBUCKLE
WILLIAM C. FOSTER
DAVID C. TODD
LAWRENCE G. MEYER
RICHARD A. EARLE
ERNEST S. CHRISTIAN, JR.
ROBERT H. KOEHLER

E. BRUCE BUTLER
DAVID B. ROBINSON
JOHN H. VOGEL
ALLAN ABBOT TUTTLE
BART S. FISHER
JAMES G. O'HARA
JOHN L. OBERDORFER
LINDA ELIZABETH BUCK
LANNY J. DAVIS
DOMENICO DE SOLE
TIMOTHY A. VANDERVER, JR.
CHARLES B. TEMKIN
WILLIAM J. COLLEY
JOHN F. WOODS
TIMOTHY A. CHORBA
RONALD H. BROWN

OF COUNSEL
WILLIAM D. HATHAWAY
CHARLES D. COOK

DONALD A. LOFTY
SHAOUL ASLAN
MIDDLETON A. MARTIN
RICHARD S. CHARIN
GARRET G. RASMUSSEN
JAMES B. CHRISTIAN, JR
DAVID E. DUNN
RICHARD J. CONWAY
STEVEN M. SCHNEEBAUM
LEE M. GOODWIN
GREGORY K. PILKINGTON
MATTHEW J. ABRAMS
DON A. ALLEN
DUANE A. SILER
GARY L. STANLEY
RICHARD M. STOLBACH
PETER J. P. BRICKFIELD
JOE ROBERT REEDER
KATHARINE R. BOYCE
SCOTT NASON STONE
PETER J. WIEDENBECK
THOMAS D. ROBERTS

GEORGE M. BORABABY
JEANNE M. ROSLANOWI
STUART M. PAPE
JEFFREY T. SMITH
RONALD K. HENRY
GLENN R. THOMSON
RICHARD J. PARRINO
FRANK R. SAMOLIS
THOMAS R. GRAHAM
GEORGE J. SCHUTZER
MICHAEL D. ESCH
RONALD A. MILZER
RALPH G. STEINHARDT
JOHN C. HARRISON
ANDREW S. NEWMAN
CLAUDIA L. DEERING
HARVEY J. BAKER *
FRANK J. DONATELLI *
FLORENCE W. PRIOLEA
JONATHAN C. CARLSON
CLIFF MASSA III

* NOT ADMITTED IN D. C.

January 15, 1982

WRITER'S DIRECT DIAL

457-6075

Emission Standards & Engineering
Division (MD-13)
Environmental Protection Agency
Research Triangle Park, North Carolina
27711

Attention: Mr. Fred Porter

Dear Mr. Porter:

This responds to your letter of December 1, 1981 seeking comments on the draft document, Control of Volatile Organic Emissions from Large Petroleum Dry Cleaners. These comments are submitted on behalf of the dry cleaning industry and focus on the critical, unresolved issues presented by this draft. To some degree, these comments are repetitive of previous comments on behalf of the industry. Attached for your information are such comments by Mr. William Fisher of the International Fabricare Institute, Mr. Mervyn Sluizer of the Institute of Industrial Launderers, and me, to the National Air Pollution Techniques Advisory Commission last March.

There are a great number of detailed, technical comments that could be made on the draft document. However, we believe that the need for these comments would be obviated by our recommendations that EPA revise the draft document (1) to include a model regulation (as was done in the previous draft of this document); (2) to include an exemption level in the

model regulation (as was done in the previous draft) at the exemption level established in that draft; and (3) to revise the treatment of the issue of recovery dryer safety, including appropriately recognizing this issue in the model regulation. We believe that adoption of these recommendations will assure environmental improvement in a rational and cost-effective manner. Further, adoption of these recommended actions will provide adequate guidance to the states, which, in our view, the present draft does not. In the event that EPA does not accept these recommendations, however, we hereby request the opportunity to present our more detailed comments, mentioned above.

In our view, the most serious flaw in the draft document is the absence of a model regulation setting forth suggested requirements to impose on regulated facilities. We do not suggest that a model regulation would be appropriate or necessary for each guidance document prepared by EPA. Instead, our views are premised solely on the unique situation facing EPA, the states and the dry cleaning industry in developing SIP provisions applicable to petroleum dry cleaners. First, the requirement that SIP revisions be submitted to EPA by next spring creates time pressures which makes some guidance of this type a virtual necessity. Second, the combined impact of this time pressure and the need to develop regulatory provisions for a variety of industries will make it difficult, if not impossible, for at least some states to obtain the necessary knowledge and then draft regulations in the absence of any guidance as to the possible content of such regulations. Finally, the dry cleaning industry is composed primarily of very small operations. These companies have neither the time nor the ability to assist the states in an extensive regulatory development process. Accordingly, we believe that including a model regulation in the guidance document will be in the best interests of EPA, the states and the dry cleaning industry.

The elimination of the model regulations from this draft document is all the more surprising because there is no support in the record for such action. The speakers at the NAPTAC meeting on the previous draft of this document favored the inclusion of a model regulation. The only objection focussed on EPA's efforts to use model regulations as presumptive norms. This objection can be met by

language in the preamble such as the following:

> "This document includes a model regulation which is provided solely as guidance to assist state and local agencies in drafting their own specific RACT regulations. It is not a standard by which state and local RACT regulations will be judged and consequently is only illustrative in nature. Therefore, it is not to be construed as rule making by EPA."

Since, in our view, the record is bereft of support for elimination of a model regulation, such an exclusion would be arbitary and capricious. Accordingly, we urge that a model regulation be included in the final guidance document in substantially the same form as that in the previous draft of this document. That model should be modified in accordance with the discussion in the attached comments and the discussion below.

With respect to the materials included in the draft document, we note that it fails to point out the unique economic circumstances of the drycleaning industry. Although this shortcoming is ameliorated somewhat by the draft's focus on large petroleum drycleaners, a casual perusal of the cost analysis (Chapter 5) would suggest that the drycleaning industry has an unlimited financial capability to convert to whatever technology is ultimately defined as RACT. This is simply not correct, as EPA has recognized on other occasions. The October 23, 1981 draft New Source Performance Standard for petroleum drycleaners and the Background Information Document supporting the draft NSPS properly recognize the unique economic circumstances of the industry.

In order to correct this shortcoming in the draft document, an exemption (based on solvent consumption) from the requirement that a recovery dryer be installed should be included in the model regulation. This approach was adopted in the model regulation included in the previous draft document and should be followed in the final guidance document. Further, the exemption threshold should be set at the same level as in the previous draft.

Another critical issue concerns the safety of recovery dryers. At the outset, we emphasize our hope that recovery dryers prove completely safe. In addition to enabling the industry to reduce its emissions, the recovery dryer can contribute to the financial well-being of individual dry-

cleaners. As a result, it is apparent that this is the type of technology that the industry would favor if issues relating to safety can be resolved.

Despite the foregoing, it is not the role of the industry or of its representatives to ascertain the safety of recovery dryers. Nor, as EPA has recognized, is this a proper function of the Agency;

> "It is EPA's position that decisions on safety are entirely in the hands of safety officials and insurers, and EPA does not intend to require a device that is not fully accepted." October 23, 1981 draft NSPS, page 16.

We find the discussion of recovery dryer safety (§ 3.2 of the draft document) inadequate. It first notes that EPA's test equipment has been incapable of discerning whether the lower explosion limit (LEL) is reached or exceeded in the operation of this device. It then states that two recovery dryer explosions have been documented and attempts to minimize the significance of these explosions. This discussion improperly characterizes the risk involved since industry representatives have presented EPA with data concerning at least six explosions involving recovery dryers. The draft document next attempts to bolster this handling of the safety issue by referring to an analysis of the Japanese experience with recovery dryers. We have previously discussed the Japanese experience with EPA and its contractor and merely reiterate that this experience is largely inapplicable to the present situation.

Finally, the discussion of recovery dryer safety in the draft document concludes with an anecdotal survey which seeks to demonstrate that neither fire safety officials or insurance companies have problems with recovery dryers. Obviously, such a survey cannot determine the reactions of all fire safety officials or insurance companies to the recovery dryer safety issue. Therefore, we suggest that adequate recognition be accorded to those fire safety officials and insurance companies who may not believe that these devices are safe. The most appropriate manner of doing this is to include in the model regulation a recommendation to consult with fire safety officials and insurance

companies in developing SIP revisions. In order to accomplish this, language such as the following should be inserted in the model regulations:

> Insert the following language in the preamble to the model regulation:
>
> "Concern has been expressed that the requirement for installation and operation of solvent recoverydryers could conflict with local fire safety codes or creates situations in which petroleum dry cleaning plants could not be insured. Even though Factory Mutual has certified the one U.S.-made recovery dryer, agencies should ascertain whether this is sufficient in their state or locality. In order to do this appropriate fire safety officials and insurance industry representatives should be involved early in the process of developing the RACT regulations. In the event that such obstacles cannot be resolved, the recovery dryer requirements should be deleted."

We also suggest that the following language be added in the body of the model regulation to provide a limited exemption for situations where either fire safety officials or insurance companies do not feel the device to be safe:

> Add a new provision in the model regulation as follows:
>
> "The District may exclude plants from the scope of the recovery dryer requirements if the owner or operator can demonstrate that installation of a solvent recovery dryer would not be in conformity with applicable fire safety regulations or would cause a situation in which obtaining fire insurance would be infeasible."

Although we understand that EPA does not favor the addition of such language, we suggest that it is warranted in order to deal wth those rare situations in which a problem exists. The foregoing language has been carefully drafted to narrowly limit the possible applicability of this exemption.

If the draft document is revised in accordance with the foregoing recommendations, we believe that it

will be a significant step toward the objective of reducing emissions in a cost-effective and rational fashion. If there are any questions about the foregoing comments, please do not hesitate to contact me.

Sincerely,

Timothy A. Vanderver, Jr.

TAV/llr

Chevron

Chevron Research Company
A Standard Oil Company of California Subsidiary
576 Standard Avenue, Richmond, CA 94802

R. G. Anderson
Vice-President

March 1, 1982

Mr. James F. Durham
Emission Standards and Engineering Division
U. S. Environmental Protection Agency
Research Triangle Park, N.C. 27711

Dear Mr. Durham:

We have reviewed the EPA Control Technique Guideline for "Control of Volatile Organic Emissions from Large Petroleum Dry Cleaners." In a telephone conversation with Mr. W. H. Ellis of our company, on February 26, 1982, Mr. Robert Walsh asked that our comments be referred to you.

We have detected a problem with Table 2-1, which tabulates physical properties of dry cleaning solvents. One of the products listed is Chevron 450 solvent, which is a highly purified kerosene not normally used for dry cleaning. We believe a better choice would be Chevron thinner 410B, which is a 140°F material.

Chevron 325 solvent is our basic Stoddard solvent; it is also listed in the table.

Enclosed are current data sheets for Chevron 325 solvent and Chevron thinner 410B.

If you have any questions, please phone Mr. William H. Ellis at (213) 615-5212.

Yours truly,

R.G. ANDERSON

William H. Ellis

by WILLIAM H. ELLIS

WHEllis:mp

Chevron Research Company
A Standard Oil Company of California Subsidiary
324 El Segundo Boulevard, El Segundo, CA 90245

CHEVRON 325 SOLVENT
Typical Properties

Gravity, °API		47.7
Gravity, Specific at 60°F		0.7896
Pounds Per Gallon at 60°F		6.57
Flash Point TCC °F		105
Flash Point TOC °F		118
Aniline Point °F		145.2
Kauri Butanol Value		35.9
Reid Vapor Pressure, Lbs.		0.1
Threshold Limit Value, ppm		250
Explosive Limits, Volume % in Air	lower	1.0
	upper	6.0
Composition - Volume %		
Benzene		0.02
Toluene/Ethylbenzene		0
Xylene & C_8 + Aromatics		0.0/2.4
Naphthenes		62.2
Paraffins		35.4
Color Saybolt		+30
Distillation, D-86, °F		
Initial Boiling Point		320
10% Recovered		327
50% "		335
70% "		341
90% "		352
Dry Point		368
End Point		370
Spontaneous Ignition Temperature °F		500
Freezing Point °F		-100
Molecular Weight, Average		138
Solubility Parameter		7.5
Refractive Index 20°C		1.4340
Thermal Conductivity, 60°F BTU/HR/FT/Deg F		0.086
Heat of Vaporization, BTU/Lb.		119
Heat of Combustion, BTU/Lb.		18720

2-82

Chevron Research Company
A Standard Oil Company of California Subsidiary
324 El Segundo Boulevard, El Segundo, CA 90245

CHEVRON THINNER 410B
Typical Properties

Gravity, °API	42.3
Gravity, Specific at 60°F	0.8140
Pounds Per Gallon at 60°F	6.78
Flash Point TCC °F	142
Flash Point TOC °F	158
Aniline Point °F	147.4
Kauri Butanol Value	35.8
Reid Vapor Pressure, Lbs.	<0.1
Threshold Limit Value, ppm	275
Explosive Limits, Volume % in Air — lower	0.9
Explosive Limits, Volume % in Air — upper	4.9
Composition - Volume %	
Benzene	< 0.02
Toluene/Ethylbenzene	0
Xylene & C_8 + Aromatics	0.0/2.8
Naphthenes	60.6
Paraffins	36.6
Color Saybolt	+30
Distillation, D-86, °F	
Initial Boiling Point	370
10% Recovered	378
50% "	383
70% "	387
90% "	395
Dry Point	406
End Point	409
Spontaneous Ignition Temperature °F	490
Freezing Point °F	-69
Molecular Weight, Average	157
Solubility Parameter	7.2
Refractive Index 20°C	1.4456
Thermal Conductivity, 60°F BTU/HR/FT/Deg F	0.084
Heat of Vaporization, BTU/Lb.	112
Heat of Combustion, BTU/Lb.	18660

2-82

APPENDIX E
EXAMPLE REGULATION

APPENDIX E

EXAMPLE REGULATION FOR THE CONTROL OF VOLATILE ORGANIC COMPOUND EMISSIONS FROM LARGE PETROLEUM DRY CLEANERS

The petroleum dry cleaning industry and the State of Oregon recommended that a model or example regulation be included in the control technique guideline (CTG) document. While EPA did not include an example regulation in the draft CTG, industry and State recommendations warrant inclusion of an example regulation, which has been prepared and is presented in this appendix.

The example regulation is based on a "presumptive norm" which is considered broadly representative of RACT for the petroleum dry cleaning industry. The example regulation is included solely as guidance to assist State and local agencies in drafting their own specific RACT regulations.

The example regulation should not be interpreted or construed as being the only regulation for petroleum dry cleaning that will be acceptable to EPA as a part of the State Implementation Plan. Other regulations that can be demonstrated to represent reasonably available control technology (RACT) would be equally acceptable.

Industry representatives have expressed concern that the requirement for installation and operation of solvent recovery dryers could conflict with local fire safety codes or create situations in which petroleum dry cleaning plants could not be insured. Even though Factory Mutual has certified the one U.S.-made recovery dryer, agencies should ascertain whether this is sufficient in their state or locality. Although EPA has found no instances in which a fire marshal or insurance underwriter prohibited the installation of a solvent recovery dryer, appropriate fire safety officials and insurance industry representatives should be

involved early in the process of developing the RACT regulations. In the event that such obstacles cannot be resolved, the recovery dryer requirements should be deleted.

EXAMPLE REGULATION

§XX.010 Applicability.

(A) This Regulation applies to petroleum solvent washers, dryers, solvent filters, settling tanks, vacuum stills, and other containers and conveyors of petroleum solvent that are used in petroleum solvent dry cleaning facilities.

(B) This Regulation applies to all petroleum solvent dry cleaning facilities described in §XX.010(A) that consume 123,000 liters or more of petroleum solvent annually.

(C) This Regulation applies to all petroleum solvent dry cleaning facilities described in §XX.010(A) and (B) located in the following areas:

---

§XX.020 Definitions.

(A) Except as otherwise required by the context, terms used in this Regulation are defined in the General Statutes, the General Provisions, or in this section as follows:

"Cartridge filter" means perforated cannisters containing filtration paper and/or activated carbon that are used in a pressurized system to remove solid particles and fugitive dyes from soil-laden solvent.

"Containers and conveyors of solvent" means piping, ductwork, pumps, storage tanks, and other ancillary equipment that are associated with the installation and operation of washers, dryers, filters, stills, and settling tanks.

"Dry cleaning" means a process for the cleaning of textiles and fabric products in which articles are washed in a nonaqueous solution (solvent) and then dried by exposure to a heated air stream.

"Perceptible leaks" means any petroleum solvent vapor or liquid leaks that are conspicuous from visual observation; such as pools or droplets of liquid, or buckets or barrels of solvent or solvent-laden waste standing open to the atmosphere.

"Petroleum solvent" means organic material produced by petroleum distillation comprising a hydrocarbon range of 8 to 12 carbon atoms per organic molecule that exists as a liquid under standard conditions.

"Solvent recovery dryer" means a class of dry cleaning dryers that employs a condenser to liquify and recover solvent vapors evaporated in a closed-loop, recirculating stream of heated air.

"Volatile organic compounds" means any organic compound that participates in atmospheric photochemical reactions or is measured by a State or EPA test method.

§XX.030 Standards.

(A) Each owner or operator of a petroleum solvent dry cleaning dryer shall either:

(1) Limit VOC emissions to the atmosphere to an average of 3.5 kilograms of volatile organic compounds per 100 kilograms dry weight of articles dry cleaned, or

(2) Install and operate a solvent recovery dryer in a manner such that the dryer remains closed and the recovery phase continues until a final recovered solvent flow rate of 50 milliliters per minute is attained.

(B) Each owner or operator of a petroleum solvent filtration system shall either:

(1) Reduce the volatile organic compound content in all filtration wastes to 1.0 kilogram or less per 100 kilograms dry weight of articles dry cleaned, before disposal, and exposure to the atmosphere, or

(2) Install and operate a cartridge filtration system, and drain the filter cartridges in their sealed housings for 8 hours or more before their removal.

(C) Each owner or operator shall repair all petroleum solvent vapor and liquid leaks within 3 working days after identifying the sources of the leaks. If necessary repair parts are not on hand, the owner or operator shall order these parts within 3 working days, and repair the leaks no later than 3 working days following the arrival of the necessary parts.

§XX.040 Testing and monitoring.

(A) To be in compliance with §XX.030(A)(1) any person shall:

(1) Calculate, record, and report to the Director the weight of volatile organic compounds vented from the dryer emission control device calculated by using EPA Reference Test (40 CFR, Part 60) Methods 1, 2, and 25A, with the following specifications:

(a) Field calibration of the flame ionization analyzer with propane standards, and

(b) Laboratory determination of the ratio of the flame ionization analyzer response to a given parts per million by volume concentration of propane to the response to the same parts per million concentration of the volatile organic compounds to be measured, and

(c) Determination of the weight of volatile organic compounds vented to the atmosphere by:

(i) the multiplication of the ratio determined in §XX.040 (A)(1)(b) by the measured concentration of volatile organic compound gas (as propane) as indicated by the flame ionization analyzer response output record, and

(ii) the conversion of the parts per million by volume value calculated in §XX.040 (A)(1)(c)(i) into a mass concentration value for the volatile organic compounds present, and

(iii) multiply the mass concentration value calculated in §XX.040 (A)(1)(c)(ii) by the exhaust flow rate determined by using EPA Reference Test Methods 1 and 2.

(2) Calculate, record, and report to the Director the dry weight of articles dry cleaned.

(3) Repeat §XX.040 (A)(1) and (2) for normal operating conditions that encompass at least 30 dryer loads, which total not less than 1,800 kg dry weight, and represent a normal range of variations in fabrics, solvents, load weights, temperatures, flow rates, and process deviations.

(B) To determine compliance with §XX.030 (A)(2), the owner or operator shall verify that the flow rate of recovered solvent from the solvent recovery dryer at the termination of the recovery phase is no

greater than 50 milliliters per minute. This one-time procedure shall be conducted for a duration of no less than two weeks during which no less than 50 percent of the dryer loads shall be monitored for their final recovered solvent flow rate. The suggested point for measuring the flow rate of recovered solvent is from the solvent-water separator. Near the end of the recovery cycle, the flow of recovered solvent should be diverted to a graduated cylinder. The cycle should continue until the minimum flow of solvent is 50 milliliters per minute. The type of articles cleaned and the total length of the cycle should then be recorded.

(C) To be in compliance with §XX.030 (B)(1) any person shall:

(1) Calculate, record, and report to the Director the weight of volatile organic compounds contained in each of at least five one-kilogram samples of filtration waste material taken at intervals of at least 1 week, by employing ASTM Method D322-80 (Standard Test Method for Gasoline Dilutent in Used Gasoline Engine Oils by Distillation).

(2) Calculate, record, and report to the Director the total dry weight of articles dry cleaned during the intervals between removal of filtration waste samples, as well as the total mass of filtration waste produced in the same period.

(3) Calculate, record, and report to the Director the weight of volatile organic compounds contained in filtration waste material per 100 kilograms dry weight of articles dry cleaned.

(D) Compliance with §XX.030(C) requires that each owner or operator make weekly inspections of washers, dryers, solvent filters, settling tanks, vacuum stills,. and all containers and conveyors of petroleum solvent to identify perceptable volatile organic compound vapor or liquid leaks.

(E) To be in compliance with §XX.030 any person can use an equivalent test procedure or method provided that this method or procedure has been previously approved by the Director.

§XX.050 Compliance schedules.

(A) The owner or operator of a petroleum solvent dry cleaning facility subject to this regulation shall meet the applicable stages of progress contained in the following schedule:

(1) Submit to the Director final plans for the emission control equipment _____ (3 months after implementation of the regulation).

(2) Award contracts for the emission control equipment _____ (2 months after the final submission of the control equipment plans).

(3) Complete onsite construction or installation of the emission control equipment _____ (12 months after award of the contract).

(4) Achieve final compliance with the regulation _____ (2 months after installing the control equipment).

(5) In the event that the control equipment cannot be delivered within 12 months after award of the contract, and the owner or operator placed the order within the required time, the final compliance date shall be 3 months following delivery of the equipment.

DISCUSSION

Enforcement and compliance verification procedures associated with the model regulation would rely on visual inspection of all affected facility components. This section includes a discussion of the enforcement approaches for a VOC emissions regulation based on RACT.

The determination of the annual solvent consumption of individual petroleum dry cleaning plants should be based on the plants' records of total solvent purchases over the latest 12 month period. Records of these purchases should be readily available at the individual plant, and questionable or incomplete solvent purchase data could be verified through solvent suppliers' sales records.

Dryers

As discussed earlier in the preamble of the example regulation, insurance and fire prevention representatives should be contacted at an early stage of the regulatory development to insure that there are no problems in acceptance of the recovery dryer by these agencies.

The availability of domestically produced recovery dryers could strongly influence the enforcement of a RACT regulation. Currently, there is only one manufacturer of recovery dryers in the United States,

and the lag time between order placement and dryer delivery may be a problem. However, the recovery dryer manufacturer has stated that the production facility is being expanded and that projected demand for the dryer will be met. In order to accommodate any possibility of delays in dryer delivery, the model regulation contains a provision §XX.050 (A)(5) that would postpone the compliance deadline for control equipment not delivered within 12 months of ordering to 3 months after its delivery.

Recovery dryer emissions reduction performance would be determined by observing the maximum final recovery rate (50 milliliters per minute) which defines a minimum time that the dryer must operate to ensure sufficient recovery of the solvent evaporated from the drying articles. Recovery dryer maximum final recovered solvent flow rate should be monitored frequently during the initial two-week period of recovery dryer operation following installation. This procedure is intended to familiarize the operator with the effects of variations in load weight, fabric type, and ambient (air and water) temperatures on the emission reduction and recovery performance of the dryer. No further monitoring is recommended because such monitoring would be impracticable. It is recommended, however, that records of the initial recovered solvent flow rate monitoring be kept as a reference to the affects of variations in loading and operating parameters on the recovery cycle duration in a given plant.

Application of carbon adsorption technology to standard dryer VOC emissions may be possible. Although an analysis of the only current application of this technique has shown that it is less effective in reducing overall dryer VOC emissions, modifications to the system could result in equivalence with the recovery dryer. For example, a substantial increase in the mass of activated carbon available for adsorption could result in sharply reduced adsorber exhaust VOC concentrations. Also, a decrease in the flow rate of the vapor through the system would increase the VOC adsorption by the carbon.

As discussed in the model regulation, equivalent systems of dryer VOC emission control will be permitted, if approved by the Director and the equivalence demonstration test is performed using test methods or

procedures that have been previously approved by the Director. Verification of the compliance of a dryer emission control device other than the recovery dryer would be based on a one-time test of the maximum dryer VOC mass emissions per unit mass of articles cleaned after installation of the alternative control device. The determination of this mass emission rate would require the use of EPA Reference (40 CFR Part 60) Test Methods 1, 2, and proposed 25A (45 FR 83126 December 17, 1980). While Methods 1 and 2 would govern the selection of atmospheric vapor exhaust sampling points and the procedure for determining the exhaust flow rate, respectively, Method 25A (discussed below) would govern the measurement of the VOC (as propane) vapor concentrations in the control device atmospheric exhaust by a flame ionization analyzer (FIA). First, a response ratio of the FIA's measurement of a given concentration of propane to the same concentration of VOC (solvent) would be determined in the laboratory. Then the FIA would be field calibrated to measure concentrations of propane gas, and the measured ppmv concentrations (as propane) of the control device exhaust gases would be multiplied by the previously determined response ratio, thereby determining the ppmv concentration (as solvent) of the VOC emissions. Then by calculation, one would convert the VOC concentration by volume (ppmv) to mass concentration. This procedure should be carried out under various conditions of fabric type, load weight, and temperatures that are typical of the range encountered in the dry cleaning industry. The results of this procedure should be reported as kilograms VOC emitted per 100 kilograms dry weight of articles dry cleaned. Compliance would be established if the average (over the test period) VOC mass emissions per 100 unit mass of articles cleaned did not exceed 3.5. Subsequent changes in the design or performance of the control device could necessitate a reevaluation of the device's maximum VOC emissions. Since Method 25A is not a promulgated EPA Reference Test Method (as of the date of this appendix) and subject to change an alternative test procedure can be used in the interim. One alternate test method is: "Alternate Test Method For Direct Measurement of Total Gaseous Compounds Using A Flame Ionization Analyzer," presented in the OAQPS Guideline Series document

entitled, "Measurement of Volatile Organic Compounds" (Revised September 1979, EPA-450/2-78-041). Other equivalent test methods and procedures are allowed under §XX.040 (E) provided that these methods or procedures have been approved by the Director.

Filters

Verification of compliance with the section of the regulation governing solvent filters would be based on visual observation of the proper installation, operation, and maintenance of a cartridge filtration system. The manufacturer's manual for the particular system should be consulted for proper procedures, sizing of connections, and parameters requiring inspection or monitoring to ensure proper operation. The operator's familiarity with the system's performance, safety, and maintenance requirements should be evaluated as an important aspect of overall compliance.

Plant records detailing the date and time of cartridge replacements could be used to verify compliance with the mandated 8-hour minimum drainage time. If these records are lacking, and there is some suspicion that the cartridges are being drained improperly, it may be necessary to require valid proof of compliance by proper record keeping over a specified period.

As stated in reference to equivalent systems for dryer emission controls, equivalent systems for control of VOC emissions from solvent filters can be approved by the Director. A solvent filtration system VOC emissions control device other than the cartridge filter would require a one-time verification of its compliance with maximum emissions (solvent content of waste) of no more than 1.0 kilograms VOC per 100 kilograms dry weight of articles dry cleaned prior to its use in a petroleum dry cleaning facility. The testing procedure would be based on the determination of the VOC (solvent) content in each of five one-kilogram samples of filtration waste from the control device taken over one-week intervals during which conditions of soil loading, load weight, and fabric type vary in a manner typical of the facility. ASTM Test Method D322-80 (Gasoline Dilutent in Used Gasoline Engine Oil by Distillation) should be used to determine the solvent content of each

sample. The total masses of articles cleaned and filtration waste generated between waste samplings should be recorded and multiplied by the sample ratio of solvent-to-waste content (as determined by the ASTM Method), resulting in a determination of the mass of VOC emitted (solvent generated) per 100 unit mass of articles dry cleaned. The compliance verification resulting from this equivalence test would apply only to the existing control device configuration, and would be invalidated by significant changes in the design or performance of the device.

Fugitive Emissions

Location of fugitive emission sites would rely on a visual inspection of the overall dry cleaning system components which include washers, dryers, solvent filters, settling tanks, and all containers and conveyors of petroleum solvent. Sources of VOC liquid leaks would be identified directly, and the operation and maintenance of devices known to be sources of VOC vapors would be evaluated.

Dry cleaning system components found leaking liquid solvent should be repaired immediately. Pipes, hoses, and fittings should be examined for active dripping or dampness. Pumps and filters should be closely inspected for leaks around seals and access covers. In general, there should be no visible signs of liquid solvent.

Solvent vapor leaks should be controlled by reducing the number of sources where solvent is exposed to the atmosphere. Under no circumstances should there be any open containers (cans, buckets, barrels) of solvent or solvent-containing material. Equipment containing solvent (washers, dryers, extractors, and filters) should remain closed at all times other than during maintenance or load transfer. Lint filter and button trap covers should remain closed except when solvent-laden lint and debris are removed. Gaskets and seals should be inspected and replaced when found worn or defective. Solvent-laden clothes should never be allowed to sit exposed to the atmosphere for longer periods than are necessary for load transfers. Finally, vents on solvent-containing waste and new solvent storage tanks should be constructed and maintained in a manner that limits solvent vapor emissions to the maximum possible extent.

TECHNICAL REPORT DATA
(Please read Instructions on the reverse before completing)

1. REPORT NO. EPA-450/3-82-009	2.	3. RECIPIENT'S ACCESSION NO.
4. TITLE AND SUBTITLE Control of Volatile Organic Compound Emissions from Large Petroleum Dry Cleaners		5. REPORT DATE SEPTEMBER 1982
		6. PERFORMING ORGANIZATION CODE
7. AUTHOR(S)		8. PERFORMING ORGANIZATION REPORT NO.
9. PERFORMING ORGANIZATION NAME AND ADDRESS TRW Environmental Engineering Division, Progress Center, Post Office Box 13000, Research Triangle Park, North Carolina 27709		10. PROGRAM ELEMENT NO.
		11. CONTRACT/GRANT NO. 68-02-3174
12. SPONSORING AGENCY NAME AND ADDRESS U.S. Environmental Protection Agency, Emission Standards and Engineering Division (MD-13), Office of Air Quality Planning and Standards, Research Triangle Park, North Carolina 27711		13. TYPE OF REPORT AND PERIOD COVERED Final
		14. SPONSORING AGENCY CODE EPA 200/04

15. SUPPLEMENTARY NOTES

16. ABSTRACT

This report provides the necessary guidance for development of regulations to limit emissions of volatile organic compounds (VOC) from large dry cleaning plants using petroleum solvents. This guidance includes emission estimates, control technologies, costs, environmental effects and enforcement; for the development of reasonable available control technology.

17. KEY WORDS AND DOCUMENT ANALYSIS

a. DESCRIPTORS	b. IDENTIFIERS/OPEN ENDED TERMS	c. COSATI Field/Group
Air Pollution Regulatory Guidance Dry Cleaning Petroleum Solvents	Air Pollution Control Stationary Sources Volatile Organic Compounds	

18. DISTRIBUTION STATEMENT Unlimited	19. SECURITY CLASS *(This Report)* Unclassified	21. NO. OF PAGES 166
	20. SECURITY CLASS *(This page)* Unclassified	22. PRICE

EPA Form 2220-1 (Rev. 4-77) PREVIOUS EDITION IS OBSOLETE