United States
Environmental Protection
Agency

Control Technology
Center
Research Triangle Park NC 27711

EPA-450/3-87-022
October 1987

EPA

Evaluation of Potential Emissions of TDI from Two Facilities

control technology center

EPA-450/3-87-022

EVALUATION OF POTENTIAL EMISSIONS OF TDI FROM TWO FACILITIES

CONTROL TECHNOLOGY CENTER

SPONSORED BY:

Emission Standards and Engineering Division
Office of Air Quality Planning and Standards
U.S. Environmental Protection Agency
Research Triangle Park, NC 27711

Air and Energy Engineering Research Laboratory
Office of Research and Development
U.S. Environmental Protection Agency
Research Triangle Park, NC 27711

Center for Environmental Research Information
Office of Research and Development
U.S. Environmental Protection Agency
Cincinnati, OH 45268

October 1987

NOTICE

This report was prepared by Radian Corporation, Research Triangle Park, NC. It has been reviewed for technical accuracy by the Emission Standards and Engineering Division of the Office of Air Quality Planning and Standards, U.S. Environmental Protection Agency, and approved for publication. Mention of trade names or commercial products is not intended to constitute endorsement or recommendation for use.

ACKNOWLEDGEMENT

This report was prepared for the Control Technology Center by Andrew J. Miles of Radian Corporation. The EPA project officer was Robert E. Rosensteel of the Office of Air Quality Planning and Standards. Also serving on the EPA project team was T. Kelly Janes of the Air and Energy Engineering Research Laboratory.

TABLE OF CONTENTS

Section		Page
	Summary	S-1
1.0	Introduction	1-1
	1.1 Scope	1-1
	1.2 Overview	1-1
2.0	Hazard Evaluation	2-1
	2.1 Physical and Chemical Properties of TDI	2-1
	2.2 Potential for Sudden and Accidental Releases	2-5
	2.2.1 General Considerations	2-5
	2.2.2 TDI Users	2-6
	2.3 Process Evaluation	2-8
3.0	Facility Visits	3-1
	3.1 Plant Visit #1	3-1
	3.2 Plant Visit #2	3-14

LIST OF TABLES

Number		Page
1-2	Physical Properties of TDI	2-2
2-2	Example Method for Preliminary Hazard Evaluation at a Facility	2-7
2-3	Example of Factors Affecting Process Hazards	2-10
2-4	Ranking of Probability of Release	2-11

LIST OF FIGURES

Number		Page
2-1	Diagram of Vapor Pressure for Toluene Diisocyanate	2-3
3-1	Diagram of Pruett-Schaffer Facility	3-3
3-2	Schematic Drawing of the Pruett-Schaffer TDI Process	3-4
3-3	Schematic Drawing of the Scrubber	3-7
3-4	Diagram of Raw Material Storage Areas	3-9
3-5	Suggested Hood Designs	3-13
3-6	Schematic Drawing of Urethane Alkyds Process at PPG	3-16

SUMMARY

This report summarizes the technical assistance provided to the Allegheny County health Department (ACHD) by the Control Technology Center (CTC). The request by the ACHD was to examine potential air impacts from facilities using toluene diisocyanate in their manufacturing processes. The CTC group was composed of Robert Rosensteel of the Office of Air Quality Planning and Standards, Kelly Janes of Air and Energy Engineering Research Laboratory, and Andrew Miles of Radian Corporation.

1.0 INTRODUCTION

1.1 SCOPE

The Control Technology Center (CTC) was established by the Environmental Protection Agency's (EPA) Office of Research and Development and the Office of Air Quality Planning and Standards to assist State and local air pollution control agencies in the implementation of their air toxics and other pollution control programs. Three levels of assistance can be accessed through the CTC. First, a CTC HOTLINE has been established to provide telephone assistance on matters relating to air pollution control technology. Second, more in-depth engineering assistance can be provided when appropriate. Third, the CTC can provide technical guidance through publication of technical guidance documents, development of personal computer software, and presentation of workshops on control technology matters.

This document reports the results of direct engineering assistance provided by the CTC for the Allegheny County Health Department (ACHD). The scope of the assistance was determined by the specific needs of the county and the findings presented in this report may not be applicable to other facilities and operations which were not visited. Also, control technology presented in this document is not necessarily endorsed by EPA for establishment of the basis for regulations, since the decision of whether or not to regulate a source category and the selection of the technology on which to base regulations are responsibilities of the individual State or local authorities. This document is, however, intended to provide technical information which may assist in making such decisions.

1.2 OVERVIEW

This report summarizes and presents the results of the plant visits made by the CTC team to two toluene diisocyanate (TDI) user facilities in Allegheny County, Pennsylvania. The purpose of the visit was to examine potential ambient air impacts from facilities using TDI in their production

processes. ACHD headquarters was visited also to gather background infomation and to discuss the five existing and one proposed TDI user facilities in the county.

The five TDI users in Allegheny County and one potential new user are listed below.

	Annual Usage, lbs.*	Maximum Quantity Stored On-Site, lbs.*
Pruett-Schaffer Chemical Company	460,000	90,000
Koppers Company, Inc. (potential new source in county)	350,000	60,000
PPG Industries, Inc.	71,350	20,340
Mobay Chemical Corporation	27,500	1,800
Puritan Paint and Oil	5,000	1,000
Mine Safety Appliance	1	------
	913,851	173,140

Each of the facilities listed was briefly discussed with ACHD personnel to determine which facilities were of most concern and should be surveyed. Following these discussions the decision was made to visit the Pruett-Schaffer facility, the largest TDI user identified in the county. Also, if time permitted, it was decided to visit the PPG Industries facility, a well controlled facility, according to ACHD personnel, with which they had no major concerns. Subsequently, visits were made to these two facilities to gather site-specific information and to identify potential sources of emissions under routine and non-routine conditions. During the course of the visits, several recommendations were made which may have been outside the usual authority of the Bureau of Air Pollution Control. These recommendations generally are in the area of worker safety or spill control.

The remainder of this report is organized as follows. Section 2.1 presents the general approach to hazardous identification of chemical facilities and Section 2.2 discussed one TDI/polyol reaction. Details of the two facility visits, pertinent findings and conclusions are presented in Section 3.0

*To convert pounds to kilograms multiply by 0.454

2.0 HAZARD EVALUATION

As discussed in the introduction to this report, the Allegheny Health Department requested technical assistance to evaluate potential emissions from both routine and non-routine conditions at the TDI user facilities studied under this work assignment. Storage, transfer, and chemical processing of TDI results in both fugitive and process emissions under routine conditions. These emissions are generally quantifiable, and are permitted; in addition, some sources are controlled. Non-routine occurrences are often labeled as sudden and accidental releases and are the result of a fire, explosion or spill. This chapter summarizes physical and chemical properties of TDI and describes a general classification of sudden and accidental releases and then briefly evaluates the potential for a toxic air pollutant (TAP) release for one of the TDI/polyol chemical processes being used in Allegheny County.

2.1 PHYSICAL AND CHEMICAL PROPERTIES OF TDI

TDI is a colorless-to-pale-yellow liquid of characteristic pungent odor. Most of the TDI marketed commercially is a mixture of 80 percent 2,4-toluene diisocyanate and 20 percent 2,6-toluene diisocyanate. At room temperature, this mixture is water-white to pale yellow mobile liquid. The physical properties of TDI are given in Table 2-1. The boiling point is 250°C, the flash point is 127°C, and the fire point is 142°C.

Figure 2-1 presents a vapor pressure temperature curve for TDI. At 25°C TDI has a low vapor pressure of 3×10^{-2} millibars, which corresponds to a concentration of the saturated vapor of about 30 ppm in the atmosphere.

TDI is an extremely reactive chemical which requires careful handling. In contact with water it reacts readily producing heat and forming carbon dioxide and insoluble ureas. The pressure created by the evolved heat and carbon dioxide is sufficient to rupture a closed container. Contact with compounds containing free hydrogen can produce even more violent reactions, as is discussed later in this report. TDI reacts with acids, bases, ammonia,

TABLE 2-1. PHYSICAL PROPERTIES OF TDI

Item	TDI Isomer Ratio 2,4- to 2,6-		
	100	80:20	65:35
Physical state at normal temps.		Liquid	
Viscosity (centipoise at 25°C)	(3-6)	3-6	(3-6)
Purity		>99.5%	
Color		Colorless to pale yellow	
Odor		Characteristic pungent	
Solubility in water		none, reacts	
Specific Gravity (g/ml) (at 25°C)	1.21	1.21	1.21
Boiling temperature (°C)	251	251	251
Flash temperature (°C)	(135)	135	(135)
Fire temperature (°C)	(142)	142	(142)
Autoignition temperature (°C)	(277)	277	(277)
Freezing temperature (°C)	22	<15	<8
Vapor density (air = 1)	6.0	6.0	6.0
Vapor pressure (mbar at 25°C)	.03	.03	.03
Explosion Limits (% v/v)			
Lower		0.9	
Upper		9.5	
Molecular Weight	174	174	174

Note: ( ) expected value for 80:20 material.

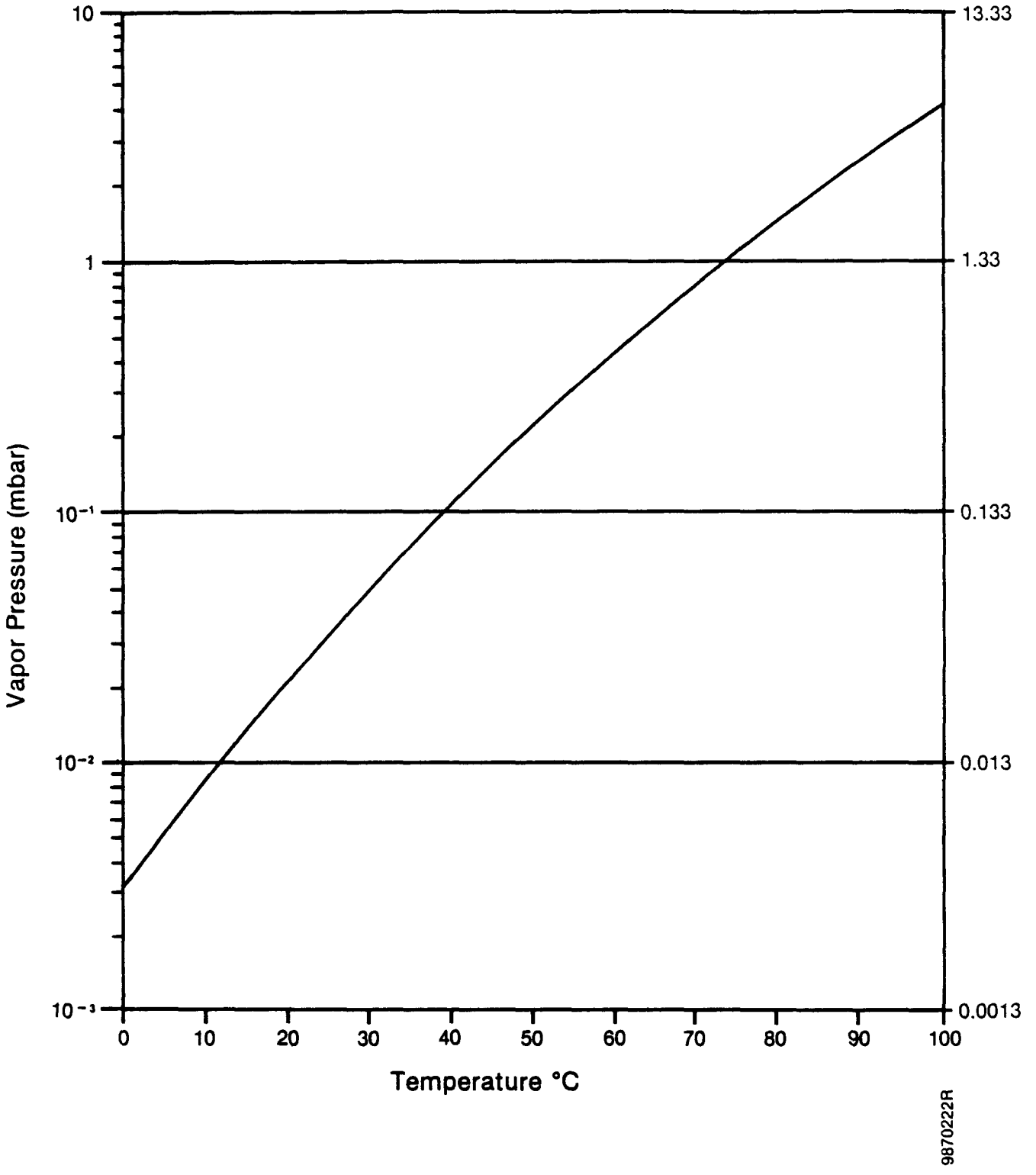

Figure 2 - 1. Diagram of Vapor Pressure for Toluene Diisocyanate

primary and seocndary amines and alcohols; surface active materials and organo-metallic catalysts such as mercury and tin compounds.

TDI is not generally corrosive towards metals or other materials at normal temperatures. However, isocyanates may attack and embrittle many plastics and rubber materials in a short time. Recommendations concerning the appropriate materials of construction or flexible hoses, etc., can be obtained from raw materials suppliers or equipment manufacturers.

The primary potential health effects associated with exposure to TDI and other isocyanates include respiratory effects (irritation/inflammation of the respiratory tract, pulmonary hypersensitivity, lung function decrements), dermal sensitization, and skin and eye irritation. Exposure to TDI at concentrations below current occupational exposure levels (OSHA--20 ppb and ACGIH--5 ppb) have caused elicitation of pulmonary hypersensitivity (e.g., asthma-like symptoms) in previously sensitized individuals.

In addition, TDI has been classified as a Group B2 carcinogen based on the EPA Guidelines for Carcinogen Risk Assessment (51 FR 33992). This classification indicates that there is sufficient evidence of carcinogenicity from animal studies and that TDI is a probable human carcinogen.

TDI has a sharp, pungent odor which can be detected by 50 percent of people at concentrations as low as 0.05 ppm. This odor and the strong irritating effect of the vapors on eyes and upper respiratory tract may be expected to alert workers to the presence of excessive concentrations of TDI vapors in air.

The immediately dangerous to life or health (IDLH level) set for TDI is given as 10 ppm. The IDLH represents a maximum concentration from which one could escape within 30 minutes without any escape-impairing symptoms or any irreversible health effects. This concentration can be readily attained in the vapor space of closed vessels containing TDI since it corresponds to the saturated upper pressure of TDI at 12°C (53.6^{o}F) and ambient temperatures are usually higher. Therefore, special precautions should be taken when entering a vessel that has been in TDI service to avoid exposure.

2.2 POTENTIAL FOR SUDDEN AND ACCIDENTAL RELEASES

2.2.1 General Considerations

There are several factors that must be considered when evaluating a facility's potential for a sudden and accidental release. These include the chemical and physical properties of the material stored and used; the quantity of these materials; the type of storage, process and waste handling operations; and the proximity of sensitive receptors and routes of exposure. The primary intent of this section is to discuss potential means of ranking hazardous materials used at a facility from the physical and chemical properties standpoint. Other factors will not be addressed.

Sudden and accidental disaster scenarios can be grouped into five broad categories:

- fires,
- explosions,
- release of a hazardous air pollutant (HAP),
- spill of hazardous chemical into surface water body, and
- contamination of potable aquifer.

The likelihood of any of these scenarios occurring at a given facility depends in part on the physical and chemical properties of the chemicals being handled at the facility. A significant determinant for a potential sudden and accidental occurrence affecting people or property off-site is the quantities of materials involved (i.e., in storage or in use). Other factors that must be considered in assessing the degree of hazard presented by a chemical or chemical process is the potential vector, or route of exposure: How would the people/property off-site be exposed to the pollutant of concern? Routes of exposure include inhalation, ingestion (water and food), and skin contact. In a sudden and accidental exposure, i.e., acute exposure--the issue of avoidance also has to be considered. Specifically, if the occurrence of a sudden and accidental incident is known, ingestion of pollutants appearing in a surface water body can be avoided by treating the water contaminated with a spill or by not consuming contaminated food. An alternate source of water or food can be found.

It is more difficult to avoid exposure to airborne pollutants since an alternate source of supply is not available, and the populace does not have gas masks on hand. For these reasons it is generally hypothesized that an accidental toxic gas release or an explosion/fire have greater potential to harm the general population than spills. In addition, the potential for off site impacts varies by chemical and physical properties such that gases are worse than liquids, which in turn are much worse than solids due to relative mobilities and ability to disperse, etc.

Therefore, the first step in hazard evaluation of any given facility should be to identify the chemicals used at the facility and the quantities in storage. The chemicals can then be evaluated to determine what type or types of hazard they present. One means of doing this is to prepare a list as shown in Table 2-2. The entries on the table indicate whether the material has a fire or explosion potential, is a TAP based on the TLV, or is a hazardous substance under 40 CFR Section 116.4. The designation of hazardous substance can be used as an indicator of the water pollution potential of the chemical. The reactivity column can be used to indicate which combinations of materials stored or used at the facility should be avoided. These data are used in the process evaluation, which is performed after the preliminary hazard identification process. Entries in the table are made using the plant inventory and commonly available references such as 40 CFR Section 116.4 and the material safety data sheets provided for each material by the supplier.

Based on the above review of the chemical and physical properties and quantities of materials stored at the example facility, the primary potential disaster scenario example for the facility can be identified.

2.2.2 TDI Users

The example Table 2-2 presents specific data for TDI, the chemical of concern in this evaluation. The data in the table suggest that the primary concern from a sudden and accidental standpoint would be as a hazardous air pollutant due to the very low TLV. However, TLV's alone do not completely encompass all chemical properties that contribute to a specific chemical being a TAP. However, the normal physical state for TDI is liquid and the vapor pressure of TDI is low at ambient conditions, as shown in Figure 2-1. Therefore, a ready vector does not exist. The table also shows that since the

TABLE 2-2. EXAMPLE METHOD FOR PRELIMINARY HAZARD EVALUATION AT A FACILITY

Material	Criteria			
	Fire or Explosion Potential	Potential TAP	Hazardous Substance	Reactivity
Toluene diisocyanate	Combustible decomposes and emits toxic fumes of cyanide and NO_x when heated	Yes TLV .005 ppm	Yes; RQ 100	Bases, amines, alcohols, water

RQ = Reportable Quantity (lbs) 40 CFR Section 116.4, and CERCLA list of hazardous substances.
Note: Fire potential, potential HAP and reactivity taken from material safety data sheets for each chemical.

decomposition products of TDI in a fire are highly toxic, exposure of TDI to fire should be avoided.

2.3 PROCESS EVALUATION

A second aspect of a facility-specific hazard evaluation involves determining how the chemicals of concern are used or produced at the facility. This section presents the results of a brief evaluation of the reaction of toluene diisocynate with sucrose polyether, considering the processing equipment in use at one of the Allegheny County TDI user facilities. However, the chemical processes in use at the two facilities visited during the survey were similar in that they were conducted in a batch mode with little instrumentation. The major difference between the processes at the two facilities was the reactant combined with TDI. The results from this evaluation should be applicable to both facilities.

Efforts have been made to obtain relevant information on the thermodynamics and kinetics of the TDI/polyol reactions used at both facilities; however, the TDI manufacturers contacted were unwilling to provide information. One source, a technical information bulletin entitled "Recommendations for the Handling of Toluene diisocyanate (TDI)," was obtained. This bulletin offered the following information on TDI reactivity:

> TDI is heavier than water and will sink to the bottom of water-filled containers. Although it reacts with water, the rate of reaction is slow at temperatures below 50°C because the reaction produces insoluble urea at the interface which limits mass transfer. At higher temperatures, or in well dispersed systems the reaction becomes progressively more vigorous. This reaction of TDI with water liberates carbon dioxide gas and a solid, insoluble mass of polyureas is formed. Pressure can build up in closed containers.
>
> TDI will also react with basic chemicals such as sodium hydroxide (caustic soda), ammonia, primary and secondary amines and with acids and alcohols. The reaction may be violent, generating heat which can result in an increased evolution of isocyanate vapor and in the presence of water the formation of

carbon dioxide, leading to increased pressure within closed containers.

The high reactivity of isocyanates is the basis for the poly-addition process for preparation of polyurethane plastics and foams.

This information, coupled with several references, including "Double Duty Scrubber for TDI Fumes," Plant/Operations Progress, October, 1983, Vol. 2, No. 4, pp. 243-146; and "Exotherm Data Acquisition in Polyurethane Foam Formation Using a Microcomputer," Analytical Instrumentation, 15(3), 201-213 (1986) indicate that in some instances TDI can react vigorously with polyols and a runaway reaction could occur.

Many process characteristics, such as those presented in Table 2-3, can affect hazard potential. These characteristics are arranged in a manner compatible with a model developed by Radian Corporation to estimate the probability of a release of hazardous air pollutants (HAP's) to the atmosphere. That model was designed to generate a numeric result that could be used to determine the relative probability/severity of a HAP release from different processes on a generic national level. One part of the model, the probability of a release value, can be evaluated meaningfully for a single process, and is somewhat applicable to the focus of this study. The results of the evaluation for production of a prepolymer resin by combination of TDI and sucrose polyether give a value of 4 for the probability of an air release. The evaluation placed urethane prepolymer production in last position out of 36 processes evaluated to date as shown in Table 2-4. This indicates that the reaction has a low potential to release a toxic air pollutant as a result of a sudden, accidental occurrence.

Considering all types of sudden or accidental occurrences, the chemical processes involving TDI use in Allegheny County are considered to be below average in terms of their potential contribution to the initiation/propagation of a sudden or accidental release of a toxic air pollutant compared with the range of processes in the chemical industry. The elements that tend to reduce this potential include the low hazard nature of the products, the low temperatures and pressures used in the process, the relatively low complexity

TABLE 2-3. EXAMPLE OF FACTORS AFFECTING PROCESS HAZARDS

Parameter	TDI and Sucrose Polyether	Hazard Contribution Rating Verbal	Numeric*
Mode of operation	Batch	Above average	7
Thermodynamics	Exothermic	Higher than average	7
Type of instrumentation	Operator hand control	Above average	9
Severity of process conditions	Low temperature, atmospheric	Below average	3
Complexity of the process	Below average	Below average	3
Type of reaction	Addition	Average	5**
Types of separations	None	Below average	0
Material volatility	Non volatile	Below average	3
Material atmospheric reactivity	TDI	Average	5
Volumes processed	Small	Below average	3
Overall probability of release factor from the model (on a 1 to 10 scale)			4

*Numeric rankings are assigned on a 1 to 10 basis, with a 1 representing an extremely low hazard contribution, 5 an average contribution and 10 an extremely high hazard contribution.

**The categories "Type of Reaction" and "Type of Separations" are each rated on a 1 to 5 scale and added to get a 1 to 10 rating for a combined field "Types of Processes."

TABLE 2-4. RANKING OF PROBABILITY OF RELEASE

Vinyl Chloride by Thermal Cracking of EDC	44
Ethylene by the Pyrolysis of NGL	42
Crude Terephthalic Acid-Air Oxid. of Xylene	38
Carbon Tetrachloride by Chlorinolysis	36
Glycerin by the Isomerization Route	35
Acetic Acid by Butane Oxidation	35
Kynar Monomer	27
Isotron 142b	26
Allyl Chloride from Propylene	25
Maleic Anhydride by Batch Oxid. Benzene	24
Maleic Anhydride-Cont. Oxid. Benzene	23
Ethylene Glycol-Hydration of Ethylene Oxide	23
Acetic Acid by Oxidation of Acetaldehyde	22
Allyl Alcohol from Acrolein	22
Acrolein by Oxidation of Propylene	22
Formaldehyde by the Silver Process	22
Chloroformates by Phosgenation of Alcohols	22
Methane Sulfonyl Chloride from Methyl Mercaptan	21
Diketene by Dimerization of Ketene	19
Acetic Anhydride-Pyrolysis of Acetic Acid	19
n-Propyl Mercaptan from Propylene and H_2S	19
Methyl Mercaptan from Methanol and H_2S	18
Formaldehyde by the Metal Oxide Process	17
Ethylene Oxide by Direct Oxidation	16
Diethylamine from Ethanol and Ammonia	16
Diethylaminoethanol from Diethylamine and Ethylene Oxide	15
Acetic Acid by Methanol Carbonylation	15
Epichlorohydrin from Allyl Chloride	14
Glycerin from Allyl Chloride	12
Glycerin from Epichlorohydrin	11
Purified Terephatalic Acid from Crude TPA	9
Kynar Polymer	8
Methanol from Natural Gas	6
Hydrogen Fluoride from Fluorspar	6
Fatty Acid Chlorination with PCl_3	4
*Urethane Prepolymer Resin from TDI and Sucrose Polyether	4

Note: Processes are listed in order of decreasing probability of release

*Subject process at Allegheny County

of the process, and the lack of any exotic types of separation equipment. Other factors which tend to increase the potential hazard of the process are the toxic nature of the raw material, the lack of instrumentation used, and the lack of specific information or the potential for a runaway reaction to occur.

Other aspects of each facility's production process, including operating details, the fire potential, and potential for spills will be discussed in the facility-specific sections in Chapter 3 of this report. However, many other facility-specific features can be included in a review of a facility to determine its potential for a sudden, accidental release and their impacts. These include the following:

- pressure control and relief system evaluation,
- fire protection/prevention evaluation,
- maintenance practices evaluation,
- environmental control devices and waste management facility evaluation,
- electrical system review,
- chemical compatibility in storage area evaluation,
- structural integrity review,
- evaluation of operator training,
- emergency/contingency plans evaluation,
- evaluation of coordination with local emergency services,
- plant layout evaluation,
- evaluation of the effects of plant location with respect to community impacts,
- evaluation of the environmental implications of a disaster, and
- evaluation of exposure associated with product or byproduct transportation.

A detailed evaluation of all of these aspects is beyond the scope of this work assignment; therefore, these items will not be covered during the facility evaluation. However, where applicable in the facility-specific discussions, reference will be made to some of these topics.

3.0 FACILITY VISITS

This section consists of reports of the trips made to the Pruett-Schaffer Chemical Company and to PPG Industries, Inc. Each trip report discusses the chemical process used, TDI storage and any recommendations based on the team's observations.

3.1 PLANT VISIT #1

I. Purpose

The purpose of the plant visit was to observe the urethane prepolymer production process and equipment and to gather information on the control techniques used at the Pruett-Schaffer facility.

II. Place and Date

Pruett-Schaffer Chemical Company
Tabor Street
Pittsburgh, PA 15204
March 10, 1987

III. Attendees

Elliott R. Coyle Jr., Pruett-Schaffer Chemical Company
Joseph L. Ruffing, Jr., P.E., Allegheny County Health Department
Richard Baker, Allegheny County Health Department
Robert E. Rosensteel, EPA/OAQPS
Andrew J. Miles, Radian Corporation
T. Kelly Janes, EPA/AEERL

IV. Discussion

This section describes briefly Pruett-Schaffer's prepolymer process used at Pruett-Schaffer and then discusses emission sources, work practices and

air pollution control used at the facility. Raw material storage is also discussed.

The Pruett-Schaffer Chemical Company manufactures industrial protective coatings, both water-based and solvent-based, using sheer mixing through milling techniques. The facility also manufactures a polyurethane pre-polymer resin in batched lots and warehouses and ships small amounts of industrial chemicals. The manufacture of the pre-polymer resin is the subject of this trip report.

The facility is located on a small plot of land in a mixed residential and commercial neighborhood in Pittsburgh. The portion of the facility which is the subject of this report occupies a concrete block building on the northern property edge adjacent to a right-of-way. A residential neighborhood borders the facility on the east and south, and there is a warehouse north of the building across the right-of-way (see Figure 3-1).

Process Description

Pruett-Schaffer uses approximately 460,000 lb/yr of toluene diisocyanate (TDI) in the manufacture of polyurethane pre-polymer resin. This resin in turn is used as one portion of a two-part urethane system for rigid foams in boat building. A schematic drawing of the batch process is given in Figure 3-2. The facility operates the process four days a week and produces some 96 batches a year. Each batch takes approximately 14 hours to produce. The process is operated only during the day shift, when all chemical additions, raw material addition, and product withdrawal are completed.

In a typical batch the reactor is charged with some 7,675 pounds of feed, consisting of 80 percent of TDI and 20 percent sucrose polyether. For a typical batch the reaction sequence is as follows: 11 drums of TDI are charged to the reactor using a positive displacement pump; when charging is complete the pump and associated charge lines are flushed with mineral spirits. At present the mineral spirits are recirculated. According to plant personnel, little if any waste mineral spirits have been generated. Following charging with TDI, three drums of the sucrose polyether are added one after

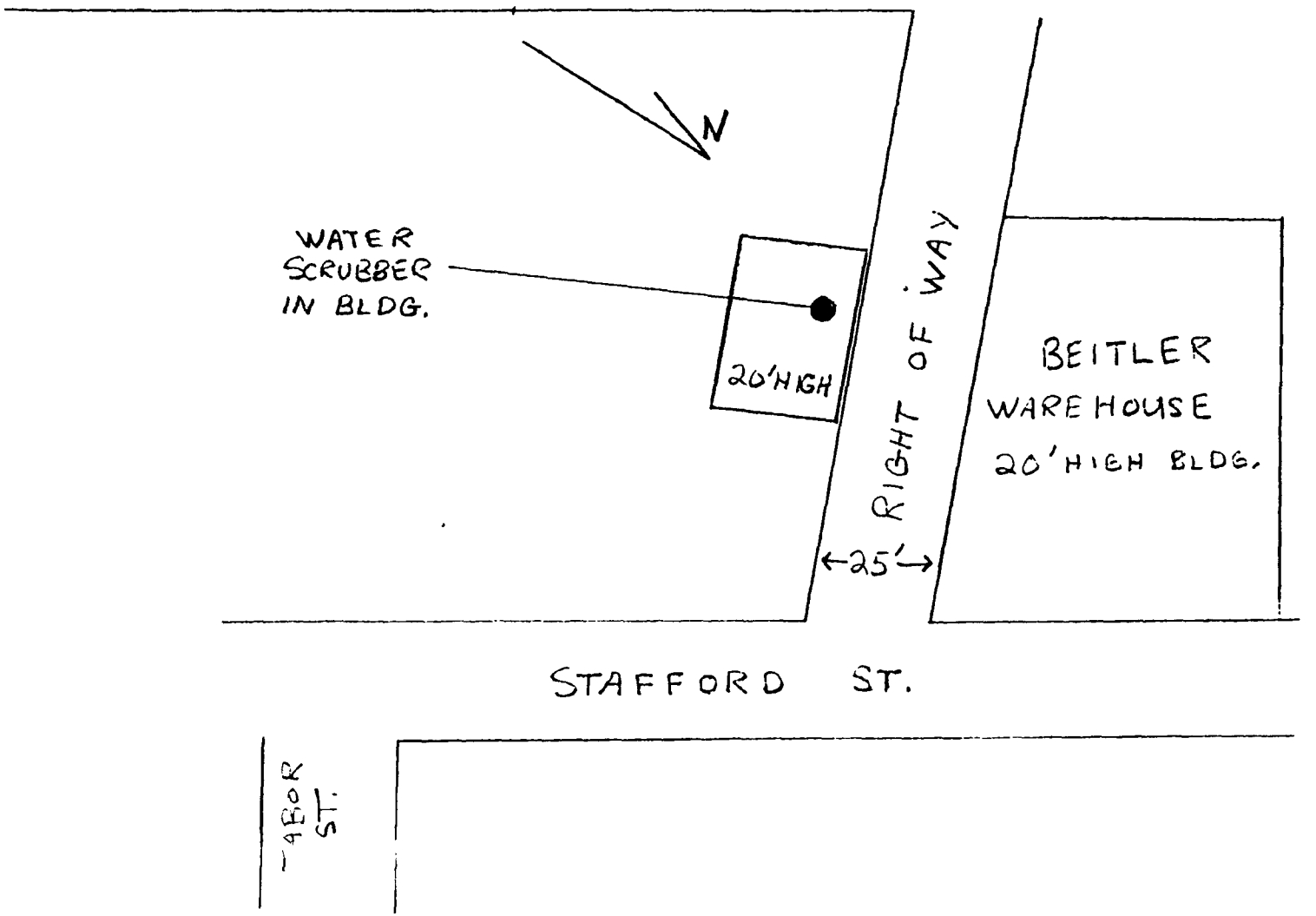

Figure 3-1. Diagram of Pruett-Schaffer Facilities.

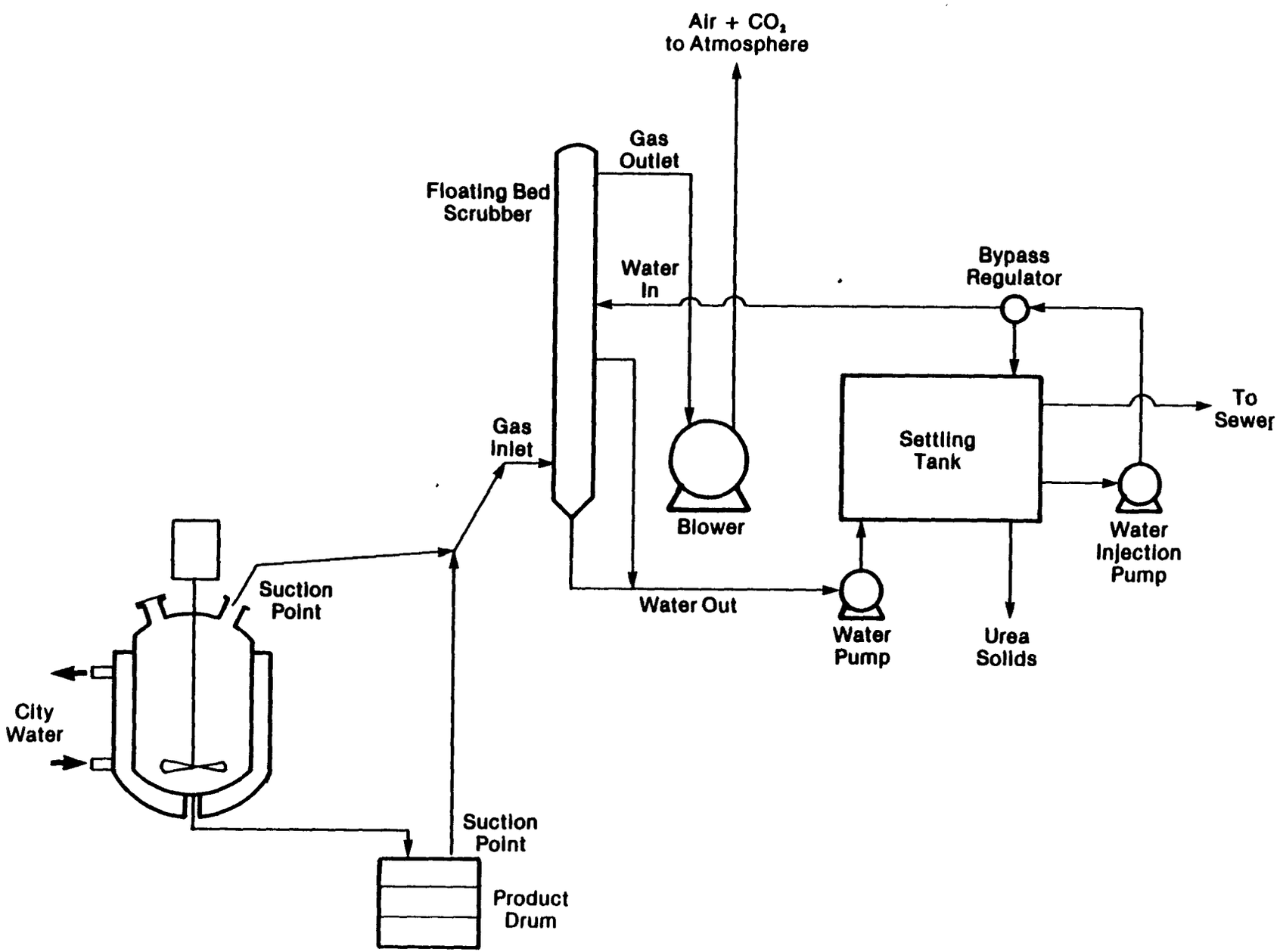

Figure 3-2. Schematic Drawing of the Pruett-Shaffer TDI Process

the other. The sucrose polyether is withdrawn from a bulk storage tank located in the same room as the reactor and placed in 55-gallon drums. Each drum is weighed prior to addition. The filled drums of sucrose polyether are heated on a gas-fired burner located in an adjacent room to lower the viscosity and to help the material to flow. The drums containing the hot material (no temperature specified or measured) is then placed on a pallet and lifted by forklift truck to the top of the reactor. The sucrose polyether is then slowly added to the stirred reactor through a 12- to 14-inch manway over a period of several hours. During addition cooling water is circulated through the reactor jacket and the contents is agitated. The temperature of the reactor contents is monitored, using a single thermocouple attached to a circular chart recorder. According to plant personnel, the reaction of the TDI with a sucrose polyether (SPE) is mildly exothermic and the temperature of the reactor rises to 125°F (51.6^{o}C) within one to two hours. This temperature can go as high as 150°F (65.6^{o}C). The temperature is controlled by the rate of SPE addition and the flow of cooling water. Addition of the first and second drum of SPE takes about four to five hours. The reactor is allowed to cool to 115-120°F (46-48.9^{o}C) before the second drum is added. The third drum of SPE is weighed, heated, and added to the reactor on subsequent day shifts. The rate of addition is decreased for the second and third drum of SPE The viscosity of the finished product and its free TDI content is checked to see if they meet product specifications. Then the batch is placed in empty TDI drums for subsequent shipment.

The temperature of the finished product can be as high as 110-120°F (43.3-46°C) during drumming. However, neither the temperature nor flow rate of the cooling water through the jacket is monitored. The operator determines if the cooling water is flowing by observing valve positions, and by listening for flow in the drainage pipes and by observing the drum outlet. There is no level indicator on the reactor vessel; however, none is needed since the quantity of materials charged for every batch is fixed and, according to Pruett-Schaffer personnel, overfilling has never occurred. Some spillage of finished product was noted around the manway on the reactor indicating that the vessel is close to 100 percent full at the end of the batch. Typical

practice in the batch chemical processing industry is to operate batch reactors at 67-80 percent liquid capacity to avoid spillage.

According to plant personnel, loss of agitation or loss of cooling water does not cause a runaway reaction. However, a crust may form on top of the reactor. Addition of excess SPE is unlikely since the material is extremely viscous and flows very slowly. Further, the manway on the reactor is too small for the drum to fall in.

Air Emissions Control

There are several potential emission sources for the urethane pre-polymer manufacturing process. These include the reactor, drum unloading, and drum loading operations. Fugitive emissions from these sources are controlled by two pickup points with a total airflow of 2,100 scfm ducted to a national dust collector hydro-filter scrubber. This is a moving or floating bed scrubber consisting of three plates or trays covered with glass or ceramic spheres. These are kept in motion by the gas velocity moving through the bed and by the jetting action of the nozzles located under each tray. A schematic drawing of the scrubber is given in Figure 3-3. The scrubbing medium used is city water. The water can be used on a once-through or a circulating basis. The design water recirculation rate is 60 gallons per minute. There have been no performance tests of the scrubber since it became operational and no analyses of the scrubber effluent have been made. TDI reacts with water to form amides and, subsequently, ureas. However, no data are available on reaction rates. Calculations performed by Allegheny County Health Department representatives based on best available information indicate 99.9 percent removal of TDI.

Emissions from the reactor are largely the result of gas liberated by the reaction of the sucrose polyether with TDI as well as gas displaced during the reactor filling operations. Emissions are therefore a function of the rate of material addition and the temperature of the batch. Under the concurrent control system the displaced vapors exit the reactor through a 12- to 14-inch diameter manway on the reactor and are picked up by a suction point located within six inches of the opening. Similarly, emissions resulting during drum

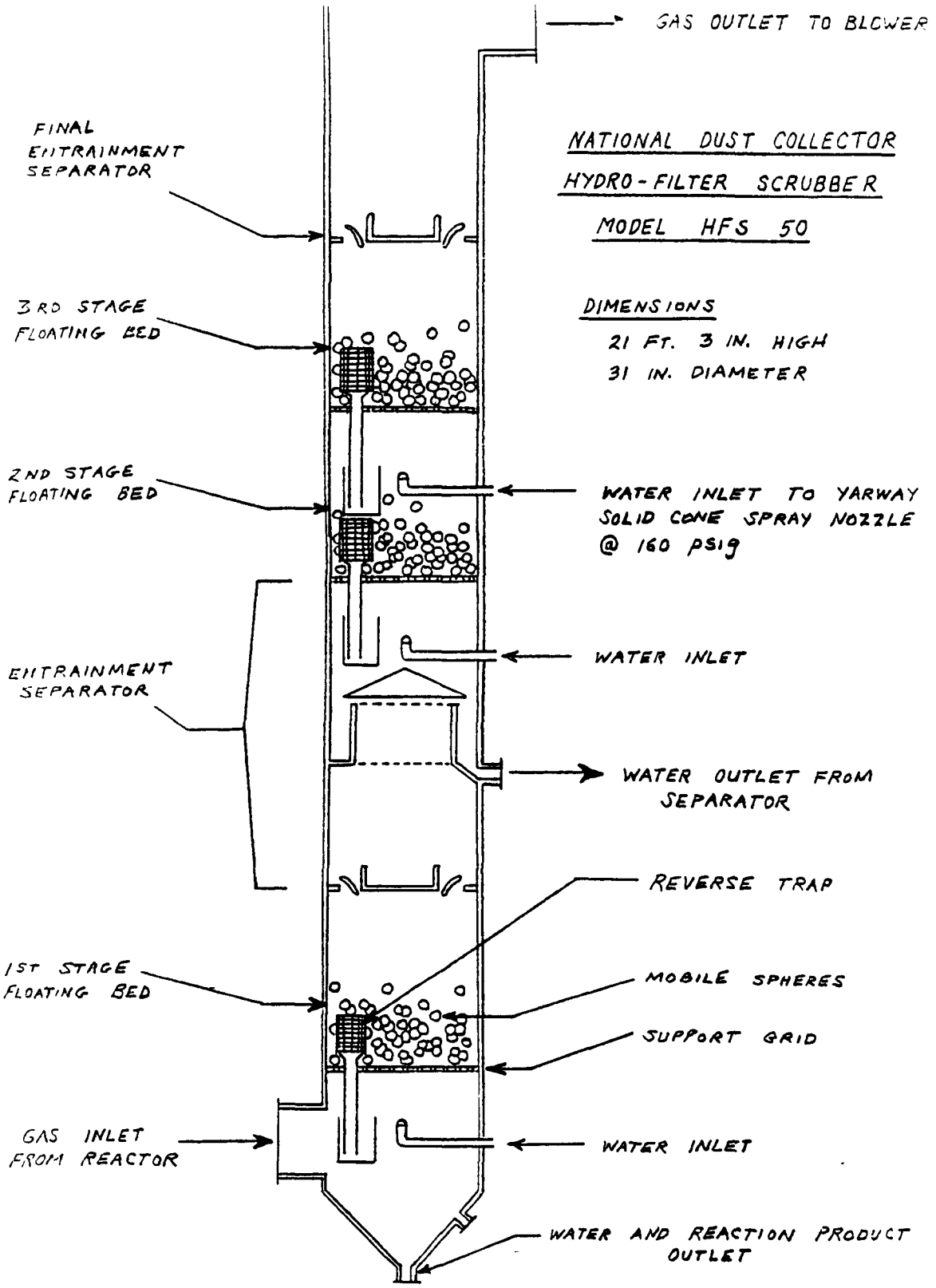

Figure 3-3. Schematic Drawing of the Scrubber.

filling are controlled by a pickup point consisting of an eight-inch flexible hose placed adjacent to the drum openings during the gravity filling operation.

Raw Material Storage

Drum quantities of TDI are stored at one of three locations at the facility. There are two storage locations inside the building: one in the room away from the reactor and the second inside a wooden steam-heated enclosure in the room containing the reactor and sucrose polyether storage tank (see Figure 3-4). Several other raw materials are stored in the same location, including gasoline (stored outside subsequent to the visit) and titanium dioxide and aluminum powder in mineral spirits.

Several old reaction kettles are located in the building. Up to 90 drums of TDI can be stored in the building. If additional quantities of TDI are purchased these are stored on a concrete slab outside the building, adjacent to a slotted yard drain. There is a single floor drain located inside the building. This is kept plugged when the prepolymer product is being produced.

Operator Training

There is no formalized operator training at the Pruett-Schaffer facility. In general, one man is responsible for all aspects of the prepolymer operation, from weighing the raw materials, loading the vessel, and making the product, to filling shipping containers. There are no written operating instructions and all aspects of the operation were learned by rote. If the single operator is not available, one of the managers runs the operation when there is a demand for the product.

Emergency and Contingency Plans

In the past, the facility has prepared a contingency plan dealing with fires; however, the plan does not cover spills or toxic gas releases for the TDI/prepolymer operation. According to plant personnel, the local fire department was scheduled to visit the facility a few days after the team's visit to help revise the plan.

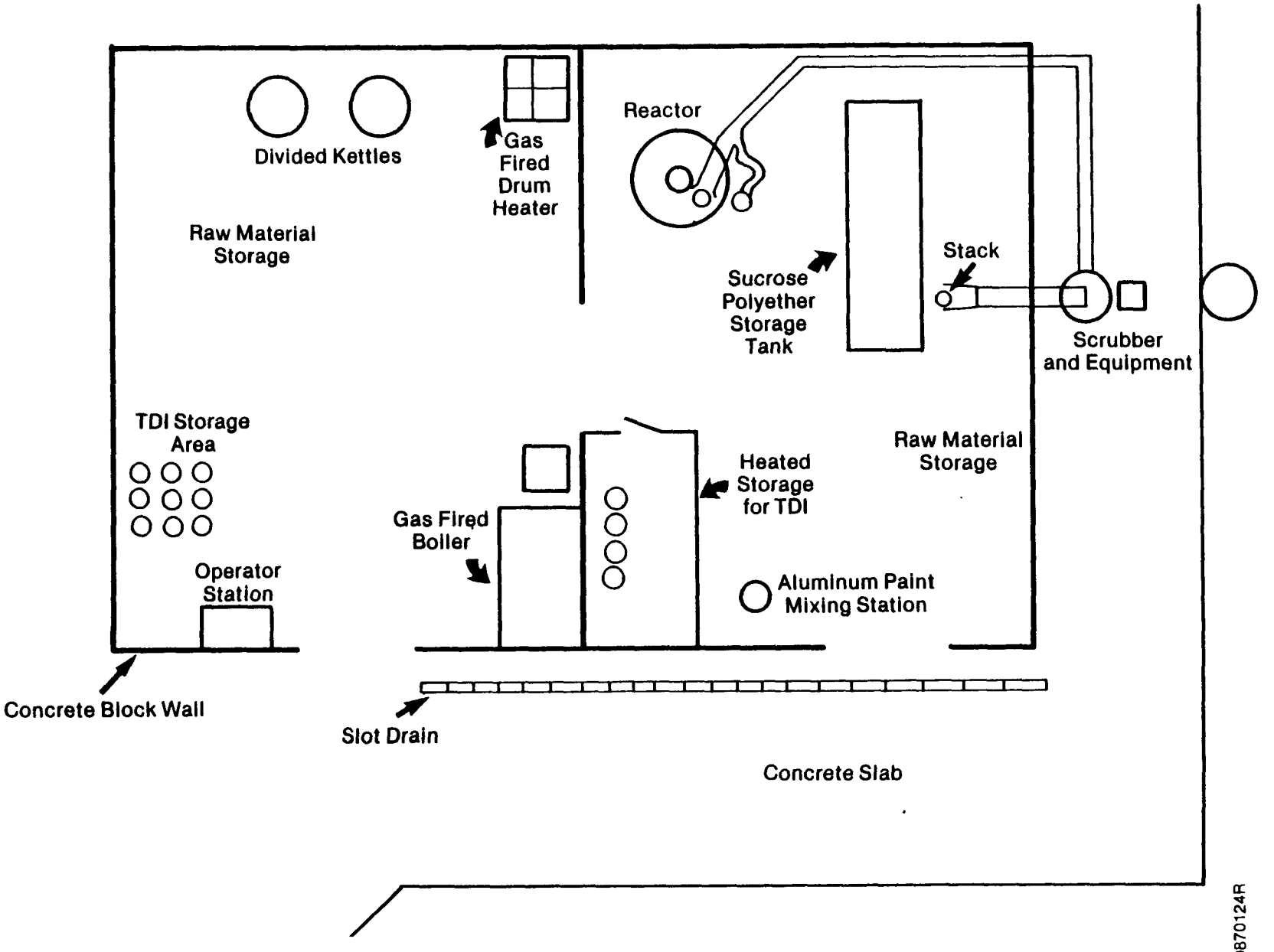

Figure 3-4. Diagram of Raw Material Storage Areas

9870124R

Recommendations

Several recommendations were generated as a result of the plant visit. These are presented and discussed below.

1. Improve fire protection and contingency plan. To lower the potential for a fire in the TDI/pre-polymer building, the amounts of combustible materials stored in the building should be reduced. Improved housekeeping is mandatory. During the visit, considerable quantities of cardboard boxes were noted at several locations in the building. These were stored adjacent to the wooden TDI drum warming structure. In addition, several half-full pails of pre-polymer or resin were left adjacent to the reactor. A half-full drum of gasoline was stored in the building adjacent to a direct-fired space heater and several small drums of aluminum powder in mineral spirits were located adjacent to the aluminum paint mix tank.

Because of the potential for release of large quantities of toxic decomposition products as well as TDI vapors, resulting from a TDI fire it is recommended that:

a. TDI be segregated from other combustible and flammable materials and sources of ignition to the maximum extent possible.
b. All extraneous packing materials, and used pails of prepolymer should be removed from the building and disposed of properly.
c. Consideration should be given to replacing the wooden enclosure used for warming TDI with one constructed of non-flammable materials.
d. Fire extinguishers should be properly mounted and located following fire department and insurance company recommendations.
e. The fire department should be informed of the presence of considerable inventories of TDI in the building and should ascertain the best methods of fighting a fire or controlling a spill involving the material.
f. Facility management should prepare a housekeeping inspection checklist for the area to ensure that the area is kept clean and free of extraneous flammable and combustible materials.
g. An emergency and contingency plan should be written which considers how the impacts from a fire or a spill would be mitigated.

h. The nearest downwind sensitive receptors should be identified (i.e., a community center, hospital, schools) and means of alerting them determined.

i. The nearest hospital emergency room should also be contacted and given appropriate material safety data sheets and first aid information.

2. Provide additional process monitoring and control. The reaction between TDI and sucrose polyether is exothermic. However, information on the degree of exothermicity and the potential for a runaway reaction was not available from Pruett-Schaffer personnel or producers of TDI. Pruett-Schaffer personnel felt that the reaction could be monitored using temperature indicators and controlled by the rate of addition of sucrose polyether, and that cooling water failure or agitator failure would not lead to a runaway reaction and subsequent release of TDI and SPE.

It is recommended that:

a. The temperature indicator and recorder be moved from the wall adjacent to the reactor to a more distant location so the operator need not be in the immediate vicinity of the reactor when monitoring the operation. Alternatively, dual location of the temperature indicator and recorder could be provided at the remote position.

b. Some means of positively identifying water flow to the reactor jacket should be provided. This could include a simple flow indicator or hourly visual checks of the discharge and recording these observations on a log sheet.

c. Some means of monitoring water flow in the scrubber circuit should also be provided.

d. For new employee training, the company needs to develop a written procedure that will prevent the inadvertent heating of a drum containing TDI rather than the sucrose polyether.

The emissions capture system on the reactor and the drumming operation could also be improved. It is recommended that:

a. The existing ductwork be modified to include taking suction from the reactor through one or both of the existing two-inch nipples. The size of the nipple may have to be increased to avoid potential plugging problems, lower the pressure drop and allow sufficient air

to be pulled through the reactor opening to maintain a face velocity of 100 to 200 feet per minute. This would change the direction of air flow and prevent fugitive emissions of TDI leaving the reactor through the manway (see Figure 3-3).

b. Some means of temporarily reducing the amount of open area at the manway (e.g., a loose-fitting lid with a funnel connection) would lower the volume of air required for effective capture of fugitive emissions.

c. The existing flexible hose system for capture of emissions during drumming and pumping should also be modified to improve capture. Some suggested hood designs are shown in Figure 3-5. These designs are taken from the industrial ventilation manual and have been proven in practice.

3. Improve spill procedures. Several improvements to the spill procedures are recommended:

a. Written procedures for control of TDI spills should be included in the emergency and contingency plan for the facility.

b. A spill cleanup solution should be prepared and kept in the TDI/pre-polymer building to neutralize spills (the recommended solution is a mixture of water, surfactant, and alcohol or ammonia).* A bucket containing this solution should be placed under the discharge pipe on the reactor to contain and neutralize small drips and spills.

c. The batch size should be reduced so that the reactor is no more than 80 percent liquid full at the end of the run. This would eliminate the overfilling which has apparently occurred sometimes in the past.

One other recommendation which does not affect the fire potential but is a general safety item is that all the air supply bottles should be securely fastened and chained to the wall and not left standing freely. Also, a respirator program should be prepared since the operator uses an air supplied respirator.

---

*Technical Information, Recommendations for the Handling of Toluene Diisocyanate (TDI), November 1980, compiled by International Isocyanate Institute.

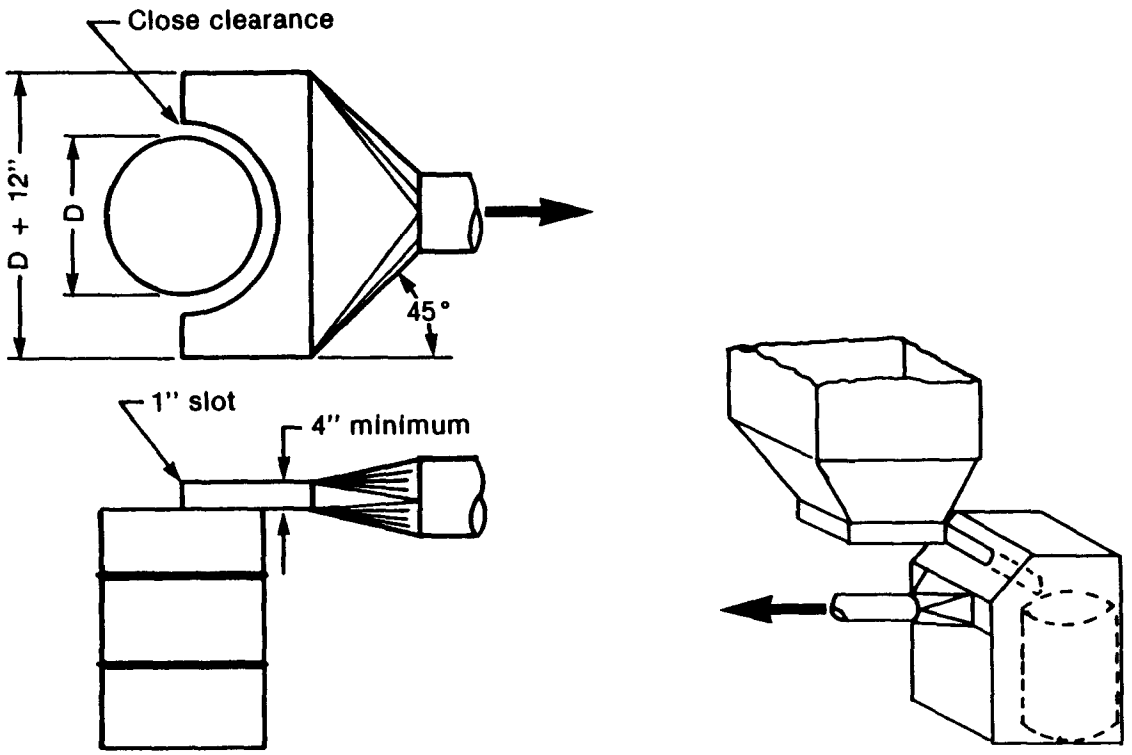

Figure 3-5. Suggested Hood Design
Taken from American Conference of Governmental Hygienists Ventilation Manual

9870535R

3.2 PLANT VISIT #2

I. Purpose

The purpose of the plant visit was to observe the urethane alkyds production process and equipment and to gather information on the control techniques used at the PPG facility.

II. Place and Date

PPG Industries, Inc.
125 Colfax Street
Springdale, PA 15144
March 11, 1987

III. Attendees

Joseph L. Ruffin Jr., P.E., Allegheny County Health Department
Richard Baker, Allegheny County Health Department
David Jucha, PPG Industries, Inc.
C. F. Wallace, PPG Industries, Inc.
Other PPG personnel
Robert E. Rosensteel, EPA/OAQPS
Andrew J. Miles, Radian Corporation
T. Kelly Janes, EPA/AEERL

IV. Discussion

This section briefly describes the urethane alkyds production process at PPG Industries, Inc., and also discusses the air pollution control equipment used at the facility to control TDI emissions and methods of TDI storage.

The PPG facility at 125 Colfax Street manufactures a variety of paint and resin products. Paint manufacturing consists of combining resins, solvents, pigments, and additives through the milling and grinding equipment. Resin manufacturing consists of combining reagents in heated reactors and reaction vessels and/or mixing and blending of raw materials and resins to form a usable product. The manufacture of two urethane alkyds using TDI is the subject of this report.

V. Process Description

PPG currently uses approximately 71,000 lb/yr of toluene diisocyanate (TDI) in the manufacture of two urethane alkyd products. These products are used in paint formulation elsewhere in the facility or at other PPG locations. A schematic drawing of the batch process used at PPG for both urethane alkyds is shown in Figure 3-6. The facility currently operates the process five days a week and produces 30 to 40 batches per year. Each batch takes approximately four hours to produce.

Currently, two different alkyds are produced: one uses 3,500 gallons of resin and 220 gallons of TDI, and the second uses 2,000 gallons of resin and 100 gallons of TDI.

In a typical batch, the resin is charged to the reactor and heated to 180°F (82°C). The requisite amount of TDI is then charged through a pump and meter into the agitated resin in the vessel. The mix typically undergoes a 5 to 10°F (2.8-5.6^{o}C) rise in temperature due to the exotherm. After the temperature has peaked in the reactor, heat is then applied to complete the reaction. Completed resin is then pumped to another processing area. The reaction vessel has a nominal volume of approximately 4,500 gallons. According to plant personnel, there is sufficient volume left for any expansion resulting from the reaction. Loss of cooling or agitation in the reaction vessel is no particular problem, since the exotherm is only 5 to 10°F (2.8-5.6^{o}C). Addition of excess TDI is avoided by the use of the meters in the transfer lines. These meters are read before and after TDI is added.

Air Emissions Control

There are several potential emission sources for the urethane alkyd process. These include tank truck unloading, transfer from the bulk storage tank, and emissions during the reaction. All of these emission sources are controlled using a two-stage water ejector system. Water used in the ejectors is constantly recirculated. No data were available on either the air flow rates or the water flow rates in the ejectors. However, data in the literature suggest that this type of scrubber can be very effective in controlling TDI emissions.

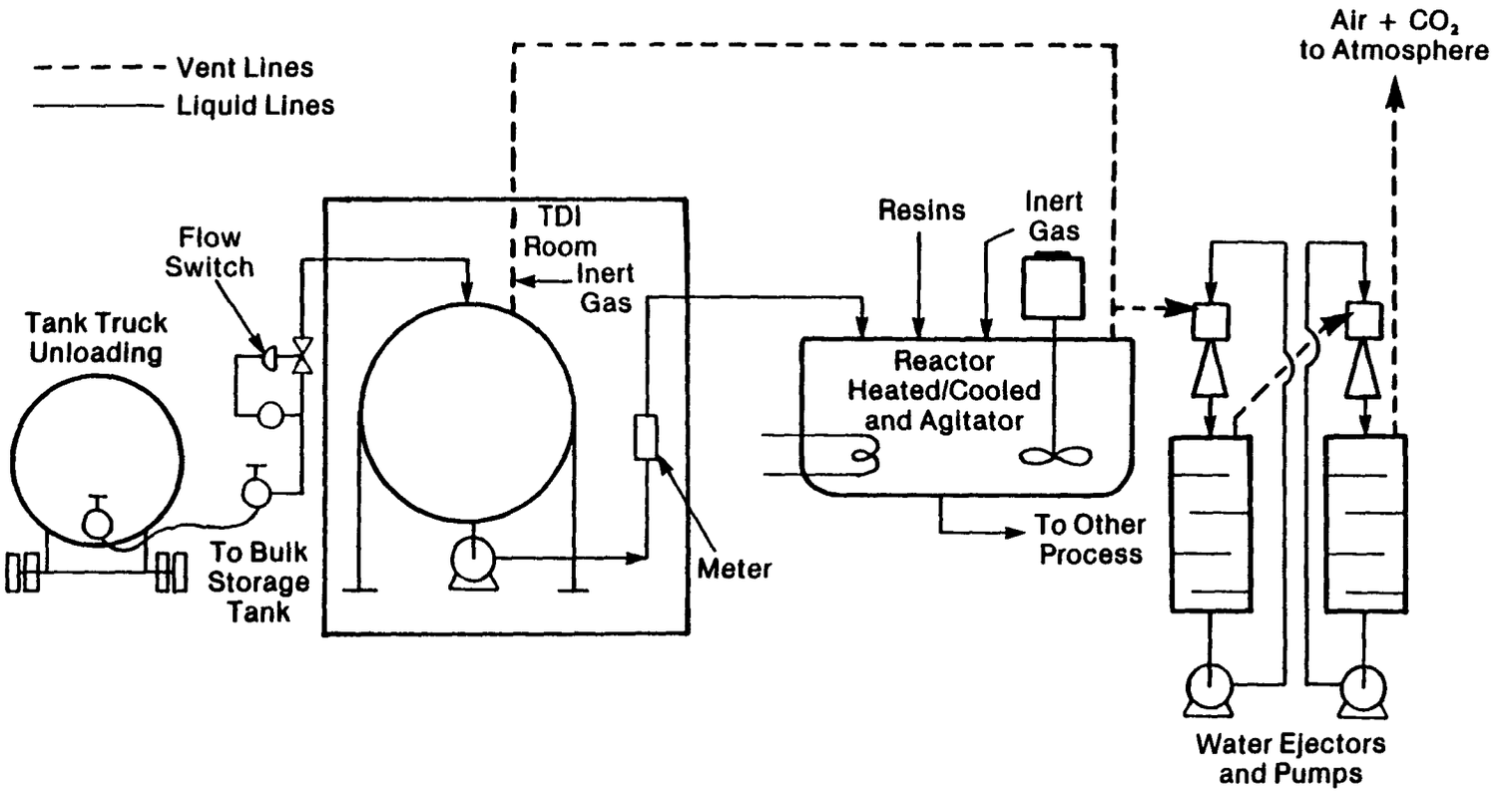

8870176R

Figure 3-6. Schematic Drawing of Urethane Alkyds Process at PPG

Emissions from the reactor and the storage vessels are largely the result of gas displaced during the storage tank and reactor filling operations. No gas is liberated by the reaction of the resin with TDI. Emissions, therefore, are a function of the rate of material addition and the temperature of the batch. Emissions from the reactor at 80-90^{0}C could be as high as 2,000 parts per million if equilibrium of TDI were achieved. However, the actual vapor pressure exerted by the TDI will be lowered in proportion to its mole fraction in the reactor. Even at 5 mole percent the vapor pressure of TDI would be higher than the IDLH of 10 ppm. It may be advisable to consider using an alternate scrubbing medium in the recirculating system such as aqueous ethyl alcohol with 1 to 2 percent potassium hydroxide to improve the scrubbing efficiency. The two-stage scrubber may in fact work well. However, there have been no emission tests of the system, although an ambient sample was taken during tank truck unloading around one of the vents on the scrubbers approximately three feet downwind, and no TDI was detected.

Raw Materials Storage and Unloading

The PPG facility has one bulk storage tank for TDI with a 2,000 gallon capacity isolated in a room on the first floor of the facility. There are four openings or piped conduits in the floor of the tank room. Any spills occurring in the tank would not be contained in the area.

TDI is received by tank truck in 1,200 to 1,500 gallon shipments. The tank truck unloading area consists of a concrete pad. During tank truck unloading the yard drain in the vicinity is plugged. In addition, quantities of a neutralizing solution consisting of water, ammonium hydroxide, and detergent are kept at the door adjacent the unloading area in the event of a spill. The unloading line is also equipped with low flow air-actuated valves which close if a line rupture occurs. Some area sampling has been conducted during the tank truck unloading. Very low levels, less than 5 ppb, in the immediate vicinity during unloading of TDI have been noted. A maximum of 13 ppb was detected at a hose connection during initial hookup for unloading.

Other Items

The facility has written procedures to be followed for tank truck unloading and production of the polymer. In addition, the facility has prepared detailed emergency and contingency plans for the operation. All PPG facilities participate in local community awareness (CAER) programs and they are now actively involving the Springdale Fire Department.

Recommendations

Very few recommendations were generated as a result of the plant visit. These are presented below.

1. Provide spill protection in the bulk tank room, and monitor for TDI in the basement under the tank in the event of a spill. If a spill were to occur from the bulk storage tank or associated pumps and piping, it would not be contained. Some means of plugging the four pipe conduits should be provided along with curbing inside the doorway to help contain the spill.
2. Conduct a performance test on the scrubber or devise a method of monitoring the scrubber performance. If scrubber performance is unsatisfactory, consider changing the scrubber medium to aqueous ammonia and potassium hydroxide.

TECHNICAL REPORT DATA
(Please read Instructions on the reverse before completing)

1. REPORT NO. EPA-450/3-87-022	2.	3. RECIPIENT'S ACCESSION NO.
4. TITLE AND SUBTITLE Evaluation of Potential Emissions of TDI from Two Facilities		5. REPORT DATE October 1987
		6. PERFORMING ORGANIZATION CODE
7. AUTHOR(S)		8. PERFORMING ORGANIZATION REPORT NO.
9. PERFORMING ORGANIZATION NAME AND ADDRESS Office of Air Quality Planning and Standards Environmental Protection Agency Research Triangle Park,North Carolina 27711		10. PROGRAM ELEMENT NO.
		11. CONTRACT/GRANT NO.
12. SPONSORING AGENCY NAME AND ADDRESS DAA of Air Quality Planning and Standards Office of Air and Radiation U.S. Environmental Protection Agency Research Triangle Park, North Carolina 27711		13. TYPE OF REPORT AND PERIOD COVERED Final
		14. SPONSORING AGENCY CODE EPA/200/04

15. SUPPLEMENTARY NOTES

16. ABSTRACT

Two facilities which use TDI were inspected by EPA at the request of a county air pollution control agency. The inspections were performed to identify potential sources of routine and accidental releases of TDI. This report presents the results of the inspections.

17. KEY WORDS AND DOCUMENT ANALYSIS

a. DESCRIPTORS	b. IDENTIFIERS/OPEN ENDED TERMS	c. COSATI Field/Group
Air Pollution Pollution Control Volatile Organic Compounds Air Toxics Toluene Diisocyanate TDI	Air Pollution Control Stationary Sources Accidental Releases	13B

18. DISTRIBUTION STATEMENT Unlimited	19. SECURITY CLASS *(This Report)* Unclassified	21. NO. OF PAGES 38
	20. SECURITY CLASS *(This page)* Unclassified	22. PRICE

EPA Form 2220-1 (Rev. 4-77) PREVIOUS EDITION IS OBSOLETE