United States
Environmental Protection
Agency

Office of Air Quality
Planning and Standards
Research Triangle Park NC 27711

EPA-450/4-84-007c
March 1984

Air

EPA

Locating And Estimating Air Emissions From Sources Of Chloroform

EPA-450/4-84-007c
March 1984

Locating And Estimating Air Emissions From Sources Of Chloroform

U.S. ENVIRONMENTAL PROTECTION AGENCY
Office Of Air And Radiation
Office Of Air Quality Planning And Standards
Research Triangle Park, North Carolina 27711

This report has been reviewed by the Office Of Air Quality Planning And Standards, U.S. Environmental Agency, and has been approved for publication as received from GCA Technology. Approval does not signify that the contents necessarily reflect the views and policies of the Agency, neither does mention of trade names or commercial products constitute endorsement or recommendation for use.

CONTENTS

Figures iv
Tables v

1. Purpose of Document 1
2. Overview of Document Contents 3
3. Background. 5
   Nature of Pollutant. 5
   Overview of Production and Uses. 8
4. Chloroform Emission Sources 11
   Chloroform Production. 11
   Fluorocarbon Production. 20
   Pharmaceutical Manufacturing 26
   Ethylene Dichloride Production 29
   Perchloroethylene and Trichloroethylene Production 38
   Chlorination of Organic Precursors in Water. 44
   Miscellaneous Chloroform Emission Sources. 61
5. Source Test Procedures. 63

References 66
Appendix - Derivation of Emission Factors for Chloroform Production A-1
References for Appendix. A-23

FIGURES

Number		Page
1	Chemical use tree for chloroform	10
2	Basic operations that may be used in the methanol hydrochlorination/methyl chloride chlorination process .	12
3	Basic operations that may be used in the methane chlorination process	15
4	Basic operations that may be used in fluorocarbon 22 production	21
5	Basic operations that may be used in the synthetic pharmaceutical manufacturing process	27
6	Basic operations that may be used in the production of ethylene dichloride by the balanced process, with air-based oxychlorination.	30
7	Basic operations that may be used in the production of ethylene dichloride by the balanced process, oxygen-based oxchlorination step.	32
8	Basic operations that may be used in perchloroethylene and trichloroethylene production by chlorination of ethylene dichloride.	39
9	Basic operations that may be used in perchloroethylene and trichloroethylene production by oxychlorination of ethylene dichloride.	41
10	Basic operations that may be used in the pulp and paper manufacturing process.	45
11	Method 23 sampling train	64
A-1	Process flow diagram for hypothetical plant using methanol hydrochlorination/methyl chloride chlorination process.	A-17
A-2	Process flow diagram for hypothetical plant using methane chlorination process	A-20

TABLES

Number		Page
1	Physical Properties of Chloroform.	6
2	Controlled and Uncontrolled Chloroform Emission Factors for a Hypothetical Chloroform Production Facility (Methanol Hydrochlorination/Methyl Chloride Chlorination Process). .	17
3	Controlled and Uncontrolled Chloroform Emission Factors for a Hypothetical Chloroform Production Facility (Methane Chlorination Process)	18
4	Chloroform Production Facilities	19
5	Controlled and Uncontrolled Chloroform Emission Factors for a Hypothetical Fluorocarbon 22 Production Facility	23
6	Fluorocarbon Production Facilities	25
7	Controlled and Uncontrolled Chloroform Emission Factors for a Hypothetical Facility Producing Ethylene Dichloride by the Balanced Process	34
8	Ethylene Dichloride Production Facilities.	37
9	Facilities Producing Perchloroethylene and/or Trichloroethylene.	43
10	Uncontrolled Chloroform Emission Factors for Hypothetical Pulp and Paper Mills	48
11	Pulp and Paper Mills	49
A-1	Summary of Calculations of Chloroform Storage Emission Factors.	A-5
A-2	Storage Tank Parameters for Methanol Hydrochlorination/ Methyl Chloride Chlorination Process	A-6
A-3	Summary of Composition Calculations for Methanol Hydrochlorination/Methyl Chloride Chlorination-Crude Product Tank	A-7
A-4	Summary of Composition Calculations for Methanol Hydrochlorination/Methyl Chloride Chlorination-Surge Tank	A-9

TABLES (continued)

Number		Page
A-5	Storage Tank Parameters for Methane Chlorination Process.	A-11
A-6	Summary of Composition Calculations for Methane Chlorination - Crude Product Tank.	A-12

SECTION 1
PURPOSE OF DOCUMENT

EPA, States and local air pollution control agencies are becoming increasingly aware of the presence of substances in the ambient air that may be toxic at certain concentrations. This awareness, in turn, has led to attempts to identify source/receptor relationships for these substances and to develop control programs to regulate emissions. Unfortunately, very little information is available on the ambient air concentrations of these substances or on the sources that may be discharging them to the atmosphere.

To assist groups interested in inventorying air emissions of various potentially toxic substances, EPA is preparing a series of documents such as this that compiles available information on sources and emissions of these substances. This document specifically deals with chloroform. Its intended audience includes Federal, State and local air pollution personnel and others who are interested in locating potential emitters of chloroform and making gross estimates of air emissions therefrom.

Because of the limited amounts of data available on chloroform emissions, and since the configuration of many sources will not be the same as those described herein, this document is best used as a primer to inform air pollution personnel about 1) the types of sources that may emit chloroform, 2) process variations and release points that may be expected within these sources, and 3) available emissions information indicating the potential for chloroform to be released into the air from each operation.

The reader is strongly cautioned against using the emissions information contained in this document to try to develop an exact assessment of emissions from any particular facility. Since insufficient data are available to develop statistical estimates of the accuracy of these emission

factors, no estimate can be made of the error that could result when these factors are used to calculate emissions from any given facility. It is possible, in some extreme cases, that orders-of-magnitude differences could result between actual and calculated emissions, depending on differences in source configurations, control equipment and operating practices. Thus, in situations where an accurate assessment of chloroform emissions is necessary, source-specific information should be obtained to confirm the existence of particular emitting operations, the types and effectiveness of control measures, and the impact of operating practices. A source test and/or material balance should be considered as the best means to determine air emissions directly from an operation.

SECTION 2
OVERVIEW OF DOCUMENT CONTENTS

As noted in Section 1, the purpose of this document is to assist Federal, State and local air pollution agencies and others who are interested in locating potential air emitters of chloroform and making gross estimates of air emissions therefrom. Because of the limited background data available, the information summarized in this document does not and should not be assumed to represent the source configuration or emissions associated with any particular facility.

This section provides an overview of the contents of this document. It briefly outlines the nature, extent and format of the material presented in the remaining sections of this report.

Section 3 of this document provides a brief summary of the physical and chemical characteristics of chloroform and an overview of its production and uses. A chemical use tree summarizes the quantities of chloroform consumed in various end use categories in the United States. This background section may be useful to someone who needs to develop a general perspective on the nature of the substance and where it is manufactured and consumed.

Section 4 of this document focuses on major industrial source categories that may discharge chloroform air emissions. This section discusses the production of chloroform, its use as an industrial feedstock, and processes which produce chloroform as a byproduct. For each major industrial source category described in Section 4, example process descriptions and flow diagrams are given, potential emission points are identified, and available emission factor estimates are presented that show the potential for chloroform emissions before and after controls employed by industry. Individual companies are named that are reported to be involved with either the production or use of chloroform, based primarily on trade publications.

The final section of this document summarizes available procedures for source sampling and analysis of chloroform. Details are not prescribed nor is any EPA endorsement given or implied to any of these sampling and analysis procedures. At this time, EPA has generally not evaluated these methods. Consequently, this document merely provides an overview of applicable source sampling procedures, citing references for those interested in conducting source tests.

The appendix located at the end of this document presents derivations of chloroform emission factors for chloroform production processes which are presented in Section 4. The development of these emission factors is discussed in detail for sources such as process vents, storage tank vents, liquid and solid waste streams, loading and handling, and leaks from process valves, pumps, compressors, and pressure relief valves.

This document does not contain any discussion of health or other environmental effects of chloroform, nor does it include any discussion of ambient air levels or ambient air monitoring techniques.

Comments on the contents or usefulness of this document are welcomed, as is any information on process descriptions, operating practices, control measures and emissions information that would enable EPA to improve its contents. All comments should be sent to:

Chief, Source Analysis Section (MD-14)
Air Management Technology Branch
U.S. Environmental Protection Agency
Research Triangle Park, N.C. 27711

SECTION 3
BACKGROUND

NATURE OF POLLUTANT

Chloroform, $CHCl_3$, is a clear, colorless liquid with an ethereal, nonirritating odor. It is nonflammable and does not form explosive mixtures at atmospheric temperatures and pressures. Physical properties of chloroform are presented in Table 1.

Chloroform is miscible with most organic solvents and slightly soluble in water. Chloroform evaporates relatively rapidly, having a vapor pressure of 21.28 kPa at 20°C.[1] The density of chloroform vapor is over four times greater than that of air; thus, in cases where concentrated gaseous emissions occur, the plume will tend to settle to the ground before dispersing.[2]

Chloroform decomposes slowly upon exposure to sunlight in the presence or absence of air, and in the dark in the presence of air. The major products of oxidative breakdown are phosgene, hydrogen chloride, chlorine, carbon dioxide, and water.

Chloroform vapor does not react with oxygen at temperatures up to 290°C; however, at 270°C, nitrogen dioxide oxidizes chloroform to form phosgene, hydrogen chloride, water, and carbon dioxide. Pyrolysis of chloroform vapor occurs at temperatures above 450°C, producing tetrachloroethylene, hydrogen chloride, and minor amounts of other chlorocarbons. Chloroform can be further chlorinated to carbon tetrachloride by elemental chlorine upon irradiation of the vapor. At 225° to 275°C, bromination of chloroform vapor yields bromochloromethanes.[1]

In the atmosphere, chloroform has a residence time of about 4 months. Residence time is defined as the time required for the concentration to decay to 1/e of its original value (e = 2.7183).[3] The major mechanism of destruction is reaction with hydroxide radicals in the troposphere to form phosgene, chloride radicals, and chlorine monoxide.[3,4]

TABLE 1. PHYSICAL PROPERTIES OF CHLOROFORM[1]

Property	Value
Synonyms: trichloromethane, methane trichloride, methyl trichloride, methenyl trichloride, trichloroform, formyl trichloride	
CAS Registry No.	67-66-3
Molecular weight	119.38
Refractive index, 20°C	1.4467
Autoignition temperature, °C	above 1,000
Flash point, °C	None
Melting point, °C	-63.2
Boiling point, °C	61.3
Specific gravity, 25/4°C	1.48069
Vapor density, 101 kPa, 0°C, kg/m^3	4.36
Surface tension, mN/m	
Air, 20°C	27.14
Air, 60°C	21.73
Water, 20°C	45.0
Heat capacity, 20°C, kJ/(kg·K)	0.979
Critical temperature, °C	263.4
Critical pressure, MPa	5.45
Critical density, kg/m^3	500
Critical volume, m^3/kg	0.002
Thermal conductivity, 20°C, W/(m·K)	0.130
Dielectric constant, 20°C	4.9
Dipole moment, C·m	3.84×10^{-30}
Heat of combustion, MJ/(kg·mol)	373
Heat of formation, 25°C, MJ/(kg·mol)	
Gas	-89.66
Liquid	-120.9
Latent heat of evaporation, at bP, kJ/kg	247
Solubility of chloroform in water, 20°C, g/kg H_2O	8.22
Solubility of water in chloroform, 22°C, g/kg chloroform	0.806
Viscosity, liquid, 20°C, mPa·s	0.563

CONTINUED

TABLE 1. (continued)

Property	Value
Vapor pressure, kPa	
0°C	8.13
10°C	13.40
20°C	21.28
30°C	32.80
40°C	48.85
50°C	70.13

Photochemical conversion of trichlorethylene in the troposphere may be a significant source of atmospheric chloroform. Laboratory experiments simulating tropospheric irradiation of trichloroethylene have shown chloroform to be one of the principal transformation products.[5] Trichloroethylene is one of the most widely used industrial chemicals in the United States. Of the estimated 145,000 Mg of trichloroethylene produced in 1979, approximately 72 percent was used in vapor degreasing of fabricated metal parts, 5 percent was used in various solvent applications, and the remainder was exported.[6] Nearly all of each year's production of trichloroethylene represents replacement of evaporative loss to the atmosphere.

OVERVIEW OF PRODUCTION AND USES

Chloroform was first produced in the United States in 1900, primarily for use as an anesthetic. It has since been replaced as an anesthetic by safer and more versatile compounds.[2]

Chloroform is currently produced in the United States by five companies at seven manufacturing facilities. Production in 1981 was estimated at a level of 350 million pounds. Approximately 17 million pounds were exported and imports were negligible.[7]

Chloroform is produced domestically by two processes, both of which produce other chloromethanes. In the most widely used production process, methanol is reacted with hydrogen chloride in a catalytic fixed bed hydrochlorination reactor to produce methyl chloride and water. The crude methyl chloride is dryed and then reacted with chlorine in a vapor phase reactor at elevated temperature and pressure to produce methylene chloride, chloroform, and some byproduct carbon tetrachloride. These products are separated by two sequential distillations.[8]

In the methane chlorination process, methane is chlorinated at a temperature of about 400°C and a pressure of about 200 kPa to produce chloroform as a coproduct with methyl chloride, methylene chloride, and carbon tetrachloride. The chloromethane coproducts are separated by four sequential distillations. The methyl chloride in the overheads from the first column can be recycled to the chlorination reactor to enhance the yield of the other chloromethanes.[9]

The current uses of chloroform are listed in Figure 1 along with the percentage for each use. The largest end use of chloroform is in the manufacture of chlorodifluoromethane (fluorocarbon 22), which accounted for 85 percent of chloroform consumption in 1981. Fluorocarbon 22 is used as a refrigerant, as an intermediate in the production of fluorocarbon resins and, to a small extent, as an aerosol propellant.

In addition to the production of fluorocarbon 22, chloroform is used in the extraction and purification of pharmaceuticals, as an intermediate in the preparation of dyes and pesticides, and as a fumigant and insecticide.[10] Prior to being banned by the Food and Drug Administration in 1976, chloroform was used in such products as toothpaste, linaments, and cough syrup.[7]

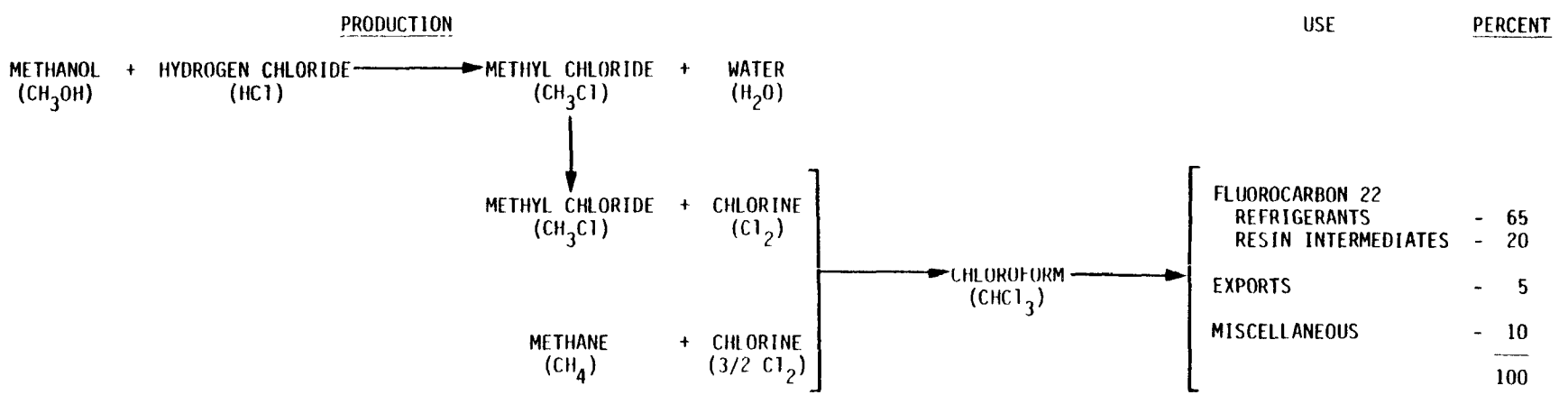

Figure 1. Chemical use tree for chloroform.[7]

SECTION 4
CHLOROFORM EMISSION SOURCES

This section discusses chloroform emissions from direct sources such as chloroform production, fluorocarbon production, and pharmaceutical manufacture. Indirect emission sources in which chloroform is formed as a byproduct are also discussed. Indirect sources of chloroform include ethylene dichloride production; perchloroethylene and trichloroethylene production; chlorination of organic precursors in process water at pulp and paper mills, industrial cooling water, and municipal drinking water and wastewater; and volatilization from various waste treatment, storage and disposal facilities, including municipal wastewater treatment plants. Process and emissions information is presented for each source for which data were available.

CHLOROFORM PRODUCTION

In the most widely used chloroform production process, methanol is hydrochlorinated to produce methyl chloride, which is then chlorinated to produce other chloromethanes, including chloroform. A second process, involving the direct chlorination of methane to produce chloromethanes, is used currently at one plant.[11] Direct chlorination of methane was used formerly at another facility; however this plant has changed its production process. The details of this new process are not currently available.[12]

Process Descriptions

Methanol Hydrochlorination/Methyl Chloride Chlorination Process --

The major products of the methanol hydrochlorination/methyl chloride chlorination process are chloroform, methyl chloride, and methylene chloride. Some byproduct carbon tetrachloride is also produced.

Basic operations that may be used in the methanol hydrochlorination/methyl chloride chlorination process are shown in Figure 2. Equimolar proportions of gaseous methanol (Stream 1) and hydrogen chloride (Stream 2) are fed to a hydrochlorination reactor maintained at a temperature of about

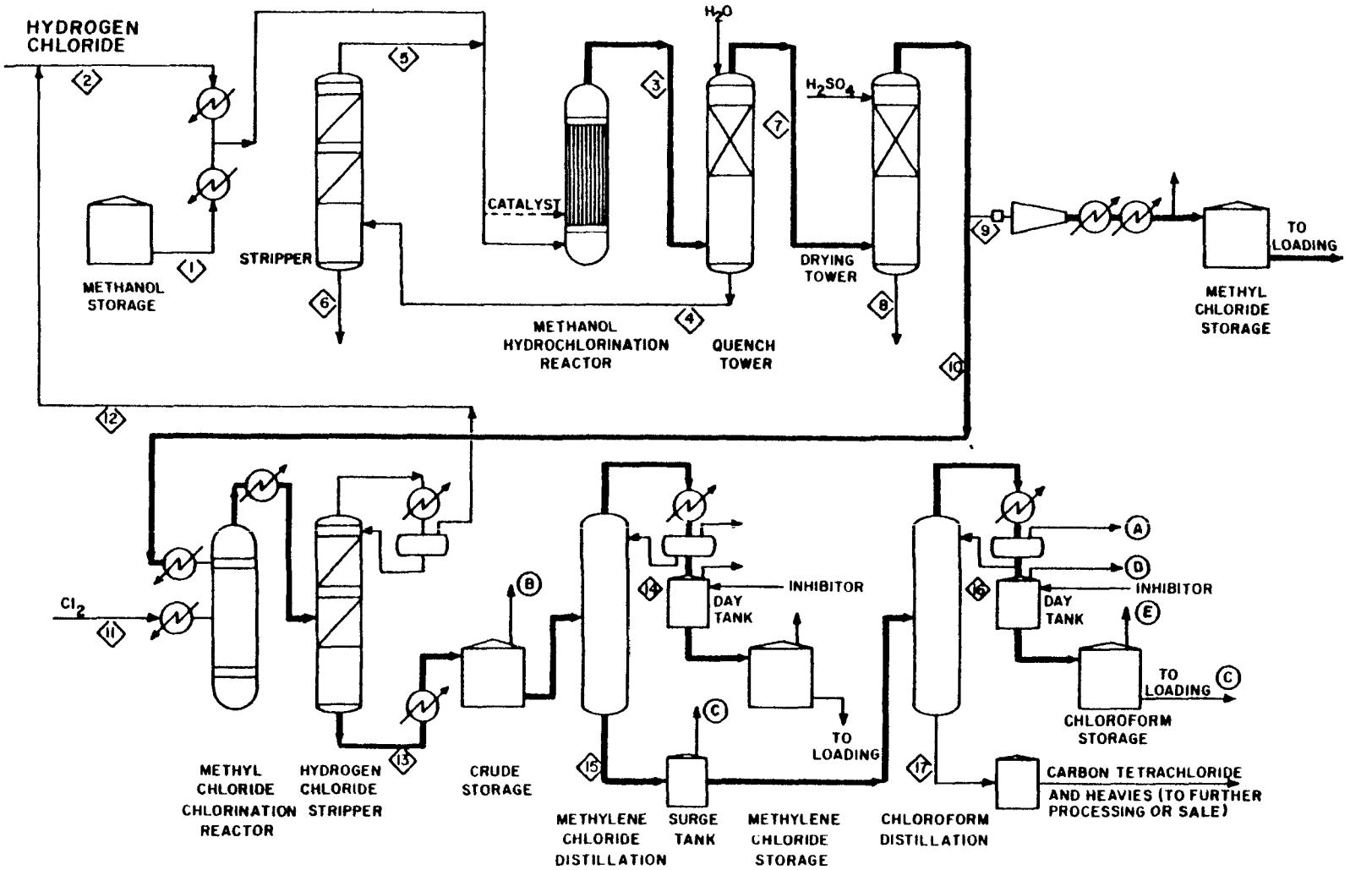

NOTE: The numbers in this figure refer to process streams, as discussed in the text, and the letters designate process vents. The heavy lines represent final product streams through the process.

Figure 2. Basic operations that may be used in the methanol hydrochlorination/methyl chloride chlorination process.[8]

350°C. The hydrochlorination reaction is catalyzed by one of a number of catalysts, including alumina gel, cuprous or zinc chloride on activated carbon or pumice, or phosphoric acid on activated carbon. Methanol conversion of 95 percent is typical.[8]

The reactor exit gas (Stream 3) is transferred to a quench tower, where unreacted hydrogen chloride and methanol are removed by water scrubbing. The water discharged from the quench tower (Stream 4) is stripped of virtually all dissolved methyl chloride and most of the methanol, both of which are recycled to the hydrochlorination reactor (Stream 5). The outlet liquid from the stripper (Stream 6) consists of dilute hydrochloric acid, which is used in-house or is sent to a wastewater treatment system.[8]

Methyl chloride gas from the quench tower (Stream 7) is fed to the drying tower, where it is contacted with concentrated sulfuric acid to remove residual water. The dilute sulfuric acid effluent (Stream 8) is sold or reprocessed.[8]

A portion of the dried methyl chloride (Stream 9) is compressed, cooled, and liquefied as product. The remainder (Stream 10) is fed to the chlorination reactor along with chlorine gas (Stream 11). The methyl chloride and chlorine react to form methylene chloride and chloroform, along with hydrogen chloride and a small amount of carbon tetrachloride.[8]

The product stream from the chlorination reactor is condensed and then stripped of hydrogen chloride. The hydrogen chloride is recycled to the methanol hydrochlorination reactor (Stream 12). The crude mixture of methylene chloride, chloroform, and carbon tetrachloride from the stripper (Stream 13) is transferred to a storage tank and then fed to a distillation column to extract methylene chloride. Bottoms from this column (Stream 15) are distilled to extract chloroform. The chloroform and methylene chloride product streams (Streams 14 and 16) are fed to day tanks where inhibitors are added and then sent to storage and loading facilities. Bottoms from chloroform distillation (Stream 17) consist of crude carbon tetrachloride, which is stored for subsequent sale or transferred to a separate carbon tetrachloride/perchloroethylene process.[8]

Methane Chlorination Process --

In the methane chlorination process, chloroform is produced as a coproduct with methyl chloride, methylene chloride, and carbon tetrachloride. Methane can be chlorinated thermally, photochemically, or catalytically, with thermal chlorination being the most commonly used method.[9]

Figure 3 presents basic operations that may be used in the methane chlorination process. Methane (Stream 1) and chlorine (Stream 2) are mixed and fed to a chlorination reactor, which is operated at a temperature of about 400°C and a pressure of about 200 kPa. Gases exiting the reactor (Stream 3) are partly condensed and then scrubbed with chilled crude product to absorb most of the product chloromethanes from the unreacted methane and byproduct hydrogen chloride. The unreacted methane and byproduct hydrogen chloride from the absorber (Stream 4) are fed serially to a hydrogen chloride absorber, caustic scrubber, and drying column to remove hydrogen chloride. The purified methane (Stream 5) is recycled to the chlorination reactor. The condensed crude chloromethane stream (Stream 6) is fed to a stripper, where it is separated into overheads, containing hydrogen chloride, methyl chloride, and some higher boiling chloromethanes, and bottoms, containing methylene chloride, chloroform, and carbon tetrachloride.[9]

Overheads from the stripper (Stream 7) are fed to a water scrubber, where most of the hydrogen chloride is removed as weak hydrochloric acid (Stream 8). The offgas from the water scrubber is fed to a dilute sodium hydroxide scrubber solution to remove residual hydrogen chloride. Water is then removed from the crude chloromethanes in a drying column.[9]

The chloromethane mixture from the drying column (Stream 9) is compressed, condensed, and fed to a methyl chloride distillation column. Methyl chloride from the distillation column can be recycled back to the chlorination reactor (Stream 10) to enhance yield of the other chloromethanes, or condensed and then transferred to storage and loading as product (Stream 11).[9]

Bottoms from the stripper (Stream 12) are neutralized, dried, and combined with bottoms from the methyl chloride distillation column (Stream 13) in a crude storage tank. The crude chloromethanes (Stream 14)

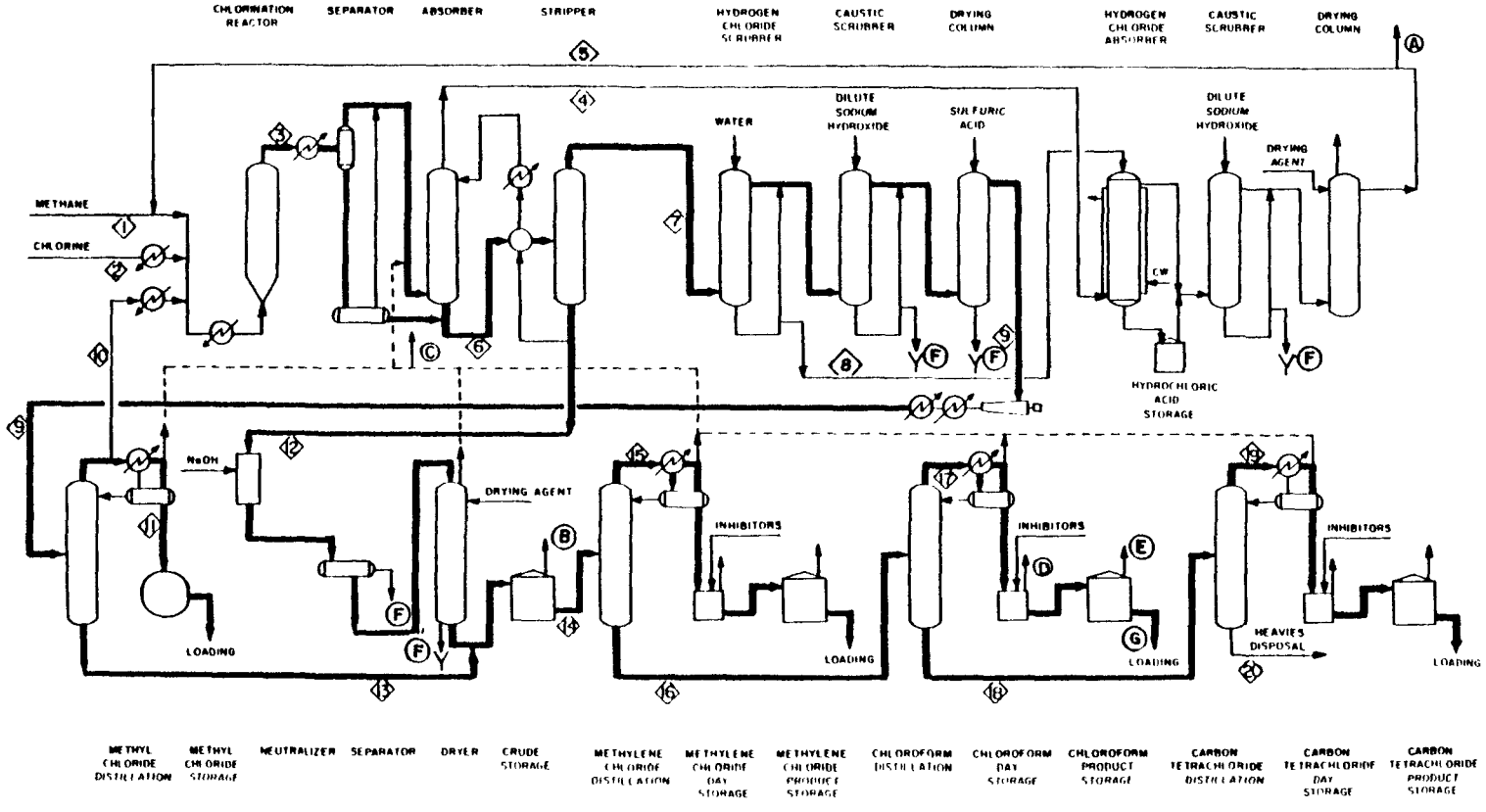

NOTE: The numbers in this figure refer to process streams, as discussed in the text, and the letters designate process vents. The heavy lines represent final product streams through the process.

Figure 3. Basic operations that may be used in the methane chlorination process.[9]

pass to three distillation columns in series which extract methylene chloride (Stream 15), chloroform (Stream 17), and carbon tetrachloride (Stream 19). Condensed methylene chloride, chloroform, and carbon tetrachloride product streams are fed to day storage tanks, where inhibitors may be added for stabilization. The product streams are then transferred to storage and loading facilities. Bottoms from the carbon tetrachloride distillation column are incinerated.[9]

Tables 2 and 3 present chloroform emission factors for the methanol hydrochlorination/methyl chloride chlorination process and the methane chlorination process, respectively. Each table lists uncontrolled emission factors for various sources, potentially applicable control techniques, and controlled emission factors associated with the identified emission reduction techniques. The derivations of these emission factors are presented in the appendix. As described in the appendix, the emission factors are based on hypothetical plants. Actual emissions for a given facility may vary because of such factors as differences in process design and age of equipment.

Source Locations

Table 4 presents a published list of major producers of chloroform.

TABLE 2. CONTROLLED AND UNCONTROLLED CHLOROFORM EMISSION FACTORS FOR A HYPOTHETICAL CHLOROFORM PRODUCTION FACILITY (METHANOL HYDROCHLORINATION/METHYL CHLORIDE CHLORINATION PROCESS)[a]

Emission source	Source designation[b]	Uncontrolled chloroform emission factor[c]	Potentially applicable control technique[c]	% reduction[d]	Controlled chloroform emission factor[c]
Chloroform distillation vent	A	0.022 kg/Mg	None	--	--
Storage					
Crude tank	B	0.061 kg/Mg	Refrigerated condenser	94	0.0037 kg/Mg
Surge tank	C	0.097 kg/Mg	Refrigerated condenser	92	0.0078 kg/Mg
Day tanks(2)	D	0.55 kg/Mg	Refrigerated condenser	95	0.0275 kg/Mg
Product tank	E	0.87 kg/Mg	Refrigerated condenser	87	0.11 kg/Mg
Handling[e]	F	0.35 kg/Mg	Refrigerated condenser	87	0.046 kg/Mg
Process fugitive[f]		1.4 kg/hr	Quarterly I/M of pumps and valves[g]	49	0.71 kg/hr
			Monthly I/M of pumps and valves	67	0.46 kg/hr
			Monthly I/M of valves; double mechanical seals on pumps; rupture disks on relief valves	77	0.32 kg/hr

[a]Any given chloroform production plant may vary in configuration and level of control from this hypothetical facility. The reader is encouraged to contact plant personnel to confirm the existence of emitting operations and control technology at a particular facility prior to estimating emissions therefrom.

[b]Letters refer to vents designated in Figure 2.

[c]Emission factors in terms of kg/Mg refer to kilogram of chloroform emitted per megagram of chloroform produced. In cases where a particular source designation applies to multiple operations, these factors represent combined emissions for all, not each, of these operations within the hypothetical facility. Emission factor derivations and references are presented in the Appendix.

[d]For refrigerated condensers, removal efficiency is based on a condenser operating temperature of -15°C and uncontrolled emission temperatures from reference 8 of 20°C for product storage and handling, of 35°C for crude storage, and of 40°C for the surge and day storage tanks. Greater removal efficiency can be achieved by using lower operating temperatures. For fugitive emissions, the derivations of the emission reductions associated with the control alternatives from reference 13 are given in Appendix A.

[e]Loading of trucks, tank cars, barges.

[f]Fugitive emission rate is independent of plant capacity.

[g]I/M refers to inspection and maintenance.

TABLE 3. CONTROLLED AND UNCONTROLLED CHLOROFORM EMISSION FACTORS FOR A HYPOTHETICAL CHLOROFORM PRODUCTION FACILITY (METHANE CHLORINATION PROCESS)[a]

Emission source	Source designation[b]	Uncontrolled chloroform emission factor[c]	Potentially applicable control technique	% reduction[d]	Controlled chloroform emission factor[c]
Recycled methane inert gas purge vent	A	0.013 kg/Mg	None	--	--
Distillation area emergency inert gas vent	C	0.032 kg/Mg	None	--	--
Storage					
Crude tank	B	0.088 kg/Mg	Refrigerated condenser	85	0.0132 kg/Mg
Day tanks(2)	D	0.55 kg/Mg	Refrigerated condenser	95	0.028 kg/Mg
Product tank	E	0.83 kg/Mg	Refrigerated condenser	87	0.11 kg/Mg
Secondary	F	0.21 kg/Mg	None	--	--
Handling[e]	G	0.35 kg/Mg	Refrigerated condenser	87	0.046 kg/Mg
Process fugitive[f]		3.1 kg/hr	Quarterly I/M of pumps and valves[g]	49	1.6 kg/hr
			Monthly I/M of pumps and valves	64	1.1 kg/hr
			Monthly I/M of valves; double mechanical seals on pumps; rupture disks on relief valves	76	0.74 kg/kg

[a]Any given chloroform production plant may vary in configuration and level of control from this hypothetical facility. The reader is encouraged to contact plant personnel to confirm the existence of emitting operations and control technology at a particular facility prior to estimating emissions therefrom.

[b]Letters refer to vents designated in Figure 3.

[c]Emission factors in terms of kg/Mg refer to kilogram of chloroform emitted per megagram of chloroform produced. In cases where a particular source designation applies to multiple operations, these factors represent combined emissions for all, not each, of these operations within the hypothetical facility. Emission factor derivations and references are presented in the Appendix.

[d]For refrigerated condensers, removal efficiency is based on a condenser operating temperature of -15°C and uncontrolled emission temperatures from reference 9 of 20°C for product storage and handling and of 35°C for the crude and day storage tanks. Greater removal efficiency can be achieved by using a lower operating temperature. For fugitive emissions, the derivations of the emission reductions associated with the control alternatives from reference 13 are given in Appendix A.

[e]Loading of trucks, tank cars, barges.

[f]Fugitive emission rate is independent of plant capacity.

[g]I/M refers to inspection and maintenance.

TABLE 4. CHLOROFORM PRODUCTION FACILITIES[14]

Company	Location	Production Process
Diamond Shamrock Corp.	Belle, WV	Methyl chloride chlorination
Dow Chemical	Freeport, TX	NA
	Plaquemine, LA	Methyl chloride chlorination
Linden Chemicals and Plastics, Inc.	Moundsville, WV	Methyl chloride chlorination
Stauffer Chemical Co.	Louisville, KY	Methyl chloride chlorination
Vulcan Materials Co.	Geismar, LA	Methyl chloride chlorination
	Wichita, KS	67% Methyl chloride chlorination 33% Methane chlorination

NA = not available

Note: This list is subject to change as market conditions change, facility ownership changes, or plants are closed down. The reader should verify the existence of particular facilities by consulting current listings or the plants themselves. The level of emissions from any given facility is a function of variables, such as throughput and control measures, and should be determined through direct contacts with plant personnel.

FLUOROCARBON PRODUCTION

The primary use for chloroform is as a feedstock for the production of chlorodifluoromethane, fluorocarbon 22 ($CHClF_2$). Fluorocarbon 22 is used as a refrigerant, as an intermediate in the production of fluorocarbon resins, and to a smaller extent, as an aerosol propellant.[10]

Process Description

Fluorocarbon 22 is produced by the catalytic liquid-phase reaction of anhydrous hydrogen fluoride (HF) and chloroform. Basic operations that may be used in the production of fluorocarbon 22 are shown in Figure 4. Chloroform (Stream 1), liquid anhydrous HF (Stream 2), and chlorine (Stream 3) are pumped from storage to the reactor, along with the recycled bottoms from the product recovery column (Stream 15) and the HF recycle stream (Stream 9). The reactor contains antimony pentachloride as a catalyst[15] and is operated at temperatures ranging from 0° to $200^{o}C$ and pressures of 100 to 3,400 kPa.[16]

Vapor from the reactor (Stream 4) is fed to a distillation column, which removes as overheads hydrogen chloride (HCl), the desired fluorocarbon products, and some HF (Stream 6). Bottoms containing vaporized catalyst, unconverted and underfluorinated species, and some HF (Stream 5) are returned to the reactor. The overhead stream from the column (Stream 6) is condensed and pumped to the HCl recovery column.[15]

Anhydrous HCl byproduct (Stream 7) is removed as overheads from the HCl recovery column, condensed, and transferred to pressurized storage as a liquid. The bottoms stream from the HCl recovery column (Stream 8) is chilled until it separates into two immiscible phases: an HF phase and a denser fluorocarbon phase. These are separated in a phase separator. The HF phase (Stream 9), which contains a small amount of dissolved fluorocarbons, is recycled to the reactor. The denser phase (Stream 10), which contains the fluorocarbons plus trace amounts of HF and HCl, is allowed to evaporate and is ducted to a caustic scrubber to neutralize the HF and HCl. The stream is then contacted with sulfuric acid and subsequently with activated alumina to remove water.[15]

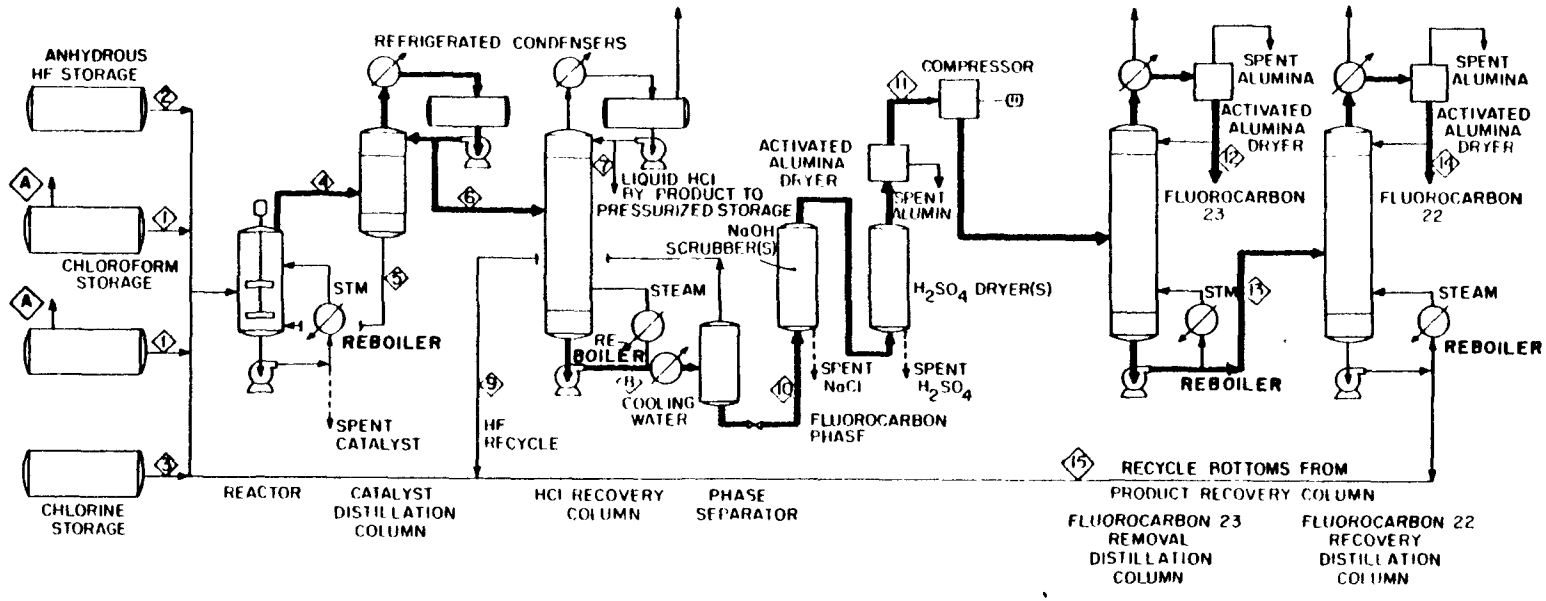

NOTE: The numbers in this figure refer to process streams, as discussed in the text, and the letters designate process vents. The heavy lines represent final product streams through the process.

Figure 4. Basic operations that may be used in fluorocarbon 22 production.[15]

The neutralized and dried fluorocarbon mixture (Stream 11) is compressed and sent to a series of two distillation columns. Overfluorinated material, fluorocarbon 23, is removed as an overhead stream in the first column (Stream 12) and fluorocarbon 22 is recovered as an overhead steam in the second column (Stream 14).[15]

There are a number of process variations in fluorocarbon production. HF may be separated from product fluorocarbons prior to hydrogen chloride removal. Processes may also differ at the stage at which fluorocarbon 22 is separated from fluorocarbon 23: the coproduct fluorocarbons can be separated by distillation and then cleaned separately. Fluorocarbon 23 may be vented rather than recovered. The HCl removal system can vary with respect to the method of removal and the type of byproduct acid obtained. After anhydrous HCl has been obtained as shown in Figure 4, it can be further purified and absorbed in water. Alternatively, the condensed overhead from catalyst distillation (Stream 6, Figure 4) can be treated with water to recover an aqueous solution of HCl contaminated with HF and possibly some fluorocarbons. In this case, phase separation HF recycle is not carried out. This latter procedure is used at many older plants in the industry.[15]

Emissions

Uncontrolled chloroform emission factors for the fluorocarbon production process are listed in Table 5 with potential control techniques and associated emission factors for controlled emissions. Potential sources of chloroform emissions include process vents; chloroform storage tanks; and fugitive emission sources such as process valves, pumps, compressors, and pressure relief valves.

None of the three sources of process emissions identified in Figure 4 are major sources of chloroform. A vent on the hydrogen chloride recovery column accumulator purges noncondensibles and small amounts of inert gases entering the system with the chlorine gas. While data are not available on the emissions from this source, potential volatile organic emissions are expected to consist of low boiling azeotropes of the highly fluorinated ethanes and methanes formed in the fluorination reactor. Vents on the product recovery distillation columns emit only fluorocarbons 22 and 23.[15]

TABLE 5. CONTROLLED AND UNCONTROLLED CHLOROFORM EMISSION FACTORS FOR A HYPOTHETICAL FLUOROCARBON 22 PRODUCTION FACILITY[a]

Emission source	Source designation[b]	Uncontrolled chloroform emission factor[c]	Potentially applicable control technique[d]	% reduction	Controlled chloroform emission factor
Storage	A	0.59[e] to 2.5[f] kg/Mg	Refrigerated condenser, or	87	0.077 to 0.33 kg/Mg
			High pressure conservation Valve and vapor balance	100	0 kg/Mg
Fugitive		--	--	--	<0.023 kg/hr[g]

[a]Any given fluorocarbon production plant may vary in configuration and level of control from this hypothetical facility. The reader is encouraged to contact plant personnel to confirm the existence of emitting operations and control technology at a particular facility prior to estimating emissions therefrom.

[b]Letters refer to vents designated to Figure 4.

[c]Emission factors in terms of kg/Mg refer to kilogram of chloroform per megagram of fluorocarbon 22 produced. In cases where a particular source designation applies to multiple operations, these factors represent combined emissions for all, not each, of these operations within the hypothetical facility.

[d]For the refrigerated condenser applied to storage emissions, the removal efficiency is based on an assumed uncontrolled emission temperature of 20°C and a condenser operating temperature of -15°C. Greater efficiency can be achieved by using a lower operating temperature. Use of a high pressure conservation vent and vapor balance has been reported by one facility with an associated efficiency of essentially 100 percent.[17]

[e]Reference 17.

[f]Reference 15.

[g]Fugitive emission rate is independent of plant capacity. For this reported controlled fugitive emission rate, the associated control technique was not presented. A controlled emission rate of <0.0052 kg/hr has been reported for another facility.[17]

Source Locations

A list of fluorocarbon 22 production facilities is presented in Table 6.

TABLE 6. FLUOROCARBON 22 PRODUCTION FACILITIES[14, 17, 18]

Company	Location
Allied Chemical Corp.	Elizabeth, NJ El Segundo, CA
E.I. duPont de Nemours and Co., Inc.[a]	Louisville, KY Montague, MI
Essex Chemical Corp. (Racon Inc., Subsidiary)	Wichita, KS
Kaiser Aluminum and Chemical Corp.	Gramercy, LA
Pennwalt Corp.	Calvert City, KY

[a]Only the duPont facility at Louisville routinely manufacturers flurocarbon 22; the company's Montague plant can produce fluorocarbon 22 on a nonroutine basis.[18]

Note: This list is subject to change as market conditions change, facility ownership changes, or plants are closed down. The reader should verify the existence of particular facilities by consulting current listings or the plants themselves. The level of emissions from any given facility is a function of variables, such as throughput and control measures, and should be determined through direct contacts with plant personnel.

PHARMACEUTICAL MANUFACTURING

Chloroform is used as a solvent in the manufacturing of pharmaceutical products by chemical synthesis.[19]

Process Description

Synthetic pharmaceuticals are normally manufactured in a series of batch operations, many of which involve the use of solvents. Figure 5 presents basic operations that may be used in a batch synthesis process. To begin a production cycle, the reactor is water washed and dried with a solvent. Air or nitrogen is usually used to purge the tank after it is cleaned. Solid reactants and solvent are then charged to the reactor. After the reaction is complete, any remaining unreacted volatile compounds and solvents are removed from the reactor by distillation and condensed. The pharmaceutical product is then transferred to a holding tank. In the holding tank, the product may be washed three to four times with water or solvent to remove any remaining reactants and byproducts. The solvent used in washing generally is evaporated from the reaction product. The crude product may then be dissolved in another solvent and transferred to a crystallizer for purification. After crystallization, the solid material is separated from the remaining solvent by centrifuging. While in the centrifuge, the product cake may be washed several times with water or solvent. Tray, rotary, or fluid-bed dryers are employed for final product finishing.[19]

Emissions

Where chloroform is used as a solvent in the manufacture of a pharmaceutical product, each step of the manufacturing process may be a source of chloroform emissions. The magnitude of emissions varies widely within and among operations; therefore, it is impossible to cite typical emission rates for various operations. Based on an industry wide mass balance,[19] at the current level of control, about 16 percent of the chloroform used in the industry is emitted to the air. Thus, the industry-wide controlled emission factor is about 160 kilograms per megagram of chloroform used.

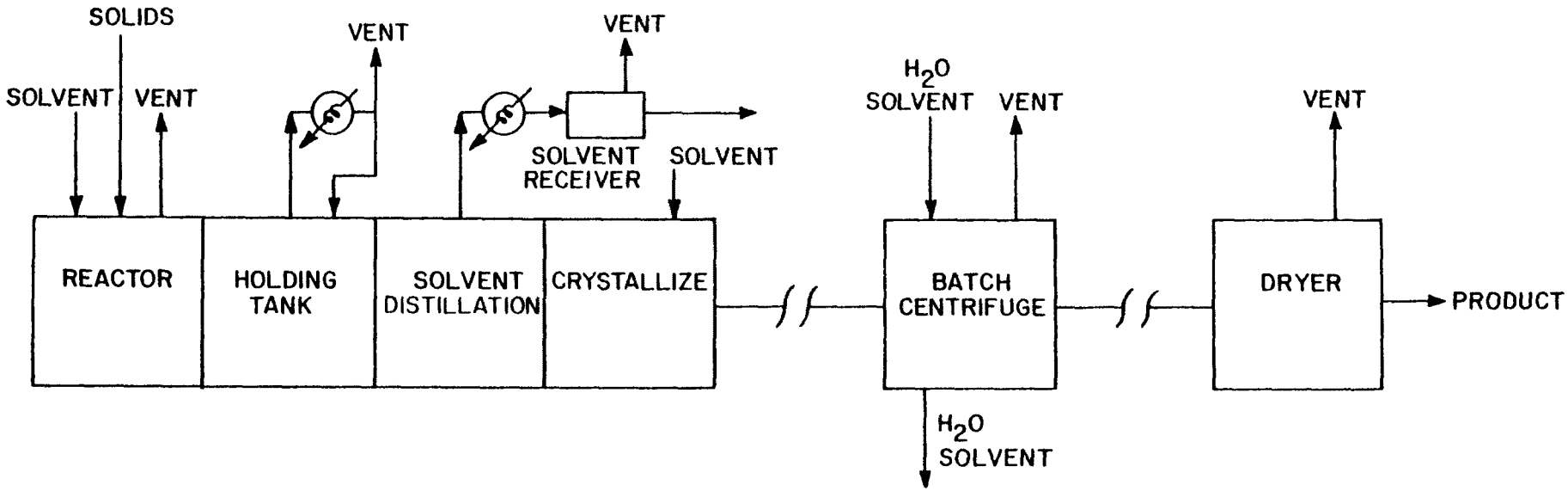

Figure 5. Basic operations that may be used in the synthetic pharmaceutical manufacturing process.[19]

An approximate ranking of emission sources has been established and is presented below in order of decreasing emission significance. The first four sources typically account for the majority of emissions from a plant.[19]

1. Dryers
2. Reactors
3. Distillation units
4. Storage and transfer
5. Filters
6. Extractors
7. Centrifuges
8. Crystallizers

Condensers, scrubbers, and carbon adsorbers can be used to control emissions from all of the above emission sources. Storage and transfer emissions can also be controlled by the use of vapor return lines, conservation vents, vent scrubbers, pressurized storage tanks, and floating roof storage tanks.[19]

Source Locations

The Standard Industrial Classification code (SIC) for pharmaceutical preparations is 2834. There are approximately 800 pharmaceutical plants producing drugs in the United States and its territories. Most of the plants are small and have less than 25 employees. Nearly 50 percent of the plants are located in 5 States: 12 percent in New York, 12 percent in California, 10 percent in New Jersey, 5 percent in Illinois, and 6 percent in Pennsylvania. These States also contain the largest plants in the industry. Puerto Rico has had the greatest growth in the past 15 years, during which 40 plants have located there. Puerto Rico now contains 90 plants or about 7.5 percent of the total. EPA's Region II (New Jersey, New York, Puerto Rico, Virgin Islands) has 340 plants (28 percent of the total); Region V (Illinois, Minnesota, Michigan, Ohio, Indiana, Wisconsin) has 215 plants (20 percent); and Region IX (Arizona, California, Hawaii, Guam, American Samoa) has 143 plants (13 percent).[19]

ETHYLENE DICHLORIDE PRODUCTION

Chloroform is formed as a byproduct during the production of ethylene dichloride (EDC). Ethylene dichloride is produced from ethylene and chlorine by direct chlorination, and ethylene and hydrogen chloride (HCl) by oxychlorination. At most production facilities, these processes are used together in what is known as the balanced process. This section discusses chloroform emissions from this process.

The balanced process generally is used wherever EDC and vinyl chloride monomer (VCM) are produced at the same facility. About 81 percent of the EDC produced domestically is used in the manufacture of VCM.[20] In VCM production, EDC is dehydrochlorinated to yield VCM and byproduct HCl. In the balanced process, byproduct HCl from VCM production via the direct chlorination/dehydrochlorination process is used in the oxychlorination/dehydrochlorination process.

Process Description

The balanced process consists of an oxychlorination operation, a direct chlorination operation, and product finishing and waste treatment operations. The raw materials for the direct chlorination process are chlorine and ethylene. Oxychlorination involves the treatment of ethylene with oxygen and HCl. Oxygen for oxychlorination generally is added by feeding air to the reactor, although some plants use purified oxygen as feed material.[21]

Basic operations that may be used in a balanced process using air for the oxychlorination step are shown in Figure 6. Actual flow diagrams for production facilities will vary. The process begins with ethylene (Stream 1) being fed by pipeline to both the oxychlorination reactor and the direct chlorination reactor. In the oxychlorination reactor the ethylene, anhydrous hydrogen chloride (Stream 2), and air (Stream 3) are mixed at molar proportions of about 2:4:1, respectively, producing 2 moles of EDC and 2 moles of water. The reaction is carried out in the vapor phase at 200 to 315°C in either a fixed-bed or fluid-bed reactor. A mixture of copper chloride and other chlorides is used as a catalyst.[21]

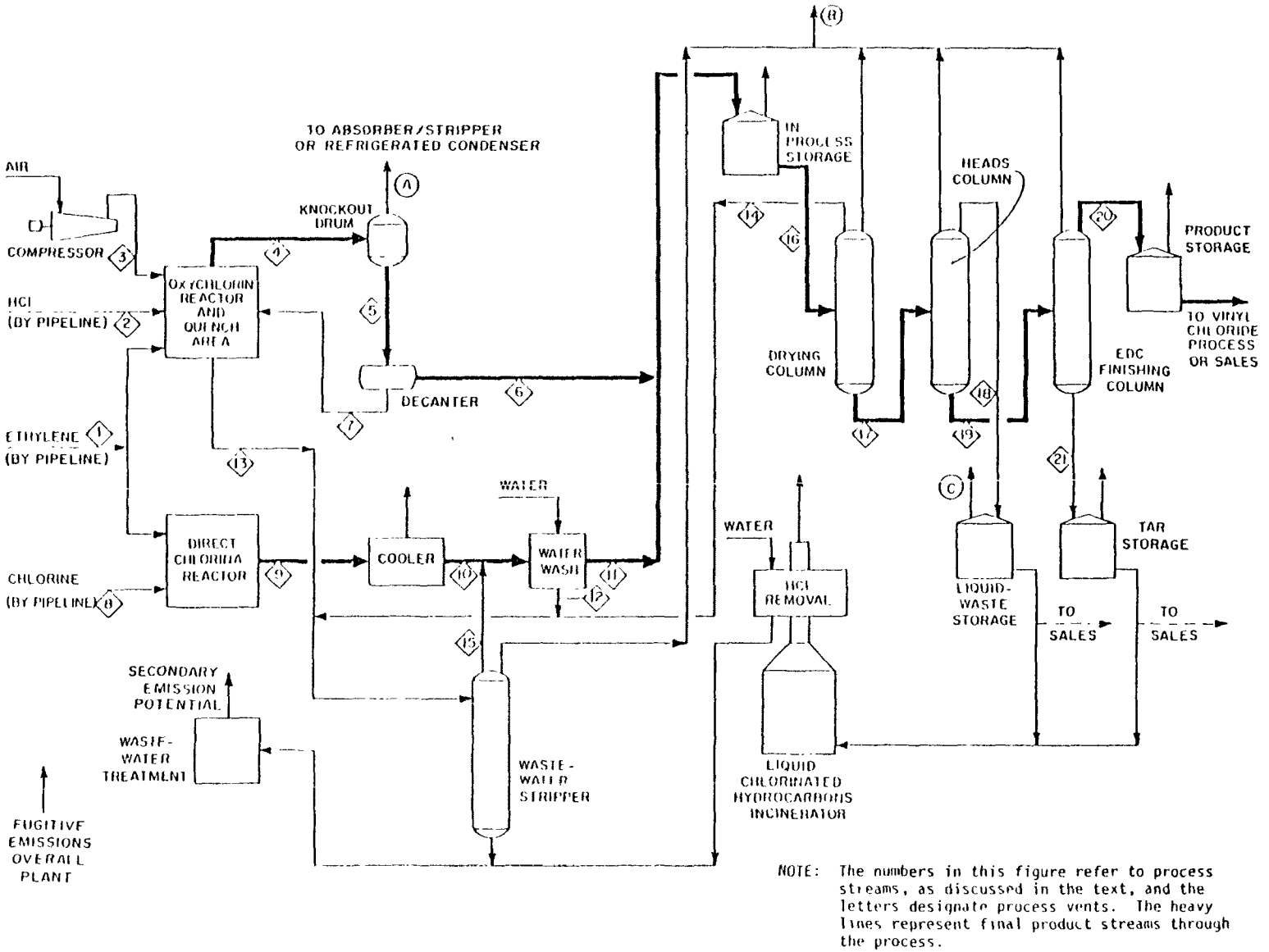

NOTE: The numbers in this figure refer to process streams, as discussed in the text, and the letters designate process vents. The heavy lines represent final product streams through the process.

Figure 6. Basic operations that may be used in the production of ethylene dichloride by the balanced process, with air-based oxychlorination.[21]

The products of reaction from the oxychlorination reactor are quenched with water, cooled (Stream 4), and sent to a knockout drum, where EDC and water (Stream 5) are condensed. The condensed stream enters a decanter, where crude EDC is separated from the aqueous phase. The crude EDC (Stream 6) is transferred to in-process storage, and the aqueous phase (Stream 7) is recycled to the quench step. Nitrogen and other inert gases are released to the atmosphere (Vent A). The concentration of organics in the vent stream is reduced by absorber and stripper columns or by a refrigerated condenser (not shown in Figure 6).[21,22]

In the direct-chlorination step of the balanced process, equimolar amounts of ethylene (Stream 1) and chlorine (Stream 8) are reacted at a temperature of 38 to 49°C and at pressures of 69 to 138 kPa. Most commercial plants carry out the reaction in the liquid phase in the presence of a ferric chloride catalyst.[21]

Products (Stream 9) from the direct chlorination reactor are cooled and washed with water (Stream 10) to remove dissolved hydrogen chloride before being transferred (Stream 11) to the crude EDC storage facility. Any inert gas fed with the ethylene or chlorine is released to the atmosphere from the cooler (Vent B). The waste wash water (Stream 12) is neutralized and sent to the wastewater steam stripper along with neutralized wastewater (Stream 13) from the oxychlorination quench area and the wastewater (Stream 14) from the drying column. The overheads (Stream 15) from the wastewater steam stripper, which consist of recovered EDC, other chlorinated hydrocarbons, and water, are returned to the process by adding them to the crude EDC (Stream 10) going to the water wash.[21]

Crude EDC (Stream 16) from in-process storage goes to the drying column, where water (Stream 14) is distilled overhead and sent to the wastewater steam stripper. The dry crude EDC (Stream 17) goes to the heads column, which removes light ends (Stream 18) for storage and disposal or sale. Bottoms (Stream 19) from the heads column enter the EDC finishing column, where EDC (Stream 20) goes overhead to product storage. The tars from the EDC finishing column (Stream 21) are taken to tar storage for disposal or sale.[21]

Several domestic EDC producers use oxygen as the oxidant in the oxychlorination reactor. Figure 7 shows basic operations that may be used in an oxygen-based oxychlorination process as presented in the literature. For

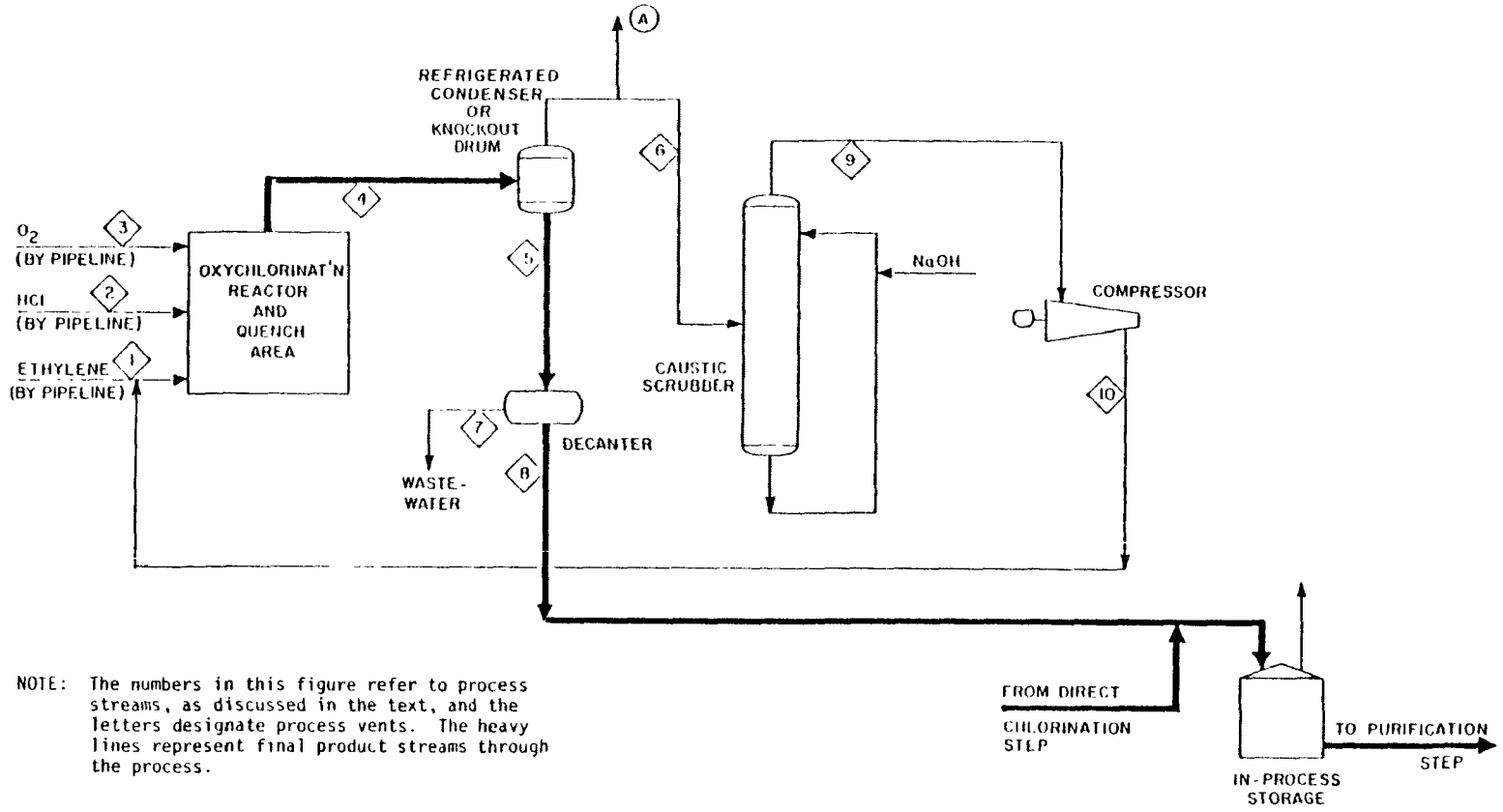

NOTE: The numbers in this figure refer to process streams, as discussed in the text, and the letters designate process vents. The heavy lines represent final product streams through the process.

Figure 7. Basic operations that may be used in the production of ethylene dichloride by the balanced process, oxygen-based oxychlorination step.[21]

a balanced process plant, the direct chlorination and purification steps are the same as those shown in Figure 6, and, therefore, are not shown again in Figure 7. Ethylene (Stream 1) is fed in large excess of the amount used in the air oxychlorination process, that is, 2 to 3 times the amount needed to fully consume the HCl feed (Stream 2). Oxygen (Stream 3) is also fed to the reactor, which may be either a fixed bed or a fluid bed. After passing through the condensation step in the quench area, the reaction products (Stream 4) go to a knockout drum, where the condensed crude EDC and water (Stream 5) produced by the oxychlorination reaction are separated from the unreacted ethylene and the inert gases (Stream 6). From the knockout drums the crude EDC and water (Stream 5) go to a decanter, where wastewater (Stream 7) is separated from the crude EDC (Stream 8), which goes to in-process storage as in the air-based process. The wastewater (Stream 7) is sent to the steam stripper for recovery of dissolved organics.[21]

The vent gases (Stream 6) from the knockout drum go to a caustic scrubber for removal of HCl and carbon dioxide. The purified vent gases (Stream 9) are then compressed and recycled (Stream 10) to the oxychlorination reactor as part of the ethylene feed. A small amount of the vent gas (Vent A) from the knockout drum is purged to prevent buildup of the inert gases entering with the feed streams or formed during the reaction.[21]

Emissions

Uncontrolled chloroform emission factors for the balanced process of EDC production are listed in Table 7. Also listed in this table are potentially applicable control techniques and associated emission factors for controlled emissions. Because of variations in process design and age of equipment, actual emissions vary for each plant.

Chloroform emission factors were developed for process vents and the storage of liquid wastes. Insufficient information was available for the calculation of chloroform emission factors for secondary emissions of chloroform from wastewater treatment or for fugitive emissions from leaks in process valves, pumps, compressors, and pressure relief valves.

TABLE 7. CONTROLLED AND UNCONTROLLED CHLOROFORM EMISSION FACTORS FOR A HYPOTHETICAL FACILITY PRODUCING ETHYLENE DICHLORIDE BY THE BALANCED PROCESS[a]

Emission source	Source designation[b]	Uncontrolled chloroform emission factor[c]	Potentially applicable control technique[d]	% reduction	Controlled chloroform emission factor[c]
Oxychlorination vent					
Air process	A	0.033 to 0.65 kg/Mg	Thermal oxidizer	98+	$\leq 6.6 \times 10^{-4}$ to 1.3×10^{-2} kg/Mg
Oxygen process	A	0.0050 to 0.12 kg/Mg	Thermal oxidizer	98+	$\leq 1.0 \times 10^{-4}$ to 2.4×10^{-3} kg/Mg
Column vents	B	1.0 kg/Mg	Thermal oxidizer	98+	≤ 0.02 kg/Mg
Liquid waste storage	C	0.003 kg/Mg	Refrigerated condenser	85	4.5×10^{-4} kg/Mg

[a]Any given EDC production plant may vary in configuration and level of control from this hypothetical facility. The reader is encouraged to contact plant personnel to confirm the existence of emitting operations and control technology at a particular facility prior to estimating emissions therefrom.

[b]Letters refer to vents designated to Figure 6, except for the oxygen-based oxychlorinator vent which is shown in Figure 7.

[c]Emission factors in terms of kg/Mg refer to kilogram of chloroform emitted per megagram of EDC produced by the balanced process. In cases where a particular source designation applies to multiple operations, these factors represent combined emissions for all, not each, of these operations within the hypothetical facility. See accompanying text for emission factor references.

[d]The control efficiency for incineration varies depending on the design of the incinerator and the compound which is burned. The 98 percent level is an estimate of the control efficiency on an incinerator with a residence time of about 0.75 seconds and a temperature of about 870°C, for a compound which is difficult to incinerate. Incinerators operating at longer residence times and higher temperatures may achieve higher efficiencies.[23] Refrigerated condenser as control technique for emissions from liquid waste storage and associated reduction of 85% from reference 21.

Process Emissions --

Chloroform process emissions originate from the purging of inert gases from the oxychlorination vent (Vent A, Figures 6 and 7) and from the release of gases from the column vents (Vent B, Figure 6), primarily the heads column. Chloroform was not detected in an emissions test of a direct chlorination vent.[24]

The range of emission factors for the oxychlorination vent in the air based process was determined from chloroform emission rates and associated EDC production rates reported by three facilities. The lowest emission factor, 0.033 kg/Mg, was calculated from a chloroform emission rate of 2700 kg/yr[25] and an associated EDC production rate of 83,000 Mg/yr.[26] The highest chloroform emission factor, 0.65 kg/Mg was calculated from a chloroform rate of 64,400 kg/yr and an associated EDC production rate of 99,800 Mg/yr.[27] An intermediate value, 0.15 kg/Mg, was calculated from a chloroform emission rate of 7,500 kg/yr[28] and an EDC production rate of 50,000 Mg/yr.[29]

Data on the chloroform concentration in the oxychlorination vent emissions from the oxygen-based process were not available; therefore, the emission factor for this process was calculated using emission composition data from the air-based process. It was assumed that the percentage of chloroform in total chlorinated hydrocarbon emissions is the same for the air-based and oxygen-based processes. However, according to composition data for oxychlorination vent emissions for hypothetical plants of the two processes, chlorinated hydrocarbons are a smaller component of total VOC in the oxygen-based process (9.6 percent) than in the air-based process (64 percent).[21] Thus, the ratio of these two percentages (0.15) was used to account for the smaller proportion of chlorinated hydrocarbons in the emissions from the oxygen-based process.

The emission factor for the column vents (Vent B, Figure 6) was based on a published chloroform emission factor for the heads column of 2.2 kg of chloroform emitted per Mg EDC produced by oxychlorination.[30] The chloroform emission factor for the balanced process was calculated by multiplying by the hypothetical plant EDC production by oxychlorination of 46.3 percent of total EDC production.[21]

Many plants incinerate vent gases from the oxychlorination reactor and column vents to reduce atmospheric emissions of volatile organics. This includes plants using the air-based as well as the oxygen-based oxychlorination processes.[31] Thermal oxidation is estimated to reduce chloroform emissions by 98 percent or greater. Incineration destruction efficiency varies with emission stream properties and incinerator operating parameters. The 98 percent efficiency level is based on incinerator operation at 870°C and 0.75 second residence time for a compound which is difficult to incinerate.[23] The emission reduction may be greater for longer residence times or higher operating temperatures

Storage Emissions --

The uncontrolled chloroform emission factor for the storage of waste-liquid light ends (Vent D, Figure 6) was calculated from a VOC emission factor of 0.030 kg/Mg.[21] It was assumed that the gaseous emissions from this source have the same concentration of chloroform as the light ends (10 percent).[32]

Source Locations

Major EDC producers and production locations are listed in Table 8.

TABLE 8. ETHYLENE DICHLORIDE PRODUCTION FACILITIES[14,22]

Manufacturer	Location
Atlantic Richfield Co. ARCO Chem. Co., div.	Port Arthur, TX
Diamond Shamrock	Deer Park, TX
Dow Chem. U.S.A.	Freeport, TX Oyster Creek, TX Plaquemine, LA
E.I. duPont de Nemours & Co., Inc. Conoco Inc., subsid. Conoco Chems. Co. Div.	Lake Charles, LA
Ethyl Corp. Chems. Group	Baton Rouge, LA Pasadena, TX
Formosa Plastics Corp., U.S.A.	Baton Rouge, LA Point Comfort, TX
Georgia-Pacific Corp. Chem. Div.	Plaquemine, LA
The BF Goodrich Co. BF Goodrich Chem. Group	La Porte, TX Calvert City, KY Convent, LA
PPG Indust., Inc. Indust. Chem. Div.	Lake Charles, LA
Shell Chem. Co.	Deer Park, TX
Union Carbide Corp. Ethylene Oxide Derivatives Div.	Taft, LA Texas City, TX
Vulcan Materials Co. Vulcan Chems., div.	Geismar, LA

Note: This list is subject to change as market conditions change, facility ownership changes, or plants are closed down. The reader should verify the existence of particular facilities by consulting current lists or the plants themselves. The level of emissions from any given facility is a function of variables, such as throughput and control measures, and should be determined through direct contacts with plant personnel.

PERCHLOROETHYLENE AND TRICHLOROETHYLENE PRODUCTION

Chloroform is formed as a byproduct during the production of perchloroethylene (PCE) and trichloroethylene (TCE). PCE and TCE are produced separately or as coproducts by either chlorination or oxychlorination of ethylene dichloride (EDC) or other C_2 chlorinated hydrocarbons. The relative proportions of the two products are determined by raw material ratios and reactor conditions.[33]

Process Descriptions

Ethylene Dichloride Chlorination Process --

The major products of the EDC chlorination process are TCE, PCE, and hydrogen chloride. Basic operations that may be used in the EDC chlorination process are shown in Figure 8.

Ethylene dichloride (Stream 1) and chlorine (Stream 2) are vaporized and fed to the reactor. Other chlorinated C_2 hydrocarbons or recycled chlorinated hydrocarbon byproducts may also be fed to the reactor. The chlorination is carried out at 400° to $450^{o}C$, slightly above atmospheric pressure. Hydrogen chloride byproduct (Stream 3) is separated from the chlorinated hydrocarbon mixture (Stream 4) produced in the reactor. The chlorinated hydrocarbon mixture (Stream 4) is neutralized with sodium hydroxide solution (Stream 5) and dried.[33]

The dried crude product (Stream 7) is separated by a distillation column into crude TCE (Stream 8) and crude PCE (Stream 9). The crude TCE (Stream 8) is fed to two columns in series which remove light ends (Stream 10) and heavy ends (Stream 13). TCE (Stream 12) is taken overhead from the heavy ends column and sent to TCE storage; the heavy ends (Stream 13) and the light ends (Stream 10) are combined, stored, and recycled.[33]

The crude PCE (Stream 9) from the PCE/TCE separation column is sent to the PCE column, where PCE (Stream 14) is removed as an overhead stream to PCE storage. Bottoms from this column (Stream 15) are sent to a heavy ends column and separated into heavy ends and tars. Heavy ends (Stream 16) are stored and recycled, and tars are incinerated.[33]

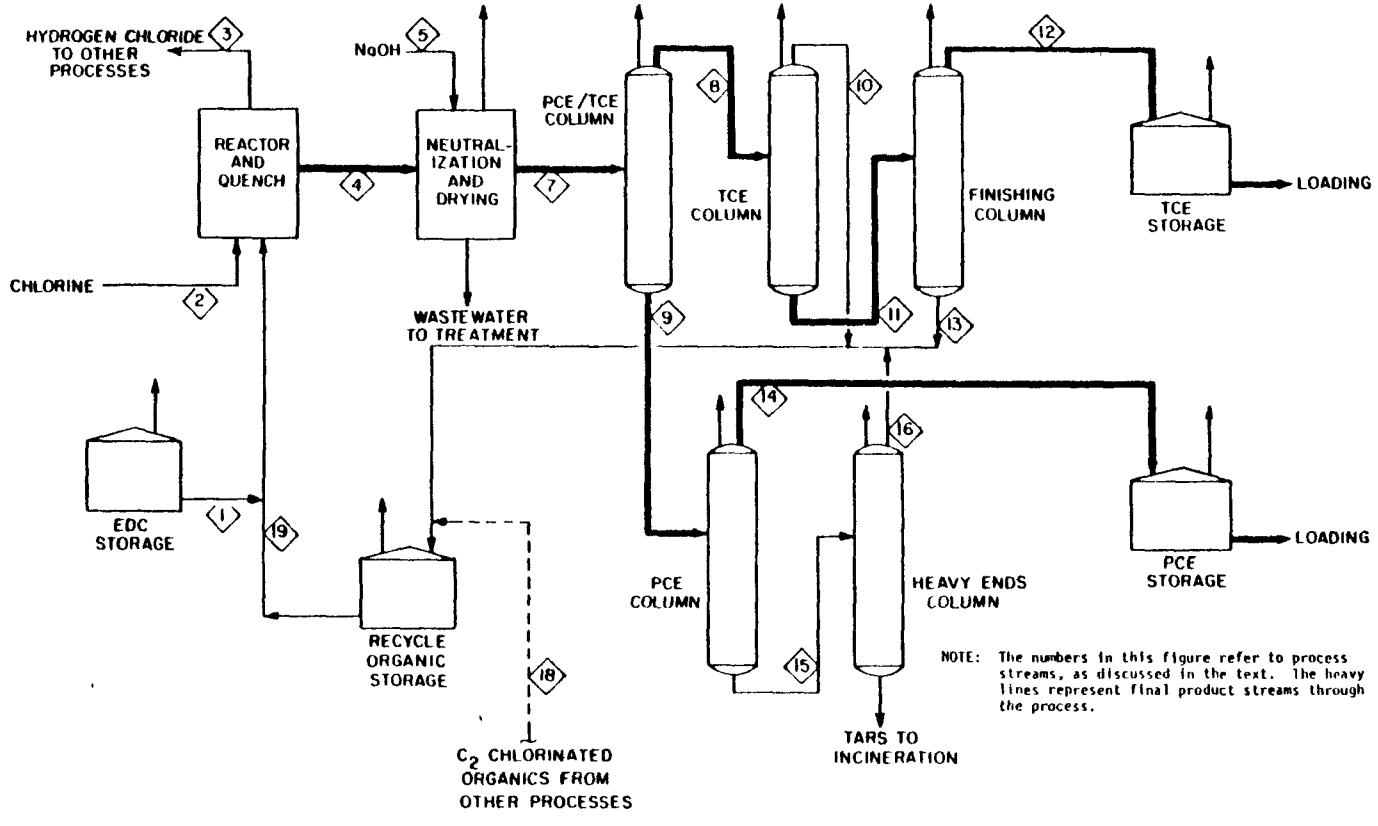

Figure 8. Basic operations that may be used in perchloroethylene and trichloroethylene production by chlorination of ethylene dichloride.[33]

Ethylene Dichloride Oxychlorination Process --

The major products of the EDC oxychlorination process are TCE, PCE, and water. The crude product contains 85 to 90 weight percent PCE plus TCE and 10 to 15 weight percent byproduct organics. Essentially all byproduct organics are recovered during purification and are recycled to the reactor. The process is very flexible, so that the reaction can be directed toward the production of either PCE or TCE in varying proportions. Side reactions produce carbon dioxide, hydrogen chloride, and several chlorinated hydrocarbons. Figure 9 shows basic operations that may be used in oxychlorination.[33]

EDC (Stream 1), chlorine or hydrogen chloride (Stream 2), and oxygen (Stream 3) are fed in the gas phase to a fluid-bed reactor. The reactor contains a vertical bundle of tubes with boiling liquid outside the tubes which maintains the reaction temperature at about 425°C. The reactor is operated at pressures slightly above atmospheric, and the catalyst, which contains copper chloride, is continuously added to the tube bundle with the crude product.[33]

The reactor product stream (Stream 4) is fed serially to a water cooled condenser, a refrigerated condenser, and a decanter. The noncondensed inert gases (Stream 5), consisting of carbon dioxide, hydrogen chloride, nitrogen, and a small amount of uncondensed chlorinated hydrocarbons, are fed to an absorber, where hydrogen chloride is recovered by absorption in process water to make byproduct hydrochloric acid. The remaining inert gases are purged (Vent A).[33]

In the decanter, the crude product (Stream 7) is separated from the aqueous phase and catalyst fines (Stream 8) and sent to the drying column for removal of dissolved water by azeotropic distillation. The dried crude product (Stream 10) is separated into crude TCE (Stream 11) and crude PCE (Stream 12) in a PCE/TCE column. The aqueous phase from the decanter (Stream 8) and the water from the drying column (Stream 9) are sent to waste treatment.[33]

The crude TCE (Stream 11) is sent to the TCE column, where light ends (Stream 13) are removed to be stored and recycled. The bottoms (Stream 14), containing mainly TCE, are neutralized with ammonia and then dried to produce finished TCE (Stream 15) which is sent to the TCE storage.[33]

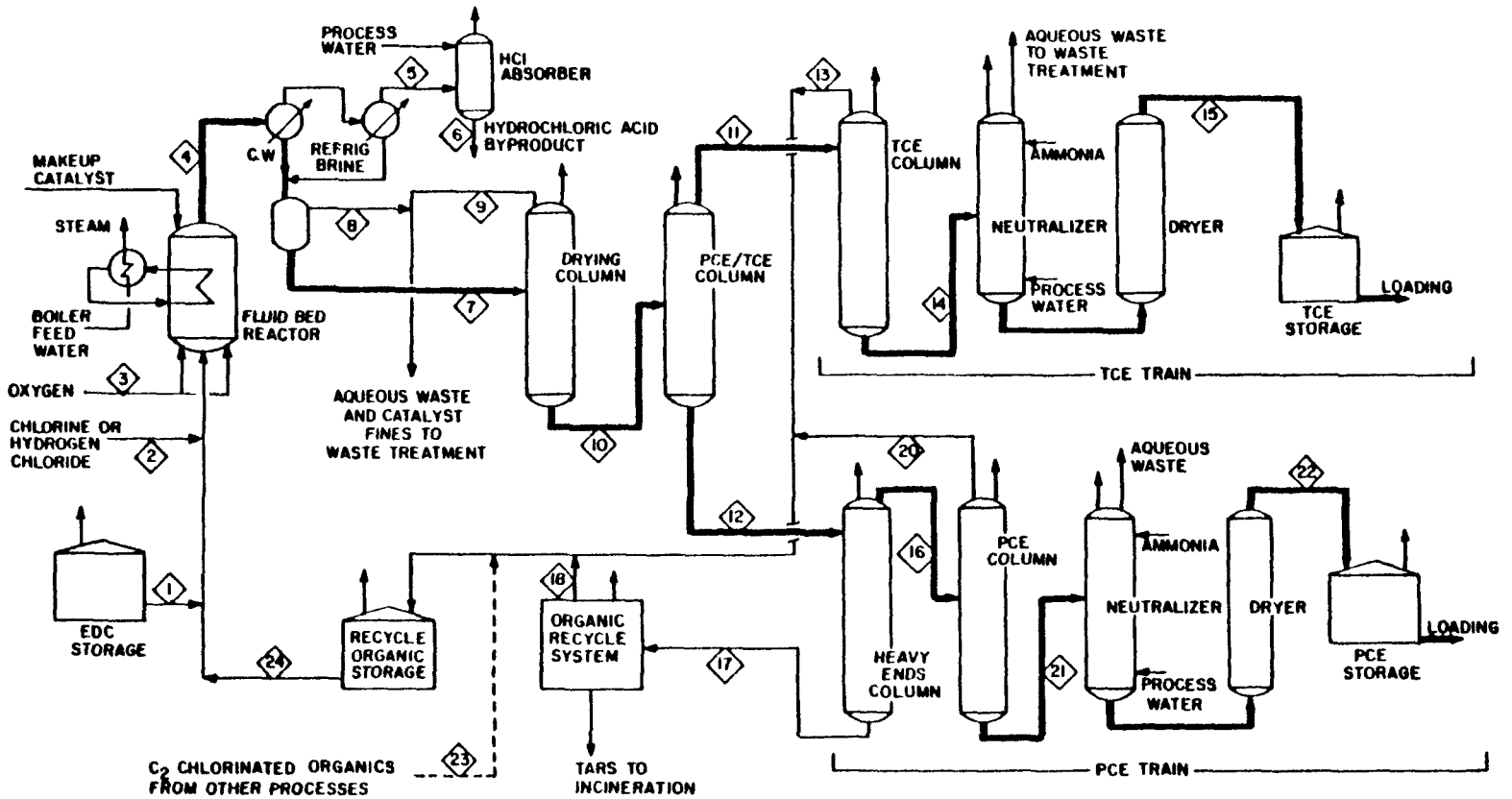

NOTE: The numbers in this figure refer to process streams, as discussed in the text. The heavy lines represent final product streams through the process.

Figure 9. Basic operations that may be used in perchloroethylene and trichloroethylene production by oxychlorination of ethylene dichloride.[33]

The crude PCE (Stream 12) from the PCE/TCE separation column is fed to a heavy ends removal column where PCE and lights (Stream 16) go overhead to a PCE finishing column and the heavies (Stream 17) remaining as the bottoms are sent to the organic recycle system. Here the organics that can be recycled (Stream 18) are separated from tars and sent to the recycle organic storage. The tars are incinerated. The PCE and light ends (Stream 16) from the heavy ends column are fed to a light ends removal column. Light ends (Stream 20) are removed overhead and are stored and recycled. The PCE bottoms (Stream 21) are neutralized with ammonia and then dried to obtain finished PCE (Stream 22) which is sent to the PCE storage.[33]

Emissions

Insufficient information is available to estimate chloroform emissions from process vents, recycle organic storage, and process fugitive emission sources. However, a secondary chloroform emission source has been reported by one facility that produces perchloroethylene by EDC chlorination. This facility removes volatile organic compounds from process wastewater with a wastewater stripper. The uncontrolled chloroform emission factor for this source was calculated as 3.0 kilograms/megagram (kg/Mg) of perchloroethylene produced, using a production rate of 91 Mg/day[34] and assuming 24 hours/day operation. The facility controls emissions from the wastewater stripper with two condensers in series, effecting a 96 percent chloroform emission reduction.[34] Thus, the controlled chloroform emission factor for the wastewater stripper is 0.12 kg/Mg. It cannot be determined from the available literature whether wastewater stripping is conducted at other perchloroethylene and/or trichloroethylene production facilities.

Source Locations

Major producers of perchloroethylene and/or trichloroethylene are listed in Table 9.

TABLE 9. FACILITIES PRODUCING PERCHLOROETHYLENE AND/OR TRICHLOROETHYLENE[14]

Company	Location	Chemical produced	
		PCE[a]	TCE[b]
Diamond Shamrock Corp.	Deer Park, TX	X	
Dow Chemical U.S.A.	Freeport, TX	X	X
	Pittsburg, CA	X	
	Plaquemine, LA	X	
I.E. duPont de Nemours and Co., Inc.	Corpus Christi, TX	X	
PPG Industries, Inc.	Lake Charles, LA	X	X
Stauffer Chemical Co.	Louisville, KY[c]	X	
Vulcan Materials Co.	Geismar, LA	X	
	Wichita, KS	X	

[a]PCE = perchloroethylene

[b]TCE = trichloroethylene

[c]Plant has been on standby since 1981.

Note: This is a list of major facilities producing perchloroethylene and/or trichloroethylene by any production process. Current information on which of these facilities produce these chemicals by ethylene dichloride chlorination or oxychlorination is not available. This list is subject to change as market conditions change, facility ownership changes, or plants are closed down. The reader should verify the existence of particular facilities by consulting current listings or the plants themselves. The level of emissions from any given facility is a function of variables, such as throughput and control measures, and should be determined through direct contacts with plant personnel.

CHLORINATION OF ORGANIC PRECURSORS IN WATER

Chloroform is produced in the aqueous reaction of chlorine with various organic compounds in water. Potential sources of this indirect chloroform production include the bleaching of aqueous suspensions of wood pulp with chlorine at pulp and paper mills, the chlorination of industrial cooling waters to control biofouling within heat transfer systems, and the disinfection of municipal wastewater and drinking water supplies via chlorination.

Pulp and Paper Industry

Chloroform is produced in process water at pulp and paper mills where wood pulp is bleached with chlorine. Chloroform is formed from the aqueous reaction of chlorine with organic substances in the wood pulp and is released to the air during the bleaching process, the subsequent treatment of effluent, and after release of the treated effluent to receiving waters.

Process Description --

In the pulp and paper industry, wood and other fibrous materials such as wastepaper are treated to produce pulp, which can be processed to produce paper, paperboard, or such products as rayon, cellophane, and explosives. The production of pulp, paper, and paperboard involves several standard manufacturing process steps as shown in Figure 10. Major steps include raw material preparation, pulping, bleaching, and papermaking.[35]

The major raw material in the pulp and paper industry is wood. The raw material preparation step includes log washing, bark removal, and chipping.[35]

In pulping, wood chips and other cellulosic raw materials are treated to form pulp suitable for processing into paper or other products. There are two primary pulping processes: mechanical pulping and chemical pulping. Chemical pulping involves the cooking of wood chips in solutions of chemicals. Chemical pulping processes now in use are alkaline processes such as the soda and kraft processes, the sulfite process, and the semi-chemical process. The kraft process is most commonly used. In mechanical pulping, wood chips are ground mechanically to produce pulp. Where wastepaper or other secondary fibers are used as raw materials, removal of ink, fillers, coatings, and other noncellulosic materials from the wastepaper (deinking) may be necessary to reclaim a useful pulp.[35]

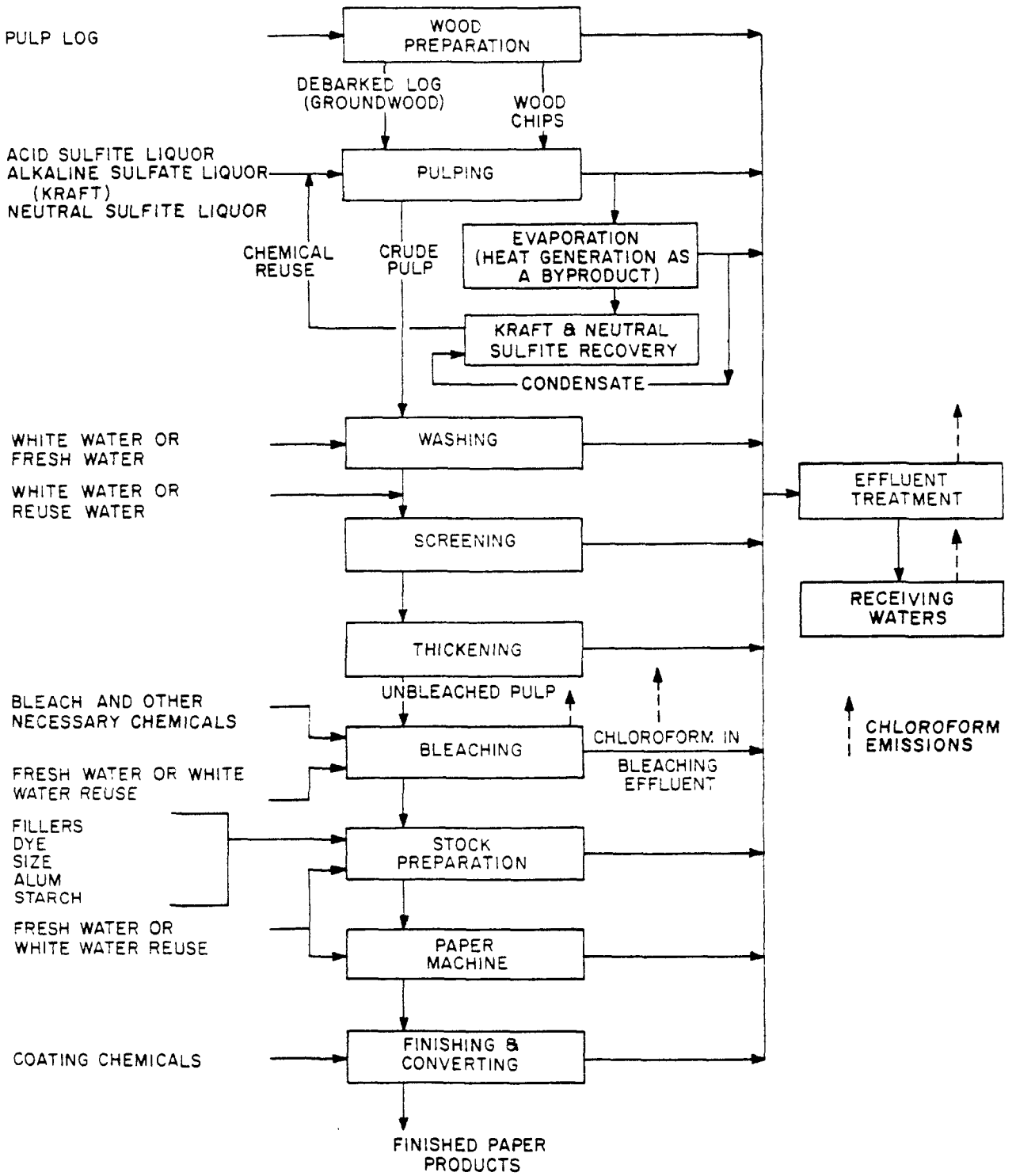

Figure 10. Basic operations that may be used in the pulp and paper manufacturing process.[35]

Due to the presence of lignins or resins, pulp is brown or deeply colored. Thus, it must be bleached if a white or light colored product is to be produced. Mechanical pulp generally is bleached with hydrosulfites and peroxides while chlorine, calcium hypochlorite, sodium hypochlorite, and chlorine dioxide are most commonly employed in bleaching chemical pulp. Bleaching is performed in a number of stages. Each stage consists of a reaction tower in which the pulp is retained with the chemical agent for a given time period and then washed on vacuum washers or diffusers before being discharged to the next stage. High-brightness kraft pulps normally require five stages with a common sequence being: 1) chlorination and washing, 2) alkaline extraction and washing, 3) chlorine dioxide addition and washing, 4) alkaline extraction and washing, and 5) chlorine dioxide addition and washing. Three stages generally are used in semi-bleached kraft operations and for the bleaching of sulfite papergrade pulps.[35]

Following the bleaching process, the pulp is prepared for marketing or converted to paper products. Pulp products include dissolving kraft and sulfite pulps for the production of rayon, cellophane, and explosives and kraft and sulfite pulps for paper manufacturing at nonintegrated mills. The pulp may also be used on site to prepare a variety of products including newsprint, tissue papers, fine papers such as printing and writing papers, coarse papers such as packaging papers, and paperboard.[35]

Emissions --

When chlorine or chlorine compounds are used to bleach pulp, organic substances in the pulp are chlorinated to produce a variety of organics including chloroform, which becomes dissolved in process water. Chloroform is released to the atmosphere from this process water primarily during wastewater treatment. Although some chloroform probably evaporates from process water during the bleaching process and the transport of bleaching plant effluent to the treatment plant, no information is available on chloroform emissions prior to wastewater treatment.

The majority of mills treat their effluent on site. Biological treatment systems are extensively employed at these types of mills, with aerated stabilization the most common process used. For pulp and paper plants that do

not have their own waste treatment facilities, the chloroform in their bleach plant effluent will not be released to the atmosphere on site but during transport of the effluent to and treatment at a publicly owned treatment plant.

Some chloroform remains in the effluent after treatment, with reported concentrations ranging from 6 to 433 micrograms/liter (μg/l).[35] This remaining chloroform is discharged to receiving waters, where it continues to evaporate after mixing with natural surface waters.

Table 10 presents chloroform emission factors for eight subcategories of pulp and paper industry products for which chlorine compounds are used in bleaching operations: dissolving kraft pulp; market bleached kraft pulp; bleached kraft paperboard, coarse papers, and tissue papers; soda and kraft fine bleached papers; dissolving sulfite pulp; sulfite paper and papergrade pulp; deink-fine papers; and deink-tissue papers. This categorization was used by EPA in the development of effluent guidelines and is based on a number of factors including effluent characteristics, raw materials used, products manufactured, and production processes employed. The emission factors were developed from chloroform mass balance calculations using measured chloroform concentrations in the wastewater treatment system influents and effluents at a number of mills.[35]

Emission factors are presented for the calculation of chloroform emissions at pulp and paper mill wastewater treatment facilities. For mills that do not have their own treatment facilities, these emission factors could be used to estimate chloroform emissions due to mill effluents at the publicly owned treatment works to which the mills discharge their wastewaters. Emission factors for calculating chloroform emissions after the discharge of the treated effluent into receiving waters are also presented. These emission factors were calculated assuming all of the chloroform released in treated effluents will eventually evaporate. The time rate and spatial distribution of these emissions will depend on the characteristics of the receiving waters.

Source Locations --

Table 11 presents a list of pulp and paper mills and their locations by subcategory and includes the percentage of mills in each category that treat effluent on site. Included are mills categorized as miscellaneous integrated

TABLE 10. UNCONTROLLED CHLOROFORM EMISSION FACTORS FOR HYPOTHETICAL PULP AND PAPER MILLS

Source type	Chloroform concentration in process water (μg/l)			Process water flow (10^3 l/Mg product)	Chloroform emission factors (kg/Mg product)[a]	
	Influent	Effluent	Difference		During wastewater treatment	After wastewater treatment
Integrated Mills						
Dissolving kraft pulp	647	67	580	198	0.12	0.013
Market bleached kraft pulp	1,405	12	1,393	159	0.22	0.0019
Bleached kraft paperboard, coarse papers, and tissue papers	1,550	6	1,544	150	0.23	0.00090
Soda and kraft fine bleached papers	1,148	52	1,096	114	0.13	0.0059
Dissolving sulfite pulp	268	13	255	270	0.069	0.0035
Sulfite papergrade pulp and papers	2,677	433	2,244	171	0.38	0.074
Secondary Fiber Mills						
Deink - fine papers	4,190	145	4,045	90	0.36	0.013
Deink - tissue papers	1,367	55	1,312	121	0.16	0.0067

[a]Emission factors refer to kilograms of chloroform emitted per Megagram of total products produced (pulp and/or paper). Where the product is pulp prepared for market, product weight is on the basis of air-dried pulp (10 percent moisture). Where the product is paper or paperboard, product weight includes any coatings applied to the product.[36] The reader is encouraged to contact plant personnel to confirm the existence of emitting operations and control technology at a particular facility prior to estimating emissions therefrom.

TABLE 11. PULP AND PAPER MILLS[37]

Source type	Company	Location	Percentage of mills treating effluent on-site
Dissolving kraft pulp	International Paper Co.	Natchez, MS	100
	Buckeye Cellulose Corp.	Perry (Foley), FL	
	ITT Rayonier Inc.	Jesup, GA	
Market bleached kraft pulp	Western Kraft	Hawesville, KY	100
	Louisiana-Pacific Corp.	Samoa, CA	
	Georgia Pacific Corp.	Zachary, LA	
	Diamond International Corp.	Old Town, ME	
	Crown Simpson & Fairbanks	Eureka, CA	
	Brunswick Pulp & Paper Co.	Brunswick, GA	
	Weyerhaeuser Co.	New Bern, NC	
	Weyerhaeuser Co.	Everett, WA	
	Consolidated Papers	Wisconsin Rapids, WI	
	Alabama River Pulp Co.	Clairborne, AL	
	Scott Paper Co.	Hinckley (Skowhegan), ME	
	Hammermill	Selma, AL	
	Proctor & Gamble	Oglethorpe, GA	
Bleached kraft paperboard, coarse papers and tissue papers	American Can Co.	Butler, AL	100
	American Can Co.	Halsey, OR	
	Temple-Eastex, Inc.	Diboll, TX	
	Continental Forest Industries	Augusta, GA	
	Potlatch Corp.	Lewiston, ID	
	Federal Paperboard Co. Inc.	Riegelwood, NC	
	International Paper Co.	Texarkana, TX	
	Gulf States Paper Corp.	Demopolis, AL	
	Potlatch Corp.	McGhee, AR	

CONTINUED

TABLE 11. (continued)

Source type	Company	Location	Percentage of mills treating effluent on-site
Soda and kraft fine bleached papers	Appleton Papers Corp.	Roaring Spring, PA	94
	Scott Paper Co.	Westbrook, ME	
	Scott Paper Co.	Muskegon, MI	
	Simpson Paper Co.	Anderson, CA	
	P.H. Glatfelter Co.	Spring Grove, PA	
	International Paper Co.	Jay, ME	
	International Paper Co.	Ticonderoga, NY	
	International Paper Co	Bastrop, LA	
	Champion International Corp.	Pasadena, TX	
	Champion International Corp.	Courtland, AL	
	Boise Cascade Corp.	Rumford, ME	
	Westvaco	Luke, MD	
	Nekoosa Papers Inc.	Port Edwards, WI	
	Nekoosa Papers Inc.	Ashdown, AR	
	Penntech Papers Inc.	Johnsonburg, PA	
	Mead Corp.	Escanaba, MI	
	Mead Corp.	Chillicothe, OH	
	Boise Cascade Corp.	International Falls, MN	
	Hammermill Paper Co.	Erie, PA	
	Mead Corp.	Kingsport, TN	
Dissolving sulfite pulp	Weyerhaeuser Co.	Cosmopolis, WA	100
	Alaska Lumber & Pulp Co.	Sitka, AK	
	Louisiana-Pacific Corp.	Ketchikan, AK	
	ITT Rayonier Inc.	Hoquiam, WA	
	ITT Rayonier Inc.	Port Angeles, WA	
	ITT Rayonier Inc.	Fernandina Bch, Fl	

CONTINUED

TABLE 11. (continued)

Source type	Company	Location	Percentage of mills treating effluent on-site
Sulfite paper and papergrade pulp	Georgia Pacific Corp.	Bellingham, WA	80
	Scott Paper Co.	Everett, WA	
	Nekoosa Papers Inc.	Port Edwards, WI	
	St. Regis Paper Co.	Rhinelander, WI	
	Flambeau Paper Co.	Park Falls, WI	
	Boise Cascade Corp.	Salem, OR	
	Wausau Paper Mills	Brokaw, WI	
	Badger Paper Mills Inc.	Peshtigo, WI	
	Consolidated Papers Inc.	Appleton, WI	
	Finch Pruyn & Co. Inc.	Glens Falls, NY	
	Weyerhaeuser Co.	Rothschild, WI	
	American Can Co.	Green Bay, WI	
	Procter & Gamble Paper Products Co.	Mehoopany, PA	
	Procter & Gamble Paper Products Co.	Green Bay, WI	
Miscellaneous integrated	Longview Fibre Co.	Longview, WA	74
	Boise Southern Co.	Deridder, LA	
	St. Regis Paper Co.	Tacoma, WA	
	St. Regis Paper Co.	Cantonment (Pensacola), FL	
	St. Joe Paper Co.	Port St. Joe, Fl	
	Chesapeake Corp. of Virginia	West Point, VA	
	Hoerner Waldorf	Missoula, MT	
	Hudson Pulp and Paper Corp.	Palatka, FL	
	Crown Zellerbach Corp.	Bogalusa, LA	
	S.W. Forest Ind.	Snowflake, AZ	

CONTINUED

TABLE 11. (continued)

Source type	Company	Location	Percentage of mills treating effluent on-site
Miscellaneous integrated (con't.)	International Paper Co.	Panama City, FL	
	International Paper Co.	Georgetown, SC	
	Fibreboard Corp.	Antioch, CA	
	Brown Co.	Berlin, NH	
	Weyerhaeuser Co.	Plymouth, NC	
	Gilman Paper	St. Mary's, GA	
	Georgia Pacific Corp.	Crossett, AR	
	Westvaco	Wickliffe, KY	
	Scott Paper Co.	Mobile, AL	
	Container Corporation of America	Brewton, AL	
	Crown Zellerbach Corp.	Camas, WA	
	Georgia Pacific Corp.	Woodland, ME	
	Powater Carolina Corp.	Catawba, SC	
	Potlatch Corp.	Cloquet, MN	
	Weyerhaeuser Co.	Longview, WA	
	International Paper Co.	Pine Bluff, AR	
	International Paper Co.	Moss Point, MS	
	Boise Cascade Corp.	St. Helens, OR	
	Lincoln Pulp & Paper Co. Inc.	Lincoln, ME	
	Allied Paper Inc.	Jackson, AL	
	Champion International Corp.	Canton, NC	
	Westvaco	Covington, VA	
	International Paper Co.	Mobile, AL	
	Crown Zellerbach Corp.	St. Francisville, LA	
	Crown Zellerbach Corp.	Clatskanie, OR	
	Union Camp Corp.	Franklin, VA	
	Publishers Paper Co.	Newberg, OR	
	Georgia Pacific Corp.	Lyons Falls, NY	
	Georgia Pacific Corp.	Plattsburgh, NY	

CONTINUED

TABLE 11. (continued)

Source type	Company	Location	Percentage of mills treating effluent on-site
Miscellaneous integrated (con't.)	Standard Packaging Corp.	Sheldon Springs, VT	
	Crown Zellerbach Corp.	West Linn, OR	
	Kimberly Clark Corp.	Coosa Pines, AL	
	International Paper Co.	Corinth, NY	
	Tomahawk Power & Pulp Co.	Tomahawk, WI	
	National Fibrit Division	Springfield, TN	
	Keyes Fibre Co.	Shawmut, ME	
	Southland Paper Mills Inc.	Lufkin, TX	
	Bowater Southern Paper Corp.	Calhoun, TN	
	Midtec Paper Corp.	Kimberly, WI	
	Armstrong Cork Co.	Fulton, NY	
	Publishers Paper Co.	Oregon City, OR	
	Crown Zellerbach Corp.	Port Angeles, WA	
	Boise Cascade Corp.	Beaver Falls, NY	
	Great Northern Paper Co.	Millinocket, ME	
	Southland Paper Mills Inc.	Houston, TX	
	Diamond International Corp.	Red Bluff, CA	
	Appleton Papers Corp.	Combined Locks, WI	
	Esleeck Manufacturing Co.	Turners Falls, MA	
	Crane & Co. Inc/Bay State Mill	Dalton, MA	
	Crane & Co. Inc/Old Berkshire Mill	Dalton, MA	
	Crane & Co. Inc/Pioneer Mill	Dalton, MA	
	Byron Weston Co.	Dalton, MA	
	Crane & Co. Inc/Government Mill	Dalton, MA	
	Crane & Co. Inc/Wahconah Mill	Dalton, MA	
	Continental Fibre Co.	Bridgeport, PA	
	Rising Paper Co.	Housatonic, MA	

CONTINUED

TABLE 11. (continued)

Source type	Company	Location	Percentage of mills treating effluent on-site
Miscellaneous integrated (con't.)	Kimberly Clark Corp.	Neenah, WI	
	NVF Co.	Holyoke, MA	
	Fox River Paper Co.	Appleton, WI	
	Nekoosa Papers Inc.	Stevens Point, WI	
	Cottrell Paper Co.	Rock City Falls, NY	
	Hammermill Paper Co.	Green Island, NY	
	Spaulding Fibre Co.	Tonawanda, NY	
	Mainstique Pulp and Paper Co.	Manistique, MI	
	Productos Forestales Caribe Inc.	Acrfcibo, PR	
	C.H. Dexter Co.	Windsor Locks, CI	
	Alpha Cellulose Corp.	Lumberton, NC	
	Kimberly Clark Corp.	Lee, MA	
	Kimberly Clark Corp.	Spotswood, NJ	
	Cottrell Paper Co.	Fort Edward, NY	
	Knowlton Bros.	Chattanooga, TN	
	Valentine Pulp & Paper Co.	Lockport, LA	
	Cheney Pulp & Co.	Franklin, OH	
	Congoleum Corp.	Finksburg, MD	
	Armstrong Cork Co.	Macon, GA	
	Buckeye Cellulose Corp.	Memphis, TN	
	Hercules Inc.	Hopewell, VA	
	NITEC Paper Corp.	Niagara Falls, NY	
	N V F Company (Yorklyn)	Yorklyn, DE	
	Olin Corp. (Ecusta)	Pisgah Forest, NC	
Deink-fine papers	Bergstrom Paper Co.	Neenah, WI	60
	Bergstrom Paper Co.	West Carrollton, OH	
	Diamond International	Hyde Park, MA	
	Ward Paper Co.	Merrill, WI	
	Georgia Pacific Corp.	Kalamazoo, MI	

CONTINUED

TABLE 11. (continued)

Source type	Company	Location	Percentage of mills treating effluent on-site
Deink-tissue papers	Erving Paper Mills	Erving, MA	73
	Erving Paper Mills	Baldwinville, MA	
	Fort Howard Paper Co.	Green Bay, WI	
	American Can Co.	Ashland, WI	
	Putney Paper Co.	Putney, VT	
	Brown Cc.	Eau Claire, WI	
	Brown Co.	East Ladysmith, WI	
	Erving Paper Mills	Hinsdale, NH	
	Potlatch Corp.	Ransom, PA	
	Marcal Paper Mills Inc.	Elmwood Park, NJ	
	Ponderosa Paper Products	Flagstaff, AZ	
	Wisconsin Tissue Mills Inc.	Menasha, WI	
	Fort Howard Paper Co.	Muskogee, OK	
	Crown-Zellerback Corp. (Patrician)	South Glen Falls, NY	
	Robell Tissue Mills	Pryor, OK	
	Statler Tissue	Augusta, ME	
Miscellaneous secondary fibers	Mountain Paper Products Corp.	Bellows Falls, VT	41
	Georgia Pacific Corp.	Pryor, OK	
	Brown Co/Recycled Paperboard	Kalamazoo, MI	
	EHV-Weidmann Industries Inc.	St. Johnsbury, OK	
	Menominee Paper Co.	Menominee, MI	
	Boise Cascade Corp.	Brownville, NY	
	Flintkote Co.	Vernon, CA	
	Georgia Pacific Corp.	Gary, IN	
	Fitchburg Paper Co.	Fitchburg, MA	

CONTINUED

TABLE 11. (continued)

Source type	Company	Location	Percentage of mills treating effluent on-site
Miscellaneous secondary fibers (con't.)	Crown Zellerbach Corp.	Carthage, NY	
	Potlatch Corp.	Pomona, CA	
	B.J. Fibres Inc.	Santa Ana, CA	
	Boise Cascade Corp.	Vancouver, WA	
	Riverside Paper Corp.	Appleton, WI	
	Newton Falls Paper Mill Inc.	Newton Falls, NY	
	Miami Paper Corp.	W. Carrollton, OH	
	Spaulding Fiber Co.	North Rochester, NH	
	Crown Zellerbach Corp.	Fort Edward, NY	
	Ohio Pulp Mills Inc.	Cincinnati, OH	
	Ponderosa Corp.	Augusta, GA	
	Ponderosa Corp.	Memphis, TN	
	Ponderosa Corp.	Oshkosh, WI	

Note: This list is subject to change as market conditions change, facility ownership changes or plants are closed down. The reader should verify the existence of particular facilities by consulting current listings or the plants themselves. The level of emissions from any given facility is a function of variables such as the amount of pulp bleached and control measures, and should be determined through direct contacts with plant personnel.

and miscellaneous secondary fibers at which a complex variety of pulping processes are employed and/or a variety of products are manufactured. Processes in which chlorine compounds are used as bleaching agents may be employed at these mills. Once the use of these processes is identified, chloroform emissions may be estimated by determining the quantity of each type of pulp and paper product for which a bleaching process is used and multiplying this production figure by the appropriate emission factor from Table 10.

Cooling Water

Process Description --

In steam electric power generators, cooling water is used to absorb heat liberated when the steam used in the power cycle is condensed to water. Chlorine is often added to cooling water to prevent fouling (formation of slime-forming organisms) of heat exchanger condenser tubes, which inhibits the heat exchange process.[38] Chloroform is produced by the aqueous reaction of chlorine with organic matter in the cooling water.[39]

Two types of cooling water systems are in general use: once-through systems and recirculating systems. In a once-through cooling water system, the cooling water is withdrawn from the water source, passed through the system (where it absorbs heat), and returned directly to the water source. Any chloroform produced is discharged to water. In a recirculating cooling water system, the cooling water is withdrawn from the water source and passed through the condensers several times before being discharged to the receiving water. Heat is removed from the cooling water after each pass through the condenser. Three major methods are used for removing heat from recirculating cooling water: cooling ponds or canals, mechanical draft evaporative cooling towers, and natural draft evaporative cooling towers. Chloroform evaporates to the air from these heat removal processes. The evaporation of water from a recirculating cooling water system in cooling ponds or cooling towers results in an increase in the dissolved solids concentration of the water remaining in the system. Scale formation is prevented in the system by bleeding off a portion of the cooling water (blowdown) and replacing it with fresh water which has a lower dissolved solids concentration.[38,39]

Emissions --

Once-through cooling systems -- Once-through cooling systems are used in approximately 60 percent of nonnuclear steam electric plants and in a total of 11 nuclear power plants in the United States.[40,41] The amount of chloroform formed in once-through cooling systems can be calculated based on the volume of cooling water used and the chloroform concentration resulting from chlorination. Chlorination has been shown to produce 0.41 kilograms (kg) of chloroform per 10^9 liters of cooling water.[39] Assuming that all of the chloroform in the cooling water evaporates, the chloroform emission factor is 0.41 kg/10^9 liters of cooling water.

Recirculating cooling systems -- Chloroform production rates resulting from chlorination in two recirculating cooling systems were measured at 2.4 and 3.6 mg chloroform per liter cooling water flow.[39] With approximately 75 percent evaporating at the cooling tower[39], the average chloroform emission factor for cooling towers is 2.3 kg/10^6 liters of cooling water. Assuming all of the remaining chloroform discharged in cooling tower blowdown evaporates from the receiving water, the chloroform emission factor is 0.75 kg/10^6 liters of cooling water.

Source Locations --

The SIC code for establishments engaged in the generation of electricity for sale is 4911.

Drinking Water

The occurrence and formation of chloroform in finished drinking water has been well documented. Chloroform may be present in the raw water as a result of industrial effluents containing the chemical. In addition, chloroform is formed from the reaction of chlorine with humic materials. Humic materials are acidic components derived from the decomposition of organic matter. Examples include humic acid, fulvic acid, and hymatomelanic acid. The amount of chloroform generated in drinking water is a function of both the amount of humic material present in the raw water and the chlorine feed. The chlorine feed is adjusted tc maintain a fairly constant 2.0 to 2.5 ppm chlorine residual and reflects changes in the total oxidizable dissolved organics and the rates of various oxidation reactions. Although there is a

higher organic content in raw water during the winter months, the more extensive oxidation that occurs during the summer months requires a higher chlorine feed. Thus, more chloroform is produced in drinking water during the summer than in the winter.[42,43]

Reported chloroform concentrations in raw water range from 0 to 1 microgram per liter (μg/l), with an average of less than 0.2 μg/l.[42] The average amount of chloroform generated in finished drinking water by chlorination is estimated at 41 μg/l. This estimate is based on data from National Organics Reconnaissance Survey (NORS) and the National Organics Monitoring Survey (NOMS),[42,43] in which drinking water samples were analyzed from a total of 137 cities.

Chloroform produced in drinking water is transferred to the air from leaks in the distribution system and during domestic, commercial, industrial, and agricultural use. The uses of drinking water tend to disperse and aerate the liquid, speeding evaporation. Assuming all of the chloroform in drinking water evaporates from the distribution system and during use, the chloroform emission factor is 0.041 kg/10^6 liters of water treated by chlorination.

Municipal Wastewater and Sludge

Chlorine and the chlorine-containing compounds, calcium and sodium hypochlorite, are used widely to disinfect municipal wastewater before it is discharged to receiving waters. Chlorination of municipal wastewater results in the formation of numerous chlorinated organic compounds, including chloroform. The concentration of the humic compounds that are the precursors to chloroform is much lower in municipal sewage than in natural surface water which is treated and used for drinking. Therefore, the amount of chloroform formed as the result of wastewater disinfection is small relative to the amount formed during the treatment of drinking water. Analyses of secondary effluent from 28 municipal wastewater treatment plants show that chlorination increases the average chloroform concentration in municipal wastewater by 9 micrograms per liter (μg/l), from 5 μg/l to 14 μg/l.[44]

Chloroform formed in chlorinated municipal wastewater is discharged to receiving water in the effluent. Evaporation of chloroform occurs at a rate dependent on factors such as turbulence, temperature, depth, and wind speed. Assuming all of the chloroform evaporates, the chloroform emission factor is 0.014 kg/10^6 liters of municipal wastewater discharged.

About 40 municipal wastewater treatment plants superchlorinate sludge.[45] Analyses of sludge at 2 plants have shown that superchlorination of sludge increases the average chloroform concentration in the liquid sludge from 8 parts per billion (ppb) to 1070 ppb. Samples of sludge cake from the drying beds at one of the plants indicated that roughly half of the chloroform evaporated during treatment at the plant. This corresponds to an emission factor of 580 kg/10^6 Mg of sludge treated by superchlorination.[46]

MISCELLANEOUS CHLOROFORM EMISSION SOURCES

Industrial Solvent Usage

As noted in a previous subsection, chloroform is widely used as a solvent in the manufacture of pharmaceuticals. Chloroform is also used as a solvent in the manufacture of other specialty and small-volume chemicals. For instance, the production of Hypalon® synthetic rubber is carried out in chloroform solution.[47,48] Hypalon® is a chemically resistant elastomer made by substituting chlorine and sulfonyl chloride groups into polyethylene.[49] Data are not available to estimate total chloroform solvent use in chemical manufacture or to identify all industries where chloroform is used.

Laboratory Usage

Chloroform is currently used in hospital, industrial, government, and university laboratories as a general reagent. Data were not available to estimate total chloroform use in laboratories.[50] However, laboratory use does appear to be widespread. One university reported that in a survey on potential carcinogens used in its 67 laboratories, chloroform was the most widely used, appearing in 53 laboratories.[51] Insufficient data are available to develop a chloroform emission factor for laboratory usage.

Treatment, Storage and Disposal Facilities

Considerable potential exists for volatile substances, including chloroform, to be emitted from waste treatment, storage and handling facilities. A California study shows that significant levels of chloroform may be contained in hazardous wastes which may be expected to volatilize within hours, days or months after disposal by landspreading, surface impoundment or covered landfill, respectively. Volatilization of chloroform and other substances was confirmed in this study by significant ambient air concentrations over one site.[52] Reference 53 provides general theoretical models for estimating volatile substance emissions from a number of generic kinds of waste handling operations, including surface impoundments, landfills, landfarming (land treatment) operations, wastewater treatment systems, and drum storage/handling processes. If such a facility is known to handle chloroform, the potential should be considered for some air emissions to occur.

Several studies show that chloroform may be emitted from wastewater treatment plants. In a bench scale test, the potential was demonstrated for chloroform volatilization from aeration basins.[54] In a test at a small municipal treatment plant (handling 40% industrial and 60% municipal sewage), chloroform emission rates from the aeration basins were measured at levels ranging from 703 to 5756 grams/hour.[46] Tests at a larger treatment plant (handling about 50% industrial sewage) showed that, on an average weekday, about 16 kilograms (kg) was present in the plant influent. Of this, about 56 percent volatilized during the activated sludge treatment process (primarily by air stripping), resulting in weekday chloroform emissions averaging about 9.1 kg/day. Weekend chloroform emissions dropped to 6.4 kg/day on Saturdays and 3.2 kg/day on Sundays.[55] Too little data are available to extrapolate these test results to other wastewater treatment plants.

SECTION 5
SOURCE TEST PROCEDURES

Chloroform emissions can be measured using EPA Reference Method 23, which was proposed in the Federal Register on June 11, 1980.[56] EPA Method 23 has been validated in the laboratory for chloroform,[57] although it has not been validated for chloroform in the field.[58]

In Method 23, a sample of the exhaust gas to be analyzed is drawn into a Tedlar® or aluminized Mylar® bag as shown in Figure 11. The bag is placed inside a rigid leak proof container and evacuated. The bag is then connected by a Teflon® sampling line to a sampling probe (stainless steel, Pyrex® glass, or Teflon®) at the center of the stack. Sample is drawn into the bag by pumping air out of the rigid container.

The sample is then analyzed by gas chromatography (GC) coupled with flame ionization detection (FID). Analysis should be conducted within 1 day of sample collection. The recommended GC column is 3.05 m by 3.2 mm stainless steel, filled with 20 percent SP-2100/0.1 percent Carbowax 1500 on 100/120 Supelcoport. This column normally provides an adequate resolution of halogenated organics. (Where resolution interferences are encountered, the GC operator should select the column best suited to the analysis.) The column temperature should be set at 100°C. Zero helium or nitrogen should be used as the carrier gas at a flow rate of approximately 20 ml/min.

The peak area corresponding to the retention time of chloroform is measured and compared to peak areas for a set of standard gas mixtures to determine the chloroform concentration. The range of the method is 0.1 to 200 ppm; however, the upper limit can be extended by extending the calibration range or diluting the sample.

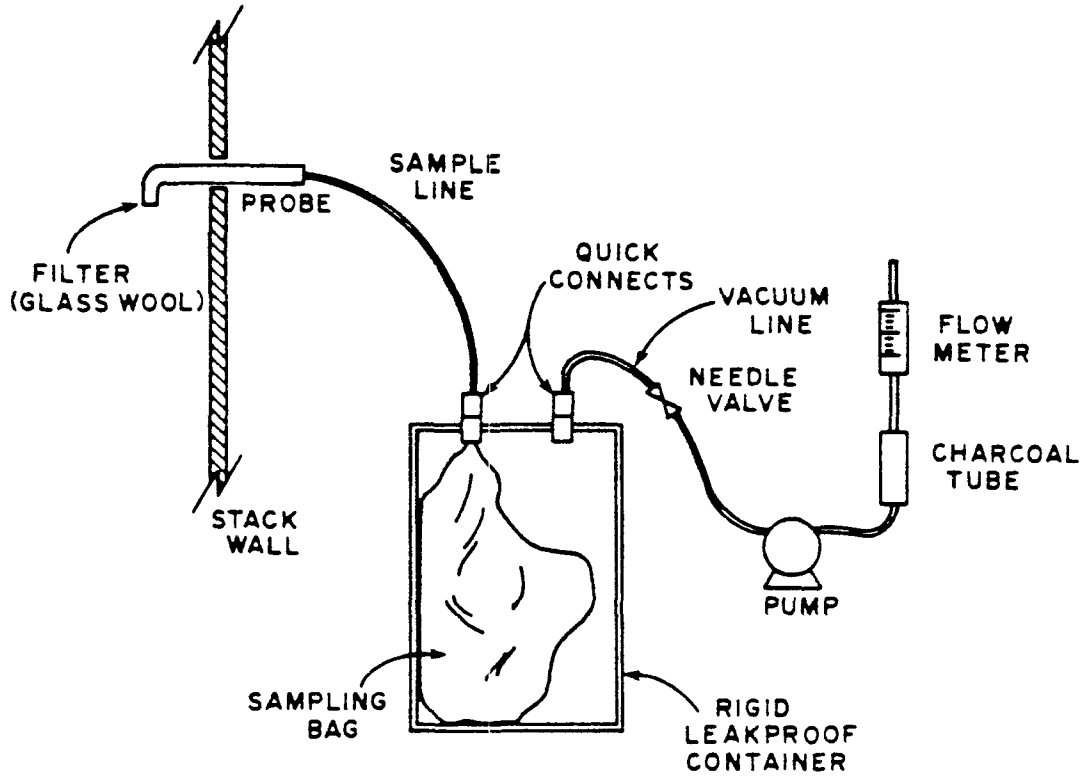

Figure 11. Method 23 sampling train.[56]

Method 23 does not apply when chloroform is contained in particulate matter. Also, in cases where chlorine and chlorine dioxide are present in the emission stream, such as in the paper industry, aluminized Mylar sample bags should not be used because of the reaction of these gases with the bag surface. When chlorine and chlorine dioxide are present, there is also the possibility that they may react with organics present in the sample to produce additional chloroform or compounds which may interfere with analysis of chloroform.[59] To minimize such side reactions, Method 23 requires that the sample be stored in a dark place between collection and analysis.

REFERENCES

1. Grayson, M., ed. Kirk-Othmer Encyclopedia of Chemical Technology. Third Edition, Volume 11. John Wiley and Sons, New York, NY, 1980.

2. National Research Council. Chloroform, Carbon Tetrachloride, and Other Halomethanes: An Environmental Assessment. National Academy of Sciences, Washington, DC, 1978.

3. Cuppitt, L. Fate of Hazardous Materials in the Environment. EPA-600/3-80-084, U.S. Environmental Protection Agency, Research Triangle Park, NC, August 1980.

4. GEOMET, Inc. Chloroform. In: Assessment of the Contribution of Environmental Carcinogens to Cancer Incidence in General Population Volume II. U.S. Environmental Protection Agency, Research Triangle Park, NC, December 5, 1977.

5. U.S. Environmental Protection Agency. Atmospheric Freons and Halogenated Compounds. EPA-600/3-76-108, Environmental Sciences Research Laboratory, Research Triangle Park, NC, November 1976.

6. Chemical Products Synopsis - Trichloroethylene. Mannsville Chemical Products, Courtland, NY, November 1979.

7. Chemical Briefs 3: Chloroform. Chemical Purchasing, June 1981. pp. 25-29.

8. Hobbs, F.D. and C.W. Stuewe. Report 6: Chloromethanes by Methanol Hydrochlorination and Methyl Chloride Chlorination Process. In: Organic Chemical Manufacturing Volume 8: Selected Processes. EPA-450/3-80-028c, U.S. Environmental Protection Agency, Research Triangle Park, NC, December 1980.

9. Hobbs, F.D. and C.W. Stuewe. Report 5: Chloromethanes by Methane Chlorination Process. In: Organic Chemical Manufacturing Volume 8: Selected Processes. EPA-450/3-80-028c, U.S. Environmental Protection Agency, Research Triangle Park, NC, December 1980.

10. Chemical Products Synopsis - Chloroform. Mannsville Chemical Products, Courtland, NY, February 1981.

11. Mason, G., Vulcan Materials Co., Wichita, KS. Personal communications with E. Anderson, GCA Corporation, October 4, 1983.

12. Arnold, S., Dow Chemical U.S.A., Midland, MI. Personal communications with E. Anderson, GCA Corporation, October 13, 1983.

13. *U.S. Environmental Protection Agency. Fugitive Emission Sources of* Organic Compounds--Additional Information on Emissions, Emission Reductions, and Costs. EPA-450/3-82-010, Research Triangle Park, NC, April 1982.

14. SRI International. 1983 Directory of Chemical Producers, United States of America. Menlo Park, CA, 1983.

15. Pitts, D.M. Report 3: Fluorocarbons (Abbreviated Report). In: Organic Chemical Manufacturing Volume 8: Selected Processes. EPA-450/3-80-028c, U.S. Environmental Protection Agency, Research Triangle Park, NC, December 1980.

16. Dow Chemical U.S.A. Industrial Process Profiles for Environmental Use, Chapter 16: The Fluorocarbon-Hydrogen Fluoride Industry. EPA-600/2-77-023p, U.S. Environmental Protection Agency, Cincinnati, OH, February 1977.

17. Turetsky, W.S., Allied Chemical, Morristown, NJ. Letter to D. Patrick, EPA, May 28, 1982.

18. Olson, D.S., E.I. duPont deNemours and Company, Wilmington, DE. Personal communications with E. Anderson, GCA Corporation, November 18, 1983.

19. U.S. Environmental Protection Agency. Control of Volatile Organic Emissions from Manufacture of Synthesized Pharmaceutical Products. EPA-450/2-78-029, Research Triangle Park, NC, December 1978.

20. Chemical Producers Data Base System - 1,2-Dichloroethane. U.S. Environmental Protection Agency, Cincinnati, Ohio, July 1981.

21. Hobbs, F.D. and J.A. Key. Report 1: Ethylene Dichloride. In: Organic Chemical Manufacturing Volume 8: Selected Processes. EPA-450/3-80-0 U.S. Environmental Protection Agency, Research Triangle Park, NC, December 19

22. Cox, G.V., Chemical Manufacturers Association, Washington, DC. Letter to T. Lahre, Office of Air Quality Planning and Standards, U.S. Environmental Protection Agency, August 18, 1983.

23. Mascone, D., EPA. Memo and Addendum to J. Farmer, EPA entitled "Thermal Incinerator Performance for NSPS," June 11, 1980.

24. Gasperecz, G., Louisiana Air Quality Division, Baton Rouge, LA. Personal communication with M.E. Anderson, GCA Corporation, August 5, 1983.

25. Gordon, C.V., Vulcan Chemicals. Memo to E.A. Stokes Vulcan Chemicals concerning 1980 emission inventory for Geismar, LA facility, May 26, 1982.

26. Gasperecz, G., Louisiana Air Quality Division, Baton Rouge, LA. Personal communication with M.E. Anderson, GCA Corporation, November 18, 1982.

27. Louisiana Air Control Commission. Emission Inventory Questionnaire for Allied Chemical Corp., North Works, Baton Rouge, LA, 1976.

28. Ethyl Corporation. Revised Compliance Schedule-Control of Volatile Organic Compound Emissions-Baton Rouge Plant, August 1982. p. 6.

29. Gasperecz, G., Louisiana Air Quality Division, Baton Rouge, LA. Personal communication with M.E. Anderson, GCA Corporation, December 21, 1982.

30. Schwartz, W.A., F.G. Higgins, J.A. Lee, R. Newirth and J.W. Pervier. Engineering and Cost Study of Air Pollution Control for the Petrochemical Industry Volume 3: Ethylene Dichloride Manufacture by Oxychlorination. EPA-450/3-73-006c, U.S. Environmental Protection Agency, Research Triangle Park, NC, November 1974.

31. Gasperecz, G., Louisiana Air Quality Division, Baton Rouge, LA. Personal communication with D.C. Misenheimer, GCA Corporation, September 30, 1983.

32. Shiver, J.K. Converting Chlorohydrocarbon Wastes by Chlorolysis. EPA-600/2-76-270, U.S. Environmental Protection Agency, Washington, DC, October 1976.

33. Standifer, R.L. and J.A. Key. Report 4: 1,1,1-Trichloroethane and Perchloroethylene, Trichloroethylene, and Vinylidene Chloride (Abbreviated Report). In: Organic Chemical Manufacturing Volume 8: Selected Processes. EPA-450/3-80-28c, U.S. Environmental Protection Agency, Research Triangle Park, NC, December 1980.

34. Worthington, J.B., Diamond Shamrock, Cleveland, OH. Letter to D.R. Goodwin, EPA, concerning emissions from perchloroethylene production, January 16, 1979.

35. U.S. Environmental Protection Agency. Development Document for Effluent Limitations Guidelines and Standards for the Pulp, Paper, and Paperboard and the Builders' Paper and Board Mills Point Source Categories. EPA-440/1-80-025b, Washington, DC, December 1980.

36. B. Dellinger, U.S. Environmental Protection Agency, Washington, DC. Personal communication with E. Anderson, GCA Corporation, September 9, 1982.

37. Dellinger, R., U.S. Environmental Protection Agency, Washington, DC. Memo with attachments to E. Anderson, GCA Corporation concerning pulp and paper mill locations, May 28, 1982.

38. U.S. Environmental Protection Agency. Development Document for Effluent Limitations Guidelines and Standards for the Steam Electric Point Source Category. EPA-440/1-80-029b, Office of Water Regulations and Standards, Washington, DC, September 1980. p. 66.

39. Jolley, R.L., W.R. Brungs, and R.B. Cumming. Water Chlorination: Environmental Impacts and Health Effects. Volume 3. Ann Arbor Science Publishers, Inc, Ann Arbor, MI, 1980. p. 701.

40. G. Ogle, TRW. Personal communication with S. Duletsky, GCA Corporation, November 17, 1982.

41. B. Samworth, Nuclear Regulatory Commission, Washington, DC. Personal communication with S. Duletsky, GCA Corporation, November 29, 1982.

42. Symons, James M., Thomas A. Bellar, J. Keith Carswell, et al. National Organics Reconnaissance Survey for Halogenated Organics. Journal of the American Water Works Association, November 1975. pp. 634-651.

43. U.S. Environmental Protection Agency. National Organic Monitoring Survey. Technical Support Division, Office of Water Supply, Washington, DC (no date).

44. U.S. Environmental Protection Agency. Fate of Priority Pollutants in Publicly Owned Treatment Works. EPA-400/1-70-301, Office of Water Regulations and Standards, Washington, DC, October 1979.

45. U.S. Environmental Protection Agency. The 1982 Needs Survey - Conveyance, Treatment, and Control of Muricipal Wastewater, Combined Sewer Overflows, and Stormwater Runoff. EPA-430/19-83-002, Washington, DC, June 1983. p. 92.

46. Pellizzari, E.D. Project Summary - Volatile Organics in Aeration Gases at Municipal Treatment Plants. EPA-600/52-82-056, U.S. Environmental Protection Agency, Cincinnati, OH, August 1982.

47. Shreve R.N., and J.A. Brink, Jr. Chemical Process Industries, Fourth Edition. McGraw-Hill, Inc, New York, NY, 1977. pp. 635-644.

48. Permit data from E.I. duPont to the Texas Air Control Board, Austin, TX.

49. The Merck Index, An Encyclopedia of Chemicals and Drugs, Ninth Edition. Merck and Co., Rahway, NJ. 1976. p. 647.

50. Richards, J., J.T. Baker Chemical Company, Phillipsburg, NJ. Personal communication with H. Rollins, GCA Corporation, November 8, 1982.

51. University of North Carolina at Chapel Hill. Survey of the Use of Chemical Carcinogens in University Laboratories. Chapel Hill, NC (no date).

52. Scheible, M., G. Shiroma, G. O'Brien, J. Lam, T. Krakower, and W. Gin. An Assessment of the Volatile and Toxic Organic Emissions from Hazardous Waste Disposal in California. Air Resources Board, State of California, February 1982.

53. GCA Corporation. Evaluation and Selection of Models for Estimating Air Emissions from Hazardous Waste Treatment, Storage and Disposal Facilities. Revised Draft Final Report. Prepared for the U.S. Environmental Protection Agency Under Contract Number 68-02-3168, Assignment No. 77. Bedford, MA, May 1983.

54. Petrasek, A.C., B.A. Austern and T.W. Neilheisel. Removal and Partitioning of Volatile Organic Priority Pollutants in Wastewater Treatment. Presented at the Ninth U.S.-Japan Conference on Sewage Treatment Technology. Tokyo, Japan. September 13-19, 1983.

55. U.S. Environmental Protection Agency. Fate of Priority Pollutants in Public Owned Treatment Works. EPA-440/1-82-302, Washington, DC, July 1982.

56. Method 23: Determination of Halogenated Organics from Stationary Sources. Federal Register 45(114): 39776-39777, 1980.

57. Knoll, J.E., M.A. Smith, and M.R. Midgett. Evaluation of Emission Test Methods for Halogenated Hydrocarbons: Volume 1, CCl_4, $C_2H_4Cl_2$, C_2Cl_4, and C_2HCl_3. EPA-600/4-79-025, U.S. Environmental Protection Agency, Research Triangle Park, NC, 1979.

58. Knoll, J., U.S. Environmental Protection Agency. Personal communication with W. Battye, GCA Corporation, September 8, 1982.

59. Elia, V.J., National Council of the Paper Industry for Air and Stream Improvement, Inc., Corvallis, OR. Letter to T. Lahre, EPA, May 4, 1983.

APPENDIX

DERIVATION OF EMISSION FACTORS FOR CHLOROFORM PRODUCTION

This appendix presents the derivations of chloroform emission factors for chloroform production processes that are presented in Tables 2 and 3. Emission factors for the methanol hydrochlorination/methyl chloride chlorination process were developed based on a hypothetical plant with a total chloromethane production capacity of 90,000 megagrams (Mg) and a product mix of 25 percent methyl chloride, 48 percent methylene chloride, 25 percent chloroform, and 2 percent byproduct carbon tetrachloride.[1] Emission factors for the methane chlorination process have been developed based on a hypothetical plant with a total chloromethane production capacity of 200,000 Mg, and a product mix of 20 percent methyl chloride, 45 percent methylene chloride, 25 percent chloroform, and 10 percent carbon tetrachloride.[2]

The following sections describe the derivations of chloroform emission factors for process vent emissions; in-process and product storage tank emissions; secondary emissions from liquid, solid, and aqueous waste streams; handling emissions from loading product chloroform; and fugitive emissions from leaks in process valves, pumps, compressors, and pressure relief valves.

PROCESS EMISSIONS

Methanol Hydrochlorination/Methyl Chloride Chlorination

Chloroform process emissions originate from the purging of inert gases in the condenser following the chloroform distillation column (Vent A in Figure 2). The uncontrolled emission factor for this source was calculated from an emission factor of 0.0056 kg chloroform per Mg of total chloromethane production[1] and a hypothetical plant chloroform production capacity of 25 percent of total chloromethane production:

$$\text{Emission factor} = \frac{0.0056 \text{ kg } CHCl_3}{\text{Mg total prod.}} \times \frac{\text{total prod.}}{0.25\ CHCl_3 \text{ prod.}}$$

$$= 0.022 \text{ kg/Mg}$$

Methane Chlorination

Chloroform process emissions result from the venting of the inert gases from the recycle methane stream (Vent A, Figure 3) and from the emergency venting of the distillation area inert gases (Vent C, Figure 3).

Recycled Methane Inert Gas Purge Vent--

The uncontrolled emission factor for the recycled methane inert gas purge vent was calculated from a chloroform emission factor of 0.0033 kg per Mg total chloromethane production capacity[2] and the hypothetical plant's chloroform production of 25 percent of total chloromethane production.

$$\text{Emission factor} = \frac{0.0033 \text{ kg } CHCl_3}{\text{Mg total prod.}} \times \frac{\text{total prod.}}{0.25\ CHCl_3 \text{ prod.}}$$

$$= 0.013 \text{ kg/Mg}$$

Distillation Area Emergency Inert Gas Vent--

The uncontrolled emission factor for the distillation area emergency inert gas vent was derived from an emission factor for volatile organic compounds (VOC) of 0.20 kg/Mg total chloromethane production capacity[2] and composition data showing chloroform to be 4.0 percent of VOC.[3] No information was available on the assumptions upon which the derivation of this VOC emission factor were based. The calculation of chloroform emissions per unit chloroform produced was made using a chloroform production rate of 25 percent of total chloromethanes production:

$$\text{Emission factor} = \frac{0.20 \text{ kg VOC}}{\text{Mg total prod.}} \times \frac{0.040\ CHCl_3}{\text{VOC}} \times \frac{\text{total prod.}}{0.25\ CHCl_3\ \text{p}}$$

$$= 0.032 \text{ kg/Mg}$$

STORAGE EMISSION FACTORS

In calculating storage emission factors, all storage tanks were assumed to be fixed roof tanks.[1,2] Uncontrolled chloroform emission factors for in-process and product storage for the methanol hydrochlorination

process (Vents B, C, D, and E, Figure 2) and the methane chlorination process (Vents B, D, and E, Figure 3) were calculated using emission equations for breathing and working losses from reference 4:

$$L_T = L_B + L_W$$

$$L_B \doteq 1.02 \times 10^{-5} M_v \left(\frac{P}{14.7-P}\right)^{0.68} D^{1.73} H^{0.51} T^{0.5} F_p C K_c$$

$$L_W = 1.09 \times 10^{-8} M_v PVNK_n K_c$$

where,

L_T = total loss (Mg/yr)

L_B = breathing loss (Mg/yr)

L_W = working loss (Mg/yr)

M_v = molecular weight of product vapor (lb/lb mole)

P = true vapor pressure of product (psia)

D = tank diameter (ft)

H = average vapor space height (ft): use tank specific values or an assumed value of one-half the tank height

T = average diurnal temperature change in °F

F_p = paint factor (dimensionless); assume a value of 1 for a white tank in good condition

C = tank diameter factor (dimensionless):

for diameter $\geq$ 30 feet, C = 1

for diameter < 30 feet,

$$C = 0.0771\ D - 0.0013(D^2) - 0.1334$$

K_c = product factor (dimensionless) = 1.0 for VOL

V = tank capacity (gal)

N = number of turnovers per year (dimensionless)

K_n = turnover factor (dimensionless):

for turnovers > 36, $K_n = \frac{180 + N}{6N}$

for turnovers $\leq$ 36, $K_n = 1$

For the methanol hydrochlorination/methyl chloride chlorination and methane chlorination processes, hypothetical plant storage tank conditions from references 1 and 2, respectively, were used for the calculations. The tank conditions given by these references include tank volume, number of turnovers per year, bulk liquid temperature, and an assumed

diurnal temperature variation of 20°C. The diameters (D), in feet, of the tanks were calculated from given tank volumes (V), in gallons, with heights (h), in feet, assumed at 8 foot intervals,[5] from:

$$D = 2\sqrt{\frac{V/7.481}{\pi \times h}}$$

For tanks containing mixtures, the vapor pressure of the mixture in the tank, molecular weight of vapor, and weight percent of chloroform in the vapor were calculated. The calculations of emission factors for all production processes are summarized in Table A-1. Sample calculations are presented in their entirety for the methanol hydrochlorination/methyl chloride chlorination process. For the other process, storage tank parameters and vapor composition data used in the calculations of the emission factors listed in Table A-1 are presented in tables.

Methanol Hydrochlorination/Methyl Chloride Chlorination

Emission factors for the crude product tank, the surge tank, and the chloroform tank were calculated using the tank parameters listed in Table A-2.

Composition -- The composition of the mixture in the crude product tank is based on the hypothetical plant mixture. The mole fractions of the liquid components were derived from these weight fractions and molecular weights. The mole fractions of the components in liquid were then multiplied by the vapor pressures of each component to determine component partial pressures, the sum of which is the total vapor pressure, P. Mole fractions of the components in the vapor phase were calculated as the ratio of component partial pressures to total vapor pressure. The molecular weight of the vapor mixture (M_v) was calculated as the sum of the products of the component partial pressures and their molecular weights, ignoring the molecular weight of the air. The weight percents of components in vapor were calculated from the ratios of the product of the mole fraction in vapor and molecular weight to the molecular weight of the vapor mixture. These calculations are summarized in Table A-3.

Tank emissions -- With the parameters listed in Table A-2, total tank losses were calculated as shown on page A-8.

TABLE A-1. SUMMARY OF CALCULATIONS OF CHLOROFORM STORAGE EMISSION FACTORS

PROCESS Tank	Breathing Loss, L_B (Mg/yr)	Working Loss, L_W (Mg/yr)	Total Loss, L_T (Mg/yr)	Percent Chloroform In Vapor	Number of Tanks	Chloroform Production (Mg/yr)	Emission Factor (kg/Mg)
METHYL CHLORIDE CHLORINATION							
Crude	3.60	2.96	6.56	21	1	22,500	0.061
Surge	1.20	1.08	2.28	96	1	22,500	0.097
Day (2)	0.43	5.80	6.23	100	2	22,500	0.55
Product	3.62	16.0	19.6	100	1	22,500	0.87
METHANE CHLORINATION							
Crude	10.5	11.6	22.1	20	1	50,000	0.088
Day (2)	1.23	12.6	13.8	100	2	50,000	0.55
Product	6.34	35.3	41.6	100	1	50,000	0.83

TABLE A-2. STORAGE TANK PARAMETERS FOR METHANOL HYDROCHLORINATION/METHYL CHLORIDE CHLORINATION PROCESS

Tanks	Crude	Surge	Day	Product
Number of tanks	1	1	2	1
Volume (V), gal	50,000	20,000	10,000	200,000
Height (h), ft	24	16	16	40
Vapor space height (H), ft	12	8	8	20
Diameter (D), ft	19	15	10	29
Turnovers/yr (N)	6	6	199	20
Temperature, °F	95	104	104	68
Vapor pressure (P), psia	9.96	6.90	7.09	3.09
Diurnal temperature change (T), °F	22	22	22	22
Molecular weight of vapor (M_v), lb/lb mole	91.0	120	119	119
Turnover factor (K_n)	1	1	0.317	1
Tank diameter factor (C)	0.862	0.731	0.508	1

TABLE A-3. SUMMARY OF COMPOSITION CALCULATIONS FOR METHANOL HYDROCHLORINATION/METHYL CHLORIDE CHLORINATION - CRUDE PRODUCT TANK

LIQUID COMPOSITION:

Component	Weight percent in liquid, w_l	Molecular weight, MW	Moles in liquid, m_l (w_l/MW)	Mole fraction in liquid, x_l (m_l/M_l)
Methylene chloride	64	85	0.753	0.72
Chloroform	33	119	0.277	0.26
Carbon tetrachloride	3	154	0.019	0.018
			M_l= 1.049	

VAPOR COMPOSITION:

Component	Vapor pressure (psia), P^o	Partial pressure, P_p $(P^o x\ x_l)$	Mole fraction in vapor, x_v (P_p/P)	Weight in vapor, g_v $(x_v \times MW)$	Weight percent in vapor $([g_v/M_v] \times 100)$
Methylene chloride	11.6	8.35	0.84	71	78
Chloroform	5.96	1.55	0.16	19	21
Carbon tetrachloride	3.44	0.062	0.0062	0.96	1.1
		P= 9.962		M_v= 90.96	

$$L_B = (1.02 \times 10^{-5})(91.0)\left(\frac{9.96}{14.7-9.96}\right)^{0.68}(19)^{1.73}(12)^{0.51}(22)^{0.5}(1)(0.862)(1)$$

$$= (1.02 \times 10^{-5})(91.0)(1.66)(163)(3.55)(4.69)(0.862)$$

$$= 3.60 \text{ Mg/yr}$$

$$L_W = (1.09 \times 10^{-8})(91.0)(9.96)(50{,}000)(6)(1)(1)$$

$$= 2.96 \text{ Mg/yr}$$

$$L_T = L_B + L_W = 6.56 \text{ Mg/yr}$$

Emission factor -- The chloroform emission factor was calculated from total annual tank loss, fraction of the vapor mixture that is chloroform, and the hypothetical plant chloroform production rate of 22,500 Mg/yr:

$$\text{Emission factor} = \frac{(6.56 \text{ Mg/yr})(0.21)}{22{,}500 \text{ Mg/yr}}$$

$$= 0.061 \text{ kg/Mg}$$

Surge Tank --

Composition -- The calculations for the composition of the vapor of the surge tank are presented in Table A-4.

Tank Emissions --

$$L_B = (1.02 \times 10^{-5})(120)\left(\frac{6.90}{14.7-6.90}\right)^{0.68}(15)^{1.73}(8)^{0.51}(22)^{0.5}(1)(0.731)(1)$$

$$= (1.02 \times 10^{-5})(120)(0.92)(108)(2.89)(4.69)(0.731)$$

$$= 1.20 \text{ Mg/yr}$$

$$L_W = (1.09 \times 10^{-8})(120)(6.90)(20{,}000)(6)(1)(1)$$

$$= 1.08 \text{ Mg/yr}$$

$$L_T = L_B + L_W = 2.28 \text{ Mg/yr}$$

Emission Factor --

$$\text{Emission factor} = \frac{(2.28 \text{ Mg/yr})(0.96)}{22{,}500 \text{ Mg/yr}}$$

$$= 0.097 \text{ kg/Mg}$$

TABLE A-4. SUMMARY OF COMPOSITION CALCULATIONS FOR METHANOL HYDROCHLORINATION/METHYL CHLORIDE CHLORINATION - SURGE TANK

LIQUID COMPOSITION:

Component	Weight percent in liquid, w_l	Molecular weight, MW	Moles in liquid, m_l (w_l/MW)	Mole fraction in liquid, x_l (m_l/M_l)
Chloroform	92.6	119	0.778	0.94
Carbon tetrachloride	7.4	154	$M_l = \frac{0.048}{0.826}$	0.058

VAPOR COMPOSITION:

Component	Vapor pressure (psia), P^o	Partial pressure, P_p $(P^o x\ x_l)$	Mole fraction in vapor, x_v (P_p/P)	Weight in vapor, g_v $(x_v \times MW)$	Weight percent in vapor $([g_v/M_v] \times 100)$
Chloroform	7.09	6.66	0.97	115	96
Carbon tetrachloride	4.08	$\frac{0.24}{6.90}$	0.035	$\frac{5.4}{120.4}$	4.5

Day Tanks --

Tank Emissions --

$$L_B = (1.02 \times 10^{-5})(119)\left(\frac{7.09}{14.7-7.09}\right)^{0.68}(10)^{1.73}(8)^{0.51}(22)^{0.5}(1)(0.508)(1)$$

$$= (1.02 \times 10^{-5})(119)(0.953)(53.7)(2.89)(4.69)(0.508)$$

$$= 0.43 \text{ Mg/yr}$$

$$L_W = (1.09 \times 10^{-8})(119)(7.09)(10{,}000)(199)(0.317)(1)$$

$$= 5.80 \text{ Mg/yr}$$

$$L_T = L_B + L_W = 6.23 \text{ Mg/yr}$$

Emission factor --

$$\text{Emission factor} = \frac{6.23 \frac{\text{Mg/yr}}{\text{tank}} \times 2 \text{ tanks}}{22{,}500 \text{ Mg/yr}}$$

$$= 0.55 \text{ kg/Mg}$$

Product Tank --

Tank Emissions --

$$L_B = (1.02 \times 10^{-5})(119)\left(\frac{3.09}{14.7-3.09}\right)^{0.68}(29)^{1.73}(20)^{0.51}(22)^{0.5}(1)(1)(1)$$

$$= (1.02 \times 10^{-5})(119)(0.407)(339)(4.61)(4.69)$$

$$= 3.62 \text{ Mg/yr}$$

$$L_W = (1.09 \times 10^{-8})(119)(3.09)(200{,}000)(20)(1)(1)$$

$$= 16.0 \text{ Mg/yr}$$

$$L_T = L_B + L_W = 19.6 \text{ Mg/yr}$$

Emission factor --

$$\text{Emission factor} = \frac{19.6 \text{ Mg/yr}}{22{,}500 \text{ Mg/yr}}$$

$$= 0.87 \text{ kg/Mg}$$

Methane Chlorination

Emission factors for the crude product tank, two chloroform day tanks, and the chloroform product tank were calculated using the tank parameters listed in Table A-5. The calculations of the composition of the vapor for the crude product tank are summarized in Table A-6.

TABLE A-5. STORAGE TANK PARAMETERS FOR METHANE CHLORINATION PROCESS

Tanks	Crude	Day	Product
Number of tanks	1	2	1
Volume (V), gal	200,000	30,000	400,000
Height (h), ft	40	24	48
Vapor space height (H), ft	20	12	24
Diameter (D), ft	29	15	38
Turnovers/yr (N)	6	147	22
Temperature, °F	95	95	68
Vapor pressure (P), psia	9.50	5.96	3.09
Diurnal temperature change (T), °F	22	22	22
Molecular weight of vapor (M_v), lb/lb mole	93	119	119
Turnover factor (K_n)	1	0.371	1
Tank diameter factor (C)	1	0.731	1

TABLE A-6. SUMMARY OF COMPOSITION CALCULATIONS FOR METHANE CHLORINATION - CRUDE PRODUCT TANK

LIQUID COMPOSITION:

Component	Weight percent in liquid, w_l	Molecular weight, MW	Moles in liquid, m_l (w_l/MW)	Mole fraction in liquid, x_l (m_l/M_l)
Methylene chloride	56	85	0.66	0.66
Chloroform	31	119	0.26	0.26
Carbon tetrachloride	13	154	0.084	0.084
			$M_l = \frac{0.084}{1.00}$	

VAPOR COMPOSITION:

Component	Vapor pressure (psia), P^o	Partial pressure, P_p $(P^o x\ x_l)$	Mole fraction in vapor, x_v (P_p/P)	Weight in vapor, g_v $(x_v \times MW)$	Weight percent in vapor $([g_v/M_v] \times 100)$
Methylene chloride	11.6	7.66	0.81	69	0.74
Chloroform	5.96	1.55	0.16	19	0.20
Carbon tetrachloride	3.44	0.29	0.031	4.8	0.052
		$P = \frac{0.29}{9.50}$		$M_v = \frac{4.8}{92.8}$	

SECONDARY EMISSIONS

Methanol Hydrochlorination/Methyl Chloride Chlorination

Potential sources of secondary emissions include the aqueous discharge from the methanol hydrochlorination process stripper and the sulfuric acid waste from the methyl chloride drying tower; however, chloroform has not been found to be a component of the organic compounds in these waste streams.[1]

Methane Chlorination

Secondary emissions of chloroform can result from the handling and disposal of process waste liquid. These liquid streams are indicated on the process flow diagram (Source F, Figure 3) and include the waste caustic from the scrubbers on methyl chloride and recycle methane streams and the crude chloromethanes neutralizer and the salt solution discharge from the crude chloromethanes dryers. The uncontrolled emission factor for these secondary chloroform emissions was calculated using a chloroform content of 300 parts per million reported for total wastewater discharges averaging 68 liters per minute,[3] the conservative assumption that 100 percent of the chloroform will be volatilized during on-site wastewater treatment, and the hypothetical plant chloroform production of 50,000 Mg/yr:

$$\text{Emissions} = \frac{68\ \ell\ \text{water}}{\text{min}} \times \frac{1\ \text{kg}}{\ell\ \text{water}} \times \frac{300\ \text{kg}\ CHCl_3}{10^6\ \text{kg water}} \times \frac{5.26 \times 10^5\ \text{min}}{\text{yr}}$$

$$= 10{,}700\ \text{kg/yr}$$

$$\text{Emission factor} = \frac{10{,}700\ \text{kg/yr}}{50{,}000\ \text{Mg/yr}}$$

$$= 0.21\ \text{kg/Mg}$$

HANDLING EMISSIONS

The following equation from reference 6 was used to develop an uncontrolled emission factor for loading of product chloroform. Submerged loading of chloroform with a bulk liquid temperature of 20°C into clean tank cars, trucks, and barges was assumed.

$$L_L = 12.46 \frac{SPM}{T}$$

L_L = Loading loss, lb/10^3 gal of liquid loaded

M = Molecular weight of vapors, lb/lb-mole = 119

P = True vapor pressure of liquid loading, psia = 3.09

T = Bulk temperature of liquid loaded (°R) = 528 (20°C)

S = A saturation factor = 0.5 for submerged file of clean tank trucks, tank cars, and barges.

$$L_L = 12.46 \frac{(0.5)(3.09)(119)}{528} = 4.34 \frac{lb}{10^3 \text{ gal}}$$

Loading loss in lb/10^3 gal was converted to an emission factor in terms of kg/Mg (equivalent to lb/10^3 lb) by dividing by the density of chloroform (1.49 g/ml = 12.4 lb/gal):

$$\text{Emission factor} = \frac{4.34 \text{ lb}/10^3 \text{ gal}}{12.4 \text{ lb/gal}}$$

$$= 0.35 \text{ kg/Mg}$$

PROCESS FUGITIVE EMISSIONS

Fugitive emissions of chloroform and other volatile organics result from leaks in process valves, pumps, compressors, and pressure relief valves. For both the methanol hydrochlorination and methane chlorination processes, the chloroform emission rates from these sources were based on process flow diagrams, process operation data, and fugitive source inventories for hypothetical plants[1,2] and EPA emission factors for process fugitive sources.[7]

The first step in estimating fugitive emissions of chloroform was to list the process streams in the hypothetical plant. Their phases were then identified from the process flow diagram and their compositions estimated. For a reactor product stream, the composition was estimated based on reaction completion data for the reactor and on the plant product slate. For a stream from a distillation column or other separator, the composition was estimated based on the composition of the input stream to the unit, the unit description, and the general description of stream of interest (ie. overheads, bottoms, or sidedraw).

After the process streams were characterized, the number of valves per stream were estimated by dividing the total number of valves at the plant equally among the process streams. Similarly, pumps were apportioned equally among liquid process streams, and relief valves were apportioned equally among all reactors, columns, and other separators. The locations of any compressors were determined from the process flow diagram.

Emissions were then calculated for pumps, compressors, valves in liquid and gas line service, and relief valves. Emissions from flanges and drains are minor in comparison with these sources and were, therefore neglected. Fugitive emissions from a particular source were assumed to have the same composition as the process fluid to which the source is exposed. For valves in liquid service, for instance, chloroform emissions were determined by taking the product of: (1) the total number of liquid valves in chloroform service; (2) the average chloroform content of the streams passing through these valves; and (3) the average fugitive emission rate per valve per unit time as measured by EPA. Emissions from valves in gas service, pumps, and compressors were calculated in the same manner. For relief valves, fugitive emissions were assumed to have the composition of the overhead stream from the reactor or column served by the relief valve. Emissions from the various fugitive source types were summed to obtain total process fugitive emissions of chloroform.

Because emissions from process fugitive sources do not depend on their size, but only on their number, total process fugitive emissions are not dependent on plant capacity. Thus, the overall emissions are expressed in terms of kilograms per hour of operation.

Methanol Hydrochlorination/Methyl Chloride Chlorination

Hypothetical plant fugitive source inventory[1]--

725 process valves
15 pumps (not including spares)
2 compressors
25 safety relief valves

Process line composition--

Of the total 31 process lines, eight are in chloroform service, from the methyl chloride chlorination reactor to chloroform storage (see Figure A-1).[1] Compositions were estimated as follows:

Stream number	Phase	Composition			
		CH_2Cl_2	$CHCl_3$	CCl_4	Other
17	Gas	29	14	1.4	55
18	Liquid	29	14	1.4	55
20	Liquid	64	33	3	
24	Liquid		91	9	
25	Liquid		91	9	
26	Gas		100		
27	Liquid		100		
28	Liquid		100		

Valves--

$$\frac{725 \text{ valves}}{31 \text{ lines}} \approx 23 \text{ valves per process line}$$

Assuming 23 valves in each of the above lines, and averaging the chloroform contents for gas and liquid lines, total plant valve emissions were estimated as follows:

	Component emission factor (kg/hr-valve)[7]	Valves $CHCl_3$ service	Avg composition (% $CHCl_3$)	Emissions (kg/hr)
Liquid valves	0.0071	138	71.5	0.70
Gas valves	0.0056	46	57.0	0.14
				0.84

Pumps--

$$\frac{15 \text{ pumps}}{15 \text{ liquid lines}} \approx 1 \text{ pump per liquid process line}$$

For one pump in each of the six liquid lines in chloroform service, an emission factor of 0.05 kg/hr/pump,[7] and average chloroform concentration of 71.5 percent, pump emissions from the hypothetical plant were estimated at:

$$1 \text{ pumps/line} \times 6 \text{ lines} \times 0.05 \text{ kg/hr} \times 0.715 = 0.21 \text{ kg/hr}$$

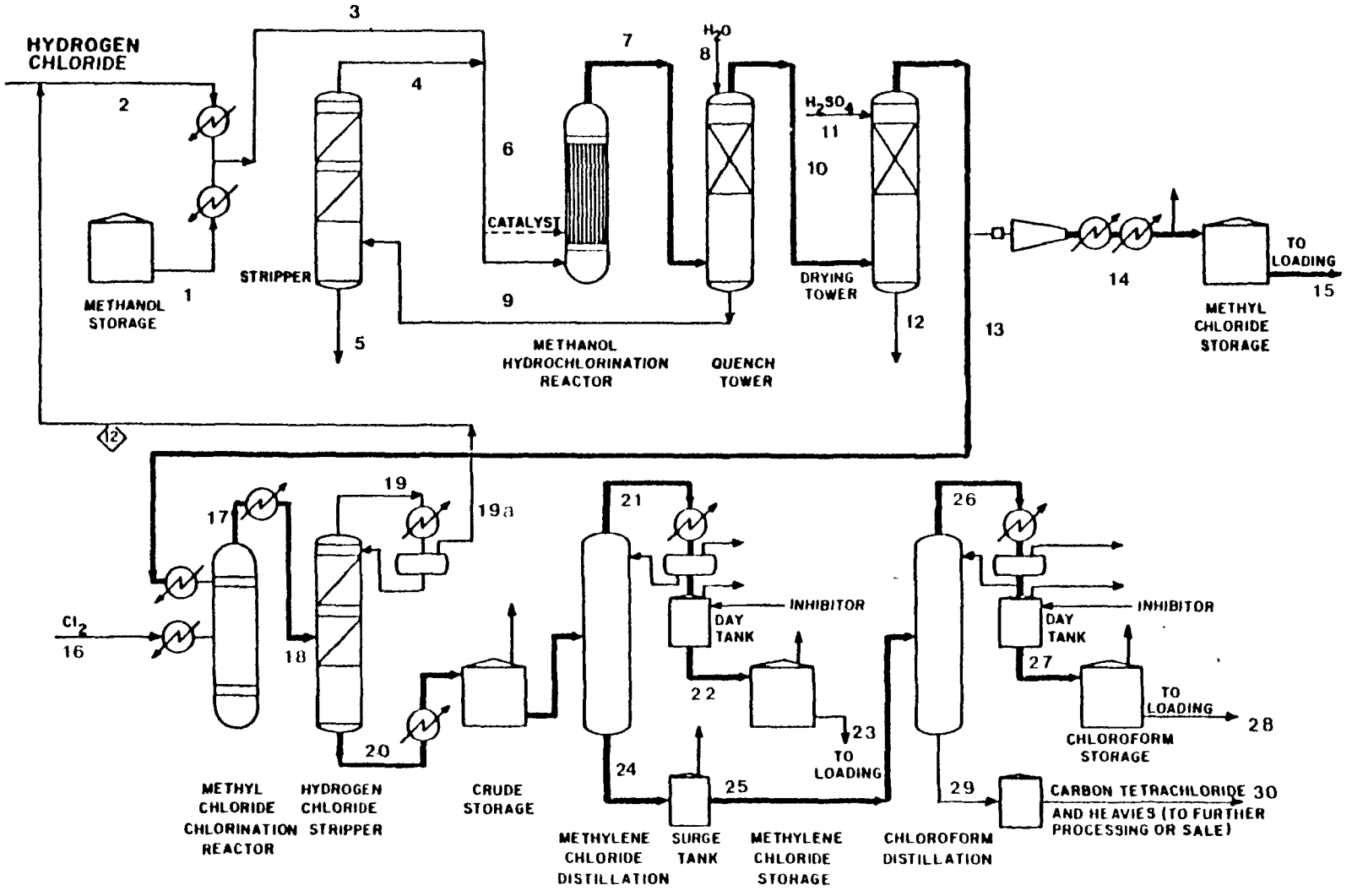

Figure A-1. Process flow diagram for hypothetical plant using methanol hydrochlorination/ methyl chloride chlorination process showing stream numbers used in fugitive emission calculations.

Compressors--

There are no compressors in chloroform service.

Relief valves--

$$\frac{25 \text{ relief valves}}{8 \text{ columns}} \approx 3 \text{ relief valves per reactor or column}$$

The methyl chloride reactor and chloroform column heads will contain chloroform at the concentrations estimated for streams 17 and 27, respectively. With an emission factor of 0.104 kg/hr/valve,[7] hypothetical plant emissions were estimated as follows:

	Number of relief valves	Emission factor (kg/hr)[7]	Composition (% $CHCl_3$)	Emissions (kg/hr)
CH_3Cl reactor	3	0.104	14	0.044
$CHCl_3$ column	3	0.104	100	0.312
				0.356

Total process fugitive emissions--

Total process fugitive emissions for methanol hydrochlorination/methyl chloride chlorination hypothetical plant:

Valves-liquid	0.70
- gas	0.14
Pumps	0.21
Compressors	-
Relief valves	0.36
Total	1.41 kg/hr

Overall efficiencies were calculated for three control options. The first, quarterly I/M for pumps and valves has an overall efficiency for chloroform emissions from methanol hydrochlorination/methyl chloride chlorination of about 49 percent. Monthly I/M for pumps and valves has an overall efficiency of about 67 percent; and the use of double mechanical seals, application of rupture disks to relief valves, and monthly I/M for other valves has an overall efficiency of about 77 percent.

Methane Chlorination

Hypothetical plant fugitive source inventory[2]--

1,930 process valves
40 pumps (not including spares)
1 compressor
70 safety relief valves

Process line composition--

Of the total 50 process lines, about 17 are in chloroform service, from the chlorination reactor to chloroform storage (see Figure A-2).[2] Compositions were estimated as follows:

Stream number	Phase	Composition					
		CH_2Cl_2	$CHCl_3$	CCl_4	CH_4	HCl	CH_3Cl
4	Gas	28	16	6	3	33	12
5,8	Liquid	56	31	13			
11	Liquid	45	25	10			20
10,14,16	Liquid	56	31	13			
37,38,39,40,41	Liquid	56	31	13			
44	Liquid		70	30			
46	Gas		100				
47,48,48a	Liquid		100				

Valves--

$$\frac{1930 \text{ valves}}{55 \text{ lines}} \approx 35 \text{ valves per process line}$$

Assuming 35 valves in each of the above lines and averaging the chloroform contents for gas and liquid lines, total plant valve emissions were estimated as follows:

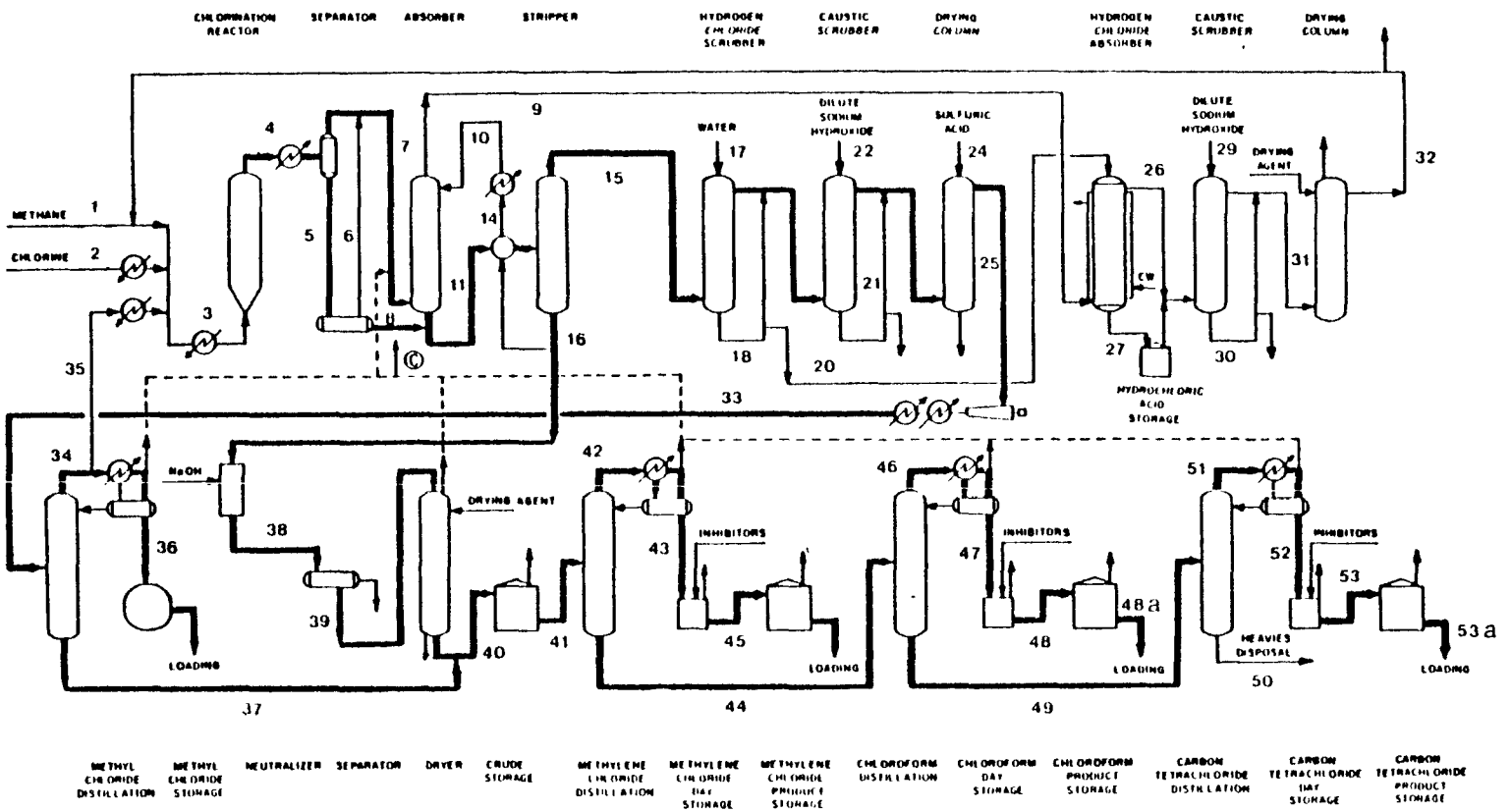

Figure A-2. Process flow diagram for hypothetical plant using methane chlorination process showing stream numbers used in fugitive emission calculations.

	Component emission factor (kg/hr-valve)[7]	Valves in $CHCl_3$ service	Avg. composition (% $CHCl_3$)	Emissions (kg/hr)
Liquid valves	0.0071	526	47	1.75
Gas valves	0.0056	70	58	0.23
				1.98

Pumps--

$$\frac{40 \text{ pumps}}{35 \text{ liquid lines}} \approx 1 \text{ pump per liquid process line}$$

Assuming an average of one pump for each of the 15 liquid process lines in chloroform service, an emission factor of 0.05 kg/hr-pump[7] and average chloroform composition of 47 percent, pump emissions from the model plant were estimated as follows:

$$1 \text{ pumps/line} \times 15 \text{ lines} \times 0.05 \text{ kg/hr} \times 0.47 = 0.35 \text{ kg/hr}$$

Compressors--

There are no compressors in chloroform service.

Relief valves--

$$\frac{70 \text{ relief valves}}{14 \text{ columns}} \approx 5 \text{ relief valves per column or reactor}$$

A number of column and reactor overhead streams contain chloroform, as shown below. With a relief valve emission factor of 0.104 kg/hr,[7] hypothetical plant emissions were estimated as follows:

Stream	Number of relief valves	Emission factor (kg/hr)	Composition (% $CH\ Cl_3$)	Emissions (kg/hr)
4	5	0.104	16	0.08
39	5	0.104	31	0.16
46	5	0.104	100	0.52
				0.77

Total process fugitive emission rate--

Total process fugitive emissions for methane chlorination hypothetical plant:

Valves - liquid	1.75
- gas	0.23
Pumps	0.35
Relief valves	0.76
Total	3.09 kg/hr

Controls which can be used to reduce fugitive emissions include the use of rupture disks on relief valves, the use of pumps with double mechanical seals, and inspection and maintenance of pumps and valves. The efficiencies of these controls for individual components are described in the previous section on fugitive emissions from methanol hydrochlorination/methyl chloride chlorination.

Quarterly I/M for pumps and valves has an overall efficiency for chloroform emissions from methane chlorination of about 49 percent. Monthly I/M for pumps and valves has an overall efficiency of about 64 percent; and the use of double mechanical seals, application of rupture disks to relief valves, and monthly I/M for other valves has an overall efficiency of about 76 percent.

REFERENCES FOR APPENDIX A

1. Hobbs, F.D. and C.W. Stuewe. Report 6: Chloromethanes by Methanol Hydrochlorination and Methyl Chloride Chlorination Process. In: Organic Chemical Manufacturing Volume 8: Selected Processes. EPA-450/3-80-028c, U.S. Environmental Protection Agency, Research Triangle Park, NC, December 1980.

2. Hobbs, F.D. and C.W. Stuewe. Report 5: Chloromethanes by Methane Chlorination Process. In: Organic Chemical Manufacturing Volume 8: Selected Processes. EPA-450/3-80-028c, U.S. Environmental Protection Agency, Research Triangle Park, NC, December 1980.

3. Beale, J., Dow Chemical U.S.A., Midland, MI. Letter dated April 28, 1978, to L. Evans, EPA concerning Dow facility at Freeport, TX.

4. U.S. Environmental Protection Agency. Storage of Organic Liquids. In: Air Pollution Emission Factors, Third Edition - Supplement 12. AP-42, Research Triangle Park, NC, April 1981.

5. U.S. Environmental Protection Agency. Transportation and Marketing of Petroleum Liquids. In: Compilation of Air Pollution Emission Factors, Third Edition - Supplement 9. AP-42, Research Triangle Park, NC, July 1979.

6. Graf-Webster, E., Metrek Division, MITRE Corp, McLean, VA. Memo to T. Wright, Metrek Division, MITRE Corp describing the Chemical Tank Emission Data Base, May 1978.

7. U.S. Environmental Protection Agency. Fugitive Emission Sources of Organic Compounds--Additional Information on Emissions, Emission Reductions, and Costs. EPA-450/3-82-010, Research Triangle Park, NC, April 1982.

TECHNICAL REPORT DATA
(Please read Instructions on the reverse before completing)

1. REPORT NO EPA-450/4-84-007c	2.	3. RECIPIENT'S ACCESSION NO.
4. TITLE AND SUBTITLE LOCATING AND ESTIMATING AIR EMISSIONS FROM SOURCES OF CHLOROFORM		5. REPORT DATE March 1984 6. PERFORMING ORGANIZATION CODE
7. AUTHOR(S) GCA Corporation 213 Burlington Road, Bedford, MA 01730		8. PERFORMING ORGANIZATION REPORT NO
9. PERFORMING ORGANIZATION NAME AND ADDRESS		10. PROGRAM ELEMENT NO. 11. CONTRACT/GRANT NO.
12. SPONSORING AGENCY NAME AND ADDRESS Office Of Air Quality Planning And Standards U. S. Environmental Protection Agency MD 14 Research Triangle, NC 27711		13. TYPE OF REPORT AND PERIOD COVERED 14. SPONSORING AGENCY CODE

15. SUPPLEMENTARY NOTES

EPA Project Officer: Thomas F. Lahre

16. ABSTRACT

To assist groups interested in inventorying air emissions of various potentially toxic substances, EPA is preparing a series of documents such as this to compile available information on sources and emissions of these substances. This document deals specifically with chloroform. Its intended audience includes Federal, State and local air pollution personnel and others interested in locating potential emitters of chloroform and in making gross estimates of air emissions therefrom.

This document presents information on 1) the types of sources that may emit chloroform, 2) process variations and release points that may be expected within these sources, and 3) available emissions information indicating the potential for chloroform release into the air from each operation.

17. KEY WORDS AND DOCUMENT ANALYSIS

a. DESCRIPTORS	b. IDENTIFIERS/OPEN ENDED TERMS	c. COSATI Field/Group
Chloroform Air Emission Sources Locating Air Emission Sources Toxic Substances		

18. DISTRIBUTION STATEMENT	19. SECURITY CLASS (This Report)	21. NO. OF PAGES 100
	20. SECURITY CLASS (This page)	22. PRICE

EPA Form 2220-1 (Rev. 4-77) PREVIOUS EDITION IS OBSOLETE