United States
Environmental Protection
Agency

Office of Air Quality
Planning and Standards
Research Triangle Park NC 27711

EPA-450/4-90-008a
May 1990

Air

EPA

IMPROVE

PROGRESS REPORT

APPENDIX A

EPA-450/4-90-008a

IMPROVE
PROGRESS REPORT
APPENDIX A

By

Marc Pitchford
Environmental Monitoring Systems Laboratory
U. S. Environmental Protection Agency
Las Vegas, NV 93478

And

David Joseph
Air Quality Office
National Park Service
Denver, CO 80228

U.S. Environmental Protection Agency
Region 5, Library (5PL-16)
230 S. Dearborn Street, Room 1670
Chicago, IL 60604

Office Of Air Quality Planning And Standards
Office Of Air And Radiation
U. S. Environmental Protection Agency
Research Triangle Park, NC 27711

May 1990

This report has been reviewed by the Office Of Air Quality Planning And Standards, U. S. Environmental Protection Agency, and has been approved for publication. Any mention of trade names or commercial products is not intended to constitute endorsement or recommendation for use.

EPA-450/4-90-008a

Standard Operating Procedures for

IMPROVE

Particulate Monitoring Network

Analytical Services Division
Crocker Nuclear Laboratory
University of California, Davis
Davis, CA 95616

July 1989

Table of Contents

I. INTRODUCTION 4

A. Role of Procedures in the IMPROVE system 4
B. The IMPROVE Sampler 6
C. Responsibilities for Maintaining the Procedures 7
D. Overview of the Standard Operating Procedure Document 8

II. SAMPLE HANDLING BEFORE SHIPMENT TO THE SITE 10

A. Preparing the Clean Filters 11

1. Module A fine Teflon filters 11
2. Module B fine nylon filters 14
3. Module C fine quartz filters 14
4. Module D PM10 Teflon filters 14

B. Loading the Cassettes 14
C. Verifying the Loading Procedures and Leak-testing the Cassettes . . 18
D. Prepare the Blue Box for Shipment 19

III. SAMPLE CHANGING AT THE SITE 20

A. Preparing for the Weekly Sample Change 21
B. Removing the Exposed Cassettes 21
C. Inserting the Clean Cassettes 22

IV. SAMPLE HANDLING AFTER SHIPMENT FROM THE SITE 23

A. Receiving the Blue Box 24
B. Reviewing the Field Logsheet 24
C. Unloading and Cleaning the Cassettes 26

1. Module A fine Teflon filters 26
2. Module B fine nylon filters 26
3. Module C fine quartz filters 27
4. Module D PM10 Teflon filters 27
5. IMPROVE Dot Chart 27

D. Checking and Entering the Field Data 28

1. Review the Field Logsheet for Quality Assurance 28
2. Entering the field data into the sample-handling database . . . 28

E. Processing and Shipping the Exposed Filters 29

1. Module A fine Teflon filters 29
2. Module B fine nylon filters 30
3. Module C fine quartz filters 30
4. Module D PM10 Teflon filters 31

V. SAMPLE ANALYSIS 32

A. Gravimetric Mass Analysis 32
B. Laser Integrating Plate Analysis (LIPM) 33
C. PIXE/PESA Analysis 36
D. Ion Chromatograph Analysis (IC) 37

1. Receipt of the filter 37
2. Filter extraction 38
3. Ion analysis 38
4. Data transfer to UCD 38

E. Thermal Optical Reflectance Analysis (TOR) 39

VI. PROCEDURES FOR DATA PROCESSING 41

A. Introduction: The Equations of Concentration and Uncertainty . . . 41

1. Volume 41
2. Gravimetric Mass 41
3. Optical Absorption 42
4. PIXE Analysis 42
5. PESA Analysis 42
6. Ion Analysis 42
7. Carbon Analysis 42

B. Entering the Data into the Concentration Database 43
C. Validating the Data 44
D. Preparing Magnetic Tapes and Floppy Disks 44
E. Preparing the Seasonal Summaries 44

VII. PROCEDURES FOR SAMPLER MAINTENANCE 45

A. Evaluating Sampler Modifications 45
B. Calibrating the Flow Audit Device 45
C. Preparation for Annual Site Visit 46
D. Annual Site Visit 46

Standard Operating Procedures for
IMPROVE
Particulate Monitoring Network
July 1989

List of Tables and Figures

Table 1. Filter used in standard IMPROVE sampler 7

Table 2. Filter identification code for Teflon filters 13

Table 3. Sample identification code and color code for all filters 15

Figure 1. Schematic of IMPROVE Sampler 6

Figure 2. Flow diagram for the procedures for sample handling before the shipment of the clean filters to the sampling site. The starred procedures (*) are done by the carbon contractor . . 10

Figure 3. Flow diagram for sample changing at the site 20

Figure 4. Flow diagram for the procedures for sample handling after the receipt of the exposed filters from the sampling site . . . 23

Figure 5. Schematic of the LIPM system 33

I. INTRODUCTION

A. Role of Procedures in the IMPROVE system

The nature and extent of the particulate monitoring program based on the IMPROVE sampler require carefully designed operating procedures. The procedures have developed out of our experience in operating monitoring networks since 1973. Some of the major factors influencing the procedures are as follows.

1. There are presently 48 sites using the IMPROVE sampler (20 IMPROVE, 19 NPS, 7 NESCAUM, 2 Lake Tahoe), requiring the processing of over 500 filters each week. The large flow of samples requires sample-handling procedures in the laboratory to be as efficient as possible. To handle this workload, the procedures in the laboratory have been separated into well-defined tasks.

2. The system uses multiple filter media, with a given filter following one of 6 different pathways. It most of these pathways, it is necessary to identify the clean filter as well as the exposed filter. This complexity requires a sample-identification system that is simple and reliable. The procedures must include numerous cross-checks, but cannot be allowed to become cumbersome. The procedures must incorporate a good inventory system so that all filters can be accounted for at any time.

3. Most of the sites are located in pristine regions where the ambient concentrations of fine particles are extremely low, often 1 to 2 orders of magnitude below urban levels. The low loadings require procedures that minimize and monitor any contamination of the samples. For example, every box of clean filters is given a date on which the filters are to be installed in the sampler, in order to avoid filters remaining at the sites too long and picking up extra contamination. In addition, the filters remain in sampling cassettes from the time they leave the laboratory until the time they return.

4. Since the samples are collected twice a week, it is essential that the downtime of the samplers be kept to a minimum. This requires procedures that ensure a steady flow of clean filters to the site. The procedures must also include internal checks of the field information to identify problems with the sampler and with sample collection. It is essential that the problems be identified and rectified rapidly.

5. The particulate data are to be used in various source-receptor models to determine causes of visibility impairment. The data must be able to stand legal scrutiny. The procedures must include sufficient quality assurance checks to provide the most accurate and dependable results possible.

6. The changing of filters at the sampling site is handled by persons who are involved in the program less than an hour a week. Therefore, the field procedures must be simple and self-evident. By making the normal routine as simple as possible, the field operators can concentrate on abnormalities.

B. The IMPROVE Sampler

The IMPROVE sampler consists of four independent filter modules and a common controller, as shown in Figure 1. Each module has its own inlet, PM2.5 or PM10 sizing device, flow rate measurement system, flow controller, and pump. The 4 pumps are housed in a separate unit to isolate their vibration from the rest of the sampler.

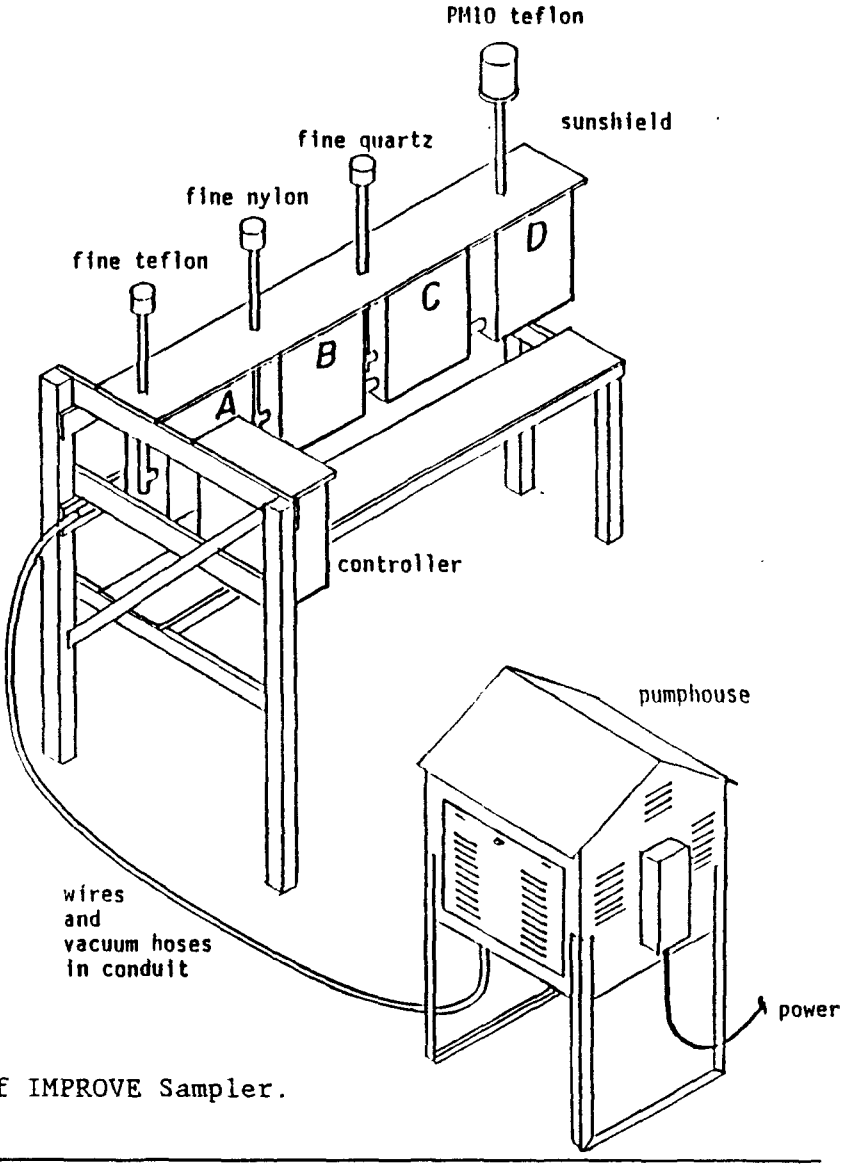

Figure 1. Schematic of IMPROVE Sampler.

Each module in the standard sampler has two filter cassettes, with the first cassette collecting samples on Wednesday and the second on Saturday. Each filter cassette is color-coded, with one set of colors referring to the module (red, yellow, green, blue) and the second set to the first or second cassette within the module (black, white). Table 1 lists the major data for each module, including the filter media, the color codes, and the analytical techniques.

Table 1. Filters used in standard IMPROVE sampler.

module	particle size	filter material	color code	analytical methods
A	PM2.5	Teflon	red	mass, LIPM, PIXE, PESA
B	PM2.5	nylon	yellow	IC
C	PM2.5	quartz	green	TOR
D	PM10	Teflon	blue	mass

The filters are transported to and from the site in sealed cassettes using specially designed shipping containers. The field operator removes the cassettes with exposed filters and inserts the new cassettes without directly handling the filters. With this system it is possible to have multiple filters in a single cassette. The C module has two quartz filters in tandem, with the second filter to monitor the artifact caused by adsorption of organic gases; this second filter is not routinely analyzed. For NPS congressionally mandated sites, the D module has an impregnated filter following the Teflon filter in order to measure sulfur dioxide gas.

C. Responsibilities for Maintaining the Procedures

The overall responsibility for the procedures belongs to the Project Manager. He is responsible for appropriate coordination between personnel to maintain the procedures. As a senior scientist, the Project Manager is responsible for characterizing and calculating the various artifacts and uncertainties in the collection and analysis. This includes proposing QA tests using the Davis Field Station.

The Quality Assurance Manager is responsible for the details of the procedures. He works closely with the Field Support Manager to verify that the proper procedures are being followed in the sample-handling laboratory and in the field. He is responsible for validating the results of the various UCD analytical systems and the final data, including the data from the external contractors.

The Field Support Manager is responsible for the procedures in the sample-handling laboratory and for procedures in the field. Included in the laboratory procedures are the procedures for measuring mass and absorption. He coordinates with the external contractors to maintain a proper flow of samples and data. He coordinates with the Field Engineer to correct sampler problems immediately and oversees the annual maintenance schedule.

The Field Support Manager is also the sample-handling laboratory supervisor. Assisting him are three full-time laboratory technicians and several student technicians.

The maintenance of the samplers is the responsibility of the Field Engineer and the Field Technician. This responsibility includes the annual audit and routine maintenance. These persons are also responsible for conducting QA tests at the Davis Field Station, including tests to consider the feasibility of sampler modifications.

The PIXE/PESA Manager is responsible for the procedures to be followed in the analysis of the samples by PIXE and PESA.

The Support Group is responsible for developing and maintaining the computer hardware and software used in the procedures. The software includes several programs for sample handling, programs for the PIXE and PESA analytical methods, programs for data reduction and validation, and programs for data presentation and transmission. The Head of the CNL Computer Support Division is the Computer Support Manager. The other members of the group are the Quality Assurance Manager and the PIXE/PESA Manager. All three members of the Computer Support Group have considerable experience in aerosol analysis. The group coordinates with three additional staff members who develop and maintain software relating to operating procedures.

D. Overview of the Standard Operating Procedure Document

The procedures are separated into 6 segments. The first 3 segments concern sample handling: before shipment to the site, at the site, and after return from the site. These procedures are designed to maintain a smooth flow of samples, assure good inventory control, and minimize contamination. The fourth segment treats the several analytical techniques used in the program. The purposes of the analytical procedures are primarily to maintain the highest quality analyses and secondarily to maintain efficiency. The fifth segment examines the procedures to produce the concentration database from the analytical results, to validate the data, and to generate the seasonal data summaries. This section includes procedures to compare all the data in order to detect possible errors.The final segment deals with procedures for routine and unscheduled maintenance of the samplers in the field. At the beginning of each of these segments there is a flow diagram or a summary of the procedures of the segment.

Supplemental information is included in appendices to these segments. Appendix 1 lists the various forms used in the three sample-handling segments. Appendix 2 describes the IMPROVE sampler and the field procedures in detail. Appendices 3 to 7 give more detailed operating procedures of the various analytical procedures. Appendix 8 provides additional lists for the annual inspection and maintenance of the samplers, and forms for flow audits.

II. SAMPLE HANDLING BEFORE SHIPMENT TO THE SITE

The handling procedures in this section cover all actions from the purchase of the filters up to the shipment of the clean filters to the sampling site. Figure 2 gives the flow diagram for this portion of the procedures. UCD is responsible for all actions in this section except for the purchase and pre-firing of the quartz filters, the responsibility of the carbon contractor.

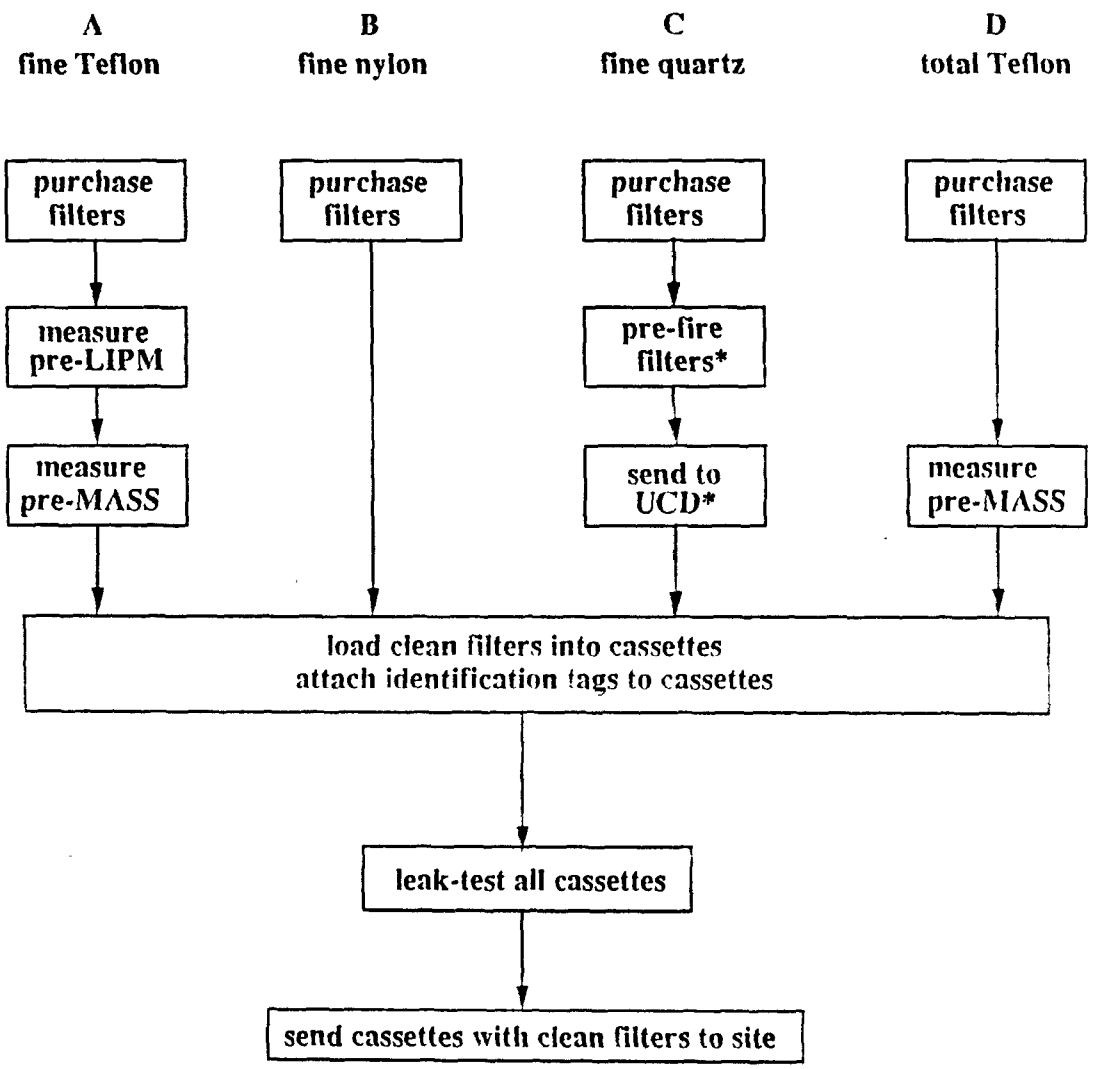

Figure 2. Flow diagram for the procedures for sample handling before the shipment of the clean filters to the sampling site. The starred procedures (*) are done by the carbon contractor.

A. Preparing the Clean Filters

This section includes the procedures for preparing the four types of clean filters used at the IMPROVE sites: fine Teflon, fine nylon, fine quartz, and PM10 Teflon. Because the procedures differ significantly between the types, each type will be treated individually. This section includes procedures from two analytical methods: gravimetric mass (MAS) and the Laser Integrating Plate Method (LIPM). The procedures are discussed in detail in sections V-A and V-B.

1. Module A fine Teflon filters

   a. Purchase Teflon filters (Gelman Teflo) from commercial vendor.

   b. Prepare collection masks.

      The collection mask fits underneath the fine Teflon filter in the cassette and reduces the area of collection. The primary purpose is to improve the sensitivity of the PIXE and PESA analyses by concentrating the particles. The mask also reduces the mass artifact by isolating the filter from the O-ring. The decrease in the area of collection is limited by filter clogging; in regions of high concentrations the flow rate can be reduced below the acceptable range.

      The collection masks are prepared from the inert paper spacers that Nuclepore Corporation provides between Nuclepore 47 mm 8 um polycarbonate filters. The spacers have a very light coating of Apiezon-L grease. Many years of experience have shown that this paper will not transfer mass to the filters. The spacers are retained in their original factory containers when 47 mm Nuclepore filters are processed for other studies. These containers are labelled and sealed until required as stock for preparing the collection masks.

      The masks are prepared using specially machined double-action cutter punches. The cutter punches simultaneously cut the 25 mm outer diameter and the desired collection diameter. Both punch and cutter are concentric, centering the collection area in the 25 mm mask. It is imperative that the cutter punch be handled gently and the heat-treated and ground edges be protected. The edges are very sharp and can cause injury. If the cutter punch is dropped or not correctly used, damage to the cutter punch will result and it will have to be remachined.

      The procedures for preparing the collection masks are as follows.

      i. Obtain a sealed and marked container of 100 Nuclepore spacers from the laboratory supply.

ii. Obtain the correct punch for the desired collection area, generally 2.2 cm^2.

iii. Obtain a thick pad of clean, pure Teflon material from the laboratory supply retained for this purpose. This pad, approximately 1/2-inch thick, provides a cutting surface that will not dull or change the geometry of the cutter punch faces.

iv. Place the Teflon material on the base of the mandrel press. Open the mandrel press enough to accommodate the cutter punch assembly when resting on the Teflon. Initially, place no more than 5 spacer papers on the Teflon pad and center them under the cutter punch. Gently, but firmly, apply pressure to the assemby with the press arm until a distinct cutting sound is heard and felt. Open the press and observe that 25 mm masks with the desired hole have been produced. Remove the completed masks and put them in a clean container. Discard the excess spacer material.

v. Verify that the mask geometry is correct. Using a vernier inside/outside caliper from the laboratory supervisor, measure the inside diameter of the fabricated masks. Make several measurements and determine the mean. For a 2.2 cm^2 collection area, the diameter should be 16.73 $\pm$ 0.01 mm. (The collection area of the actual particles on the filters has been found to equal this measured area.)

vi. With practice and experience, up to 10 masks can be produced at a time. If incomplete cutting occurs, reduce the number of pieces of stock in the press back to 5.

vii. When all 100 spacers in the original supply have been converted to masks, seal the masks in their container. Wrap the cutter punch with tape and return it to the protective foam box. Return the Teflon pad to its storage.

c. Process a group of 50 filters through the LIPM station.

At this station the filters are given filter identification numbers and the precollection LIPM values (pre-LIPM) are measured. The filter identification number is used for the Teflon filters (modules A and D) to associate the precollection values of LIPM and mass with a given filter. The filter identification codes are given in Table 2. The filter identification system is used in addition to the sample identification system that specifies the sampling site and the date of collection. The correspondence between the two numbering systems is made after the exposed filter returns from the site.

Table 2. Filter identification code for Teflon filters.

	module	collection area	code
fine Teflon	A	1.1 cm^2	TFnnnn.M2
fine Teflon	A	2.2 cm^2	TFnnnn.M1
fine Teflon	A	3.8 cm^2	TFnnnn.M0
PM10 Teflon	D	3.8 cm^2	TFnnnn.U

i. Prepare 50 Filter Identification Tags (red Avery dot labels) with the next sequential filter identification number. (Check last assigned number on the A-Preweight Logsheet and increment by one.) Obtain a petri box of 5o petri dishes and place the Filter Identification Tags on the petri dishes. Record the numbers on the A-Preweight Logsheet.

ii. Insert clean Teflon filters from the supply into the 50 Quickie Mounts of the LIPM system.

iii. Measure the 50 pre-LIPM values following the procedures described in section V-B. (The pre-LIPM value is the intensity of light transmitted through the clean filter.) Record each pre-LIPM value alongside the filter identification number on the A-Preweight Logsheet.

iv. Place each filter in its proper petri dish. Place the petri dish back in the petri box and label the box.

d. Measure the tare masses of 50 filters (pre-MASS).

The filters are weighed in batches of 50 filters. Within this batch the work is separated into groups of approximately six filters. Between each group of 6 filters, the calibration of the balance is checked. If necessary, the balance is recalibrated.

Remove 6 petri dishes from the appropriate petri box and measure the pre-MASS values of the filters following the procedures described in section V-A. Record the pre-MASS value of each filter alongside the proper filter identification number on the A-Preweight Logsheet. Return each filter to its petri dish after weighing and return the petri dish to the petri box.

e. For each of the 50 entries on the A-Preweight Logsheet, enter the filter identification number, the pre-MASS value, and the pre-LIPM value in the sample-handling database.

2. Module B fine nylon filters

   Purchase nylon filters (Gelman Nylasorb) from commercial vendor. No further processing is necessary.

3. Module C fine quartz filters

   a. (carbon contractor) Purchase Pallflex 2500QAT-UP quartz filters.

   b. (carbon contractor) Pre-fire the quartz filters at 900° for at least 4 hours, following operating procedures developed by the contractor.

   c. (carbon contractor) Ship the carbon filters to UCD. These are identified by lot number.

   d. (UCD) Receive the prefired quartz filters and store in the freezer until required for the loading sequence.

4. Module D PM10 Teflon filters

   a. Purchase Teflon filters (Gelman Teflo) from commercial vendor.

   b. Prepare 50 Filter Identification Tags (blue Avery dot labels) with the next sequential filter identification number. (Check last assigned number on D-Preweight Logsheet and increment by one.) Get a petri box of 50 clean petri dishes and place the Filter Identification Tags on the petri dishes. Record the numbers on the D-Preweight Logsheet.

   c. Measure the 50 pre-MASS values following the procedures described in section V-A. (The pre-MASS value is the tare mass of the filter.) Record each pre-MASS value alongside the filter identification number on the D-Preweight Logsheet. Place each filter in its proper petri dish after the weighing and return the petri dish to the petri box. Label the petri box when finished.

   d. For each of the 50 filters on the D-Preweight Logsheet, enter the filter identification number and the pre-MASS value into the sample-handling database.

B. Loading the Cassettes

The procedures in this section are triggered by having a Blue Box with empty cassettes. The Blue Box is a shipping container that was specifically designed to transport the weekly supply of filter cassettes between UCD and the sampling sites. The blue case is molded ABS material with metal reinforcement. The cassettes are vibrationally and thermally insulated by a soft polyurethane foam liner. The case is

water-tight and held closed with cam locks. Molded on the front of the case is the message "KEEP OUT OF DIRECT SUNLIGHT." On the front there is a flush-mounted mailer with a metal frame and an indented section to display the site-date tag. The mailer has a reversible prepaid mailing label. The UCD address is on one side of the mailer, while the site address is on the other. Each Blue Box is assigned to a given site. For each site there are 5 to 7 Blue Boxes in the system.

1. Prepare the Field Logsheet with the site and date sequence.

   a. The Blue Box will have the site and date for the desired sample change listed on the outside label. Verify that this date agrees with those of the next tags on the sheet of preprinted sample identification numbers for this site. Update the IMPROVE Dot Chart to indicate that sample preparation is in progress.

   b. Record the appropriate sample identification numbers corresponding to each sample on the Field Logsheet. Table 3 gives the code for the sample identification numbers and the associated color codes for all of the modules. (The color code is used to mark the cassettes.)

Table 3. Sample identification code and color code for all filters.

module	filter	color code	sample identification code	
A	1	red/black	site-date-A1	
A	2	red/white	site-date-A2	
B	1	yellow/black	site-date-B1	
B	2	yellow/white	site-date-B2	
C	1	green/black	site-date-C1P	(primary)
			site-date-C1S	(secondary)
C	2	green/white	site-date-C2P	(primary)
			site-date-C2S	(secondary)
D	1	blue/black	site-date-D1	
D	2	blue/white	site-date-D2	

The site code is the standard four-letter NPS code. (e.g. ROMO)
The date is that for the Tuesday of the sample change. (e.g. 1/7/89)

---

2. Check the cleanliness of the module A cassettes and load them with clean Teflon filters.

   a. Remove the protective red cap from the A1 cassette (red/black) and verify its cleanliness.

b. Remove the cassette top and the lock ring. Check that the top has a single flat gasket. Recheck the condition and the cleanliness of the collection mask, the drain disk, and the ethylene propylene (EP) O-ring. Replace the drain disk, if it has discarded during cleaning or if it is dirty. Replace the EP O-ring, if it was removed during cleaning or if it deformed. Be careful to return the filter grate with the finer grids oriented up and the large bar grids down. If necessary, reclean the filter grate and O-ring by gently brushing with the brush reserved for nonquartz cassettes.

c. Verify that the correct collection mask is installed; if the mask is dirty or worn, replace it with a new one.

d. Remove the next petri dish from the fine Teflon petri box. Transfer the filter identification tag from the petri dish and the sample identification tag from the pre-printed sheet to the top cap, locating them between the exposed ridges. Center and mount the clean drain disk, the collection mask, and the Teflon filter on the grate. The rough and extended edges of the filter should mate with the mask. This orientation will present an open, smooth, and flat surface. Gently place the lock ring on the cassette, taking care to keep the filter centered and not damage the filter support ring. Place the cap with a single flat gasket over the lock ring and tighten it. Keep all elements centered and make it finger tight. Reinstall the protective red cap designated "A" over the cassette.

e. Record the filter identification number on the Field Logsheet.

f. Put the cassette in the Blue Box.

g. Repeat procedure for the A2 casette (red/white).

3. Check the cleanliness of the 47 mm module B cassettes and load them with clean nylon filters.

a. Check the cleanliness of the B1 cassette (yellow/black) following the procedures for module A.

b. Transfer the Sample Identification Tag from the pre-printed sheet to the cassette. There is no filter identification number for the nylon filter.

c. Obtain a clean nylon filter from the supply and load it into the cassette directly on to the diffusion and support grid.

d. Put the cassette in the Blue Box.

e. Repeat for the second nylon filter (B2, yellow/white).

4. Check the cleanliness of the module C cassettes and load them with clean quartz filters.

   The module C cassettes contain two sections, each with a quartz filter. The first or primary filter collects all the particles and adsorbs organic gases, while the secondary filter only adsorbs gases.

   a. Disassemble each section of the C1 cassette (green/black) and check the cleanliness. Assure that two flat silicone rubber gaskets are used in the cassette cap of the first section. Two gaskets are needed to provide spacing so that the hold down retainer of the cyclone manifold will fit. If there is still any glass filter debris, remove it with the brush reserved for quartz cassettes. Replace the drain disk if it was removed during cleaning or if it is dirty. Replace the O-ring with a Viton O-ring, if it was removed during cleaning or if it is deformed.

   b. Load a clean quartz filter from the supply into each section of the cassette.

   c. Record the lot number for each filter on the Field Logsheet.

   d. Transfer the Sample Identification Tags from the pre-printed sheet to each section of the cassette. The primary filter has the suffix "P", while the secondary filter has the suffix "S."

   e. Put the cassette in the Blue Box.

   f. Repeat for the second quartz cassette (C2, green/white).

5. Check the cleanliness of the module D cassettes and load them with clean Teflon filters.

   a. Check the cleanliness of the D1 cassette (blue/black) following the procedures for module A.

   b. Insert a clean Teflon filter from the module D container box. Do not use a collection mask with this filter. Mount the filter with the ribbed side down and the smooth side up. ("Up" means facing the incoming air.)

   c. Attach the Filter Identification Tag and the Sample Identification Tag to the outside of the cassette.

   d. Record the filter identification number on the Field Logsheet.

   e. Put the cassette in the Blue Box.

f. Repeat for the module D2 cassette (blue/white).

6. If a dynamic field blank (DFB) cassette is in the DFB queue, include it in the current Blue Box. (The DFB is identified by having a yellow cap on the hose end.) Do not include more than one DFB per Blue Box. The type of module D cassette must match the normal type for this site, with respect to the impregnated filter. Repeat the procedure for a cassette of the given module. Add the suffix DFB to the sample-identification number. Include the standard letter describing how to install the DFB.

7. This completes the loading of the cassettes. Transfer the Blue Box to the leak-test area. Leave the Blue Box open.

C. Verifying the Loading Procedures and Leak-testing the Cassettes.

At this point, all the cassettes have been loaded with clean filters, have their identification tags, and are in an open Blue Box, along with the accompanying Field Logsheet.

1. Verify that all cassettes are present and have been loaded with clean filters.

2. Verify that the filter- and sample-identification numbers and the quartz-lot numbers correspond to those recorded on the Field Logsheet.

3. Record these numbers on the Mailer Record Logcard.

4. Mount a cassette on the leak-test element designated for the specific module, following the standard color code. Hand tighten the nut. Remove the protective red cap and place the appropriate leak-cap gently over the open cassette face. There are two leak-caps, one for 25 mm and one for 47 mm. Open the vacuum valve and observe the flowmeter. If the flow rate is less than 1 L/min, the system is considered to be airtight. If the flow rate exceeds this value, find and remove the leaks (recenter components, replace O-rings, etc.).

   Special care is required for the module C quartz cassettes. Because of the fragility of the filters, it is not possible to get as good a seal; the criterion for this module is 3.5 L/min. Begin by tightening the secondary filter, and then tighten the primary filter. Be careful to tighten each filter segment only to a "firm" hand tightness. An absolute leak seal cannot be guaranteed by further tightening. Excessive tightening will cause the lock ring to sever the edges from the filter. This will cause the cassette to leak significantly, and the flow meter will rise sharply. The filter will appear to warp. Replace all filters which have been overtightened.

5. Replace the protective red cap designated for the module.

6. Repeat the leak-test for the remaining cassettes in the Blue Box.

7. Record the current date on the Mailer Record Logcard in the column marked "date shipped."

8. File the Mailer Record Logcard in the Mailer File chronologically by site. Verify that the this card follows the previous card by 1 week.

D. Prepare the Blue Box for Shipment.

1. Make certain the reusable, reversible mailer label on the Blue Box displays the site destination.

2. Update the IMPROVE Dot Chart by filling in the site/week box with yellow ink.

3. Place the Blue Box in the mailing tub for dispatch.

III. SAMPLE CHANGING AT THE SITE

Sample changing is performed every Tuesday by the field operator. Each site has a manual (Appendix 2) with the procedures and a description of the program and the sampler. The procedures are also written on the inside of the doors for the controller, module A, and module D. Figure 3 gives the flow diagram for sample changing.

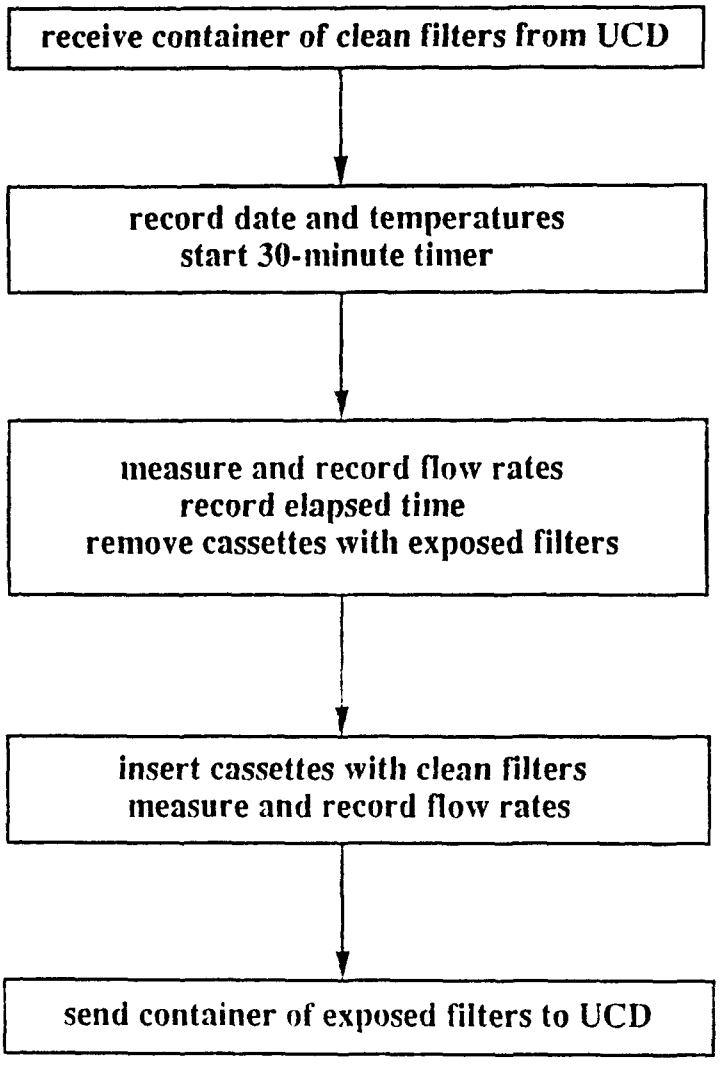

Figure 3. Flow diagram for sample changing at the site.

A. Preparing for the Weekly Sample Change

1. When the Blue Box is received at the site, record on the Receipt Log, the date received and the date written on the label of the Blue Box. The Blue Box should be received 1 to 2 weeks before the date for sample-changing.

2. Keep the Blue Box in a clean, dry, and cool location.

3. For the Tuesday sample change, take two Blue Boxes to the site: the empty Blue Box with last Tuesday's date (Old Blue Box) and the full Blue Box with the current Tuesday's date (New Blue Box).

B. Removing the Exposed Cassettes

1. Remove the Field Logsheet from the Old Blue Box. The front side will have been filled in last Tuesday. On the reverse side, record the present date and time, your initials, and the current, the minimum, and the maximum temperatures.

2. Open the control module and verify the date and time of the controller clock. Turn the bypass timer to 30 minutes. This will start all four pumps.

3. For each module (A, B, C, D) in turn, do the following:

   a. Record the small gauge before pressing either filter switch. This should be between 16 and 25 "Hg, depending on the elevation. If it drops below this, the problem might be internal pump failure or leaks in the hose. Call UCD.

   b. Press the filter 1 toggle switch and record the small gauge and the magnehelic gauge. Repeat for filter 2. The readings should be near the green line marked on the gauges. See manual or instructions on door for troubleshooting help.

   c. Record both elapsed times in hundredths of hours and zero both timers. Times of 24.00 hours are expected.

   d. Remove each cassette from the holder by first unscrewing the hose from the solenoid. Then unscrew the knurled knob holding the cassettes enough to lift the support bracket and remove the cassette. Do not remove the knob completely. Get the protective red cap marked for this module from the old box. Put the cap on the cassette and place the cassette in the Old Blue Box. When finished with module D, place the completed Field Logsheet in the Old Blue Box.

C. Inserting the Clean Cassettes

1. Remove the Field Logsheet from the New Blue Box. Check the date on the box and on the Field Logsheet; if this is not the present date for the week, make a note on the Field Logsheet. Fill in the current date and time and your initials.

2. Insert the cassettes for each module in turn, selecting the two cassettes for each module: red for A, yellow for B, green for C, and blue for D. Remove the red cap from the black (filter 1) cassette and put the cap in the New Blue Box. Insert the cassette into the left side of the manifold (under the clamp) and attach the hose onto the left (filter 1, black) solenoid. Hand tighten the nuts on the cassette. Do not use a wrench or pliers to tighten them. Make certain both cassettes are firmly mounted on the manifold and tighten the knurled knob.

3. Record the gauges for each module in turn.

   a. Check that the elapsed timers were reset.

   b. Record the small gauge before pressing the toggle switches.

   c. Press the filter 1 toggle switch and record both gauges. If either gauge is not near the green line, check the troubleshooting guide inside the module A or D door.

   d. Press the filter 2 toggle switch and record both gauges.

4. Store the Field Logsheet in the New Blue Box.

5. Reverse the mailing label on the Old Blue Box with the exposed filters, so that the label shows the UCD address. Do not add postage; the shipment is prepaid, First Class. Send the Blue Box to UCD.

6. If a dynamic field blank is sent with the Blue Box, it is accompanied by a form letter describing the special steps required. The dynamic field blank is needed to monitor any contamination in the system. It follows the same path as an actual sample, except that no air is drawn through. The cassette with the dynamic field blank has a yellow cap on the end of the hose and has the suffix DFB on the end of its identification number (e.g. GUMO 09/17/89 A1<u>DFB</u>.) Do not remove the yellow cap. The hose will be tagged with the color appropriate for that module. The blank is inserted on the maniford in place of one of the two manifold caps, so that there are three cassettes on the manifold. When the cassettes are removed on the following Tuesday, replace the cap on the cyclone manifold.

IV. SAMPLE HANDLING AFTER SHIPMENT FROM THE SITE

The handling procedures in this section cover all actions from the receipt of the Blue Box with exposed filters up to the transfer of the filters to the external contractors or to the queue for cyclotron analysis. Figure 4 gives the flow diagram for this portion of the procedures.

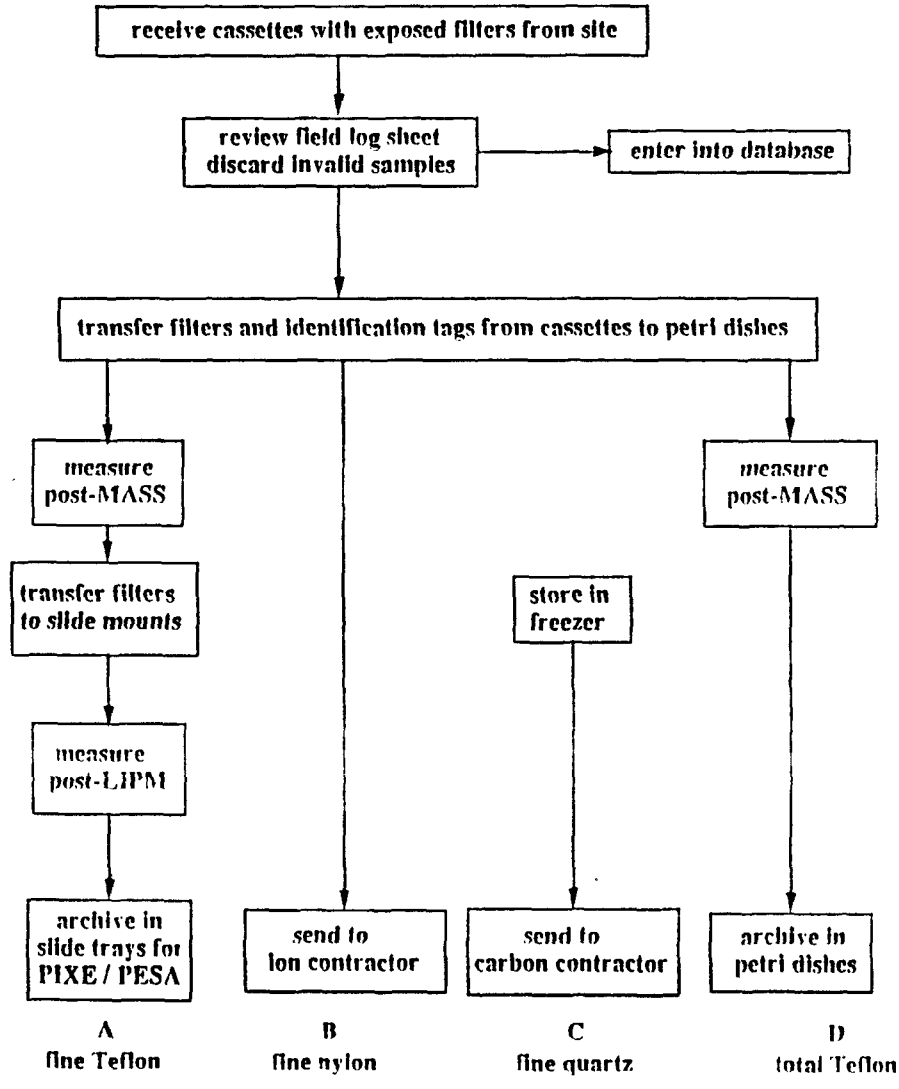

Figure 4. Flow diagram for the procedures for sample handling after the receipt of the exposed filters from the sampling site.

A. Receiving the Blue Box

1. Immediately upon receipt of the Blue Box of exposed cassettes from the site, update the IMPROVE Dot Chart by placing a blue dot in the site/week box, on top of the yellow coloring.

2. Clean the outside of the Blue Box.

B. Reviewing the Field Logsheet

The Field Logsheet is reviewed by the person who removes the exposed filters. The review is conducted prior to the removal. The Field Logsheets will be reviewed again by the laboratory supervisor prior to their entry into the sample-handling database.

If correction or explanation is required, draw a single line through the existing information using a fine red pen, and enter the correct information. Comments should also be made using the fine red pen.

1. Verify that the actual date of the sample change corresponds to the sample date of the sample-identification numbers. (Actual dates that are 1 or 2 days before the sample-identification date are acceptable.)

   If the dates do not agree, and the samples were not collected over multiple periods, replace each Sample Identification Tag with one indicating the actual Tuesday sampling date. The discrepancy in dates could occur if the field operator used the incorrect Blue Box.

2. Check for omissions. If possible estimate the correct reading from other readings on the Field Logsheet, or from readings on the previous Field Logsheet. If the solution is not evident, check with the laboratory supervisor and call the field operator. (If the correct data cannot be determined the sample will have to be invalidated.)

3. Review the comments by the field operator and take action accordingly. If an equipment or hardware malfunction is reported, take action to correct the problem.

4. Verify that all closed-solenoid gauge readings (system vacuum without sampling air flow) are greater than 16 inches mercury.

5. Verify that magnehelic values range from 0.20 to 0.60.

6. Verify that filter pressure drops measured on the small gauge are in the following approximate ranges.

A	≤ 1.5	inches	mercury
B	≤ 2.0	"	"
C	≤ 5.0	"	"
D	≤ 1.5	"	"

7. Verify that the sampling durations are approximately 24.00 hours. For sites running with small generators known to have variable frequency (CANY, ARCH, and ISRO), if the times range from from 23.6 to 24.4 hours, correct the times to 24.00 hours. (The controllers use quartz clocks and are not affected by the line frequency.) This variation reflects a frequency variation of ±1 hertz.

8. If the samples are not valid they are generally removed from the normal system at this point and put in the Unusable Archive. The action must be recorded on both the Unusable Archive Inventory and the Field Logsheet. Add the suffix, listed below, appropriate to the action to the sample-identification number on both the Sample Identification Tag and the Field Logsheet (e.g. ROMO 3/15/88A1XX). Include a short explanation on the Field Logsheet of why the sample is invalid, such as "Cassette loose and moved from sample port" or "Tubing attaching support broken." Transfer the filter to a petri dish and put the petri dish in the Unusable Archive. If there are questions concerning validity, check with the laboratory supervisor. If necessary, call the field operator. The three acceptable suffixes and the accompanying reasons for invalidating a sample and archiving it in the Unusable Archive are:

   a. DB: double sample. The samples were exposed for longer than 24 hours, that is, over more than one period.

   b. PF: pump failure. The vacuum gauge readings with the solenoids closed are less than 15 inches of Hg.

   c. XX: invalid for other reasons. The sample ran for less than 12 hours, the filter has a hole, the filter has obvious problems (not centered properly, grill upside down), the filter was dropped or contaminated by water, the cassette is broken.

9. In two cases, when the filter clogs or when the filter is not installed in the sampler, the invalid samples are given a suffix, but are not removed from the normal system at this point. The samples will be analyzed but the data will be discarded during the data validation procedures. Add the suffix appropriate to the action to the sample-identification number on both the Sample Identification Tag and the Field Logsheet. If there are questions concerning validity, check with the laboratory supervisor. If necessary, call the field operator. The suffixes and the accompanying reasons for including a sample in this category are:

   a. CG: clogged filter. The final magnehelic reading is less than 1/2 of the initial reading, resulting in unreliable flow rate measurements. (This sample is kept to document the factors involved in clogging.)

b. TB: transport blank. The filter was returned without having been installed in the sampler. (The transport blank is used to determine artifacts from all causes except adsorption of gases.)

10. Enter the date and your initials as reviewer at the end of the Field Logsheet.

C. Unloading and Cleaning the Cassettes

1. Module A fine Teflon filters

a. Remove the protective red cap from the A1 cassette (red/black) and verify its cleanliness. If required, wipe the inside of the cap with a Kimwipe dampened with ethanol.

b. Remove the cassette top and the lock ring. Transfer the fine Teflon filter to a petri dish and transfer the accompanying Filter Identification Tag and Sample Identification Tag from the cassette to the petri dish.

c. Place the petri dish in the fine Teflon storage tube.

d. If an incorrect collection mask was used, write the actual mask used (e.g. "1.1 cm^2 mask") on the Field Logsheet with the red pen. Change the filter-identification number on the Field Log Sheet and on the Filter Identification Tag to the correct mask code.

e. Check the condition and the cleanliness of the collection mask, the drain disk, and the EP O-ring. Discard the drain disk if dirty and the O-ring if deformed. Clean the filter grate and O-ring by gently brushing with the camel-hair brush reserved for nonquartz cassettes. Discard the collection mask if the visible aerosol is not uniformly circular.

f. Reassemble the cassette.

2. Module B fine nylon filters

a. Transfer each nylon filter to a petri dish and transfer the accompanying Sample Identification Tag from the cassette to the petri dish. There will be no Filter Identification Tag.

b. Transfer the petri dishes to the nylon petri box.

c. Record the sample-identification number on the RTI-Ion Contractor Inventory.

d. Clean the cassettes following the procedures for module A.

3. Module C fine quartz filters

The module C cassettes contain two sections, each with a quartz filter. The first or primary filter collects all the particles and adsorbs organic gases, while the secondary filter only adsorbs gases.

a. Transfer each fine quartz filter to a petri dish and transfer the accompanying Sample Identification Tags from the cassette to the petri dish. Keep the primary and secondary filters separate.

b. Place the petri dishes in the quartz petri box. When the box is full, return the petri box to the freezer.

c. Record the sample-identification number on the DRI-Carbon Contractor Inventory.

d. If two filters were inadvertently used for either the primary or the secondary filter, process them as a single filter, and write a comment on the Field Logsheet. (This occasionally occurs because the quartz filters tend to stick together.)

e. Make certain that <u>two</u> flat silicone rubber gaskets are used in the cassette cap of the first section. Disassemble each section of the cassette and clean. Gently brush away glass filter debris with the brush reserved for quartz cassettes. Make sure no debris is retained under the lip of the anti twist lock ring. Brush the debris into a waste receptacle. Be careful not to raise or breathe any filter debris dust during this operation. The quartz debris is highly electrostatic and can contaminate other samples. Discard the drain disk if dirty and the O-ring if deformed.

4. Module D PM10 Teflon filters

a. Transfer each PM10 Teflon filter to a petri dish and attach the accompanying Filter Identification Tag and Sample Identification Tag to the petri dish.

b. Place the petri dishes in the PM10 Teflon storage tube.

c. Clean the cassettes following the procedures for module A.

5. Find the date for the next unprocessed week for this site on the IMPROVE Dot Chart. Make a new tag for this site-date and place the tag in its place on the Blue Box. Transfer the Blue Box to the queue for clean filter processing.

D. Checking and Entering the Field Data

This step consists in reviewing the Field Logsheet a second time and entering the data on the Field Logsheet into the sample-handling database. It can be performed at any time after the Field Logsheets are initially reviewed and the filters are removed from the cassettes. The second review is conducted by the laboratory supervisor or his representative prior to the entry of the field data into the sample-handling database.

1. Review the Field Logsheet for Quality Assurance

   a. Verify that there is an entry for every space on the sheet.

   b. Verify that the correct identification codes were made for all samples. Verify that the dates are all correct or have been corrected on the Sample Identification Tags and the Field Logsheet.

   c. If the data indicate any mechanical problems, verify that all necessary corrective action has been initiated. If necessary, call the field operator.

   d. Check for consistency between the module B pressure drop and the magnehelic readings. Low magnehelic readings may indicate that the denuder has caused condensation to accumulate in the high pressure side of the magnehelic. Call the field operator and have him remove the hose, drain the water, and re-attach it. This operation requires less than a minute.

   e. Verify that the temperatures have been reported in Celsius; if not, convert them.

   f. Check for discrepancies in the elapsed time. If one of the elapsed times is less than the others for the same sampling period, find the reason for the difference. Either correct the value or discard the sample.

   g. Review the comments of the field operator.

   h. When you are satisfied that the Field Logsheet is complete and correct, place your initials as reviewer above the date changed on the front side of the Field Logsheet.

2. Entering the field data into the sample-handling database

   The entry is performed through the computer program DOLOGS. The steps of this program are as follows.

a. To the question of which record is to be entered, enter the site code (4 characters) plus the subcode "1", and enter the date encoded in the sample-identification number (e.g. "GLAC 05/02/89"). It is essential that this entry be correct.

b. The program will now call up each entry individually, following the layout of the Field Logsheet.

c. If a character is typed incorrectly, use the backspace to delete the character, and then type the correct character.

d. If incorrect data has already been entered, use the displayed menu to modify the data.

e. When the last entry has been completed, the program will automatically return to the site-date question for a new Field Logsheet.

f. When the data for a Field Logsheet have been completely entered into the data base, use a date stamp and a red inkpad to stamp the current input date in the upper left corner of the reverse (final) side of the Field Logsheet.

g. Place the date-stamped Field Logsheet in the file folder for that site and season maintained in the IMPROVE file cabinet. The Field Logsheets should be arranged in sequential order.

E. Processing and Shipping the Exposed Filters

At this point, the exposed filters are in petri dishes with their identification tag(s), and the dishes are in the appropriate storage container. Each filter type now follows a separate pathway.

1. Module A fine Teflon filters

a. Determine the post-MASS

In this segment, the post-MASS is determined and the filter transferred to a slide mount.

i. Get a petri dish from the fine Teflon storage tube. Determine the post-MASS following the procedures of section V-A.

ii. Record the post-MASS on the Mounted Samples Logsheet.

iii. Load the filter into a slide mount.

Mark the white side of the slide mount with a blue indelible wide-tip felt pen in four places. Write the sample-identification number on the left, write the

filter-identification number on the top, and write the site code on the right. Read the position number corresponding to the sample date on the position chart on the wall and mark this number on the bottom edge of the mount. Place this bottom edge into the temporary slide tray first; this number will be hidden by the tray structure.

iv. When the temporary slide tray is full, transfer the tray to the LIPM analysis queue.

b. Measure the post-LIPM value for each sample in the temporary tray, following the procedures described in section V-B. Record the post-LIPM value for each slide on the Mounted Samples Logsheet.

c. Enter the sample-identification number, the filter-identification number, the post-MASS, and the post-LIPM into the sample-handling database, for each of the 50 lines on the Mounted Samples Logsheet.

This action connects the filter-identification number and the sample-identification number, permitting the computer to get the proper pre-MASS and pre-LIPM values. At this point the computer will determine the net mass and optical absorption of the sample, check that the values are in the acceptable range, and print a message to the technician. If the values are not acceptable, the technician will check the entries.

d. Transfer the slides from the temporary tray into permanent site-specific trays. (Each site-specific tray will hold the samples for one season. The position in the tray corresponds to the sampling period within the season.) The number at the bottom of the slide mount will give the position in the tray. Place the tray in the queue for PIXE analysis.

2. Module B fine nylon filters

When four petri boxes (200 nylon filters) have accumulated, ship the boxes to the ion contractor via First Class Mail, along with the Nylon Filter Inventory.

3. Module C fine quartz filters

Retain the petri boxes of exposed quartz filters in the freezer until the large shipping container of 10 boxes (500 filters) is filled. Add blue ice to the shipping container and ship to the carbon contractor by Federal Express or UPS Second Day so that the filters will remain cold during transport. Include the Quartz Filter Inventory.

4. Module D PM10 Teflon filters

   a. Get a petri dish from the PM10 storage tube. Determine the post-MASS following the procedures of section V-A. Record the post-MASS on the PM10 Archive Logsheet. Enter the sample-identification number, the filter-identification number, and the post-MASS into the sample-handling database.

   b. Return the filter to the petri dish. Place the petri dish in the next position in the 50-position petri box for permanent archiving. Record the sample and filter-identification numbers on the PM10 Archive Logsheet. When the Archive petri box is full, label the box and archive it.

V. SAMPLE ANALYSIS

A. Gravimetric Mass Analysis

For sample-handling procedures before and after the gravimetric mass analysis, see sections I-A-1, I-A-4, III-E-1, and III-E-4. For the startup precedures every morning and afternoon, see Appendix 3 for Cleaning and Calibration of the Electrobalance, and IMPROVE Gravimetric Controls.

Never turn the electrobalance off.

1. Remove the filter from the petri dish by gently slipping the flat forcep under the outer polyolefin support ring. IMPORTANT: The forceps should contact only the outer support ring of the filter. Do not touch the deposit area. Place the filter momentarily on the antistatic strip, with the aerosol side up. Discard the petri dish if this is an A filter. Repeat for approximately 5 more filters.

2. Enter the appropriate identification numbers on the appropriate logsheet:

   module A precollection ..... A-Preweight Logsheet
   module D precollection ..... D-Preweight Logsheet
   module A postcollection .... Mounted Samples Logsheet
   module D postcollection .... PM10 Archive Logsheet

3. Remove the filter from the antistatic strip and place it aerosol side up in the center of the weighing pan but offset toward the right side of the pan by approximately 2 mm. The offset is required so that the filter can be removed from the pan after weighing without putting stress on the balance. If the filter is inadvertantly centered on the pan, use a second pair of forceps to nudge the filter very gently to a position where the flat forceps can again grasp the filter support ring only.

4. Close the glass door and allow the electrobalance to stabilize. This will require approximately 30-45 seconds. Note that the digital weight readout will slowly decrease until stabilized.

5. When the balance is stabilized, record the mass value on the logsheet.

6. Remove the filter by opening the glass door and gently grasp the filter support ring with forceps. IMPORTANT: Be very careful not to grasp the edge of the weighing pan while removing the filter; pulling the balance pan could damage the balance. Slowly remove the filter from the balance cavity and place it either in the same petri dish (D filter) or on a prepared PIXE slide mount with the aerosol side up (A filter).

7. After every 6 measurements, allow the balance to stabilize without a filter to observe the "zero." If this value exceeds ±2 micrograms, recalibrate the balance following the procedures of Appendix 3.

8. Whenever the balance is not in use, close the balance glass window.

B. Laser Integrating Plate Analysis (LIPM)

The LIPM system is used to measure the optical absorption of the particles on the fine Teflon filters. The absorption by the particles on the filter is smaller than the absorption by particles in the atmosphere because of the layering of particles on the filter. A correction to the measured value, based on the areal density of particles on the filter, is made at the time of data processing. A schematic of the system is given in Figure 5. Light of 633 nm wavelength from a He(Ne) laser is diffused and collimated to provide a uniform beam of light of approximately 0.7 cm^2 at the sample. The light transmitted through the sample is collected with an Oriel 7022 photodiode detection system. The decrease in light intensity is produced by both absorption and large-angle scattering. (Light undergoing small angle scattering will be collected by the detector.) The blank Teflon filter does not absorb light, but it does scatter light; therefore, it is necessary to measure the transmission of the blank filter. For the particles on the filter, the absorption is the primary cause of decrease in light intensity, with only a small amount of scattering.

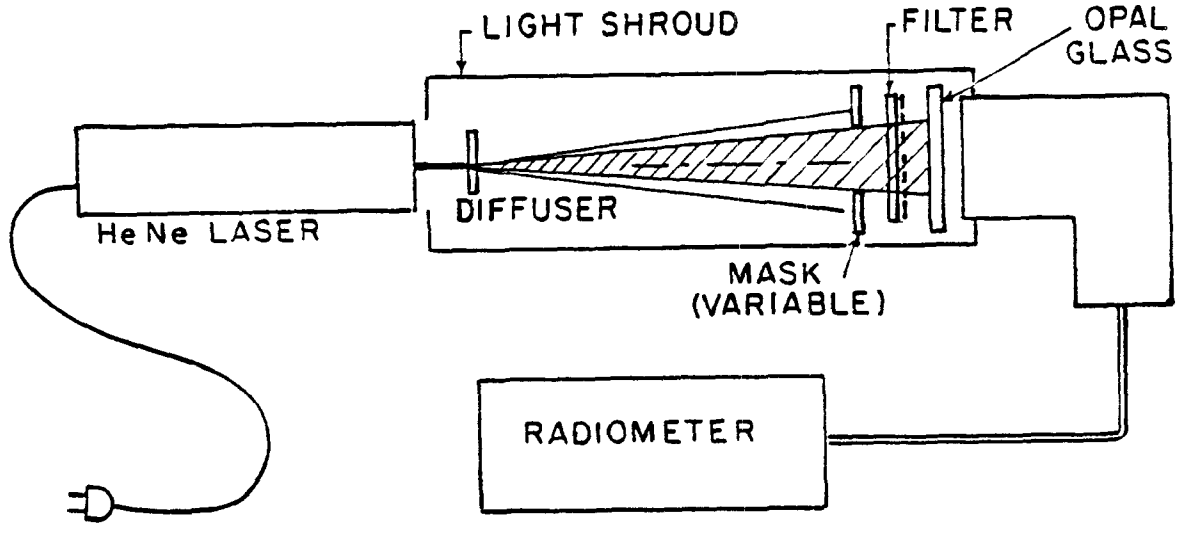

Figure 5. Schematic of the LIPM system.

The UCD LIPM system is designed to handle samples in 18x24 mm slide mounts arranged in linear trays. Prior to the analysis of the pre-collection clean filters it is necessary to put the filters in slide mounts; specially modified slide mounts (Quickie Mounts) have been machined to simplify the process. These Quickie Mounts keep the filters centered but permit the filters to be inserted and removed easily. The exposed filters are arranged in permanent slide mounts and linear slide trays prior to the post-LIPM analysis.

The system is calibrated at the beginning of every analytical session, following the procedures of Appendix 4. The system is adjusted to give a reading of 0.000 when then Beam Attenuation lever is closed and 0.750 when no sample is present. A set of standard samples are analyzed and the measurements are compared with the standard values. If the measurements differ by more than a preset value, approximately equal to the uncertainty of the measurement, the calibration is repeated. If differences still exist, the system is examined for problems.

The steps for the pre-LIPM analysis is as follows. See section I-A-1 for procedures before and after the pre-LIPM measurement.

1. Clean the flat metal forceps with ethanol and transfer 50 Teflon filters into Quickie Mounts. (The "Quickie Mount" is a modified slide mount used to hold the filters during the precollection LIPM analysis.) Note that each filter support ring has two distinctive sides, the smooth side and the lipped side.

   Place the filter in the Quickie Mount with the smooth side facing the black side of the mount. This orientation is followed in other Air Quality Group protocols and assures that smooth side is always the aerosol side, and that the smooth side always faces LIPM and PIXE detectors. This standardized procedure also assures that when aerosols cannot be visibly seen, the orientation on the filter is known.

2. Place each Quickie Mount in the 40 position slide tray with the black side to the front. This will assure the black face with filter smooth aerosol side faces the detector. Note that the position 1 corresponds to the sample identification 1 or 51 in the identification sequence.

3. Place the filled slide tray to be prelasered in the LIPM system. Adjust the calibration level to 0.750 using the vernier multipler extension arm.

4. Push the slide in position 1 fully into the system. Observe and record the value on the A-Preweight Logsheet under "Pre Laser". Representative values should be between 0.350 and 0.500.

5. Periodically verify that the calibration level of 0.750 is maintained when the slide changer is fully out. Continue until all filter prelaser values are obtained and recorded.

6. Remove the 40 position slide tray from the LIPM system and orient it such that the openings of the Quickie Mounts are vertical. Carefully remove the filters sequentially and place them in their corresponding petri dishes. After closing each petri dish, return it to its petri box.

7. Repeat steps 4-6 for any remaining filters in the group of 50.

   When the petri box is full (50 petri dishes), close it and attach a 1-1/2"x3" white Avery label to the container showing the sequential filters enclosed, the date of the pre-LIPM analysis, and your initials. Also include a space to enter the data for gravimetric analysis.

   Example: TF 4551.M1 thru 4600.M1
   Prelasered 5/15/89 KW
   Preweighed _____ ____

   Place the completed container and the A-Preweight Logsheet next to the electrobalance to facilitate the pre-Mass analysis.

The post-LIPM analysis follows the post-MASS analysis (cf. section III-E-1). At this point in the process, the exposed filters have been mounted on permanent slide mounts arranged in temporary 40-position linear slide trays. Each filter has been centered on the mount with the aerosol face towards the black side of slide mount, and the sample date, the filter-identification number, the site code, and an archive position number have been written on the white side of the mount. Accompanying the tray is a Mounted Samples Logsheet. This logsheet identifies the position, the sample-identification number, the filter-identification number, the post-MASS and provides the location to record the post-LIPM values. The procedures for the post-LIPM analasis are as follows.

1. Calibrate the LIPM system as in the pre-LIPM analysis.

2. Place the 40-position slide tray in the holder on the LIPM apparatus. Adjust the vernier multiplier extension lever to read 0.750 with the slide changer fully out.

3. Sequentially cycle slide mounts and filters into the system. Record the post-LIPM value for each sample in the Postlaser position on the Mounted Samples Logsheet.

4. Periodically verify that the calibration level of 0.750 is maintained when the slide changer is fully out.

5. When all samples in the tray have been analyzed, transfer the slide mounts to the permanent linear slide trays organized by site.

6. Leave the LIPM system on, with the slide changer out and the cover closed.

7. Enter all the data from the Mounted Samples Logsheet into the sample-handling database and put the logsheet in the permanent file.

C. PIXE/PESA Analysis

The UCD Particle Induced X-ray Emission Analysis (PIXE) system has been optimized to analyze lightly loaded aerosol samples. The system uses a 4.5 MeV proton beam from the Crocker Nuclear Laboratory cyclotron to excite x-rays in the sample. The analysis program controls the cyclotron beam and the changing of the samples. The x-rays are measured by two detectors. The first detector measures the entire spectrum from Na to Pb, but is optimized for elements with x-rays below the main line of Fe. The second detector is optimized for Fe and above. With the two-detector system, it has been possible to reduce the minimum detectable limit of elements heavier than Fe by a factor of more than 2.

The PESA system runs concurrently with the PIXE system, and determines the concentration of hydrogen in the sample. The method is most effective when the filter material does not contain any hydrogen, as is the case with teflon.

1. Run the dBIII program to produce the instruction files for the PIXE/PESA analysis. The program will determine the flow rates, the elasped time, the volume/unit area (used in PIXE to calculate concentration in mass/volume), the mass, the optical absorption and other collection parameters and validity flags. The program will control which samples to analyze and will permit the calculation of concentrations at the time of analysis.

2. Run the PIXE system using a source to verify the correct operation of the detector system.

3. Run the PIXE standards tray of approximately 40 standards. These are single element, double element, and multi-element standards. Verify the calibration of the system and update renormalization values to compensate for small shifts in the system.

4. Run the PESA standards tray immediately after the PIXE standards tray. This tray includes several mylar standards plus a series of blank Teflon filters. Enter the calibration value from the mylar standards into the analysis parameter file. Record the hydrogen values for the blanks. Select the cleanest blank to be used as a system blank for PIXE to estimate the background of x-rays in the spectra.

5. Reanalyze a tray of filters from an IMPROVE site analyzed during the previous IMPROVE analysis session. Compare the concentrations of the two analyses for all major elements, including hydrogen. If the Quality Assurance Manager and the PIXE/PESA Manager find the calibration and reanalysis acceptable, begin actual analysis.

6. Run the actual IMPROVE samples. Each tray contains all samples for a given season from a single site. Initialize the analysis of the samples in the tray by entering the identification code of the tray in the acquisition program. Initialize the spectral analysis program by entering the run number of the analysis. Check the following features in the PIXE spectral analysis of the sample. If any problems are detected, consult with the QA Manager, the PIXE/PESA Manager, or a senior scientist.

   a. Is the background completely removed by the two background steps? That is, do the valleys between the peaks in the final spectrum go to zero. If not, determine if the problem is an inappropriate blank. Verify on the output log that the run number of the blank is correct. Do not revise the fitting parameters without consulting with the QA Manager or PIXE Manager.

   b. Periodically check the agreement of elements in the overlap region of the two detectors. Make a note on the PIXE Runsheet if the ratio of the two Fe's differs significantly from 1.0.

   c. Monitor the livetime of the detectors and the cyclotron beam current carefully. If the livetime drops below 50% or if the beam integrated charge begins to decrease, ask the cyclotron operator to either drop or raise the beam current.

   d. After every three trays, while the next set is being loaded into the system, run the QA program to generate the standard correlation and time plots for the three sites just analyzed. Note any anamolies for the QA Manager.

7. Rerun the standards at the end of the session and verify the results.

8. Before ending the run, wait until the QA Manager is able to validate the results for all of the trays. If problems in the analysis are determined, select the trays and samples involved and reanalyze them.

D. Ion Chromatograph Analysis (IC)

The procedures of the ion analysis by the ion contractor, Research Triangle Institute, are given in complete detail in Appendix 6. This section will summarize the procedures.

1. Receipt of the filter

   The exposed filters are shipped from UCD to RTI in batches of 200 filters. Record the following data on the Sample Log Form when the shipment is received: the sample indentification numbers, the date of receipt, and any comments on the condition of the samples.

2. Filter extraction

   a. Desorb the sample in 15 mL of desorbing solution.

   b. Expose the sample and solution to ultrasonic energy for 30 minutes.

   c. Allow the sample and solution to sit overnight.

3. Ion analysis

   The analyses are performed on two ion chromatographs, Dionex Manual Model 2120i and Model 14. The following calibration and standards are run separately on the two units. The model used to analyze a given sample is included in the reported data, although there does not appear to be any bias between the models. The steps below are performed daily.

   a. Run a quality control standard (made at least weekly from independently prepared stock solutions); proceed only if the value agrees with the predicted value to within 10%.

   b. Inject 100 mL of sample and solution into the IC unit and analyze for chloride, nitrite, nitrate, and sulfate.

   c. At the midpoint of the day, determine the calibration of the model by running a series of calibration solutions of varying concentrations.

   d. During each day, run a quality assurance sample (EPA Acid Precipitation Audit sample) and reanalyze one sample (Duplicate Sample).

   e. Periodically run a blank sample of only the desorbing solution.

4. Data transfer to UCD

   The data are transferred to UCD via ASCII files on floppy disk in groups of at least one batch of samples. The following information for chloride, nitride, nitrate, and sulfate is provided for each batch. All values are in units of micrograms/filter.

   a. The values, mean, and standard deviation of the quality control standard for each IC unit.

   b. The values, mean, and standard deviation of the quality assurance standard for each IC unit.

   c. The values for each sample. This includes dynamic field blanks, travel blanks, laboratory blank, and other quality assurance samples provided by UCD.

E. Thermal Optical Reflectance Analysis (TOR)

The procedures of the carbon analysis by the carbon contractor, Desert Research Institute, are given in complete detail in Appendix 7. This section will summarize the procedures.

The measurements are made using an OGC/DRI thermal/optical carbon analyzer. The method is based on the preferential oxidation of organic and elemental carbon compounds at different temperatures. It relies on the fact that organic compounds can be volatilized from the sample deposit in a helium atmosphere at a lower temperature than elemental carbon. A small punch is removed from the sample and placed in the analyzer. The temperature and oxidizing environment are changed in time. This volatilizes carbon compounds, which are first converted to carbon dioxide by passing the compounds over heated manganese dioxide; the carbon dioxide is next reduced to methane. The amount of methane is then measured by a flame ionization detector.

The principal function of the optical (laser reflectance) component of the analyzer is to correct for the pyrolysis of organic compounds to elemental carbon. Without this correction, the organic carbon fraction of the sample would be underreported and the elemental carbon fraction would include some pyrolyzed organic carbon. The correction is made by continuously monitoring the optical reflectance of the filter and sample using a laser and photodetector. This reflectance, largely dominated by the presence of black elemental carbon, decreases as pyrolysis takes place and increases as elemental carbon is liberated during the higher temperature stages.

1. Receipt of the filter

   The exposed filters are shipped from UCD to RTI in batches of 500 filters. Record the sample-identification number for each sample in the Air Analysis Logbook upon receipt. Store the samples in a freezer until analysis.

2. Carbon analysis

   a. Remove a punch from the filter and place the punch in the sample boat.

   b. Place the sample boat in the analyzer and begin the automatic sequence.

   c. At the end of the analysis, examine the thermogram for proper laser response, temperature profiles, realistic carbon peaks, and the presence of the calibration peak at the end of the analysis. If a problem is found, analyze another punch from the sample.

d. Analyze replicate samples at a rate of one replicate per ten samples.

3. Validate the analyses following the procedures described in Appendix 7.

4. Provide the results in micrograms/filter to UCD in ASCII files on floppy disks. Include both the original and the replicate analyses.

VI. PROCEDURES FOR DATA PROCESSING

A. Introduction: The Equations of Concentration and Uncertainty

1. Volume

The volume is the product of the average flow rate and the sample duration. The average flow rate is calculated the the gauge reading recorded on the Field Logsheet and stored in the sample-handling database. The average flow rate depends on the average temperature over the sampling period, but not on the temperatures at the times of measurement. The equations for the average flow rates from the magnehelic and small gauge readings are:

magnehelic: $AFM = a (M1^b + M2^b) / 2 * (Tavg/Tcal)^{1/2}$

small gauge: $AFG = [c - d(G1+G2)/2] * (Tavg/Tcal)^{1/2}$.

The variables in these equations are:

M1, M2	initial and final magnehelic readings
G1, G2	initial and final small gauge readings
a,b,c,d	calibration constants during audit
Tcal	absolute temperature at the time of audit
Tavg	average absolute temperature during sampling

In the following equations, V is the volume and fV is the fractional uncertainty in volume. The fraction uncertainty in volume equals the fractional uncertainty in flow rate, since the duration is well defined. The uncertainty can be estimated from internal and 3rd-party audits. The value determined in this manner includes both precision and accuracy. The difficulty in making the estimate for the IMPROVE sampler is that the precision of the built-in flow measurement system is as good as the precision of most audit devices. At present, the best estimate of internal precision of average flow rate is that it is better than 1%. and the best estimate of total uncertainty is that it is better than 3%. All results from internal and 3rd-party audits are recorded in the audit database. All calculations are based on a volume uncertainty of 3%.

2. Gravimetric Mass

The equation for the mass concentration is

$$C = (M - B) / V,$$

where M is the mass difference between the post-MASS and pre-MASS, and B is the mass artifact determined from the mean of the controls and the dynamic field blanks. The uncertainty in concentration is

$$\sigma C = [(fV\ C)^2 + (\sigma FB / V)]^{1/2},$$

where σFB is the standard deviation in the controls and field blanks. The minimum detectable limit (mdl) is 300 ng/m^3.

3. Optical Absorption

The equation for the coefficient for the particles on the filter depends on the initial and final LIPM measurements, the volume, and the area. The values are multiplied by 0.97 to compensate for scattering by the particles. To calculate to coefficient in the atmosphere, it is necessary to divide the measured coefficient by a factor R that depends on the areal density of the particles on the filter. The coefficient in the atmosphere is calculated by the equation

$$b = (area/V) * 10^4 * \ln(PRE/POST) * 0.97 / R .$$

4. PIXE Analysis

The artifact concentrations for the PIXE elements are zero. PIXE determines the areal density of the given element; to determine concentration, this areal density is multiplied by (area/V). The uncertainty of the concentration is the quadratic sum of the volume uncertainty, the analytical uncertainty of calibration (proportional to measured value), and the statistical uncertainty associated with the number of counts in each spectral peak. The 3% volume uncertainty and the 4% PIXE calibration uncertainty add together to give a total uncertainty of 5%. The total uncertainty is thus 5% plus statistics, added quadratically.

5. PESA Analysis

The equations for PESA for hydrogen are the same as for PIXE. Again, there is no significant hydrogen artifact on dynamic field blanks.

6. Ion Analysis

Analysis of field blanks indicate that there is artifact formation during the period in the cassettes. The standard deviation of the field blanks provides an estimate of the uncertainty of the artifact. The data from replicate samples indicate that the analytical uncertainty is proportional to measured value, rather than a constant. The equations of concentration and uncertainty in concentration are

$$C = (M - B) / V,$$

$$\sigma C = [(fV\ C)^2+(\sigma FB/V)^2+(fA*M/V)^2\ ]^{1/2},$$

where M is the mass measured by the ion analysis and fA is the fractional uncertainty in the analysis. The mdl is equal to twice the uncertainty with no loading

$$mdl = 2\ (\sigma FB/V) .$$

7. Carbon Analysis

Organic carbon artifact is caused by contamination in the filter material, by contact with the cassette, and by the adsorption of organic gases during collection. Elemental carbon artifact is caused by contamination in the filter material and by contact with the cassette. At present, we have insufficient data to to define the various equations for organic and elemental carbon.

B. Entering the Data into the Concentration Database

1. Run the dBIII program FLOWS to calculate and print all the flow rates. This program will select the appropriate calibration constants, obtain the data from the sample-handling database, and calculate the flow rates. (The calibration database contains a record of every flow rate calibration with the constants and the date of measurement.) The flow rates will be calculated and printed. Check all cases when the two flow rates differ significantly, find the cause, and correct the information in the sample-handling database.

2. Run the dBIII program TRAY to create the instruction files for PIXE/PESA and begin the process of transferring data from the sample-handling database to the concentrations database. This program will include the following information in the instruction file, using the data from the sample-handling database:

   a. The module A average flow rate from the magnehelic readings.

   b. The module A sample duration (elapsed time).

   c. The volume / area.

   d. The fine mass concentration and uncertainty.

   e. The PM10 mass concentration and uncertainty.

   f. The coefficient of absorption and uncertainty.

   g. The filter-identification number for module A.

   h. Information on the start time and date, and the site name.

   i. Instructions on which samples to analyze.

3. These data are transmitted from this instruction file to the PIXE/PESA spectra files, and from there to the PIXE/Pesa output files.

4. When the data from the external contractors are available for a complete season, run the program IONS to generate similar output files for the ion and carbon concentrations. This program combines the collection data from the sample-handling database with the masses from the external contractors to determine the concentrations and uncertainties.

5. Run the program PROM to combine the output files from the last two steps to produce concentrations database files. Each file contains all the data for a single site and season; this information is encoded in the file name (e.g. ACAD1A1D.C88).

C. Validating the Data

At this point, the data from the external contractors have undergone an internal analytical validation process. The gravimetric mass and absorption values have been check for consistency. The PIXE/PESA analyses have been check for internal consistency. In this segment of the procedures the different variables are intercompared, and the results are examined for anomalous variations with time.

The procedures here are followed by the Quality Assurance Manager.

1. Run the programs CORFIL and CORCOF, using the data in the concentrations database, to generate desired correlation plots for all sites. This should be done for the following pairs: Si and Fe, S*3 (Teflon,PIXE) and SO4=(nylon,IC), mass and H, mass and reconstructed mass, OC and organic mass by hydrogen and sulfur.

2. Run the program IMPSUM to generate time plots of major variables.

3. Run the program DBP to generate a wide variety of statistical comparisons.

4. Check the results for systematic variations.

5. Check individual anomalies; look for errors in transcribing data.

D. Preparing Magnetic Tapes and Floppy Disks

1. Run program DBP to create ASCII versions of the concentrations database files.

2. PIP the files to the magnetic tape or to a floppy disk, as desired.

E. Preparing the Seasonal Summaries

1. Run the program IMPPG2 to prepare a table of concentrations and a table of averages for key physical variables at each site for the season.

2. Run the program IMPSUM to prepare a page of time plots of key physical variables for each site for three-month period.

3. Use the averages files from IMPPG2 to prepare contour maps of key physical variables for the network.

VII. PROCEDURES FOR SAMPLER MAINTENANCE

The following procedures are to be followed by the Field Engineer and the Field Technician. Sections A, B, and C are to be followed at Davis, while section D is done in the field.

A. Evaluating Sampler Modifications

If a modification to the sampler is being considered, first set up an experiment at the Davis field site to test the modification and its impact on the entire sampling process thoroughly. (The modifications will normally be made during the annual site visit.)

B. Calibrating the Flow Audit Device

The flow audit device is used to audit the flow rate of the samplers. The device is first calibrated at UCD using a spirometer and a dry gas meter.

1. Set up the calibration system to be the same as with a normal sampling system: the air enters through the measuring orifice, then passes through the cyclone, a cassette/valve assembly to imitate a loaded filter, a critical orifice, and the pump. Connect the survey spirometer to the exhaust side of the pump. The spirometer measures the displaced volume over a given time.

2. Start the calibration by turning on the pump and adjusting the valve so that the reading on the audit magnehelic is 1.0 "H2O.

3. Start the spirometer chart recorder rotating and mark the displacement in liters. Repeat for two to four revolutions of the chart recorder, or until the measurements are consistent.

4. Compute the flow and record the flow on the Audit Calibration Logsheet.

5. Verify the flow rate using the dry gas meter. Install the meter to the intake of the cyclone and take a 5-minute measurement. Repeat the calibration procedure if the spirometer and dry gas meter measurements do not agree.

6. Repeat the calibration procedure for magnehelic readings of 1.0, 0.8, 0.7, 0.6, and 0.4 "H2O.

7. Calculate a best-fitting logarithmic equation, following the procedures of Appendix 2.

8. Record the date, temperature, and atmospheric pressure at the time of calibration.

9. Label the orifice meter with the calibration date, temperature, pressure, and 5-point logarithmic equation.

10. Enter the orifice meter calibration data into the audit database.

C. Preparation for Annual Site Visit

Each site will be visited at least once per year, normally in spring or summer. The steps prior to the visit are

1. Notify the appropriate land management departments about one month prior to the scheduled site visit with information on the site, approximate date of the visit, and the name of the visiting technician.

2. Notify the site operator two weeks prior to scheduled visit. Coordinate the exact date of arrival with the site operator. Determine if the site operator is having any problems with the sampler and/or sample handling.

3. Conduct a Site Review

   Prepare a folder for each site to contain a site checklist, a Maintenance Checklist (Appendix 8), a copy of the previous flow rate calibration, and any other pertinent information.

   a. Review the site summary for the previous year and note any problems on the site checklist.

   b. Review the description of site location and note any missing information, such as site pictures.

   c. Review the Field Logsheets for the previous year and note any problems with flow rates and defective parts on the site checklist.

   d. Consult with the Sample Handling Laboratory Supervisor about any special problems for the site that should be considered during the visit.

   e. Review the concentration data with the Quality Assurance Manager, with special emphasis on (1) any inconsistencies that may be attributed to faulty sampler operation, and (2) any change in elemental composition indicating changing emissions. Record any significant results on the site checklist.

D. Annual Site Visit

The site visit will include any necessary modifications to the sampler, replacement of the nitrate denuder, a complete inspection of the entire sampler and replacement of any defective or deteriorating parts (such as hoses and O-rings), an audit of the flow rate calibration, and optional operator training. The steps are

1. Review the performance of the site with the field operator. Review the site information summary sheet. Obtain any missing information for the description of site locations, including taking site pictures.

2. Perform an initial inspection following the Maintenance Checklist (Appendix 8).

   a. Take the final readings of any exposed filter and record the values on the Field Logsheet.

   b. Inspect the controller module.

      Read the program of the control clock. Check the control clock override switches by turning the sampler off. Turn the bypass timer to thirty minutes and verify the delayed pump startup. Record any damage on the Maintenance Checklist.

   c. Inspect the filter modules.

      Record on the Maintenance Checklist any damage to solenoid values, elapsed timers, relays, toggle switches pressure guage and magnehelic. Check the maximum vacuum of all of the pumps. Verify the proper installation of cassettes. If they are improperly installed, discuss the proper procedures with the site operator.

   d. Inspect the pumphouse and the pumps and record any damaged parts.

3. Conduct the initial flow rate audit.

   a. Fill out sampler calibraton log information. Include the date, altitude, temperature and orifice meter calibration constants.

   b. Install the calibration cassettes in filter 1 for each module.

   c. Leak-test the system.

   d. Return the bypass timer to thirty minutes.

   e. Audit the four flow rates indicated on the sampler calibration logsheet for each module.

   f. Calculate the orifice meter value corresponding to the indicated flow rates. Adjust for the ambient pressure and temperature using the calculated correction factor.

   g. Press the filter 1 switch and record the vacuum ("Hg) and magnehelic values.

   h. Remove the aluminum cap at the bottom of the stack and insert the orifice meter into the stack opening.

i. Press the filter 1 switch and record the value from the orifice meter magnehelic. (This value should correspond to 23.0 lpm.)

j. Install the valve inline between the filter and the critical orifice.

k. With the orifice meter in place, press the filter 1 switch and adjust the valve until the orifice meter magnehelic indicates the desired flow rate.

l. Remove the orifice meter from the bottom of the stack and insert the aluminum cap.

m. Press the filter 1 switch and record the vacuum ("Hg) and magnehelic values.

n. Repeat step c.

o. Repeat steps f, g, and h.

p. For auditing flows higher than the nominal flow rate, use an empty cassette.

q. Repeat steps i and j until you have finished audit.

r. For the PM-10 module audit, insert the orifice meter where the stack attaches to the cassette holder and leave it in throughout the audit procedure.

s. Zero all the magnehelics.

4. Perform the scheduled maintenance following the Maintenance Checklist (Appendix 8).

5. Final Calibration

a. Calibrate the fine filter modules to 2.5μm cut point by inserting a 23.0 lpm critical orifice.

b. Calibrate the PM-10 module to 10.0μm cut point by inserting an 18.9 lpm critical orifice.

c. Check all cyclone O-rings to insure that they are seated.

d. Perform leak-test.

e. Perform the multipoint flow audit again.

f. Use a permanent pen to mark the maximum, nominal, and minimal flow values on the faces of the magnehelic and vacuum gauges.

g. Replace the calibration cassettes with the proper monitoring cassettes.

h. Record the initial readings on the Field Logsheet.

i. If the audit took place on Wednesday or Saturday, start the sampler by pressing the appropriate override switch. Record the length of time the sampler was not operating on the Field Logsheet.

j. Calculate the logarithmic equations for all modules using the data collected in the multipoint audit.

6. Enter the Calibration Equations

After returning from the sites, verify the logarithmic equations for all modules at every site. Input the site visit information into the calibration database system. Record the logarithmic equations, the site code, the temperature at the time of the final multipoint audit in degrees Celsius, the elevation factor, and the date.

APPENDICES

APPENDIX 1: Logsheets Used in Sample Handling

APPENDIX 2: IMPROVE Sampler Manual

APPENDIX 3: Gravimetric Mass Startup Procedures

A. Cleaning and Calibration of the Electrobalance

B. IMPROVE Gravimetric Controls

APPENDIX 4: LIPM Startup Procedures

APPENDIX 5: PIXE/PESA Procedures

APPENDIX 6: Ion Contractor Procedures (RTI)

APPENDIX 7: Carbon Contractor Procedures (DRI)

APPENDIX 8: Maintenance Checklist (Annual Site Visit)

Appendix A-1

Logsheets Used in Sample Handling

APPENDIX 1: Logsheets Used in Sample Handling

A. Balance Log--Record of calibration date and significant events for each balance at UCD.

B. LIPM Calibration Logsheet--Record of calibration data for UCD LIPM system.

C. IMPROVE Dot Chart--Portion of large chart posted on the laboratory wall, indicating the status of all filters by the use of several colors.

D. A-Preweight Logsheet--Record of data for module A filters, before collection.

E. D-Preweight Logsheet--Record of data for module D filters, before collection.

F. Mailer Record Logcard--4"x6" card, record of date that each filter was shipped to sampling site.

G. Field Logsheet--Record of data for sample change. The front side is for clean filters and the reverse side for exposed filters.

H. Mounted Samples Logsheet--Record of data for module A filters, after collection.

I. PM10 Archive Logsheet--Record of data for module D filters, after collection. Accompanies each box of 50 filters in PM10 Archives.

J. External Contractor Inventory--Sample identification numbers of all exposed filters sent to the Desert Research Institute or to the Research Triangle Institute for analysis. Accompanies each box of 50 filters in shipment.

K. Unusable Archive Inventory--Record of sample identification numbers with problem code for samples that are damaged or otherwise invalid. Accompanies each box of 50 filters in archive.

A. Balance Log--Record of calibration date and significant events for each balance at UCD.

Date	Temp	Time	Zero .003/ .000	Calibration 199.976/ 200.000	50.000 mg. std. 50.011	20.000 mg. std. 20.004	Initials
5.22.89	76°	0816	0.023/0.000	200.005/200.000	49.970		TC
5.22.89	79°	1315	0.006/0.000	200.002/200.000	49.972		MH
5.23.89	82°	0815	0.001/0.000	200.004/200.000	49.967		TC
5.23.89	79°	1415	0.003/0.000	199.996/200.000	49.970		MH

B. <u>LIPM Calibration Logsheet</u>--Record of calibration data for UCD LIPM system.

LASER CALIBRATION

DATE/Initials	#1	#2	#3	#4	#5	#6	#7	#8	#9	#10	Comments
5 15 89	.080	.295	.411	.324	.285	.256	.191	.092	.037	.034	DD
5 15 89	.076	.300	.411	.328	.284	.257	.192	.093	.038	.035	CA
5 16 89 BS	.077	.296	.407	.326	.283	.256	.189	.093	.037	.035	Impressive!
5.22.89/TC	.077	.294	.412	.328	.286	.257	.189	.094	.037	.035	
5.22.89, ~~85.~~ MH	.077	.297	.410	.327	.283	.255	.192	.094	.038	.035	
5.23.89	.077	295	.411	.326	.285	.258	.192	.093	.038	.035	DD
5.24.89	.077	.293	.410	.325	.287	.258	.192	.093	.038	.035	DD

C. IMPROVE Dot Chart--Portion of large chart posted on the laboratory wall, indicating the status of all filters by the use of several colors.

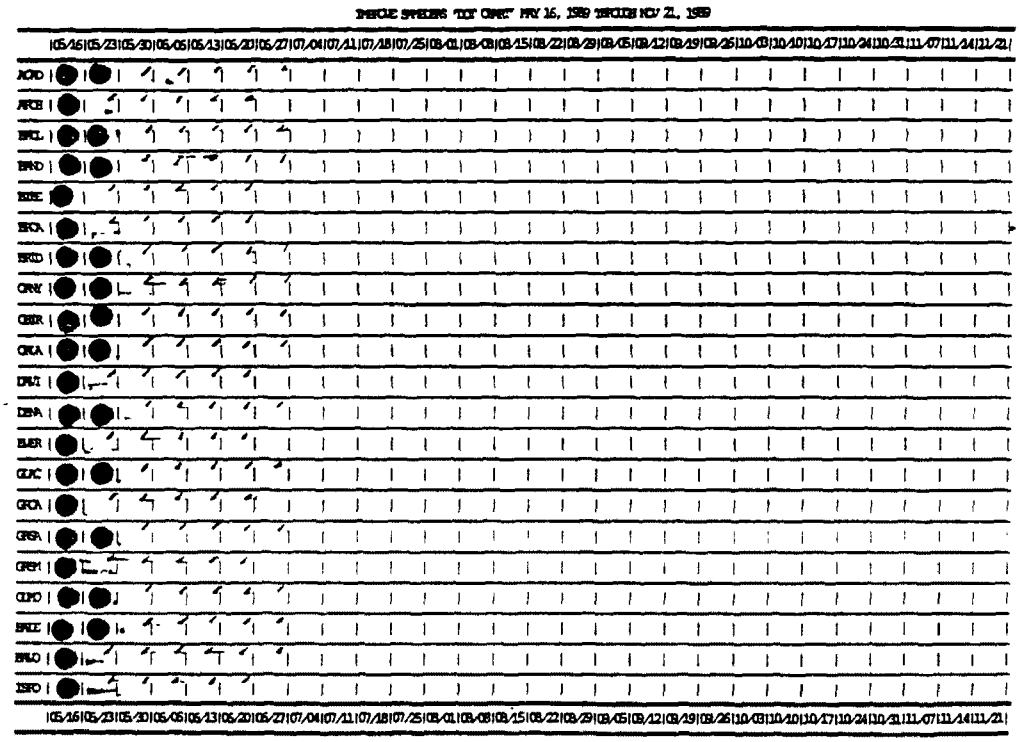

D. A-Preweight Logsheet--Record of data for module A filters, before collection.

PREWEIGHTS **PREWEIGHTS**

IMPROVE "A" FILTERS, MASKED

	Identification	Pre Weight	Pre Laser		Identification	Pre Weight	Pre Laser
1	TF 8501. M1	42.183	0.342	26	TF 8526. M1		0.471
2	TF 8502. M1	41.198	0.361	27	TF 8527. M1		0.440
3	TF 8503. M1	42.199	0.440	28	TF 8528. M1		0.417
4	TF 8504. M1	41.680	0.437	29	TF 8529. M1		0.451
5	TF 8505. M1		0.448	30	TF 8530. M1		0.408
6	TF 8506. M1		0.464	31	TF 8531. M1		0.407
7	TF 8507. M1		0.457	32	TF 8532. M1		0.393
8	TF 8508. M1		0.481	33	TF 8533. M1		0.466
9	TF 8509. M1		0.497	34	TF 8534. M1		0.370
10	TF 8510. M1		0.492	35	TF 8535. M1		0.378
11	TF 8511. M1		0.492	36	TF 8536. M1		0.405
12	TF 8512. M1		0.477	37	TF 8537. M1		0.365
13	TF 8513. M1		0.458	38	TF 8538. M1		0.444
14	TF 8514. M1		0.455	39	TF 8539. M1		0.403
15	TF 8515. M1		0.446	40	TF 8540. M1		0.438
16	TF 8516. M1		0.459	41	TF 8541. M1		0.424
17	TF 8517. M1		0.463	42	TF 8542. M1		0.419
18	TF 8518. M1		0.490	43	TF 8543. M1		0.431
19	TF 8519. M1		0.452	44	TF 8544. M1		0.451
20	TF 8520. M1		0.451	45	TF 8545. M1		0.422
21	TF 8521. M1		0.457	46	TF 8546. M1		0.440
22	TF 8522. M1		0.496	47	TF 8547. M1		0.441
23	TF 8523. M1		0.429	48	TF 8548. M1		0.440
24	TF 8524. M1		0.461	49	TF 8549. M1		0.416
25	TF 8525. M1		0.429	50	TF 8550. M1		0.388

D3974 (10/88)

date completed _____

E. D-Preweight Logsheet--Record of data for module D filters, before collection.

PREWEIGHTS **PREWEIGHTS**

IMPROVE "D" FILTERS, UNMASKED

Identification	Pre Weight	
1. TF 6151. U	41.713	
2. TF 6152 U	41.756	
3. TF 6153. U	42.377	
4 TF 6154. U	42.445	
5 TF 6155. U		
6. TF 6156. U		
7. TF 6157. U		
8. TF 6158. U		
9 TF 6159. U		
10 TF 6160. U		
11. TF 6161. U		
12. TF 6162. U		
13 TF 6163. U		
14 TF 6164. U		
15 TF 6165. U		
16 TF 6166. U		
17 TF 6167. U		
18. TF 6168. U		
19. TF 6169. U		
20 TF 6170. U		
21 TF 6171. U		
22 TF 6172. U		
23. TF 6173. U		
24 TF 6174. U		
25 TF 6175. U		

Identification	Pre Weight	
26. TF 6176. U		
27 TF 6177 U		
28. TF 6178. U		
29 TF 6179. U		
30 TF 6180. U		
31. TF 6181. U		
32. TF 6182. U		
33. TF 6183. U		
34. TF 6184. U		
35 TF 6185. U		
36 TF 6186. U		
37. TF 6187. U		
38. TF 6188. U		
39 TF 6189. U		
40 TF 6190. U		
41. TF 6191. U		
42 TF 6192. U		
43. TF 6193. U		
44. TF 6194. U		
45. TF 6195. U		
46 TF 6196. U		
47 TF 6197. U		
48 TF 6198. U		
49. TF 6199. U		
50 TF 6200. U		

D3827 (6/89)

date completed _____

F. Mailer Record Logcard--4"x6" card, record of date that each filter was shipped to sampling site.

BOX #	Channel Module Code	Teflon Filter ID	Quartz Filter Lot #	SO2 Filter Lot #
	A1			
	A2			
	B1			
	B2			
DATE OUT	C1			
	C2			
	D1			
	D2			
	S1			
	S2			

G. Field Logsheet--Record of data for sample change. The front side is for clean filters and the reverse side for exposed filters.

IMPROVE Sampler Particulate Sampling Network Field Log

Box number: _____

INITIAL READINGS (After inserting clean cassettes)

date changed: ___/___/___ time: _____ day: Sun Mon Tue Operator's Initials _____

	small gauge ("Hg)	magnehelic ("water)
Module A (RED)	_____	
Filter 1: (black)	_____	_____
Filter 2: (white)	_____	_____
Module B (YELLOW)	_____	
Filter 1: (black)	_____	_____
Filter 2: (white)	_____	_____
Module C (GREEN)	_____	
Filter 1: (black)	_____	_____
Filter 2: (white)	_____	_____
Module D (BLUE)	_____	
Filter 1: (black)	_____	_____
Filter 2: (white)	_____	_____

Comments on sampler problems:

IMPROVE Sampler Particulate Sampling Network Field Log

Box number: _____

FINAL READINGS (Before removing exposed cassettes)

date: ___/___/___ time: _____ day: Sun Mon Tue Initials Operators _____

current temperature: _____ °C minimum temperature: _____ °C maximum temperature: _____ °C

	small gauge ("Hg)	magnehelic ("water)	elapsed time (hours)
Module A (RED)	_____		
Filter 1: (black)	_____	_____	_____
Filter 2: (white)	_____	_____	_____
Module B (YELLOW)	_____		
Filter 1: (black)	_____	_____	_____
Filter 2: (white)	_____	_____	_____
Module C (GREEN)	_____		
Filter 1 (black)	_____	_____	_____
Filter 2: (white)	_____	_____	_____
Module D (BLUE)	_____		
Filter 1: (black)	_____	_____	_____
Filter 2: (white)	_____	_____	_____

Comments on sampler problems:

H. Mounted Samples Logsheet--Record of data for module A filters, after collection.

IMPROVE/CRITERIA MOUNTED SAMPLES

	SAMPLE ID	FILTER ID	POST WEIGHT	POST LASER
1	GLIMO 05.09.89 A2	TF7774.M1	42.046	
2	YELL 05.09.89 A2	TF7574.M1	42.678	
3	YELL 05.09.89 A1	TF7573.M1	41.792	
4	GRSM 05.09.89 A2	TF7764.M1	39.566	
5				
6				
7				
8				
9				
10				
11				
12				
13				
14				
15				
16				
17				
18				
19				
20				
21				
22				
23				
24				
25				
26				
27				
28				
29				
30				
31				
32				
33				
34				
35				
36				
37				
38				
39.				
40.				

D-002 (11/88)

SLIDE TRAY ID I-160

I. PM10 Archive Logsheet--Record of data for module D filters, after collection. Accompanies each box of 50 filters in PM10 Archives.

IMPROVE/CRITERIA ARCHIVED PM_{10} SAMPLES

	SAMPLE ID	FILTER ID	POST WEIGHT		SAMPLE ID	FILTER ID	POST WEIGHT
1.	PORE 05.09.89 D2	TF 5716.U	42.201	26.			
2.	SAGU 05.16.89 D1	TF 5670.U	41.564	27.			
3.	WASH 05.16.89 D2	TF 5704.U	43.072	28.			
4.	WASH 05.16.89 D1	TF 5703.U	43.447	29.			
5.				30.			
6.				31.			
7.				32.			
8.				33.			
9.				34.			
10.				35.			
11.				36.			
12.				37.			
13.				38.			
14.				39.			
15.				40.			
16.				41.			
17.				42.			
18.				43.			
19.				44.			
20.				45.			
21.				46.			
22.				47.			
23.				48.			
24.				49.			
25.				50.			

ARCHIVE BOX ID D-110

J. External Contractor Inventory--Sample identification numbers of all exposed filters sent to the Desert Research Institute or to the Research Triangle Institute for analysis. Accompanies each box of 50 filters in shipment.

Date 5.23.89

IMPROVE

FILTER INVENTORY FOR EXTERNAL ANALYSIS BY DRI-carbon

	Filter Identification Site	Date	Channel		Filter Identification Site	Date	Channel
1.	SAGU	05.09.89	C1F	26.			
2.	BAND	05.09.89	C2S	27.			
3.	YOSE	05.16.89	C1S	28.			
4.	YOSE	05.16.89	C1P	29.			
5.				30.			
6.				31.			
7.				32.			
8.				33.			
9.				34.			
10.				35.			
11.				36.			
12.				37.			
13.				38			
14.				39.			
15.				40.			
16.				41.			
17.				42.			
18.				43.			
19.				44.			
20.				45.			
21.				46.			
22.				47.			
23.				48.			
24.				49.			
25.				50.			

Inventoried by _____ initials _____ date

K. Unusable Archive Inventory--Record of sample identification numbers with problem code for samples that are damaged or otherwise invalid. Accompanies each box of 50 filters in archive.

ARCHIVE OF UN-USABLE IMPROVE/CRITERIA SAMPLES

	IDENTIFICATION	FILTER ID	PROBLEM CODE		IDENTIFICATION	FILTER ID	PROBLEM CODE
1	SUMO 04.11.89 A3	TF 7309.M1	XX	26			
2	TONT 04.18.89 A1	TF 7457.M1	PF	27			
3.	CELA 04.18.89 B1	—	XX	28			
4	YELL 04.25.89 D1	TF 5313.U	DB	29.			
5.				30.			
6.				31.			
7.				32			
8				33			
9.				34			
10.				35			
11.				36.			
12.				37			
13.				38			
14				39.			
15.				40			
16				41.			
17.				42.			
18.				43.			
19.				44.			
20				45			
21				46.			
22.				47			
23				48			
24.				49.			
25				50			

D3974 (10/88)

ARCHIVE # P-012

IMPROVE Sampler Manual

Version 2
January 1988

Robert A. Eldred
Air Quality Group, Crocker Nuclear Laboratory
University of California, Davis CA 95616

Table of Contents

1. Overview 3

2. General Description of the Sampler 6

3. Site Location 9
   3.1 Site Selection Criteria 9
   3.2 Power Requirements 9

4. Sample Changing Procedures 10
   4.1 General Description 10
   4.2 Details of Sample Change 12
   4.3 Trouble Shooting 16

5. Control Module 18
   5.1 General Description 18
   5.2 Operating the Time Clock 18
   5.3 Programing the Time Clock 19
   5.4 Electrical Circuitry 21

6. Filter Module 23
   6.1 General Description 23
   6.2 Flow Rate Measurement 24
   6.3 Flow Rate Audit 26
   6.4 Flow Rate Calibration 28
   6.5 Electrical Circuitry 32
   6.6 Nitrate Denuder 33

7. Pump House 34
   7.1 General Description 34
   7.2 Pump Specifications 34
   7.3 Electrical Circuitry 35

8. Sampler Stand 37

9. Acknowledgments 39

Improve Sampler Manual
Version 2
January 1988

List of Table and Figures

Table 1. List of IMPROVE and NPS Criteria sampling sites 4
Table 2. Density factor at IMPROVE sites 30
Table 3. Density factor vs. altitude 30

Figure 1. Map of IMPROVE and NPS Criteria sampling sites 4
Figure 2. Layout of IMPROVE sampler, without pump house 7
Figure 3. IMPROVE sampler field log 11
Figure 4. Reading the min/max thermometer 13
Figure 5. Layout of fine filter module 14
Figure 6. Layout of PM10 filter module 15
Figure 7. Electronic time clock with cover plate removed 18
Figure 8. Time clock programs for standard IMPROVE cycle 20
Figure 9. Electrical schematic for control module 22
Figure 10. 50% cutpoint for cyclone vs. flow rate 23
Figure 11. Flow rate audit log 27
Figure 12. Flow rate calibration log 29
Figure 13. Electrical schematic for filter module 32
Figure 14. Nitrate denuder 33
Figure 15. Layout of wall of pump house 34
Figure 16. Electrical schematic for pump house 35
Figure 17. Electrical schematic for relay box 36
Figure 18. Outdoor stand for IMPROVE sampler 38

1. OVERVIEW

Fine aerosol particles affect remote areas primarily by impairing visibility and secondarily by producing acid precipitation. These fine particles are generally manmade, although some are produced by smoke and windblown dust. (Most naturally produced particles are coarse and have a smaller effect on visibility and acid rain.) In the case of sulfur, fine sulfate particles are produced by the transformation of sulfur dioxide gas in the atmosphere. Measurements of the concentration and composition of these fine particles are necessary to determine the extent of the problem and possible sources of the particles.

The National Park Service and the Environmental Protection Agency have been monitoring particulate concentrations at national parks, monuments, forests, wildlife refuges and other remote sites since 1979 using stacked filter samplers. Coarse particles are collected on nuclepore filters and fine particles on teflon filters. The coarse filters are analyzed for mass, while the fine particles are analyzed for mass, optical absorption, hydrogen and elements Na to Pb, including sulfur and the soil elements. From the measured data we can calculate the concentration of organic particles.

The particulate monitoring program has been expanded to include other federal agencies with the establishment of the IMPROVE (Interagency Monitoring of PROtected Visual Environments) program, designed to determine the extent and causes of visibility impairment at selected class I areas throughout the United States. The National Park Service maintains additional sampling sites through the NPS Criteria Pollutant Monitoring program. The two programs use the same sampler and nearly identical sampling protocols and are operated by the Air Quality Group of Crocker Nuclear Laboratory at the University of California at Davis. The sites selected as of October 1987 are shown in Figure 1 and listed in Table 1.

A new sampler was designed for these networks called the IMPROVE Modular Aerosol Monitoring Sampler that collects three samples of fine particles (smaller than 2.5 μm) and one of respirable particles (smaller than 10 μm). At the NPS Criteria Pollutant Monitoring sites, a fifth filter measures gaseous SO_2. The entire unit is modular, with four filter modules, a controller module and a pump house containing four pumps. The modules are mounted either on an outdoor wood stand or on a wall of an air quality building. The IMPROVE sampler retains the simplicity of the stacked filter sampler but adds several features, including additional filters for measuring nitrates and carbon, twice the flow rate to improve sensitivity, an improved flow rate measurement system, and fewer sample changes.

The samplers require a weekly change of filter cassettes by field personnel provided by the cooperating federal agencies. Each site receives from Davis a weekly box of 8 filter cassettes and a log sheet. After the filter change, the 8 cassettes of exposed filters are returned to Davis for analysis.

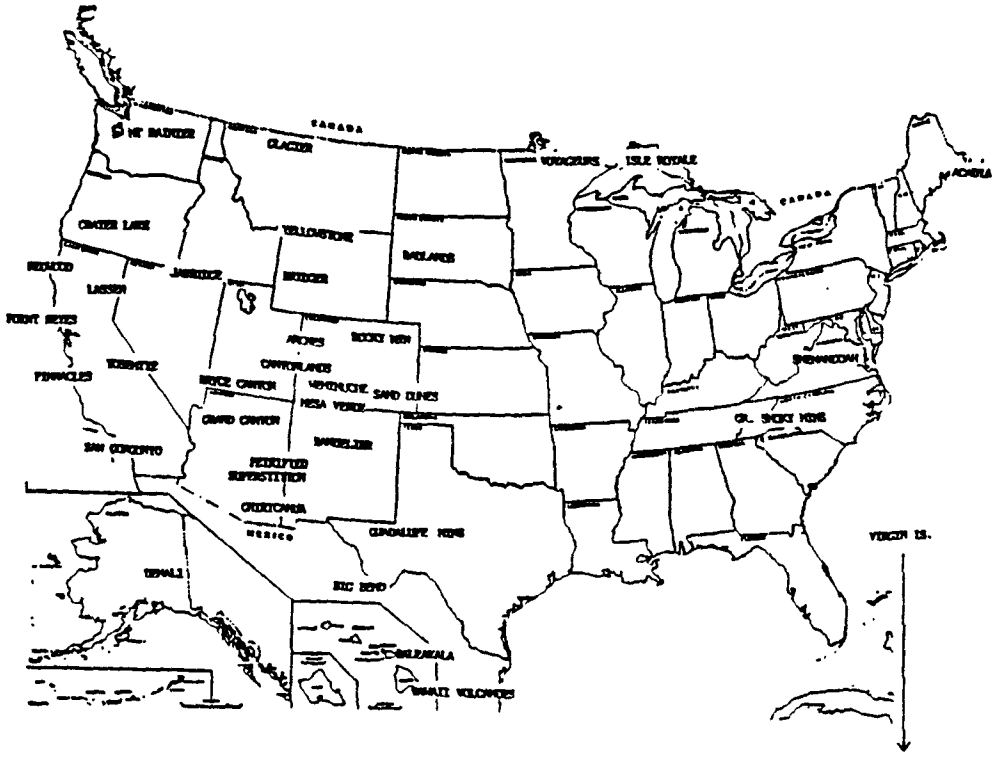

Figure 1. Map of IMPROVE and NPS Criteria Sites

Table 1: List of IMPROVE and NPS Criteria Sites

IMPROVE Network	NPS Criteria Network
ACADIA National Park	ARCHES National Park
BIG BEND National Park	BADLANDS National Park
BRIDGER Wilderness	BANDELIER National Monument
BRYCE CANYON National Park	GREAT SAND DUNES National Monument
CANYONLANDS National Park	GUADALUPE MOUNTAINS National Park
CHIRICAHUA National Monument	HALEAKALA National Park
CRATER LAKE National Park	HAWAII VOLCANOES National Park
DENALI National Park and Preserve*	ISLE ROYALE National Park
GLACIER National Park*	LASSEN VOLCANIC National Park
GRAND CANYON National Park	PETRIFIED FOREST National Park
GREAT SMOKY MOUNTAINS National Park	PINNACLES National Monument
JARBIDGE Wilderness	POINT REYES National Seashore
MESA VERDE National Park	REDWOOD National Park
MOUNT RAINIER National Park	VIRGIN ISLANDS National Park
ROCKY MOUNTAIN National Park	VOYAGEURS National Park
SAN GORGONIO Wilderness	YELLOWSTONE National Park
SHENANDOAH National Park	
SUPERSTITION Wilderness	
WEMINUCHE Wilderness	
YOSEMITE National Park	* Also an NPS Criteria Site

In order to obtain a complete signature of the composition of the particles, a variety of analytical methods are used.

A	fine teflon filter —	gravimetric analysis (mass) laser integrating plate (optical absorption) Particle Induced X-ray Emission (Na to Pb) Proton Elastic Scattering (hydrogen) Forward Alpha Scattering (H, C, N and O)
B	fine nylon filter —	ion chromatography (nitrate)
C	fine quartz filter —	combustion analyzer (organic carbon and elemental carbon)
D	respirable particle teflon filter —	gravimetric analysis (mass)
S	impregnated quartz filter —	ion chromatography (SO_2)

Filters A and D are analyzed by the Air Quality Group at Davis
Filter B is analyzed by Research Triangle Institute
Filters C and S are analyzed by Desert Research Institute

The analytical results are included in 3-month seasonal summaries, which are distributed to the cooperating agencies and to the local sites. In addition, interpretative studies are performed by the participating contractors, the cooperating agencies and by other research groups. The data are available to local resource managers on a variety of media.

2. GENERAL DESCRIPTION OF THE SAMPLER

The IMPROVE modular aerosol monitoring sampler was designed and built by the Air Quality Group at Davis specifically for the IMPROVE program. The following design criteria were followed:

—Accuracy and precision in particulate collection including air volumes, particle size cuts and time intervals.

—Reliability and ruggedness under extreme environmental conditions, without requiring air conditioned shelters.

—Ease of siting and operation, with protocols to eliminate potential field errors and to minimize the time demands on the field personnel.

—Flexibility in terms of present and future sampling requirements, with ability to increase or decrease the number of simultaneous samples and to match the system sensitivity to the specific site.

—Attractive and professional appearance, to permit inclusion in public displays, if desired.

—Reasonable costs.

The sampler is composed of six modular units: a control module, four filter modules and a pump house, as shown in Figure 2. The control and filter modules are all contained in identical gray fiberglass enclosures, 20 inches high by 17 inches wide by 11 inches deep. These are mounted either outdoors on a wood stand with sunshield and work table, or on the walls of an air quality building. The aluminum pump house measuring 3 feet wide by 2 feet deep by 4 feet high will contain four pumps, a cooling fan and two heaters. The hoses and wires are enclosed in teflon coated metal conduit.

The control module contains a 7-day, 4-channel electronic time clock, a 30-minute bypass timer for sample changing plus appropriate relays. The module has a cooling fan that turns on at 85°F and a heater that turns on at 20°F.

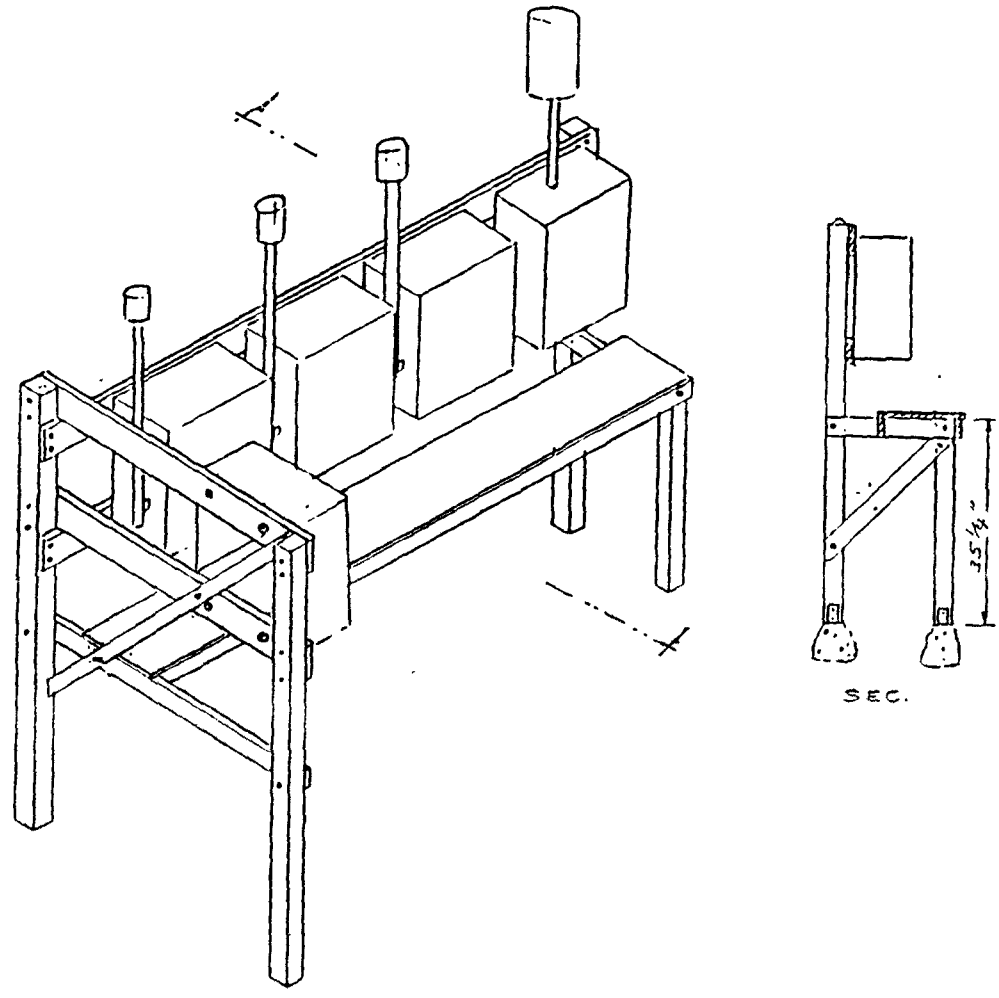

Figure 2. Layout of IMPROVE modular Aerosol Monitoring Sampler, without pumphouse

---

The three fine particle filter modules are almost identical. The inlet protects against rain and eliminates bugs and particles larger than around 15 μm. One of the units has a nitrate denuder to remove gaseous oxides of nitrogen from the air. The air passes through identical cyclones, designed to remove particles larger than 2.5 μm at a flow rate of 21.7 l/min. The airstream passes through a filter, which collects all the fine particles. In the standard configuration, each module contains two solenoids and two elapsed time indicators to handle two filter cassettes. The unit is designed to be able to accomodate up to four cassettes by adding additional solenoids and elapsed time indicators. Each unit also contains two gauges to measure the flow rate and two toggle switches for use during sample changing. Each module is connected to its own pump in the pump house.

The PM10 module differs from the fine modules in that the fine inlet and cyclone are replaced by a commercial PM10 inlet similar to those used for standard dichotomous samplers (virtual impactors), but designed to operate at 18.9 l/min. All particles smaller than 10 μm are collected on the filter. The filter cassettes are mounted vertically up rather than down as in the fine modules.

The flow rate of 21.7 or 18.9 l/min is regulated by a critical orifice calibrated for the intended filter medium. The flow rate is measured before and after the collection by two independent methods. The first measures the pressure drop across the filter and uses the equation for flow rate through a critical orifice. The second method calculates the flow rate by measuring the pressure drop across a fixed orifice.

The filters are transported and installed in cassettes; the filters are handled only under controlled laboratory conditions. This is essential in maintaining quality control and in simplifying field protocols. The nitrate module uses 47mm cassettes while the others use 25mm cassettes. The active area of the sample collection on the fine teflon is reduced from 3.8 mm to 2.2 cm by using masks in the cassette behind the filter, in order to improve the analytical minimum detectable limit for elemental analysis . The use of cassettes permits adding extra filters to the system without revising the field protocols. For example, at some sites, the PM10 filter will be followed by an impregnated quartz filter to capture gaseous SO_2. The following filter media are to be used in the standard system, along with the corresponding analytical measurements:

module A	25mm teflon	fine	mass, absorption, elemental (H, Na-Pb)
module B	47mm nylasorb	fine	nitrate
module C	25mm quartz	fine	organic and elemental carbon
module D	25mm teflon	PM10	mass

3. SITE LOCATION

3.1 Site Selection Criteria

The specific sampling site should be selected with the following criteria:

—The site must be away from local combustion sources, such as diesel generators, automobiles, chimneys, and dumps.

—The site must not have obstructions that would hinder sampling representative aerosols, such as trees or buildings.

—The site should not be located in small valleys subject to nonregional conditions.

—The site must have 25A of current at 120V.

—The site must be accessible for filter changes in all weather conditions.

—The site should be located near existing particulate monitoring stations in order to provide continuity.

3.2 Power Requirements

The maximum current for the standard system is 23 amps and lasts for a few seconds during the startup of the pumps. The normal current with the pumps in operation is 14 amps. The heater in the controller module adds 0.7 amps and a 60W lamp in the pumphouse adds 0.5 amps. The annual energy consumption is 4,000 kWh.

4. SAMPLE CHANGING PROCEDURES

4.1 General Description

This section summarizes the protocols to be followed for the weekly sample change. Section 4.2 will provide more details on the procedures and section 4.3 will discuss trouble shooting. The instructions are posted inside the doors of the control module, module A and module D. You will need last week's shipping box to put in the cassettes currently in the sampler and this week's shipping box with the new cassettes.

The filters are to be changed once a week, either on Sunday, Monday or Tuesday. Because of other air quality instruments, most operators will make the change on Tuesday. The shipping boxes containing the clean filters will be identified by the date for Tuesday. The box should be received 1 to 2 weeks before the specified date. A receipt log is provided to document the receipt of these boxes. If the box is not present at the time it is to be used, please call Davis to discuss procedures. We will have you use another box if available. In any case, you must remove the exposed cassettes before Wednesday: if any filter is run for two periods it will be invalid. You will need to have at the site the empty shipping box for the exposed filters in the sampler and the full shipping box with clean filters.

Inside the shipping box will be eight cassettes and a log sheet. Each cassette will be identified by both colored tape and a coded label. The two systems are redundant; if you follow the colored tape you can ignore the code. If "date" is the Tuesday date on the shipping box, the cassettes will be as follows:

MODULE	FILTER	COLORED TAPES	LABEL	DESCRIPTION
A	1	red, black	date-A1	single 25mm cassette
A	2	red, white	date-A2	(teflon)
B	1	yellow, black	date-B1	single 47mm cassette
B	2	yellow, white	date-B2	(nylasorb)
C	1	green, black	date-C1	double 25mm cassette
C	2	green, white	date-C2	(quartz)
D	1	blue, black	date-D1	single 25mm cassette
D	2	blue, white	date-D2	(teflon)*

*If SO_2 is to be measured at NPS Criteria Pollutant Monitoring site, the D filter will be a double 25mm cassette.

The log sheet is two-sided, with the initial data on one side and the final data on the other. These are shown in Figure 3. The initial data is to be entered after inserting the clean filters. The final data is to be entered the following week before removing the exposed filters. The log sheets correspond to the 8 cassettes in the shipping box. The log sheets must remain with the shipping box.

IMPROVE Sampler Particulate Sampling Network Field Log

Box number: _____

INITIAL READINGS (After inserting clean cassettes)

date changed: __/__/__ time: _____ day: Sun Mon Tue Operator's Initials _____

	small gauge (" Hg)	magnehelic (" water)
Module A (RED)	_____	
Filter 1: (black)	_____	_____
Filter 2: (white)	_____	_____
Module B (YELLOW)	_____	
Filter 1: (black)	_____	_____
Filter 2: (white)	_____	_____
Module C (GREEN)	_____	
Filter 1: (black)	_____	_____
Filter 2: (white)	_____	_____
Module D (BLUE)	_____	
Filter 1: (black)	_____	_____
Filter 2: (white)	_____	_____

Comments on sampler problems:

IMPROVE Sampler Particulate Sampling Network Field Log

Box number: _____

FINAL READINGS (Before removing exposed cassettes)

date: __/__/__ time: _____ day: Sun Mon Tue Initials _____ Operators

current temperature: _____ °C minimum temperature: _____ °C maximum temperature: _____ °C

	small gauge (" Hg)	magnehelic (" water)	elapsed time (hours)
Module A (RED)	_____		
Filter 1: (black)	_____	_____	_____
Filter 2: (white)	_____	_____	_____
Module B (YELLOW)	_____		
Filter 1: (black)	_____	_____	_____
Filter 2: (white)	_____	_____	_____
Module C (GREEN)	_____		
Filter 1: (black)	_____	_____	_____
Filter 2: (white)	_____	_____	_____
Module D (BLUE)	_____		
Filter 1: (black)	_____	_____	_____
Filter 2: (white)	_____	_____	_____

Comments on sampler problems:

Figure 3. IMPROVE sampler field log.

The protocols to be followed at the sampler for the weekly sample change involve 5 steps.

step 1: Record the following on the reverse side of last week's log sheet: date; current, min and max temperatures; your initials; and any comments on sampler problems, construction near sampler, etc.

step 2: Check the time and date on the controller clock and turn timer to 30 minutes.

step 3: For each module (A,B,C,D) record 5 gauge readings and 2 elapsed times.

step 4: For each module (A,B,C,D) remove the exposed cassettes, placing in last week's shipping box along with the log sheet.

step 5: Get the cassettes and the log sheet in this week's shipping box. For each module (A,B,C,D) insert the new cassettes, matching colored tapes (A=red, B=yellow, C=green, D=blue; black on left, white on right).

step 6: For each module (A,B,C,D) record 5 gauge readings.

4.2 Details of Sample Change

This section provides more details on the five steps in the sample change.

step 1: Remove the log sheet from last week's shipping box. The front side should have been filled in the previous week. On the reverse side, record the present date and time and your initials. Record the current temperature, the minimum temperature (since the last change) and the maximum temperature on the min/max thermometer. Figure 4 shows how to read the thermometer. Use the Celsius scale. Press the reset button until the min/max indicators drop to the mercury. (The three temperatures are needed for precise flow rate measurements.)

step 2: Open the control module. Verify the time of the time clock. Turn the bypass timer to 30 minutes. This switch turns on the four pumps, and disconnects the auto control of the solenoids. Thus the solenoids will all be closed.

If the change takes longer than 30 minutes, you must reset the switch. It is best to do this before the 30 minutes expires. If the pumps turn off while there is a good vacuum behind the solenoids and if the solenoids are closed, the pumps will generally not restart. Therefore if the bypass timer turns off, briefly open one toggle switch in each module to destroy the vacuum, before restarting the timer.

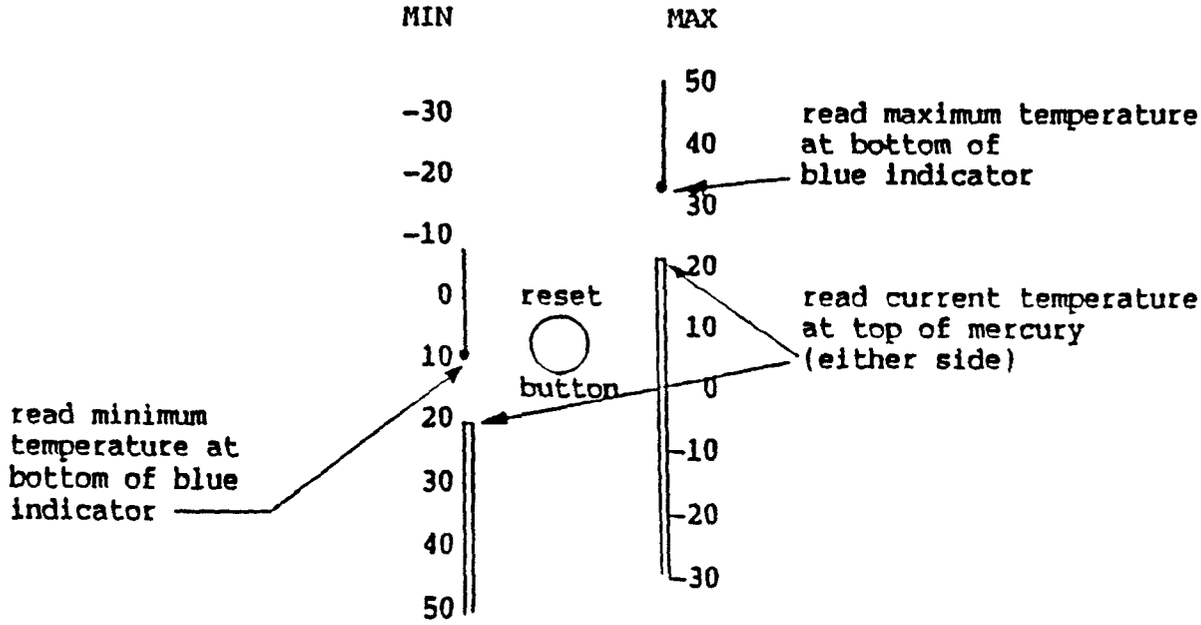

Figure 4. Reading the min/max thermometer. Note that the left side increases as one reads down. Use bottom of blue indicators to read minimum (left side) and maximum (right side) and top of mercury to read current temperature. When finished recording values, hold down reset button until both blue indicators drop to mercury.

---

step 3: For each module (A, B, C, D) in turn, do the following. Layouts of the fine and PM10 modules are shown in Figures 5 and 6.

a. Before pressing either filter switch, record the small gauge. This should be 15 to 25 "Hg (depending on the elevation) and indicates the pump is working properly. If it drops below the indicated yellow line, look for leaks in hose and hardware between the solenoid and pump and call Davis.
b. Press the filter 1 toggle switch and record the small gauge and the magnehelic gauge. The insert in Figure 5 shows how to read the small gauge below 5 "Hg. Section 4.3 discusses the significance of the gauge readings and how to use them for troubleshooting.
c. Repeat substep b for filter 2.
d. Record both elapsed times (in hundredths of hours). Times of 24.00 hours are expected. Zero both elapsed timers. In extreme cold the reset buttons may not operate easily. In this case it will be necessary to keep a running total and determine the durations by subtraction.

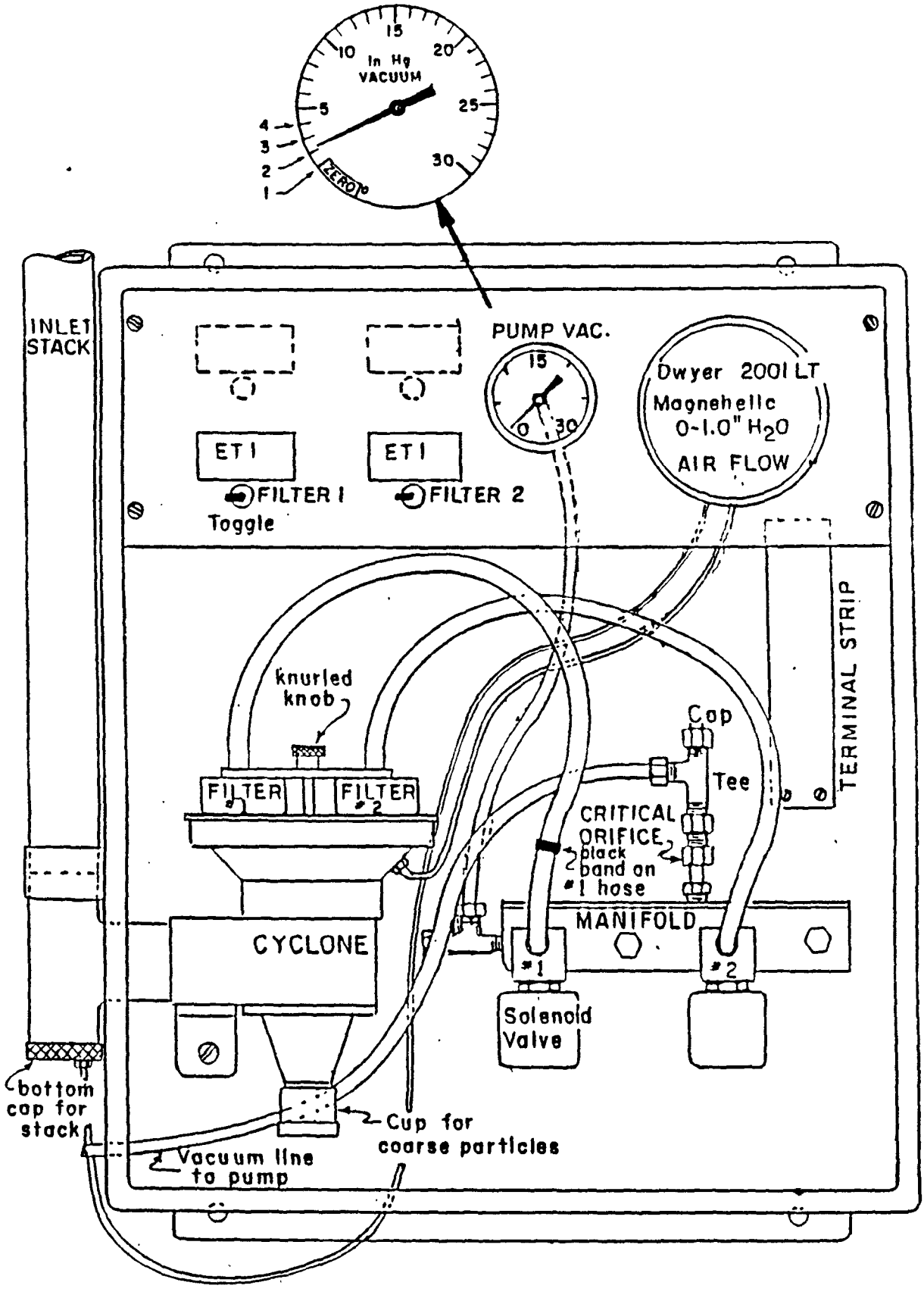

Figure 5. Layout of fine filter module

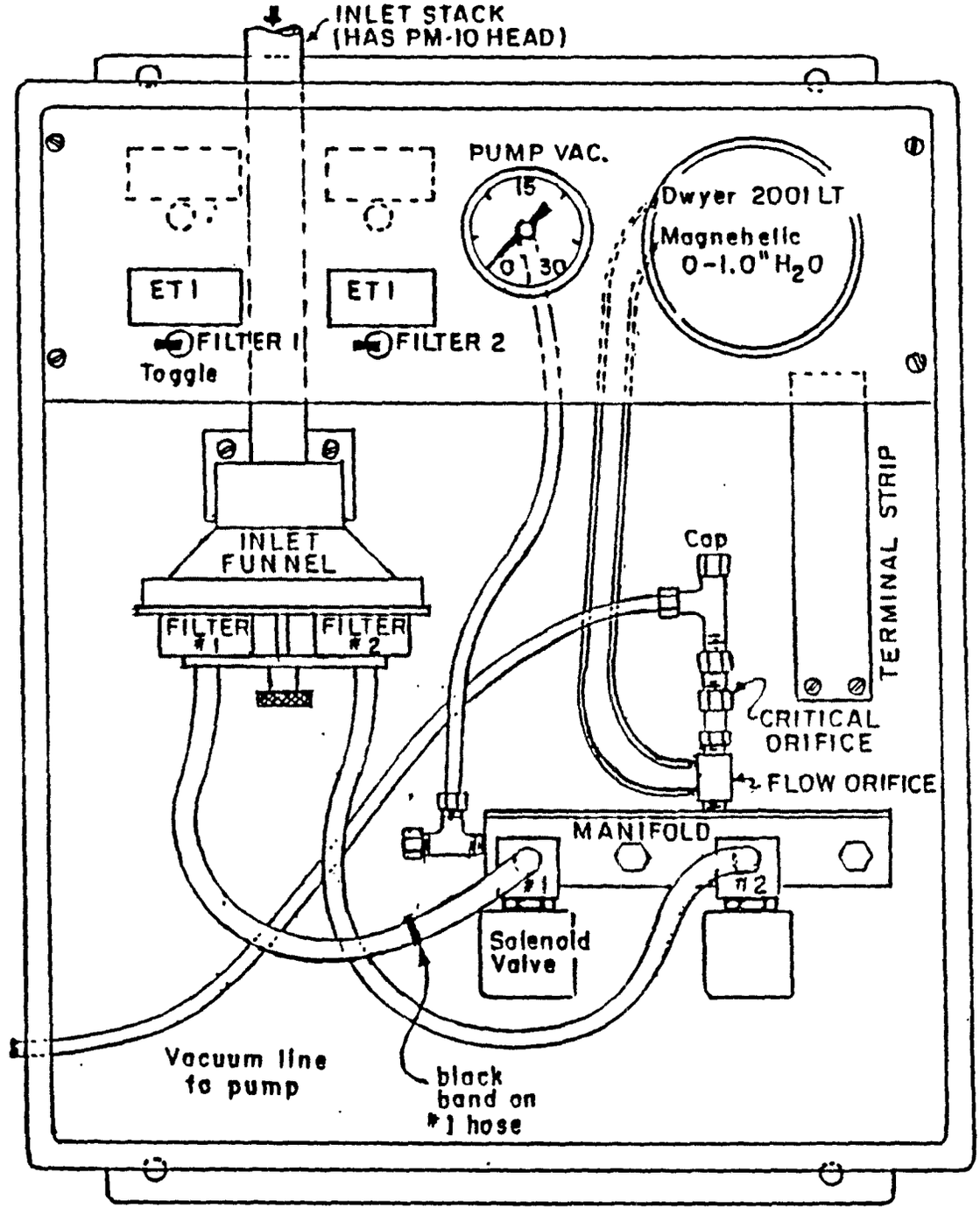

Figure 6. Layout of PM10 filter module

step 4: Remove each cassette by first unscrewing the hose from the solenoid. Then unscrew the knurled knob holding the cassette enough to lift the support bracket and remove the cassette. Do not remove the knob completely. Put the red cap on the cassette and place it in last week's shipping container. When finished with module D, place the completed logsheet in also.

step 5: Remove the blank log sheet from this week's shipping box. Check the date on the box and on the log sheet. If this is not the proper date for the current week, make a large note on the log sheet. (Also call Davis.) Fill in current date and time and your initials. If this is change does not follow the removal of the exposed cassettes, record the current temperature. Insert the cassettes for each module in turn, selecting the two cassettes for the module: red for A, yellow for B, green for C, and blue for D.. Remove the red cap from the black (filter 1) cassette, insert the cassette into the left side of the manifold (under the clamp) and attach the hose and nut onto the left (filter 1, black) solenoid. Place the red cap in the empty shipping box. Repeat for the cassette marked with white tape (filter 2) inserting on right side of manifold and right solenoid. Hand tighten the nuts on the hoses. Do not use a wrench or pliers to tighten. Make certain both cassettes are firmly mounted on the manifold and tighten the knurled knob.

step 6: Record gauges for each module in turn, in the same way as with the exposed filters:

a. Before pressing the toggle switches record the small gauge.
b. Press the filter 1 toggle switch and record both gauges.
c. Press the filter 2 toggle switch and record both gauges.
d. Check that elapsed timers were reset. If the elapsed timer will not reset because of cold, record the initial time on the right side oth the log sheet.

You could turn off the bypass timer, although it will automatically turn off after the 30 minutes have elapsed.

4.3 Trouble Shooting

This section discusses how to interpret the readings of the two gauges when a solenoid is open. The gauges provide two independent measurements of the flow rate. The equations are given in section 9. The magnehelic measures the pressure drop across the cyclone or a large orifice; as the flow rate decreases, the magnehelic reading will also decrease. The small gauge gives the pressure drop across the filter; an increase in this pressure drop (due to loading of the filter or a nonstandard filter) will cause the flow rate to decrease.

If the needles of both gauges are on the green line, then the sampler is operating at the standard flow rate. If there are no leaks in the system and the only problem is a nonstandard drop across the filter, the two gauges will shift in the opposite direction. For example, a heavily loaded filter would cause the small gauge to increase and the magnehelic to decrease. As long as the needles are within the red lines, the flow rate is acceptable (10%).

Several problems in the vacuum system can be quickly seen by comparing the two gauge readings. Note that the fine modules (A, B, C) differ from module D.

1. The cassette or cassette plug is not placed firmly on the cassette manifold. (The plug is a problem for module B.) Modules ABC: the small gauge will read in the acceptable range, but the magnehelic will read low. In module D, the gauges will not indicate when the cassette is not seated firmly, so special care must be taken.
2. The hose is not be connected properly to the solenoid. Modules ABC: both the magnehelic and the small gauge for one filter will read low. Module D: the magnehelic will be acceptable, but the small gauge will read low.
3. Foreign matter is blocking the critical orifice. Modules ABC and module D: both the magnehelic and the small gauge for both filters will read low. Call Davis for instructions.
4. Module B only. The denuder has slipped and is partially blocking the inlet. The magnehelic will read high. Call Davis for instructions.

The following table summarizes the possible errors:

module	vac gauge	magnehelic	possible problem
ABC	normal	low	cassette or plug not seated
ABC	low	low	hose not connected properly at solenoid
			critical orifice clogged *
			leak between solenoid and pump **
B	normal	high	denuder in inlet has dropped
D	low	normal	hose not connected properly at solenoid
D	low	low	critical orifice clogged *
			leak between solenoid and pump **

* should occur for both filters in module
** the vac gauge will also be lower than normal with both soleniods closed—should occur for both filters in module

5. CONTROL MODULE

5.1 General Description

The control module consists of a 4-channel 7-day time clock, a 30-minute bypass timer, five control relays, a fan with thermal switch set for 85°F, a heater with thermal switch set for 20°F, three time delay relays, a 200 VA transformer and a terminal strip. The electrical circuit is discussed in section 8. The time clock is discussed in section 5.

The time delay relays and thermal switches are located under the blue panel. The time delay can be adjusted using the DIP switches. The thermal switch can be adjusted by removing the small cap on the front of the switch and rotating the set screw.

5.2 Operating the Time Clock

The time clock in the control module operates the pumps and the filter solenoids. Each of the four channels is independently programmable on a weekly cycle. The clock has 4 to 7 day battery backup; if this is exceeded so that the clock is either blank or always reads 12:00 AM, the time and memory will have to be reset. The clock has a specified operating range of -4° to +122°F. Figure 7 shows the clock face and the program buttons. These buttons are normally covered by a plate.

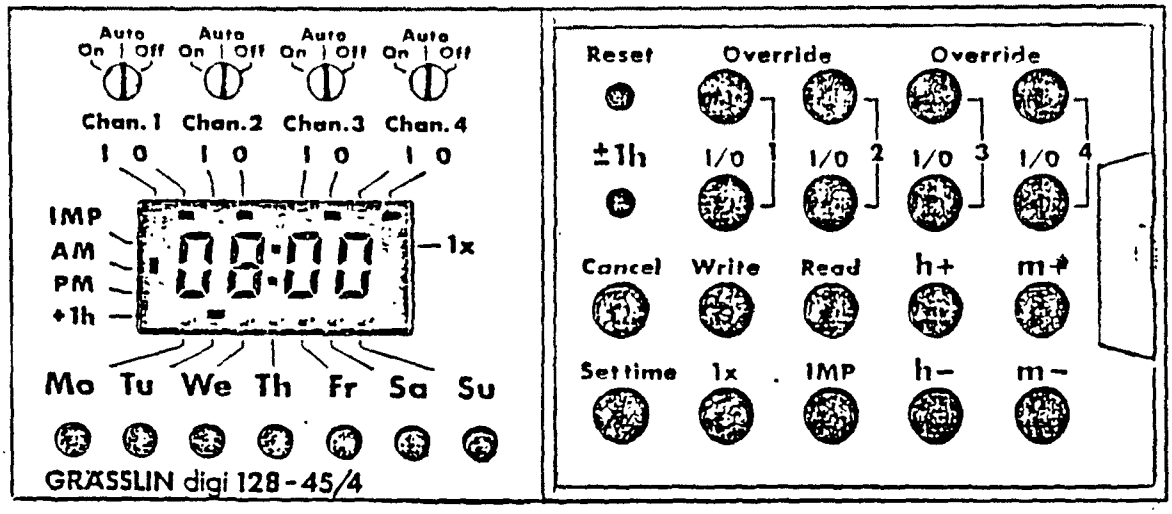

Figure 7. Time clock with cover plate removed, showing clock face and program buttons. The status shown is Tuesday, 8:00 AM with all four channels off.

The clock uses 12-hour notation, with the hour and minute indicated directly and the AM/PM shown by a black rectangle at the left.

The day of the week is indicated by a black rectangle on the bottom.

The status of each of the four output channels is indicated by black rectangles at the top, with I=in (on) and O=out (off). When a channel n is on, the solenoid for filter n is open and a sample is being collected for all four modules.

IPM, ±1h and 1x are not used and should have no black rectangles. The four screwqs at the top should all be set to auto.

To set or adjust the time of the clock, the "set time" button must be held down while pressing one or more other buttons. To set the time, it is necessary to difine: the day of the week, the hour (using the "h+" and "h-" buttons) and the minute (using the "m+" and "m-"). Be sure the AM/PM setting is correct. To adjust the minutes, hold down the "set time" button and press the "m+" or "m-" button. To adjust for daylight savings time, hold down the "set time" button and press the "h+" button in spring (beginning daylight savings) and "h-" button in fall (end of daylight savings).

5.3 Programming the Clock

Each program consists of the following three elements:

1. 1 to 7 days
2. time of day
3. on/off command for 1 to 4 channels (open/close solenoids 1 to 4)

To enter a program, enter the above 3 elements, and then press the "write" button. Continue until all programs have been entered. If you hesitate longer than 15 seconds between button-pushing, the clock reverts back to the time output mode and the program is not entered. To turn a channel on, press the I/O button once. To turn a channel off, press the I/O button twice. Every command is registered immediately with a black rectangle or as hour:minute.
For the standard IMPROVE network, four programs must be entered, as shown in Figure 8. For a typical entry press the day, "h+" once, "m+" once and the appropriate channel I/O either once or twice. Note that channels 3 and 4 are unused. The order of programs does not matter. An additional program can be entered at any time.
You may cancel a program completely or modify one or more elements. Press the "read" button until the desired program is reached. To cancel completely, press "cancel". To change one or more elements, press the appropriate buttons and then press "write".

The override buttons at the top can be used to reverse the status of any channel (on to off, off to on). This continues in effect until cancelled by another override or by being reset at the next program time.
The override buttons may be used during installation when calibrating the magnehelic. For example, pressing the "override" button for channel 1 will turn on the pumps and open all solenoids number 1.
The override button may also be used if the programs are entered after a desired change. Suppose a program was entered at 8:10 that was to have activated channel 1 at 8:00. Since the clock checks only for programs for the present minute, channel 1 will not turn on. By pressing the override button it will then turn on. It will turn off at the programmed time.

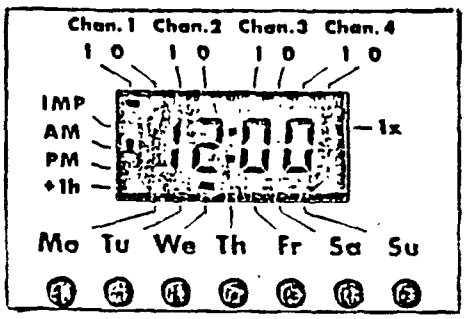

program 1: Wed, 12:00 AM, 1 on

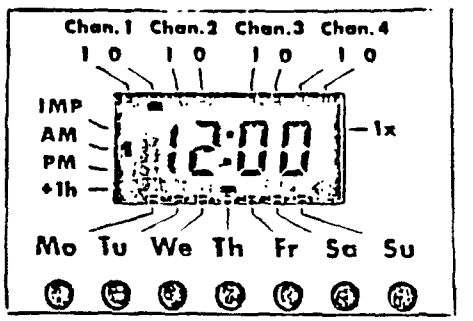

program 2: Thu, 12:00 AM, 1 off

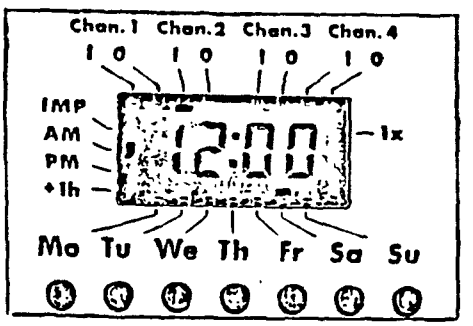

program 3: Sat, 12:00 AM, 2 on

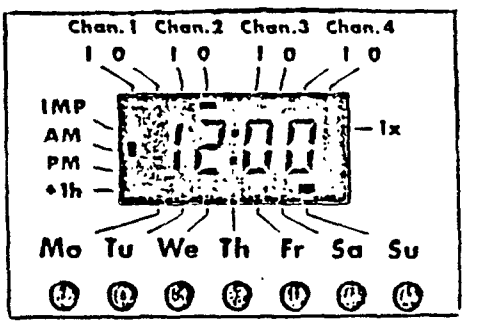

program 4: Sun, 12:00 AM, 2 off

Figure 8. Clock face for four standard programs

5.4 Electrical Circuitry

The electrical schematic for the control module is shown in Figure 9. The four outputs from the time clock (TC-1 to TC-4) each go to a relay. One output from each relay goes to a terminal which is then connected to a solenoid and an elapsed time indicator in each filter module. A second terminal from each relay goes to all of the pumps. Thus when any clock output goes on then all pumps are turned on.

The 30-minute bypass timer goes to a fifth relay. When this goes on, all clock outputs are disconnected so that all solenoids will be closed. A second output from the bypass relay turns on all pumps.

Three of the four pumps have time delay relays (TDR) to produce a small delay between startups to prevent overload at sites where power is marginal.

The numbers in square indicate the terminal number. The colors refer to the wires on the six wire cables between control and filter modules and between control module and pump house.

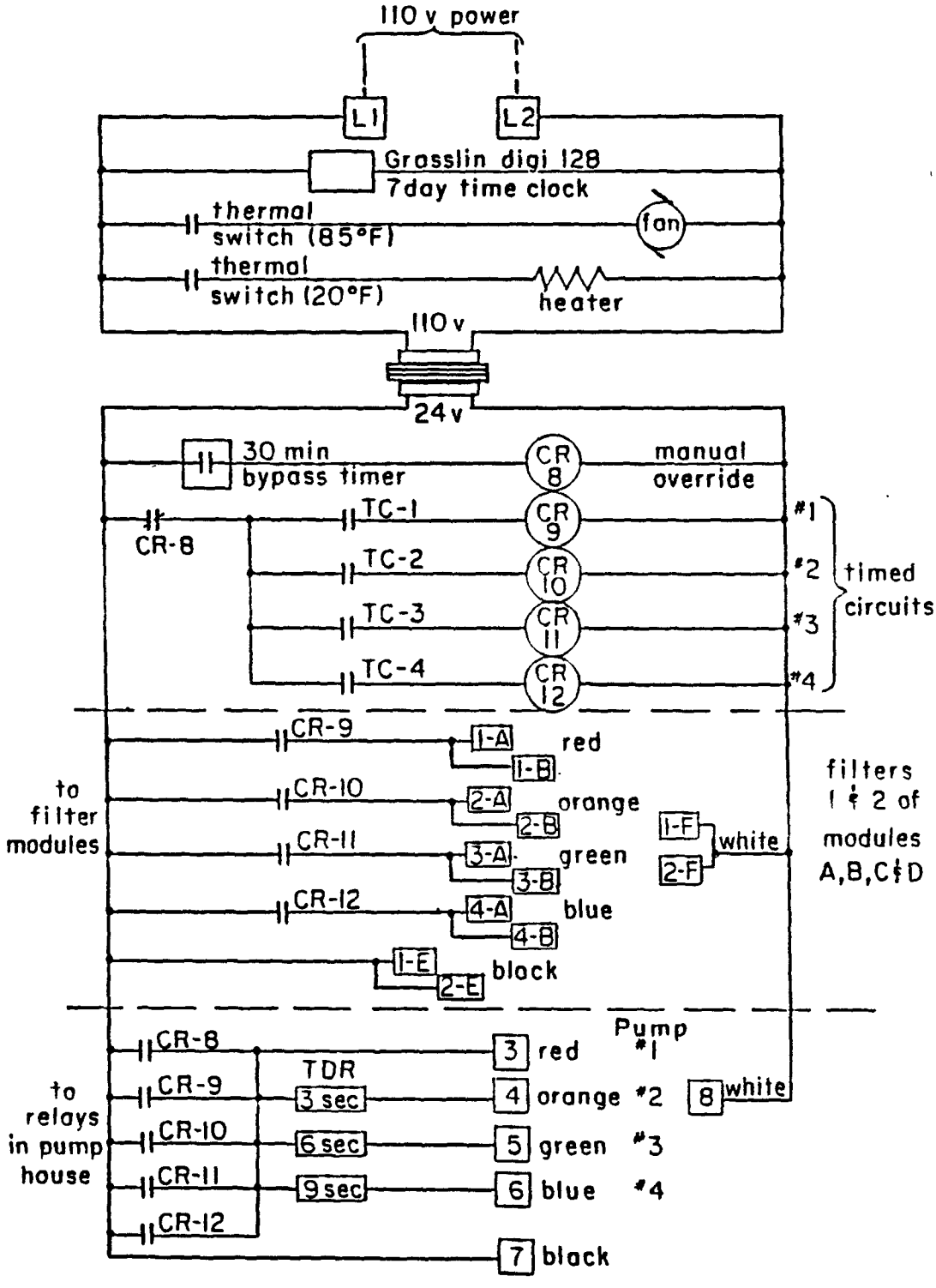

Schematic for IMPROVE Controller

Figure 9. Electrical schematic for control module. TC-n is time clock output for channel n, CR's are control relays, TDR's are time delay relays. The other numbers refer to terminal strip. The colors refer to wire on 6-wire cable.

6. FILTER MODULE

6.1 General Description

Both fine and PM10 modules contain identical control panels with two elapsed time indicators, two toggle switches, a 0-30" Hg vacuum gauge and a 0-1" water magnehelic gauge. They both also contain 2 solenoid valves and a critical orifice. The layout of the fine filter module is shown in Figure 5, and that of the PM10 module in Figure 6.

The airstream enters the fine module through an inlet designed to keep out rain, insects and particles larger than around 15 μm. The airstream than passes through a 3.66 cm metal cyclone that is identical internally to the well-tested cyclone design of Walter John and Georg Reischl of the Air Industrial Hygiene Laboratory used by the California Air Resources Board. It has a 50% efficiency effective cutoff at 2.5 μm aerodynamic diameter at a flow rate of 21.7 l/min. The variation of 50% cutpoint versus flow rate is shown in Figure 10. A 10% decrease in flow rate from 21.7 l/min will produce a 10% increase in cutpoint diameter. For example, a 30% decrease in flow rate to 15.3 l/min will increase the cutpoint to 3.5 μm.

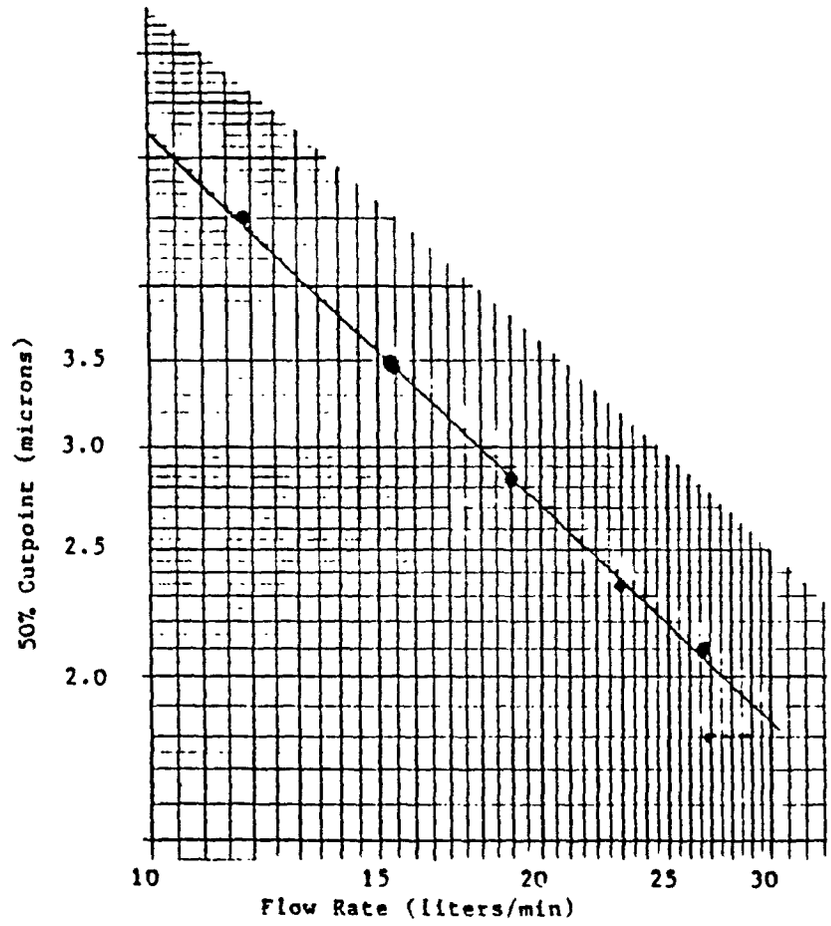

Figure 10. Diameter of 50% cutpoint vs. flow rate for cyclone, from W. John and G. Reischl.

The PM10 module contains a standard PM10 inlet designed and built by Wedding and Associates, that has a 50% efficiciency of 10 μm at a flow rate of 18.9 l/min. The variation in cutpoint diameter with a change in flow rate from 18.9 l/min is not known. The PM10 inlet is attached to a filter cassette manifold identical to that used in the fine module, except it is mounted facing down.

The flow rate is regulated by a critical orifice located downstream of the solenoids. The flow rate depends on the area of the critical orifice and on the pressure and absolute temperature of the air as it enters the orifice. At flow rates near 20 l/min, the pressure drop across the filter can be a significant fraction of the ambient pressure, which can procude small changes in the flow rate. This affects the system in two ways. First, since the different filter media have different pressure drops, it is necessary to use critical orifices of different diameter in each of the four modules. It is not possible to interchange filter media from one module to another and maintain the desired flow rate. Second, the flow rate can decrease when the filters become heavily loaded. Based on data from the SFU network this should rarely be a problem.

The flow rate for a given sample is measured before and after each sampling period using two methods, as described in the next section. The effect of deviations in flow rate from the nominal value of 21.7 or 18 l/min is to change the cutpoint from 2.5 or 10 μm rather than produce errors in volume.

6.2 Flow Rate Measurement

The flow rate is measured in two ways as a weekly quality assurance check. The first measurement is based on the equation for flow through a critical orifice, and the second on the pressure drop across a fixed orifice. Both equations depend on pressure and absolute temperature. The pressure is assumed to depend only on the altitude. (Meteorological variations in pressure are much smaller than those due to altitude; the average variation is less than 1%.) The ambient temperature is measured at the time of the weekly flow rate measurements. In addition, the minimum and maximum temperatures for each week are measured, allowing a slightly more accurate determination of average flow rate over the 24 hour sampling period.

The flow rate through the critical orifice depends on the temperature of the air and the pressure drop in the filter and in other parts of the system up to the critical orifice. When the solenoid is open, the value on the vacuum gauge, ΔP, (in "Hg) measures this pressure drop. (For the PM10 module there is a relative large calibration orifice between the measurement point and the critical orifice, but this decreases the pressure by around 0.2%.) If T is the absolute temperature (°C +273) and P is the ambient pressure in "Hg, then the flow rate by this first method is

$$Q_1 = Q_0 \left(1 - \frac{\Delta P}{P}\right) \left(\frac{T}{280}\right)^{1/2}$$

where Q_0 is the flow rate for no filter, corrected to 280°K, and depends only on the area of the critical orifice. The temperature of 280°K corresponds to 45°F, a typical mean temperature for the network. The temperature term is generally very close to unity. (It differs from 1.00 by less than 5% for temperatures between -5%°F to 96°F.) the critical

orifice is chosen to give a flow rate of 21.7 l/min (fine modules) or 19.8 l/min (PM10) for a typical filter. The constant Q_0 is measured during the system calibration at the site.

The constant Q_0 is designed to give the appropriate flow rate for a given filter type. The desired value depends solely on the average temperature of the air at the critical orifice and is independent of the altitude of the site. If primes indicate the values at another site (such as at Davis), then

$$Q_0 = Q_0' \left(\frac{T}{T'}\right)^{1/2} ,$$

In order to account for variations from the ideal equation, the equation for Q_1 can be written in the more general form

$$Q_1 = (a_1 - b_1 \Delta P) \left(\frac{T}{280}\right)^{1/2} ,$$

where a_1 and b_1 are determined by varying ΔP in the calibration protocol and measuring Q_1.

The second measurement of the flow rate uses a magnehelic gauge to measure the pressure drop across a fixed orifice that is large compared to the critical orifice. For the fine modules, the fixed orifice is provided by the cyclone, while for the PM10 module, it is provided by an orifice built into the system just before the critical orifice. If δP is the pressure drop across the orifice and the pressure at the front of the orifice is at atmosphere then the flow rate is

$$Q_2 = C(\delta P)^b \left(\frac{T}{P}\right)^{1/2}$$

where C is a constant depending on the geometry of the orifice and b is ½ if the flow is laminar. Note that the pressure drop across this orifice of δP is less than 1% of the ΔP across the filter. Assuming the sampler is to remain at the same altitude, the equation can be rewritten in terms of two parameters

$$Q_2 = a_2 (\delta P)^{b_2} \left(\frac{T}{280}\right)^{1/2}$$

Again the parameters a_2 and b_2 are measured during the system calibration. The value of a_2 is around 40 and b_2 slightly less than 0.5.

For the PM10 orifice, the equations are slightly different, because the pressure at the front of the measuring orifice is reduced by the drop across the filter, so

$$Q_2 = C(\delta P)^b \left(\frac{T}{280}\right)^{1/2} \left(1 - \frac{\Delta P}{P}\right)^{1/2}$$

Eliminating ΔP, the pressure drop across the measuring orifice can be written in a parameterized form as

$$Q_2 = a_2 (\delta P)^{b_2} \left(\frac{T}{280}\right)^{1/2}$$

The value of a_2 is around 40 and b_2 slightly less than 1.

The average flow rate for the sampling period will be a weighted average of Q_1 and Q_2 for the initial and final readings. The flow rate will be corrected for changes in temperature using the mean temperature for the week, calculated from the minimum and maximum.

6.3 Flow Rate Audit

The flow rate audit is a check of the flow rate using an audit device placed between a filter cassette and a solenoid, for each of the four filter modules. The audit may be conducted by a third party auditor, using any flow rate meter that has a low pressure drop, by field personnel using an orifice meter supplied by Davis and mailed to and from the site, or by Davis personnel using either an orifice meter or a dry test meter. A mass flow meter is an acceptable device. The orifice meter will be calibrated at Davis using a spirometer and dry test meter. The system magnehelic and vacuum gauge will be read simultaneously in order to compare the flow rate measurements. There are two purposes to the audit: (1) to compare the flow rate measured by the module with the audit flow rate, in order to determine the accuracy in the volume of air collected, and (2) to compare the audit flow rate with the nominal flow rate (21.7 or 18.9 l/min), in order to determine the accuracy in the particle sizing of the cyclone or PM10 inlet. For mail audits the actual flow rates will be calculated at Davis using the information on the logsheet.

The equipment needed for the audit will be a flow rate meter with 1/2 inch standard compression fittings at either end (male fitting at upstream end and female fitting at downstream end), and four filter cassettes with hoses containing standard filters. If the standard filter cassettes are not available, it is possible to use the filters at the site provided for the normal sampling. A logsheet will be provided for the audit, as shown in Figure 11. Record the information at the top of the sheet.

The following procedure is to be used for the audit. First, using the override button for channel 1 on the time clock (see section 5.3), turn on all the pumps and open all first solenoids.

For each of the four modules do the following steps.

—Attach the audit device to solenoid 1 of module.

—Attach the filter cassette with the appropriate filter for that module to other side of the audit device.

—Record the reading for the audit device and for both module gauges.

Any audit device added to the system will decrease the pressure at the front of the critical orifice and thus decrease the flow rate. It is important that the pressure drop produced by this device is small enough to

produce no significant effect. Suppose the pressure drop for the total system up to the critical orifice without the device is ΔP and the device produces an additional δP. The equation for the fractional decrease in flow rate is

$$\frac{\Delta Q}{Q} = \frac{(P-\Delta P) - (P-\Delta P-\delta P)}{(P-\Delta P)} = 1 + \frac{\delta P}{P-\Delta P}$$

That is, the drop produced by the device must be small compared to the pressure at the front of the orifice. The worse case (smallest $P-\Delta P$) would occur at high altitudes and large pressure drop across the filter. For the network this would be with $P-\Delta P$ approximately 15 "Hg = 200 "H_2O. A pressure drop of 2 "H_2O would cause a 1% decrease. The standard calibration devices have a pressure drop of 0.5 "H_2O at 22 l/min, causing an error of 0.25%.

IMPROVE SAMPLER AUDIT LOG

SITE NAME _____ DATE _____

SAMPLER SERIAL NUMBER _____ TEMPERATURE _____ C + 273 = _____ K

AUDITED BY _____ ALTITUDE _____

AUDIT METER NUMBER _____ ALTITUDE FACTOR (A) _____

AUDIT COEFFS: a = _____ b = _____ DENSITY FACTOR: $(T/296)^{1/2} * A$ _____

flow rate at site = density factor * $10^a(\delta p)^b$

MODULE A	pump vacuum _____	
audit device	system magnehelic "H_2O	small gauge "Hg
flow rate by audit device =		
flow rate by system magnehelic =		
flow rate by small gauge =		

MODULE B	pump vacuum _____	
audit device	system magnehelic "H_2O	small gauge "Hg
flow rate by audit device =		
flow rate by system magnehelic =		
flow rate by small gauge =		

MODULE C	pump vacuum _____	
audit device	system magnehelic "H_2O	small gauge "Hg
flow rate by audit device =		
flow rate by system magnehelic =		
flow rate by small gauge =		

MODULE D	pump vacuum _____	
audit device	system magnehelic "H_2O	small gauge "Hg
flow rate by audit device =		
flow rate by system magnehelic =		
flow rate by small gauge =		

Figure 11. Flow rate audit log.

6.4 Flow Rate Calibration

The flow rate calibration is similar to the flow rate audit, except that the flow rate is adjusted to several values using a valve to imitate a variable filter. The calibration will be performed by Davis personnel and includes calculation of the flow rates on site. The only additional equipment is the valve assembly. The calibration logsheet is shown in Figure 12.

At the top of the calibration logsheet, record the site name, sampler serial number (located inside door of controller module), date, temperature, your name, altitude, and altitude (pressure) factor relative to Davis. These last two numbers should be read from Table 2 or Table 3. Using the temperature (°K) and the altitude factor, calculate the air density factor relative to Davis.

$$C = \left(\frac{T}{296}\right)^{1/2} * \text{(altitude factor)}$$

and record on the sheet. This factor is to be used in several places to convert flow rates from Davis values to site values. Record the calibration coefficients for the meter on the sheet. The coefficients relate the flow rate at the site and the measured pressure from the calibration magnehelic:

$$Q = C\ 10^{a}\ (\delta p)^{b}$$

where C is the density factor.

Using the override button for channel 1 on the time clock (see section 5.3), turn on all the pumps and open all first solenoids.

Using the coefficients for the calibration orifice/magnehelic calculate the ΔPc's for the pre-set flow rates on the log using the relationship

$$\delta Pc = \left(\frac{Q}{C10^{a}}\right)^{1/b}$$

Record the desired meter settings on the calibration log sheet.

IMPROVE SAMPLER CALIBRATION LOG

SITE NAME _____ DATE _____

SAMPLER SERIAL NUMBER _____ TEMPERATURE _____ C + 273 = _____ K

CALIBRATED BY _____ ALTITUDE _____

CALIB METER NUMBER _____ ALTITUDE FACTOR (A) _____

CALIB COEFFS: a = _____ b = _____ DENSITY FACTOR: $(T/296)^{1/2}$ * A _____

flow rate at site = density factor * $10^a(\delta p)^b$

MODULE A		pump vacuum _____	
flow rate l/min	calib magnehelic "H_2O	system magnehelic "H_2O	small gauge "Hg
max			
21.7			
19.5			
16.3			
magnehelic (log fit) r =			
log flow=		+	*log(δP)
small gauge (linear fit) r =			
flow=		-	*(ΔP)

MODULE B		pump vacuum _____	
flow rate l/min	calib magnehelic "H_2O	system magnehelic "H_2O	small gauge "Hg
max			
21.7			
19.5			
16.3			
magnehelic (log fit) r =			
log flow=		+	*log(δP)
small gauge (linear fit) r =			
flow=		-	*(ΔP)

MODULE C		pump vacuum _____	
flow rate l/min	calib magnehelic "H_2O	system magnehelic "H_2O	small gauge "Hg
max			
21.7			
19.5			
16.3			
magnehelic (log fit) r =			
log flow=		+	*log(δP)
small gauge (linear fit) r =			
flow=		-	*(ΔP)

MODULE D		pump vacuum _____	
flow rate l/min	calib magnehelic "H_2O	system magnehelic "H_2O	small gauge "Hg
max			
18.9			
17.0			
14.2			
magnehelic (log fit) r =			
log flow=		+	*log(δP)
small gauge (linear fit) r =			
flow=		-	*(ΔP)

max = readings with no filter

Figure 12. Flow rate calibration log.

Table 2. Density factors at IMPROVE sites
(factor relative to Davis)

factor = [P(Davis) / P(site)] $^{1/2}$

site	alt feet	P "Hg	factor	site	alt feet	P "Hg	factor
Acadia	470	29.4	1.007	Guadalupe Mtns	5446	24.4	1.105
Arches	5500	24.4	1.106	Jarbidge	6200	23.7	1.121
Big Bend	3460	26.4	1.063	Mesa Verde	7200	22.8	1.142
Bridger	8000	22.2	1.159	Mount Rainier	1400	28.4	1.025
Bryce Canyon	7950	22.2	1.159	Petrified For	5500	24.4	1.106
Canyonlands	5950	24.0	1.116	Pinnacles	1040	28.8	1.018
Chiricahua	5400	24.4	1.104	Rocky Mountain	7910	22.3	1.157
Crater Lake	6479	23.5	1.126	San Gorgonio	5618	24.3	1.108
Denali	2100	27.7	1.037	Shenandoah	3515	26.3	1.065
Glacier	3200	26.6	1.059	Weminuche	9140	21.2	1.186
Grand Canyon	7100	22.9	1.140	Yellowstone	7750	22.4	1.154
Great Smoky	2700	27.1	1.049	Yosemite	5250	24.6	1.101

Table 3. Density factor vs. altitude
(factor relative to Davis)

factor = [P(Davis) / P(site)] $^{1/2}$

alt feet	P "Hg	factor	alt feet	P "Hg	factor	alt feet	P "Hg	factor
0	29.9	0.998	3600	26.2	1.067	7000	23.0	1.138
200	29.7	1.002	3800	26.0	1.071	7200	22.8	1.142
600	29.2	1.010	4000	25.8	1.075	7400	22.7	1.146
800	29.0	1.013	4200	25.6	1.079	7600	22.5	1.151
1000	28.8	1.017	4400	25.4	1.083	7800	22.4	1.155
1200	28.6	1.021	4600	25.2	1.088	8000	22.2	1.159
1400	28.4	1.025	4800	25.0	1.092	8200	22.0	1.164
1600	28.2	1.028	5000	24.8	1.096	8400	21.8	1.168
1800	28.0	1.032	5200	24.6	1.100	8600	21.7	1.173
2000	27.8	1.036	5400	24.4	1.104	8800	21.5	1.178
2200	27.6	1.039	5600	24.3	1.108	9000	21.3	1.183
2400	27.4	1.043	5800	24.1	1.113	9200	21.1	1.187
2600	27.2	1.047	6000	23.9	1.117	9400	21.0	1.192
2800	27.0	1.051	6200	23.7	1.121	9600	20.8	1.197
3000	26.8	1.055	6400	23.5	1.125	9800	20.7	1.201
3200	26.6	1.059	6600	23.4	1.130			
3400	26.4	1.063	6800	23.2	1.134			

For each of the three fine modules do the following steps.

—Attach the calibration meter to solenoid 1 of module.

—Attach the filter cassette with the appropriate filter for that module to other side of the calibration meter, in the same manner as for the audit.

—Calculate the flow rate using the calibration magnehelic using the relationship for the calibration magnehelic system

$$Q = C\ 10^{a}\ (\delta p)^{b}$$

—If the flow differs from 21.7 or 18.9 by more than a few percent, replace the critical orifice until a better value is obtained.

—Replace the filter cassette with the valve assembly (without filter) designed to act as a variable filter.

—For each of the four points adjust the valve to give the desired δPc on the calibration magnehelic and record both module gauges. If desired do other points.

—For modules ABC, perform a linear regression fit for the magnehelic using the log relationship

$$\log A = a_2 + b_2 \log (\delta P).$$

—For module D, perform a regression fit for the magnehelic gauge using the linear relationship

$$Q = a_2 + b_2\ \delta P$$

Check that r is greater than 0.990. Record the coefficients. For modules ABC, b_2 is slightly less than 0.5 and a_2 is around 1.5. For module D, the coefficient a_2 should be much smaller than b_2.

—Perform a regression fit for the vacuum gauge using the relationship

$$Q = a_1 + b_1\ \Delta P$$

Check that -r is greater than 0.990. Record the coefficients. The coefficient b_1 will be negative, and a_1 is much larger than b_1.

—For modules ABC, mark the 21.7 readings on both gauges in green ink and the 23.9 and 19.5 readings on both gauges in red ink. For module D, mark the respective readings are 18.9, 20.8 and 17.0.

6.5 Electrical Circuitry

The electrical schematic for a filter module is shown in Figure 13. The connection with the control module is through a six wire cable. The solenoid valve (SV) and elapsed time indicator (ETI) will be activated if either the appropriate clock output is on or if the appropriate toggle switch is turned on. When the toggle switch is released if will always return to the normally open position, giving control to the time clock.

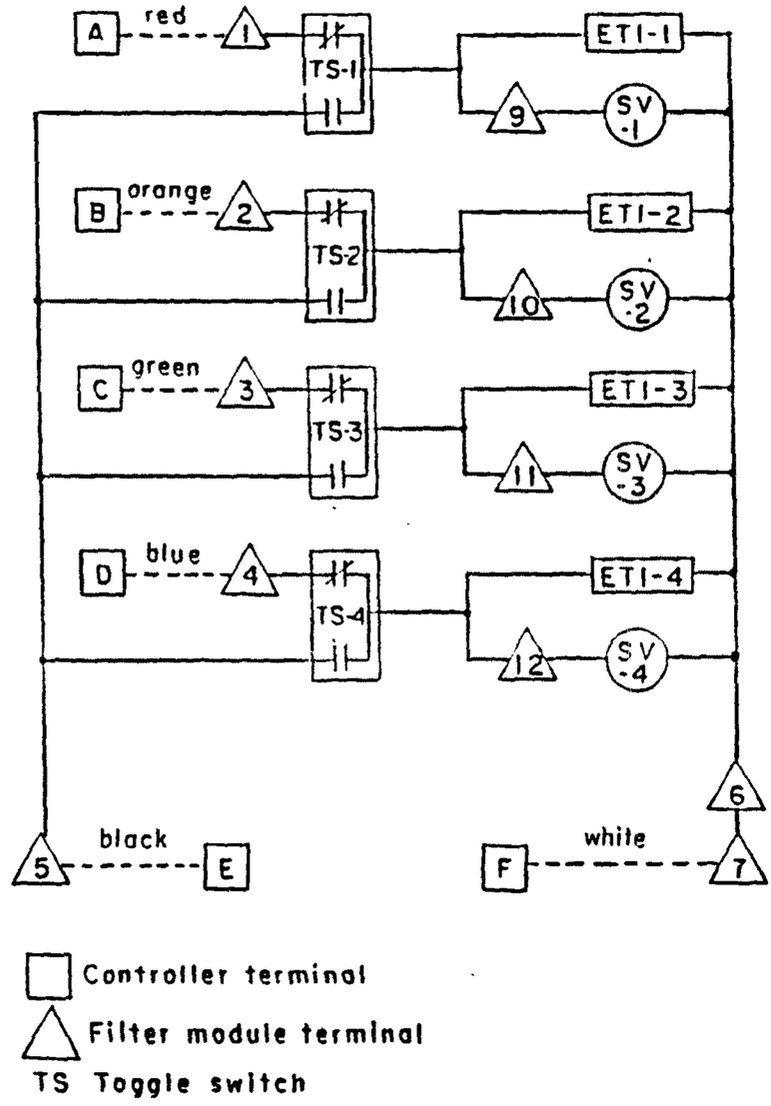

Figure 13. Electrical schematic for filter module. TS = toggle switch, ETI = elasped time indicator, SV = solenoid valves. The colors refer to the wire on the 6-wire cable.

6.6 Nitrate Denuder

The nitrate denuder is installed in the inlet tube of module B. As shown in Figure 14, it consists of a series of four concentric aluminum cylinders coated with Na_2CO_3. The total surface area is $0.3m^3$. The nitrate gases (NO_2, NO_3) will diffuse to a wall and be captured, while the particles pass through, because of the much smaller diffusion rate for particles. At a regular interval (perhaps a year) the entire cylinder must be replaced and returned to Davis for recoating. Normally this change will be performed by Davis personnel.

The denuder will fit inside the inlet tube. The operator need only open the cap at the base of the inlet, pull out the old denuder, replace it with a new denuder and recap the inlet. More detailed procedures will be available when the system is developed.

To replace the denuder, it is necessary to remove the cap at the base of the inlet and remove the screw-pin holding the denuder in the inlet. A handle will be screwed into the base of the denuder (from below) and the denuder pulled down. The new denuder will be pushed up using the same handle and the screw-pin inserted. The handle will then be removed and the cap replaced. The spent denuder will be recharged at Davis.

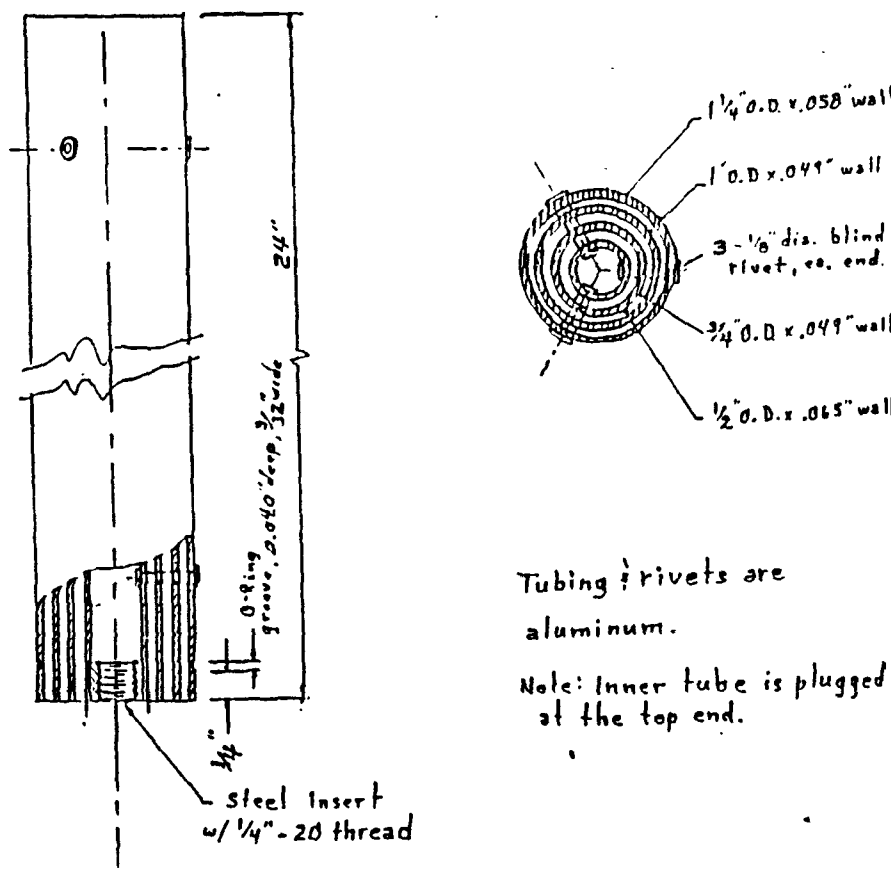

Figure 14. Nitrate denuder.

7. PUMP HOUSE

7.1 General Description

The pump house is an all-weather house measuring 3'x2'x4'. Inside there are four pumps with surge tanks, a box of 4 switched 120V outlets, a box of 4 unswitched 120V outlets, a fan with thermal switch, a lamp socket with manual switch and heat tape with thermal switch (where necessary). The wall of the pump house is shown in Figure 15. Attached to the outside of the house is a weather-tight electrical box contain four power relays.

The external 120V line is attached to the terminal strip inside the relay box. 120V lines are then carried to the control module, to the unswitched outlet box and through the power relays to the switched outlet box. A 6-wire cable from the control module connects to the control terminals of the power relays.

7.2 Pump Specifications

The pump is a 0.5 HP oilless diaphragm vacuum pump, Gast model DAA-V132-GB. The pump can draw 38 l/min at 15 "Hg and 17 l/min at 20 "Hg.

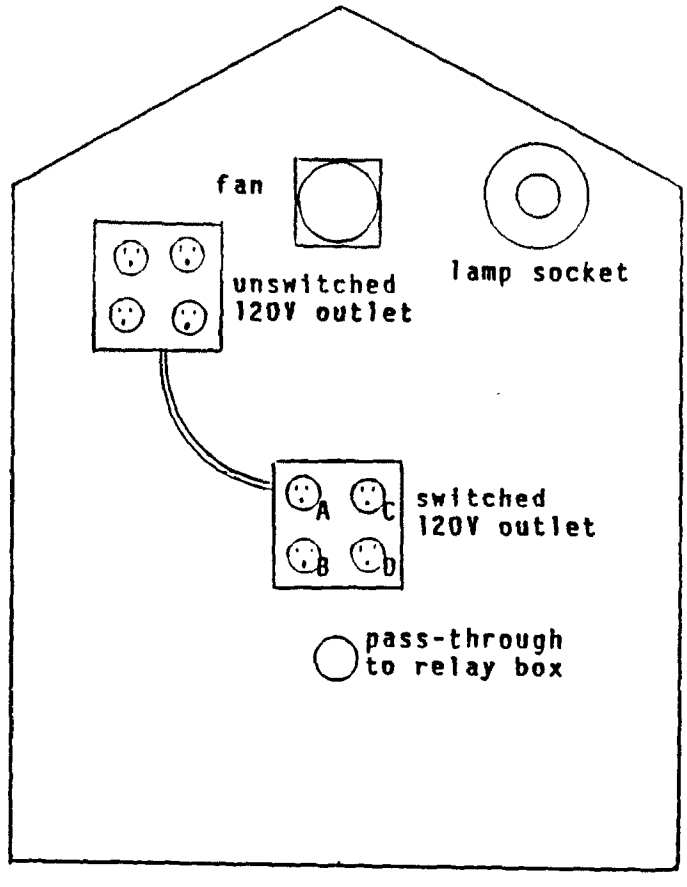

Figure 15. Layout of wall of pump house.

7.3 Electrical Circuitry

The electrical schematics for the pump house are shown in Figure 16. The output from the control module activates a 20A power relay which provides 120V to a switch outlet used by one of the pumps. For safety, both the hot and neutral 120V lines are switched. In addition to the four switched outlets, the pump house has four unswitched outlets (not shown).

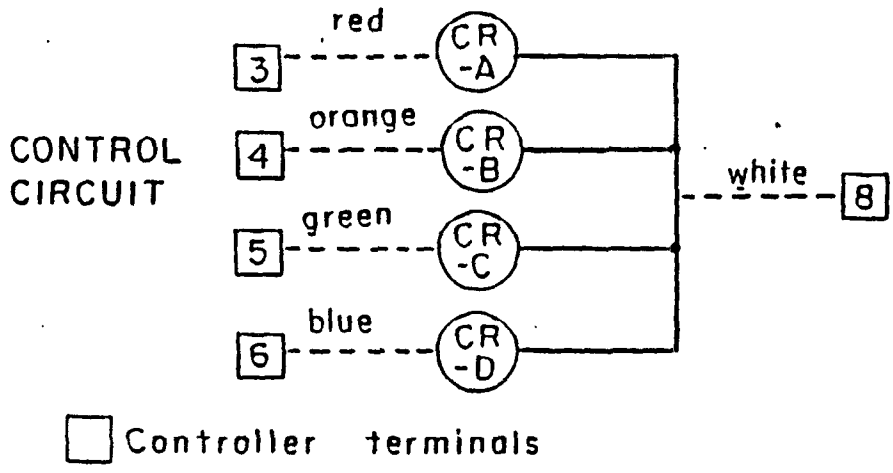

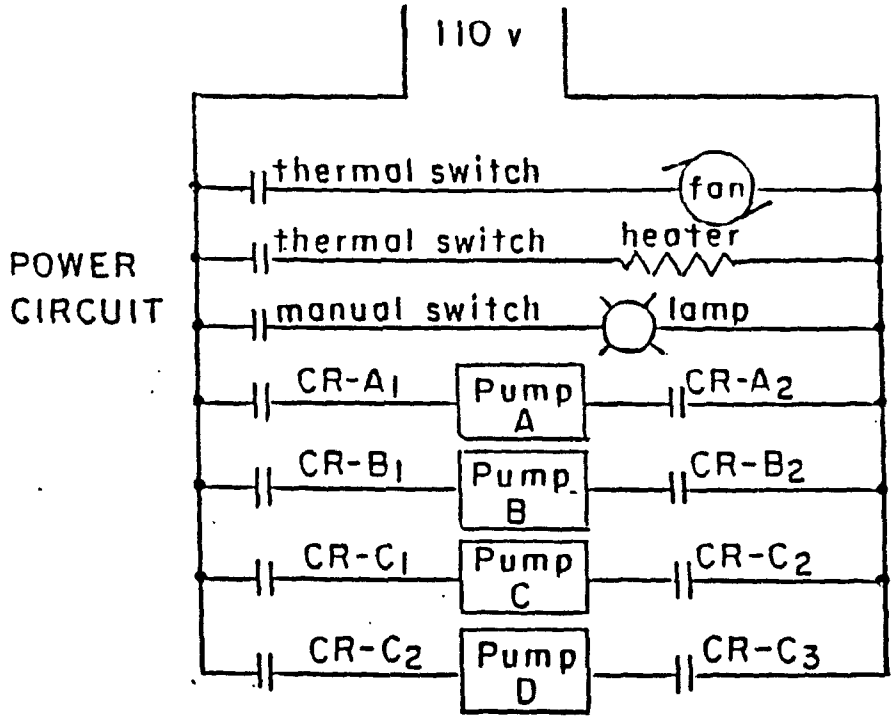

Figure 16. Electrical schematic for pump house. CR = control relays

The relays are located in a weathertight box attached to the outside of the pump house. Figure 17 shows a schematic for the relay box. The power cable enters the box from the bottom and is attached to the terminal strip as shown.

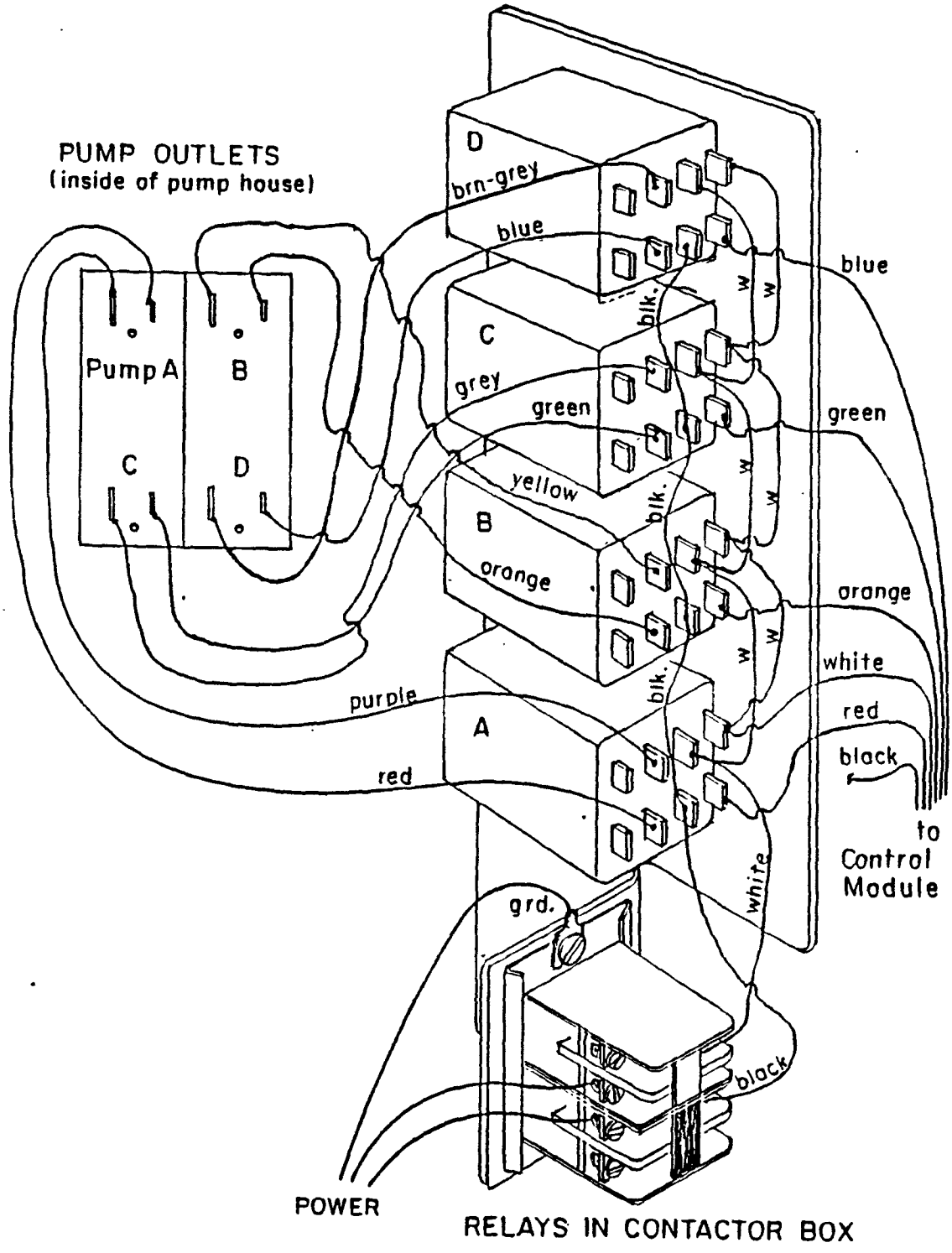

Figure 17. Electrical schematic for relay box

8. SAMPLER STAND

The five fiberglass enclosures must be mounted on a stand. Because of the difficulty in transportation, and because individual sites may have special needs, the stand is generally built locally. At some sites the sampler is located outdoors, so that a freestanding wooden stand is appropriate. At some sites where an air quality building already exists, the stand consists of support boards attached to the walls of the building.

The stand shown in Figure 18, often built of redwood, is used at most sites that do not have an air quality building. To insure the stability of the unit, the legs are fastened to concrete piers and imbedded in the ground. In situations of uneven ground, it is desireable to have legs of different length, in order to keep the horizontal beams level. Holes with 12 inch spacing must be drilled in the horizontal beams in order to mount the enclosures.

The stand is also to have sunshields above the enclosures. A short shield, 2 feet long, goes above the control module. A long shield, 104 1/2 inches long, goes above the four filter modules, with holes cut for the inlets. The shields are attached to the stand using angle brackets. It is important to orient the stand so that the fronts of the enclosures do not face the afternoon sun (west).

If the sampler is mounted inside a shelter, it is usually necessary to use longer inlet stacks. The four holes in the support board for each module must be 12 inches apart horizontally and 18.75 inches apart vertically. Adjacent modules should not have the mounting holes closer than 8 inches apart.

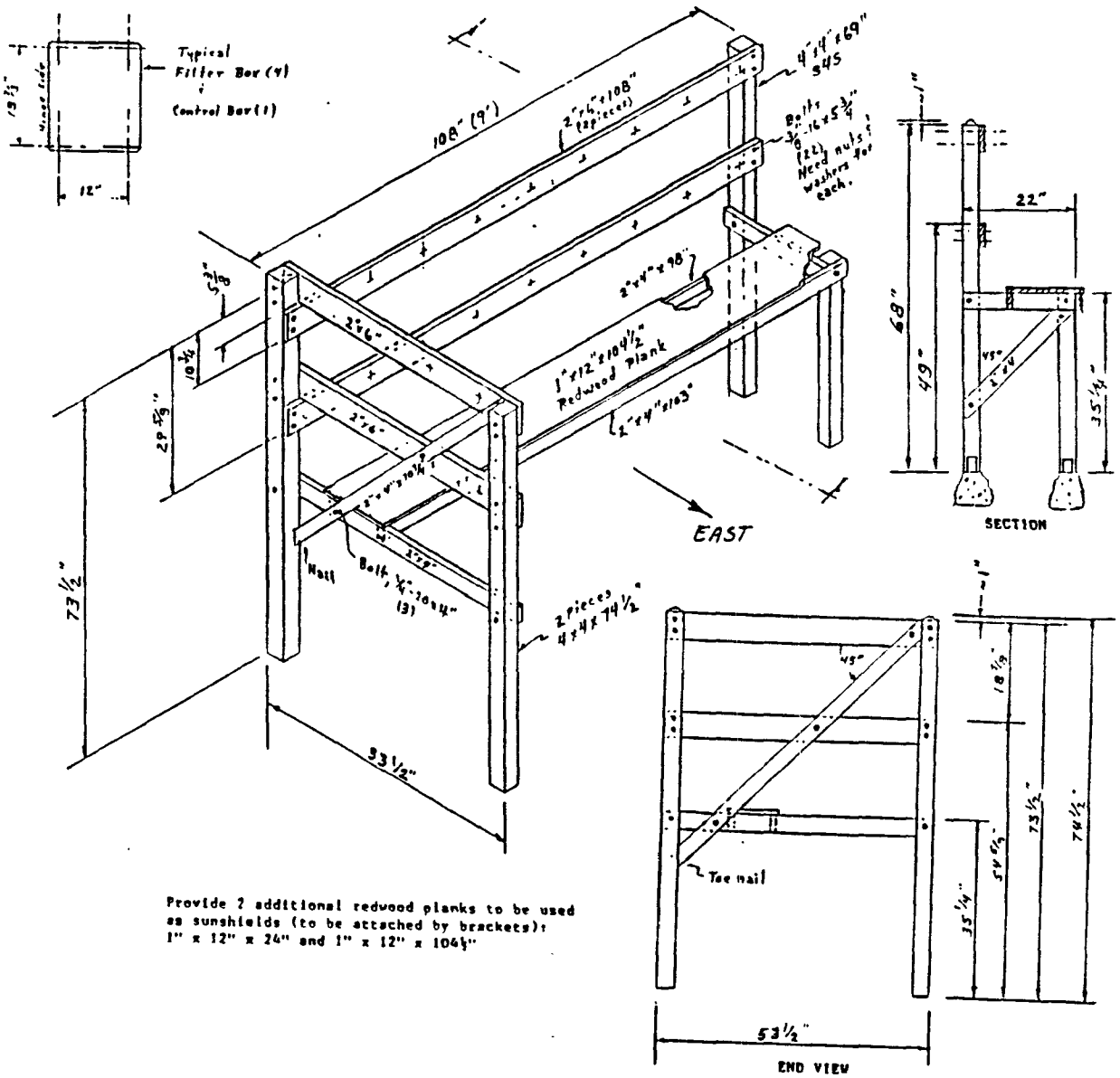

Figure 18. Outdoor stand for IMPROVE sampler

9. Acknowledgments

The following members of the Air Quality Group or Crocker Nuclear Laboratory were responsible for the development of the IMPROVE sampler.

Sampler design and evaluation: C. Goodart, R.A. Eldred, T.A. Cahill, P.J. Feeney, L.K. Wilkinson, P. Beveridge, T. Essert (electrical), O. Raabe (flow rate, denuder), S. Teague (flow rate, denuder), B. Pedersen (denuder), K. Bowers (SO_2 collection)

Sampler construction and installation: R.A. Eldred, C. Goodart, P. Beveridge, I. Wittmeyer, P. Wakabayashi, D. Everitt, J. Cordova, B. Matsumura, S. Eldred, P. Dyer, M. VandeWater, E. Steen, D. Cecil (purchasing).

Special field studies (WHITEX, SCAQS): L.K. Wilkinson, I. Wittmeyer, P. Beveridge, M. Surovik, P. Wakabayashi, D. Everitt, J. Cordova, B. Matsumura, H. Miyake, B. Perley, S. Eldred, T.A. Cahill, R.A. Eldred, T. Tanada, D. Orr, C. Semantis, J. Cooper, E. Steen, H. Miyake, K. Mitchell, O. Beckmann, F. terVeer, W. Reeves, B. Nicolet, K. Bowers, C. Cahill

Documentation: R.A. Eldred, J. Hancock, C. Goodart, C. Baro.

The controller modules were fabricated by ENDECO Controls of Rio Linda. Most of the machine work was done by Streetman Precision of Cameron Park and G's Machine of Placerville.

We would like to thank the UC Davis purchasing department for their considerable help in reducing costs, especially Mari Harrod.

We would like to thank Walter John of Air Industrial Hygiene laboratory for the plans for the cyclone.

We would like to thank Marc Pitchford, EPA-Las Vegas and a member of the IMPROVE committee for the many helpful discussions concerning design.

APPENDIX 3: Gravimetric Mass Startup Procedures

A. Cleaning and Calibration of the Electrobalance

B. IMPROVE Gravimetric Controls

APPENDIX 3: Gravimetric Mass Startup Procedures

A. CLEANING AND CALIBRATION OF THE ELECTROBALANCE

The first work action at the beginning of each day and immediately after lunch period is to clean and calibrate the electrobalance. It will also be recalibrated if the balance fails a "zero" test that is performed periodically. The procedures described here are outlined in the Cahn 31 Electrobalance Instruction Manual in Section 4, Operations.

A Balance Log is maintained for each balance. All of the calibration results are to be recorded in the Balance Log. In addition, all significant events concerning the balance and any balance maintenance other than routine are to be recorded in the Balance Log.

The steps for cleaning and calibration are as follows.

1. Clean the metal and plastic forceps with ethanol and a Kimwipe.

2. Carefully remove each balance pan by inserting closed forceps below the wire yoke of the pan bail and lifting the hook from the eye. To protect the hangdown and hangdown loop, do not grasp the bail or hook assembly with the forceps. Gently rest the pans on a fresh clean Kimwipe.

3. Remove the antistatic ionizing strip from the weighing cavity.

4. Clean and deionize the inside of the balance cavity using a cotton-tipped applicator wetted with ammonia. Gently brush the exposed surfaces of the cavity, taking care not to disturb the hangdowns extending from the top surface. Gently close the glass slide door and gently brush the outer surface with the ammonia tip to control static change.

5. Clean the top surfaces of the balance pans with a cotton-tipped applicator wetted with ethanol. The entire surface lust be clean and dry. Do not use any solvent other than ethanol on the pans.

6. Clean the top surface and the strips of the antistatic ionizing units by gently rubbing with a cotton-tipped applicator wetted with ethanol.

7. Replace the clean ionizing unit in the center back of the balance cavity.

8. Gently return the balance pans to their hang down loops. Use the bail- lifting procedure previously described. Do not put any stress on the bail or hang down loop.

9. Record the time and the balance temperature from the top surface thermometer. Read the mass when there is nothing in the pan; this is the "zero" mass. It should be within 0.010 mg of 0.000. This value may be exceeded if the ethanol has not completely evaporated; in this case, the reading will drift toward 0 as the ethanol vaporizes. Record the "zero" mass.

10. Depress the tare button. This forces the "zero" mass to be exactly 0.000. Record this 0.000 value.

11. Momentarily ground yourself by touching the electrostatic mat. Use plastic forceps to remove the 200.000 mg class 1.1 (Class M) calibration mass from its container. Gently place it in the center of the balance pan and allow the mass reading to stabilize and stop decreasing. This will require from 30 to 60 seconds depending on how smoothly the mass was released onto the pan. When the reading stabilizes, record the mass. Next, press the calibrate button, forcing the balance to indicate 200.000 mg. Record this value. Gently remove the calibration mass and replace it in its container.

12. Remove the standard 50.000 mg mass from its container using plastic forceps. Gently place it in the center of the balance pan. After the reading stabilizes, record the mass in the Balance Log. Record your initials to indicate your calibration.

13. Allow the balance to return to "zero". Compare the zero value and the value determined for the 50.000 mg mass to previous values. If they exceed ±2 micrograms, repeat the procedure. If greater variations are observed, see the laboratory supervisor.

14. After cleaning and calibration, the electrobalance is available for routine determination of mass.

15. Clean the work surface of the antistatic mat with a clean brush or a Kimwipe dampened with water. Do not use ethanol as it will damage the mat surface.

16. Clean the metal forceps and the antistatic ionizing strips by wiping them with ethanol and a clean Kimwipe.

17. The next step is to process the control filters, following the procedures described under IMPROVE Gravimetric Controls.

18. On a random basis, but at least semiannually, the laboratory supervisor will request a comparison of the normal calibration standards with a second set of reference standard masses maintained by the laboratory supervisor. After calibration, measure these 200.000, 50.000, and 20.000 mg standards and report their masses to the supervisor. These results are used to verify the integrity of the electrobalance and the standard masses used in daily calibrations.

B. IMPROVE GRAVIMETRIC CONTROLS

The gravimetric control program is used to determine the precision of the gravimetric analysis and the mass artifact associated with the storage of teflon filters in cassettes.

The procedure for a control filter is to measure its mass twice, allow it to remain in an IMPROVE cassette for approximately 35 days, and then remeasure the mass twice. The filter is then put in a permanent slide mount and archived in a slide tray. A computer program determines the precision of two pairs of mass measurements and calculates the mass artifact associated with the cassette by subtracting the mean initial mass from the mean final mass.

The procedures for the beginning of the day, immediately after cleaning and calibrating the balance, are as follows.

1. Obtain a clean 25 mm teflon filter from the prepared stock maintained for SFU samplers. This filter is in a petri dish identified with an additional "S". This filter is known as the "PRE" filter.

2. Select the next premade Control Identification Tag kept at the front of the Balance Log (e.g. I-465) and attach it to the petri dish.

3. Locate the oldest IMPROVE Control cassette, indicated by the lowest control number and place it in the electrobalance work area. This filter is known as the "POST" filter.

4. Download the POST cassette and place both the PRE and POST filters on antistatic strips.

5. Prepare an IMPROVE Control tag for recording all the values required by the Control database. This tag should have three columns and have the following form.

Pre	"new" control ID	RePre
Post	"old" control ID	RePost

Date _____ Technician ____ entered ____

6. Measure the PRE filter, record its mass, and place the filter into a clean petri dish. Affix the identification tag for this filter on the petri dish.

7. Measure the POST filter, record its mass, and place the filter into a clean petri dish. Remove the identification tag from the cassette and affix it on the petri dish.

8. Store both petri dishes, the control tag, and the empty cassette until required for the afternoon measurements.

The procedures for the beginning of the afternoon, immediately after cleaning and calibrating the electrobalance, are as follows.

1. Remove the PRE and POST filters from their petri dishes and place them on antistatic strips.

2. Prepare an 18x24 mm slide mount to receive the POST filter. Write the following information on the white side of the mount using a felt-tip pen.

   a. IMPROVE control number (e.g. I-430),
   b. The corresponding S number (e.g. S-1391),
   c. Today's date (e.g. 5/17/89),
   d. The number of the next empty position in the 40-position archive slide tray (e.g. 13).

3. Remeasure the PRE filter, record its mass (REPRE), and mount the PRE filter in the empty IMPROVE control cassette, following the standard protocol.

   Center the drain disk and the 2.2 cm^2 mask. Place the filter on the disk and mask with the smooth side up. Replace the lock ring and cassette cup and protective red cover. Affix the PRE identification tags to the cassette and place it at the end of the queue of IMPROVE control cassettes.

4. Measure mass of the POST filter and record its value (REPOST). Mount the filter on the slide mount with the smooth side facing the black half of the mount. Place the mount in the next empty slide tray position. Replace the tray cover, and return the tray to its storage place.

5. Input all the control data into the database using the program IMPCONT. Enter the morning masses, PRE and POST, followed by the afternoon masses, REPRE and REPOST. The program calculates and presents the precision of both pairs and the 35-day mass gain.

6. Precision values should not exceed ±5 micrograms. If they do, select the no-entry function of IMPCONT and correct the gravimetric problem. Precision of ±5 to 10 micrograms generally indicates a calibration problem. Greater values indicate incorrect identification problems.

7. When verified, input the data into the database permanently by selecting the "yes" input. This completes the daily control actions.

8. Every month, the laboratory supervisor will activate a feature of IMPCONT that calculates and summarizes all precision and mass artifact values for the selected month. These results are appended to the data for previous months and printed out in hard copy.

APPENDIX 4: LIPM Startup Procedures

CALIBRATION OF THE LASER INTEGRATING PLATE METHOD (LIPM) SYSTEM

1. Do not begin the calibration unless the LIPM system has been on for at least two hours, allowing the laser to stabilize. The LIPM system is programmed to be on daily between 0600 and 1800. Verify that the timer is indicating the correct time. If necessary, set the timer to the correct time by rotating ahead clockwise.

2. Routine operation of the system requires no adjustments except a vernier multiplier setting. Verify that the Oriel Detection System Model 7022 has the following startup settings:

   a. Multiplier is set on the $x10^{-9}$ level
   b. The 45 volt switch is ON
   c. Ambient supress is OFF
   d. Response is set to MEDIUM
   e. Zero Set is OFF
   f. Verify that the collimator aperture is installed.

3. Blank off the input laser light by moving the Beam Attenuation lever to "closed." Verify that the detector digital readout is 0.000 (zero). If not, adjust the Zero Set knob until the detector indicates 0.000.

4. Open the Beam Attenuation lever and push the slide changer in all the way. Make sure the tray-covering flap is closed. The detector should indicate 0.000. If the measurement exceeds +0.005, check for an open cover flap or for a physical malfunction of the changer. Notify the laboratory supervisor.

5. Pull the slide changer all the way out. Use the vernier multiplier extension arm to set the detector reading to the protocol calibration level of 0.750.

6. Mount the LIPM standards tray of 10 standards in the system. These standards test all parameters of slide orientation and include a spectrum of actual filters and aerosols.

7. Record the date, your initials, and the values obtained for each of the standards slides on the LIPM calibration logsheet in the LIPM protocol folder. Record the values for standards 1 thru 10. Periodically verify between slides that the detector reference level remains at 0.750 with the slide changer fully out.

8. Compare the values obtained with previous values reported in the logbook and the highlighted standard values. If values differ by more than ±0.003, repeat the procedure. If deviations still exist, consult with the laboratory supervisor.

9. The LIPM system is now ready for routine analysis of filters.

APPENDIX 5: PIXE/PESA Procedures

PIXE RUN DIRECTIONS

1. CONTROL ROOM OPERATIONS

   a. Before going into CAVE (close target)

   -- Hit 'CLOSE' button on the lower left hand side of control panel.
   -- Hold down 'TARGET' button (in the middle of the control panel) until 'CLOSE' button turns amber. (Takes 5 seconds)
   -- Hit 'CLOSE' Button to Cave (on top right hand side of control panel)
   -- Remove key labeled North Cave Door No. 3.
   -- Close pumps (Move toggle from HIVAC to middle position)

   b. After coming out of CAVE (open target)

   -- TURN ON roughing pump (toggle to rough). When vacuum reaches 80 microns, turn toggle to HIVAC.
   -- Put back key
   -- Hold down 'OPEN' button to cave, in the center section of the control panel next to the 'TARGET' button. (Takes 30 seconds)
   -- Hit 'OPEN' button on upper right hand side of panel until button lights up
   -- Hit 'OPEN' button in lower left hand side of panel after you check with operator to make sure vacuum pressure is low enough.

2. TO MOVE TRAY OR STRIP FRAME AT DISPLAY PANEL

   -- Switch to manual
   -- If slide is still showing on TV screen (and "slide in" light is on), hit black button next to 'Slide Drive' and slide will move back into tray, (and "slide out" light will be on).
   -- Hit toggle switch next to 'Tray Drive' toward 'F' (forward) or 'R' (reverse), depending on the direction you wish to move to tray or strip.
   -- Hit black button next to tray drive and tray or slide will move one position at a time. (Remember, only move the tray when the slide is "out".)
   -- Hit black button next to 'Slide Drive' and a slide should be showing on the TV screen. ("Slide in" light will be on)
   -- Switch back to automatic and hit 'Enter Auto' on the display panel.
   -- Enter master tray #, hit return, enter position # hit return, and analysis will begin again.

3. TO CHANGE TRAYS OR STRIP FRAMES

   1) Press the green button on the metal box located on the beam line before the slide changer. This is just to make sure the gate valve is really closed.

   2) Turn blue handle on slide changer slowly to let air into tube.

   3) a) FOR TRAYS

   -- Open bottom of tube and pull out the 3 trays slowly, making sure the slides do not fall out of trays.

-- Replace bottom
-- Place an "X" on tray boxes that were just analyzed
-- Open top of tube and slide new trays in with position # facing up. Make sure trays attach in tube and are not at an angle- this may cause the slide changer to jam.
-- Replace top

b) FOR STRIPS

-- Move strip back to position #1 by holding both black buttons next to 'DRIVE' and 'DIRECTION' on side of slide changer
-- Remove plastic cover over stripper
-- Take out strip, put an 'X' on white side of frame and put into frame box
-- Put next strip to be analyzed into stripper with the blue side of the frame facing down and the green dot on the left hand side.
-- Replace plastic cover-don't make screws too tight

4) Use red button in back of slide changer to move 1st slide into place- you know you are in the right position when the #1 slot in the first tray is covered by the slide changer.

5) Turn blue handle over slide changer to seal vacuum

6) Push white button in back of cave and close the cave

APPENDIX 6: Ion Contractor Procedures (RTI)

RESEARCH TRIANGLE INSTITUTE

STANDARD OPERATING PROCEDURE:
ION ANALYSIS OF FILTERS

for

THE NATIONAL PARK SERVICE

Prepared by

Research Triangle Institute
Research Triangle Park, North Carolina 27709

NPS Contract No.: CX-0001-6-0007

Prepared for

U.S. Department of the Interior
National Park Service
Washington, D.C. 20013

POST OFFICE BOX 12194 RESEARCH TRIANGLE PARK, NORTH CAROLINA 27709-2194

STANDARD OPERATING PROCEDURE
FOR NPS FILTER ANALYSIS

The procedures followed by the Research Triangle Institute (RTI) in the analysis of National Park Service (NPS) samples under Contract No. CX-0001-6-0007 are summarized below:

1) RTI receives filters in lots of approximately 100 to 200 each. Sample information is entered onto sample custody logsheets upon receipt.

2) Upon receipt, the samples are stored in a locked laboratory. After the samples have been desorbed, the extract is stored in a refrigerator in a locked sample custody room.

3) Within 30 days after sample receipt, Cl^-, NO_2^-, NO_3^-, and SO_4^{2-} analyses are performed on each sample by ion chromatography.

4) In addition to analyzing the field samples, RTI participates in EPA-sponsored analytical performance audits which include the analysis of reference precipitation samples.

5) The data are reported, by filter lot, to the National Park Service in hard copy and on floppy disk in ASCII format.

Details of these procedures are presented in the following sections.

1.0 SAMPLE STORAGE AND TRANSPORTATION PROCEDURES

Sample collection and transportation of the samples to the RTI Ion Analysis Laboratory are the responsibility of the particulate monitoring coordination contractor (PMCC)/NPS.

Samples are shipped to RTI in lots of approximately 100 to 200.

2.0 SAMPLE CHECK-IN AND HANDLING IN THE LABORATORY

Samples are mailed to RTI in secure containers. Upon receipt, RTI does the following:.

1) Open the shipping box and remove the samples.

2) Record the PMCC/NPS Sample ID, date of receipt, and comments (broken package, contamination, etc.) on the Sample Log Form (Figure 1).

NPS Filter Samples

Date Received _____ Lot _____

Sample ID	Extraction Date	Comments	Analysis		Rerun
			Date	IC	

Figure 1. Sample Log Form.

3) Store the samples in a locked laboratory for future desorption.

3.0 SAMPLE ANALYSIS METHODOLOGY

The analysis procedures for the filter samples are given below. The ion chromatographic procedures initially were taken from "Operations and Maintenance Manual for Precipitation Chemistry Measurement Systems" prepared by Rockwell International. Some improvements have been made.

3.1 Filter Extraction

Using tweezers, place each filter in a Nalgene Monovette and add 15 mL of extraction solution (0.0017M $NaHCO_3$/0.0018M Na_2CO_3) using a repipet. Push up the Monovette plunger so that no air space remains above the filter. Expose the Monovette and solution to ultrasonic energy for 30 minutes and then allow to sit overnight. This process releases greater than 97 percent of the chloride, nitrite, nitrate, and sulfate into the solution. Record the date of extraction on the Sample Log Form.

3.2 Determination of Chloride, Nitrite, Nitrate, and Sulfate Using Ion Chromatography

3.2.1 Scope and Application --

This method covers the determination of chloride, nitrite, nitrate, and sulfate in filter extracts.

3.2.2 Summary of Method --

The anions are separated when passed through a resin consisting of polymer beads coated with quaternary ammonium active sites. The separation is due to the different affinities of the anions for the active resin sites.

After separation, the anions pass through a suppressor column which exchanges all cations for H^+ ions. Species are detected as their acids by a conductivity meter. (An eluent which yields a low conducting acid is used.)

3.2.3 Interferences --

Large amounts of anions eluting close to those anions of interest will result in an interference. No interferences have been observed in NPS filter samples analyzed to date.

3.2.4 Apparatus --

Ion chromatograph (Dionex Manual Model 2120i or Model 14) with anion guard column, anion fast run separator column, and anion micromembrane suppressor column.

Four-liter collapsible bags.

Pipets - an assortment of sizes.

Volumetric flasks - an assortment of sizes.

Disposable syringes - 5 mL capacity

Disposable filters - Acrodisc 0.45 μm, or equivalent

IBM/PC-based Dynamic Solutions Chromatographic Data Acquisition System.

3.2.5 Reagents --

Use ACS reagent grade chemicals for the preparation of all solutions. Dry chemicals used for the preparation of calibration standards at 105°C for 2 hours and cool in a dessicator immediately before use.

Eluent, 0.0017M $NaHCO_3$/0.0018M Na_2CO_3: Dissolve 2.8562 g $NaHCO_3$ and 3.8156 g Na_2CO_3 in 20 liters deionized water.

Regenerant, 0.025N H_2SO_4: Add 500 mL 1N H_2SO_4 to a Nalgene Carboy and dilute to 20L with deionized water.

Mixed Stock Solution, 1000 mg/L NO_2^-, NO_3^-, and SO_4^{2-}, and 200 mg/L Cl^-: Dissolve 1.4998 g $NaNO_2$, 1.6305 g KNO_3, 1.8142 g K_2SO_4, and 0.3297 g NaCl in 1 liter deionized water.

Standard Solution A: Dilute 10 mL mixed stock solution to 100 mL with eluent (100 mg/L NO_2^- NO_3^-, and SO_4^{2-}, and 20 mg/L Cl^-).

Standard Solution B: Dilute 10 mL standard solution A to 100 mL with eluent (10 mg/L NO_2^-, NO_3^-, SO_4^{2-}, and 2 mg/L Cl^-).

Using standard solutions A and B, prepare standards with eluent in 100 mL volumetric flasks as shown in Table 1. Preparation of standards in eluent eliminates the water dip which interferes with chloride quantitation. Prepare fresh standards weekly.

3.2.6 Procedure --

1) Begin the flow of regenerant through the anion micromembrane suppressor column.

2) Set up the range for maximum sensitivity (usually 10 μmho full scale for NPS samples).

TABLE 1. PREPARATION OF ANION CALIBRATION STANDARDS

Standard	NO_2, NO_3, SO_4 mg/L	Cl^- mL mg/L	mL Standard Solution/100 mL
		STANDARD SOLUTION A	
1	10	2.0	10.0
2	5	1.0	5.0
3	3	0.6	3.0
4	2	0.4	2.0
		STANDARD SOLUTION B	
5	10	0.2	1.0
6	5	0.1	0.5
7	2	0.04	0.2
8	1	0.02	0.1

NOTE: Higher concentration standards can be prepared from Standard Solution A or the mixed stock solution if needed.

TABLE 2. RECOMMENDATIONS FOR OPTIMUM INSTRUMENT SENSITIVITY

DIONEX

1. 0.0017M $NaHCO_3$/0.0018M Na_2CO_3 eluent with fast run separator and suppressor.
2. Detector output range 10 μmho full scale.
3. 100 mL injection loop
4. Flow rate 2.3 mL/min.

3) Begin to pump the eluent through the columns and allow baseline to stabilize.

4) Arrange calibration standards and samples to be analyzed. If the conditions suggested in Table 2 are used, an average of 5 samples can be analyzed per hour. Analyze a quality control sample first, using a single standard, to verify that the instrument is operating properly. If the observed value of any anion differs by more than 10% from the known value, find and correct the problem before analyzing any samples.

5) Using a disposable Nalgene syringe fitted with a 0.45 μm disposable filter, begin to inject the field samples. Record on the Analysis Logsheet (Figure 2) the computer directory name for storing the chromatograms, the NPS sample ID, and the filename assigned to the chromatogram for that sample. Record the date of analysis and the IC Model Number on the Sample Log Form. Analyze one randomly selected sample in duplicate. If any sample produces an anion peak that is offscale, indicate this on the Analysis Logsheet and the Sample Log Form. Place the sample in a separate rack for later analysis using a higher detector output range (usually 100 μmho full scale).

6) When approximately half of the day's samples have been run, perform the daily calibration beginning with the standard of highest concentration. Record the standard ID and filename on the Analysis Logsheet.

7) Complete the analysis of the field samples, including an EPA Quality Assurance sample and a quality control sample.

3.2.7 Calculations Using A Linear Least Squares Fit --

Peak heights are entered into the computer where linear least squares calculations are performed. The linear least squares fit yields the following parameters: slope (s), intercept (I), and correlation coefficient (r). The slope and intercept define a relationship between the concentration and the instrument response of the form.

$$y_i = sx_i + I \qquad (1)$$

where:

y_i is the predicted instrument response

x_i is the concentration of standard i.

s is the response slope

I is the intercept

Directory: MAX\DATA________ Date: _____

Method name: _____ Analyst: _____

Data Copied (date): _____ IC Model No.: _____

Diskette No.: _____ Project No.: _____

Data Deleted (date): _____

Sample ID	Filename	Comments

Figure 2. Analysis Logsheet.

Rearrangement of Equation 1 yields the concentration corresponding to an instrumental measurement:

$$x_j = (y_j - I)/s \qquad (2)$$

where:

x_j is the calculated concentration for a sample
y_j is the actual instrument response for a sample
s is the calculated slope from the calibration above
I is the calculated intercept from the calibration above

3.2.8 Quality Control --

Compare the regression parameters for the standard curve with those obtained in the past. If they exceed the control limits, stop analysis and look for the problem.

Analyze a quality control sample against a single calibration standard at the beginning of every analytical run. Compare the results with those obtained in the past. If the observed concentration of any anion differs from the known value by greater than 10%, stop the analysis until the problem is found. Analyze a duplicate sample and an EPA Quality Assurance Sample each day.

When a new stock standard solution is prepared, dilute calibration standards from both the old and the new stock. Analyze the old and new standards and compare the calibration curves.

3.2.9 Troubleshooting --

Refer to the Dionex Model 2120i or Model 14 Operators' Manual for any instrumental problems.

4.0 QUALITY ASSURANCE PROCEDURES

The role of any analytical laboratory is to provide qualitative and quantitative data which accurately describe the characteristics and/or concentrations of the constituents in the samples submitted. The laboratory data must be backed up by an adequate program to document the proper control of all the factors which affect the final result. RTI is committed to the implementation

of a thorough and dependable quality assurance/quality control program which is understood and followed by all operating personnel and supported by management.

4.1 Project Organization and Responsibility

QA project organization is shown in Figure 3. Dr. W. F. Gutknecht, Project Manager, provides overall supervision of the project. Dr. E. D. Estes, Project Leader, is responsible for the analyses conducted during the study and for data reporting. Dr. W. C. Eaton serves as the program's Quality Assurance Officer. Ann R. Turner is the sample custodian and analyst.

4.2 QA Objectives for Measurement Data in Terms of Precision, Accuracy, Completeness, Representativeness, and Comparability

The filter samples collected in this study are analyzed for the parameters summarized in Table 3. The methods used for these measurements also are summarized in the table.

4.2.1 Precision and Accuracy --

Precision and accuracy objectives for each of the analyses are listed in Table 1.

4.2.2 Completeness --

Analytical results will be obtained for at least 98 percent of the filters.

4.2.3 Representativeness --

All filter samples are collected by the PMCC/NPS which is solely responsible for the representativeness of the samples.

4.2.4 Comparability --

All analyses for a given parameter are reported in the same units and are directly comparable.

4.3. Sampling Procedures

Sampling is the responsibility of PMCC/NPS which is expected to provide representative filter samples.

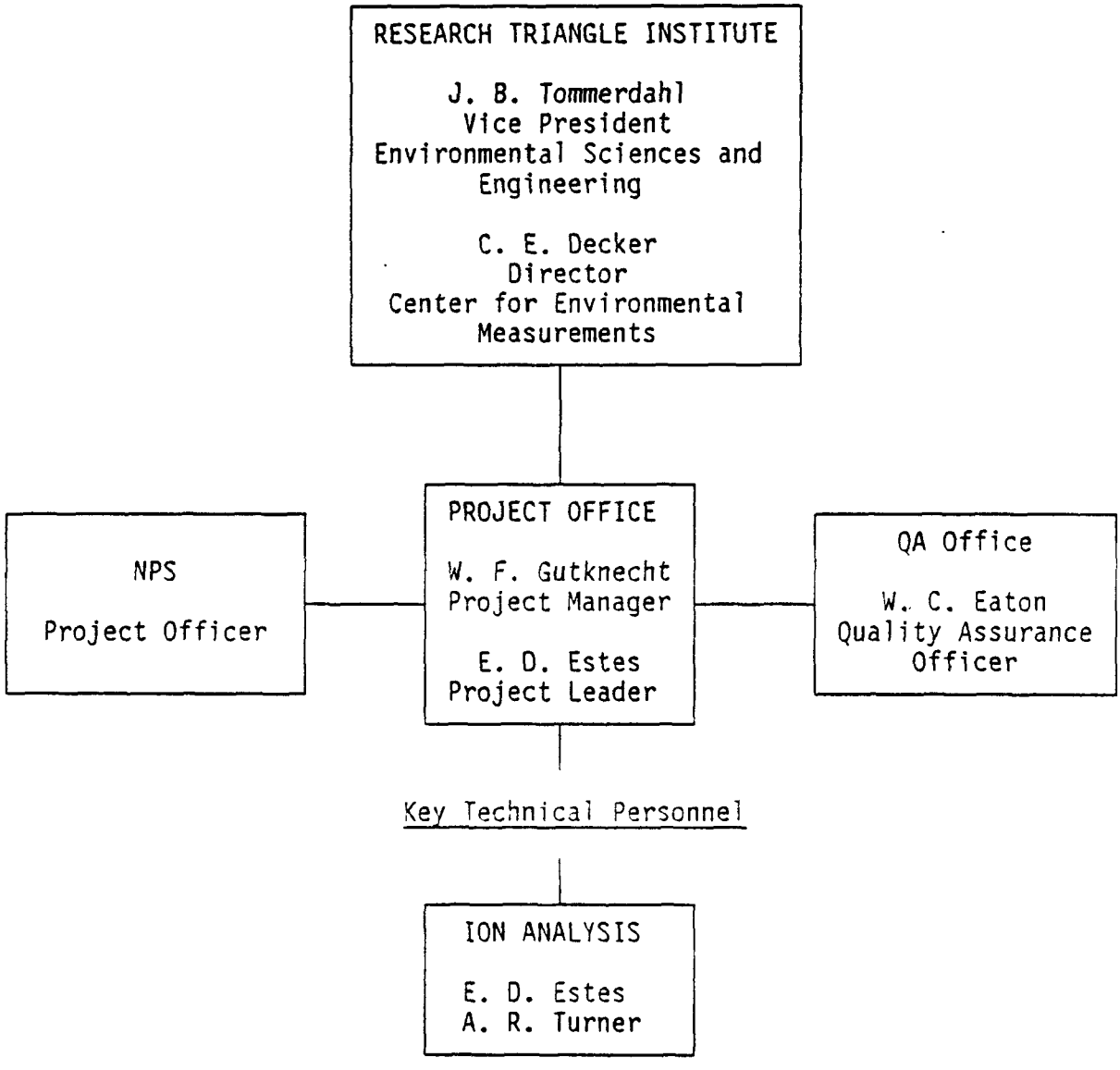

Figure 3. Project Management Structure

TABLE 3. PHYSICAL/CHEMICAL PARAMETERS AND METHODS FOR ANALYSIS

Parameter	Unit of Report	Recommended Method[a]	Range of Parameter	Estimated Precision	Estimated[b] Accuracy
Cl^-	mg/L	IC	0.03 - 7.5	± 10%	± 10%
NO_2	mg/L	IC	0.02 - 1.0	± 10%	± 10%
NO_3	mg/L	IC	0.002 - 27	± 10%	± 10%
SO_4^{2}	mg/L	IC	0.02 - 22	± 10%	± 10%

a IC - ion chromatography

b These values assume concentrations which equal or exceed 100 times the minimum detectable limit (MDL). For concentrations at the MDL, measurements are accurate to within ± 100%. At concentrations equal to 10 times the MDL, accuracy is within ± 20%.

4.4 Sample Custody

Ann R. Turner is the RTI sample custodian and analyst and is responsible for maintenance of a laboratory sample custody log. As samples are received in the laboratory and processed, the following information is entered onto the Sample Log Form.

1) Date samples received in laboratory

2) PMCC/NPS sample identification number

3) Date of desorption

4) Date of ion analysis and instrument used

4.5 Calibration Procedures and Frequency

Calibration procedures and frequency for individual measurements are included in Section 3.0 Sample Analysis Methodology.

4.6 Analytical Procedures

Analytical procedures are found in Section 3.0 Sample Analysis Methodology.

4.7 Data Reduction, Validation, and Reporting

Data reduction schemes are contained in the methods presented in Section 3.0.

Data entries are reviewed by the Quality Assurance Officer who checks calculations and verify completeness of data. Relative standard deviations and relative errors are calculated from analyses of replicates and quality control/quality assurance samples, respectively. If precision and accuracy fall outside the data quality objectives summarized in Table 3, analyses are repeated.

Laboratory notebooks are checked and signed by the Quality Assurance Officer and then reviewed and signed by the Project Leader. Notebooks and data sheets are available for review by the Quality Assurance Officer. Analytical results for each filter lot, including QC/QA data, are compiled by the Project Leader and presented to the Quality Assurance Officer. Upon approval of the Quality Assurance Officer, the data are submitted to the NPS.

4.8 Internal Quality Control Checks

Each day of analysis, a quality control sample, a duplicate sample, and a quality assurance sample are analyzed. Filter blanks are analyzed as they are supplied by the PMCC.

4.8.1 Filter Blank --

This is a blank filter supplied by the PMCC which is subjected to the same preparation procedure as are the field samples being analyzed. This sample will be used to check for contamination which may occur in sample preparation or analysis.

4.8.2 Duplicate Sample --

This is a sample chosen at random from a day's run. This sample provides information on analytical precision.

4.8.3 Quality Control Sample --

This sample is prepared by the Project Leader from stock solutions independent of those used to prepare the calibration standards. It is analyzed at the beginning of each run to ensure that the chromatograph is operating properly. If the observed value of any anion deviates from the known value by more than 10%, no samples are analyzed until the problem is corrected.

4.8.4 Quality Assurance Sample --

This sample is an EPA Quality Assurance sample with known values of the constituents. The data are reported to the Project Leader who calculates percentage recovery and reports the data to the analyst and to the Project Manager. This sample provides an assessment of data quality independent of analyst's judgement.

4.9 Preventive Maintenance

Analytical instrumentation used in this project will be carried through preventive maintenance procedures and schedules as recommended by the manufacturer.

Dionex Ion Chromatographs require a minimum of maintenance if operated at pressures less than 800 psi. During the following periods, perform the maintenance listed to eliminate unnecessary troubleshooting.

Daily (all operating days):

- Check for leaks at all valves and column fittings (at normal operating pressure).
- Cycle the injection valve by repeated switching between INJECT and LOAD and rinse with DI H_2O.
- Check the meter Zero and Cal adjustments.
- Wipe-up liquid spills and salted-out chemicals.
- Check the drip trays.

Weekly:

- Compare standard chromatograms to check that no significant changes in column efficiency have occurred.
- Check all air and liquid lines for crimping or discolor.

Monthly:

- Check column resolution by measuring percent resolution of the NO_3^- and $SO_4^=$ peaks.
- Oil each pump with 2 drops SAE No. 10 oil.

5.0 DATA REPORTING PROCEDURES

The data from the analysis of each lot of filters are reported to the National Park Service both in hard copy and on floppy disk in ASCII format. The data are grouped according to the day of analysis and the instrument (Model 2120i or 14) on which they were run. With each filter lot, quality control (QC) and quality assurance (QA) data are reported for each instrument, for each day that samples were analyzed. Reporting of QC/QA data in this manner facilitates the detection and correction of any instrument-specific problems. Data from the analysis of daily duplicate samples are compiled and periodically reported to the NPS so that precision estimates can be made.

APPENDIX 7: Carbon Contractor Procedures (DRI)

Title: Thermal/Optical Carbon Analysis of Aerosol Filter Samples

Page 1 of ___

Number: 2-204.1

Date: 5/2/89

1.0 GENERAL DISCUSSION

1.1 Purpose of Procedure

This standard operating procedure is intended:

- to provide a basic understanding of the principles behind carbon analyzer operation;
- to describe routine determination of organic, elemental, and carbonate carbon from ambient and source filter samples using the OGC/DRI thermal/optical reflectance carbon analyzer;
- to detail the concerns and procedures which will insure a state-of-the-art carbon analysis measurement process.

This procedure will be followed by all analysts at the Environmental Analysis Facility of the Energy and Environmental Engineering Center of the Desert Research Institute.

1.2 Measurement Principle

The OGC/DRI thermal/optical carbon analyzer is based on the preferential oxidation of organic and elemental carbon compounds at different temperatures. It relies on the fact that organic compounds can be volatilized from the sample deposit in a helium (He) atmosphere at low temperatures while elemental carbon is not oxidized and removed. The analyzer operates by 1) liberating carbon compounds under different temperature and oxidation environments from a small punch taken from a quartz fiber filter; 2) converting these compounds to carbon dioxide (CO_2) by passing the volatilized compounds through an oxidizer (heated manganese dioxide, MnO_2); 3) reduction of CO_2 to methane (CH_4) by passing the flow through a methanator (hydrogen-enriched nickel catalyst); and 4) quantification of CH_4 equivalents by a flame ionization detector (FID).

The principal function of the optical (laser reflectance) component of the analyzer is correction for pyrolysis of organic carbon compounds to elemental carbon. Without this correction, the organic carbon fraction of the sample would be underreported and the elemental carbon fraction would include some pyrolyzed organic carbon. The correction for pyrolysis is made by continuously monitoring the filter reflectance (via a helium-neon laser and photodetector) throughout an analysis cycle. This reflectance, largely dominated by the presence of black elemental carbon, decreases as pyrolysis takes place and increases as elemental carbon is liberated during the latter part of the analysis. By monitoring the reflectance, the portion of the elemental carbon peak corresponding to pyrolyzed organic carbon can be accurately assigned to the organic fraction. The correction for pyrolytic conversion of organic to elemental carbon is essential for an unbiased measurement of both carbon fractions, as discussed in Johnson et al.

(1981).

Carbonate carbon may be determined by measuring the CO2 evolved upon acidification of the sample punch before the normal carbon analysis procedure.

1.3 Measurement Interferences and Their Minimization

Carbonate carbon presents significant interference in carbon analysis if it consititutes more than 5% of total carbon in the ambient or source sample, as it is measured as both organic and elemental carbon during thermal/optical carbon analysis. Acid pretreatment of the filter samples can eliminate the carbonate interference.

The presence of certain minerals in some soils can affect the laser correction for pyrolysis. These minerals change color as the sample punch is heated, generally resulting in a sample which is darker. For samples which contain large fractions of resuspended soils, the split between organic and elemental carbon may have to be estimated manually.

Some minerals, again predominantly in soil samples or soil dominated samples, may affect the laser reflectance by temporarily changing color or changing the surface texture of the deposit residue. Unlike the effect described above, these changes are reversible and highly temperature dependent.

Some colored organic compounds can affect the laser correction as well, causing increased reflectance as these compounds are removed. This effect is readily ascertained by examining the laser response during the organic portion of the analysis. Again, the split between organic and elemental carbon may have to be estimated manually if the effect is large.

Finally, the presence of certain elements (Na, K, Pb, Mn, V, Cu, Ni, Co, and Cr) existing either as contaminents on the filter or as part of the deposit material has been shown to catalyze the removal of elemental carbon at lower temperatures (Lin and Friedlander, 1988). Such catalysis would affect the distribution of carbon peaks during the analysis.

1.4 Ranges and Typical Values of Measurements

A wide range of aerosol concentrations can be measured with this method, the limiting factor being the concentration of the carbon compounds on the filter on a ug/cm2 basis. Dirtier environments may be sampled and still be analyzed within the range of the carbon analyzer by increasing the filter deposit area or by decreasing the flow through the filter media.

The carbon analyzer can effectively measure between 0.2 and 750 ug carbon/cm2. The upper range is somewhat arbitrary, depending on the particular compounds on the filter and the temperatures at which they evolve. This upper range may be extended by taking special precautions, such as reducing the punch size or by special temperature programming, to avoid an over-range FID signal.

Typical carbon values range between 10 and 100 ug carbon/cm2 for ambient samples.

The lower quantifiable limits (LQLs) of carbon combustion methods depend upon the variable carbon content of the blank quartz filters as well as the analysis method. For better LQLs, the unexposed filters should be pre-fired in an oven at high temperatures for several hours to remove any residual carbon contamination (Fung, 1986; Huntzicker, 1986; Rau, 1986). All quartz filters originating from DRI are pre-fired for a minimum of four hours at 900 C and are tested for blank levels before use. For well-cleaned quartz filters, the standard deviation of the blanks for organic and elemental carbon is on the order of 0.5 and 0.2 ug/cm2, respectively (Fung, 1986). Typical pre-fired blank levels at DRI are 0.5 - 1.0 ug organic carbon/cm2 and 0.0 - 0.2 ug elemental carbon/cm2. Because even pre-fired filters can absorb organic vapors during shipping and storage, the LQL of analysis on a particular set of filters depends on the number of field blanks analyzed and the variability in the results from those blanks.

Acid-evolved carbonate levels in pre-fired quartz filters have been shown in several informal tests at DRI to be quite variable over time. Part of this phenomenon is apparently due to the reaction of ambient CO2 with alkaline sites on the quartz fibers. Acceptance testing for carbonate is not routinely performed at DRI.

The precision of this analysis has been reported to range from 2 to 4% (Johnson, 1981). For analysis of actual ambient and source filters, homogeniety of the deposit is most important for reproducible results. For evenly loaded filters, precision is generally 5% or less; for poorly loaded filters, replicates may deviate by as much as 30%. The precision of carbonate analysis results is approximately 10%.

The precision of the laser-dependent split between organic and elemental carbon fractions depends upon how rapidly the laser is increasing at the time of the split and whether the split is made in the middle of a carbon peak or not. Typically, relative laser split times are reproducible within 10 seconds and deviations in calculated splits are less than 5% of the total measured carbon.

The accuracy of the thermal/optical reflectance method for total carbon determined by analyzing a known amount of carbon is between 2 to 6% (Rau, 1986). Accuracy of the organic/elemental carbon split is between 5 and 10%.

1.6 Personnel Responsibilities

All analysts in the laboratory should read and understand the entire standard operating procedure prior to performing carbon analysis, which includes routine system calibration, actual analysis, and immediate review of the data as it is produced to correct system problems.

It is the responsibility of the laboratory manager or supervisor to ensure the carbon analyses procedures are properly followed, to examine and document all replicate, standard, and blank performance test data, to designate samples for reanalysis, to arrange for maintenance and repair, to maintain the supplies and gases necessary to insure uninterrupted analysis, and to deliver the analysis results in dBase format to the project manager within the specified time period.

The quality assurance (QA) officer of DRI's Energy and Environmental

Engineering Center is responsible to determine the extent and methods of quality assurance to be applied to each project, to estimate the level of effort involved in this quality assurance, to update this procedure periodically, and to ascertain that these tasks are budgeted and carried out as part of the performance on each contract.

1.7 Definitions

The following terms are used in this document:

Calibration injection - the injection of calibration gases (methane in helium [CH_4/He] or carbon dioxide in helium [CO_2/He]) into the sample stream to check instrument performance.

Calibration peak - the FID peak resulting from the automatic injection of methane calibration gas (CH_4/He) at the end of each analysis run. All integrated peak areas are divided by the calibration peak area and multiplied by an instrument-specific calibration factor to obtain ug carbon.

Elemental carbon - carbon evolved from the filter punch in a helium/oxygen (He/O_2) atmosphere at 550, 700, and 800 C minus pyrolyzed organic carbon.

Laser split - the time at which the laser-measured reflectance of the filter punch reaches its initial value, indicating that all pyrolyzed organic carbon has been removed and original elemental carbon is beginning to evolve.

Lower split time - the time at which the laser-measured reflectance of the filter punch reaches its initial value minus the precision of the laser signal (currently defined as 10 counts).

Organic carbon - carbon evolved from the filter punch in a He atmosphere at 120, 250, 450, and 550 C plus pyrolyzed organic carbon.

Pyrolysis - the conversion of organic carbon compounds to elemental carbon due to incomplete combustion/oxidation; may be envisioned as "charring".

Pyrolyzed carbon - the carbon evolved from the time that the carrier gas flow is changed from He to He/O_2 at 550 C to the time that the laser-measured filter reflectance reaches its initial value.

Upper split time - the time at which the laser-measured reflectance of the filter punch reaches its initial value plus the precision of the laser signal (currently defined as 10 counts).

1.8 Related Procedures

SOP's related to carbon analysis activities which should be reviewed in conjunction with this document are:

DRI SOP #6-001.1 Shipping and Mailing Procedures.

DRI SOP #6-009.1 Field and Laboratory Safety Procedures.

any SOP's dealing with filter handling and shipping in conjunction

DRI SOP #4-001.1 Creation, Revision, Distribution, and Archiving of Standard Operating Procedures.

DRI SOP #_____ Pre-Firing of Quartz Filters for Carbon Analysis

The maintenance and troubleshooting guide for the DRI/OGC carbon analyzer.

The appropriate MS-DOS or PC-DOS manual for the computer used with the carbon analyzer.

2.0 Apparatus, Instrumentation, Reagents, and Forms

2.1 Apparatus and Instrumentation

2.1.1 Description

The components of the DRI/OGC thermal/optical carbon analyzer are depicted in Figures 1 and 2; the complete gas flow schematic is shown in Figure 3. The programmable combustion oven is the heart of the carbon analyzer and includes loading, combustion, and oxidation zones in a single quartz "oven" as depicted in Figure 4.

In addition to the DRI/OGC thermal/optical analyzer connected to a IBM-PC or compatible computer, the following items are needed for routine carbon analysis:

- Punch: 0.503 cm2 area for removing small sample punches from quartz filters. This punch needs to be kept clean and sharp. If the punch is sharpened, the punch area must be reverified.
- Syringes: a gas-tight 1000 or 2500 ul syringe for calibration injections; 25 or 50 ul syringe for carbonate analysis and for analyzer calibration.
- Quartz filters: Pallflex 2500QAT-UP or equivalent.
- Tweezers.
- Glass petri dish.
- Log book/notebook.
- Transparent tape.
- Kimwipes.
- Small styrofoam cooler.
- Blue ice.
- A copy of Carbon.EXE (the analysis program), version P2.1 or later, and Carbon.DAT (the analysis parameter file), version D2.0 or later.

2.1.2 Instrument Characterization

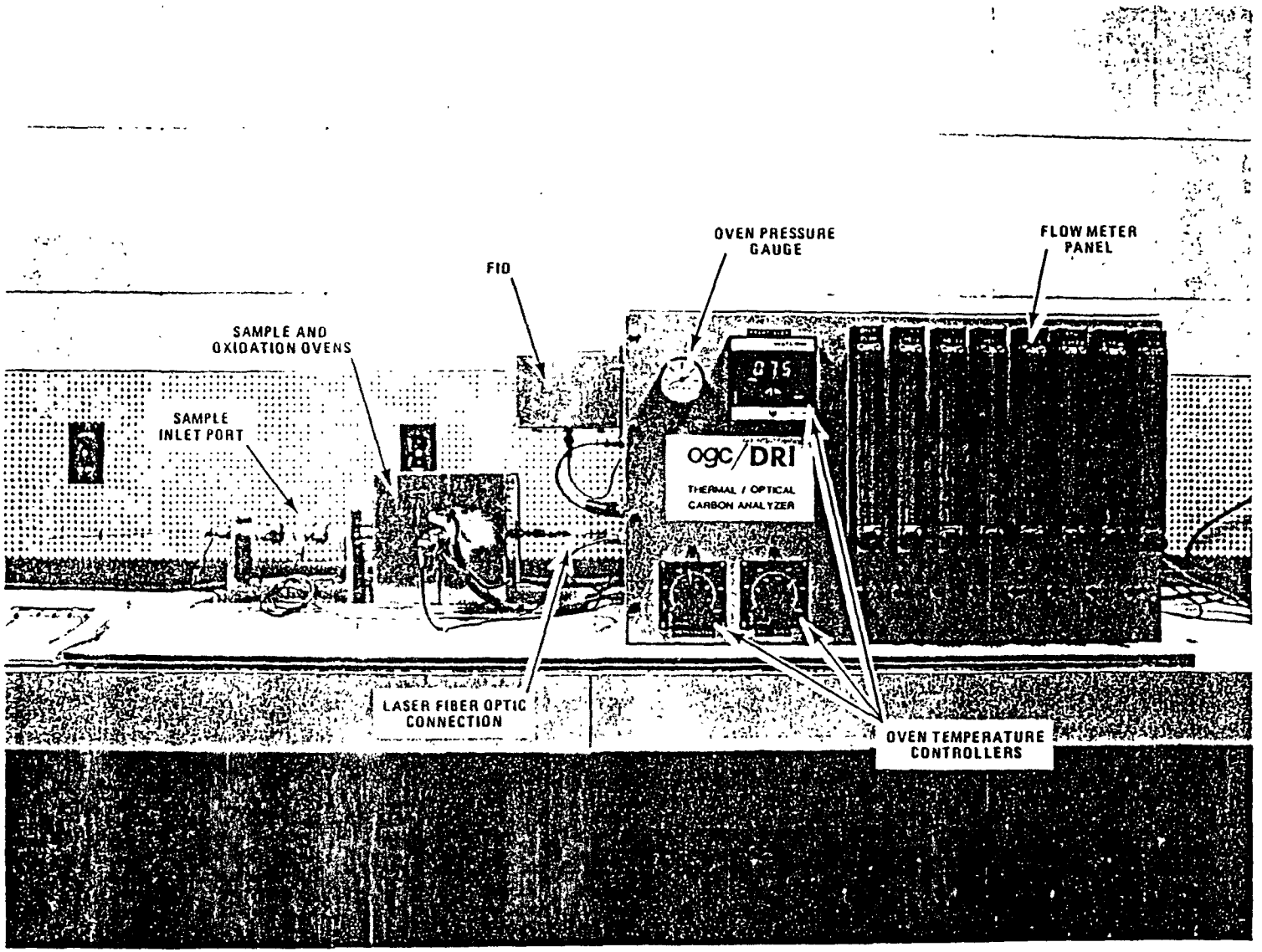

Figure 1. OGC/DRI Thermal/Optical Carbon Analyzer

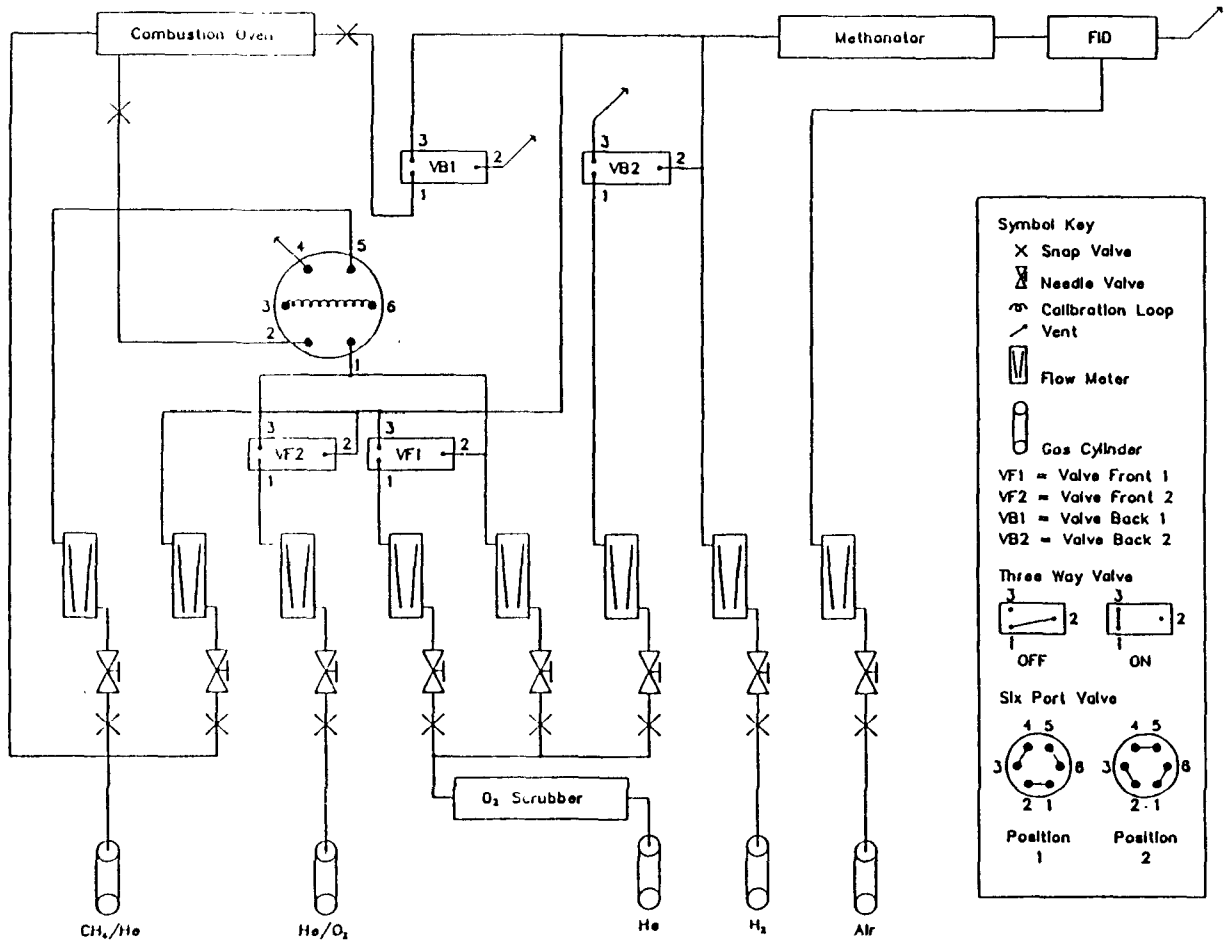

Figure 3. OGC/DRI Thermal/Optical Carbon Analyzer Gas Flow Diagram

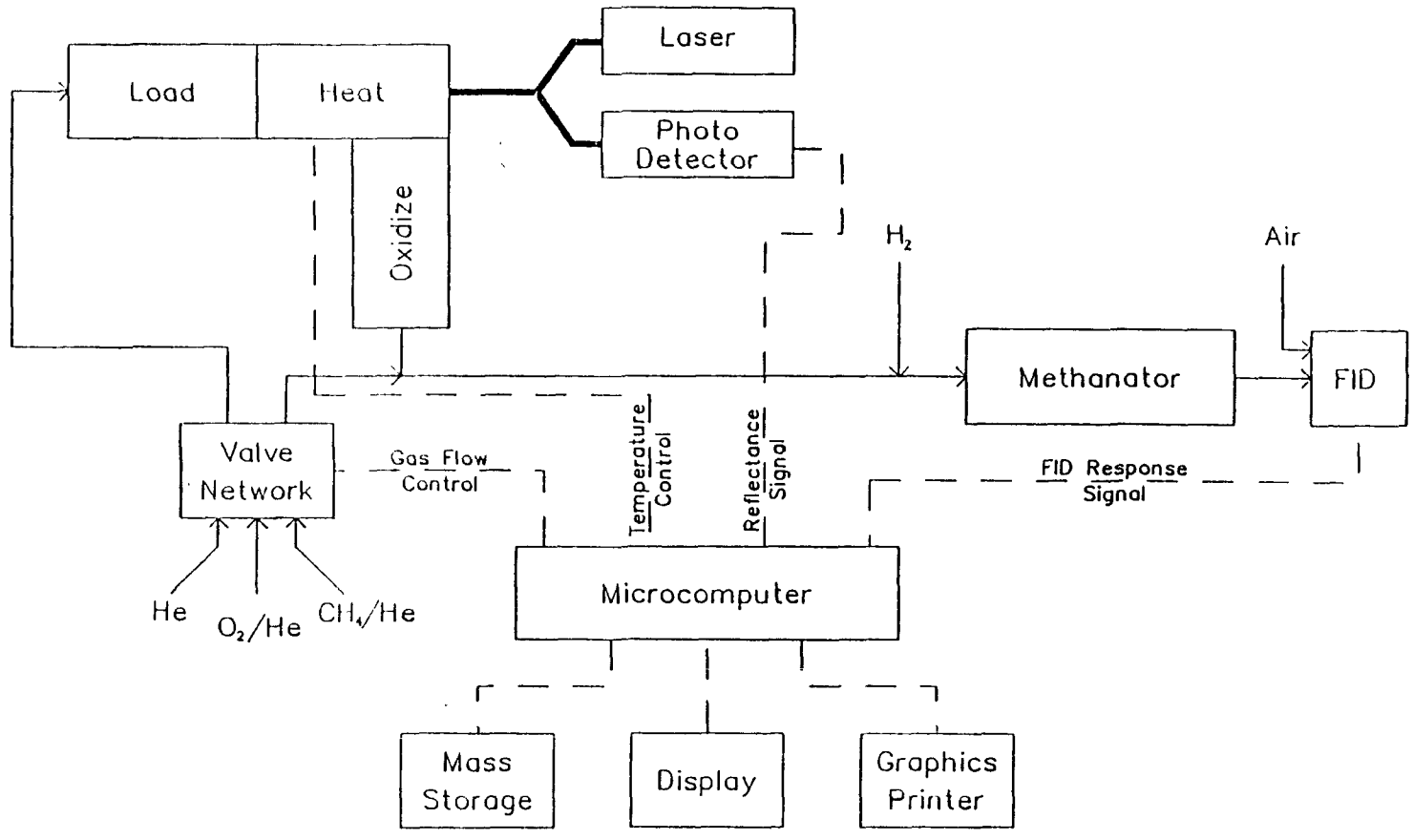

Figure 2. OGC/DRI Thermal/Optical Carbon Analyzer Block Diagram

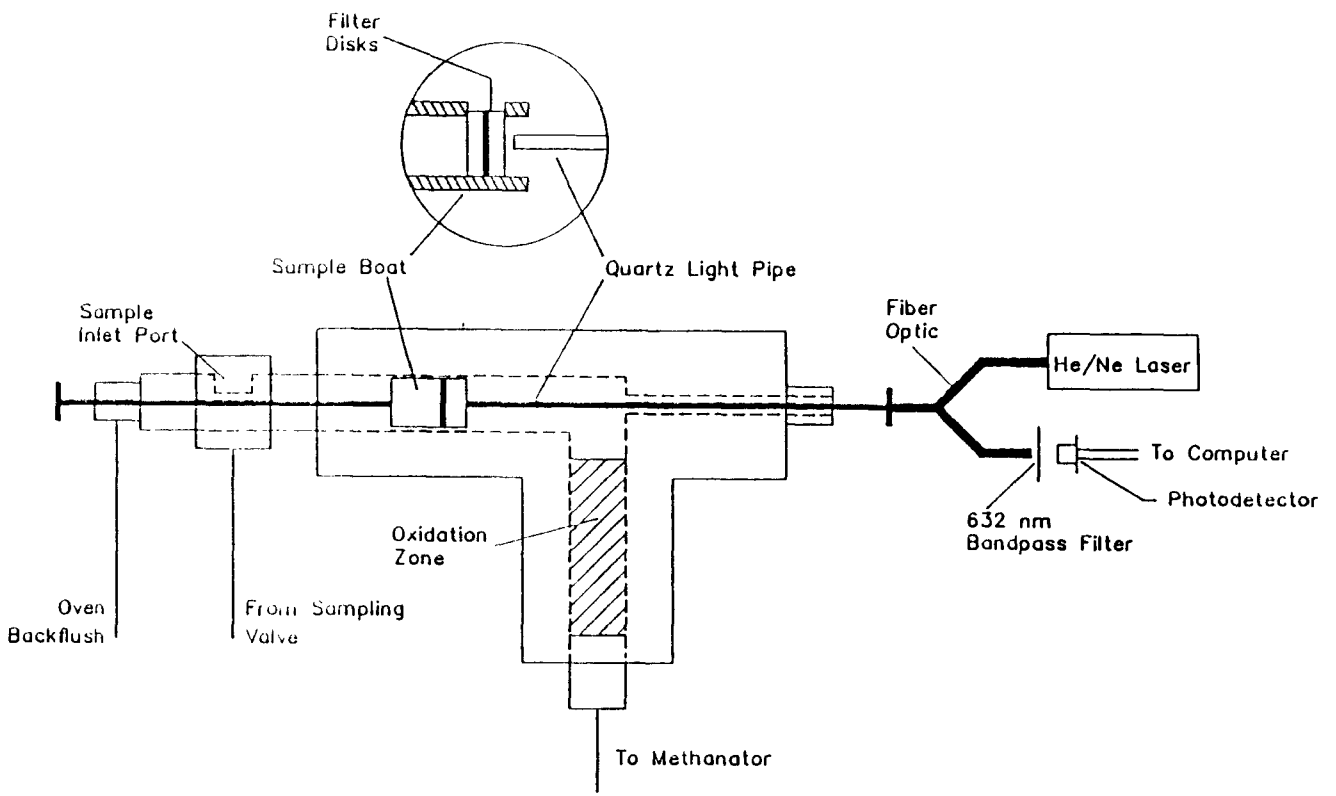

Figure 4 OCG/DRI Thermal/Optical Carbon Analyzer Combustion Oven

[illegible] analyzer is program-driven and data is stored automatically to disk via an IBM-PC compatible computer. Response times and signal lag times are built into the parameter file which is loaded when the analysis program begins. The program is event-driven; that is, when the FID signal returns to its baseline after a minimum of 80 seconds at one condition, the program will advance to the next temperature or carrier gas mixture. A maximum time limit per condition is also established to prevent a slight baseline drift from holding the analyzer in one condition indefinitely.

This method requires no sample pretreatment, requires between 15 and 70 minutes per sample, and destroys the sample.

Operator concerns for correct routine operation of the instrument should be the following (refer to section 4 for more details):

- Remember to push to sample in when the tone sounds; DO NOT leave the room until the analysis begins.
- Insure that the thermocouple is physically decoupled from the sample boat after pushing in the sample to prevent oven temperature from influencing the laser reflectance signal.
- Insure that the sample port is tight after loading a sample punch.
- Check the graphical printout after each analysis run to insure that the FID, temperature, and laser signals are behaving as expected.
- The analyzer's quartz oven is susceptible to breakage, especially at the sample port. Care should be taken to avoid exerting tangential pressure on the oven when manipulating the sample port fitting.

2.1.3 Maintenance

Regular maintenance for the analyzer involves daily checking of compressed gas supplies, cleaning the punch and tweezers between each sample, and backing up data files on a regular basis. Checks of laser adjustments (physical and electrical) are made at least monthly; analyzer calibrations are performed every six months. All calibrations and repairs must be recorded in the log book.

Refer to the maintenance and troubleshooting guide for additional information.

2.1.4 Spare Parts

It is strongly recommended that the following spare parts be kept on hand to insure minimal interruptions in analysis:

- Quartz rods: 3 mm nominal diameter, Homosil optical quality rod, available from GM Associates (Oakland) cut to 9 3/4" lengths and polished on both ends.
- Quartz ovens: specially built ovens by the Oregon Graduate Center glass blower.
- Quartz boats: made in-house from scraps of broken ovens.
- Thermocouple rods: 18" length by 1/8" OD, type K ground isolated

with 314 stainless steel sheaths (Marchi Associates, #SDH175).

- FID flame tips: for Gow-Mac #12-800 FIDs (Gow-Mac, #132-117).
- Fuses: 15 A, MDL 15, slow-blow.
- Punches: smaller than the 0.503 cm2 punch normally used, for excessively heavily loaded samples.
- Septa: 1/4" and 1/8", for injection ports.
- Replacement needles for syringes.
- Replacement scrubber tube: Supelco oxygen scrubber (Supelco, #2-2396).
- Stainless steel wire: for forming "ears" to hold the sample boat in position and for wrapping the "ears" onto the thermocouple push rod (Rocky Mountain Orthodontics, #RMO E-19, 0.914 mm).
- Quartz wool: for repacking the oxygen oven (Alltech Associates, #4033).
- Teflon ferrules: Parker or Swagelok style, 1/2" ID, for the sample port fitting.
- Teflon ferrules: 1/2" OD by 1/8" ID, for the thermocouple rod at the back of the oven.
- Heating element for oven: custom made 650 W coiled heater (Marchi Associates #SDH175).
- FID batter: 300 VDC (EDCO, EverReady #495).
- Printer paper.
- Printer ribbons.
- Computer disks, double side, double density.

2.2 Reagents

The following chemicals should be reagent grade or better:

- Potassium hydrogen phthalate (KHP), for calibration use (Fisher, #P-243).
- Sucrose, for calibration use (EM Science, #SX1075-1).
- Manganese dioxide (MnO_2), crystalline, as an oxidizer in the oxygen oven (Nurnberg Scientific, #RM200).
- Hydrochloric acid (HCl), 0.4 molar solution, for use in cleaning punch and quartz ovens, and for use in carbonate analysis.
- Distilled dionized water (DDW): total carbon background should be 6 ppm or less.

2.3 Gases

The following compressed gases should be zero grade or better:

- Helium for a carrier gas, regulated to 35 psi with a metal diaphragm regulator. The higher pressure is required due to the pressure drop across the Supelco oxygen scrubber.

- 5% methane by volume in helium for calibration injections and calibration peaks; regulated to 10 psi by a metal diaphragm regulator.

- 5% carbon dioxide by volume in helium for calibration injections; regulated to 10 psi by a metal diaphragm regulator.

- 10% oxygen by volume in helium as a carrier gas, regulated to 10 psi by a metal diaphragm regulator.

In addition, the following gases are required:

- Hydrogen for the FID flame, regulated to 10 psi with a metal diaphragm regulator.

- Compressed air to supply oxygen to the FID, regulated to 10 psi by a metal diaphragm regulator.

At least one backup cylinder per gas type should be kept on hand at all times. The calibration gases typically last for one year. The hydrogen, helium, and O2/He mixture are typically replaced every three to five weeks. The compressed air is replaced every 4 to 5 days. All gases are replaced when the cylinder pressure drops below 500 psi.

2.4 Forms and Paperwork

All samples are logged into the "Air Analysis Logbook" upon receipt at the laboratory. Refer to Figure 5 for the format of this logbook. A sample analysis list will be prepared by the laboratory manager indicating which samples will be analyzed and any special instructions. Samples designated for carbon analysis are logged into the "Carbon Analysis Logbook" prior to analysis; Figure 6 provides a sample of entries in this logbook.

As individual samples are analyzed, entries are made in the "Carbon Analyzer Logbook", as shown in Figure 7. As each analysis run is completed, the sample analysis list is marked with the date and analyzer number, as in Figure 8.

3.0 Calibration Standards

3.1 Preparation, Ranges, and Traceability of Standards

Four standards are used in calibrating the carbon analyzers: 5% nominal CH_4 in He, 5% nominal CO_2 in He, KHP, and sucrose. Only the calibration gases are used on a daily basis as analyzer performance monitors. KHP and sucrose are used in conjunction with the two gases semiannually to establish the calibration curve of each analyzer.

The calibration gases are assayed for exact concentrations by the gas supplier; the assay value is obtained from the tag on the cylinders and is typically determined by gas chromotography (GC) or gravimetry.

Project	Date Rec'd	By	Due Date	Sample ID	# Samples	Analysis	Comments
IMPROVE	3/2/89	BHQ		Lot U	481 NPS 14 NESCAUM	OC/EC	
IMPROVE	4/7/89	BHQ		Lot W	470 NPS 27 NESCAUM	OC/EC	
IMPROVE	4/25/89	BHQ		Lot X	482 NPS 18 NESCAUM	OC/EC	

Figure 5. Air Analysis Logbook Format

890425

IMPROVE LOTG

P00855-1
P00856-1
P00857-1
P00858-1 Off center
P00859-1
P00860-1
P00858-2(A)

HI0425-1 19.8 / 29394

890426 PA

STARTUP ① leak test ok
② MI0426-1 28970 21.7

IMPROVE LOTG

P00881-1
P00882-1
P00874-2(R) Replicate for #2 machine
P00883-1
P00884-1 Upside down in disk / light area opp edges
P00885-1 light area opp edges
P00886-1
P00887-1
P00888-1
P00889-1 light area around edges, Drain disk thrown away
P00890-1 Drain disk thrown away, light area around edges
P00874-2(R)
P00911-1 light area around edges

CI0426-1 21.1 / 28981

890427 PA

STARTUP ① leak test ok
② CI0427-1 29229 / 20.8

Figure 6. Example of Carbon Analysis Logbook Format

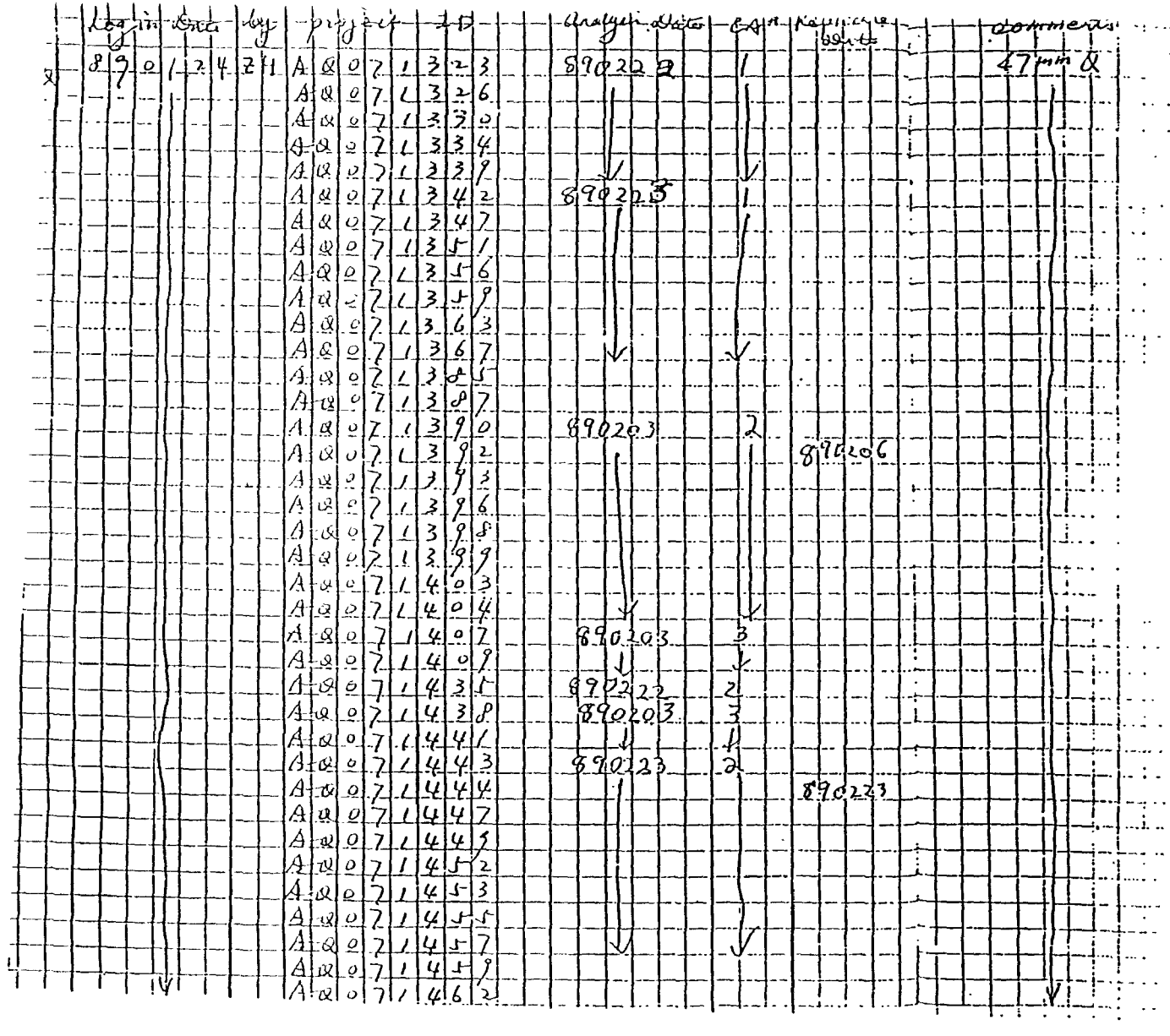

Log in Date by	project	ID	Analysis Date	Run	Replicate Boats	Comments
890124 21	AQ07	1323	890222	1		47mm Q
	AQ07	1326				
	AQ07	1330				
	AQ07	1334				
	AQ07	1339				
	AQ07	1342	890223	1		
	AQ07	1347				
	AQ07	1351				
	AQ07	1356				
	AQ07	1359				
	AQ07	1363				
	AQ07	1367				
	AQ07	1375				
	AQ07	1387				
	AQ07	1390	890203	2	890206	
	AQ07	1392				
	AQ07	1393				
	AQ07	1396				
	AQ07	1398				
	AQ07	1399				
	AQ07	1403				
	AQ07	1404				
	AQ07	1407	890203	3		
	AQ07	1409				
	AQ07	1435	890222	2		
	AQ07	1438	890203	3		
	AQ07	1441		4		
	AQ07	1443	890223	2		
	AQ07	1444			890223	
	AQ07	1447				
	AQ07	1449				
	AQ07	1452				
	AQ07	1453				
	AQ07	1455				
	AQ07	1457				
	AQ07	1459				
	AQ07	1462				

Figure 7. Example of Carbon Analyzer Logbook Format

IMPROVE: Lot G
****

ate: 4/15/89
rom: L.Pritchett
'o : J.Chow
J.Watson
C.Frazier.
Carbon Room

'otal number of samples: 418

'pecies to be analyzed:
OC/EC by carbon analyzer

.nstructions:

1. This is the sixth analysis list for IMPROVE carbon analysis. We are processing filters in order of lot number, starting with the oldest lots first.

2. Note that we are using analysis IDs on these samples, given that the actual filter IDs are too complicated and too long for the current carbon program. BE VERY CAREFUL THAT THE FILTER ID MATCHES THE ANALYSIS ID ON THIS LIST. IF THERE ARE ANY DISCREPANCIES, SEE LYLE BEFORE PROCEEDING WITH THE ANALYSIS.

3. Carbon analysis on lot G will begin the week of April 17, 1989, immediately following the Santa Barbara, Phoenix Pilot Study, and IMPROVE Lot F samples.

4. Deposit area for the quartz filters is 3.8 cm2.

5. dBase III files will be named:

carbon data : IMCarG.DBF

Sample ID	Filter ID	OC/EC
P00701	YOSE020288C1	Y _____
P00702	YOSE020288C2	Y _____
P00703	SAGO020288C1	Y _____
P00704	ARCH020288C2	Y _____
P00705	ARCH020288C1	Y _____
P00706	REDW020288C1	Y _____
P00707	PORE012688C2	Y _____
P00708	GRCA020288C1	Y _____
P00709	MORA020288C2	Y _____
P00710	BRCA020288C1	Y _____

Figure 8. Example of Carbon Analysis List

The KHP is dried at 110 C for two hours before dispensing. Transfer 0.3826 g of KHP into a glass 100 ml volumetric flask. Dilute to volume with 0.4 ml concentrated hydrochloric acid (HCl) and dionized distilled water (DDW). Mix the KHP thoroughly. Store this solution in a refrigerator until it is used for calibration purposes. This solution is good for about 40 days. Label the flask with the chemical name, the date of preparation, the name of the chemist preparing the solution, and the exact concentration. The concentration, nominally 1800 ppm carbon, is calculated by

$$\left(\frac{\text{actual g KHP}}{\text{100 ml}}\right)\left(\frac{\text{8*12 g Carbon}}{\text{204.23 g KHP}}\right)\left(\frac{\text{10^-3 ml}}{\text{ul}}\right)\left(\frac{\text{10^6 ug}}{\text{g}}\right) = \frac{\text{ug Carbon}}{\text{ul solution}}$$

The nominal 1800 ppm sucrose solution is prepared by transferring 0.428 g of sucrose into a glass 100 ml volumetric flask. Dilute to volume with DDW. Mix the sucrose thoroughly. Store this solution in a refrigerator until it is used for calibration purposes. This solution is good for about 40 days. Label the flask with the chemical name, the date of preparation, the name of the chemist preparing the solution, and the exact concentration. The concentration is calculated by

$$\left(\frac{\text{actual g Suc}}{\text{100 ml}}\right)\left(\frac{\text{12*12 g Carbon}}{\text{342.31 g KHP}}\right)\left(\frac{\text{10^-3 ml}}{\text{ul}}\right)\left(\frac{\text{10^6 ug}}{\text{g}}\right) = \frac{\text{ug Carbon}}{\text{ul solution}}$$

To prepare a blank solution, add 0.4 ml of concentrated HCl to a glass 100 ml volumetric flask and dilute to volume with DDW. This acidified DDW is made fresh each time a 1800 ppm KHP stock solution is prepared.

No primary standards currently exist for carbon analysis. Ideally, such standards should include a range of organic compounds from low to high molecular weights and with varying degrees of susceptibility to pyrolysis, as well as elemental carbon and carbonate compounds. Currently, KHP, sucrose, and the two calibration gases are used at DRI for calibration and system audit purposes.

3.2 Use of Standards

The calibration slopes derived from the two gases and the KHP- and sucrose-spiked filter punches are averaged together to yield a single calibration slope for a given analyzer. This slope represents the response of the entire analyzer to generic carbon compounds and includes the efficiencies of the oxidation and methanator zones and the sensitivity of the FID. Note that the current calibration procedure is based only on the total carbon; currently no routine procedure exists to check the accuracy of the OC/EC split.

3.3 Typical Accuracy of Calibration Standards

The accuracy of the calibration standards is primarily limited by the accuracy of the calibration gas assays and by the care taken during preparation of the KHP and sucrose solutions. The calibration slopes determined by these four compounds historically differ by less than 5%

on a given analyzer if sufficient care is taken during the calibration procedure (Section 5.1).

4.0 Procedures

4.1 General Flow Diagram

The typical flow of samples and data for carbon analysis is depicted in Figure 9.

4.2 Analyzer Start-Up

The following steps outline analyzer start-up:

- Check all gas cylinders' pressures; cylinders with gas pressures less than 500 psi should be replaced before beginning the day's analysis.

- Check that all gas delivery pressures are correct:

Hydrogen	-- 10 psi
Helium	-- 35 psi
Compressed air	-- 10 psi
O2/He mix	-- 10 psi
CH4/He mix	-- 10 psi
CO2/He mix	-- 10 psi

- Check that all FIDs are lit by holding a pair of tweezers over the FID exhaust stack and watching for condensation. If the FID is not lit (as immediately after the hydrogen or compressed air cylinders are changed), relight the flame by turning the H2 rotameter to 50 and holding a butane lighter or match over the FID stack. A light pop indicates that the flame is lit. Verify that the flame remains lit by the tweezer test. Often the flame will not stay lit the first time, especially after the hydrogen cylinder is changed and air gets into the gas lines. If the FID is cold, allow at least 30 minutes at the high gas flow to pass before turning the H2 rotameter to its correct setting.

- Check and readjust if necessary all gas flows at the analyzer. The correct readings are posted on each rotameter. Read through the center of the ball. If drastic adjustments are required on one analyzer, recheck that flows on the other two analyzers have not been affected.

- Turn on the computer monitor. Note: the computers are generally left on at all times; only the monitors are turned off at night to avoid "phosphor burn".

- If the computers have not been used for more than one day, reset the date by typing "DATE" and answering the question or by rebooting the computer (<Ctrl> <Alt> <Del>).

- If the computers on carbon analyzers #2 or #3 are rebooted, turbo mode must be set. For the computer on analyzer #2, press <Ctrl> <Alt> <+>, using the plus key on the far right side of the keyboard. For the computer on analyzer #3, press <Ctrl> <Alt> <->, using the minus key on the far right side of the keyboard. In both cases, the screen cursor will change size as turbo mode is initiated.

- At the C> prompt, type "CARBON" to begin the carbon program.

- Insure that the sample port fitting is tight and that the thermocouple push rod is reasonably snug at the back fitting. If the push rod is loose, tighten the rear fitting NO MORE than 1/16 of a turn. Do not overtighten this fitting: a push rod that is too tight is not only difficult to operate smoothly, but will cause excessive wear of the Teflon ferrule.

- From the opening menu, select option 4; see Figure 10. After insuring that the thermocouple push rod is pushed into the combustion zone, type "Y" to begin baking the oven. The oven will be baked at 800 C for 10 minutes to insure that the system is clean before beginning analysis. This option is self-timed and will turn off the oven after 10 minutes has elapsed.

- After the baking cycle is complete and while the oven is cooling, backup the previous day's analysis data by ending the carbon program (press <Esc>), changing to the appropriate directory, and typing "BACKUP C: A: /M". The system will prompt for a formatted disk to be placed in drive A:. NOTE: if data must be archived from multiple directories, begin backing up the data with the above command; after changing to the second and subsequent directories, type "BACKUP C: A: /M /A". If the "/A" is left off the command, subsequent backup attempts will erase the first set of data. After all backups are complete, label the disk in the following format:

  \directoryname Analyzer# BACKUP
  dateofanalysis disk n of n

  For example:

  \IMPROVE\LOTC C/A #1 BACKUP
  880714 disk 1 of 1

- Wipe the sample tweezers, petri dishes, and sample punch with clean KimWipes, taking care not to contact the cleaned surfaces with fingers or other dirty items.

- Begin the daily entry in the carbon analyzer logbook. Entries should follow the format in Figure 7.

- Insure that the printers have enough paper for the day and that the ribbon is producing legible printing.

- After the ovens have cooled to less than 100 C, perform a leak test on the system by flipping off the "From Oven" toggle valve. After the He-1 and He-2 rotameters settle to zero (if they don't reach zero in 2 minutes, see leak fixing procedures below), flip off the "To Oven" toggle valve. This process pressurizes the oven and connecting tubing and then isolates the oven. After 30 seconds, flip on the "To Oven" toggle valve. If the He-1 rotameter float jumps more than 5 units, the system has an unacceptable leak. Correct the leak by checking the following items:

  - Check that the sample port fitting is tight.

  - Check that the push rod is snug.

  - If the system still does not leak check, disassemble the sample port fitting, wipe all threads and ferrules clean

```
UMMM
```

with a clean, dry KimWipe, reassemble, and retry.

  - If the system continues to leak, check the integrity of all tubing and of the quartz oven. Refer to the carbon analyzer troubleshooting manual for additional tips and procedures.

- When the system leak checks satisfactorily, from the main menu of the Carbon program select option 5. This will result in the screen shown in Figure 11. While watching the He-1 and Cal Gas rotameters, select option 6 (calibration gas load). The He-1 rotameter should not change from zero, and the Cal Gas rotameter should momentarily dip down. While watching the same rotameters, select option 5 (calibration gas inject). The He-1 rotameter should jump up momentarily and the Cal Gas reading should jump slightly. Behavior different than this indicates a leak in the calibration gas injection system which must be corrected before beginning any analyses. Refer to the carbon analyzer troubleshooting manual for additional information.

- Because calibration gas has been injected into the system by the above step, the system must be purged before continuing. Open the "From Oven" toggle valve to restore flow through the oven and wait at least two minutes to insure all calibration gas has progressed through the system.

- Press <Esc> to return the Carbon program to the main menu. Select option 3 to begin the morning calibration injection. Select He/O2 carrier gas (option 2). Select either CO2 or CH4 calibration gas type as the same gas used the previous afternoon. For any given day, one gas will be used in the morning and the other in the afternoon. By using the same gas in the morning as was used the previous afternoon, the calibration gas used in the morning will be rotated on a regular schedule.

- The computer will create a sample ID based on the gas type, current date, and run number. This ID should be entered in the analyzer logbook (see Figures 12 and 7). Press <N> in response to the purge option to begin the calibration run.

- Insure that the printer is on-line.

- When the elapsed time reaches 90 seconds (Figure 13), flush the 1000 or 2500 ul syringe with the appropriate calibration gas three times. A low pitch warning tone will sound at 114 seconds (the number of beeps corresponds to the carbon analyzer number). When the analysis start tone sounds at 120 seconds, inject 1000 ul of the calibration gas into the injection port before the oven. The rest of the analysis is automatic.

- When the analysis is complete, a tabular and graphical printout similar to Figures 14 and 15 will be generated. From the tabular printout locate the calibration peak counts and the calculated ug C/filter. Record these values in the logbook as in Figure 7. The calibration peak counts should be in the following ranges:

  Analyzer #1 : 25000 counts to 27000 counts
  Analyzer #2 : 23000 counts to 25000 counts
  Analyzer #3 : 21000 counts to 23000 counts

```
UMMMMMMMMMMMMMMMMMMMMMMMMMMMMMS
J Current Directory: C:\CALIB J
TMMMMMMMMMMMMMMMMMMMMMMMMMMMMM`

Carrier gas options:

  1 ... He only
  2 ... He/O2

Input option: 1

DDDD
```

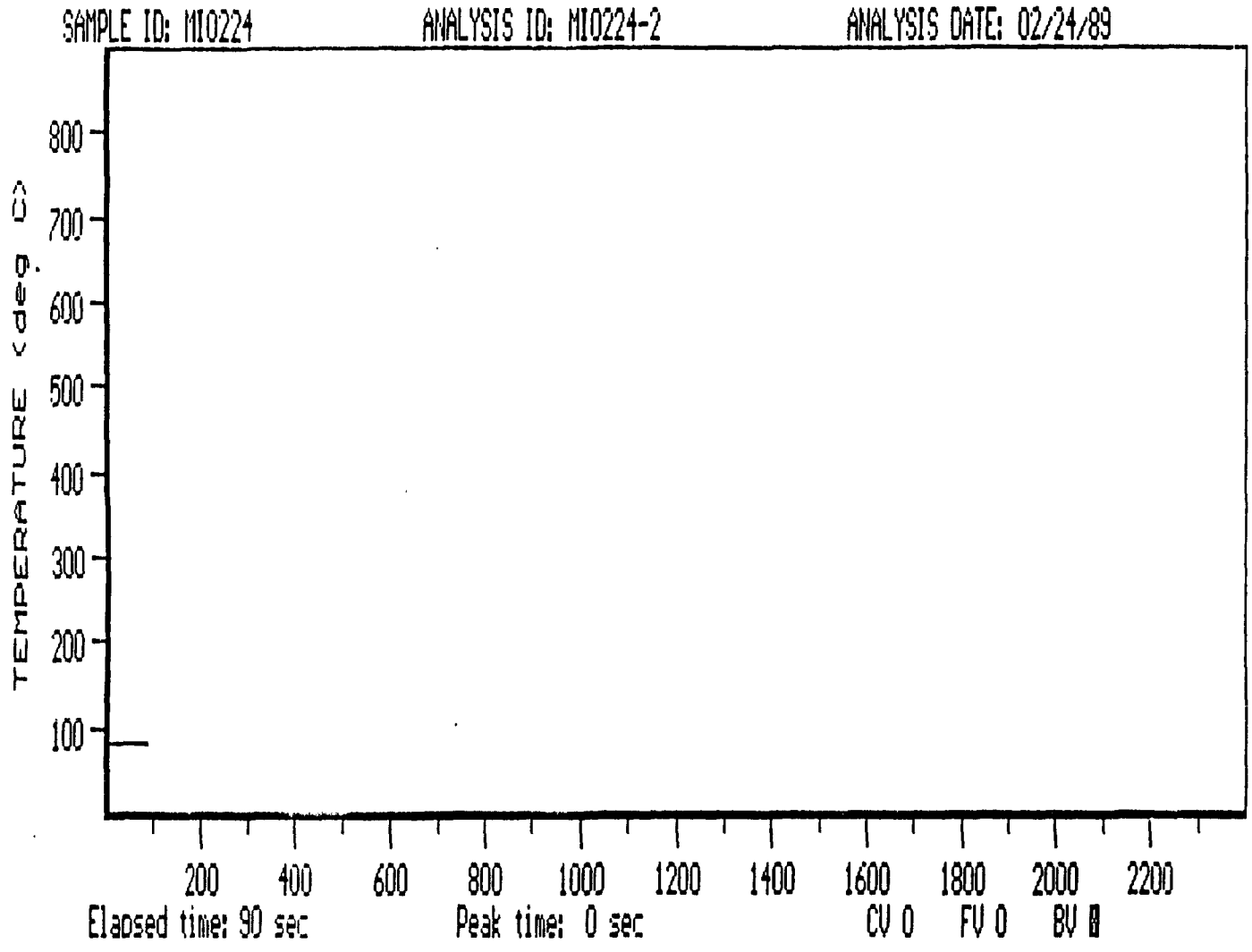

Figure 12. Carbon Thermogram at 90 Seconds

```
                          CARBON CALCULATION RESULTS
Analyzer #1            Carbon.PAS:P2.1  02/10/89       Carbon.DAT: D2.1  02/10/8
-------------------------------------------------------------------------------

Analysis ID      : MI0224-2
Sample ID        : MI0224
Carrier gas      : Helium only
Analysis         : 02/24/89  14:41
Calculation      : 02/24/89  14:52

Anal program ver: P2.1  (02/10/89)          Parm file ver  :  D2.1  (02/10/89)
Calib. slope     : 23.64 ug C/peak-to-calibration peak ratio
Calib. intercept:  0.00 ug C
Baseline window :      1 counts             Laser precision:     10 counts
Sample transit  :     26 sec                Calib transit  :     50 sec
-------------------------------------------------------------------------------
Calibration peak area: 26996 counts
Initial FID baseline :    107 counts
-------------------------------------------------------------------------------
                        Peak Area          Carbon
  OC Peak #1        : 24573 counts     21.52 ug C/punch

*******************************************************************************
  Calculated Carbon
        21.5 ug C/cm2
        21.5 ug C/filter
```

Figure 13. Example of Tabular Printout

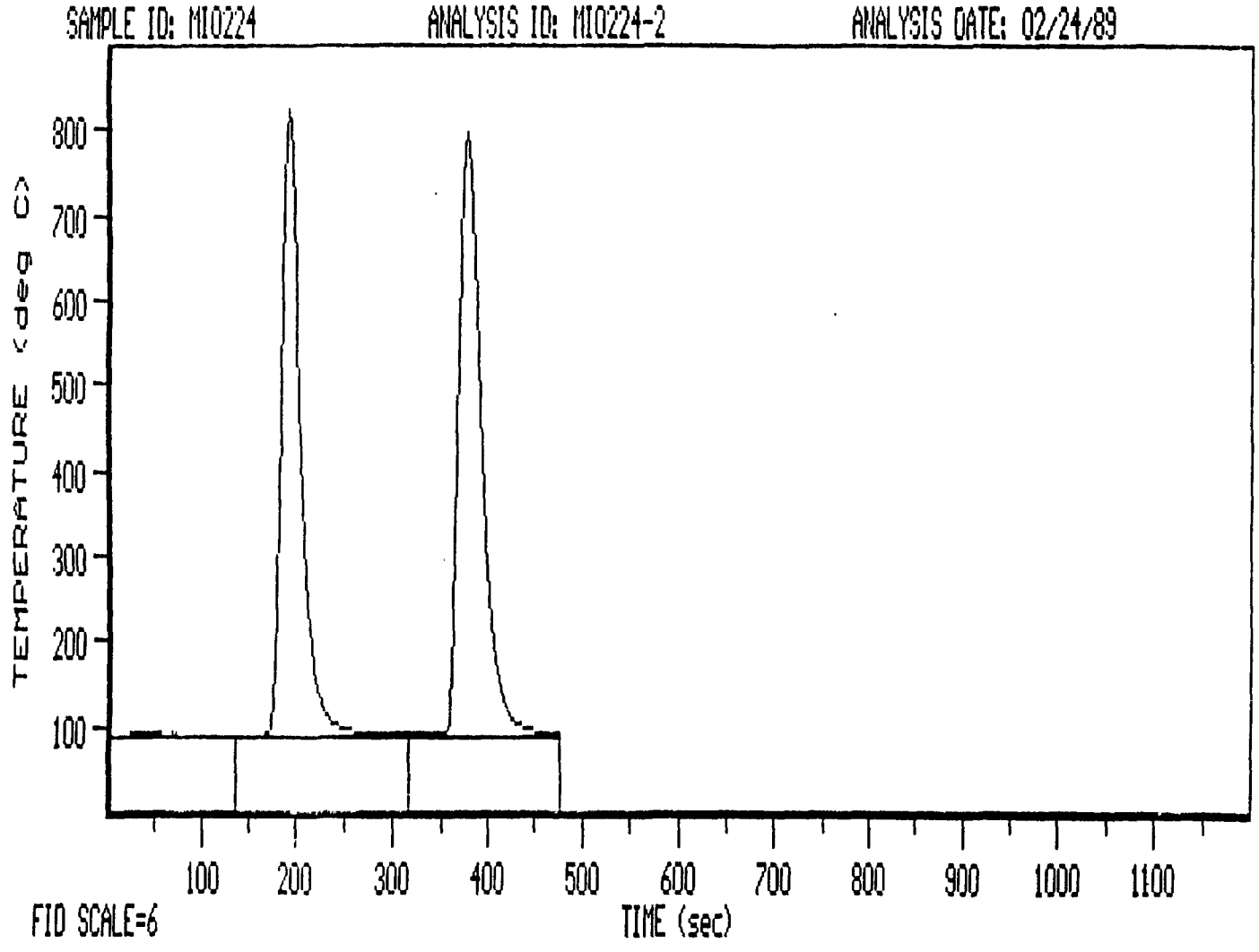

Figure 14. Example of Thermogram Printout

```
UMMM
```

[illegible] gas injections should be in the following ranges:

CH4 gas : 20 to 22.0 ug C
CO2 gas : 19.0 to 21 ug C

If results different from these are obtained, rerun the calibration injection run. If results are still out of the above ranges, locate and correct the problem; refer to the carbon analyzer troubleshooting manual.

- From the main menu of the Carbon program, select option 7 to change to the appropriate subdirectory for the samples to be analyzed. The new subdirectory name, if valid, will be displayed at the top on the screen.

- Based on the analysis list for the day, retrieve the samples to be analyzed from the sample freezer and place in a styrofoam cooler with blue ice. Place the cooler in the instrument room.

4.3 Routine Operation

Routine analysis procedures depend on whether or not carbonate carbon will be determined before OC/EC analysis. The procedures are different for these two options.

4.3.1 Routine OC/EC Analysis

- Pull the push rod back to the idle zone of the quartz oven (approximately half way between the sample port and the heating elements). Allow the boat/push rod to cool until the reading on the front of the analyzer reaches 50 C or less. Do not pull the boat into the sample loading zone when the boat is still hot as the heat will affect the Teflon ferrules of the sample port fitting.

- Insure that the petri dish, tweezers, and punch are thoroughly wiped clean with a dry KimWipe.

- Based on the analysis list, remove the sample to be analyzed from the styrofoam cooler.

- Remove the filter from the PetriSlide or petri dish with tweezers, taking care to handle the filter only by the edge. Place the filter on the glass petri dish and remove a sample punch by pushing down gently on the punch. Rocking the punch slightly will insure that the punch is complete severed. Try to remove the punch from the edge of the deposit to avoid wasting the filter, but try to avoid areas of non-uniform deposits. Leaving the sample punch in the punch, place the punch under a KimWipe. Replace the filter in the PetriSlide or petri dish.

- Record the filter ID in the analyzer log book (Figure 7).

- After the boat has cooled to 50 C or less, loosen the sample port fitting carefully with a wrench. NOTE: avoid exerting any sideways pressure on the quartz oven. Try to confine the wrench pressure to only rotational torque. Loosen the front fitting before attempting the rear fitting. Slide the sample port fitting forward.

- Pull the boat back until it is centered in the sample port, taking care that the small stainless steel "ear" holding the boat to the push rod does not catch on the sample port opening and bend. If the "ear" does bend, carefully bend it back into position with tweezers or small clean pliers.

- Using the tweezers, push the bottom of the punch in the boat forward so that the top of the punch can be accessed. Remove the punch and place it on the top of the analyzer.

- Pushing the bottom of the sample punch in, remove the sample from the punch and place it in the sample boat. Generally, the punch must be inserted sideways into the boat and then turned so the punch wedges itself facing forward. Push the punch forward until it is seated against the front of the slot in the boat.

- Push the push rod forward until the boat is located in the idle zone of the quartz oven. Slide the sample port fitting back until it is centered over the sample port and tighten firmly by hand. DO NOT tighten with a wrench. As before, avoid exerting any sideways pressure on the quartz oven.

- Select option 1 of the main menu of the Carbon program. Input the full sample ID. NOTE: the program will automatically place the computer into Caps Lock mode. After verifying the sample ID, enter the run number (1-9). The run number must correspond to the number of punches removed from the filter. Replicate runs are designated simply by the appropriate punch number (usually "2"). Note: the program creates a file name using the last six characters of the sample ID plus the run number; if the program finds another file with the same name, it will request that a new run number be input so the existing file will not be overwritten.

- Input the appropriate punch size (normally 0.503 cm2) and filter deposit area. Note that pressing the return key is not necessary. Also note that if a mistake is made during input of analysis data pressing <Esc> will allow the option to be aborted and restarted.

- When all data is correct, press any key except <Esc> to start the analysis program. See Figure 16.

- Using a small piece of clear tape, attach the previous sample punch to its thermogram, insuring that the deposit side is up.

- Replace the PetriSlide or petri dish containing the filter into the styrofoam cooler.

- The program will purge the oven with He for 2 minutes, after which data collection will begin. Readings are collected for 2 minutes to establish baselines. At 114 seconds, a warning tone will sound (the number of beeps corresponds to the analyzer number). At 120 seconds the analysis start tone will sound. At that time, push the push rod in until the stop is against the back fitting. While watching the punch, pull the push rod back 1-2 mm to physically decouple the pushrod from the boat. If the boat slides back, immediately push the thermocouple back in and try again. The boat cannot be physically attached to the push rod during analysis, as expansion of the thermocouple as the sample is heated will push the punch closer to the laser rod and cause erroneous laser signals.

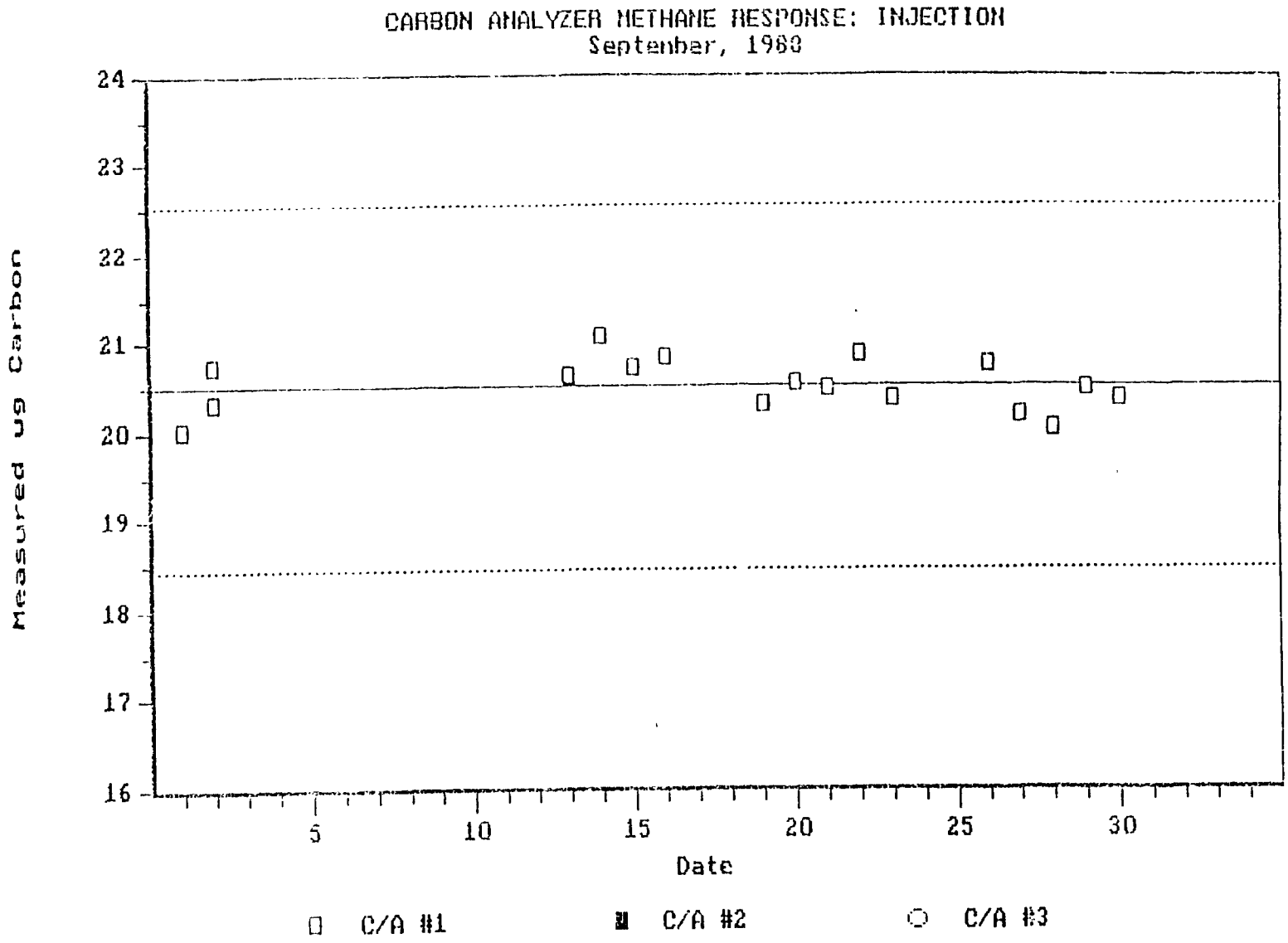

Figure 16. Example QA Plot: Calibration Peaks

All physical adjustments must be made within 10 seconds: between 130 and 140 seconds analysis time the laser baseline is calculated. If the sample is not correctly positioned at the end of 10 seconds, press <Esc> to abort the program, pull the boat back to the idle zone, and restart the program. Decoupling the boat is most important for a meaningful laser signal.

- The program will proceed automatically from this point without further operator intervention. At the end of the program, data is saved to disk, split times are calculated, carbon peaks are integrated, and tabular and graphical printouts are produced. When the printer begins, the push rod may be pulled back to the idle zone to begin cooling.

- Examine the thermogram for proper laser response, temperature profiles, realistic carbon peaks, and the presence of the calibration peak at the end of the analysis. Examine the tabular printout to insure the calibration peak counts are within specifications (see Section 4.2). Finally, examine the laser signal at the end of the run. Drooping of the laser signal as the temperature is dropping is an indication that the boat was coupled to the push rod and that the sample should be rerun. If all aspects of the analysis appears correct. Select the appropriate analysis flag from the screen that appears at the end of the run (Figure 17). Mark the analysis date after the sample on the sample analysis list. If a problem is found, indicate the problem in the analyzer log book and rerun the sample.

- Repeat the above steps for additional samples.

4.3.2 System Blanks

System blanks are run each Monday. Follow the steps outlined in Section 4.3.1 with the following exceptions:

- Use option 7 from the main menu to change to the \SYSBLK subdirectory.

- Go through all the steps for a normal analysis, with the exception that the punch from the previous analysis is not removed. Open the sample port, pull the boat back into the loading zone, and without touching the existing punch push the boat forward into the idle zone, seal the sample port, and proceed with the analysis.

- Use an ID number derived from the current date: e.g., SB0718.

- Calculated carbon concentrations should not be more that 0.2 ug carbon. Values greater than this warrant a second system blank.

4.3.3 Carbonate Analysis

- Follow the steps under Section 4.3.1 until the sample punch is loaded into the boat. Pull the boat BACK until the punch is centered under the acid injection port, taking care that the "ears" holding the boat to the push rod are not bent in the process.

- Select option 2 from the main menu. Enter the sample ID, run number, punch size, and filter size. Select the purge option and start the analysis program.

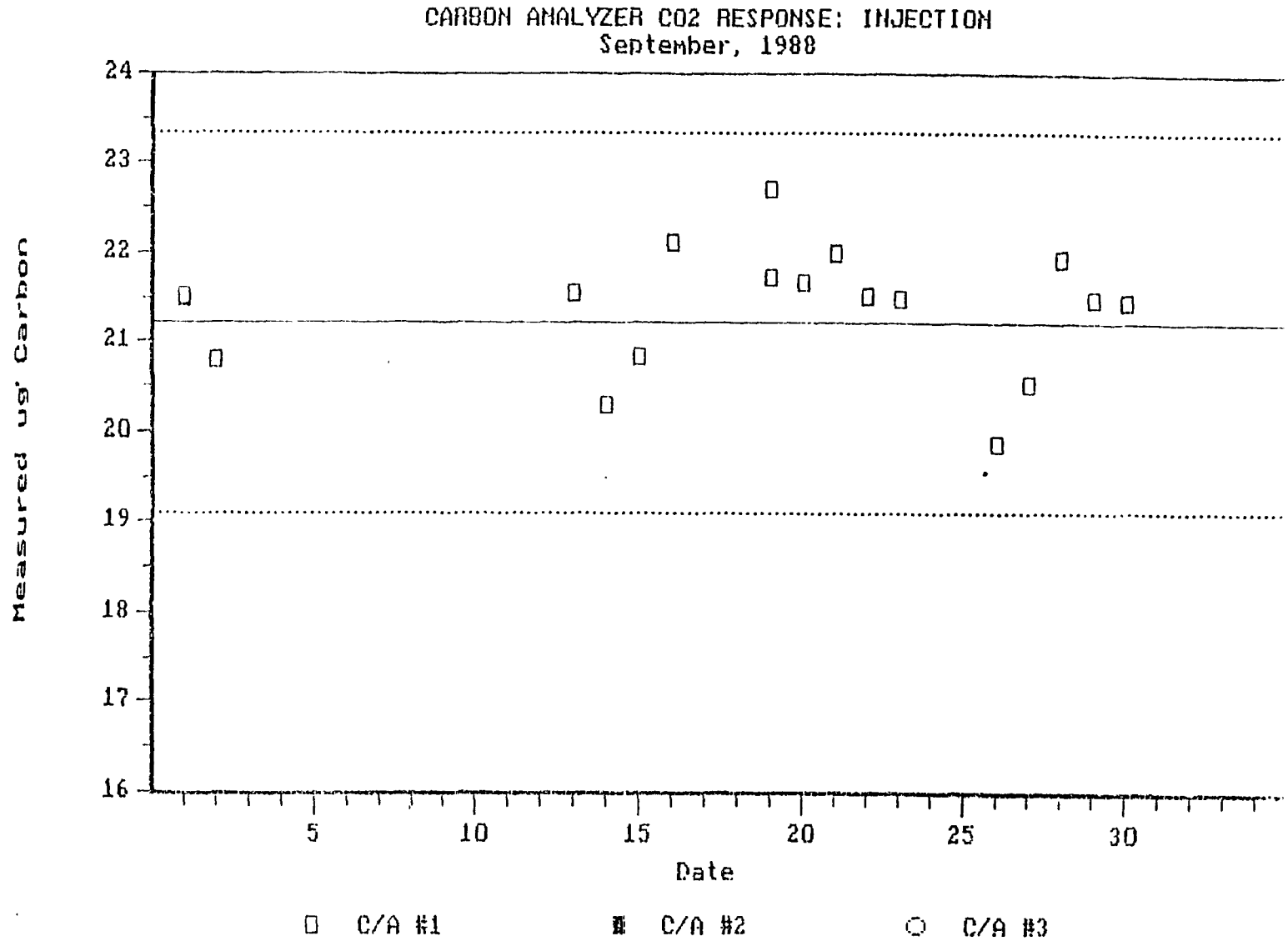

Figure 17. Example QA Plot: CO_2 Injections

- At 90 seconds elapsed analysis time flush the 25 ul syringe with 0.4 M hydrochloric acid (HCl). When the start tone sounds at 120 seconds elapsed time, eject 20 ul HCl onto the filter punch, insuring that the needle bevel is turned toward the punch and that the needle tip is touching the top of the punch.

- When all analyses are underway, flush the syringe with distilled water to prevent corrosion of the syringe plunger.

- After the carbonate analysis is completed, a tabular summary and a copy of the graph will be printed. The progam will automatically cycle into the normal OC/EC analysis, using the same sample ID. Push the sample boat into the punch drying area (about 1 cm from the first coil of the sample oven). If the sample punch has tipped over during the carbonate analysis, open the sample port, reorient the punch, close the port, and proceed with drying the punch. Heat from the oxidation oven will dry the sample in this position without prematurely baking carbon from the sample; the sample temperature should not exceed 42 C. When the punch appears to be dry (wait at least 5 minutes), start the OC/EC analysis.

4.4 Analyzer Shut-Down

After the final sample for the day is analyzed, shut down the analyzers by:

- Leave the last analyzed punch in the boat and the boat positioned in the heating zone.

- Select option 3 to begin the calibration gas injection routine. Follow the injection procedures outlined in Section 4.2, with the exception that a He only atmosphere is used during the afternoon check.

- When the analysis is complete, record the calibration peak counts and calculated injection calibration in the logbook. Any values outside the ranges defined in Section 4.2 should be investigated and rerun. Because low values from the end-of-day calibration could potentially invalidate the entire day's runs, any deviations from the accepted ranges must be noted and the cause defined.

- After a satisfactory injection concentration is obtained, use option 7 to change to the directories in which analysis results were saved during the day. Use option 8 to print a single page summary of the day's analyses in each directory.

- Press <Esc> to end the Carbon program. This is necessary because when the Carbon program ends, it sets the analyzer valves such that oxygen is flowing through the MnO_2 catalyst, allowing some regeneration of the catalyst overnight.

- Remove the printouts and attach them to a manila folder labeled with the date and analyzer number. Place on the lab supervisor's desk for Level I validation.

- Leave the computers and analyzers on overnight unless the potential for power outages or surges exists. Turn off the monitors overnight to reduce the possibility of phosphor burn.

- Make a final check of the gas cylinder pressures to insure that

will be available to check them again.

- Put the samples and blue ice in the styrofoam cooler back into the sample storage freezer and lock the freezer.

- If the 25 ul syringe was used for carbonate analysis, thoroughly rinse the syringe with distilled water and tightly cap all solutions.

- Lock the carbon analysis room.

4.5 Abbreviated Operational Checklist

Start-Up:

- Check all gas cylinders' pressures and delivery pressures.

- Check that all FIDs are lit by holding a pair of tweezers over the FID exhaust stack and watching for condensation. Relight if necessary.

- Check and readjust if necessary all gas flows at the analyzer.

- Turn on the computer monitor.

- Insure that the date on the computer is current.

- At the C> prompt, type "CARBON" to begin the carbon program.

- Insure that the sample port fitting is tight and that the thermocouple push rod is reasonably snug at the back fitting.

- From the opening menu, select option 4 to bake the oven for 10 minutes.

- Backup the previous day's analysis data.

- Wipe the sample tweezers, petri dishes, and sample punch.

- Begin the daily entry in the carbon analyzer logbook.

- Insure that the printers have enough paper for the day and that the ribbon is producing legible printing.

- After the ovens have cooled to less than 100 C, perform a leak test, involving isolating the oven and operating the Carle valve.

- Purge the system of calibration gas injected by the above step.

- Perform the morning calibration injection by selecting option 3 and He/O2 carrier gas (option 1). When the analysis is complete, record the calibration peak counts and injection concentration. Insure that these values are within their proper ranges.

- Change to the appropriate subdirectory for the samples to be analyzed.

- Retrieve the samples to be analyzed from the sample freezer.

Routine OC/EC Analysis

- Pull the push rod back to the idle zone of the quartz oven and allow the boat/push rod to cool to 50 C or less.

- Insure that the petri dish, tweezers, and punch are wiped clean.

- Based on the analysis list, remove the sample to be analyzed from the styrofoam cooler.

- Remove a sample punch from the filter.

- Record the filter ID in the analyzer log book, along with any comments on the condition of the deposit or any other conditions which might affect analysis results.

- After the boat has cooled to 50 C or less, remove the previous and load the current punch.

- Begin the analysis by selecting option 1 from the main menu of the Carbon program and inputting the sample ID, run number, punch size, and filter deposit area.

- Push the sample into the heated zone at 120 seconds, insuring that the boat is not physically coupled to the push rod.

- Using a small piece of clear tape, attach the previous sample punch to its thermogram, insuring that the deposit side is up.

- Replace the PetriSlide or petri dish containing the filter into the styrofoam cooler.

- At the end of the analysis, the push rod may be pulled back to the idle zone to begin cooling.

- Examine the thermogram for proper laser response, temperature profiles, realistic carbon peaks, and the presence of the calibration at the end of the analysis. Examine the tabular printout to insure the calibration peak counts are within specifications (see Section 4.2). Finally, examine the laser signal at the end of the run. Rerun any deviants immediately. Indicate successful analyses on the sample analysis list.

- Repeat the above steps for additional samples.

System Blanks (run first each Monday):

- Change to the \SYSBLK subdirectory.

- Go through all the steps for a normal analysis, with the exception that the punch from the previous analysis is not removed. Open the sample port, pull the boat back into the loading zone, and without touching the existing punch push the boat forward into the idle zone, seal the sample port, and proceed with the analysis.

- Use an ID number derived from the current date: e.g., SB0718.

- Calculated carbon concentrations should not be more that 0.2 ug carbon. Values greater than this warrant a second system blank.

Carbonate Analysis:

- Follow the steps under Routine Analysis until the sample punch is loaded into the boat. Pull the boat BACK until the punch is centered under the acid injection port.

- Select option 2 from the main menu. Enter the sample ID, run number, punch size, and filter size. Select the purge option and start the analysis program.

- At 120 seconds elapsed time, eject 15 ul HCl onto the filter punch.

- Flush the syringe with distilled water between samples.

- Continue the normal OC/EC analysis when the carbonate cycle is complete.

Analyzer Shut-Down:

- Leave the last analyzed punch in the boat and the boat positioned in the heating zone.

- Select option 3 to begin the calibration gas injection routine. Follow the injection procedures outlined in the Start Up section with the exception that a He only atmosphere is used.

- When the analysis is complete, record the calibration peak counts and calculated injection calibration in the logbook. Any values outside the ranges defined in Section 4.2 should be investigated and rerun.

- Print summaries of the day's analyses.

- Remove the printouts and attach them to a manila folder labeled with the date and analyzer number. Place on the lab supervisor's desk.

- Turn off the computer monitors

- Make a final check of the gas cylinder pressures.

- Put the samples and blue ice in the styrofoam cooler back into the sample storage freezer and lock the freezer.

- If the 25 ul syringe was used for carbonate analysis, thoroughly rinse the syringe with distilled water and tightly cap all solutions.

- Lock the carbon analysis room.

5.0 Quantification

5.1 Calibration procedures

The calibration procedures for the carbon analyzers are of two types: the end-of-run automatic injection and the manual calibration using KHP and the two calibration gases. The end-of-run calibration consists of a set quantity of CH_4 calibration which is automatically injected by the Carbon program. All FID readings during the analysis run are normalized to this peak to minimize the effects of FID

performance and electronic drift over time. The manual calibration, performed twice a year or when a new calibration gas cylinder is started, establishes the calibration slope used in converting counts to ug of carbon, as explained in the next section.

The end-of-run calibration occurs automatically at the end of the analysis run and requires no operator intervention. The integrated calibration peak counts should be checked by the operator immediately after each run to insure that the analyzer is operating satisfactorily.

The manual calibration involves spiking prefired quartz punches with various amounts of the 1800 ppm KHP and sucrose solutions (Section 3.1) and injecting various volumes of the CO2 and CH4 gases.

A clean blank quartz punch is baked in the oven at 800 C for 10 minutes using option 4 from the main menu of the carbon program. After the punch has cooled to less than 50 C, the solution is injected onto the punch using a 20 ul syringe. The following volumes are used:

5 ul KHP or sucrose solution
10 ul KHP or sucrose solution
15 ul KHP or sucrose solution (do twice)
20 ul KHP or sucrose solution
no injection (as a system blank)
20 ul acidified DDW only (check of background level of DDW)

The sample port is sealed and the punch is pushed to 1 cm from the sample oven. In this position the punch will be about 39 C due to the heat from the methanator oven. Allow the punch to dry thoroughly; the punch will turn from translucent to opaque as it dries. The punch must be dry to avoid water vapor effects on the FID. The carbonate option from the main menu is selected and started. This yields a two-peak thermogram, including the normal calibration peak at the end of the run. The integrated peak counts for both the sample peak and the calibration peak are recorded.

The CO2 and CH4 calibrations are also run by using the carbonate option. The following volumes are injected:

100 ml CO2 or CH4 gas
250 ml CO2 or CH4 gas
500 ml CO2 or CH4 gas
1000 ml CO2 or CH4 gas
2000 ml CO2 or CH4 gas

Again, the integrated peak counts are extracted manually from the tabular printouts.

Calibration values are plotted as actual ug carbon vs. the ratio of the integrated sample peak counts to the calibration peak counts. Obvious outliers are identified and rerun. Linear regression is performed on each set of calibration data individually. The calibration slope derived from the CO2 injections typically has a slightly different slope and does not fit as well. The slope is calculated from

$$m = \frac{\sum y_i \; x_i}{\sum x_i^2}$$

and the standard deviation is calculated by

$$\sigma = \sqrt{\left(\frac{1}{n-1}\right)\left(\frac{\sum(y_i - mx_i)^2}{\sum x_i^2}\right)}$$

Note that this is a special form of the regression formula which insures that the curve passes through the origin.

The resulting slope is compared to previous calibration results. New values should be no more than 10 % different than previous calibrations if no major analyzer changes have been made.

The new slope is placed into the Carbon.DAT file for each analyzer; this file contains analyzer parameters which are read into the Carbon program when it is first started. The date in the Carbon.DAT file is also updated.

Calibration data and plots are retained in file folders in the file cabinet with raw analysis data.

5.2 Calculations

The conversion of integrated peak counts to ug of carbon for each peak in the thermogram is performed by the computer at the end of the analysis program. For reference purposes, the calculation is

$$\text{peak ug C/punch} = \frac{\text{(integrated peak counts above baseline)(calibration slope)}}{\text{(integrated calibration peak counts above baseline)}}$$

The peaks reported are: four organic peaks (OC1, OC2, OC3, and OC4) corresponding to 120, 250, 450, and 550 C, respectively; three elemental carbon peaks (EC1, EC2, and EC3) corresponding to 550 C after the introduction of O2, 700, and 800 C, respectively; and three pyrolyzed organic carbon peaks (Lower, Regular, and Upper Pyrolyzed Carbon) corresponding to the peaks after the introduction of O2 and before the Lower Split Time, Regular Split Time, and the Upper Split Time, respectively (see Section 1.7).

Carbon values per punch are converted to ug C/cm2 by

$$\text{ug C/cm2} = \frac{\text{(ug C/punch)}}{\text{(punch area)}}$$

Finally, carbon values are converted to ug C/filter by

$$\text{ug C/filter} = \text{(ug C/cm2) (filter deposit area)}$$

The blank subtract and precision calculations are performed as

the data is merged into the final database (Section 7.3).

6.0 Quality Control

6.1 Performance Testing

System blanks are performed at the beginning of each week to insure the system is not introducing bias in the carbon results and to insure that the laser signal is not temperature dependent.

Contamination is potentially due to:

- Operator practices, such as improper cleaning of tweezers and punch.
- Teflon particles on the push rod are getting into the heated zone of the quartz oven.
- The sample boat is contaminated.
- The carrier gases are contaminated.

A temperature-dependent laser signal is potentially due to:

- Physical coupling of the push rod to the boat during the run.
- A quartz rod ready for replacement. Microscopic cracks in the quartz rod will increase internal reflectance of the laser; as the number of these cracks multiply, the effect of temperature on these cracks, and thus on the reflectance, becomes an interference in the laser signal.

As described in Section 5.1, the calibration peak at the end of each analysis run serves as a regular standard; the integrated area under the calibration peak serves as a measure of analyzer performance. In addition, the injection of two calibration gases daily further serves as standards. Primary standards in the form of spiked filter punches do not yet exist.

6.2 Reproducibility Testing

Replicates of analyzed samples are performed at the rate of one per group of ten samples. The replicate is selected randomly and run immediately after a group of ten is completed. The ug/cm2 values for OC, EC, and TC are compared with the original run. The values should fall into the following criteria:

Range	Criteria
<= 10 ug/cm2	<= +-1.0 ug/cm2
> 10 ug/cm2	<= 10 % of average of the 2 values

Notice that the criteria merge at 10 ug/cm2. Replicates which do not fall within the above criteria must be investigated for analyzer or sample anomalies. Analyzer anomalies include poor response (as reflected in the calibration peak areas) or poor laser splits. Typical sample anomalies include inhomogeneous deposits or contamination during analysis. Inconsistent replicates for which a reason cannot be found must be rerun again.

6.3 Control Charts and Procedures

Three types of control charts are updated at the beginning of each week. These charts include a month of data and are posted in the carbon room until the month is complete, after which they are filed with the raw analysis results.

The first is a plot of calibration peak counts as percent deviation from a historical mean versus date (Figure 16). Instances where the calibration peak area deviates by more than 10% from the historical mean must be investigated and the cause corrected. The historical mean covers the previous 3 month's results and is updated quarterly, when the CH4 calibration gas is changed, or when extensive repairs are performed.

The charts are created by running a program called CarleQA.EXE. This program requires a data file called CalibSum.HIS, which contains the historical means for each carbon analyzer. When the historical means are updated, the values in CalibSum.HIS are altered using an ASCII word editor.

The second type of control chart is a plot of calibration gas calculated concentration versus date (Figure 17). Separate charts are generated for CH4 and CO2 gases. Instances where the calibration gas concentrations deviate from the historical mean by more than 10% must be investigated. Most frequently, low calibration gas concentrations are due to poor injection practices, such as failure to flush the syringe with the gas prior to withdrawing a sample and slippage of the plunger during injection into the analyzer.

These charts are created by running a program called SyrinjQA.EXE. Again, this program requires the CalibSum.HIS data file. The discussion above applies to the calibration gas historical means as well.

The third type of control chart is a plot of replicate results. These charts are generated on a project-by-project basis for the purpose of visual inspection of analysis precision. Because the precision of the carbon analyzers is strongly influenced by deposit homogeneity (Section 1.5), comparison of precision results across projects should be attempted only with caution.

6.4 Analysis Flags

During Level I validation (see Section 6.5), unusual conditions of the deposit or analysis problems are noted on the analysis printouts. Errors in pre-analysis data entry (e.g., in filter ID, punch area, deposit area) are also noted.

Flags are applied to the dBase file created from the analysis results ASCII file (see Section 6.5). The following flags are used:

b1 ... field blank
b2 ... lab blank
f1 ... filter damaged, outside of analysis area
i1 ... inhomogeneous filter deposit
i3 ... deposit falling off
i4 ... abnormal deposit area, possible air leakage during

sampling
i5 ... non-white sample punch after analysis
r1 ... first replicate on same analyzer
r2 ... second replicate on same analyzer
r3 ... third replicate on same analyzer
r5 ... replicate on different analyzer
v ... sample void

Note that all results flagged with "v" must include a description of the reason for invalidating the sample in the remarks field.

6.5 Data Validation and Feedback

6.5.1 Daily Validation

Level I validation is performed by manually checking the tabular and thermogram printouts the day after the analysis is performed. The following items are checked on the tabular data (Figure 18):

- the filter ID is correct
- for calibration injection runs, the gas type is He/O2 in the morning and He only in the afternoon
- the analysis date is correct
- the punch area is correct; errors in entry require that the calculated carbon concentrations be recalculated by hand.
- the deposit area is correct; errors in entry require that the calculated carbon concentrations be recalculated by hand.
- the calibration peak area is in the correct range (Section 4.2)
- the initial and final FID baseline are within 3 counts of each other; excessive FID baseline drift is cause for reanalysis
- the lower laser split time and the upper laser split time are within 10 seconds of each other. If the times differ by more than 10 seconds, check that the lower split OC and upper split OC differ by no more than 5%. OC values which differ by more than 5%, unless due to a small change in laser signal resulting from an extremely clean or very dark sample, requires reanalysis.
- calculated carbon values for calibration injection runs are within 10% of the current mean value for that gas type and that analyzer.
- filter acceptance runs result in <1.5 ug/cm2 OC, <0.5 ug/cm2 EC, and <2.0 ug/cm2 TC. Filters which exceed these levels must be refired.

Items which are found to be okay are underlined in red. Items which have problems are circled in red.

The thermograms are checked for the following (Figure 19):

- the initial FID baseline is flat, indicating that the analyzer has been thoroughly purged before analysis began.

CARBON CALCULATION RESULTS

Analyzer #1 Carbon.PAS:P2.1 02/10/89 Carbon.DAT: D2.1 02/10/

Analysis ID : 807176-1
Sample ID : 807176
Analysis : 02/10/89 15:37
Calculation : 02/24/89 15:01

Anal program ver: P2.1 (02/10/89) Parm file ver : D2.1 (02/10/8
Calib. slope : 23.64 ug C/peak-to-calibration peak ratio
Calib. intercept: 0.00 ug C
Baseline window : 1 counts Laser precision: 10 counts
Sample transit : 26 sec Calib transit : 50 sec

Punch area : 0.503 cm2
Deposit area : 13.80 cm2

Calibration peak area: 26610 counts
Initial FID baseline : 107 counts
Final FID baseline : 107 counts
Initial laser : 1790 counts

	Laser Split Time	Laser	FID Split Time
Lower split :	1528 sec	1781 counts	1554 sec
Regular split:	1532 sec	1793 counts	1558 sec
Upper split :	1536 sec	1804 counts	1562 sec

	Peak Area	Carbon
OC Peak #1 :	801 counts	0.71 ug C/punch
OC Peak #2 :	1225 counts	1.09 ug C/punch
OC Peak #3 :	5102 counts	4.53 ug C/punch
OC Peak #4 :	2701 counts	2.40 ug C/punch
Lower pyro'd OC :	943 counts	0.84 ug C/punch
Reg. pyro'd OC :	990 counts	0.88 ug C/punch
Upper pyro'd OC :	1034 counts	0.92 ug C/punch
EC Peak #1 :	2062 counts	1.83 ug C/punch
EC Peak #2 :	1546 counts	1.37 ug C/punch
EC Peak #3 :	75 counts	0.07 ug C/punch

****

	VOC	OC	EC	TC	
Lower split :	1.4	19.0	4.8	23.9	ug C/cm2
	19.5	262.5	66.8	329.3	ug C/filter
Regular split:	1.4	19.1	4.8	23.9	ug C/cm2
	19.5	263.7	65.6	329.3	ug C/filter
Upper split :	1.4	19.2	4.7	23.9	ug C/cm2
	19.5	264.8	64.6	329.3	ug C/filter

****

OC/TC: 0.80
EC/TC: 0.20
OC/EC: 4.02

Figure 18. Example Level I Validated Tabular Printout

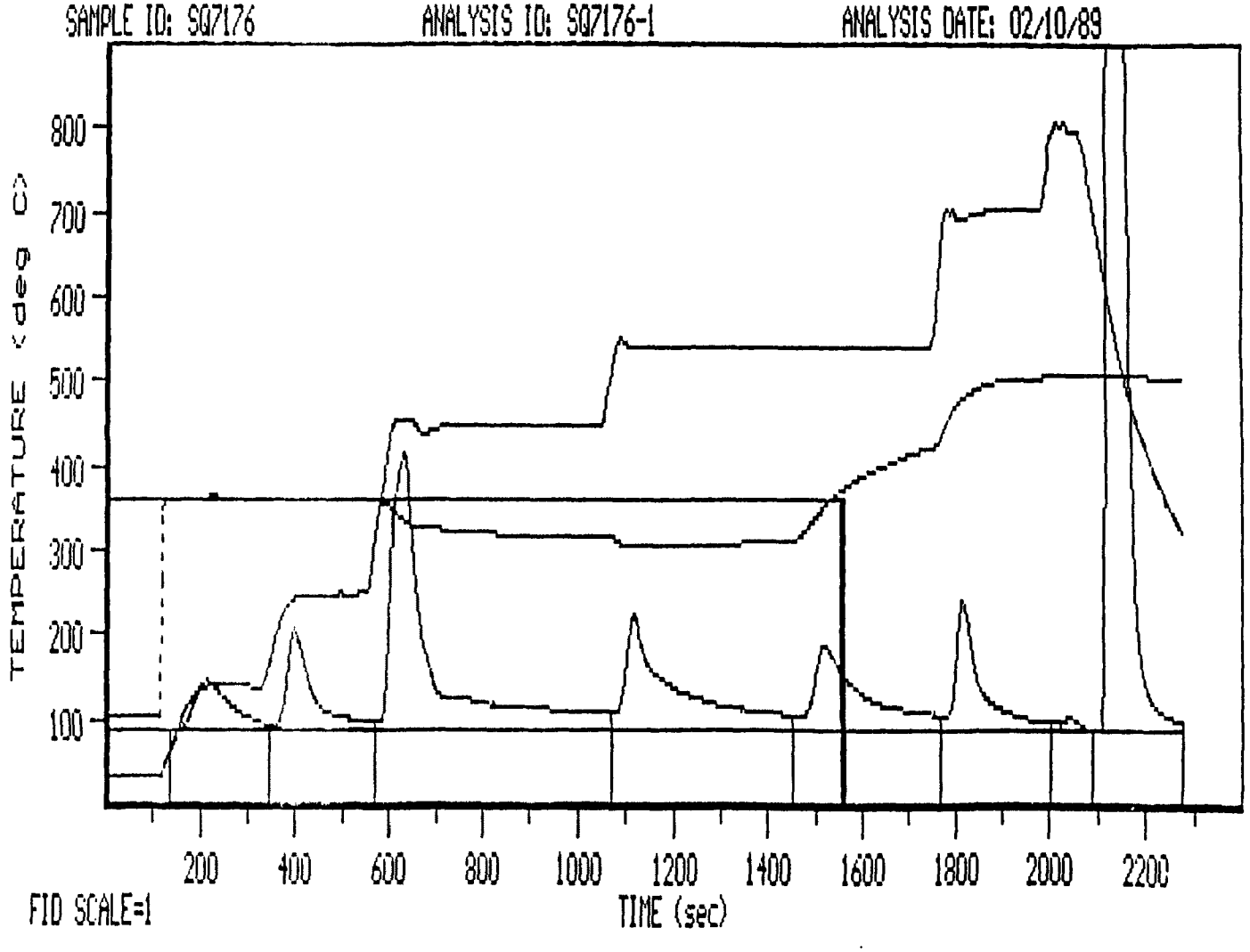

Figure 19. Example Level I Validated Thermogram

- the final FID baseline prior to the calibration peak is within 3 pixels of the calculated FID baseline; excessive drift is cause for reanalysis.

- the laser signal during the first 2 minutes appears near the bottom of the graph (no reflectance); an excessively high initial laser is an indication that the internal reflectance of the quartz rod is too high, either due to too many internal cracks or a complete fracture of the rod. High initial lasers should result in a physical inspection of the analyzer.

- the calculated initial laser line matches the laser signal immediately after the rod is pushed in. A laser line which is too low is an indication that the sample was not pushed into the oven in time; a laser signal which exceeds the calculated initial laser is a symptom of physical coupling between the sample boat and the push rod, although some automobile emission samples also show this characteristic; a spike or a number of jumps in the laser signal indicates that the operator had difficulty in decoupling the boat from the push rod. All of these problems are grounds for reanalysis if severe.

- the laser signal should dip below the initial laser line until oxygen is introduced at 550 C, at which the signal should rise steeply.

- the laser at the end of the analysis is flat; if the laser signal dips as the oven begins to cool, the boat is physically coupled to the push rod and the laser signal during the rest of the analysis is suspect.

- the temperature readings reflect stable temperatures at each level and smooth, quick transitions between levels.

Problems or deviations from normal should be circled in red. If the sample punch taped to the thermogram is not white, it is also circled.

If examination of the tabular and thermogram printouts result in a decision that a sample should be reanalyzed, write "Rerun" in red on the printouts and prepare a reanalysis list. This list should be posted immediately after the validation is complete, and those samples should be rerun as soon as they can be conveniently fit into the current day's analyses.

Evidence of persistent analyzer problems must be resolved, either by physically examining the analyzer or reviewing the problems with the analyzer operator.

6.5.2 Validation of Final Data File

The following steps are followed to create and do Level "I 1/2" validation on carbon data:

Obtain copies of the latest version of the summary file from the directory corresponding to the desired project. These files are called CPeaks.n, where n is the carbon analyzer number. These files may be either restored from the backup files or copied directly from the carbon analyzer computers. The latter method is recommended, from the standpoints of ease of use and of a guarantee that the summary files retrieved are the latest versions. These files are

updated at the end of each analytical run, so the latest version is necessary to insure that all of the analyses are included.

Copy the files together using the DOS COPY command:

```
COPY CPEAKS.* TEMP
REN TEMP CPEAKS.ALL
```

The first command copies all of the available summary files into one file called TEMP. The second command renames the TEMP file to CPEAKS.ALL, the designated name for the combined files. Note that the two commands cannot be combined; i.e., don't try

```
COPY CPEAKS.* CPEAKS.ALL
```

This will not work, because at some point the computer will be trying to copy CPEAKS.ALL into itself.

The ASCII CPEAKS.ALL file is reformatted, sorted, and placed into a dBase III file by the following:

```
DBASE
DO INPCAR
```

The INPCAR program will prompt the user for the ASCII input file name (CPEAKS.ALL). It will also ask for an output file name. The dBASE file naming convention calls for a name in the following format:

```
xxOEnnt.DBF, where    xx is the 2 character project identifier
                      OE stands for organic/elemental carbon
                      nn is the 2 digit batch number (generally
                         used to distinguish between different
                         projects for the same client or between
                         sampling quarters for an extended project)
                      t  stands for the sample type:
                           W = woodstove
                           A = ambient
                           P = generic point source
                           D = diesel emissions
                           G = gasoline emissions
                           E = mixed vehicle emissions
                           F = field/ag burn emissions
                           X = mixed types
```

The final dBase file name is specified in the analysis list posted in the carbon room.

After the INPCAR program produces the dBase output file, the program will alert the operator that it is ready to print the contents of that file. NOTE: wide carriage printer is strongly recommended.

After the printout is produced, immediately label the top of the printout with the file name and printout date.

Begin validation by matching the filters listed on the analysis list with the filters listed on the dBase printout. There must be at least one entry on the printout for every filter listed on the analysis list. Flag field and lab blanks as the list is reviewed by placing "b1" or "b2" in the second column of the printout. Because the dBase printout is sorted by ID number, replicates and reruns will be grouped together.

Indicate missing data by writing the missing filter ID in the margin with an arrow drawn to the appropriate place of insertion. Scan the printout for unusual IDs which may have been mistyped during analysis. Generally these will appear at the beginning or end of the printout due to the sorting process. Make sure also that any samples listed on a rerun list appear on the printout.

Resolve all missing data. If a large amount of data is missing because of analysis in the incorrect subdirectory, it is generally easier to retrieve the summary file from that incorrect subdirectory, trim the unnecessary data from that file using a word processor, combine the remaining data with the CPEAKS.ALL file, and rerun the INPCAR program. If this is done, take care that the errant summary file, also called CPEAKS.n, does not overwrite the CPEAKS.n that already exists. If only a few data points are missing, it is generally not too much trouble to simply write the correct values on the printout and add those values manually to the dBase files at the same time the flags and other corrections are made.

Scan the deposit areas for incorrect entries. Circle the incorrect entries to insure that corrected values replace those currently in the database.

Scan the filter IDs for multiple entries of ID numbers. Under normal conditions, the only times multiple entries should occur are reruns and replicates. All multiple entries must be flagged to indicate the reason for their existence. If no flags appear, draw an underline to act as a reminder to look for the reason as the files are reviewed.

Scan for missing runs. The most common example is the first run being aborted or lost for some reason, and the only entry in the dBase file is the second run. An entry for the first run must be inserted, flagged as invalid, and labelled as to the reason it was invalid. All punches taken from the filters MUST be accounted for.

Scan the OC and EC columns looking for unusually high or low values. At this time make sure that the field blanks and/or lab blanks are all close to one another. Circle any possible outliers for further investigation.

Finally, pull the analysis files and go through the analysis summaries and thermograms one by one. At this time, resolve all circled items and all missing flags. Determine if analyses flagged by the operator as "SL" or other such flags are legitimate. If not, draw a line through the flag to indicate it should be removed. If the sample should be rerun, add it to a rerun list. If the analysis has some anomaly but still appears to be legitimate, either flag or add notes to the comments field as appropriate. Analysis flags are defined in Section 6.4. All samples flagged as invalid must have an entry in the comments field to describe why the sample is invalid. The following notes and comments are commonly used:

Comments	Description
"Anomalous laser"	Despite good initial laser, laser signal drifted above initial laser signal before dropping (typical of auto emissions)
"Operator error"	Used with "v" flag; operator missed

	pushing boat in, pushed abort button, pushed manual advance button at an inappropriate time, etc.
"Analyzer malfunction"	Used with "v" flag; analyzer malfunction or problem beyond the control of the operator such as plugged FID, broken oven heater, etc.
"Poor replicate"	Replicate is outside the normal criteria, but no reason can be found for the discrepancy.
"Poor initial laser"	Used with "v" flag; severe coupling or boat not pushed in time for calculation of initial laser signal.
"Sample contaminated"	Used with "v" flag; rerun of sample yields lower values or different peaks. Typically used with blanks or reruns of replicates.

All flags generated during the analysis must be either converted to the flags and/or comments listed above or removed. These flags are temporary flags only and are not recognized as legitimate analysis flags at DRI.

After all thermograms have been reviewed and all possible reruns have been identified, post the rerun list in the carbon room and have the reruns done as soon as possible. Review the data from the reruns, looking for inconsistencies. Insure that the reasons for the rerun have been addressed. Mark the printout with the new values for manual insertion into the dBase file. Previous runs must be flagged as invalid or the reruns flagged as replicates.

Finally, all comments, flags, insertions, and other changes made to the printout are entered into the dBase file. After all changes are made, generate a new printout. Label the new printout with the file name and printout date. Forward a copy of the printout and the dBase file on disk to the person putting the final report together.

APPENDIX 8: Maintenance Checklist (Annual Site Visit)

Maintenance Checklist.

	clean always	repair if defective	replace if defective	comments
PUMPHOUSE				
Enclosure	X			
Temperature switch			X	
Contractor box relays			X	
Contractor box wiring			X	
Cooling fans			X	
Pump: capacitor			X	
Pump: diaphram			X	
Pump: piston			X	
Pump: flapper valve			X	
Pump: gasket			X	
Pump: sponge filters			X	
CONTROLLER				
Enclosure	X			
Cooling fans			X	
Control clock			X	
Fuse			X	
Relays			X	
Delay switch			X	
Transformer			X	
30-Minute bypass switch			X	
Wiring		X		
FILTER MODULE A				
Enclosure	X			
Solenoid valves			X	
Magnehelic			X	
Vacuum gauge			X	
Hoses		X	X	
Fittings			X	
Elapsed time meters			X	
Toggle switches			X	
Inlet	X			
Cyclone	X			
Electrical connections		X		
Wiring		X		
Cyclone O-rings	X		X	
Nuts and bolts (tighten)			X	

	clean always	repair if defective	replace if defective	comments
FILTER MODULE B				
Enclosure	X			
Solenoid valves			X	
Magnehelic			X	
Vacuum gauge			X	
Hoses		X	X	
Fittings			X	
Elapsed time meters			X	
Toggle switches			X	
Inlet	X			
Denuder (Module B)			X	
Cyclone	X			
Electrical connections		X		
Wiring		X		
Cyclone O-rings	X		X	
Nuts and bolts (tighten)			X	
FILTER MODULE C				
Enclosure	X			
Solenoid valves			X	
Magnehelic			X	
Vacuum gauge			X	
Hoses		X	X	
Fittings			X	
Elapsed time meters			X	
Toggle switches			X	
Inlet	X			
Cyclone	X			
Electrical connections		X		
Wiring		X		
Cyclone O-rings	X		X	
Nuts and bolts (tighten)			X	
FILTER MODULE D				
Enclosure	X			
Solenoid valves			X	
Magnehelic			X	
Vacuum gauge			X	
Hoses		X	X	
Fittings			X	
Elapsed time meters			X	
Toggle switches			X	
PM10 Inlet	X			
Cassette manifold	X			
Electrical connections		X		
Wiring		X		
O-rings	X		X	
Nuts and bolts (tighten)			X	
STAND				
Structure		X		
Sunshield and bench		X		

TECHNICAL REPORT DATA
(Please read Instructions on the reverse before completing)

1. REPORT NO. EPA-450/4-90-008a	2.	3. RECIPIENT'S ACCESSION NO.
4. TITLE AND SUBTITLE IMPROVE Progress Report Appendix A		5. REPORT DATE May 1990
		6. PERFORMING ORGANIZATION CODE
7. AUTHOR(S) Marc Pitchford, David Joseph		8. PERFORMING ORGANIZATION REPORT NO.
9. PERFORMING ORGANIZATION NAME AND ADDRESS Environmental Monitoring Systems Laboratory, U. S. Environmental Protection Agency, Las Vegas, Nevada 93478		10. PROGRAM ELEMENT NO.
		11. CONTRACT/GRANT NO.
12. SPONSORING AGENCY NAME AND ADDRESS Office of Air Quality Planning and Standards, U.S. Environmental Protection Agency, Research Triangle Park, North Carolina 27711		13. TYPE OF REPORT AND PERIOD COVERED
		14. SPONSORING AGENCY CODE

15. SUPPLEMENTARY NOTES

16. ABSTRACT

In Section 169A of the Clean Air Act as amended August 1977, Congress declared as a national goal "the prevention of any future, and the remedying of any existing, impairment of visibility in mandatory class I Federal areas which impairment results from manmade air pollution."[1] Mandatory class I Federal areas are national parks greater in size than 6000 acres, wilderness areas greater in size than 5000 acres and international parks that were in existence on August 7, 1977.[2] This section required the Environmental Protection Agency (EPA) to promulgate regulations requiring States to develop programs in their State Implementation Plans (SIPs) providing for visibility protection in these areas. EPA promulgated these regulations on December 2, 1980.[3]

This report summarizes the progress made to date in developing and implementing the interagency monitoring network which supports the effort, Interagency Monitoring of Protected Visual Environments (IMPROVE).

17. KEY WORDS AND DOCUMENT ANALYSIS

a. DESCRIPTORS	b. IDENTIFIERS/OPEN ENDED TERMS	c. COSATI Field/Group
Visibility monitoring State Implementation Plans (SIP) Class I Federal Areas		

18. DISTRIBUTION STATEMENT	19. SECURITY CLASS *(This Report)*	21. NO. OF PAGES
	20. SECURITY CLASS *(This page)*	22. PRICE

EPA Form 2220-1 (Rev. 4-77) PREVIOUS EDITION IS OBSOLETE