PROCEEDINGS

VOLUME 4

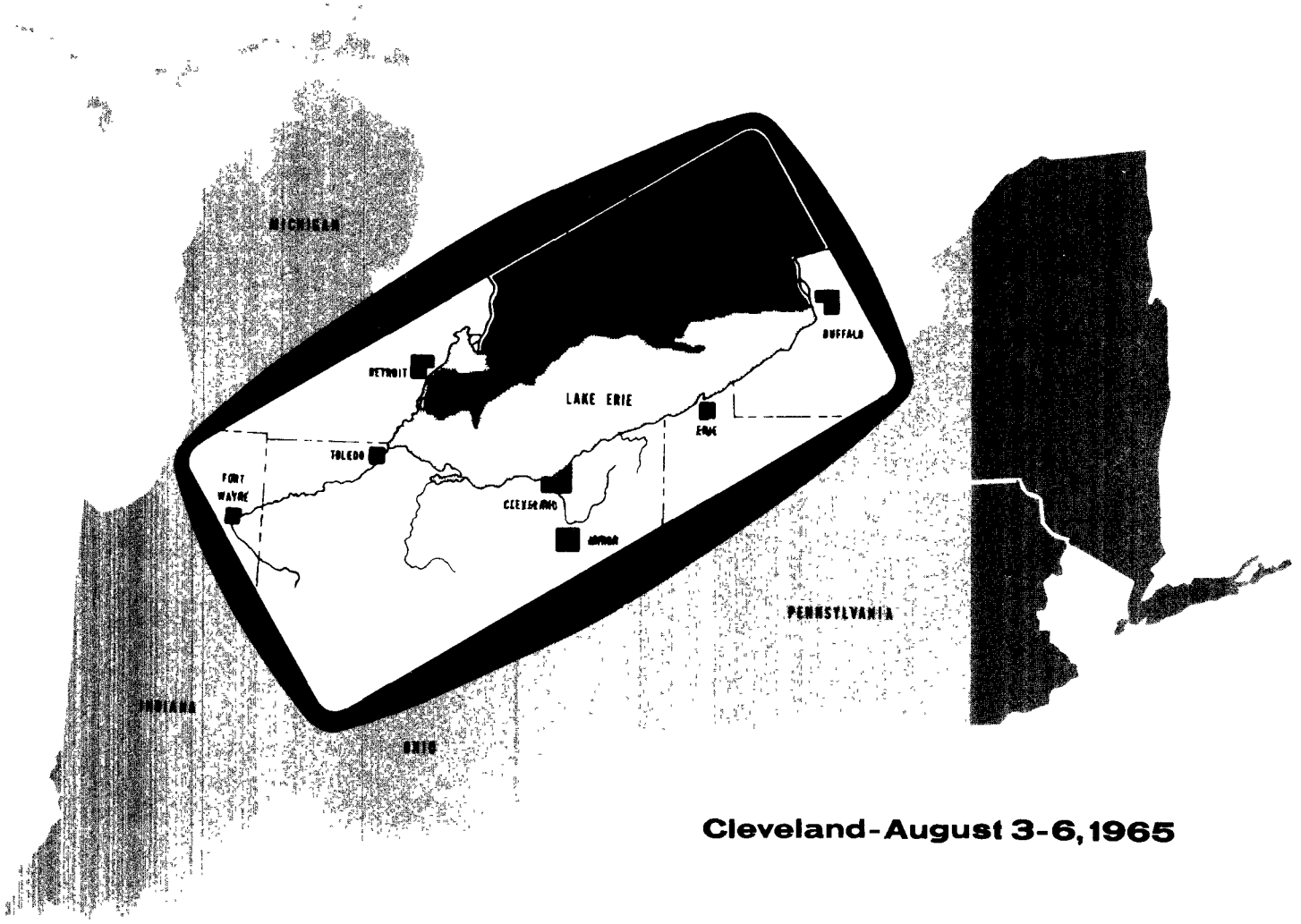

Cleveland-August 3-6, 1965

Conference

In the matter of Pollution of Lake Erie and its Tributaries

U. S DEPARTMENT OF HEALTH, EDUCATION, AND WELFARE

C O N T E N T S

C O N T E N T S

C O N T E N T S

THURSDAY, AUGUST 5, 1965

9:30 A. M.

(Mr. Robert D. Hennigan, Conferee and Director, New York State Bureau of Water Resource Services, was not present.)

MR. STEIN: May we reconvene?

I will call on Dr. Arnold for a continuation of the Ohio presentation.

Dr. Arnold.

DR. ARNOLD: Mr. Stein, we should like to proceed this morning with Cleveland's presentation, the first part of which will be given by Mr. Vincent DeMelto, Director of the Department of Public Utilities.

Mr. DeMelto.

Vincent M. De Melto

STATEMENT OF

VINCENT M. DeMELTO

DIRECTOR OF PUBLIC UTILITIES

CITY OF CLEVELAND

MR. DeMELTO: It is appropriate at this time to review Cleveland's efforts toward water pollution abatement and place them on record so that a proper perspective can be achieved as to how much has been done, how much is being done, and the future program.

In the early days of Cleveland's development, little thought was given to sewage treatment, and the disposal problem was solved merely by providing short lateral sewers which discharged either directly or indirectly into the river or lake. Similarly, the furnishing of water was then simplified by the use of wells or springs and, later, by the construction of relatively short intakes into the lake. As the City grew, the purity of its water supply became a matter of vital concern and in 1896, a Commission of Engineers recommended and I quote, and this is the beginning of combined sewers as far as the City of Cleveland is concerned:

Vincent M. De Melto

"That a combined system of sewers be provided for the main portion of the City, and a separate system of sewers for the low level section along the Cuyahoga River; that the permanent points at which the Cleveland water supply is taken and the sewage is discharged, should not be less than ten miles apart, measured along the shore; that a system of intercepting sewers be constructed to collect the sewage of the entire City and discharge it into Lake Erie through a submerged outfall not less than one-half mile from shore, and some ten miles easterly of the proposed water intake; and that the sewage should be screened on the shore at the effluent gate house,carried out into the lake by submerged pipes, and discharged at different points as near the lake bottom as practicable."

In conformity with this recommended plan, a large intercepting sewer (with outlet 13'-6" in diameter) was constructed from near the mouth of the Cuyahoga River to East 140th Street on the Lakefront. This sewer, which has been in operation since 1905, intercepts the flow from combined trunk sewers extending inland. Coarse bar gratings were installed in the terminal basin, and a 63-inch steel outfall pipe was extended approximately one-half into the lake. The topography of the area

and the hydraulic gradient of the interceptor resulted in this point of discharge being located some two miles west of that recommended by the Commission; and the siphons originally proposed for crossing the Cuyahoga River Valley were never constructed. It is important to note that the Commission recommended combined sewers for the main portion of the City, and that interceptors have been designed to receive not only the dry weather sewage flows, but also the first flush from street washings and continued contributions of storm water (up to rates approximately 1-1/2 times the average sewage flow) - all excess amounts being discharged automatically into nearby watercourses, by means of regulators or overflow weirs. It is noted, too, that the first public water supply was taken from Lake Erie in 1856 (through an intake only 300" in length); that early improvements in the quality of the water were obtained, simply by extending new intakes farther and farther into the lake; and that treatment of the raw water was first provided, by chlorination in 1911 and by filtration in 1918.

In 1904, a new water intake tunnel 9'-0" in diameter and five miles in length was placed in operation; but even then, it was apparent that untreated discharge of domestic sewage, industrial wastes and

surface runoff from the rapidly growing area were causing objectionable conditions in the river and inshore waters of the lake. Accordingly, in 1911, R. Winthrop Pratt was commissioned by the City to study sanitation requirements as regards water supply and sewage treatment. It was he who recommended "that the entire metropolitan area be divided into four major sewerage districts, and that each district (except the Low Level) should be provided with a main intercepting sewer to deliver the sewage to appropriate treatment sites; that the sewage of the Westerly and Easterly Districts should be treated at two lakefront sites, located respectively at W. 58th St. and E. 140th St., while the sewage from the remainder of the City should be treated at a site located on the Cuyahoga River; and that partial treatment of the sewage should be provided at the lakefront sites, while complete treatment should be used at the Southerly site."

PLATE I which is in this report, shows the Cleveland Metropolitan Area of Sewerage Service as it now exists, with the four major sewerage districts identified as Westerly, Easterly, Southerly and Low Level.

These recommendations resulted in the early adoption of a sanitation policy which depends upon filtration and disinfection for the protection of the

water supply, but which supplements such measures (and also provides for the elimination of nuisances and the protection of bathing beach waters) by treatment of the sewage.

Such a policy is still being followed as a minimum; but, as the result of more recent studies of the water supply and sewerage problem (by J.W. Ellms in 1929, and by Geo. B. Gascoigne in 1924 and 1931) so-called "complete" treatment of the sewage has been provided at the Easterly site.

Mr. Pratt's recommendations in 1912 led to extensive experimental and research work, all directed toward establishing the accomplishments of the then known methods of sewage treatment, and their application to Cleveland conditions.

A demonstration plant was constructed at the W. 58th St. sewer outlet, and Fine Screen Tests of a full size unit (of the Reinsch-Wurl type) were conducted for a year. These tests demonstrated that fine screens were capable of removing only from 5 to 10 per cent of the suspended solids, and the question was raised as to the need for additional treatment. After extensive additional studies and consideration of the degree of treatment that should be provided, it was

decided that conditions at the two lakefront sites called for effective sedimentation of the sewage (at least 35 per cent removal of suspended solids) - supplemented by disinfection during the bathing season.

Experimental work was also carried out during 1916-17 demonstrating the applicability of the newly discovered Activated Sludge Process for testing Cleveland sewage, and much original and valuable information was obtained that helped to furnish the basis for the subsequent design of the Easterly and Southerly Plants.

To accord with the earlier determinations of policy, two lakefront plants were originally placed in operation in 1922, and the Southerly Works in 1928. Partial treatment was provided at the Westerly site by means of hand-raked, double bar gratings, hopper bottomed grit chambers, 100 minute sedimentation tanks of the Imhoff type, and disinfection (during the bathing season) - with dispersion of the settled effluent (along with the digested sludge) one-half mile offshore, through a tapered section of concrete outfall pipe. This plant was designed to serve 288,000 persons, and to treat an average sewage flow of 36 m.g.d. Additions, consisting of mechanically-raked bar screens, detritor, pre- and post-

chlorination equipment, separate sludge digestion tanks, conditioning equipment, filters and incinerators, were made in 1932 and 1938. In 1956 a modernization and replacement program was carried out that included additional mechanically-raked screens and shredder, detritors, preaeration and flocculation tanks and facilities for grit conveyance to the sludge cake incinerators. The original Imhoff tanks are still in operation only as fresh solids sedimentation tanks.

PLATE II shows the present general layout of this Westerly plant as it now exists.

The first plant at the Easterly site was designed to treat an average sewage flow of 92 m.g.d., and to serve a connected population of 575,000 persons. It comprised hand-raked, double bar gratings, hopper bottomed grit chambers, and disinfection equipment - with dispersion of the effluent into the lake (through an 84-inch concrete outfall pipe). These "preparatory" devices were intended to be used as a part of a more complete plant, the design of which would depend upon results accomplished in the operation of the smaller plant at the Westerly site. The Easterly Works were expended in 1938, to provide complete treatment of the sewage, with the discharge of the final effluent at the break-

water line. This activated sludge plant was then designed to serve 770,000 persons, and to treat an average sewage flow of 123 m.g.d. In addition to the original facilities, it comprised comminutors, detritors, pre- and post-chlorination equipment, settling tanks, aeration tanks and sludge settling tanks - together with pumping equipment for delivery of the mixed primary and excess activated sludge, through a 12-inch force main thirteen miles long, to the Southerly site for final treatment and disposal. There have been only minor alterations and additions to this plant since 1938. These have included providing additional flow channels for the Collinwood sewage, grit washing equipment, and aeration tanks frothing control facilities.

PLATE III shows the present general layout of the Easterly plant.

At the Southerly site (about 10 miles above the mouth of the Cuyahoga River), a complete treatment plant was first placed in operation in 1928. This included bar gratings, grit chambers, 120 minute Imhoff tanks, dosing tanks, trickling filters and covered sludge-drying beds - designed to serve 280,000 persons, and to treat an average flow of 35 m.g.d. Plant capacity was increased (to 45.1 m.g.d.) in 1938; by the addition

of abbreviated aeration tanks; by enlarging the trickling filter distribution system; and by remodeling the humus tanks into magnetite filter units. At this time, also, sludge digestion tanks, conditioning equipment, filters and incinerators were provided, for the combined disposal of solids from the Easterly and Southerly sewage.

Rapid growth of the Southerly District coupled with progressive clogging, and the high construction cost of trickling filters, necessitated the construction from 1950 to 1955 of a modern activated sludge plant on this site. In the conversion, the dosing tanks, trickling filters and magnetite filters were abandoned; and the existing Imhoff tanks were used to clarify supernatant liquor from the separate heated digestion tanks.

As of 1960, the Southerly Works included bar gratings and grit chambers (to be used for storm flows), comminutors, detritors, pre-settling tanks, aeration tanks, sludge settling tanks, digestion tanks, elutriation tanks, conditioning equipment, filters and incinerators. This plant was designed to serve a connected population of 455,000 persons (as of the year 1970), and to treat an average flow of 68 M.G.D. As previously mentioned,it includes facilities for the disposal of sludge from the

Easterly plant.

PLATE IV shows the present general layout of the Southerly plant and also shows the units that are being replaced, enlarged and improved.

To briefly summarize, as of 1960 the three (3) Cleveland waste-water treatment plants represented an investment of approximately $32 million and have been designed to serve a total combined population of 1,513,000, and to treat an average total flow of 227 M.G.D. Approximately 84% of the total design capacity provides for complete treatment using the activated sludge process.

Cleveland's waste water treatment plants have long provided Metropolitan service, and twenty-seven (27) suburbs of Cleveland with approximately 459,000 persons are thus presently served.

Vincent M. De Melto

WESTERLY WASTEWATER TREATMENT PLANT TREATMENT REQUIREMENTS AND PERFORMANCE

The Westerly Plant provides primary treatment of the sewage. The last major improvements at this plant which were installed ten years ago, at a cost of about a million dollars, were designed on the basis that the plant operational efficiency would be increased somewhat by the new pre-flocculation tank that was installed, but that basically, the treatment provided would still remain primary in character.

The plant is intended to relieve the load of pollution on the shore waters of Lake Erie, and at the same time prevent the discharge into the lake of floating solids which are offensive to the sight, and of settleable solids which may form sludge banks, and which due to putrefaction become offensive to both sight and smell.

The nearness of Edgewater Park bathing beach demands as great a degree of protection as possible against health hazards incident to sewage pollution, and to this end, the elimination of sludge deposits in the lake is a major goal. In summer, additional pro-

tection to the public health is provided by chlorination of the effluent.

Although the percentage of suspended solids removal is comparatively low compared to that which can be accomplished at a treatment plant designed to give "secondary treatment", it is a fact that most of the settleable solids are removed, and the fine almost colloidal suspended solids which are left are readily dispersed. The B.O.D. of the effluent is considered to have little deoxygenation effect on the diluting waters of the lake which are almost infinite in volume and tremendously large in dissolved oxygen content.

The present method of sludge disposal is positive and the residue is a reddish ash. The effect of the ash appears to be negligible when disposed of with the effluent to the lake through the outfall.

The purification results achieved are presented in condensed form for the period of 1960-1964 inclusively, in Table No. 1.

Of major interest is the fact that this plant operates appreciably below the design capacity, with some flow reductions anticipated in the near future. Although the suspended solids removal has been consistently in the

34-35% range, there has been a trend toward better effluent quality due to a less concentrated raw wastewater. This is the result of reduction of stockyard and meat processing activities in the Westerly drainage area.

Chlorination of the wastewater is practiced about 100 days during the summer starting usually about June 1st. Post-chlorination procedure provides for the attainment of 1 to 2 ppm. of residual chlorine remaining after 10 minutes of contact time. Operation data and testing results in Table No.2 indicate that the range for post-chlorination chlorine dosage varies from 5 ppm. to 8 ppm. and that there is a substantial amount of residual chlorine in the effluent a large part of the time. Coliform kills are high. Coliform concentrations in the chlorinated effluent are only presented for the year 1964 since there have been several changes in technique and statistical presentation in the past five years.

The degree of purification that may be necessary in the future at the Westerly Plant has been generally related with other nearby sources of pollution which should be abated, if the additional treatment provided at this plant is to be of any real value.

In particular, the effect of storm overflows from combined sewers, in Edgewater Park Beach are

believed to be the controlling factor as to the excessive microbial contamination of this beach. The nearby Cuyahoga River, at the present time, is a source of pollution of sufficient magnitude to effectively mask the results of higher degree of treatment, if provided at the Westerly Plant.

Commercial shipping and pleasure craft activities inside the breakwater are the cause of considerable continuing pollution which is difficult to control.

Notwithstanding the fact that under present conditions it is unlikely any demonstrable or recognizable improvement in sanitary conditions of the lake waters will be obtained by stepping up the degree of treatment at the Westerly Plant, there has been carried out in compliance with the conditions of the Permit issued by the State Water Pollution Control Board, a program of investigation of water quality in the outfall sewer area. In addition, pilot plant studies on the use of polyelectrolytes to increase sedimentation efficiencies have been made.

This summer, on an experimental basis, a polymer material is being added to all of the raw wastewater received at the Westerly Plant to determine the

increase in effectiveness of this plant in removing suspended matter.

The information and data obtained will be helpful in making an evaluation as to the cost of obtaining additional treatment by this method as against alternate methods that are available.

The City of Cleveland will increase the purification level of the Westerly Plant whenever it is clearly indicated that the character of the plant effluent is the controlling factor in obtaining water quality suitable for legitimate and significant uses, in the areas that are affected by this effluent discharge.

For the record, I want to say that we offer full disclosure of all our operations in these plants.

(Table Nos. 1 and 2 are as follows.)

TABLE NO. 1

WESTERLY WASTEWATER TREATMENT PLANT - YEARS 1960-1964

PURIFICATION RESULTS

	Daily Flow	Raw Sewage Analysis		Effluent Analysis		Reduction of Raw Sewage	
YEAR	Average M.G.	Susp. Solids ppm.	5 Day B.O.D. ppm.	Susp. Solids ppm.	5 Day B.O.D. ppm.	Susp. Solids %	5 Day B.O.D. %
1960	31.1	180	173	118	121	34.2	30.1
1961	31.5	184	165	122	118	34.0	28.4
1962	33.6	156	160	101	114	35.6	28.9
1963	31.5	159	167	104	116	34.8	30.5
1964	32.3	156	146	102	100	34.7	31.4
5 Yr.Avg.	32.0	167	162	109	114	34.7	29.9

TABLE NO. 2

WESTERLY WASTEWATER TREATMENT PLANT - YEARS 1960-1964

CHLORINATION RESULTS

YEAR	Days of Chlorination Number	Pre-Chlorination Dosage ppm.	Post-Chlorination Dosage ppm.	Average Residual Chlorine ppm.	Total Coliform per 100 ml. Geometric Mean
1960	90	2.88	6.84	1.92	--
1961	90	3.00	5.59	1.75	--
1962	91	2.29	8.06	1.95	--
1963	100	3.01	6.38	1.39	--
1964	102	3.29	5.27	1.96	23,700*

* Based on 21 samples, using Membrane Filter Method

Vincent M. De Melto

THE EASTERLY WASTEWATER TREATMENT PLANT TREATMENT REQUIREMENTS AND PERFORMANCE

The Easterly Plant site located at East 140th Street and Lakeshore Blvd. has long been utilized for studying wastewater treatment processes, raw sewage disposal and treatment of the sewage tributary to the Easterly district.

The sewage received at this site received practically no treatment until 1922 when the preparatory devices consisting of bar gratings and grit chambers were placed in service. There was also provided means by which the sewage during the bathing season could be disinfected, by means of chlorine.

The facilities and treatment provided at that time were based on the plan to establish from the operating records the efficiencies of certain treatment devices provided, particularly those for disinfection; and, in conjunction with the performance and operation records of the newly completed Westerly Plant, provide a background of information and data that would tend to show what addi-

tional treatment, if any, would be required.

Further study of the matter by a number of qualified engineers in 1927 and 1930, indicated that a high degree of treatment was warranted in order to proceed forward in a program of cleaning up the polluted frontage waters of the City and of affording protection to bathing and water supply sources. The protection of the planned future location of a raw water intake, four to five miles north of the Easterly site, to serve the proposed Nottingham Filtration Plant, was a major objective. Public support of the project was obtained, and a complete treatment plant of 123 M.G.D. capacity was placed in operation in 1938.

The purification results achieved by this plant for the period 1960-1964 are summarized in Table No. 3. Of particular interest and significance are the data relating to flows that show a steady reduction in volume from the 1960 value until this trend was reversed in 1964. It is believed that this flow reduction was caused by urban renewal activities and freeway construction. Average overall reductions of suspended solids and 5 day B.O.D. for the five year period were over 85%.

Chlorination of the effluent wastewater is

carried out from June 1st to about Labor Day. In recent years chlorination dosages have been increased substantially in order to obtain greater Coliform kills. Table No. 4 presents operation data and testing results. Of interest are the results for the years 1963 and 1964 as to the effect of higher residual chlorine in the effluent of the plant.

The location of the Easterly Plant, being adjacent to the White City bathing beach, poses a particularly difficult problem in trying to keep the waters of this beach safe for bathing and swimming. There are provided, in order to safeguard the plant from excessively high flows, overflow structures that automatically discharge excess mixed stormwater and sewage flows to the area immediately adjacent to the bathing beach.

A preliminary plan for enlargements, improvements and replacements for the Easterly Plant are under consideration. A detailed engineering study of the present and future requirements of this plant has been underway by the City's consulting engineers, and it is expected that this report will be submitted to the City in the very near future.

(Table Nos. 3 and 4 are as follows:)

TABLE NO. 3

EASTERLY WASTEWATER TREATMENT PLANT - YEARS 1960-1964

PURIFICATION RESULTS

YEAR	Daily Flow Avg. M.G.	Flow Given Comp. Treat. %	Raw Sewage Analysis Susp. Solids ppm.	Raw Sewage Analysis 5 Day B.O.D. ppm.	Effluent Analysis Susp. Solids ppm.	Effluent Analysis 5 Day B.O.D. ppm.	Reduction of Raw Sewage Susp. Solids %	Reduction of Raw Sewage 5 Day B.O.D. %
1960	121.6	98.2	199	188	25	17	86.5	89.5
1961	115.1	98.1	205	197	26	21	86.1	88.5
1962	114.3	97.8	177	178	26	19	84.6	88.3
1963	107.3	98.5	183	167	24	19	85.8	87.6
1964	112.8	98.4	150	176	21	17	85.2	89.1
5 Yr. Avg.	114.2	98.2	183	181	24	19	85.6	88.6

TABLE NO. 4

EASTERLY WASTEWATER TREATMENT PLANT - YEARS 1960-1964

CHLORINATION RESULTS

YEAR	Days of Chlorination Number	Dosage POST-Chlorination ppm.	Chlorine Average Residual ppm.	Total Coliform per 100 ml. Geometric Mean
1960	88	3.1	1.0	--
1961	85	3.4	0.9	--
1962	80	3.4	0.5	--
1963	89	4.1	0.4	6,000
1964	91	5.8	1.1	360

Total Coliforms determined by the Membrane Filter Method

Vincent M. De Melto

THE SOUTHERLY WASTEWATER TREATMENT PLANT TREATMENT REQUIREMENTS AND PERFORMANCE

The Southerly Plant was designed to provide treatment for sewage from the south central portion of the City together with that from a number of municipalities and large unincorporated areas.

The design concept of treatment requirements at this location have always included "high degree treatment" facilities. The need of protecting the Cuyahoga River against unsightliness, odor nuisance and oxygen depletion has been recognized as minimum requirements.

The increase of sewage flows in the Southerly District and disposal of the treatment plant effluent, represents additional loading on the oxygen content of the river, regardless of a high degree of treatment. These become especially critical when low stream flows occur.

The downstream uses and condition of the Cuyahoga River, especially in the navigation channel section, are abnormal, particularly in regard to temperature, oxygen depletion, natural reæration, and

rate of flow. It is also in this section of the river that the minimum oxygen level would occur from the effect of the Southerly Plant effluent discharge. It can be concluded that the present treatment needs at the Southerly Plant require even a higher degree of treatment than has been provided in the past. In order to properly treat the higher flows over the years, the sewage design capacity of this plant has been successively increased from 35 to 45 and is now 68 M.G.D. Design now going on will provide sewage treatment facilities for 84 M.G.D. for a population of 600,000 estimated to be served by the year 1980.

Starting in 1938, the processing of all raw sludge produced at the Easterly Plant, in addition to the sludge normally produced from Southerly sewage flows, has placed additional loads on the Southerly Plant and the Cuyahoga River. These loads have generally been in the form of digested sludge solids which could not be entirely disposed of by vacuum filtration and incineration using the units that were available. There has been under construction for the past two years, enlarged replacement sludge processing facilities which were designed and sized, so that these operations will have the least possible effect on the Cuyahoga River in the future.

OPERATION RESULTS 1960-1964

The operational results of the Southerly Plant for the period of 1960-1964 are given in condensed form in TABLE No. 5.

The overall reduction of suspended solids and B.O.D. that were achieved by this plant were consistently over 85%. The data presented, does not reflect the loss to the Cuyahoga River of digested sludge solids that were not handled by the plant's sludge processing facilities.

In summary, the City of Cleveland has always had as its objective the complete treatment of sewage received at the Southerly Plant site. It has consistently followed a policy of enlarging and modernizing this plant as the sewage flows have increased. It is now engaged in a construction program which will again update this plant at least to its estimated needs of 1980.

(Table No. 5 is as follows.)

TABLE NO. 5

SOUTHERLY WASTEWATER TREATMENT PLANT - YEARS 1960 - 1964

PURIFICATION RESULTS

YEAR	Daily Flow Average M.G.	Flow Given Complete Treatment %	Raw Sewage Analysis Susp. Solids ppm.	Raw Sewage Analysis 5 Day B.O.D. ppm.	Complete Treatment Effluent Analysis Susp. Solids ppm.	Complete Treatment Effluent Analysis 5 Day B.O.D. ppm.	Raw Sewage Reduction Susp. Solids %	Raw Sewage Reduction 5 Day B.O.D. %
1960	61.3	92.2	213	144	20	18	86.1	87.1
1961	60.3	94.5	203	150	20	19	85.7	86.9
1962	65.3	90.0	217	184	18	15	86.7	86.1
1963	63.7	94.1	206	181	19	17	87.1	88.3
1964	65.5	89.2	194	160	17	20	85.4	85.0
5 Yr.Avg.	63.2	92.0	207	164	19	20	86.2	86.7

OVERALL PURIFICATION RESULTS

The combined overall purification results for the past five (5) years achieved by the Cleveland Plants can be summarized as follows:

Average daily flows	202.5 to 214.0 M.G.
% of flows that received complete treatment	80.9% to 82.8%
Suspended Solids reduction	77.9% to 79.5%
5 Day B.O.D. reduction	79.1% to 80.5%

TREATMENT PLANT ENLARGEMENTS AND IMPROVEMENTS PROGRAM

In 1961, in connection with a sewerage service rate study involving Cleveland and all of the suburbs tributary to the Cleveland sewerage system, preliminary enlargement and improvement plans for the Easterly and Southerly Plants were agreed to, so that financial support of this construction program could be included in the rate structure.

Vincent M. De Melto

At that time the estimated costs for improvements to these two (2) plants were as follows:

Easterly Plant	$ 4,657,000
Southerly Plant	14,387,000
Total	$19,044,000

The City of Cleveland has since then gone ahead with a construction program based on more detailed studies of the needs.

The following contracts, equipment, and services have either been completed or are in the process of construction:

1961 & 1962

Cont. No. 127 - Easterly Plant - Foam Control

Cont. No. 128 - Easterly Plant -
- Grit Handling Facilities
- Sludge Line Blowoff Improvements
- Grayton Road Sewage Pumping Station
- Engineering Study on Sewers
- Various new equipment, meters & services

TOTAL $ 756,021

Vincent M. De Melto

1963

Cont. No. 132 - Southerly Plant - Sludge Burning Installation)	
Cont. No. 133 - Southerly Plant - Sludge Filter Installation)	$6,035,711

1964

Cont. No. 129 - Southerly Plant Flood Protection Facilities	$ 481,243

1965 - up to July 1 st.

Cont. No. 131 - Southerly Plant - Elutriation Tanks	$1,567,709
TOTAL	$8,840,684

The following contracts are scheduled for the latter half of 1965:

Cont. No. 130 - Southerly Plant - Imhoff Tanks Conversion & Sludge Heating Facilities, Replacement	$3,450,000
Cont. No. 134 (Under Design) - Southerly Plant New Primary Tanks	1,437,500
TOTAL	$4,887,500

Vincent M. De Melto

1966 Planned Construction

Southerly Plant - Additional Aeration Facilities	$2,530,000
Easterly Plant - Primary Settling Tanks Enlargement and other improvements.	3,680,000
TOTAL	$6,210,000

SEWER OPERATIONS

AND MAINTENANCE

The Division of Water Pollution Control operates the wastewater treatment plants, and since 1963, has operated and maintained the Cleveland sewer system.

There is every effort made to operate the sewer system in a manner compatible with the design, and to provide sufficient surveillance and inspection of the storm outlets so that outages are discovered and corrected quickly. This matter in particular has been given additional attention for some time. It is believed that the unification of operation and maintenance of sewers and treatment plants in one division has brought about a better understanding and appreciation of the function

of each. Cooperation between these two functional groups has increased substantially and has led to greater efficiency in the use of available facilities and equipment. There is no doubt but that pollution abatement efforts have been aided by this organization change. This change was ordered by Mayor Locker.

Recently through the efforts of Mayor Locker the Division of Sewage Disposal was changed to the Division of Water Pollution Control. The additional responsibility for elimination, control and regulation of water pollution in or upon or within the City of Cleveland, further centralizes within one division the activities relating to water pollution abatement and control. There has been to date only a modest beginning of the activities that are believed essential in order to discharge these duties properly. However, there is every intention to plan, staff and carry out an adequate program that will complement the older water pollution abatement and control activities of the City of Cleveland and provide a well rounded and organized effort in this important matter.

It is my opinion that the City of Cleveland has been carrying out a program of water pollution abatement and control that has been continuous and effective, particularly in the area of wastewater treatment. Even

greater efforts to solve this problem will be made by the City of Cleveland as more data and information is developed relating, and identifying specific pollution loads to water quality now available. It is essential that future water quality objectives required for recreational uses, be related to the necessary construction programs and their cost.

The Cleveland Metropolitan water pollution problem is part of the Lake Erie problem. Both should be solved together on the basis that each community affecting Lake Erie carry out a program of abatement and control that is coordinated with an overall plan for attainment of the desired water quality objectives.

Thank you.

(Maps attached to above report are as follows:)

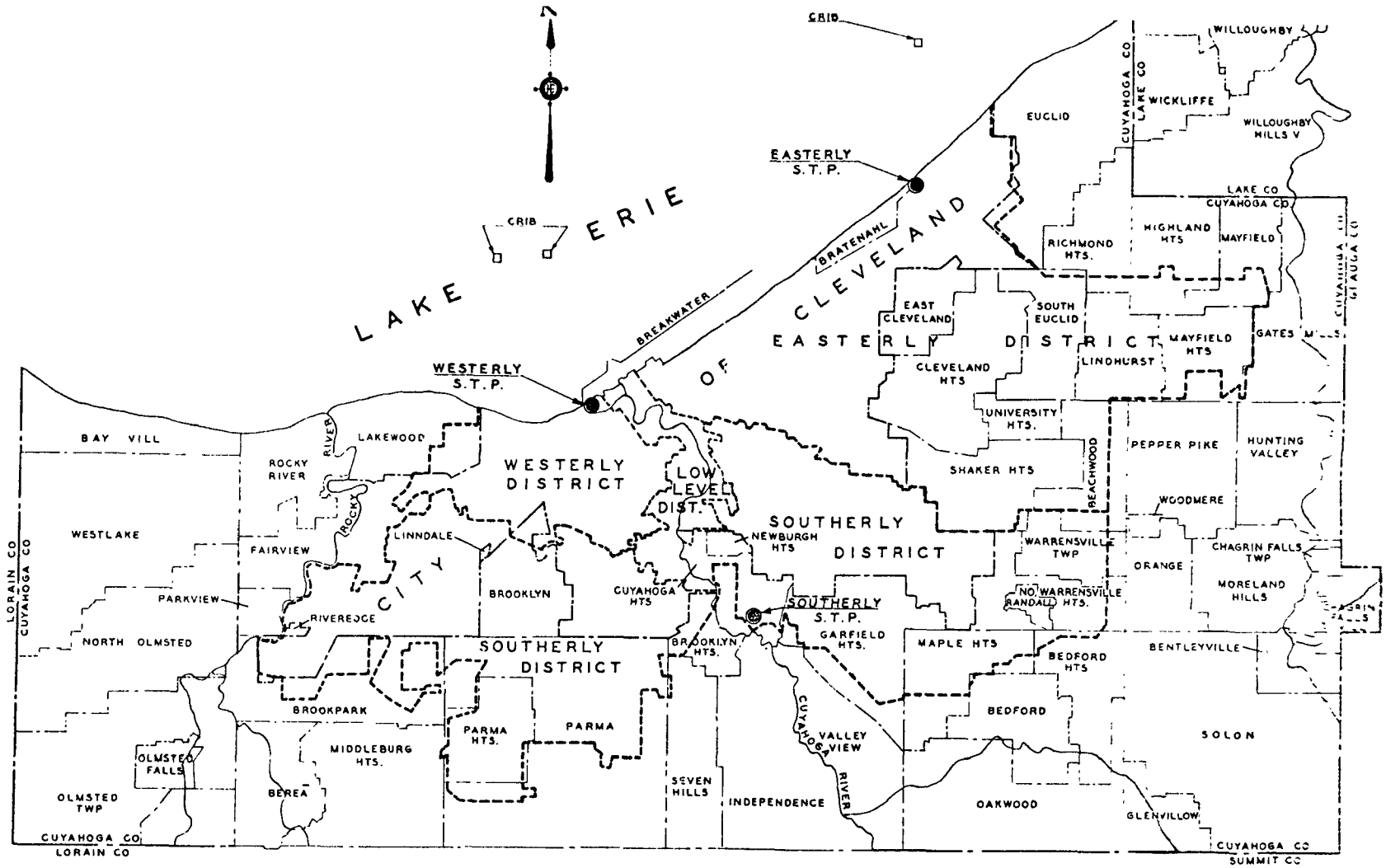

LEGEND

POLITICAL SUBDIVISIONS

SEWAGE TREATMENT PLANTS

SERVICE AND DISTRICT BOUNDARIES

CLEVELAND, OHIO

METROPOLITAN AREA OF SEWERAGE SERVICE

SCALE IN MILES

2 1 0 2

PLATE-I

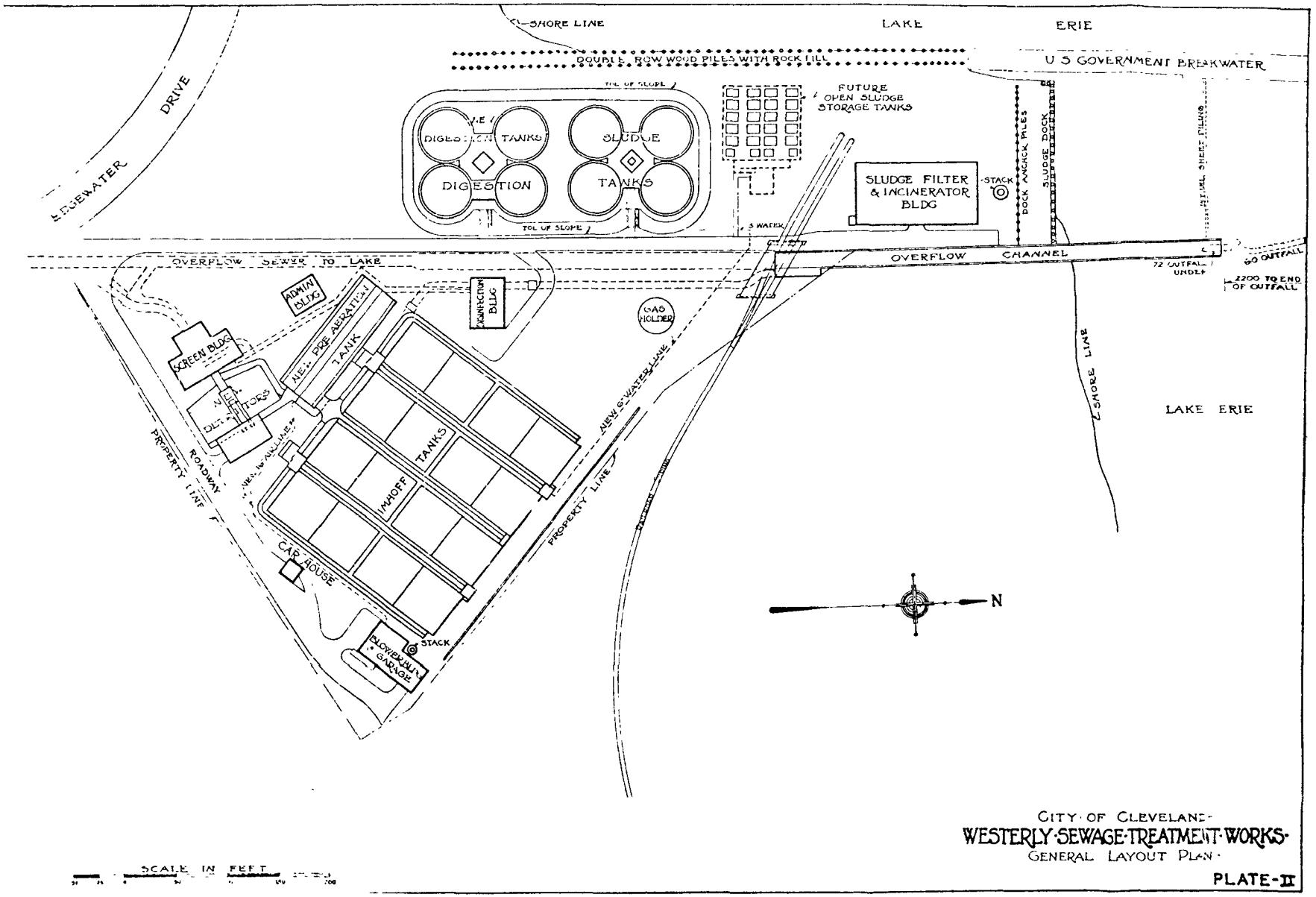

CITY OF CLEVELAND
WESTERLY SEWAGE TREATMENT WORKS
GENERAL LAYOUT PLAN

PLATE-II

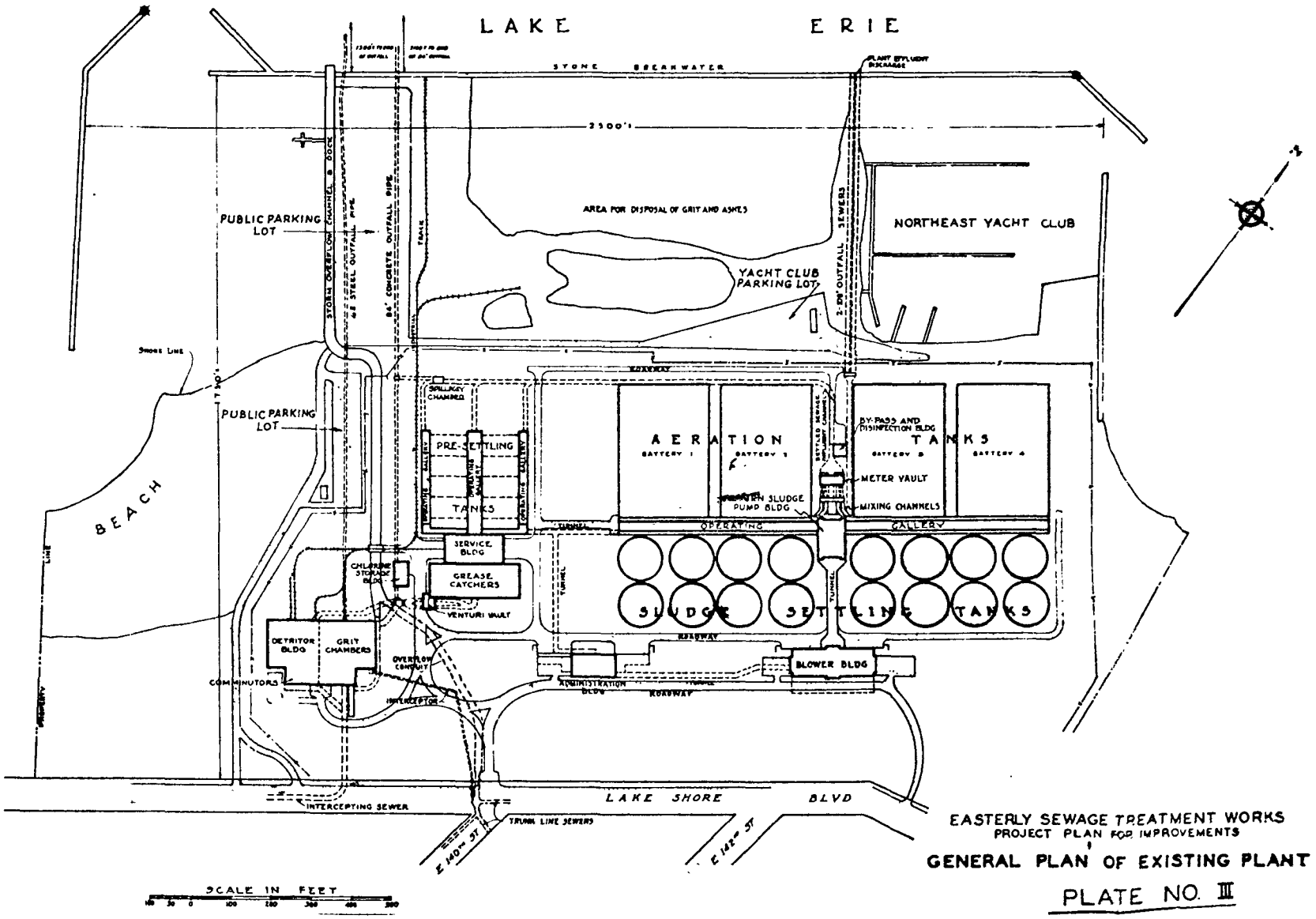

EASTERLY SEWAGE TREATMENT WORKS
PROJECT PLAN FOR IMPROVEMENTS

GENERAL PLAN OF EXISTING PLANT

PLATE NO. III

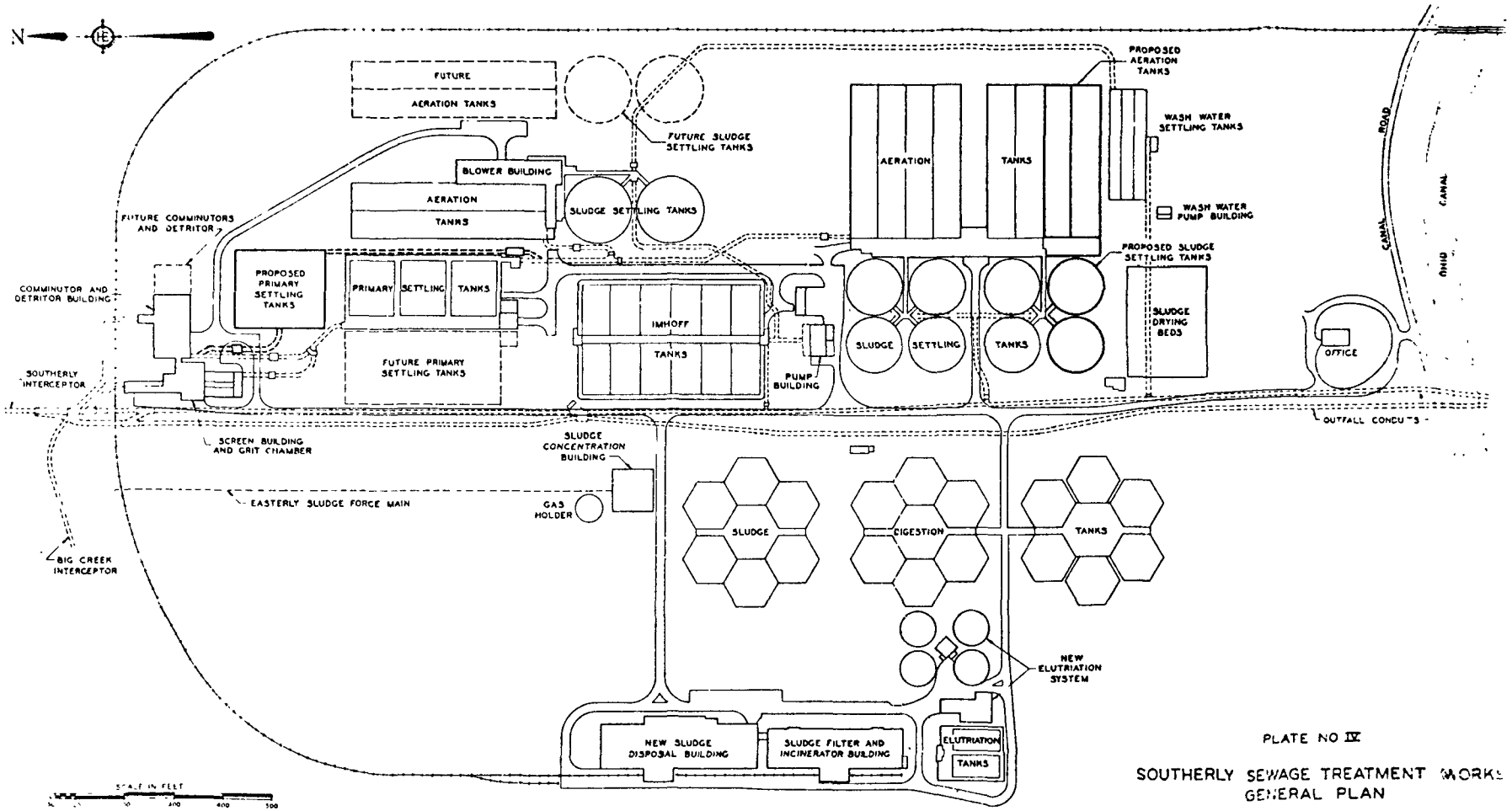

PLATE NO IV

SOUTHERLY SEWAGE TREATMENT WORKS
GENERAL PLAN

Vincent M. DeMelto

MR. STEIN: Thank you very much.

(Applause.)

MR. STEIN: Perhaps we should ask for comments and questions now, before the Mayor gets up, or would you rather speak first?

MAYOR LOCHER: I would rather speak because I have another meeting, if it is agreeable with the panel.

MR. STEIN: Yes.

Dr. Arnold, the Mayor would like to speak first before we ask questions.

DR. ARNOLD: We will next hear from the Honorable Ralph S. Locher, Mayor of the City of Cleveland.

Ralph S. Locher

STATEMENT OF

HON. RALPH S. LOCHER

MAYOR, CITY OF CLEVELAND

MAYOR LOCHER: Mr. Stein, distinguished members of the panel, and Ladies and Gentlemen:

Everyone in this room knows how water pollution can be stopped, but, likewise, everyone in this room recognizes, I believe, that it will cost a great deal more to restore our waters to their original quality than any local government can afford. Indeed, unless all units of local government in combination with States, and Federal Government, and even Canada work together, this international problem will never be resolved. And it would be unrealistic to believe that one community or county or state will tax its people to accomplish a satisfactory result knowing that its efforts might be nullified by less sacrificial neighbors.

When Cleveland was surveyed by Moses Cleveland in 1795, the Cuyahoga River and the other streams tributary to Lake Erie were clean and bright and clear. Fifteen per cent of the soil was open land, and 85 per cent was covered with trees. Even silt was not being

washed into Lake Erie in any appreciable quantity. Now the reverse is true. Eighty-five per cent of the area in the entire State of Ohio is open land, and in the Cleveland area the percentage is even higher. And where before there had been forest and meadow, there now is a heavy population, a great complex of industry, and effluents of every imaginable character being washed into the Lake through streams that theretofore had been clean and pure.

The cooperation that I referred to above will be meaningless unless millions upon millions of dollars, perhaps billions of dollars are invested in this mammoth job of correcting the breach of trust which man has been guilty of throughout the nation, and more specifically in the Lake Erie Basin.

We have been bad stewards of what God has provided for us. What is more, we have abused what was given to us.

Indeed, we are in the age of the supersonic jet and in an era when at the cost of millions of dollars we are sending rockets to the moon and Mars which send back pictures millions of miles, and yet, we cannot seem to find the method of neutralizing industrial and human wastes. This age could well be known as the one in which

Ralph S. Locher

America is shooting rockets to the moon, while we stand ankle deep in sewage.

A relatively few years ago when it was determined necessary to expedite the construction of freeways, the old matching formulas were discarded; they were obsolete. Similarly, with regard to mass transit, the national Administration and the Congress determined that millions of dollars of Federal monies were needed to match these of the local community.

The urban renewal and redevelopment programs, land grants to colleges going back hundreds of years now, and aids to education; all these issues have been determined to be worthy of heavy Federal participation, and rightfully so.

All these aims and objectives that I have just related cut across municipal, county, and state lines. The war against water pollution and air pollution transcends those same boundaries. The very nature of this conference with the United States Government and panel composed of students of the problem from several states, proves the nature of this problem.

The city of the future must be made livable, bright, and appealing. Such negative factors as air pollution and water pollution are a blight upon our very

lives.

Cities have traditionally been the home and the meeting place and the source of ideas in our society, and if the Great Society is to be achieved, the twin scourges of air and water pollution must be stamped out. Cities must be a place for human living for human beings. We cannot be concerned only with the quantity of material things, but rather we must consider the quality of our lives. Hence, the aesthetic values loom ever larger and larger, day by day.

A homely simple illustration: The City of Cleveland is about to build two new marinas. Plans are being drafted. At my insistence, and I should say the administration and the Council, fishing piers are to be provided, because more and more of the elderly, in their leisure hours, and the young people, desire fishing as one of their diversions.

So I wrote to Chicago and I asked about the fishing situation. It is common knowledge that the fishing is not good. I hear it from my neighbors and from my friends. And this is what they wrote back:

"A marked decline has occurred in the commercial catch of blue pike."

It happens that pike and pickerel are my favorites.

Ralph S. Locher

"The production has been around 15 million pounds for many years. In 1958, the catch amounted to 1.4 million pounds, and then it declined to 70,000 pounds in 1959, and it was only 12,000 pounds in 1960. Only a few blue pike were caught in 1963. Most of the fish are more than ten years old."

As I stated earlier, the water pollution problem is national in scope, and practically all sections of the country are concerned with it. In the Great Lakes area, a study of the problem was started over three and a half years ago on Lake Michigan and the Illinois River Waterway. A Lake Erie Study by the United States Public Health Service is still underway after over two years of sampling and obtaining data. It is hoped that the information and data that will be available from the Lake Erie study will help Cleveland solve its local problems, so that Cleveland's efforts will be meaningful and compatible to the overall Lake Erie clean-up program.

This is the third Federal conference to be held on the Great Lakes this year. The Detroit River conference which was held just recently, was of great interest to us, since it was concerned with the great quantity of pollution matter discharged into the western end of Lake Erie. The water pollution problem of Lake

Erie is of interstate and international concern and will be solved only when it is approached on that basis.

Cleveland considers the tremendous supply of water in Lake Erie as the most important resource and asset of northern Ohio, and it is a certainty that this resource will become more and more valuable with the passage of time. The present shortage of water on the east coast brings out dramatically the practically inexhaustable supply of water at Cleveland's doorstep.

It behooves Cleveland to do everything possible to preserve and protect the quality of this magnificent water supply. Our Water Department is the largest potable water supplier in Ohio and also on Lake Erie. It serves almost 20 per cent of the population of Ohio.

Cleveland's efforts to provide a water supply of high quality have been eminently successful. A recent two year study by U. S. Geological Survey of the water quality of the nation's 100 largest cities, indicates that Cleveland's raw water supply and treated water delivered to its customers, are rated as among the best -- and may I add that our water rates are the lowest of any large city in the United States.

The real proof, however, of the quality of a water supply lies in the health of the community it

serves. Our Cleveland Health Department reports that the water supplied to the Cleveland Metropolitan area is of the highest quality, and that their sampling and testing records as well as the health statistical records, indicate that this condition is continuously maintained.

Cleveland, by virtue of its location on Lake Erie, at the mouth of the Cuyahoga River, benefits also by the use of these waterways for transportation, delivery and transfer of bulk commodities so essential to local industries. The Lake, besides being a source of water supply for domestic use, also provides large quantities of water for industrial use, and is valuable for recreational purposes.

Moreover, the same lake and river are the only possible points for disposal of sewage plant effluents and industrial wastes, and for rainfall runoff and stormwater discharges.

These seemingly incompatible uses of the Lake water for water supply, recreation, and wastes disposal are great economic assets; but to retain them it is more important than ever before that careful consideration be given to the location of water supply intakes, to the purification of the raw water, to the treatment of sewage and industrial wastes, to the location

for dispersion of the sewage plant effluents, and to the disposal of stormwater and surface runoff during periods of rainfall. These arrangements are all made more difficult when there is a lake involved, such as Lake Erie, which, although it has a basic slow rate of flow west to east, is greatly affected by winds and seiches because of its geographical shape and location that tends to keep pollution shorebound to a great extent.

These matters and relationships have become increasingly complex as our population has exploded and industrial wastes have swiftly increased in volume and complexity. Hard surfacing of much urban areas has brought about greater pollution as well as flooding problems in basements of homes and buildings. The discharge of effluents from plants that provide complete treatment of wastewater, contain soluble nutrients which may be the basis of a major problem in Lake Erie concerning algal growths and oxygen depletion of bottom waters. And that has already been pointed out by the biologists.

Greater interest in, and more use by the public of the lakefront waters by fishing, swimming and boating enthusiasts, has created pressures for higher standards of water quality. As our standard of living has risen, so have water-based recreational needs

increased in volume and quality.

EFFORTS TOWARD CLEVELAND'S WATER POLLUTION ABATEMENT

The record indicates that the City of Cleveland has been a leader in water pollution control for over 60 years. Its efforts in this direction have been continuous and ever-increasingly toward providing adequate treatment at its three wastewater treatment plants. Its first full size treatment plant went into service in 1922.

It has at times provided treatment beyond that required by the State of Ohio. Cleveland's Easterly Plant, which provides complete treatment for 123 MGD, exceeded the minimum requirements of the State as to the degree of treatment, when this plant was placed in operation in 1938.

The conditions of the last Ohio Water Pollution Control Board permit required no changes or improvements to this plant. However, the City of Cleveland has been studying this plant in the light of its present and future needs, and intends to go ahead with whatever improvement and enlargement program that the City believes is necessary, regardless of whether or not this may be a Water Pollution Control Board permit condition.

Ralph S. Locher

At the present time, Cleveland provides for 227 MGD dry weather flow treatment design capacity at its three plants. Eighty-four per cent of this capacity provides complete treatment using the activated sludge process.

Let me repeat: Eighty-four per cent of this capacity provides complete treatment using the activated sludge process.

Cleveland, however, is not resting on its record. It has carried out, and is continuing a program of improvements, replacements and enlargements to its sewerage facilities in order to attain present water quality objectives.

In order to attain these objectives, Cleveland is cooperating to the fullest extent possible with State and Federal agencies and public groups in providing facilities, data and information, participating in surveys, and having its officials serve on various technical committees.

Cleveland, through its "no sewer no water rule," denies water to areas within its distribution system which do not provide adequate treatment for their wastewaters.

May I add that that policy takes considerable

courage when we are in the business of providing and selling water, and when every gallon of water we sell outside of the City of Cleveland militates to the benefit of the residents of the City of Cleveland, by reason of enhancing and increasing the volume of our water sales.

Cleveland's basic position regarding water pollution control objectives can be summarized as follows:

> The primary objective, to protect the public health, must be attained regardless of cost. Having reached this goal, the other various water quality goals such as protecting this natural resource and providing water of the quality required by the various types of users, must be carried out on a benefit and cost basis and in relation to funds that the public authorizes to be used for this purpose.

The water pollution problem in the Cleveland area chiefly concerns the quality of water in the Cuyahoga River, Cleveland Harbor, and the lakefront, particularly the beaches. The waters immediately along the shore are of the worst quality being greatly affected by overflows from the combined sewer system, and polluted streams,

including the Cuyahoga River which discharges to Lake Erie.

Cleveland knows that a portion of this pollution problem can be properly attributed to areas outside of the City of Cleveland, and to waste discharges not under Cleveland's jurisdiction.

The Cuyahoga River enters the Metropolitan area outside of Cleveland in a poor water quality condition due to upstream discharges of waste. A number of industries use the water from the river for cooling purposes and thereby increase its temperature and reduce its oxygen absorption capacity. A number of industrial waste discharges to the river are authorized by permits from the State of Ohio.

A number of small streams which originate outside of Cleveland are polluted when they enter the City's boundaries.

Another municipality adjacent to Cleveland has been discharging poor quality effluent from its wastewater treatment plant. This situation, however, is now being remedied by new construction.

The dumping of dredgings removed from the navigation channel of the Cuyahoga River and the Cleveland Harbor to nearby disposal sites has been of concern to

us, and this practice has been brought to the attention of the Ohio Department of Health.

Of particular concern to Cleveland, and indeed in many metropolitan areas, is the usage of a combined sewer system. The use of this system is a matter of controversy in practically all large cities in the United States. A Master Plan Study which has been authorized will consider this matter in depth and will give us guidance as to possible modifications.

Cleveland's combined sewer system is large and complicated, and has come to its present state over many years of design and construction. Lack of funds has at times only permitted minimum needs to be built. A system of sewers which 50 years ago was thought sufficient to control water pollution to the extent needed, now requires further study as to Cleveland's needs for the future. Extensive modernization and modification to the degree necessary will be an expensive business. Replacement with separate sanitary and stormwater sewers would entail huge expenditures in the range of $700 million.

The oil and debris problem in the Cuyahoga River and Cleveland Harbor, particularly, is receiving considerable attention since it is visible, ugly, causes

damage, is a source of expense, constitutes a safety hazard, and offends the esthetic senses of many people who relate its presence to other forms of water pollution.

I am happy to be able to inform you that the City of Cleveland is arranging for the routine and systematic removal of debris this summer from Cleveland area waters on a contractual basis. In fact, the bids are being opened this morning for that very project.

CLEVELAND'S PROGRAM FOR WATER POLLUTION ABATEMENT AND CONTROL

Cleveland is now in the process of carrying out a $19 million enlargement, replacement and improvement program for its Southerly and Easterly Plants. A substantial portion of the program is already committed in the form of engineering and construction. It is planned to have all of it under contract by the end of 1966.

Our third and smallest facility, the Westerly Plant, now provides only primary treatment. This plant is being studied carefully as to whether additional treatment is necessary and to what degree.

As of yesterday, a new sewage pump station

and intercepting sewer was put into operation in the low level district at West 3rd Street and Jefferson Avenue, to the Cuyahoga River. This $400 million project serves less than 10 acres.

The completion of this low level sewerage project, along with the Southerly Plant work and with expected improvement in the industrial wastes discharged to the River, should substantially improve this stream in the downtown Cleveland area. There has to be recognition of the major and basic uses of the Cuyahoga River from Akron to Lake Erie in order that the goals for this waterway be realistic.

Cleveland has recently authorized a comprehensive Water Pollution and Sewer Study to be made that will result in a Master Plan for water pollution abatement and control, and I observed with interest that one of the recommendations requires us to do exactly what we have recently undertaken.

There will be a determination of the water quality levels at the various critical locations and a relationship established to the pollution sources. The sewer system will be studied intensively as to requirements for abatement of pollution and elimination of flooded basements. The overall requirements and costs

for facilities are to be related to desired water quality objectives.

The apportionments of costs over the various groups of users is to be determined so that this problem can be handled in a fair manner.

There is also to be reported in the early stages of this study, those projects which can be safely authorized to be started before the entire study is completed.

In that way, we will not be required to wait until the entire study is done before we embark upon a constructive construction program.

It is believed that the resulting Master Plan for Pollution Abatement and Control will put the City of Cleveland in a position so that it can go ahead without undue delay with a program that is well thought out and developed in all of its aspects, including financial arrangements. Such a plan will insure that the money available will be spent for those projects which will most help to abate pollution, and coordinated with public support and understanding will result in protecting this natural resource.

Another important feature of Cleveland's program for Water Pollution Control is the centralization

within one Division of the City Government of the various activities and responsibilities which Director DeMelto referred to in his presentation.

FINANCING OF WATER POLLUTION CONTROL FACILITIES

Cleveland is now in the process of financing a $19 million improvement, betterment and enlargement program for its three sewage treatment plants from sewer rental funds. It has financed other sewerage projects by means of tax funds.

Cleveland to date has not received the benefit of any construction grants under the present Federal Grant System. For that matter, few Federal grants have been given to the larger cities in Ohio because of the large number of applicants in reference to the grant money available. The system used to determine priority for grants favors the smaller communities who may not have done much in the past to abate pollution, and can show a high per capita cost when they do belatedly start such a project. The present grant system actually tends to delay construction work until the yearly grant priorities are established after July 1st of each year.

It is believed that when the comprehensive pollution and sewer study is completed, and the needs

and cost of modifying the sewer system are known, that Cleveland will require substantial financial aid from outside of its own resources.

It is recommended that the State of Ohio give earnest consideration to providing State aid to local communities to help finance programs toward water pollution abatement such as is being carried forward in New York State.

The New York proposal would provide a $1.0 billion state bond issue. The plan proposes that the State and Federal governments would each pay 30 per cent of the costs, with local governments paying the remaining 40 per cent.

However, it is my personal opinion that the water pollution problem requires a crash program approach, and will be solved more speedily and with more certainty if the formula for construction that was used on the interstate highway system, namely 90 per cent Federal, 5 per cent State, and 5 per cent local, were used to finance the necessary sewerage facilities.

Governor Rockefeller's announcement on this matter noted - "It has become clear that despite strict laws, our communities with all their other burdens are not going to meet the pollution problem by themselves."

Ralph S. Locher

This statement of Governor Rockefeller is especially appreciated in Cleveland where the City of Cleveland tax income has been substantially reduced recently, because of a decision of the State Board of Tax Appeals regarding commercial and industrial valuations, and the defeat early this year to provide for a City of Cleveland income tax.

It can be stated that regardless of the merits of water pollution abatement programs, that if the local burden is considered excessive by the public, the program either will not proceed or will be cut down materially before it becomes acceptable, and becomes acceptable to the public pocketbook.

In conclusion, members of the panel and Chairman Stein, we recognize that Cleveland has an important stake in maintaining the water quality resource of Lake Erie at the highest possible level. We do not intend to trifle with this important asset.

The water pollution abatement and control program that is being carried out reflects our thinking as to what we believe should be done presently and in the future.

We sincerely hope that the proceedings of this conference will be of real value and of real help

in defining more quantitatively the pollution problems of Lake Erie and how they can be solved.

You can be assured that Cleveland will do its fair share in any program that recognizes the legitimate uses of the waters for the various sections of Lake Erie and its tributaries, and has as its goal the attainment of water quality levels for each use; if the program is also related to benefits and cost, and in relation to funds available.

Thank you for this opportunity to appear on behalf of the City of Cleveland in this historic conference. Thank you.

MR. STEIN: Thank you, Mayor Locher.

(Applause.)

MR. STEIN: Thank you, Mayor Locher, for a superb and comprehensive statement of Cleveland's position, and I also want to thank Mr. Vincent DeMelto for his statement.

I think, in large measure, the philosophy and attitude you have expressed is among the most progressive I have heard, and certainly in all but minor details, I suspect, coincides with the Federal position.

I also do believe that with an attitude such as we have in Cleveland, as expressed by you, we

will be well on our way towards the solution of the pollution problem.

Where we have had an attitude such as expressed by Mayor Locher in the past, notably in the City of Washington, D. C., and in Chicago, we have made great strides.

I think we have to recognize that this is a combined program, local, State, and Federal, and if we get all parts of our government working together, we can come up with rapid solutions.

I would like to throw this open for comments or questions, but, before I do, I think we have an announcement to make for the record.

The record will have to show that Mr. Hennigan from New York is not present at this session, and there should be a note to this effect at the beginning of today's session.

Are there any comments or questions?

Mr. Morr?

MR. MORR: Mayor Locher, I think that the membership of the Ohio Water Pollution Control Board present here today would appreciate the work that you have obviously done since your last appearance before the Ohio Water Pollution Control Board some six months ago.

You apparently are following the recommenda-

tions of this body, and this State agency recognizes your effort and will commend you for your participating in the discussions here today and revealing to us at this time your compliance with the recommendations of the Ohio Water Pollution Control Board.

I would like to ask you, if you have a moment yet to be with us, if you have sought Federal aid directly, particularly looking towards the large financing plans that must be put together and brought together before the total contribution of the City of Cleveland may be corrected?

MAYOR LOCHER: First of all, thank you for recognizing that we are complying with the Water Pollution Control Board. We aim to be good citizens collectively and individually, and we believe that what you have asked us to do is reasonable, and we are happy to comply.

In answer to the question specifically, yes, we have made application to the Federal Government for aid and assistance in our sewerage treatment construction.

MR. MORR: Under what program, Mayor, and in what amounts?

MAYOR LOCHER: I will have to ask Director DeMelto to answer that.

There are two separate applications under

two programs, and I can't relate the exact title of each program, but they were under two separate programs.

Perhaps Commissioner Gerdel can tell us what those are.

MR. STEIN: Will you give your full name for the record, please?

STATEMENT OF

WALTER E. GERDEL,

COMMISSIONER, DIVISION OF WATER

POLLUTION CONTROL, CLEVELAND, OHIO

MR. GERDEL: I am Walter Gerdel, Commissioner of the Division of Water Pollution Control.

Before July 1st of this year, we submitted two applications to the State of Ohio to participate in the Federal grant aids for construction of sewage treatment plants. One was for $600,000 at the City of Cleveland, and the other was for $1,600,000 as a multi-city grant.

MR. MORR: If indeed, then, the total cost of correction of Cleveland's contribution might reach -- some estimates being as high as nearly a billion dollars, and since, Mayor Locher, you feel that perhaps as much

as 90 per cent Federal aid should be granted towards these projects, what would be your suggestion or your approach to seeking 90 per cent Federal aid, speaking, of course, in terms of a program such as that which you mentioned, as the interstate highway system, or as some other Federal programs might be reasonable as to the particular problem involved.

What would be your approach in this matter?

MAYOR LOCHER: Mr. Chairman, members of the panel:

The only approach would be through a formula being established similar to that with regard to construction of interstate freeways, which would require Congressional action and approval.

MR. MORR: Have you spoken to your Congressional delegates in that regard?

MAYOR LOCHER: Yes, informally I have, but this has been the first opportunity that I have had to throw it out for a general discussion.

I would hope your panel would give this the kind of lift and boost it would require to really get somewhere in the Congress. It would be a great help, and that is why I suggested it here.

MR. MORR: Might I ask further, please, and

Ralph S. Locher

I appreciate your giving us your time this morning so extensively -- you mentioned too that it might be well to use State funds to accomplish the ends in eliminating pollution contribution to Lake Erie and the Great Lakes.

Are you proposing then a state-wide increase in taxes to aid Cleveland in ending its contribution to Lake Erie?

MAYOR LOCHER: No. Mr. Chairman and members of the panel:

I am not asking it to help Cleveland any more than does the State contribution to the interstate system help Cleveland. It helps the entire State.

From the testimony I heard, the Cuyahoga River is not atypical. It is typcial of the streams in Ohio, at least that we know about, that have run off into Lake Erie.

I am saying let's help the State of Ohio, and I think the State of Ohio has a real responsibility in this regard.

To the extent that Cleveland is helped, I don't feel at all guilty, I might add, about receiving any aid at all from the State, particularly when less than 40 per cent of the tax monies that are collected here and are sent to Columbus ever find their way back

to the metropolitan area of Cleveland. So, when I say the State of Ohio ought to put in 5 per cent of this cost, as it does on the freeways, I am not saying help Cleveland. I am saying let's do what Governor Rockefeller said, and let's face up to the matter as a Federal, a State, and a local problem.

A 5 per cent contribution, it seems to me, is a pittance really when we consider that as citizens of Ohio we hold the resources of Ohio in trust for all the people of Ohio.

The Supreme Court has said that the subacreous lands under Lake Erie and the waters are in trust for all the people of Ohio. They aren't in trust for Cleveland or Conneaut or Ashtabula or for Port Clinton, but they are for all the people of Ohio.

I don't believe we can realistically spend the hundreds of millions and billions, to summarize, except that it be a coordinated effort, and except that it be attacked, as we have attacked other large problems.

For example, education -- we gave thousands and thousands of acres of land to the land grant schools, and this goes back to 1802. That is the way we started those great universities.

Now we have another problem that is facing

us all. I would suggest that the State, as well as the local communities, but, to the largest degree, the Federal Government, recognize that it is a joint effort.

I realize that to do so will take money and will take taxes. We will not be able to do it without taxes, but sometimes, ladies and gentlemen, we've got to look ourselves in the mirror and say if it takes money and takes taxes, despite elections and everything else, it is the only way to solve this problem, and my suggestion is, yes, that the State of Ohio, either from present revenues or by increased taxation, contribute 5 per cent to this cost.

And I say very candidly to the citizens of Cleveland, they should be willing to pay 5 per cent of the cost.

The 90 per cent -- and it is generous to be able to say to the Federal Government, "You take up nine-tenths of it" -- I feel is likewise, to a degree, money that has come from the great industries and the individuals, and the rank and file citizenry of Cleveland, Ohio.

This meeting would not have been held, I don't believe, as well as it has, had it not been brought together by the Federal Government, which is able to

coordinate the efforts of all of us.

For Cleveland to attempt to do it would be the tail wagging the dog, but here is the Federal Government recognizing it as a Federal problem, and I would like the State to recognize it as a 5 per cent State problem, and I certainly would be willing to recognize it as 5 per cent municipal.

(Applause.)

MR. MORR: How do you propose to the people of Cleveland the obtaining of the 5 percent?

MAYOR LOCHER: Mr. Chairman, we are putting on the ballot this fall an item for $6 million for sewers.

Also, as was pointed out, we have a $19 million program with regard to our sewage treatment plants.

Our plants I don't believe can honestly be said to be operating in an inefficient form, but our collection of the sewerage wastes and the wastes from industry leave a lot to be desired.

I would suggest, therefore, that it be done in two ways: That this study, which is now being made, and which the State rightfully asked us to undertake, be used as a basis for computing the sewage treatment rates for the suburbs and for Cleveland, just as soon

as its preliminary report has been made, because beginning next July, our present rate will have been exhausted or the term will be over, and before that time we should have negotiated a new rate with the suburbs, and with ourselves, for that matter. That would be one way to take care of that problem.

I would suggest also that a bond issue, in addition to the $6 million, if that is found to be necessary, might be a way of financing it; and I would suggest, if I may presume, that the State likewise undertake it on a bond issue matter.

We have been immensely successful with other bond issues, and I believe the interest and concern is here now at this time that would catapult it over the 50 per cent or 55 per cent that is required.

MR. MORR: Thank you.

Could I ask Mr. DeMelto one question, please?

MR. STEIN: Go ahead and ask your question.

MR. MORR: Thank you.

Mr. DeMelto, again, my commendation to you. We feel that you are embarking on a program in your recognition and Mayor Locher's recognition of the attempt to meet the problem of Ohio's contribution to the interstate pollution of our Great Lakes that must be met, and

met now. We commend you too for your work.

It appears that one of the aids to be provided by our Federal agency and interest is well on the way to success, and I would like your opinion, if you would give it to us at this point, in line with this aid problem.

According to the Duluth Herald, an official of the Division of Water Supply and Pollution Control in the United States Public Health Service said, and I am quoting this article:

> "We intend to help you find answers to scientific questions about the lakes, and the new Duluth Water Laboratory will be one of the main sources of information."

This gentleman was appearing before the Pollution Control Committee of the Great Lakes Commission, and he further related, according to the Duluth Herald, that:

> "A staff of 130 people, mostly scientists, engineers and technicians, is being assembled for the new laboratory at Duluth. Their assignment is to determine the standards of water quality necessary to protect aquatic life, wildlife, industrial and agricultural water uses, recreation and municipal water

supplies.

"Standards developed at the laboratory will help water pollution control officials establish rules concerning the treatment of wastes and their discharge into waterways."

Again I quote, according to this article, Mr. McCallum:

"Today we simply do not have reliable criteria defining the quality characteristics affecting specified water uses. Such criteria must be based on the relationship between concentrations of various substances and their beneficial or harmful effects."

This conference thus far has rather decidedly ascertained that we have pollution which is detrimental, and while there might not be any criteria or any standards at the present time, at least exposed to this conference, the main job to be done is the construction of facilities that will adequately dispose of or treat waste, that pollution may not occur or recur.

Do you feel that the contribution of the Duluth Laboratory will evolve into a changing of criteria, if indeed we would have any today, at least informally, so that what we have presently might be inadequate ten

years hence or twenty-five years hence, in the art -- if we might speak of the art -- of the sewage disposal of industrial wastes?

MR. DeMELTO: I couldn't follow you all the way through.

Will you specifically ask the question, sir?

MR. MORR: Certainly.

The establishment of criteria, it appears, needs yet to be agreed upon, and the Duluth Laboratory of the Public Health Service will attempt to establish criteria.

My question to you is this: As an expert and one directly in interest and attempting to do the job, do you feel that criteria might be evolved from such laboratory work that would make obsolete or ineffective such projects as you are presently proposing for construction at Cleveland?

MR. DeMELTO: No, I don't think so. It may mean improving and putting in more improvements and refinements to take care of what this conference, or what may come up ten years from now.

I don't believe we could wait. We have been criticized for not going ahead and doing things, and so we are doing it according to present day standards.

Undoubtedly, if changes are necessary, we will have to make those changes, but I don't think they will render our entire plants obsolete, because, if it did, you would be rendering obsolete all the plants on Lake Erie.

MR. MORR: Certainly, and under what standards then are we constructing today?

MR. DeMELTO: Well, today we are enlarging and increasing our facilities and putting in improvements, various improvements, to take care of raising the amount of solids that are taken out of the sewers.

MR. MORR: And whose standards are these, if I might ask?

MR. DeMELTO: Pardon?

MR. MORR: Who established such standards as you are addressing your construction to?

MR. DeMELTO: Well, we have our consulting engineers, and, of course, we obtained all the available data we could get.

The State, of course, gives us guidance on it. All of our plans are sent to the State for approval. Every plan, before any construction is started, must be approved by the State, and so, of course, we rely rather heavily on the State.

Vincent M. DeMelto

MR. MORR: Is secondary treatment considered in your present plans, and, if so, to what extent?

MR. DeMELTO: Yes, of course. We now have secondary treatment at both the Easterly and Southerly Plants.

Now, at the Westerly Plant, with the approval of the State, I am sure we are using chemicals to see whether those chemicals will do the job on an experimental basis. We have been doing that all this year, and when the results of that are obtained, why, then we will have to determine whether that is adequate, or whether we will have to go to secondary treatment.

Another reason is that the Westerly is the smallest of our plants, and, therefore, there may be improvements necessary in the whole system that may be more important than establishing secondary at Westerly.

However, if our engineering report shows that Westerly must, of necessity, go to secondary treatment, then, of course, that will be taken care of.

MR. MORR: Have you applied to any Public Health Service office for Federal standards of criteria regarding pollution or contributions to pollution?

MR. DeMELTO: I don't understand that question, sir.

Vincent M. DeMelto

MR. MORR: Do you have any knowledge of Federal agencies' standards or criteria relating to pollution?

MR. DeMELTO: Well, we get all of the publications, and Commissioner Gerdell goes over them with me, and we do study them. We keep up to date on all of them.

MR. MORR: There are Federal standards then, and criteria?

MR. DeMELTO: Yes.

MR. MORR: Thank you.

MR. STEIN: Thank you. Are there any further questions or comments?

You know, I might say with regard to the speech in the newspaper that you quoted, Mr. McCallum, of course, is my immediate boss, and I have worked very closely with him for 15 years, as has Mr. Poole and Mr. Oeming, and I think we know what he means.

He doesn't mean that every state program, Ohio, Pennsylvania, Indiana, and Michigan, should stop until all standards are perfected.

We realize and recognize that what we are dealing with here is that we are dealing with an imperfect science. We do have criteria, good engineering judgment, and goals and standards to shoot at in various

aspects. We know we can make immeasurable gains if plants are designed to meet those, and we have them -- primary, secondary, or sometimes tertiary treatment.

I think what Mr. McCallum was speaking about was that we are trying to get specifics in criteria dealing with particulars on certain fish, as, for example, the Mayor spoke about the blue pike, what might be harmful to them or a critical point for those fish.

You hear about the algae -- what might be harmful to algae or other water uses. We need other standards and other criteria, and have to know a lot more.

When we deal with these with particularity, I don't suspect that there is, from a logical point of view, only one way you can go -- that is, you have to put in more treatment. Perhaps, with the defect of knowledge, we overbuild in some cases to provide protection, and we may be able to do a little less.

So I look for the standards to refine the art, but I think, and I am sure -- as I say, I live every day with Mr. McCallum -- he would agree that programs should not be held up for the perfection of these standards and criteria.

MR. MORR: I think now that we have defined the purpose of the Governor calling this meeting together,

and you have done so rather nicely, that the public would be informed, and that the various agencies of government, local, State and Federal, meet this problem head-on, collectively and in a unified approach.

I think this conference is bringing out this point quite well, and I would thank you, Chairman Stein.

I think we, at this point, have really defined the purpose of this meeting, and I want to commend the Federal agency for bringing to a point this need for unification in the approach, and for definitions and the total contribution each has to share, at every level of government, and the individual citizens, and not only share, but purposefully treating of a recognized blight upon civilization, and this is true on the part of each of us as citizens, beside our positions as public officials.

I think that this is the purpose of the Governor's calling this meeting, that there be a public awareness, and that the public agencies meet around the table and decide to embark upon a unified approach to this problem.

Thank you.

MR. STEIN: Yes.

Now, while I am talking, I think you and

Mayor Locher both raised one more point, and that was on that 90/10 financing.

I was on a program last night with Congressman Charles Vanik, and he had precisely the same proposal, Mayor, so evidently there is some support in your Congressional delegation.

I would like to point out several things here.

Many states, other than New York, do have some kind of financial aid for cities, and I am just stating that as a fact. Some of them match the Federal grant, some of them give partial matching, but at least a half dozen states at the present time provide financial aid for the cities.

However, again, in thinking through this problem, and I am speaking here from a Washington point of view, because I would like to see sewage treatment proceed as rapidly as possible, and no one is more aware of the problems of the city than I am, when you are speaking in terms of 90/10 Federal financing, there is a question of how the money is to be raised on the Federal level.

I think the problems here have been the astronomical funds you get at if you begin adding up

the needs of all the cities on a nationwide basis.

This is what happens in the highway program, or this is what happens in any massive program we go into, such as social security or Medicare, or what have you. The financing becomes a real, real difficult problem.

I think again in most of these cases you will find that some special form of tax, or earmarking of tax, has been made for the financing. Certainly, that is so in social security, Medicare, or the roads program.

In other words, I am not taking a position on the legislation or on the proposal, but I think the first question to be asked in Washington is, "How is this money going to be presented?"

I think the question boils right down to this: Is it going to come out of general funds, or are you going to have to get some kind of device where the Federal Government is going to have to go out and tax and earmark funds for this purpose?

I think this is a very real question, and I don't know that your proposal will move forward or get much serious consideration until answers come forward in that area.

Are there any further comments or questions?

Ralph S. Locher

MR. POSTON: I have a couple of questions.

I too appreciated Mayor Locher's understanding of his problems here in Detroit -- in Cleveland -- we are in Cleveland now.

MR. STEIN: Wally, we surrounded him both ways. I started off by mispronouncing his name, and you put him in Detroit.

(Laughter.)

MR. POSTON: Well, I wanted to ask Mayor Locher one question, and ask whether he cared to comment on his sewerage service charge, as compared to his lower water rates than anyplace else in the country. Mayor Locher indicated that he had the lowest water rates.

Do you care to comment on how low your sewerage service charges are here?

MAYOR LOCHER: Mr. Chairman and members of the panel:

Our rates for water are consistent with what it costs us to provide water, and they are extremely low by reason of the fact that Cleveland, early in the century, provided these fine modern plants, far in excess of what was necessary or what was then needed, at relatively low costs.

Similarly, our municipal light plants provide

electricity at considerably less cost than does the private company, because we put in the facilities years ago, when Johnson had his great fights at the turn of the century, and we went into that area of work.

With sewerage rates, likewise, by reason of the fact that we began at the turn of the century, rather than being "Johnny come lately," so to speak, much of our plant was constructed and paid for and put in when costs were relatively low. As a result, our sewage rates are low.

I think too that is a commentary on the efficiency of the department and the commissioner and his aides. Our rates are low and they reflect early investment at low cost, and continued effort and efficient maintenance and operation.

MR. POSTON: Thank you, Mayor Locher.

I would also like to ask Mr. DeMelto a question concerning whether or not the city has a permit to discharge wastes to the Lake and to the Cuyahoga River, and, if they have a permit, for what period is this?

MR. DeMELTO: We have a permit from the State, of course, and that permit comes up for renewal this March, and the conditions substantially required by the State will be met as of the calendar year, which

means that they are not met at this very moment, but by the end of the calendar year, we hope to comply with all that the State has asked.

The State has never questioned our sewage disposal plants and the improvement there. In fact, they have commended us, that we are doing a good job on our sewage disposal plants.

Most of their criticism has been centered around sewers and overflows, especially in the low level area.

We have awarded a couple of contracts this year, and before the end of the year we hope to have everything awarded, so that we will be in compliance with the State's regulations, and will be able to obtain a renewal of that permit.

MR. POSTON: Will your improvements include secondary treatment at your Westerly Plant?

MR. DeMELTO: No, sir, not for this year, because of the fact that with the approval of the State, we are using the Palmer treatment, this new chemical treatment, which we are experimenting with, to see whether it will be necessary to go to secondary treatment.

MR. POSTON: In other words, you feel that perhaps your Palmer treatment may equal the effluent

that you get out of activated sludge plants, the type of plant that you have at the Southerly Plant?

MR. DeMELTO: It may not 100 percent, but, you remember, that is only the smallest of our plants, and the amount of flow into that plant is being reduced.

For example, at the present time, we have entered into a contract with the City of Lakewood, whereby we have taken 25 per cent of this new plant, and much of our sewage is being diverted from the Westerly to the Lakewood Plant, and with these changing conditions, we are, as I said, experimenting with the chemicals and the reduced flows to see if it will warrant going into secondary treatment in Westerly.

MR. POSTON: One other question: Does the city have an industrial waste ordinance limiting the kinds of industrial wastes that may be emptied into city sewers?

MR. DeMELTO: Well, the State has preempted the field as far as the industries are concerned. They operate under permits from the State. We do not have a local ordinance governing that.

MR. STEIN: Let me try this. Let's explore this, Mr. DeMelto.

I don't think, in this case you are talking

about, industries have a direct discharge necessarily into the stream, but you do have industries discharging into your municipal sewer system. You have control over those, and I don't think that, as far as I know, any State has preempted anything there.

MR. DeMELTO: No.

MR. STEIN: But when they go into your system, you are legally and technically responsible for the wastes.

Now, I think Mr. Poston's question may have been directed at that.

Do you have an industrial waste ordinance governing the volume and strength of the wastes that industries can put into your municipal system?

MR. DeMELTO: Yes, sir. We have created an industrial department -- I might say parenthetically, a few years ago we had a very serious explosion in one of our sewers out on the west side, and at that time we passed an ordinance and set up a crew of men who do nothing but go around examining that sewage.

On several occasions, we have found explosive and different materials which industry should not have put into the sewers, and we have checked up and stopped the practice.

Vincent M. DeMelto

MR. POSTON: One step further, then:

Does the city have an ordinance pertaining to debris in streams? I noted that Mayor Locher indicated that he either today or recently has instigated a program for removal of debris from along the streams.

Do you have any type of ordinance that would prohibit dumping along the banks of the streams so that the material would not gain access?

MR. DeMELTO: Not specifically, but we do have a general nuisance ordinance, and under that ordinance we have the authority to stop a nuisance, and certainly it is a nuisance if industry throws all its stuff in the Cuyahoga River.

Looking towards enforcement of that, we have let bids, which are coming in today, as the Mayor stated, to rent a boat for experimental purposes this year, because the summer is fast going and we didn't have time to purchase a new boat, but we will rent this boat out and use it for that purpose, to clean up the Cuyahoga River for the rest of the season.

After we look at our experience there, we will undoubtedly purchase a boat and operate it and man it ourselves.

I understand also that industry is willing

to cooperate on that.

MR. POSTON: Will this apply also to the shoreline of Lake Erie within the city limits?

MR. DeMELTO: Yes, but primarily the Cuyahoga River. Also, I might add that industry is cooperating by setting up a system whereby the oil can be reclaimed and picked up by the boat.

MR. POSTON: I have one final question pertaining to sludge. As I understand it, that sludge is treated at the Southerly Plant. Do you have adequate facilities at the Southerly Plant so that you can handle the total amount of sludge without having to dump any into the river?

MR. DeMELTO: Yes. What we do with the sludge, we put it in cases or cartons and carry off most of it. It is considered a good soil conditioner.

Southerly, of course, handles the sludge also from Easterly through a 13-mile pipeline, and at the present time we are under a construction program to enlarge the sludge handling facilities of the Southerly sewers.

MR. POSTON: That is all I have.

MR. STEIN: I must say this. As you know, I have been at the Easterly Plant several times, and

in my opinion that is one of the best run sewage treatment plants in the country.

Of course, when I asked what happened to the sludge, they said you piped it to another plant, so I never saw what you did with that.

I have a brief question or two.

On your "No sewer no water rule," do you require separation of sewers before you give them water?

MR. DeMELTO: Let me say that in -- this occurs mostly in the suburbs of Cleveland.

MR. STEIN: How about the suburbs? Are they putting in combined sewers?

MR. DeMELTO: As to the suburbs, I would say that 80 per cent of the suburbs' sewers are now separate sewers.

MR. STEIN: How about the new ones?

MR. DeMELTO: The new ones, they are all putting in separate sewers.

MR. STEIN: In other words, you don't give them water unless they put in separate sewers. Suppose they come to you with a plan for combined sewers?

MR. DeMELTO: They never have come into that, because the State Board of Health also has a lot to do with that.

MR. STEIN: How about your urban renewal ground, where you clear some ground? Do you separate the sewers there as well, or do you just leave them combined?

MR. DeMELTO: In our Erieview Project, we had them build separate sewers, but we still have to provide separate sewer lines to take care of it. At the moment, they are going into combined sewers.

MR. STEIN: I recognize that, but if we are ever going to get at the problem -- is it your position when you have a clearance for urban renewal to separate the sewers in that area?

MR. DeMELTO: That is what we expect to do on all of our renewal projects in the future.

MR. STEIN: Thank you.

Mr. Oeming?

MR. OEMING: Mr. Chairman, I think my questions will be directed primarily to Mr. DeMelto.

Pursuing this question that Mr. Stein raised with respect to the separation of sewers in the outlying area, what provisions do you make in your contracts with these people to see that separation continues -- that is, policing the system once it is built?

MR. DeMELTO: Our contracts do not call for

separate sewers, but they call for a plan approved by the State Board of Health, and before we will extend our water lines into an unsewered area, those plans -- in other words, here is a community called "X." They want water and they have no sewers.

We tell them that before they can get water, the first necessity or prerequisite is that they must have a plan approved by the State Board of Health, and we have stuck to that.

MR. OEMING: I understand about the plans, Mr. DeMelto. My concern is, once the plan is executed and a separate system is in, do you have any tie-up or any authority regulation that covers the use of this system, to see that the separation continues to be maintained year after year?

MR. DeMELTO: No.

MR. OEMING: I mean, this is the real problem. You can provide a separation of sewers, but to maintain them is another problem, as separate sewers, and I was wondering if Cleveland had any provisions in their approval or to take the sewers that maintain the separation?

MR. DeMELTO: As I say, our contracts merely say that before you can have water, you must have a plan

approved by the State. Now, it doesn't go any further than that.

No, it does not provide for maintenance.

MR. OEMING: I see.

MR. DeMELTO: But I think that is a good point.

MR. OEMING: You have some separate sewers in Cleveland, didn't I understand?

MR. DeMELTO: About 20 per cent of our sewers are separate.

MR. OEMING: Yes. Well, how do you people in Cleveland ride herd on this system now to make sure that sewage doesn't get in the separated storm system?

MR. DeMELTO: Well, we inspect our overflows about 1,000 times a month. We have about 1,000 inspections a month, and we are constantly increasing the number of inspections.

In fact, I was notified this week by Commissioner Gerdell that we are putting on another crew for that purpose, to have a constant surveillance over the overflows.

MR. OEMING: My next series of questions, Mr. DeMelto, are directed at the point of filling some of the gaps that I feel have come up in this conference

with respect to the contributions of phosphates to the Lake, the total Lake problem.

I have looked in your report here, and I find information with respect to solids and BOD, and I wonder, do you run tests at any of the plants on the phosphate contribution?

MR. DeMELTO: Yes, we run tests, but it seems as though the latest -- in order to eliminate the phosphates, you've got to give more aeration, and instead of that, your latest technique is to cut down the amount of time of aeration, which, if we are going to take out the phosphates, and I don't think any of the plants on Lake Erie at the present time take out the phosphates, but if that is going to be one of the rules of the road, then we will have to provide for more aeration, or whatever is necessary to take out those phosphates.

MR. OEMING: Specifically, do you have information available that would tell us what your total phosphate loading is presently from your plants?

MR. DeMELTO: I would have to refer that to the Commissioner.

MR. OEMING: I don't want the information; I just want to know if you have it.

MR. GERDEL: We don't run phosphates as

as ordinary routine determination. We have taken samples for the United States Public Health Service. They have analyzed these samples. They have tried to evaluate in a plant such as our Easterly Plant, operating as it is now, what the removal is.

I don't know what the results have been.

MR. OEMING: I see.

With respect to the Westerly Plant, Mr. DeMelto, do I understand that you are conducting full-scale plant tests with these materials, on chemical precipitation?

MR. DeMELTO: Yes, sir.

MR. OEMING: In connection with those experiments, are you going to determine what the phosphate removal has been with the existing plant, and what it would be with these materials added now to increase the solids removal?

MR. DeMELTO: We hope, as a result of these experiments, we may make that determination.

MR. OEMING: Is this a part of the test, a part of the experimentation to determine?

MR. DeMELTO: No. Up to now we have not done anything with the phosphates.

MR. OEMING: You have sat through all of

this conference, and you know of the concern of the States with respect to the interstate problem in the Lake, which has been identified as a nutrient problem.

Don't you feel that it is important that you get this information, not only with respect to what you are experimenting with, but with respect to your present loads from your existing secondary treatment plant?

MR. DeMELTO: Yes, sir. That has been made very clear at this conference.

(Laughter.)

MR. OEMING: You intend to do this, I take it?

MR. DeMELTO: Yes, sir.

MR. OEMING: All right. Thank you, Mr. DeMelto.

MR. STEIN: Thank you very much.

Are there any further questions or comments?

(No response.)

MR. STEIN: If not, we would like to again thank you, Mayor Locher and Mr. DeMelto, for an excellent presentation.

As I say, at least in my experience around, I think your city is coming forward with a full explanation of what you are doing, what your plans are, what

your policy is, and what your attitude is, and I am sure when that is done, we and, I am certain, the State governments will be more than happy to meet you halfway, and arrive at an accommodation, and I am certain we will get an equitable program to improve the situation.

You can be assured of our cooperation and assistance in anything you wish to do to improve your waste treatment or collection, and we work, of course, through the State agency, as you know.

MR. DeMELTO: Thank you.

MR. STEIN: Thank you very much.

MAYOR LOCHER: Thank you.

MR. STEIN: May we recess for ten minutes? We will reconvene promptly in ten minutes.

(After recess.)

MR. STEIN: May we reconvene?

Dr. Arnold, please.

DR. ARNOLD: Yes, sir, Mr. Stein.

We would like to continue with the presentations from the municipalities, and call on the City of Cuyahoga Falls at this time. Is the Mayor here?

(No response.)

DR. ARNOLD: Mr. Chairman, he doesn't seem to be here, so we will proceed now with the presentations of the industries, and call on the Du Pont Company, Mr. Charles W. Lounsbury.

MR. STEIN: I wonder if we could try to arrange it so that we can recess for lunch at about 12:30.

Is that possible, sir? How long will your presentation take?

MR. LOUNSBURY: My presentation is very brief.

MR. STEIN: Go right ahead.

Charles W. Lounsbury

STATEMENT OF

CHARLES W. LOUNSBURY

PLANT MANAGER

CLEVELAND, OHIO PLANT

E. I. DU PONT DE NEMOURS & COMPANY, INC.

MR. LOUNSBURY: Mr. Chairman and Conferees:

My name is Charles W. Lounsbury. I have been Manager of the Du Pont Company Plant in Cleveland, Ohio for almost five years and have spent a total of ten years at this location. The plant is located at 2981 Independence Road, on the Cuyahoga River, at a point approximately 4-1/2 miles from its mouth.

Manufacture of industrial chemicals began at this site in 1867. Operation has been continuous during the intervening 98 years. Current employment approaches 300 people. The principal products are inorganic chemicals: sulfuric acid, hydrochloric acid, sulfates and bisulfates, silicates, and zinc and ammonium chlorides. Minor quantities of several chemical specialties, both organic and inorganic, are also manufactured. None of our products are sold directly to the ultimate consumer, but are sold to other manufacturers for use in

making their products.

Before a municipal interceptor sewer was installed along Independence Road, sanitary sewage was discharged to the river in a combined sewer. A separate sanitary sewer system was installed in the plant and was immediately connected when the municipal interceptor was completed in 1962. All other water, consisting primarily of river water used for cooling purposes, is returned to the Cuyahoga River in a separate sewer system.

Pollution control is recognized as an essential part of every operation by the Du Pont Company. No new installation is approved unless it meets or exceeds the requirements of the appropriate authorities. All installations are regularly reviewed to insure that available and applicable technology is adopted as early as possible when it will further reduce losses to the sewer. Since the Ohio Water Pollution Control Act was adopted in 1951, our programs for loss reduction have been regularly reviewed and approved by the Ohio Water Pollution Control Board. During this period, new facilities and improved operating practices have accomplished significant reductions of our wastes. For example, we have eliminated all acid process waste by installing a neutralization tower. Process changes have reduced oxygen-demanding

waste by 95% and nitrogen sources by 90%. Releases of zinc compounds have been reduced by 50% and efforts to make further reductions are continuing. Zinc is the only constituent of our waste which the State has classified as needing improvement. Zinc in small quantities does not harm humans, but the State of Ohio has asked that the level of zinc in the receiving stream not exceed 1 ppm to protect aquatic life. At our present rate of discharge, the maximum concentration of zinc in the Cuyahoga River will not exceed 1 ppm except at the time of lowest river flows. With our continued program of reduction we expect to bring the stream concentration below that figure at all times.

In summary, we have recognized our responsibility to control and reduce waste discharges as rapidly as available technology and good operating practices will permit, consistent with sound economic judgment. Our regular monitoring and control procedures give us assurance that our wastes are not contributing to the degradation of Lake Erie, or limiting any of the uses of the lake described in the Public Health Service Report. Furthermore, we are very close to complete compliance with the State requirements regarding the Cuyahoga River itself.

Charles W. Lounsbury

Thank you.

(Applause.)

MR. STEIN: Thank you very much, Mr. Lounsbury, for a complete statement, as Du Pont always gives.

Are there any comments or questions?

Mr. Poston?

MR. POSTON: Mr. Lounsbury, I have one question.

I would like to know whether the Du Pont plant here monitors their effluents to know the quality of the wastes being discharged to the Cuyahoga River?

MR. LOUNSBURY: Yes, sir, we do.

MR. POSTON: Would you object to giving this information to the Public Health Service, the Federal Government?

MR. LOUNSBURY: No, we do not. We are willing to share our data with any group that is interested on working on the local pollution problem.

MR. POSTON: Thank you.

MR. STEIN: Are there any further comments or questions?

(No response.)

MR. STEIN: If not, thank you very much, Mr. Lounsbury. The policy that you just enunciated

is the policy we have experienced throughout the country with Du Pont, sir.

MR. LOUNSBURY: Yes, it is.

MR. STEIN: Thank you.

Dr. Arnold?

DR. ARNOLD: We will next hear from the Harshaw Chemical Company, Mr. Paul R. Pine.

Mr. Pine.

Paul R. Pine

STATEMENT OF

PAUL R. PINE, VICE PRESIDENT,

THE HARSHAW CHEMICAL COMPANY

AND

CHAIRMAN, CLEVELAND CHAMBER OF

COMMERCE INDUSTRIAL WASTE COM-

MITTEE

MR. PINE: Mr. Chairman, Conferees, Ladies and Gentlemen:

I am Paul R. Pine, a Vice President of The Harshaw Chemical Company. I have also been Chairman of the Cleveland Chamber of Commerce Industrial Waste Committee for many years. I appear before this conference in a dual capacity. My statement will be in two parts, one pertaining to The Harshaw Chemical Company and one pertaining to the Industrial Waste Committee activities.

This is part one.

The Harshaw Chemical Company is a Cleveland based company with a major manufacturing installation on the banks of the Cuyahoga River. The management of my company has always had a positive philosophy with

regard to pollution problems, whether they be water pollution or air pollution. They have stood and do stand ready to assist any authorized agency or regulatory body working in the field of pollution control.

In 1954 we voluntarily submitted to the permit system set up by the State Water Pollution Control Act and have possessed a permit in good standing since that date.

Prior to 1958 no trunk sewers were available to our plant so that our industrial waste and our sanitary waste were mixed and were dumped into the Cuyahoga River. In 1958 a low level interceptor sewer was installed by the City of Cleveland. We immediately segregated our sanitary waste and tied into this system, so that today no sanitary waste reaches the Cuyahoga River from our plant.

We are one of the world's largest producers of refined metallic salts for the electroplating of metals and other uses. The principal metals handled are nickel and cobalt, with minor amounts of copper, manganese, cadmium and zinc. We are also large manufacturers of anhydrous hydrofluoric acid, and related fluorides.

These activities give rise to two major

problems as far as industrial wastes are concerned -- one, heavy metals; two, calcium sulfate.

Heavy Metals

Since issuance of our permit for the dumping of industrial wastes into the Cuyahoga River, we have installed complete monitoring equipment to measure flow and to sample this flow continuously twenty-four hours per day, seven days per week. We have also installed sampling stations at the boundary of each operating department to evaluate that department's contribution to the effluent.

Using data thus collected, we have rebuilt our sumps, installed acid-proof floors, modernized our process equipment, installed scrubbers, etc., and generally increased the efficiency of these departments. By these means we have brought about a substantial, and that is a 20-fold reduction in the heavy metal content of our effluent. Admittedly, there is more to be done.

Calcium Sulfate

Our calcium sulfate discharge again, admittedly, is unsightly. A milky white discoloration fans out from the point of discharge and is visible from

almost any point of vantage. Calcium sulfate is the natural component of almost any river, and we have not regarded it as a pollutant per se, since any natural gypsum deposit which a river flows through contributes the same material to the water. It, being the discharge, is completely dissolved within 500 feet of point of discharge.

We regularly monitor the river above and below our plant, and find that as the river enters our plant area it carries a calcium burden of 73 ppm.

Now, there is an error in the text that I released. The word "sulfate" should be stricken. I'm sorry, it was an error in transmission, and I apologize.

As the river leaves the plant area it carries a calcium burden of 79 ppm. Associated with the calcium sulfate are traces only of fluorides and other sulfates. These figures are valid under average flow conditions and would be somewhat higher at low flow rates and somewhat lower at high flow rates.

Waste acids from our fluoride operations are collected in tanks and sold to acid consuming industries throughout the City.

Paul R. Pine

We are well aware that we still have work to do, but we feel that under the very capable guidance of the State Engineers of the Water Pollution Control Board, we have made significant progress. We expect to complete our work within two years, barring emergencies, and to have our plant classified in the adequate treatment category.

That is all for Part I.

MR. STEIN: Do you want to entertain questions now?

MR. PINE: Whatever you wish.

MR. STEIN: I think it might be advisable. The record would be cleaner.

Are there any questions on the first part of Mr. Pine's statement?

Mr. Poston?

MR. POSTON: I would like to ask Mr. Pine whether the Harshaw Chemical Company would object to providing records of their waste effluents to the Public Health Service?

MR. PINE: No, we would not.

MR. POSTON: You would not?

MR. PINE: I would hope that any request for the data, the bearer would also accompany in his

other hand an invitation to participate in the interpretation of that data, for this reason: That our operations do vary from day to day and week to week, and you might take a set of data on one day that would make us look lily-white, and we know we are not lily-white, and then on another date, however it might make us look very bad, and we know we are not that bad, so we would like to assist in the interpretation of the data.

MR. POSTON: I think this is a legitimate request.

MR. STEIN: Thank you. Are there any further comments or questions on the first part?

(No response.)

MR. STEIN: If not, Mr. Pine, will you continue, sir?

MR. PINE: I'll put on my other hat.

(Laughter.)

This statement pertains to the activities of the Cleveland Chamber of Commerce Industrial Waste Committee.

The Industrial Waste Committee of the Cleveland Chamber of Commerce was organized in 1953. It is composed of representatives of major industries in the City, especially those holding permits from the

State of Ohio for the discharge of industrial waste into the Cuyahoga River and Lake Erie. It was organized for the express purpose of rendering assistance to the City of Cleveland, Cuyahoga County and the State of Ohio whenever requested. It serves as a clearing house of information on pollution problems and legislative programs pertaining to pollution problems. It collects and disseminates technical information, and it has at various times been the agency through which financial assistance was extended on special projects not contemplated in the Municipal budget.

In addition to the other more subtle pollution problems, it recognizes three major problems which are of prime importance to the community and to the State. Oil films and debris are readily visible in the waters of the Cuyahoga River and Lake Erie. The third problem is with polluted beaches.

Debris is a water course problem and, however deplorable, does not have its origin in industrial operations. The removal of debris, therefore, is not an industry problem but is a problem for the City, the State or the Federal Government.

Oil slicks originate from many sources, some of them industrial. Oil finds its way into sewers

from filling stations and garages, from machining or other metal working operations, and from surface runoff.

In Industry's opinion, oil slicks and debris are two separate problems, not necessarily related; and until the debris problem is solved, the skimming of oil slicks as they appear is almost impossible.

My Committee has approached the oil problem from two standpoints. We have appealed to all wholesale merchandisers and transporters of oil products to caution their retail ourlets against any misuse or careless use of oil in a manner that would permit it to seep into the sewers. We have not been able to evaluate the success of this program.

When the City of Cleveland demonstrated through Councilmanic action that they were willing to seek a temporary solution of the debris problem by contracting the collection until such time as a permanent solution can be worked out, the industries of the City collectively offered to procure at its expense suitable oil skimming equipment which can be operated either as a part of the debris collection or independently of debris collection. Steps are already under way to make good on this commitment.

Debris and oil, however disagreeable,

rarely cause a beach to be closed. The cause of the closing is high bacterial count. This is traceable entirely to sanitary sewage which has been partially treated or not treated at all and contributed by individuals, villages and cities all up and down the stream. This is something industry can do nothing about except pay taxes. It has been quick to separate sanitary waste from industrial waste and discharge the sanitary waste to sewers as rapidly as sewers have been made available.

Each industry represented on the Industrial Waste Committee has its own problems. They must solve their own problems. The most that the Committee can do is to lend assistance, moral support and a sense of urgency. We can assist industry and the community in disseminating factual information so necessary to the correction of our problems. We are very strongly of the opinion that the pollution problem will not be solved until each and every citizen recognizes his individual as well as his collective responsibility and dedicates himself to correcting his own faulty habits.

Thank you.

(Applause.)

MR. STEIN: Thank you, Mr. Pine.

Are there any questions or comments?

(No response.)

MR. STEIN: If not, thank you very much.

You know, we took that boat trip, and I had the opportunity of seeing the problem you face in the Cuyahoga River and what you are going to clean up. I suspect you will get some oil and debris there.

Dr. Arnold?

DR. ARNOLD: We will now hear from the Republic Steel Corporation.

The presentation is to be made by Mr. H. L. Allen.

STATEMENT OF

H. L. ALLEN,

VICE PRESIDENT,

OPERATING STAFF SERVICES

AND

CUSTOMER RELATIONS

REPUBLIC STEEL CORPORATION

MR. ALLEN: Mr. Chairman, Conferees, Ladies and Gentlemen concerned with the problems of the control of water:

I am Harry L. Allen, Vice President of Republic Steel Corporation. We operate two plants on property adjacent to the Cuyahoga River, and, incidentally, also operate a plant on the Buffalo River, which we will not get into today, inasmuch as you are moving this conference to New York State next week.

The first is our Cleveland District steel plant and strip mill which extends upstream from near old Jefferson Street to Harvard Avenue. The other is our Bolt and Nut Division which is located on the west side of the river just south of the Detroit-Superior viaduct.

In addition to the responsibilities for

my employer, I suppose I might digress from the script for a minute and say I have somewhat of a selfish interest in the whole matter of water pollution, because for a good many years, Mrs. Allen and I have spent all the hours we possibly can at our home on Lake Erie about twelve miles east of Painesville, and we have raised our five children to enjoy the benefits of water skiing and swimming and water sports, and Mrs. Allen and I occasionally do a little fishing.

I think this might be of peculiar interest possibly to Colonel Neff. One of the problems we have run into on the Lake is the lack of water in the Lake, if any.

Years ago, I think, when Colonel Olstead was in Buffalo before Colonel Neff, we decided it was time we had a boat on the Lake, and with the permission and knowledge of the Army Engineers, we took 80 years of records of Lake levels, and decided if we built a little pier that would compensate for one foot each way, high or low, we would be able to get the boat in and out of the dock.

Of course, you know, as someone close to the Lake, what happened. Three years ago, we extended the dock another sixteen feet out into the Lake, and

when we had twenty-five feet of beach in front of the pier this year, why, we had to take the bull by the horns and start another project to get our little 19-foot boat with 21-inch draft out at the stern end.

Of course, the Lake's aesthetic values have been a pleasure in our life, as I hope it will continue to be.

We welcome this opportunity to present a brief statement, for as a part of the Greater Cleveland community, we share concern with the rest of the community over the problems of water quality.

Republic Steel Corporation has long been active in the field of industrial waste control, and we have been making great progress in our own efforts to contribute to improved water quality. We expect to continue to do so and we applaud the efforts of others in the community who are making equal effort to eliminate pollution of Lake Erie and its tributaries.

We are well aware that much remains to be done, and we can assure everyone that we will continue to search diligently for workable and economically feasible solutions to the problems that remain.

The Ohio Department of Health has submitted a report to this conference which contains in detail a

description of our company's progress in improving water quality in the Cuyahoga River. You will find it in Appendix (A) of the Department's report.

As the report states, we have made accomplishments in a number of areas which I shall briefly summarize for you.

A five-year program to intercept and collect all of the sanitary sewage from both the steel plant and the Bolt and Nut plant and discharge it into the city sewer system was completed in May of this year. With completion of the program we have eliminated the discharge of all sanitary wastes into the Cuyahoga River from Republic plants that employ approximately 9,500 people.

Our two coke making facilities in the Cleveland Plant are now completely equipped to prevent the discharge of coke plant wastes, including phenol, into the river and no longer represent any source of pollution. Priority was given these programs with the full knowledge and agreement of the Ohio Water Pollution Control Board.

A major problem to the steel industry is the history of pickle liquor disposal. You are all familiar, I think, with the pilot plant work and the

research for a feasible method of the elimination or treatment of sulfuric acid.

Some major steps have been taken to minimize the effect of the acid discharged; dry cleaning methods have been substituted for sulfuric acid cleaning in two operations in the steel plant, thus eliminating batch discharges. Also, controls have been installed on the discharge of acid from the continuous picklers at the strip mill, so that it is a fact that the alkalinity and pH of the river is now affected very little. The problem of iron salts, color and flocculation, however, still remains. With the construction, by Republic Steel Corporation, of a new hydrochloric acid pickler at our Gadsden, Alabama plant and the development of the first commercial plant in the steel industry for the regeneration of acid and iron, a new approach seems to be possible.

In spite of some excessive operating costs and some risk of failure, we are planning a similar recovery plant in Cleveland.

Subject to possible unforeseen delays beyond our control, we are scheduling conversion of one-third of our pickling lines in 1966, increasing to three-fourths of our pickling in 1968, with complete

conversion in 1969.

Our six blast furnaces in Cleveland are served by two 70-foot diameter settling tanks or thickeners for the four west side furnaces and one 120-foot diameter thickener for the two furnaces on the east side of the river.

The accumulated flue dusts or fine iron ore particles are removed from the thickeners and recharged back in the blast furnaces. The operation of these facilities is difficult because of the large volume of flow and the large tonnage of solids which must be handled each day. The red color or iron ore makes any of these extremely fine solids not retained by the thickeners highly visible in receiving waters.

Another of the solids causing difficulty in the steel mills is scale from the rolling mills. Settling tanks adequately baffled and recycling systems to minimize the incidence of these objectionable discharges are all being used. We are continuing our efforts in the recovery problem particularly on older installations where the problem is sometimes nearly impossible of complete solution.

Of greater importance is the loss of oil from the processing mills. This is a waste which is

readily visible and is objected to by all.

The loss of oil from a steel plant is not intentional.

Republic Steel Corporation has a program underway in four steps:

(1) To provide oil recovery facilities at scale pits where baffling is designed to trap such losses.

(2) To provide newer types of lubrication systems on all new installations to eliminate oil line failures.

(3) To redesign and relocate oil supply lines which are subject to breaks.

(4) To provide recycling and cleaning systems to prolong the life and reuse of the oil.

This is of necessity a slow program because of the age and physical condition of some facilities.

In spite of no immediate solution, it is receiving constant attention, and as an example we have installed one experimental oil treatment unit at a cost of three-quarters of a million dollars.

In conclusion, may I call your attention to the fact that, Republic Steel Corporation has already

expended in excess of 9 millions of dollars to improve water quality in the Cuyahoga River, and our program is continuing at an expanded rate. We are extremely pleased with the cooperation we have had in our efforts from the State Department of Health. We are, contrary to what seems to be general opinion, perfectly agreeable to have the State convey data, which we as a member of the Cuyahoga River Basin Water Quality Committee have supplied to the Ohio Department of Health for study by the U. S. Public Health Service, under those conditions, of course, which the State has set forth in its report to this conference.

May I assure all that Republic Steel Corporation intends to continue to cooperate with all agencies of the State, local and Federal Government in all efforts to bring about constantly improved water quality to this area.

As a large user of water, Republic Steel Corporation has a natural stake in these efforts, but we are also motivated by the honest desire to continue to make improvements in our operations for the benefit of all water users.

Thank you.

(Applause.)

MR. STEIN: Thank you very much, sir.

Are there any comments or questions?

Mr. Poston?

MR. POSTON: First, I assume that you make regular analyses of your effluents to determine the amounts and quantities of wastes?

MR. ALLEN: That is correct.

MR. POSTON: In your report here, you say that under those conditions, or under certain conditions you would give this information to the Ohio Department of Health for study by the Public Health Service.

What are those conditions that would govern here, relative to use of this information by the Public Health Service, or would you object to giving it to the Public Health Service for other uses?

MR. ALLEN: Well, I think from my standpoint, isn't this a cooperative effort that should best be performed by the Ohio Department of Health and the Public Health Service?

I don't have a copy with me, but I believe in the Ohio report, there was an outline of some conditions.

Is that true?

MR. POSTON: I don't recall that.

H. L. Allen

MR. ALLEN: Maybe Dr. Arnold can answer that.

MR. STEIN: Are there any conditions? I think if there are, this should be made clear. I don't recall any.

MR. POSTON: I wondered if we couldn't just ask the question. Would you --

MR. STEIN: Let's try one point at a time.

Are there any conditions in your report that you may want to identify?

MR. EAGLE: I am not sure they are in the report as such.

On Pages 15 and 16 of our report, we do describe something about the activities of the Committee, but I have a letter which was addressed to Mr. Northington, the Director of the Lake Erie Field Station, under date of June 14th from me, which outlines the conditions under which the Cuyahoga River Water Quality Committee would submit data to the Ohio Department -- rather, to the Public Health Service.

These conditions are:

(1) All data employed in the development of a mathematical model will be submitted through the Ohio Department of Health, and all acceptable data made available

H. L. Allen

to the Department by the Cuyahoga River Water Quality Committee will be used.

(2) In the use of the model to determine various means of treatment and water quality, the State will specify the parameters and the conditions to be considered.

(3) The model will be available to the State for future use in evaluating conditions.

(4) The final report of these investigations will be a joint report by the U. S. Public Health Service and the Ohio Department of Health.

I believe these were generally agreed to by the staff of the Lake Erie Field Project as being adequate for their purposes in the comprehensive survey.

MR. STEIN: This deals just with material for a model.

I think the question here is, if you get data from the Republic Steel Corporation and you have it in your files, and the U. S. Public Health Service or any Federal agency wants that material to use for its own evaluation, can they come and get those figures

from you?

That relates to effluent data on quantity and quality going into public waters.

MR. POSTON: I think this is an appropriate question.

MR. ALLEN: I can see that there can be no objection, provided, as the previous speaker, Mr. Pine, pointed out, that the company should have some exercise or control as to whether the samples are representative of a particular day's operation or not.

MR. STEIN: I will give you my philosophy on that.

I think that is perfectly reasonable, and I am also in favor of splitting samples.

MR. ALLEN: This has been done in the past, I am sure, with the State people.

MR. STEIN: Obviously, what I think any responsible agency wants is representative figures, and not figures which reflect a stream condition either way.

MR. ALLEN: That is correct.

MR. STEIN: I think that is a perfectly reasonable request.

MR. ALLEN: And I am sure that the efforts of the Public Health Service and the Ohio Department of

Health are to the same end.

MR. STEIN: That is right. I can foresee no difficulty with that policy.

Can you, Mr. Poston?

MR. POSTON: No, sir.

I understand that Republic Steel will share with the Public Health Service information on quality and quantity of wastes being discharged to the river.

MR. STEIN: Are there any further comments or questions?

(No response.)

MR. STEIN: If not, thank you very much.

We will stand recessed for lunch until a quarter to two.

(Whereupon, at 12:20 p.m., a luncheon recess was taken.)

AFTERNOON SESSION

1:45 P.M.

MR. STEIN: May we reconvene?

Dr. Arnold, will you continue, please?

DR. ARNOLD: We would like to proceed with the presentation by the industries, and call on Mr. R. M. Whitt of The Sherwin-Williams Company.

STATEMENT OF

R. M. WHITT

THE SHERWIN-WILLIAMS COMPANY

CLEVELAND, OHIO

MR. WHITT: Mr. Chairman, Conferees, Ladies and Gentlemen:

My name is R. M. Whitt and I am representing the Sherwin-Williams Company of Cleveland, Ohio.

We appreciate this opportunity to relate to this committee the problems encountered and the accomplishments made in relation to our comparatively small waste disposal problems.

I will not require but a few minutes of your time; however, I feel that when progress is made

it should be reported.

We have a Linseed Oil Plant which is located on the Cuyahoga River in Cleveland, Ohio. This operation consists of processing flaxseed to produce linseed oil for our company requirements.

Further refining of the linseed oil provides finished products required in our business; however, it also produces by-products, which when processed to make recovery of entrained linseed oil leaves fluid solid combinations which are classed as industrial waste pollution.

Several years ago the State of Ohio, Department of Health, requested that we report to them the nature of the industrial waste on a regular basis and a permit to continue discharging waste into the river was granted with the instruction that we find or develop a system which would eliminate this pollution.

The chemical and physical nature of the waste necessitated much research into methods of disposal and available equipment. It was only after several years of cooperative working with the City of Cleveland Sewage disposal people and the Ohio Department of Health that we finally solved the problem. We have engineered and have on order the equipment necessary for elimination

of this pollution. Delivery of equipment is a factor; however, we hope to complete our system before the end of the year.

Our permit from the State also covered the discharge of sanitary sewage into the Cuyahoga River until such time as the City of Cleveland installed a low level sanitary system in our area.

I am pleased to report that our Sanitary Sewer System is completed and is discharging into the City System, which I understand has been operated on a test basis and will go into regular service in the very near future.

In connection with that, Mr. DeMelto reported this morning that it was already in service. However, I have been in this conference for three days and I guess they started the pump since I came here.

MR. STEIN: These conferences do some good, you can see.

MR. WHITT: Yes, they do.

While our own problems are nearly eliminated the Sherwin-Williams Company recognizes the need for general improvement of water conditions here and throughout the area, and will continue to participate in the several civic minded organizations in which we are now active.

R. M. Whitt

We would like to take this opportunity to thank the Ohio Department of Health and the City of Cleveland for their cooperation in helping us resolve our problems.

Thank you, Mr. Chairman.

(Applause.)

MR. STEIN: Thank you.

Are there any comments or questions?

MR. POSTON: I would like to ask Mr. Whitt whether the Sherwin-Williams Company makes analyses of their effluents to determine the quantity and kinds of pollutants that are emptied to the river?

MR. WHITT: We do.

MR. POSTON: Would you be willing to share this information with the Public Health Service?

MR. WHITT: Yes. In a publicity release, released about a month ago, we indicated that too, because we feel that we have nothing to lose and everything to gain through cooperative effort in this pollution problem.

MR. POSTON: Thank you very much, Mr. Whitt.

MR. WHITT: You're welcome.

MR. STEIN: Are there any further comments or questions?

(No response.)

MR. STEIN: If not, thank you very much for your statement.

MR. WHITT: You're welcome.

MR. STEIN: Dr. Arnold?

DR. ARNOLD: We will now hear from Mr. R. N. Simonsen of the Standard Oil Company of Ohio.

STATEMENT OF

R. N. SIMONSEN

CHEMICAL ENGINEER

THE STANDARD OIL COMPANY (OHIO)

MR. SIMONSEN: Mr. Chairman, Conferees, Ladies and Gentlemen:

My name is R. N. Simonsen, and I wish to make a statement on behalf of The Standard Oil Company of Ohio. By way of introduction and to qualify my presence before this conference, I would like to state that I am a chemical engineer and have devoted the last 15 years of my employment with Sohio to full-time work on pollution control. My title is Consultant - Air and Stream Pollution.

In addition to work on Sohio problems, I have actively participated in the affairs of numerous organizations concerned with pollution control -- efforts which have involved cooperative work with local, state, interstate, and U. S. Public Health Service personnel. I serve as Chairman of the American Petroleum Institute Committee on Disposal of Refinery Wastes, which has been engaged since 1929 in study and research

on refinery waste disposal problems and publication of technical manuals detailing problems and their solutions. These have been widely distributed to control officials and are available to anyone interested.

The Standard Oil Company operates a gasoline refinery and a small lube refinery in Cleveland, a refinery and two chemical plants in Lima, and a refinery at Toledo. All are in the Lake Erie Watershed, and all operate under permit from the Ohio Water Pollution Control Board.

I will not go into details of all the pollution control measures taken at all of these plants.

Reports submitted earlier in this conference by the U. S. Public Health Service and the Ohio Department of Health have both made specific recommendations regarding Sohio installations. We wish to comment on these. In addition, pre-conference publicity has implied that all industry is uncooperative with those fighting the pollution battle, particularly with respect to release of data. At no time has Sohio refused to give data to any qualified public agency.

Oil removal was noted by the Public Health Service report as a necessary action to be taken at No. One Refinery in Cleveland. The fact is, over the

years this refinery has done an increasingly good job of oil removal. The steps taken, at a $2 million cost, and the results achieved were made public less than one year ago in a report issued by the Ohio Department of Health and the Cuyahoga River Basin Water Quality Committee.

The effluent is continuously sampled for oil 24 hours per day by an automatic composite sampler and the results reported to the State. At average Cuyahoga River flows, the oil we lose would account for less than 1/4 part per million of oil in the river itself. This refinery will be shut down in early 1966. We are quite certain that this event will not make a detectable change in the oil content or appearance of the Cuyahoga. I might say, too, that the refinery has been host to many visitors interested in seeing how we handle oily water. This included both civic and scientific delegations from both the United States and foreign countries.

Although No. Two Refinery has been classified as having adequate treatment, it may be of interest to note that the quality of the small effluent from this lube plant is acceptable for discharge to a city sanitary sewer and can be so directed on short notice. In

fact, this is where the effluent used to go, but its quality was too good to justify taking up needed capacity at the Cleveland Southerly Sewage Treatment Plant. However, we are ready to revert to the city sewer whenever conditions warrant.

Our refinery at Lima, Ohio, on the Ottawa River in the upper reaches of the Maumee Basin, has phenol reduction noted as a specific recommendation. Based upon the phenol levels below Lima reported in Part 2 of the Public Health Service report, we could understand this recommendation, but are unable to reconcile the data with our own. We do report the discharge of about 100 pounds of phenol per day. Analysis of our own effluent for many years, plus data from several phenol surveys of the river have indicated, however, that natural oxidation of the phenolic material from our refinery is 100 per cent complete in a satisfactorily short distance downstream before any water use is damaged. This was confirmed in a survey early this year in cold weather when phenol destruction in the river should be slow. We plan to repeat the survey. If our findings cannot be reconciled and the State concludes that phenols from this source <u>do</u> impair water use, we will be prepared

to show how they can be reduced and at what cost. Present indications are that the cost would be about $200,000. Although oil reduction is not mentioned for this refinery, oil is noted as a pollutant in the area. As a matter of interest, since the installation 4 years ago of the refinery's $250,000 combination chemical flocculation-dissolved air flotation unit following the conventional refinery oil separation facilities, effluent oil contents have averaged only 20 parts per million in a flow of about 2,000 gallons per minute.

Sohio also operates two chemical plants in Lima -- one whose principal product is acrylonitrile and the other whose products are anhydrous ammonia, urea, dry ice, and a variety of fertilizer solutions. Pollution downstream is reported to be severe. We agree. We have had major problems with control of waste disposal from both of these plants. Waste control measures were important parts of the original installation for both of these plants. They were in our opinion the best treatment provisions available at the time and were installed after consultation with State pollution control authorities.

These provisions did not prove as adequate

in practice as had been anticipated. This was especially true in the acrylonitrile plant where a $100,000 solvent extraction system for waste purification was ineffective and had to be abandoned. Steps were immediately taken strip and then to digest waste streams. While these steps were being taken, studies were initiated to develop more effective methods of treatment. This involved studies by our own research department, consultation with others in the industry, field and laboratory studies on the wastes and receiving waters by two well-known consulting organizations, and included consultation with personnel at the Public Health Service Robert A. Taft Sanitary Engineering Center. These studies showed the most positive method of treatment to be destruction by incineration. As an immediate step, existing equipment was revamped to this service and orders placed for additional equipment. Incinerators, now being installed at a cost of $500,000, will be placed in operation next week to incinerate all the process wastes from the acrylo plant at a yearly operating cost in excess of $1 million per year.

These are the wastes responsible for the color of the plant effluent shown in the Magazine Section of the August 1, 1965 Plain Dealer, which I am sure

many of you saw.

Other pollution control improvements, costing an additional $500,000 have either been placed in operation or are now under construction to reduce losses of nitrogen compounds -- our other major problem. Details have been fully discussed with the State. Current nitrogen levels in the Ottawa River are substantially below those in the Public Health Service study just reported. Further improvement will result when facilities now nearly completed are placed in service.

With respect to industrial cooperation, Sohio feels it has cooperated fully with every request made by the Public Health Service. The Sohio Chemical Plant, where our problems have been the most difficult, assisted by doing some of the specialized analytical work required by the Public Health Service in their basin studies. In addition, the plant made available analytical data from our own river monitoring program. I would just like to repeat that we <u>know</u> there are serious problems in the area below Lima. By next week we will have resorted to brute-force liquid incineration to solve the problems of one plant. Nitrogen losses are on the downgrade at the other chemical plant, and we will keep on reviewing progress and plans with

the State to achieve satisfactory control. We monitor our effluent and both we and the State monitor the river itself.

Our last manufacturing facility is our Toledo Refinery located just east of Toledo in Oregon. Effluent discharges to Otter Creek just above its discharge to Maumee Bay. Little is said specifically about this refinery, so there is no point in taking up the time of the conference with detailed discussion. With the expansion of Toledo Refinery now under way, it will become our largest refinery. Although we have a sizable investment in waste control facilities now, we have been making plans for improvements that will insure that we can meet future receiving water quality requirements. The relation of effluent volume and characteristics to receiving waters of Maumee Bay have not been well defined in the past. We hope that the report of the findings of the comprehensive Lake Erie Survey will provide a sound basis for planning future improvements to our system.

In summary, we have an overall investment in water pollution control -- not counting sewers which are a major cost -- of approximately $6,000,000. It has been our policy to consider the cost of installing

and operating waste control equipment, whether required by law or not, as a necessary cost of doing business. We have discussed our waste control problems with qualified, interested personnel in the past, including representatives from the Public Health Service, and will continue to do so in the future. Sohio, as a matter of policy, has in the past and will continue in the future, to spend the money necessary for whatever steps are required to meet any reasonable stream quality goals that may be established.

Thank you.

(Applause.)

MR. STEIN: Thank you very much.

Are there any comments or questions?

MR. POSTON: Mr. Simonsen, for the record, I would like to ask whether or not the Standard Oil Company of Ohio makes regular analyses of the polluting materials that might be emptied to the streams, and what is their policy relative to the release of this information to the Public Health Service, Department of Health, Education, and Welfare?

MR. SIMONSEN: We are happy to release data to any qualified agency, and we do consider the Public Health Service a qualified agency.

(Laughter.)

R. N. Simonsen

MR. POSTON: Thank you, Mr. Simonsen.

MR. STEIN: Are there any other comments or questions?

(No response.)

MR. STEIN: If not, thank you very much, Mr. Simonsen.

There is one question I would like to ask the Ohio people. I have checked the Ohio report with reference to the Republic Steel Corporation statement that they spent $9 million to abate water pollution. I didn't see anything in your report.

Do you have the information in Ohio on what water pollution treatment facilities Republic did for the $9 million? That is quite a sum.

MR. EAGLE: The statement was in the report that was given.

MR. STEIN: Yes, that they spent $9 million to improve water quality.

Have you any information as to what they did?

MR. EAGLE: In the Republic statement?

MR. STEIN: Yes.

MR. EAGLE: Yes, we have a record of what they have done.

MR. STEIN: Do you recall what it is?

MR. EAGLE: They covered that in their report. They have settling basins and recirculation of much of the water, and oil skimming, and all that sort of thing.

MR. STEIN: And that cost $9 million?

MR. EAGLE: Well, of course, I had nothing to do with the preparation of that cost estimate.

MR. STEIN: I recognize --

MR. EAGLE: This is a tremendously large plant. As a matter of fact, it is three plants.

MR. STEIN: Yes, but those items you point out are the ones that you know are pollution abatement facilities.

MR. EAGLE: The ones I pointed out are pollution abatement facilities.

MR. STEIN: Yes. I would agree with that.

MR. EAGLE: Yes.

MR. STEIN: Well, I am not sure, and I guess Republic should speak for themselves, and maybe they have left, but I am not sure that the $9 million will just cover those. Maybe they do.

MR. EAGLE: I think, Mr. Stein, that they can document this.

They did not give us the detail, of course,

of what each piece of equipment cost, but I feel confident that they can document it.

MR. STEIN: I am sure they can, but this revises my estimate, because I didn't know that pollution abatement in the equipment that you pointed out was so expensive.

Of course, we don't have very good information on industrial equipment. Sometimes we have found though that when industry has said they have used money for pollution abatement, this is really for production purposes and just incidentally abates pollution.

I don't want to draw any conclusions on this. I thought you might have had it, and Republic may not be here, but I looked through the report and I was unable to identify any amounts that, in my experience, would amount to $9 million.

Are there any further comments or questions?

(No response.)

MR. STEIN: If not, I have a few announcements.

Dr. Meredith Thompson of New York has called and he has left this message: He wishes this announced to the conferees, he said, and I will try to give you the message as I got it, and the press. I would hope

he means for all the other people here too.

He said that the New York conferee left for a meeting on water quality on the Hudson River for the New York, or proposed New York City water intake, and he also said that ordinarily the representatives of New York State do not leave without communication.

Mr. Boardman, do you have a statement to make at this time?

MR. BOARDMAN: It is a very appropriate follow-up to this one.

It will be necessary for me to leave this afternoon at approximately four o'clock, and the conference may not be ended by that time.

We are by no means abandoning the conference. Our formal presentation and our Pennsylvania people will appear at the Buffalo reconvened session, so we certainly are interested in this conference and will be in Buffalo.

MR. STEIN: Before we call on Dr. Arnold, I would like to give you the procedure we expect to follow for the rest of the conference.

We will attempt to go through the rest of the day or evening, and spend as much time as we have to hear all the others who have been invited and wish to participate.

After that is completed, the conferees will retire for about two hours, and, after that time, we will have an announcement to make.

I hope we will have this room at the time. If we don't, by that time, or by the time we complete all the statements, I hope to tell you where we will reconvene for the announcement.

MR. MORR: Mr. Stein, I will have to be excused from that evening meeting of the conferees. I have another appointment in Columbus this evening.

What is the purpose of that meeting?

MR. STEIN: The purpose, as I understand it, is for the conferees to see what conclusions we can arrive at on the basis of what has been said so far.

MR. MORR: Even so, some of the findings of the report are inconclusive.

MR. STEIN: I would not presuppose they are inconclusive. If they are inconclusive, and the conferees feel that way, I would be glad to come back and make that announcement.

MR. MORR: I just wanted to know the purpose of that meeting.

MR. STEIN: Yes, to see how far we can arrive at agreement at this point, and what announcement

we can make.

Obviously, I am not making any judgments as to what we can accomplish at that meeting.

MR. MORR: Then, in the record so far, I think we have determined that there are several areas of inconclusion, and I understood, as one conferee, that perhaps we would have no conclusions until after the Buffalo or other meetings would follow.

MR. STEIN: I am not sure that we are going to have the same conferees at Buffalo, either from Pennsylvania or New York, and, if we don't, we are going to be hard put for those people to come to conclusive agreements.

On your other statement, Mr. Morr, that there are several areas that are inconclusive, I have not polled the other conferees yet. That may very well be, but there may be several areas where conclusions can be reached, and I think if we have the people who have heard all the statements here, we may be able to achieve that and save the time of the people at Buffalo who may not have heard this material here.

We may have different representatives from two States.

Mr. Boardman?

MR. BOARDMAN: I would just like to request that in such a meeting, no recommendation be made involving Pennsylvania until after we have had our chance to talk at Buffalo.

MR. STEIN: I think that is a very good suggestion. I don't know that anyone has contemplated that.

MR. BOARDMAN: I just want to make sure.

MR. STEIN: I am informed that after the conferees meet, we will, in two hours I hope, reappear in this room for an announcement after the adjournment.

Dr. Arnold?

DR. ARNOLD: Mr. Harold F. Elkin will make the presentation for the Sun Oil Company of Toledo.

STATEMENT OF

HAROLD F. ELKIN

COORDINATOR OF POLLUTION ABATEMENT

SUN OIL COMPANY

MR. ELKIN: Mr. Chairman, we note, as one of the industries operating on the Delaware River, that this emergency which has developed on the Hudson River is of vital interest to us also.

Mr. Chairman, Conferees, Ladies and Gentlemen:

My name is Harold F. Elkin, and I am Chairman of the Sun Oil Company Coordinating Committee on Air and Water Resources.

I am accompanied today by Mr. Lawrence R. Kumnick, Loss and Waste Control Engineer at the Sun Oil Company Toledo Refinery.

Sun Oil Company welcomes this opportunity to review accomplishments in control of water pollution at its Toledo, Ohio, Refinery where 95,000 barrels per day of crude oil are processed into a broad range of petroleum products.

During the last 16 years, Sun Oil Company has invested more than $1,700,000 in capital expenditures for

water pollution abatement facilities at the Toledo Refinery. These facilities include API-design oil and water separators, segregated sewer systems, a sulfide and mercaptan stripping tower facility, an 8,000,000 gallon impounding-equalization basin and a waste water reutilization and secondary treatment system involving unusually efficient biological oxidation of waste components through the use of mechanical draft cooling towers. However, the dollar expenditures incurred in installing these facilities are not fully indicative of the extensive accomplishments in reduction of net waste load and in water conservation at Sun's Toledo Refinery which have attracted international attention during the past 11 years of complete operation.

The first slide represents a schematic Flow Diagram which will be of interest to the conferees.

(The Flow Diagram is as follows:)

FIGURE 1

FLOW DIAGRAM OF REUSE WATER SYSTEM — TOLEDO REFINERY

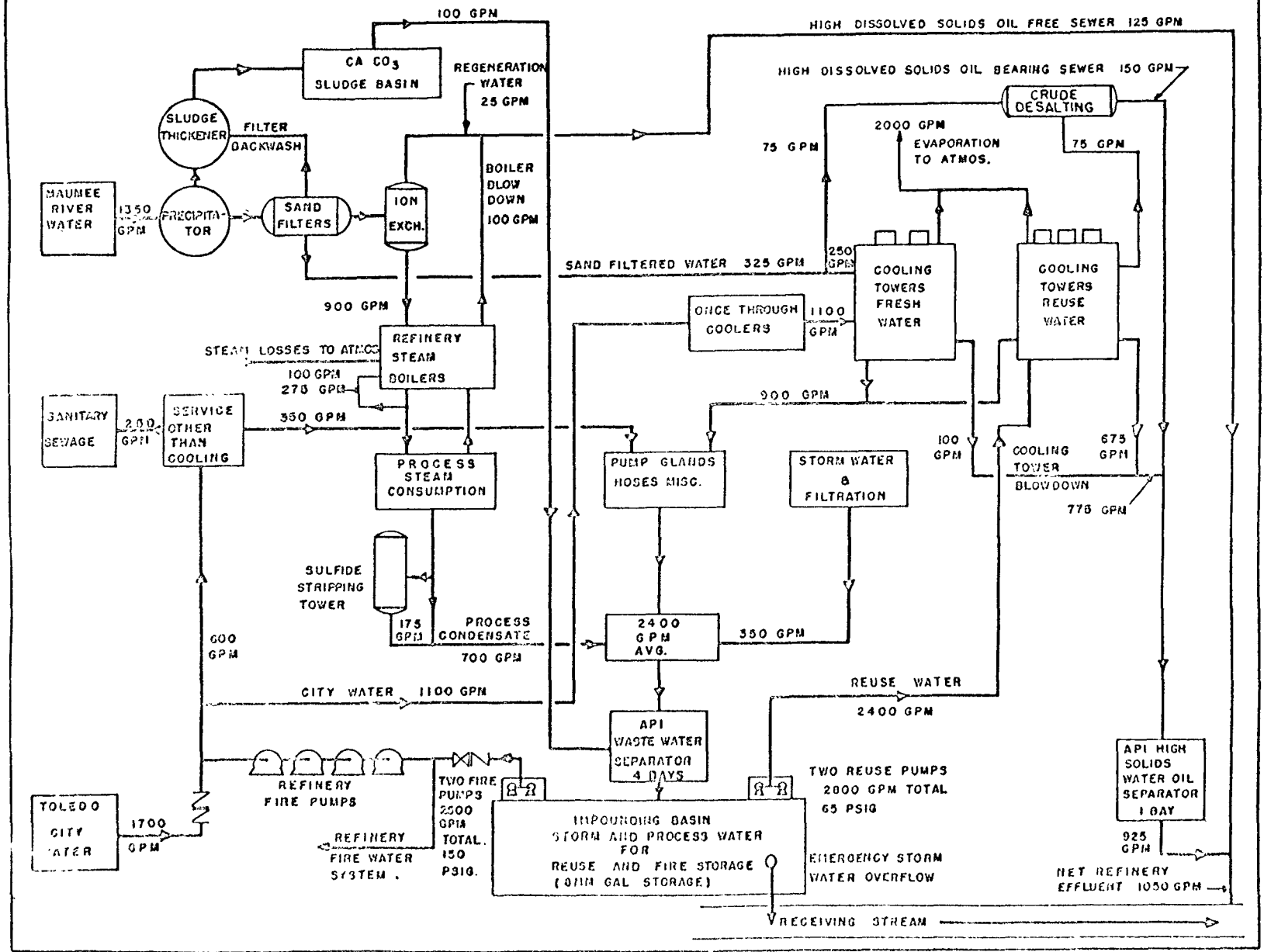

SUN OIL COMPANY 1963

Harold F. Elkin

This may be difficult to see from the rear of the room, but, in brief, this is a descriptive flow diagram. Those of you who have the complete text of our presentation today will find a reproduction of this attached.

The far left shows the refinery water intake sources, in our case from the Maumee River and also from the Toledo City water system. The water is employed in conventional use with pretreatment through the water plant. Process steam condensates are treated in a sulfide stripping tower. General waste waters, including process wastes as well as ground drainage and miscellaneous streams, are collected, and processed through a conventional API-design oil and water separator for primary oil removal.

Drainage then discharges into the 8,000,000 gallon impounding basin, which provides the multiple functions of equalization, initial biological oxidation and removal of settleable solids.

Another purpose of passing interest, but nevertheless an interesting part of the system, is the alternative water use as emergency fire water.

An interesting feature here is the fact that when this emergency water is taken from the basin for firefighting, it is automatically returned through the same drainage system in the plant, back to the impounding

basin, so in effect we have a virtually inexhaustible water supply for fire-fighting purposes.

Normally, the water in the impounding basin, after two to three days of settling, is then pumped as makeup into mechanical draft cooling towers for secondary biological treatment. These towers are not specially designed; they were in conventional cooling service in the Refinery prior to our installing the biological oxidation system. We have achieved the utilization of the water, as well as simultaneous biological oxidation. The oxidation rate has consistently demonstrated a very high rate of removal.

Could I have the next slide, please?

This (indicating) is the impounding basin shown at the bottom of the schematic diagram, approximately 1,200 feet by 200 feet, and approximately 6 to 8 feet deep. The API separators and oil skimming tanks are shown in the background at the far end of the impounding basin.

This (indicating) is one of the cooling towers that was initially used for the biological oxidation, as I have already mentioned.

Bear in mind that the water goes directly back from the impounding basin without any additional intermediate or chemical treatment prior to the utilization as conventional

makeup water to the cooling system.

Next slide, please.

This is a rebuilt tower. The original tower that was used for this purpose happened to be a forced-draft tower, and was replaced by this newer induced-draft tower. But the point is that initially we were using an existing older cooling tower.

Next slide, please.

These slides (indicating) were of historical interest at the time they were taken. They are electromicrographs of approximately 1/25,000 power. These were early electron microscopic photographs of bacteria from the activated sludge in the tower system.

Next slide, please.

Here again (indicating) is a high-powered magnification of bacteria in the circulating system.

Next slide, please.

These (indicating) are some data showing the operation of the cooling tower system and demonstrating that these are conventional cooling towers with conventional cooling water rates, air flow rates, and temperature.

Next slide, please.

Here (indicating) are some typical data for removal of phenolics. This is a material balance demonstrating

where the phenols are removed. One of the obvious initial questions was, where does the biological oxidation take place. As you can see, the bulk of the removal occurs in the tower structure and in the water distribution system itself.

Next slide, please.

We are back to the beginning. That completes the slides. Thank you.

The high hydraulic application rates and the normal recirculation of cooling water provide dilution factors ranging from 17 to 30 to 1 which safeguard the biological oxidation system from any sudden organic waste "shock loadings."

I might mention at this point that the system, by recycling and reutilizing upwards of 40 to 50 percent of the waste water of the plant, automatically cuts down the water intake to the plant. It accomplishes this by the same 40 to 50 percent of what we normally would be taking in, and, at the same time, the net discharged volume is correspondingly reduced. The typical dry weather flow discharge rates are in the order of approximately 1,000 to 1,050 gallons per minute, which, for a refinery of this particular size, is a low discharge water rate.

The cooling tower bio-oxidation step has been likened by other investigators to a combination of high-rate trickling filtration and activated sludge procedures.

The blowdown from the cooling tower systems is carefully controlled to meet the oxidation capacities required and represents the biologically treated effluent. This water is discharged into a final oil-water separator, equipped with flight scrapers and desludging equipment for removal of residual bacterial sludge. Crude oil desalting water and blowdown from the fresh water cooling tower systems are also directed to this separator. The effluent from the final separator combines with oil-free streams including blowdown from boilers and ion exchange regeneration wastes. This combined stream represents the total refinery effluent water.

Pollutant removal efficiencies in the cooling tower bio-oxidation systems have proven highly efficient during 11 years of operation. Based on total loadings before treatment, the removal of phenolic compounds has averaged over 99.0%, and COD and BOD reduction has been consistently over 90%.

Based on recent inplant material balance studies, the overall Toledo Refinery pollution control system since

1957 has removed approximately 500 pounds per day of phenolic compounds. COD is reduced from initial levels of 20,000-30,000 pounds per day down to an average of 4,000-6,000 pounds per day. Initial refinery waste load BOD of 11,000-15,000 pounds per day before treatment is reduced to a level of 1,000-2,000 pounds per day in the final effluent. Oil in the drainage system has been lowered from approximately 20,000-35,000 gallons per day to an average of approximately 100 gallons per day in the final effluent.

I might add that due to recent changes and installation of additional equipment, we are now effecting significant oil removals well below the 100 gallons per day figure.

Sun Oil Company installed the cooling tower water reuse system at the Toledo Refinery voluntarily with full consultation and approval of the State of Ohio Department of Health, This biological oxidation-cooling tower process has been extensively reported in the technical literature (partial listing in the attached references, for the record), and the novel approach of simultaneously providing a source of reuse water supply together with economical biological treatment and minimizing effluent discharge volume has been the subject of interested inquiry by industrial waste specialists in industry, State regulatory agencies, and the U. S. Public Health Service.

Harold F. Elkin

Analytical tests of the total refinery effluent water have been reported on a monthly basis to the Ohio Department of Health for the past 12 years. Data reported include discharge flow rates, oil content, pH, phenols, sulfides, COD and BOD. Since 1959, suspended solids and settleable solids have also been routinely included.

Samples for determination of phenols and oil content are obtained by a continuous composite sampler at the final outfall weir. Two 48-hour composite and 72-hour composite samples are collected each week. The phenol samples are chemically fixed during sampling to inhibit oxidation prior to conducting the analyses. Sulfides and pH are determined daily while BOD, COD, suspended and settleable solids are run four times per month. A summary of these data over the past 12 years is attached on Table 1 to our statement, and this information is available in detailed form to all the conferees and other parties in interest.

(Table 1 is as follows:)

SUMMARY OF AVERAGE POLLUTANT DATA ON FINAL WATER EFFLUENT OF THE TOLEDO REFINERY OF SUN OIL COMPANY FROM 1953 TO 1965, INCL.

	1953	1954	1955	1956	1957	1958	1959	1960	1961	1962	1963	1964	1ST 6 MO. 1965
Oil, Gal./Day	78	104	123	104	96	101	91	104	106	112	144	102	70
Phenols Lbs./Day	482	514	482	299	104	11	7.8	5.7	10.1	30.8	11.9	5.9	12.2
Sulfides Lbs./Day	148	119	139	13	15	2	1.1	0.1	0.1	0.2	0.6	0.0	0.0
Chemical Oxygen Demand Lbs./Day	8115	7247	8184	7025	8332	4594	5643	5455	5650	8512	7212	4706	4309
Biochemical Oxygen Demand Lbs./Day	3264	2904	3290	1715	1449	1020	1174	913	749	980	1363	1973	1835
Suspended Solids Lbs./Day							1236	1535	1475	1789	1527	1660	1608
Settleable Solids Lbs./Day							613	641	629	768	797	789	804
Flow-Mil.Gal/Day	2.435	2.837	3.081	2.375	2.046	1.498	1.439	1.563	1.469	2.096	1.744	1.460	1.563

Harold F. Elkin

Gentlemen, thank you very much for the opportunity of making this presentation.

(Applause.)

MR. STEIN: Thank you, Mr. Elkin.

Are there any comments or questions?

Mr. Eagle.

MR. EAGLE: Yes. For the record, and I think this is an official copy, for those who do not have it in their copy, on Page 9 of Table 3 in Appendix B, in addition, under "Type of Treatment," in addition to "Oil Separator Lagoons," we should add "Biological treatment for phenol and organic removal."

Mr. Elkin has described it in his presentation, but I just want to be sure that this is included in the record.

MR. STEIN: That refers to the Sun Oil Company?

MR.EAGLE: Sun Oil, yes.

MR. STEIN: Thank you.

Are there any other comments or questions?

Mr. Poston.

MR. POSTON: Again, for the record, Mr. Elkin, I would like to confirm that the Sun Oil Company policy permits the use, or the Public Health Service to

share with you data on water quality, discharges of wastes to streams, quantity and quality both; is that right?

MR. ELKIN: Yes, Mr. Poston. This has been a traditional company policy of Sun Oil Company.

MR. POSTON: I know that in our Delaware River Project, we have a close working relationship with you.

Maybe you would care to tell us about this?

MR. ELKIN: Yes, I would be very happy to.

MR. POSTON: The general procedure for the dissemination of data.

MR. ELKIN: We, along with others in the industrial group along the Delaware, in connection with the study which the Public Health Service has been conducting, have been participating, I would say, for the better part of two years in a rather extensive plant effluent testing program involving 24-hour continual sampling, approximately once per month, and, in some cases, twice per month.

The arrangement has been most satisfactory. I think we, as a company, feel that we have learned a great deal from this sampling program. We have, as a matter of course, split the samples -- I should say your people have split the samples with us, and we have

run corroborating analyses of the various parameters under consideration during the sampling program.

I might add that our sampling program on the Delaware River estuary study was recently completed after about approximately one and a half years of plant sampling.

MR. POSTON: Thank you, Mr. Elkin.

MR. ELKIN: We have been quite pleased to cooperate in that program.

MR. STEIN: Mr. Oeming?

MR. OEMING: Mr. Chairman and conferees, I can't refrain from mentioning my former associations with Mr. Elkin. They are of quite long standing, and I can't refrain from specifically pointing out what I consider was a real constructive attitude on the part of the company, back in the days when the company was locating a refinery on the St. Clair River at Sarnia, and coincident with the operation of that refinery, they recognized the necessity of taking care of the phenolic compounds prior to starting operations in order to prevent both international complications and state complications with Michigan, with particularly the water supplies taken from the connecting channels below Sarnia.

The extent to which the company had to go is illustrated, I think, by the difficulties in getting a biological oxidation plant under construction and in operation, particularly in operation in that it became necessary to transport bacteria seething from Michigan industry over to Sarnia in order to cease the operation and start the new operation, and a good deal of difficulty was experienced, because I don't believe that the Canadians liked it very much taking bacteria from the United States over across the way, and this was held up for some considerable time, but it was finally released to be used by the Sun Oil Company in Sarnia.

MR. ELKIN: I certainly remember with a great deal of gratitude, Mr. Oeming, the assistance of the State of Michigan relative to the design of that plant, and, of course, initially getting the plant started, and for the excellent and helpful cooperation of the United States and Canadian representatives at the time.

Transporting bacteria across the international boundary presented interesting problems.

MR. STEIN: Thank you.

Are there any further questions or comments?

(No response.)

Harold F. Elkin

MR. STEIN: If not, thank you very much, Mr. Elkin, for a very excellent presentation.

Mr. Oeming?

MR. OEMING: Mr. Chairman and conferees, during yesterday's session I obtained your consent to interrupt the Ohio presentation for an appearance by one of our Michigan people, and I would like, at this time, with your approval and permission, to call upon Miss Olga Madar of Detroit, who is here to present a statement on behalf of the UAW-CIO.

MR. STEIN: I think we agreed to this yesterday.

Miss Madar, would you take the podium and go right ahead?

Olga M. Madar

STATEMENT OF

OLGA M. MADAR,

UNITED AUTOMOBILE WORKERS-CIO

RECREATION DEPARTMENT,

DETROIT, MICHIGAN

MISS MADAR: Mr. Chairman and Conferees:

First let me thank you for letting me come in at this late date and changing the schedule. I appreciate it very much.

I have filed here for the record the testimony which was submitted at the second session of the Conference on Pollution of the Detroit River-Lake Erie, and their Tributaries in the State of Michigan. It is relevant to this conference here. I would like to summarize it and file it for the record of this conference.

In addition to that, I would like to have an extension of those remarks for this particular conference. The recorder will have them. There will be points on which I will make some other comments, however.

MR. STEIN: How long do you want us to keep

the record open, Miss Madar?

MISS MADAR: No. What I am saying is that I would like to file the testimony from the last conference, if I may.

MR. STEIN: Yes.

MISS MADAR: In its entirety. I will not, however, repeat it here today, except to summarize it.

MR. STEIN: Right.

MISS MADAR: And then I will present a short statement now.

MR. STEIN: Thank you very much.

Go right ahead.

MISS MADAR: You will recall that in the last presentation, we indicated in the area that had been reported upon at that particular session that we had some 350,000 members in the area surrounding the Detroit River and Lake Erie.

However, in respect to the area which is now being discussed, we have some approximately 500,000 members.

Although we recognize that pollution of our waters did exist, we must admit we were appalled at the rate of the deterioration and the extent of the pollution of Lake Erie in the detailed report as

Olga M. Madar

presented at this time.

Before, we welcomed the cooperation, and we now urgently request that the State agencies and the U. S. Department of Health, Education, and Welfare do all that they can to speed up their efforts to eliminate and prevent continuous and continued pollution.

As in the previous conference, the Public Health Service report indicates conclusively that some municipalities and industries are pouring tons of pollutants in Lake Erie. Unfortunately, these same municipalities and industries have exerted political pressures on their state legislatures and have made it difficult to enact effective state legislation for the establishment and enforcement of adequate standards on the disposal of wastes. As a result, we have antiquated state laws such as the Ohio statute, which prohibits the Ohio Department of Health from releasing information on industrial wastes without permission from the industry involved, which I understand you have already been discussing here.

I had an opportunity, incidentally, to glance at the newspapers before I came here, and I am very glad and gratified, and I know that our organization is gratified, that there are some industries who

are willing to release this information.

I am certain, however, that the membership in this area would like to see the legislation changed so that it is possible to get the utmost cooperation, and not just do it on an isolated instance.

To go on with the official presentation:

And it was only this past month that Michigan was successful in enacting legislation which, hopefully, will enable the State to prevent continued pollution of its waters. Although the Detroit area is one of the principal pollution sources of Lake Erie, Michigan did not have a single conviction in twenty-four years under the old legislation.

As I said, the newspapers report that the situation will be different, and that the officials will have better opportunity to do the job that they are attempting to do.

The circumstances leading to the pollution of Lake Erie, and the inability of individual states to control the situation, amply demonstrate the need for the establishment and enforcement of Federal water quality standards.

Although the Lake Erie Study now provides the technical data which permits the Federal Government

to intervene, we are confident that the citizens of the five states involved expect aggressive action by municipalities and states in implementing the recommendations. With public interest, health and welfare at stake, lengthy hearings and action by the United States Attorney General should not be necessary.

We understand that there are the same kinds of problems occurring here in Ohio and the other states, that we have had in Michigan, in which the municipalities and the municipal officials have found it necessary to defend the programs which they have done in the past, and we do give due credit for all of the attempts which have been made, but, unfortunately, Lake Erie is polluted, so apparently we are not doing the kind of job that we ought to do, and it seems to us that at this point it is time for some action and not looking back, but in terms of looking ahead as to what we can do.

The actions requested in the recommendations of the Report are essential and reasonable. The cost of implementing the recommendations may seem to be staggering, but we cannot afford to lose Lake Erie.

In our previous statement, we said that we understood industry protested at the cost, that this would be an expected reaction, but once having made that

protest, we believe that they ought to take the necessary action, remedial action. But, what is more important, as we have looked at the findings of this latest report, we note that there are more industries which are involved in pollution, and we get the impression that in some instances -- and now I am talking about those industries which are guilty of the pollution -- we get the impression that they feel that it was perfectly all right to pollute in the first instance.

We do not believe so, and we also believe that there is a responsibility to clear out of the water whatever is put into that water to pollute it.

Despite the fact that we have heard that the report is unreasonable from some in terms of the cost that would be involved, it seems that in our history, in our present state of knowledge and technology, that we ought to be able to find the means and resources, and that those who are responsible must pay the major share in terms of cleaning up the pollution, and also to take the steps to prevent it in the future.

The UAW accepts the challenge of the United States Public Health Service that each and every citizen of the Lake Erie Basin must bear a share of the responsibility to use wisely and preserve for

posterity the valuable water resource of Lake Erie.

We are not naive and we realize that action will only be forthcoming, however, as citizens are informed and call upon the responsible government agencies and industries to implement the recommendations of the Public Health Service. We are exploring, therefore, the possibility of joining forces with other trade unions in the Lake Erie Basin to present the facts of the Study to our combined memberships. By working with local, county and state officials in Ohio, Michigan, Indiana, Pennsylvania and New York, we can expedite action on the recommendations in the Lake Erie Report and also secure designation by the Federal Government of the Lake Erie Basin as a model demonstration area where every known and accepted waste-treatment technology would be used.

You will recall, Mr. Chairman, although I understand there are additional conferees here, that in our last presentation we did make six recommendations.

One of them was the same recommendation which has been repeated by the Public Health Service in both reports, and that is that a minimum requirement of secondary treatment is, without doubt, absolutely essential, and not only in Detroit, but in the areas where we

do not have it, and there ought to be a national standard.

Secondly, we recommend the designation of this Lake Erie Basin as a model demonstration area.

Incidentally, I would like to comment here that after our presentations were made public in the Detroit area, we received many comments from our membership, particularly those who are fishing and boating and swimming enthusiasts, and they say it is very fine that we have all of the scientific information that has been presented by the United States Public Health Service, but they told us that they knew all the time the water was polluted -- they could tell by the way it looked and by the way it smelled, and by the fact that they can't do any more fishing there.

We commend the United States Public Health Service for its painstaking, intensive and well documented study, and we are grateful to the press for its contribution in making the facts of the Study known to the general public. We reiterate our pledge of full support in achieving our mutual objective for clean water in Lake Erie and its tributaries.

We will continue in terms of our program of informing and mobilizing our membership, their families and their friends, to see to it that all the necessary

Olga M. Madar

action is taken in the various municipalities and in the states, to see to it that Lake Erie is not only cleaned up, but kept clean.

Thank you very much, Mr. Chairman.

(Applause.)

(The following is the testimony submitted by International Union, United Automobile Workers, at the Federal Pollution Control Enforcement Conference on Detroit River-Lake Erie Pollution on June 17, 1965:)

Mr. Chairman and Conferees:

I am here today as a representative of the UAW and at the request of Mr. Walter Reuther, President of the United Auto Workers of America.

The UAW has approximately 350,000 members in the area surrounding the Detroit River and Lake Erie. In our activities we have attempted to provide energetic and purposeful leadership in all aspects of the community life, outside as well as inside the auto plants. For many years, the UAW has lent its weight to campaigns for neighborhood conservation, urban renewal, beautification of the city and country, and restoration of water resources. We have urged planning

for the future, for the increased demands that will inevitably be placed on our recreational resources by an area population projected to reach 5 1/2 million by 1980. We have recognized that the pollution of our waters, especially the Michigan waters of Lake Erie, is growing, not lessening. Our 350,000 area members represent nearly 350,000 families, each eager to preserve and expand opportunities for swimming, fishing, and boating. Accordingly, we welcomed the cooperation of the Michigan Water Resources Commission and the U. S. Department of Health, Education, and Welfare in the battle against pollution.

This cooperative effort began on the most solid scientific basis that could be asked: a two-and-a-half year, $750,000 study project. A staff of about 30, with headquarters at the Naval Air Station at Grosse Ile, spent nearly two years studying the River, the Lake, and the wastes pouring into them. Their final report is staggeringly thorough, detailed, and precise. The study project was concluded with the presentation of conclusions and recommendations, each of them fully explained and justified by the scientific findings. I think I can speak for the UAW when I say that we find the report completely convincing.

We in the UAW feel a special responsibility

for leadership in abating pollution which originates in automobile plants or associated industries. But we represent citizens of this area as well as auto workers, and the Public Health Service report prepared for this conference indicates, beyond the possibility of any doubt, that several of our municipal installations also add pollution to these waters. There have been some newspaper stories and statements by individuals which interpret this report as an insult and an affront to Detroit and its municipal government. Such an interpretation is at best a disappointing response to a growing nation-wide concern with protecting water resources, and at worst a cynical tactic to avoid taking the necessary remedial action.

The Chairman of this conference has emphasized that this is not an adversary proceeding. No one is being indicted here, and no orders will be issued. The Public Health Service study and recommendations were made, at Federal expense, at the request of John Swainson, the former Governor of Michigan. The conferees and other participants here today are being given an opportunity to discuss these recommendations, to offer new ones and amend the old ones, and to debate means of abating pollution. To whatever program of action the conferees

adopt that will stop pollution in the Detroit River - Lake Erie complex, the UAW pledges its full support.

Critics of the Public Health Service report have expressed puzzlement that Detroit's existing sewage treatment plant, once considered ultra-modern, should now be termed inadequate. There should be nothing puzzling about this. Detroit's population has multiplied 6 times since 1910. Its industry has grown accordingly, and so, naturally, have its waste discharges. Detroit's supply of water always has and always will remain exactly the same. It should be obvious that, if we discharge increased amounts of wastes into the same quantity of water, more advanced treatment will be required.

The urgent problem of the pollution of Lake Erie presents a separate, equally important reason for the installation of further treatment facilities by the municipalities of the Detroit area. The particular population problem in Lake Erie -- aging -- is not new. It is a problem in which recent technological advances have added to our understanding. We know now that Lake Erie changes every year, becoming more and more like a bog and less and less like a clear lake. We know now the causes of this aging process, and what we can do to slow it down. If nothing else works,

certain types of chemical treatment may render wastes less damaging to the Lake. The Public Health Service recommendation for secondary treatment is, in fact, the minimum and the least expensive means of improving water quality in the Lake.

And I would think it safe to suggest that the most expensive waste treatment that could be designed could not begin to reach the value of Lake Erie merely for industrial and navigation purposes. The recreation value, present and potential of Lake Erie, is beyond all dollar estimates.

The recommendations for further waste treatment in Detroit are in no way a condemnation of the excellent work done until this time by our public water and sewer departments. No more do the recommendations for industrial waste treatment represent a condemnation of Detroit's industries. Many of these plants have exercised initiative and public spirit in providing waste reductions, particularly in new plants. If various interested groups, government and private, now find that both municipal and industrial polluters require some prodding to accelerate their construction of treatment facilities they should not be surprised. Nor should they be alarmed if some of those establishments

asked to make expenditures for treatment facilities do a bit of protesting. It would be a poor businessman who was too anxious to spend his stockholders' money. Similarly, few cautious city officials are eager to commit city funds to new construction without the clearly expressed support of the voters.

That support is almost universal in Detroit. We in the UAW will do our best to see that it is expressed not only here but also in Ohio and Canada. We hope that many other groups of private citizens will join us in making explicit to city and industry officials alike our pleas -- no, our demands -- for clean water in the Detroit River and Lake Erie.

To achieve this, we endorse:

(1) The concept of "stream renewal" urged by a panel at the recent White House Conference on Natural Beauty which would establish a national goal of water beautification similar in scope to urban renewal.

(2) A minimum requirement of secondary treatment in Detroit as well as other municipalities, unless it is demonstrated, without doubt, that less treatment will suffice.

(3) Effective local, State and Federal action to require industry to install adequate systems

to avoid water pollution.

(4) Designation by the Federal Government of the Detroit River - Lake Erie complex as a model demonstration area where every known and accepted waste treatment technology would be used.

(5) Establishment of a national policy which would require industry to provide satisfactory methods of treating waste products resulting from the production of new products.

(6) Increased Federal granted to encourage area-wide pollution control projects.

We call upon the Governors of Ohio and Michigan and the Mayors of Cleveland and Detroit to provide the leadership in soliciting the support of President Lyndon B. Johnson, appropriate Federal agencies, and the involved industries in achieving these objectives. We pledge the fullest support of the UAW.

Attached is a copy of President Johnson's Message on Natural Beauty, with a foreword by Walter P. Reuther, President of the UAW. This brochure is published and distributed by the UAW Recreation Department as a public service.

MR. STEIN: Thank you.

Are there any comments or questions?

Mr. Poston.

MR. POSTON: Thank you, Miss Madar, for an outstanding report. I think you show an understanding of the problems we have, and I think you are to be commended for mobilizing forces to present the facts to the people, for I think this is a most important aspect of accomplishing total pollution control.

MR. STEIN: Thank you.

Miss Madar, another thing you would be interested in knowing, while you referred to the Ohio statute which prohibits the Ohio Department of Health from releasing information on industrial wastes without permission from the industry involved, every Ohio industry which has made a statement here has indicated that it would have no objection to the release of this information.

MISS MADAR: Yes. I was very delighted to see that, by the way.

MR. STEIN: That is, so far. They all haven't been up yet, but so far they are batting 100 per cent.

MISS MADAR: I think you ought to make it

easier for them. We ought to make certain that this information is obtainable here, as well as in other states.

In some respects, until we get some uniformity, there is going to be some unfair competition amongst the states.

MR. STEIN: Right.

MISS MADAR: Certainly, it being required in the other states, it ought to be required in Ohio.

Incidentally, in Michigan, it seems to me that we ought to all get on an equal basis, and everybody would be required to do the same thing, and all of us should be required to do more than in the past.

MR. STEIN: All three of us, Mr. Poole, Mr. Oeming and I, have been connected with the suggested state water pollution control acts.

We recommended one about ten years ago, and it was just revised. The philosophy in that act makes it clear that strict provisions like this are not desirable, and I think all of our names are on that.

I don't know if you want it in the conference record, but I think at least from three conferees here in other capacities, we made our views on state legislation pretty well known.

Olga M. Madar

MISS MADAR: Good, I know you have.

MR. STEIN: Thank you.

Are there any further comments or questions?

(No response.)

MR. STEIN: If not, Dr. Arnold, would you proceed?

Thank you very much, Miss Madar, and thank you for the United Automobile Workers.

DR. ARNOLD: We would like to now call upon the U. S. Steel Corporation for its presentation, which I understand will be made by Mr. Herbert J. Dunsmore.

Mr. Dunsmore.

Herbert J. Dunsmore

STATEMENT OF

HERBERT J. DUNSMORE

ASSISTANT TO ADMINISTRATIVE

VICE PRESIDENT ENGINEERING

UNITED STATES STEEL CORPORATION

MR. DUNSMORE: Most of my remarks will be made with the aid of slides, and it may be more comfortable if the conferees sit in the audience, if they wish. They will be able to see the slides better.

My name is Herbert J. Dunsmore. I am a diplomate of the American Academy of Sanitary Engineers and have worked in public health for twenty-seven years.

My job at United States Steel is the assistant to the administrative vice president of engineering and my responsibilities include the engineering phases of U. S. Steel's water conservation activities.

My report to the Conference today will cover the water conservation and treatment systems of Lorain Works, one of the world's great pipe mills, at Lorain, Ohio; Cuyahoga Works in Cuyahoga Heights, whose wire and strip products are used throughout the world; and Central Furnaces on the Cuyahoga River in Cleveland, producers of merchant iron.

These three plants which requested me to

study their water conservation systems and report for them today, employ more than 11,000 people. It is a distinct privilege for me to appear here today and report for them.

(Slide 1) LORAIN WORKS

Kenneth Thomas, steelworker and fisherman, angles for perch off the Lorain breakwater at the mouth of the Black River in Lake Erie.

Kenneth Thomas, his thousands of co-workers at U. S. Steel's Lorain Works and their families share Lake Erie with some 10 million other people living along its shores.

They swim and fish on Lake Erie and they cruise across the Lake occasionally on weekends.

Lake Erie also plays an essential part in their working lives. They operate one of the world's largest integrated pipe mills. Lake Erie water is used to transport raw materials, cool furnaces, test pipe, power turbo blowers and perform vital functions in many of the steelmaking processes.

(Slide 2)

The iron ore these Hulett unloaders are

Herbert J. Dunsmore

removing from the hold of the Motor Vessel THOMAS at Lorain Works dock crossed Lake Superior, Lake Huron and Lake Erie on its way to Lorain Works blast furnaces.

But navigation is only one of the many ways in which Lake Erie water served our Lorain Works organization.

(Slide 3)

Maintenance men ready a trash interceptor for the rigorous job of taking large logs and branches out of the Black River water on its way into the plant for use in steelmaking.

(Slide 4)

The traveling screens remove leaves, sticks, shale and other debris as the water leaves the Black River for Lorain Works furnaces. The screens also protect Lake Erie game fish.

(Slide 5)

This is the escape trough through which game fish are blocked by the screens and returned to the river to be caught by Kenneth Thomas and his fellow fishermen.

Herbert J. Dunsmore

One interesting aspect of the Lorain Works - Lake Erie relationship bears mention here.

While Lorain draws its water from the Black River every day of the year, during long periods there is little flow from the river above Lorain Works. The levels of the river and lake are such that much of the time the flow is from Lake Erie and the lower reaches of the Black River form a huge reservoir from which Lorain draws and redraws its water again and again.

The principle of reuse has also been practiced to a high degree within the plant and, as we describe the water conservation and treatment systems at Lorain Works, we will highlight many instances in which reuse of water in the plant diminishes the volume of effluent waste water.

A major objective -- not to impair the usefulness of the water we use in making steel at Lorain Works -- has guided the development of Lorain Works' elaborate water conservation and treatment facilities.

We welcome this opportunity to show this Conference how we go about the job of conserving this precious resource that serves all of us in so many ways.

Herbert J. Dunsmore

(COLLECT BLAST FURNACE FLUE

DUST IN FIVE STAGE PROCESS)

(Slide 6)

A hurricane of heated air reduces mountains of ore, coke and limestone into molten iron in Lorain Works' five blast furnaces.

The several thousand tons of molten iron which flow from these furnaces every day find their way into tublar and semi-finished steel products, some of which are for the drills that penetrate the earth in the quest for oil and into the pipe lines that deliver your gasoline.

That same hurricane also blasts fine particles with the gas out of the furnace top into a five-stage network of control devices that keeps this unwanted by-product of ironmaking out of the Black River.

(Slide 7)

This is No. 4 blast furnace and the big diagonal pipe (A) is the "downcomer" that conducts the dust-laden gas stream from the furnace top to that big round tank (B) called the dry dust collector. Here most

of the flue dust particles are deposited by gravity. The captured dust is loaded into hopper cars through a chute at the bottom.

The next stage is the venturi scrubber (C), a high column with a narrow throat where water sprays wash out the finer dust particles that escaped the dry dust catcher. The sprays offer another example of water reuse at Lorain Works. The thousands of gallons used in these sprays have done previous duty to cool the blast furnaces.

In the third tower (D), the aftercooler, the gas stream is sprayed with water again to further reduce dust content before returning to the blast furnace stoves for reuse in the ironmaking process.

(Slide 8)

The dust in the water from the venturi scrubbers on No. 3 and No. 4 blast furnaces is pumped to this 500,000 gallon circular basin called the West clarifier where the dust settles to the bottom as a thick sludge, permitting the clarified water to flow back into the river. The men at the center of the tank have the responsibility for keeping the operation at top efficiency.

Herbert J. Dunsmore

(Slide 9)

Here, Douglas Grayson examines a sample of thick effluent liquid from the venturi as it enters the clarifier.

(Slide 10)

After clarifying, Mr. Grayson samples the effluent water as it leaves the clarifier.

(Slide 11)

Chemist James McCauley analyzes test samples of influent and effluent water from the 700,000 gallon East clarifier at the Lorain Works' main laboratory.

(Slide 12)

This is No. 2 reservoir at Lorain Works which receives effluent water from the East clarifier. After cooling and further settling in this reservoir, the water is ready for reuse in other steelmaking processes.

(USED WATER

GOES TO THE CLEANERS,

RETURNS TO WORK)

(Slide 13)

Reuse takes many forms in Lorain Works' water conservation and treatment systems and the triple duty performed by blast furnace cooling water is an example of this.

This six-acre reservoir provides ample retention time for cooling and settling out solids.

(Slide 14)

This barometric condenser uses over two million gallons of water from No. 2 reservoir daily in condensing steam from the blast furnace power house. It returns the warm water to the filter plant to be treated for its third steelmaking function.

(Slide 16)

The warm water from the barometric condenser comes to the settling tank in the background on its way to the boiler houses.

(Slide 19)

Here is another example of water reuse at Lorain Works. This cooling tower in the center of the

picture takes the condenser cooling water from the bessemer turbo-blowers and cools it for reuse. The seven protruding circular-shaped knobs along the length of the cooling tower anchor seven huge fans that cool the water as it cascades down through the tower.

(KEEPING MILL SCALE
OUT OF THE RIVER)

(Slide 20)

Hot steel oxidizes rapidly and the scale must be removed before it is rolled. High velocity water sprays knocks scale from a hot steel bloom before it enters the rolls on the bar mill. The scale drops into a flume and is sluiced at high velocity into one of three scale settling pits.

(Slide 21)

This concrete cavern is one of three scale pits serving No. 4 blooming mill. At the intake point the water is slowed so that the heavy particles of mill scale will settle rapidly.

(Slide 22)

Foreman Lee McClellan directs cleaning

of the scale pit at the blooming mill.

(Slide 23)

This hopper car loading scale alongside scale pit No. 3 gives an idea of the heavy duty performed by the pit in keeping this foreign material out of the river.

Again, reuse conserves water at Lorain Works. After the scale has been settled out, the water is pumped back to the mill for reuse as sluice water.

(Slide 24)

This is the nine-acre reservoir No. 1 where mill water and condenser water from the bessemer power house cool and settle out the remaining burden of solids for another steelmaking assignment.

(Slide 25)

The testing pump on the No. 3 seamless mill tests large pipe with water up to 3,000 pound pressure per square inch. The test water shown here pouring from a length of 24" diameter pipe is used over and over again -- another water conservation practice at Lorain Works.

(Slide 26)

These are the continuous weld pipe mills that produce U. S. Steel pipe for structural, industrial and domestic use.

(Slide 29)

This is the outfall of No. 3 lagoon at Lorain Works. This lagoon is 16 acres in area and retains 25 million gallons of water.

No. 3 lagoon receives waste water containing oil from the rolling mills, a great deal of furnace cooling water, some scale pit overflow and storm overflow from the Clinton Avenue municipal sewer. The large area and volume of water retained in this reservoir permits the settling out of the solids. A skimmer retains the oil and subsequent cascading of the water further improves the effluent quality before discharge into the Black River. Spent pickle liquor is retained in another small lagoon where the acid is leached out. No spent pickle liquor reaches the river.

(Slide 32)

Lorain Works pumps all of its sanitary

wastes to the municipal sewer system for treatment.

This is one of the 15 power-operated stations for pumping sanitary waste.

Our taxes which helped to build the municipal plant and operate it are, of course, substantial.

(RIVER QUALITY IMPROVEMENT SHOWN)

Now we come to the payoff question. What effect does this intricate water quality control system have on the river?

A significant answer is provided by regular readings taken in the Black River upstream and below Lorain Works outfalls.

They consistently show that Lorain Works water returning to the river, while slightly warmer, is substantially lower in solids than the water coming down the Black River.

(Slide 1) CUYAHOGA WORKS

We now move some fifty miles closer to Cleveland and to the source of water for a much smaller operation and plant -- the Cuyahoga Works.

Water flowing from the Cuyahoga River

into the old Ohio-Erie Canal will be utilized to cool, quench and rinse steel strip and wire processed at U. S. Steel's Cuyahoga Works in Cuyahoga Heights, Ohio.

Here we use a modest allotment of water, when compared to the requirements of an integrated steel mill. This is because the big water users - coke ovens, open hearths and blast furnaces - are not present at Cuyahoga Works.

Cuyahoga's steel comes from other mills to be processed into a variety of highly refined wire and strip products widely used in auto and appliance manufacture, agriculture and countless other American industries.

Ninety-five per cent of the water supplied is used at the hot end of the plant, comprising No. 1 and No. 2 Rod Mills and the hot strip mill. Most of the plant's water pollution abatement installations were designed to serve these facilities.

(Slide 2)

(CONTROLLING HOT MILL WASTES)

Billets shipped to Cuyahoga Works are heated to rolling temperature in the Rod Mill Reheating Furnace and rolled into long rods.

Herbert J. Dunsmore

When heated, the steel surface oxidizes rapidly to form a coating of scale.

Here we see the scale being removed from the red hot billets by water sprays in the Rod Mill; this is where the major element in Cuyahoga Works' water treatment system comes into play.

(Slide 3)

The scale generated in the Rod Mill is flushed through a sluice running the length of the mill into this scale pit. Here the water is slowed down and held long enough for the scale to settle out, permitting the effluent water (relieved of its metal burden) to return to the River. The clam shell bucket is removing scale from the pit.

(Slide 4)

This is what the scale looks like at close range.

(Slide 5)

Here Shelton Tufts is retrieving a water sample from another scale pit - the one that serves the hot strip mill.

Herbert J. Dunsmore

(Slide 6)

And here's what the sample looks like in the Chemical Laboratory; Chemical Analyst William Scott analyzes the sample taken by Shelton Tufts to check the scale-trapping efficiency of the Hot Mill Scale Pit.

(Slide 7)

(KEEPING LUBRICANTS OUT OF THE RIVER)

The control of the lubricant wastes at Cuyahoga Works begins with the skill of our steel workers who are trained and experienced in using numerous types of oils and greases required in steel finishing.

Here Engineer John Garvey checks the automatic lubrication system on the Rod Mill: this system is inspected regularly to insure oil-tight operation.

The equipment presents a problem when a small amount of waste oil escapes into the scale pit cluices. As an additional measure to control this waste oil, engineering designs have been completed for the installation of baffles and skimmers on the scale pits and this equipment will be in operation by the

end of 1965.

(Slide 8)

Recirculation solves the oil problem in Cuyahoga Works' two large cold rolling mills.

This photo shows the filters which permit the recirculation of oil on the Sendzimir Mill which rolls steel strip.

The Cuyahoga Works' steel maker, combining "know how" and good housekeeping with an assist from modern controls, is solving the plant's waste lubricant problem.

(Slide 9)

(SPENT PICKLE LIQUOR)

"Pickling" refers to the immersion of strip, rod, or wire in dilute sulphuric acid by which means the oxide coating which forms after hot rolling is removed.

Here the crane operator lifts coiled rods riding on C-Hooks from the pickling bath.

(Slide 10)

We are minimizing this disposal problem

by slow controlled discharge from this storage tank which is operated under a state permit.

We are continuing to study several methods for solving the remaining waste acid problem and are confident that by mid-1967 this will be solved.

(SANITARY WASTES)

All sanitary wastes at Cuyahoga Works are discharged into the Municipal sewer system for treatment.

(Slide 1) CENTRAL FURNACES

Now let us travel down the Cuyahoga River to Central Furnaces in the City of Cleveland. Here again, a navigable river brings iron ore to our doorstep.

Central Furnaces produces merchant iron and a great deal of the plant's output goes into engine blocks.

Central Furnaces uses about 69,000 gallons of water per minute which is pumped from the Cuyahoga River. Approximately 85% of this intake is used for furnace cooling and turbo-blower condensing. It returns to the river unchanged, except for a slight

temperature increase.

A complex conservation and treatment system has been designed for cleaning the remaining 15% of the water. Developed over the years under the permit system of the Ohio Water Pollution Control Board, it is operated by specialist crews, around the clock, to restore water quality before it returns to the river.

To those who operate and maintain this network of controls, the quality of water returning to the Cuyahoga River is just as important as the quality of the iron that flows from our blast furnaces.

(Slide 2)

This is the newer of the two Central blast furnaces and one of the nation's largest producers of merchant iron.

Preheated air is necessary to produce iron and this is where the blast comes in.

Here, at the top, the dust laden gas is removed for cleaning.

Notice that big pipe flaring down and out from the top of the stack as we turn to the next photo.

(Slide 3)

That "downcomer" pipe, at the right of

the last photo, is seen at top center of this one.

It conducts the gas, laden with tiny particles of raw material, into this dry dust catcher (A) where most of the fine pollutants swirl out of the gas on their own momentum. This vessel is 35 ft. across and 70 ft. deep and deposits 140 tons of dust every day, through a chute at the bottom, to waiting dump trucks.

After the dust catcher, the gas enters this 80-ft. cylinder (B) in which a 2700 gallon per minute shower bath douses the finer dust particles out of the gas stream.

Now we come to the heart of Central Furnaces' water pollution control system. The dust laden water flows from the bottom of the gas washer to the center of the clarifier, and from here, clarified water flows back into the river.

Before we proceed further with the clarifier story, however, we have another gas cleaning operation to cover.

(Slide 4)

Leaving the top of the gas washer, gas flows to three electrostatic precipitators at the center and right in the photo.

Herbert J. Dunsmore

Nine Hundred 8-inch tubes in these precipitators ionize and collect the remaining dust particles, which are too fine to be removed by the preceding equipment.

A continuous film of water carries the dust to a basin where 1,000 gallons a minute is pumped to the clarifier.

(Slide 5)

Now back to the clarifier again where Dave Downs, holding a white porcelain tile for color contrast, inspects the dark effluent from the gas washer as it enters the clarifier.

(Slide 6)

Later, Dave Downs examines the clean effluent water from the clarifier as it flows into the river.

The sludge from "A" thickener is pumped to the "D" Clarifier which is part of a duplicate water pollution abatement system serving the second blast furnace.

(Slide 7)

Dave Downs analyzes a test sample of the

influent water and the clean effluent from "A" Clarifier at the laboratory.

(Slide 8)

Pumped from "D" Clarifier, the sludge forms a dry cake on the seven cloth-surface drums of this Oliver filter.

The filter cake, a mass of fine flue dust containing approximately 27% water, drops through a chute onto a transfer belt, is mixed with ore and delivered to the sinter plant.

(Slide 9)

The slag cooling process has generated a water problem that continues to give us trouble at Central Furnaces. A water spray cools the freshly tapped slag so that it can be loaded into trucks and moved out of the plant.

Most of this water evaporates but a small amount remains.

This problem is being solved by a reduction in the amount of spray water and by preventing access of this water to the river.

Herbert J. Dunsmore

SANITARY WASTE TREATMENT

At Central Furnaces we discharge sanitary wastes into the Cuyahoga River. We have done this under a permit which would have subsequently required us to tie into a proposed interceptor sewer planned for this area by the City. We were in regular contact with the City and had developed plans to segregate and discharge sanitary wastes into the City system as originally planned. However, on November 13, 1964, the City advised us that their original plans had been abandoned and they recommended that our sewage be routed to the existing Broadway sewer. Our engineering is progressing in accordance with the City's new plan and we expect to make this connection by mid-1966.

U. S. Steel wishes to make it abundantly clear that the Ohio State Health Department has our unqualified permission to release to the Public Health Service all information they have regarding the amount and kind of industrial waste being emitted from U.S. Steel facilities in the State of Ohio.

This brings us to the conclusion of our tour through the Lorain, Cuyahoga, and Central Furnaces

Herbert J. Dunsmore

where you saw our water treatment and pollution abatement facilities. We believe you will agree with us that water clarification in steel manufacturing presents substantial and complex problems, and that our company has made great strides in solving these problems. We recognize that the job is not yet finished. We are continuing our research, planning, engineering and the actual construction of corrective devices. United States Steel stands ready to cooperate with every further effort to improve the water quality of Lake Erie and its tributaries.

Thank you.

(Applause.)

MR. STEIN: Thank you, sir, for a very excellent statement.

You know, I was anticipating, Mr. Dunsmore, that you would give us that information, because you had such a full disclosure of your processes that I couldn't imagine you were going to withhold that effluent information.

That was really a very interesting analysis of the steel company processes.

Are there any comments or questions?

MR. POSTON: I was interested, Mr. Dunsmore,

in the type of information that you may have on your industrial wastes, whether you run tests on all of the polluting materials as to quantity and quality, so that a complete analysis of water quality conditions could be made?

I know that the Health Department has indicated that in some cases they do not have ample information from some of the industries to give us a complete evaluation of conditions that we might anticipate in downstream areas.

MR. DUNSMORE: To date we have made all the analyses that we have been requested to make, and submitted them to the State Health Department.

We are willing to make additional analyses, if they deem necessary.

MR. POSTON: And this could be made available to the Public Health Service?

MR. DUNSMORE: Yes, as is indicated in my statement.

MR. POSTON: I think that is ample.

MR. STEIN: Are there any further questions or comments?

(No response.)

MR. STEIN: Thank you very much, Mr. Dunsmore.

Before we start again, I would like to revise the previous announcement I made.

I guess, by looking at us, you can tell our ages. I know that at least three or four of these fellows I have worked with for twenty years, and I think our ages show.

We were a little optomistic when we thought we would meet tonight. When you get to the panel's age, you begin getting testy, and we have decided, in view of the complicated nature of the problem, that it would be the better part of valor to let us digest it overnight, and the conferees will again have a public meeting in the Exhibit Hall. You will see the sign here. If you can find this room, you can find the Exhibit Hall.

That will be at eleven o'clock tomorrow morning.

We will attempt to push on tonight as long as we have to go, so that everyone on Dr. Arnold's list is heard.

Dr. Arnold?

DR. ARNOLD: Mr. Stein, I would like to have entered into the record a statement made to me today by another industry in the Cleveland area.

The Jones & Laughlin Steel Company advised

me today that the Ohio Department of Health has their permission to make known effluent data which we may have.

MR. STEIN: Thank you very much.

Are there any comments or questions?

(No response.)

If not, would you proceed?

DR. ARNOLD: I would now like to extend the courtesy to Mr. Anthony J. Russo, a member of the Ohio House of Representatives, to make a brief statement.

Mr. Russo, of Cuyahoga County.

STATEMENT OF

ANTHONY J. RUSSO

MEMBER

OHIO HOUSE OF REPRESENTATIVES

COLUMBUS, OHIO

MR. RUSSO: Mr. Chairman, Ladies and Gentlemen:

My name is Anthony J. Russo. I am one of the State Representatives from Cuyahoga County.

As Secretary of the Mines and Natural Resources of the State of Ohio, I am fairly familiar with the problems we face.

I would like to compliment all those who took part in the conference. I believe that they have spotlighted a problem -- a problem of real emergency.

However, I think we have been cognizant of this problem for a long time. This problem does not exist only because of industry, but it exists because of human beings and urbanization.

We can't lick this problem here in the State of Ohio by itself. We have got to have help. The only place we can go for help is to the Federal

Government. I believe this is a health problem of an emergency matter, and we have got to look forward to the Federal Government for help.

We in the State of Ohio, of course, have taken some strides in this direction. We have just passed House Bill No. 1, which allows private industry to install water pollution controls, and gives them a tax exemption from real estate, personal property, and sales tax.

This is a loss to the State of Ohio and the taxpayers, but we recognize the problem.

We have to move somewhere in some direction. This is the first step from the State of Ohio.

Pollution itself is not located in Lake Erie alone. We have this problem in the entire State of Ohio.

The present tax structure of the State of Ohio cannot absorb the cost of cleaning up the waterways. The municipalities cannot absorb this cost of the urbanization. You have seen repeatedly that the people have voted down tax increases or bond structures.

The only proper branch is the Federal Government, because they are here through the taxing system, and they can spare this kind of money.

Anthony J. Russo

Now, some estimates have gone from 3 to 7 or 8 billion dollars, and we recognize this. You certainly cannot get this from the people of northern Ohio. You can't get it from the State of Ohio. We have other problems within the State of Ohio which are just as vital.

The next question is, where do we get the money?

Now, we have had reams of reports, and we can't blame industry alone. They are trying. And you can't blame the antiquated laws.

This problem has become an emergency within itself. What about the Lake killing itself off without any human effort? This is a problem, and this is not a problem for the people of the State of Ohio; it is a national problem. Lake Erie is a national and international waterway.

The only way we can start to lick this problem is by huge sums of money. We can't get it from industry. We've got to be realistic. They have stockholders. We can't get it from the public. The public doesn't want any new taxes.

But the Federal Government is geared through the taxing structure, which will enable them

to give huge loans to municipalities that need them, and also give loans to industry on a long-term range, which will then allow them to go into the water pollution control systems.

Water pollution control systems within themselves do not act as an aid to the community, and consequently many companies are reluctant or unable financially to go into solving this problem, and no matter how tough we make the law, are we going to put them out of business? Are we going to tell the communities to stop? Because then we are going to have everybody pack up and leave Cleveland.

Cleveland is an offender. All of the municipalities are. Everybody is, but the only place we can do anything is in the Federal program, and I think that by now the Federal Government should recognize this is an emergency problem, and should take immediate steps.

I don't care what kind of financing they use. We can scream for 100 per cent financing, but they should look at it logically and realize that we are unable to cope with this problem, and give us the necessary help, because whether it is estimated that Lake Erie will last one year or two years or twenty years, we know the danger is there. Everybody is

cognizant of this. The question is, how do we solve it?

There is only one way. We need money, and the only place we can get any money of any consequence is from the Federal Government.

The State of Ohio and the citizens of northern Ohio and Greater Cleveland have contributed handsomely and mightily to the structure of the United States, and I think they owe us this, and they should step into this as an emergency and act accordingly, and give us this right to solve the problem by implementing the loaning of funds to do a proper job, but the only way we can do it is with financing.

Gentlemen, we can go over and over this problem. We can talk about the technical depth of the Lake, we can talk about the chemicals, and we can talk about what the companies are doing. It is just impossible to solve this at a local level.

The problem is here before us. There is only one other level to go to, that of the Federal Government, and I think they owe it to the State of Ohio, they owe it to the people of northern Ohio and to Greater Cleveland, and they should step into this emergency immediately.

Thank you.

Anthony J. Russo

(Applause.)

MR. STEIN: Thank you very much for your statement.

Do we have any comments or questions?

(No response.)

MR. STEIN: If not, thank you very much.

Dr. Arnold?

DR. ARNOLD: For clarification of the record on a question that you brought up regarding the expenditures of the Republic Steel Corporation, Mr. Allen is now prepared to give you the breakdown for this and have it entered into the record.

MR. STEIN: Thank you.

DR. ARNOLD: Mr. Allen.

CONTINUED STATEMENT

OF

HARRY L. ALLEN

MR. STEIN: Mr. Allen, I'm sorry I didn't ask you that question when you were up first, but it inadvertently slipped my mind.

MR. ALLEN: I'm sorry I didn't get back after lunch, but I was trying to catch up with some

paper work that had accumulated.

Would you restate the question?

MR. STEIN: Yes. You indicated in your statement that you had spent $9 million for water quality improvement measures.

I wondered if there was some kind of breakdown as to what kind of devices, or where this $9 million went?

MR. ALLEN: Well, to clarify the record, Mr. Chairman, of the $9 million, $1,800,000 was spent at our two coke plants, of which $900,000 was for the installation of the dephenolizing equipment, and tying the two coke plants together to keep the phenol out of the receiving river.

$875,000 was spent on the benzol plant to put in a waste water quenching system to keep that water from going into the river.

On the sanitary sewage program which we tied into and have been working with, there was $1,600,000 spent at the strip mill. And keep it in mind that our plant here covers some 800 acres of ground.

$2,500,000 was spent at the steel plant, including our Bolt and Nut Division down the river,

our shops and our railroad terminal facilities.

On the matter of scale, $1,650,000 was spent, of which $220,000 was spent for the 12-inch bar mill equipment, and this is improving the equipment that is already there, $560,000 on a 10-inch bar mill where we added a completely new scale oil recovery system, and $875,000 was spent at the strip mill to tie in facilities from the 98-inch hot mill, so that the scale could be deterred from entering into the river at a maximum.

As far as acid reclamation, it cost us $600,000 to modify three continuous pickling lines at the strip mill, in order to discharge the acid into the river on a trickle basis instead of a bubbling basis, and there is another $750,000 which I referred to as an oil reclamation installation that is being installed on the 72-inch coal reducing at our strip mill.

In addition to this, there was as much as $100,000 spent on one septic station in connection with our blast furnaces, and on some of the smaller sampling stations I am sure you are well aware of the expense.

MR. STEIN: Well, I can see the sampling

stations are expensive for private industry as well as Government.

MR. ALLEN: Some of them are.

MR. STEIN: Yes, I recognize that.

The question is, I think, are some of these expenses really designed also to be improved production devices which would necessarily result in lower wastes, or were they just designed as waste treatment facilities?

I listened to those that you mentioned, and it seems that some of them may have had that dual purpose.

MR. ALLEN: No. I think I would like to disagree with that, Mr. Stein.

They are not connected with any increase or modernization of production facilities. We have spent about $200,000,000 in the Cleveland complex in the last ten years, and this $9 million I refer to is a complete separate item of the expense only to improve the problem of effluent discharging into the Cuyahoga River.

We will document it in real detail if you would like it.

MR. STEIN: No. I am glad to have your statement in the record on that.

I don't know that you are disagreeing with me. I asked the question; I didn't make the statement.

But I think you have answered the question, and this was the question, whether that was used for waste treatment.

Mr. Poston?

MR. POSTON: I wondered whether you had any figures on the amount of reduction of pollution to the stream as a result of this expenditure?

MR. ALLEN: Well, I think those figures are probably knowledgeable to the Department of Water Pollution Control in Ohio.

I don't have any with me for the record.

MR. STEIN: I do think, Mr. Allen, that this is a point that I would like to make in general.

I think one of the defects you have in this field is how much money industry has spent and what a job industry has done.

As you well know, there are certain inhibitions, and certain cost figures which are really none of the Government's business.

We are really interested in clean water, but it does seem to me that from what I have heard throughout the country in various water pollution control meetings and in the field, and I do this all the time, that where a company has a record of spending, say, $9 million on purely waste treatment facilities, it might

be worthwhile thinking of giving that a little more publicity and making that generally known.

I think this might help the public have an understanding of what industry is doing and the costs involved. As a matter of fact, I think this is kind of impressive.

MR. ALLEN: I think your point might be well taken.

MR. STEIN: Yes.

MR. ALLEN: Too often it becomes submerged in a mass of figures on other things that seem to be more interesting to the general public.

MR. STEIN: Yes.

MR. ALLEN: More interesting to the people at large.

Thank you.

MR. STEIN: Thank you.

Dr. Arnold?

DR. ARNOLD: Mr. John Pilch, a member of the Cleveland Council, has a statement to make, and also wishes to read into the record a statement prepared by Mr. Henry Sinkiewicz, also a member of the Cleveland City Council, and Chairman of the Water and Air Pollution Committee.

Henry Sinkiewicz

STATEMENT OF

HENRY SINKIEWICZ

READ BY

COUNCILMAN JOHN PILCH

MR. PILCH: Mr. Chairman, Conferees:

This is the statement of Councilman Henry Sinkiewicz, who is the Chairman ot the City of Cleveland Council Committee on Air and Water Pollution.

He presents his apologies, but he expected to speak and he has made commitments for this afternoon with his constituents and he could not wait.

Cleveland has been called the city of committees, with some justification. However, the time for conclusions and tabling of conclusions is past. The past has caught up with our future. The passing of the bison on the great plain, a great natural resource, the loss of the passenger pigeons in their countless millions, are all witness to the everlasting depredation that we and our forebearers condoned. A tragic loss! Yes, indeed, but we are doing the same thing -- even more so!

In the Great Lakes we have something that

is unique in the entire world. And what have we allowed to happen? Through apathy, neglect and downright disinterest, we have allowed it to become a cesspool of industrial wastes. Something that belongs not only to the people of Ohio, but to everyone who loves their country. Why has this pristine purity been destroyed? Because of the apathy and neglect that I have shared with my fellow citizens.

I am, as Chairman of the Air and Water Pollution Committee, not only concerned but frustrated. I am asking for a forward movement -- not on agreement, but on action! And that is "action" in big words!

This requires not only the lip service of industry, not only the empty promises emanating from Columbus, but a program! A program which spells out how far Columbus will share the mutual responsibility, how far we in Cleveland can contribute, and what the Federal Government will do.

The life blood of our communities are the industries that make it possible for our people to be employees, and to bring the pay check home -- the pay check that makes the whole function of government possible. We all rest on the broad base of the pyramid -- the weekly pay check. But also the disburser of the pay check has a responsibility to us all. Without getting

into professional management and its responsibilities to its stockholders, they have a higher responsibility to themselves, unrecognized maybe, but still there. A body can feed on itself, but in so doing destroys itself. Let's not let that happen here. No one likes a prophet of doom! I hate to sound that trumpet. But unless in no uncertain terms we enforce the laws already enacted, we are living in a fool's paradise.

Only you and millions of Ohio residents can prevent this! It affects your pay check and it affects your family's health, but more than that, it destroys something God gave for our sustenance and we wilfully despoiled.

Gentlemen, there are remedies. Let's not make this a seminar to deplore. Let's make it not just a committee, but one that takes a positive stand and then sees that positive action is taken -- not in 1966, not in 1967, but now!

That is the conclusion of the statement by Henry Sinkiewicz.

John Pilch

STATEMENT OF

JOHN PILCH

COUNCILMAN, CITY OF CLEVELAND,

OHIO

MR. PILCH: As for myself, first, I don't claim to be a chemical expert. I don't claim to be a biologist. I don't claim to be an engineer. I am not going to trouble about BOD, MGD, phenols, or what have you. I leave that to people that know.

There is one thing though that does my heart good, and this is a culmination and the beginning of a dream -- the conference here in Cleveland that is being attended by so many important people.

I would just like to give you a brief outline of what we went through in order to accomplish some of the things that all of us thought everybody was becoming aware of in our area.

There was a statement made first by someone the other day, I believe, that it seems that our water pollution problem is caused by public apathy. But I think that it is not only public apathy, but apathy by industry itself, who has to be prodded, and apathy by

the Government itself, which occasionally has to be reminded.

When we first started a little over a year ago in attacking this problem of water pollution in our area, we were greeted by many different types of remarks.

"Pollution? What Pollution?"

"Why, we can go out into the Lake and get a glass of water and drink it right out of the Lake."

I don't know -- you might be able to do it once, but if you tried to do it on a continuous basis, I doubt very much whether you would last long.

"You can't swim in Lake Erie. So what? I don't swim anyway."

But does that mean because I don't swim I have to deprive others of that recreational facility?

"What are you trying to do, make a swimming pool out of the Cuyahoga River?"

We never expected to make a swimming pool out of an industrial river, but what we must remember is that what goes into that river goes out into that Lake, which could possibly be used as a swimming pool.

"It's hard to catch fish in Lake Erie. So what? I don't fish anyway. Besides, I don't like fish."

Well, let me give you a little minor example,

and this I put out as an idea to industry. I remember a time when you could go out into the Lake and catch a mess of fish, bring them home and have them for supper. Fine -- and a lot of people did that. That was the complete sustenance of many families in our area during the depression days. That is something I think we have lost now.

We used to be able to buy pike for 65 cents a pound. Now you buy pike for $1.35 a pound, which in turn raises the cost of living, which in turn means -- maybe it sounds silly, but it means that industry indirectly has to pay an increased cost of living because of something that they feel they have no control or no power over.

"What are you trying to do, drive industry out?" We were told, "What are you boys doing? Do you want to chase all the big steel industries out?"

That I think is something that it is even silly to mention. No one is trying to chase industry out.

But if the Federal Government emphasizes and implements and makes sure that the same water pollution control laws are standard throughout the whole country, and industry has to abide, where are they going

to go if they did want to move? They need water. It is a precious asset. They have to have it to operate. But let's not let them abuse it.

"What are you, a bunch of fanatics or do-gooders? What are you trying to do? What are you trying to prove?"

Well, actually, when you come right down to it, we don't know what we are trying to prove, but we feel that we are trying to do something for our community, for millions of people that depend on a lake for water that they have to have, because, without water, no life. Even grained wheat which has been called the staff of life needs water. We all need it.

Now, when you run into these types of questions, sometimes it becomes discouraging, because you feel, oh, well, what the heck -- let's throw the whole problem up. These types of questions really amaze us, because we have found out that although water pollution was a problem in general that people talked about, that people said, "Well, what is Joe or John, or John Doe there going to do about it?" -- they thought that if they turned their head into their shoulder, the problem disappears, that it won't be there, and it will be non-existent.

John Pilch

When Councilman Sinkiewicz, Councilman Katalinas and myself started out on this pollution problem, one of the other names they used to call us was "The three musketeers."

When we started digging into the problem a little more and started taking trips up the river, then they called us the "Three Rover boys." Then they called us the "Three River Rats." Yet it did not discourage us. We felt that the problem existed.

Now, I understand that some of the conferees took a trip up the river. We took six -- six trips, rainy weather, sunny weather, murky weather, foggy weather, what have you -- you pick it, we took it. If you think the conditions were bad on that trip, you should have been with us on one that we took.

It happened that a big oil boat was helping the tug make a bend, and its big screws were churning up what was on the bottom of that river. From our boat, when we saw the scum, the detergent, the dirt, the filth, and dead rats churned up by this propeller, you know, for two days we had quite a time swallowing a glass of water, believe me.

But the other things that amazed us more was when we found out that the U. S. Army Corps of

Engineers was taking the same scum, filth, dirt and dead rats, and dumping it two miles from our crib in the middle of the Lake where we get our drinking water, we still thought very, very discouragingly of our drinking water.

We tried drinking juice and we tried drinking everything else, but without water, you can't exist.

MR. STEIN: What kind of juice was that, Councilman?

(Laughter.)

MR. PILCH: Orange juice, Ohio's tomato juice.

(Laughter.)

We started asking questions: What is being pumped in the river and the Lake? Everybody had a faint idea that everybody is dumping everything into it, but we would get evasive answers. Nobody would say definitely, "We are throwing this in or that in," but our trip up the river showed what was being dumped -- not chemically, but visually.

Who is doing it? Everybody and nobody.

Why are they allowed to do it? "We have a permit."

What can we do to stop these various actions,

this various dumping that is ruining one of our greatest assets?

If you ever thought of what would happen to this whole community of millions of people -- not only Cleveland -- without Lake Erie at our doorstep, just consider what is going on in the State of New York now. Take a shower, and, if you can get away with it, don't take a shower, Use deodorant. I would prefer to take a bath.

(Laughter.)

But it seemed hard on any of us to get any information. We looked at studies that have been carried on for the past twenty, thirty years, each one in itself concerned that we were wasting, neglecting, abusing and misusing one of our greatest assets, and yet you had to prove to people that this was going on.

Even right now, take this glass of water (indicating). Water, chemically -- on this I know enough about chemistry -- is H_2O, a simple chemical formula. But I would guarantee you that there is a lot more than H_2O in this glass, and there is nobody who has been able to prove that some of the other chemicals, some of the detergents that it is impossible to get out of your water through whatever processes

you may use to purify it -- no one can prove that that in one way or another is not harmful to us as individuals.

We talk about reuses of water. You can ask industry whether or not it is possible for them to take the water where it reaches the mouth of the Cuyahoga River and use that water in their processes, and they will tell you, "No, it has too much of everything in it."

Who put it there? Who knows.

Why are they putting it there? "We have a permit."

We were told that in order to completely eliminate the water pollution problem in Cleveland alone would cost us three quarters of a million dollars.

We asked on what basis they figured that. Well, this would be, if you took the entire city, lifted it up, took out the whole sewer program, put in a complete modern dual system, and then put the city back.

Let's face it -- we know that that is impossible. You couldn't do it. But there are ways and means that we can control, and not only in industry.

We stepped out into the county and into the State. Even today in outlying communities there

are permits being issued for septic tanks, but they must dump directly into a sewer or into an open waterway.

Now, we know that a septic tanks, after aging so far, becomes practically nonexistent. It is supposed to be replaced, or cleaned, or what have you, every so many years. Nobody does it, because it costs too much, and nobody does it because there is nobody there to tell them they must, so we continue with pollution.

Take the average day housewife. As a man in the home, did you ever think that whatever detergents, chemicals, oils, varnishes, paints, fingernail polish remover, and even fingernail polish, that you tossed down into the drain in your home, can come back to you because it may be impossible to remove it from this glass of water? You may be drinking what you are throwing into your drain.

We take a body of water like Lake Erie for granted. It is big. We could never pollute it. It's impossible; it's too big. Yet, we are finding out that in the past ten years, because of what we have been doing with our natural resources, what we need for life itself has accelerated so fast, that all of a sudden everybody is realizing that it is a problem.

John Pilch

Well, we hope everybody is realizing that it is a problem, because we have found out in the past, again, through apathy, what becomes a problem today we forget about, because tomorrow we are going out to play a game of golf, but after you get through with that game of golf and walk into that clubhouse, and have your juice, or beer, or glass of water, remember what may be in it. Then that brings the problem back to you.

We take the Lake for granted, and yet all of us, not only individuals but as groups, industry and the Government itself, allow everything to happen to disturb the natural aging of our waterways in cleansing themselves. We over-use it, or we find that maybe we have been caught, or we are prodded a little bit, and then we do something that is a little bit face-saving in order to sort of pour salve on our wounds, or pour a balm on our conscience.

We ask, is all of this pollution affecting our present intakes at our cribs? Is it affecting the water that comes back to you?

We are told, "No, absolutely not. The water at our intake is checked many times a day."

But we ask one other little question:

What are you going to do the day when you test that water at that intake and you find that you've got other impurities in it that didn't exist before? What are you doing to do now?

The answer? We will just add more chemicals to the water to make sure that the other chemicals that are in there aren't going to hurt you.

We ask the question: Can you guarantee that any of those chemicals you add will not hurt?

Well, no one can do that. You may not be able to tell it -- you may be able to drink that water for ten or twenty years. It may not hurt you, but it may eventually catch up with you in aggravating a condition or causing a condition that may exist when you get old. No one can say that for sure.

I want H_2O, not H_2O plus a lot of other formulas, but H_2O.

We started on these various cruises, on contacting people, and on talking to people, and, as I said, we went through the general routine of do-gooders, and so forth and so on.

We even took pictures of our beautiful, wonderful, and, believe me, colorful river. You can get the colors of the rainbow in it. We had to take

it on color film.

We went to Washington, where we were very warmly received by Mr. Stein and a congressional committee. Nobody prodded us to do this. We felt that this was something that had to be done in order to awaken that apathy. They agreed with us, but the Federal Government said that they could not enter into the picture unless the Governor of the State invited them.

So, through various devious ways and means, back doors, conferences, and so forth and so on, letters that constituents wrote in, we have the culmination in a seminar on our problem here today.

We are glad that in a little way we were able to prod and pinpoint and make people aware of the problem.

Now, we hear industry say that they have received permits to drop these little bits of waste matter into the river. They say, "Well, now, look, what we are putting in is not harming the river." Maybe Joe Doakes is putting something in that he shouldn't, but then we go to Joe Doakes, and he says, "Well, what I am putting in isn't harming the river either."

Then you get somebody else, and he tells you the same thing.

John Pilch

Well, let's take our Lake so that we can envision it just a little more. Let's make it a bathtub full of real nice clear water, something that is a joy to look at.

So I come along and I drop a little drop -- mind you, only one drop -- of black ink into it. Somebody else comes along and drops another drop of black ink into it. The body of water is big enough. It absorbs it. You don't see it.

We are now at a point where we are dropping not one or two, but hundreds of drops, thousands of drops, possibly from every home in the city or the outlying area -- millions of drops of black ink.

When you add all that up, it can't be taken out, so it goes out into that real nice pure lake, and what do we end up with? A fouled up lake, a cesspool.

When are we going to stop putting those buckets and cupfuls and tankfuls, and so forth, of black ink into our water?

I remember as a kid, my dad was able to take me down to the lake for a swim. I was able to fish there too. My youngsters can't.

Possibly, maybe, if we take action now, their youngsters may be able.

John Pilch

We have heard the statement made that nobody died from swimming in polluted water. On one hand, we have people tell us, "Why, it can't be that polluted." On the other hand, we have our Department of Health tell us, "You can't swim in it because it is too darned polluted." You have branches of the Government at two extreme ends, and yet, how can you tell if by some youngster swimming in that polluted water, that polluted lake, and he swallows one or two mouthfuls, that maybe years later he will suffer from some sickness, possibly leukemia? Who can tell? Nobody knows what it is. Possibly cancer -- who can tell? Can you? Can I? No, but it could happen.

Industry needs water, we all know that, and yet it is possible that unless they are checked or controlled, they can be the greatest misusers of water.

I have suggested to the Ohio State Board of Health and to the Federal Government that we issue permits. Give them a permit to dump into our waterways, but use the German system. Fine, you want it dumped? We'll tax you on what you are putting into our waterways, and use that money then to supplement our own water pollution control program.

I know we were down in Columbus on a hearing

on the same thing. One statement amazed me, and it will dwell in my mind for a long time. We were complaining about the fact that not only was Cleveland -- we didn't say Cleveland did not pollute the waters -- but we said not only does Cleveland, but all of the outlying areas also pollute it.

This is the answer we got back: "If we sent you clear streams, you would still pollute them."

Our answer was: "Send us those clear, clean streams, and we'll make sure they go into the Lake the same way," because then we will have an ally, with everybody fighting the problem.

The age of fingerpointing is over. We cannot say that "He is doing it, so why shouldn't we?" We can't say that industry is polluting, but so is the every day individual. We cannot completely blame the city, that they are doing it, when the outlying communities are doing it too.

There is only one way that we are going to be able to lick this problem, and that is by a concerted effort and a definite cooperative plan by all, by every individual, by every form of our government, whether it is the city, the outlying communities, the county, the State, and the Federal Government.

John Pilch

I noticed the other day a statement was made by the representative of the Federal Government that the Federal Government, insofar as it goes, can implement local programs. Yet, when we spent billions of dollars -- billions to send a rocket to Mars to find out whether there is life there, and all of the photos so far have shown that there isn't, because there is no atmosphere and no water, we can certainly spend millions in controlling the problem and conserving our own water supply.

When the Federal Government can spend over a billion dollars on a proposed canal from Lake Erie down to the Ohio River, which is primarily for the purpose of getting more water through that section of our State because there isn't enough there to use -- when they can spend that much money, then maybe we had better spend that much and more in order to save what we have.

I know I seem to be "het" up on this subject. I started on it many years ago, even before I got interested in the Council. One of the points and platforms of my program the first time I ran, and ever since then, has been that water pollution control is a problem, and I am going to do every bit that I can

with my own being, with every breath I take, to protect the water -- for me? No. For the future generations. Too often we pile up problems for our future generations that we should take care of today. They have more than enough problems now. Let's not leave them any more. Let's take care of it today.

We have to let everyone know what the problem is. We also have to let everyone know what they can do to fight it. We know that the American public, the common, everyday, ordinary person, if you give him what the problem is, if you give him what you need in order to correct it, if you give him a positive program, if you give him what you are going to do -- not in 1975 or 1980, but what you are going to do in 1965, 1966 and 1967, they will dig into their pockets and help pay for it.

But, by God, don't expect that man to give you a darned cent until you have a positive program of what you are going to do to eliminate this problem that affects everyone of us.

It may be possible that because the problem is so big and complex, because the various communities cannot get together, we need a regional authority for sewage and water pollution control in our area, to take

in the whole basin that empties into Lake Erie.

That is a suggestion that we passed on both to Columbus and to the Federal Government. We alone in a municipality cannot do it.

We know that it will take money. I just want to add a statement here to the remark I made previously, where the common everyday man is willing to pay.

A program was instituted in St. Louis. Their problem was bad, maybe as bad as ours, maybe worse, or maybe not as bad. They are taking care of their problem. The people realized what could happen, what was happening, and they went along with the program. If they can do it there, we can do it here.

I hope that from this conference we can take steps to save one of our national assets, one of the greatest, one we can't live without.

The State recognizes the problem not only as Cleveland's, but other communities, not only as a problem that we in one locale have to deal with, but it is also a State problem.

To the local government I say, get some positive programs and the people will buy them.

To industry I say, we don't have to go in

there to check what is going into that river from your industrial waste. You know. You take care of it. You have a big asset in water. You can do a lot of your own without prodding to help save it, preserve it, and take care of it.

To the individual all I can say and repeat is, remember, whatever you put into your drain may come back to you in your glass of water.

To the Federal Government, the amount of money that is now allocated towards a problem of this type is not enough. We will need more. If we can spent it for other things, we can spend it for this.

We have a moral obligation as individuals, as groups, as citizens, as members of industry, as a State and as a nation, to do everything and anything we possibly can, in any way, to preserve an asset that has been God-given, and has been misused and abused by us, but I think now is the time to do everything we can to preserve it.

Thank you.

(Applause.)

MR. STEIN: Thank you very much, Councilman, for a complete and vivid statement.

Are there any questions or comments?

(No response.)

MR. STEIN: If not, thank you very much. You have really covered the field.

May we go on, Dr. Arnold?

DR. ARNOLD: We will next hear from Mr. Arvo E. Sundberg of the Conneaut Port Authority.

MR. STEIN: While Mr. Sundberg is coming up, I understand there may have been some confusion.

Tomorrow's meeting will be at eleven o'clock in the morning in the Exhibit Room.

Thank you.

Arvo E. Sundberg

STATEMENT OF

ARVO E. SUNDBERG

CHAIRMAN, CONNEAUT PORT AUTHORITY

CONNEAUT, OHIO

MR. SUNDBERG: Thank you, Chairman Stein and our State Governor James Rhodes, for bringing this meeting about and having the opportunity to attend and state a few comments.

My name is Arvo E. Sundberg, Chairman of the Conneaut Port Authority.

Panel members, ladies and gentlemen:

Our City of Conneaut's interest, along with other city representatives attending this meeting as to the serious lake pollution, is mutual. Our city's population is 15,000, and due to recent merger we are the third largest city areawise in the State of Ohio. Lifelong residents have resided on the lakefront throughout.

We are having our toll as to pollution. A few years back, the commercial fishing industry was a healthy flourishing industry on our lakefront -- 27 fish tugs with employment of 200 at its peak -- now

4 tugs and barely hanging on; when blue pike and whitefish started dropping off some ten years ago, everyone was up in arms stating that the commercial fisheries were fishing the lake out, and now, after extensive and timely studies which are being presented here, we can clearly see who and what the culprit is.

We should, everyone of us here, be thankful for these studies that have been and are being made on these pollution problems. Yes, differences and criticism will come about, but from the series of meetings -- Detroit, Cleveland, Buffalo -- there is no doubt in my mind that sound guidelines and positive programs of action will be forthcoming.

On our lakefront, algae also is an ever growing problem. Yet we should feel that is in our area, that our pollution problems are not as serious as they are in the large metropolitan lakefront cities. This is why we laud these reports and guidelines we want to maintain what we have and find ways to improve our lakefront area.

Let me point out a few plus factors:

Our swimming beaches, even inside the breakwalls, have never been closed due to unhealthy conditions, with a bacteria count below average. As

we stated, algae is the Number 1 nuisance.

We are enjoying a gradual increase in good fishing and good fish in our Conneaut Creek within our city limits. This season it is at its peak of what the growth has been up to now. We have northern pike, trout, perch, and so forth. These recreations we want to protect.

Gentlemen, we do hope that future reports by the State and Federal Government will state about our large, safe, sandy swimming beaches, boating and fishing facilities. We noticed in the report that the State had and the Federal Government had, when these studies are made, they should stop by, and not just check the map and check the former report, but we would like to show what we do have, because we are proud of it.

This report may differ with other reports, but we want to show up a little positive and hopeful side to this problem. There are reasons for these present prevailing pollution conditions. One is due to population and industrial growth. The main reason for improvement in Conneaut is that we complied with and accepted the State of Ohio's urgent request some ten years ago to build a modern sewage plant. Our

leaders informed us, and we as citizens responded and passed the proposed levy.

These three days that I have been here and the reports indicate that some cities and industries are dragging their feet. They have had ample time and notice and should accept their guilt for being contributors to our Lake's pollution.

We in Conneaut are yet able to enjoy our Lake, and I am sure that we all could if we all accept our responsibilities.

Our sewage plant is a primary plant. The city has not been notified yet, and from these meetings, as to secondary treatment, but we are presently using our intermediate treatment facilities, which consist of chemical precipitation.

We now have plans in advanced development stages for an 1100 boat marina, covering 64 acres.

I would like to say something as far as the press is concerned. In our little town over here, we get the Cleveland Plain Dealer. I would like to see whether there is a little positive side shown, and not all negative. I don't think our Lake is a dead lake yet. We know we have a serious problem, and that is what we are all here for.

Arvo E. Sundberg

We see cartoons in the paper of a youngster going on the beach, and it shows a big black lake and he can't go into the water. Well, that is true in some areas, but it is not true throughout the Lake. We have Cedar Point and different places where there are wonderful beaches.

We say polluted, yes, but presently I don't think it is as poisonous throughout the Lake as many cartoons indicate.

In our town, which has been for years a good vacation and tourist town, we note that there is a steep drop in that tourist trade due to the bigger papers or the newspapers with large circulations that go into inland towns, and who wants to come up to a lake where it is set up as a big poisonous lake?

In my layman way of analyzing the serious pollution problem, it makes me think that it is similar to a dangerous cancer problem. The growth has been here for some time, but we have not been able to properly detect it. When that remark was made not too many years ago that the commercial fishermen took the fish out, we didn't have the answer, but gradually we are finding out what the answers are.

Now before us solutions are being recommended,

and we should, as the Governor stated, take action.

Mr. Chairman, from this conference we seek the following advice to help us with our present and future planning, and a more secure program as to our Lake Erie's problems.

We ask the Federal and Stage agencies to place us on their mailing lists and forward recommendations and data that we can study and put into effect.

We seek suggestions on proper legislation our city should enact as to pollution appointments or boards to work and fit into the State and Federal pollution boards.

We are presently having a comprehensive regional study in our City of Conneaut. That is a $34,000 study that is presently under way. We have very good potentials for sound growth, but we also want sound planning.

I want to believe and to look with an optomistic viewpoint into the near future along with the Chairman of this conference panel, Mr. Murray Stein, who stated that an improving upturn can come about within the coming few years. And we want to assure the Governor of our State, James A. Rhodes, on his request here Monday encouraging coordination and

cooperation, this we pledge.

My personal firm belief is that local, State and Federal cooperation and participation will be the most effective way to fight this pollution problem. Our city water plant was built in 1935 under the Federal CWA program. I am no engineer about it in any way, but we are proud of our water plant, and with our population now of 15,000, that could be very easily doubled, and then some, without too serious cost. The outlook is very good.

We have low water rates and can easily expand. In 1964, our industrial park was completed with 50 per cent grant moneys under the Federal ARA Act, which also provided major trunk sewer and water lines into the west end of the town.

We are hoping to see this pollution problem worked along the same level, with local, State, and Federal participation.

Thank you.

(Applause.)

MR. STEIN: Thank you, sir, for a very positive and optomistic statement.

Are there any comments or questions?

(No response.)

MR. STEIN: If not, thank you very much.

Doctor, would you go on?

DR. ARNOLD: We will next hear from Mr. William B. Henry of the Cuyahoga County Regional Planning Commission.

MR. KAUFMAN: Mr. Henry unfortunately had to leave, and I will take his place.

MR. STEIN: Come right up.

STATEMENT OF

STEPHEN A. KAUFMAN

DEPUTY DIRECTOR

REGIONAL PLANNING COMMISSION

CLEVELAND, OHIO

MR. KAUFMAN: My name is Stephen A. Kaufman. I am Deputy Director in charge of regional planning for the Regional Planning Commission of Cuyahoga County.

Mr. Stein and Gentlemen:

The Regional Planning Commission of Cuyahoga County has been deeply interested in the problems of sanitation and pollution since its establishment in 1947. In fact, its first special committees were concerned with this general problem and prepared a report in January, 1949, which recommended that a Regional Sewer Agency or Authority, be set up to finance and administer the necessary improvements to sewerage and drainage facilities of Cuyahoga County and the surrounding areas. Our efforts to establish such an agency resulted in the passage of the Regional Sewer and Water District Law in 1949 by the State Legislature. Efforts to implement the law in the Cuyahoga County

area were proceeding slowly but steadily when a County Charter Commission was created and the attempt to adopt a charter used this need as a major issue. In the defeat of the charter, the regional sewer agency issue also lost its force.

Our next project was to secure the passage by the voters of Cuyahoga County of a one-half million dollar bond issue for the preparation of a Regional Sewer and Water Plan. The issue was approved in 1951 and the plan work, assigned to various official and consulting engineering offices, mostly in Cleveland, was completed in December of 1957.

In the course of its creation, a complete set of sewer maps of the county was prepared. The plan consists of a series of reports, as well as detailed maps, sections and other documents. A report on the expansion of the Cleveland Water System was prepared by Havens & Emerson. Another report on Design Standards for Sewers and Drainage Facilities was prepared by Rollin F. MacDowell & Associates (W. A. Schade & Associates, successor).

Sewer plans for the various drainage areas of the County and its neighbors were prepared by the MacDowell firm and its successor, and also by the County

Sanitary Engineer, the City of Cleveland, and the F. A. Pease Engineering Company. These were reviewed and consolidated into the final Sewerage & Drainage Report by Albright & Friel, Inc., of Philadelphia, Pennsylvania.

It included a number of specific recommendations totaling over one hundred million dollars, together with a number of other proposals for improvements to be undertaken after further engineering study. The former were oriented mainly to serving the newly urbanizing areas.

A plan to finance these projects through a Regional Sewer & Water District was developed by the New York municipal finance consulting firm of Wainwright and Ramsey, Inc. Copies of the plan were given to all municipalities in the area, as well as County and State officials and interested civic leaders, and I have a copy here to leave with the conferees.

The original drawings are in the keeping of the County Sanitary Engineer.

The plan for a metropolitan sewerage and drainage system has guided the development of most of the projects now underway and has already saved the people of Cuyahoga County many millions of dollars by indicating more economical ways to handle sewerage

and drainage problems. It has become, more or less, "the Bible" for sewerage development in the metropolitan area. In fact, all applications for Federal Aid are reviewed as to their conformity to the plan by our office before submission to the Department of Health, Education, and Welfare. These studies were all undertaken and completed with funds furnished by the County of Cuyahoga and the municipal members of the Regional Planning Commission.

In July, 1961, assisted by a grant from the Housing and Home Finance Agency, the Regional Planning Commission issued a special report on pollution on the lakefront, one of a series on all aspects of the lakefront by our own staff. It called for, among other things, further engineering studies as a first step in clearing up many of the basic problems which this current Federal study has reemphasized.

At the recommendation of the State, the City of Cleveland is now embarking on a comprehensive study of the combined sewer problem, a step we urged most strongly in that report. This is just one example of our interest.

We are very pleased that at last the larger units of government are showing such concern,

and are hopeful that action will now be forthcoming to solve these problems.

Recommendation

A great deal of basic information based on past studies and effective plans is already available. We recommend, therefore, any further studies should be in the form of expanding and updating the present plans, and with the definite purpose of implementing plans and recommendations from this point on.

(Document entitled "Regional Planning Commission, Cleveland - Cuyahoga County - Ohio, Sewer and Water Plan, Sanitary Sewerage and Storm Drainage," has been filed with the Division of Water Supply and Pollution Control, Department of Health, Education, and Welfare, Washington, D. C.)

MR. STEIN: Thank you very much for your statement.

Are there any comments or questions?

(No response.)

If not, thank you very much, sir.

Dr. Arnold?

John W. Talbert, Jr.

DR. ARNOLD: Mr. John Talbert, First Vice President of the Ohio Division of the Izaak Walton League of America.

STATEMENT OF

JOHN W. TALBERT, JR.

FIRST VICE PRESIDENT, OHIO DIVISION

IZAAK WALTON LEAGUE OF AMERICA

EAST CLEVELAND, OHIO

MR. TALBERT: Mr. Chairman:

I am John W. Talbert, Jr., First Vice President of the Ohio Division of the Izaak Walton League of America. The League is a nationwide organization of citizens dedicated to the wise and proper use of America's natural resources.

It may be of some interest to you to know that the League, at the behest of President Hoover, in 1927 conducted the first nationwide survey of water pollution in the United States. Mr. Hoover at the time was Secretary of Commerce and the Honorary President of the League. The League was then but five years old but throughout its life has had an active and intense interest in water pollution abatement.

"A river is more than an amenity. It is a treasure. It offers the necessity of life that must be rationed wisely among those who have power over it ...."

John W. Talbert, Jr.

These are the words spoken by Supreme Court Justice Oliver Wendell Holmes in a 1931 decision involving the use and diversion of the Delaware River. These words are more meaningful and appropriate to us today as we convene for this important conference.

According to Webster, pollution is the act of making or rendering unclean. I'm sure there is no question in the minds of those present that Lake Erie is a polluted body of water. Therefore, I do not propose to belabor you with statistics to prove that point. We are here to correct the problem which we know exists.

Collectively, citizens must form into groups to take corrective steps at the local level--and vote the necessary funds to pay for them. Existing local industries contributing to pollution must be induced, by one means or another, to recycle their waste and clean it up. New industries must comply with local regulations before commencing operations. Housing developers must not be allowed to leave bare areas of soil unprotected for unreasonable lengths of time. Individual home owners who empty their wastes into septic tanks must be forced to keep their septic tanks functioning correctly. New sanitary sewers and storm sewers must be separate units.

Farmers must put into effect good conservation measures to protect their soil against erosion--either from wind or rain. Pond owners must seed their dams with grass--again to prevent erosion. Detergents must be replaced by bio-degradable washing compounds. Use of insecticides and fertilizers must be regulated and controlled--if not by local ordinance, then surely by individual stewardship.

Again, collectively, we must stress the gravity of individual abuses--for the individual's contribution of waste materials to our water resources, when multiplied by the entire population, may well exceed that of a single offending industry.

You--the local citizen--must pay more than lip service to the cause of pollution control. Every time you throw an empty gum wrapper on the sidewalk or highway (from where it will eventually enter a body of water), you are polluting. Any time a farmer applies chemical fertilizer to his crops and then, through lack of soil conservation measures, permits the fertilizer to wash off his land in escaping silt, he is polluting. The car owner who washes down his oily garage floor, without first removing the oil with absorbent materials, is polluting. No one has the right to pollute. An awareness of what constitutes pollution--even in its smallest

aspects--is an elementary step toward effecting its control.

The proposed New York State budget figure for anti-pollution was $1,700,000,000. What is Ohio's?

A good characterization of an American would show him standing knee-deep in sewage--shooting rockets at the moon!

There is little doubt the most important subject in connection with this conference is the health of the vast number of people who daily drink and wash in such waters as those under discussion. The Izaak Walton League of America feels it is extremely important that these waters be given far more protection for this reason alone. However, there are many additional benefits to be gained from clean water for industrial, recreational and other uses. It is definitely time all concerned exert a major effort to restore these waters to a high degree of purity for the benefits which it will return in the health, welfare and economic well-being of everyone.

The League believes the American people possess the ability, ingenuity, energy and wealth to abate pollution by all means possible. Certainly it is fully as important to devise a new type of sewage treatment plant which has an efficiency rating approaching

the 100% level as it is to land a man on the moon!

Also, much more practical application should be made of knowledge presently available in order to achieve a higher degree of pollution abatement.

The Izaak Walton League of America is honored to be able to appear before you and it calls upon you to take immediate steps to rectify the various sources of water pollution mentioned above as well as a multitude of others much too lengthy to be included herein.

Thank you very much.

MR. STEIN: Thank you very much.

(Applause.)

MR. STEIN: I can tell you that the Izaak Walton League has been one of the foremost agencies working for pollution control at all levels of government, and they were instrumental in getting our legislation passed and setting us up as a Federal agency. We are very glad to have had you here.

Are there any comments or questions?

(No response.)

MR. STEIN: If not, Dr. Arnold?

DR. ARNOLD: Mr. George Watkins, Lake Erie Watershed Conservation Foundation.

George H. Watkins

STATEMENT OF

GEORGE H. WATKINS

EXECUTIVE DIRECTOR

LAKE ERIE WATERSHED CONSERVATION FOUNDATION

CLEVELAND, OHIO

MR. WATKINS: Mr. Chairman, Conferees, Ladies and Gentlemen:

My name is George H. Watkins. I am Executive Director of the Lake Erie Watershed Conservation Foundation.

The Lake Erie Watershed Conservation Foundation is an organization dedicated to sound water management today and for the long term. The organization believes that public education is an integral part of sound water management and it is in this field that the organization functions.

We appreciate the opportunity to appear at this conference and hope our thoughts will be a constructive addition to the material presented. I might say that our approach is a little different, and I hope that even at this late date in the conference something new might be said.

George H. Watkins

Sound water management deals with more than just pollution control. I think it important that the participants in this conference be reminded of this, lest their enthusiasm for action in this one area limit their capabilities to act in other equally important areas of water management.

The most important aspect of water management is supply. Without it there would be no cause for this conference because there could be no pollution.

Perhaps second is the use of water -- the most beneficial use -- beneficial to the whole population of an area, on a net basis. That is, using water first for the most important uses, such as domestic supply, second for the next most important, and so on. Dr. Tarzwell of the Public Health Service emphasized the importance of water use in his interesting and informative discussion on the definition of pollution.

Third in importance most people would place the avoidance of disasters. In this category of water management comes:

1. Protection from floods.
2. Overcoming droughts.
3. Pollution control -- particularly the safeguarding of domestic water supply.

And fourth, under ultimate conditions of choice are the less essential uses.

The Lake Erie watershed of Ohio with sound water management practices can continue to have all of these water uses, not in every part of every stream and perhaps not in every part of Lake Erie, but available within the area.

Corrections to water management problems are not effected overnight. In general whether supply problems, flood problems, pollution problems or other water management problems, the solutions require examination of many alternatives all in the context, not of today but of conditions that will exist 10, 15, 20, or 50 years from now. If you think I exaggerate, here are three examples:

A) The water supply which the City of Akron enjoys today was planned in 1911. That is over 50 years ago!

B) In 1959, Cleveland, among other Lake Erie Watershed cities, was devastated by floods. Many of you have forgotten that time. Planning and engineering studies have been underway since then to protect Cleveland from a repetition of this

disaster. If the Federal Government, various local governments and the people of this area vote the money, a flood control project on the Cuyahoga may be completed by 1972. That will be 13 years of work -- planning, engineering, design, education -- education to get the funds -- finally construction, and with it protection.

C) Pollution is in fact news to many people in this area. But it is not to those charged with responsibility to control it. In 1951, for example, the Ohio Department of Natural Resources, Division of Water made and published a very comprehensive study of water quality in Lake Erie and its tributaries. In 1957, as Mr. Kaufman just mentioned, the Regional Planning Commission made a study and drew up plans for area-wide sewage facilities, including storm water sewers. Currently the Public Health Service, under the able direction of Mr. Northington, is conducting a comprehensive survey of Lake Erie.

I cite these, out of many possible examples, to show that there is a tedious job of problem identification, data collections, evaluation of costs, versus needs, which has been going on over the long term.

Then you say, why doesn't anything happen? Why don't we clean up the pollution? Sometimes the necessary planning is not adequately done. For this there is no excuse. Sometimes attitudes change more quickly than new plans to deal with such change can be brought to fruition. This may be the case with some of the pollution problems being dealt with at this conference.

In the space of about a year, there has been created a public awareness that is now demanding action. This awareness has caught up with those far-sighted public officials and industrial leaders who have for many years been conducting the battle against water pollution. The area's awakening needs and desires will determine what is economic and what is practical.

There are sound examples of what can be done. The needs and desires on the Ohio River were aroused many years ago and an interstate compact formed -- ORSANCO it is called. It has been sensitive to the needs of that basin. Working with and through pollution control authorities of the States on the Ohio River, and

with representation from the Public Health Service, it has been a model of self determination, self policing and progress by people of an area who wanted to clean up their fouled river. Here is a home grown product of Southern Ohio which we in the north, if necessary, might well adopt.

In conclusion then, the Lake Erie Watershed Conservation Foundation hopes that as a result of this conference three important things will happen:

A) On the local level -- and this has been suggested by several previous speakers, Mr. Yark of Toledo, Dr. Tarzwell of the Public Health Service, the Ohio Pollution Control Board, Mayor Locher this morning, and just now Mr. Talbert -- the creation of officially recognized local river basin groups representative of the area interests - industrial, municipal, recreational, etc., who can determine water uses for various sections of streams and lakes of the basin, develop a priority for those uses, adopt criteria of water quality at every point of use consistent with the uses agreed upon, establish

George H. Watkins

monitoring of water quality, and assist the Ohio Pollution Control Board in its enforcement of compliance.

B) On the State level, a renewed sense of real accomplishment by State pollution control personnel which will fire their determination to continue their durther efforts to abate pollution.

C) On the Great Lakes level, a determination on the part of the Great Lakes States -- and I say this at least was suggested by two other speakers -- which already are joined in a Great Lakes Commission, to proceed as rapidly as possible to obtain Congressional ratification of this compact, so that this already existing organization can be the agency through which the States and the citizens of the Great Lakes Basin may find the solutions to any future interstate pollution problems of the Great Lakes.

Thank you.

(Applause.)

MR. STEIN: Are there any comments or questions?

George H. Watkins

MR. OEMING: I have a question.

MR. STEIN: Mr. Oeming.

MR. OEMING: Mr. Watkins, is your agency in any position to give this conference or the conferees here some suggestions or guidance on how to attack this problem of siltation resulting from land wash?

Is this a function that your agency would be interested in pursuing?

MR. WATKINS: I think probably the United States Department of Agriculture would be the appropriate body, or the State departments concerned.

That is a technical problem you speak of.

MR. OEMING: This isn't something that enters into your water management functions?

MR. WATKINS: We are interested in siltation control, yes, but not technically competent.

MR. OEMING: I see. All right, thank you.

MR. STEIN: Are there any further comments or questions?

(No response.)

MR. STEIN: If not, Dr. Arnold?

DR. ARNOLD: Next we have Mr. Verne Harris, League of Ohio Sportsmen, and also representing the National Wildlife Federation.

Verne L. Harris

STATEMENT OF

VERNE L. HARRIS

LEAGUE OF OHIO SPORTSMEN

and

NATIONAL WILDLIFE FEDERATION

MR. HARRIS: Mr. Chairman, members of the panel, Ladies and Gentlemen:

When I first came to this meeting, there were a lot more than fifty people, and most of the people interested have left us. I hope this is not a criterion of what is going to happen with this setup.

My name is Verne L. Harris. I am from the Cleveland area. I am past President of the Northern Ohio Fish and Game Association, the Woods and Waters, and the League of Ohio Sportsmen. I represent here today the League of Ohio Sportsmen and the National Wildlife Federation. We are here today to seek action in stopping pollution.

Governor Rhodes has stated that "Time for study, re-stury, and study; the studies have passed," and I hope that is true.

We have established the fact that gross

pollution exists in Lake Erie. Are these studies final or are there more to come?

Our fishery resource and other recreational benefits are endangered.

The facts must be faced! I am a former resident of Michigan and a present land owner in that State. The pollution materials entering Lake Erie through the Detroit River are mainly responsible for pollution in western Lake Erie. Obviously, this interstate pollution must be dealt with through our interstate agencies working together.

There are also international problems. Where is Canada? Canada should be present at this meeting. The League of Ohio Sportsmen and the National Wildlife Federation recognize that Canada must be considered in any overall solution.

No agency, no organization, no person has clean hands in this matter of pollution. A recent syndicated column enumerates several sources of pollution by Federal installations. Of course, State institutions and cities are also guilty.

Solutions require money! But why should this frighten us? We are spending billions of our tax dollars to get to the moon. Additional billions are

being spent by our Government in other nations throughout the world, for economic developments on facilities similar to those needed right here in Ohio. It is time that we meet our obligations at home -- in our own streams and lakes, in our municipalities and in our industries.

Mayors, councilmen, and boards of directors of corporations must present the problem to their people.

I want to quote just a few figures to show you what the cities in Ohio are paying for water pollution and sewage collection.

Cincinnati pays $32.59, Youngstown $25.20, Toledo pays $22.75, Dayton pays $17.12, Canton pays $16.75, Columbus pays $28.75, Akron pays $26.30, and Cleveland pays $6.00.

The people must accept the responsibility by providing the funds. We find money for everything else -- why not pollution control?

Action must be taken now to save this valuable resource. Otherwise, people of my age will see fishing and other recreational opportunities vanish from our sight. We are denying these benefits that you and I have engaged in to our future generations.

No red-blooded American ever runs away from his problems. He solves them, and we can solve

this one.

Thank you.

(Applause.)

MR. STEIN: Thank you, Mr. Harris.

Are there any comments or questions?

Mr. Morr.

MR. MORR: Those figures that you cited, Mr. Harris, sound like the annual yield per sewer connection in the municipalities cited in Ohio, and sound very much like those we have had brought before our Ohio Pollution Control Board.

Is that what those were, the annual yield per sewer connection?

MR. HARRIS: That is what we claim is being spent to alleviate pollution.

MR. MORR: Yes. Thank you.

MR. STEIN: Are there any further comments or questions?

(No response.)

MR. STEIN: If not, thank you very much.

Dr. Arnold, will you continue?

DR. ARNOLD: Mr. Morr has a communication he would like to read into the record.

MR. STEIN: Yes. Go right ahead, Mr. Morr.

MR. MORR: Mr. Chairman and Conferees:

I would like to have the record show that the Ohio conferees are in receipt of a communication from The Ohio Conservation Congress, dated August 3, 1965, and I quote for the record:

"This Organization pledges its wholehearted support in any manner possible, to help fight the pollution problem in the waters of the State of Ohio.

"Yours in conservation, Lee M. McClurg, Cuyahoga County Director, The Ohio Conservation Congress."

MR. STEIN: Thank you, Mr. Morr.

Is there any comment on that?

(No response.)

MR. STEIN: If not, Dr. Arnold, will you proceed?

DR. ARNOLD: Mrs. Howard Moore, League of Women Voters of Ohio and Lake Erie Basin Committee.

STATEMENT OF

MRS. HOWARD MOORE

LEAGUE OF WOMEN VOTERS OF OHIO

AND THE

LAKE ERIE BASIN COMMITTEE

OF LEAGUES IN

MICHIGAN, INDIANA, OHIO,

PENNSYLVANIA, AND NEW YORK

MRS. MOORE: My name is Mrs. Howard Moore. I am a member of the Board of Directors of the League of Women Voters of Ohio and Chairman of the Lake Erie Basin Committee of Leagues in Michigan, Indiana, Ohio, Pennsylvania, and New York.

We welcome the opportunity Governor Rhodes has given us to speak today. Our members are deeply concerned about the effects of municipal and industrial pollution on Lake Erie and its tributaries and on everyone living in the basin. We know we are not alone in this concern.

We are glad this conference has been called. It focuses public attention on the problems and the ways to deal with them. It requires the conferees to determine the nature and extent of this pollution and come up with positive steps to deal with it. It backs up these

steps with definite procedures to insure their accomplishment.

We do not speak to you as professionals. We speak to you as citizens who have taken a long, hard look at the situation and are greatly distressed by what we find. Our members have observed conditions, they have gone to look at the streams and the Lake, have visited water supply and waste treatment facilities, have talked with representatives of government and industry and professions and other organizations, have attended and conducted all sorts of meetings, have read reports, articles and newspapers, listened to the radio, watched TV, and have discussed what they learned with each other.

We think we have a stake in what happens to Lake Erie and its tributaries. We think we have a responsibility along with others who use these waters, and with our government officials who are charged with responsibilities for them, to take care of this resource which is so vital to everyone's health and well-being, to our industries and jobs, and to our leisure time and surroundings.

For the past two years our Lake Erie Basin Committee, representing 70 Leagues in the Basin, the great majority of which are in Ohio, Michigan and Indiana,

Mrs. Howard Moore

has been inquiring into Lake Erie pollution as part of our national program on water resources which dates back to 1956. Our preliminary report issued in the Fall of 1964 showed many alarming facts about the deterioration of the waters of Lake Erie and tributaries despite considerable effort and expense on the part of many localities and industries and the states to control pollution. These facts are borne out and further substantiated by the report of the U. S. Public Health Service to this conference.

From every part of the basin, the story is one of waterways polluted with insufficiently treated municipal and industrial wastes; of harbors and navigation channels clogged with silt and sediments. This is particularly true in the Toledo-Maumee area; it is also true in the Cleveland-Cuyahoga area. In some places water supply intakes are threatened; some have been abandoned because of pollution. This has already occurred on the Detroit River. As water quality deteriorates, the costs of providing suitable drinking water increase. Offensive taste and odor problems recur with regularity in drinking water taken from the Maumee River. A company making soup from Ohio's highly valued tomatoes has had to interrupt processing at times for this reason.

Mrs. Howard Moore

A trip down the Cuyahoga River from Kent to the mouth dramatically reveals the progressive degradation of one stream and its surroundings. It is cluttered with litter, foam floats down stream, its banks have been turned into dumps, it smells, it bubbles, the water is discolored, oil floats on the surface and has sometimes caught fire. And these are only the things that can be seen and smelled! When we consider what people and their refuse have done to this stream - and know the same is true of many of the other streams - it takes little imagination to guess that such massive accumulations of waste have an undesirable effect on their destination, Lake Erie. Commercial fishing in Lake Erie is declining. Water based recreational activities are curtailed along large stretches of Lake Erie's shoreline from Detroit to Buffalo. Bathing beaches are closed because they are considered to be a health hazard by officials responsible. Algae and dead fish and debris floating in the water and washing ashore and creating smelly, messy nuisances are reported by summer cottage owners from the western islands to the eastern end of the lake; by vacationers swimming and boating; by operators of tourist facilities. The value of shorefront recreational property is declining.

Mrs. Howard Moore

The signs of pollution are widespread and many and varied. Most alarming of all, the quality of the lake itself is deteriorating. We can no longer take for granted its capacity to purify itself of the domestic and industrial wastes we are pouring into it. We have already largely destroyed our streams for other purposes by using them primarily as waste carriers. The onslaught on the lake has begun. What can we do to halt and reverse these trends?

We need more and better treatment plants. If people understood the limitations of primary treatment, we think they would make the effort to get better treatment. We need better ways to help large cities and their surrounding urban sprawl deal with the difficult problems of collecting and treating their wastes. We need more and better treatment of industrial wastes. We know this is difficult and expensive because of the variety of wastes and their resistance to economical treatment, and also because expenses incurred increase cost of operation but don't contribute to profits. We need better means for local jurisdictions and for states to handle things jointly. Joint programs can be more effective and economical whether we are talking about region or sewer districts or interstate compacts. We need more and

better enforcement of regulations regarding treatment and disposal of wastes, whether from municipal sources, industrial sources, just plain littering, refuse, or from ships and pleasure boats. We need vigorous enforcement by local jurisdictions, by state and interstate agencies, and by federal agencies where they are responsible.

But most of all we need positive goals backed up by the public as well as by officials. Otherwise conditions will become unbearable, especially around our rapidly growing metropolitan areas. We need as a goal the reduction of pollution to make the multiple use and reuse of the basin's water possible. Using rivers and lakes primarily for waste disposal is not satisfactory today. Perhaps it was all right when people lived far apart and industries were smaller and the water could purify itself. This is no longer true. There is no doubt that people want cleaner water for public supply, for recreational purposes and for general environmental enhancement. They also want to continue to be able to buy and enjoy the products of today's industry.

The League of Women Voters has long favored abatement of pollution for more reasons than health. We think it is the cheapest way to make water available for other necessary and desired uses. We think improvement

will require the best possible efforts at all levels of government and by the general public. We think localities and states have a very important place in these efforts. We think the federal government has, too. We do not regard the federal government as the antagonist of localities and states, but rather as their ally, and the public's too.

In a variety of ways Leagues in the Lake Erie Basin are trying to help clean up our water. Many local Leagues have or are working for improved municipal treatment in their communities. Ohio Leagues have begun a study to determine whether their state's pollution control program needs strengthening and how. New York State Leagues are campaigning for the billion dollar bond issue for waste treatment facilities to be voted on by the people of New York in November. Michigan Leagues will present their views on what should be done to clean up pollution in their part of the Lake Erie Basin to the Michigan Water Resources Commission in August. I have already mentioned our five-state Lake Erie Basin group. League members in the Cleveland-Akron Metropolitan Area have just formed an inter-League group to prepare them to work for improvements in that region. League members in the basin cooperated with other organizations and

representatives of industry and professions in a seminar for community leaders on land and water use in Cleveland last March, conducted by the League of Women Voters Education Fund, and are participating in follow-up schools for citizens in their communities.

In the Lake Erie Basin, as in other parts of the U.S., industrial growth and the population explosion have combined to transform water pollution from a nuisance to a menace. Not only is it destroying the pleasure we derive from water but it threatens continued progress and growth of our cities and industries. Taft Center research scientists report that streams and rivers in the U.S. are getting twice as much pollution from municipal sewers - which includes wastes from industries which are able to discharge to them - as they did ten years ago in 1955. If pollution from municipal sewer systems has increased so greatly in this ten year period, there seems little reason to doubt that the same is the case with pollution from industrial wastes discharged directly to streams and lakes.

We have no reasons to be complacent here in the Lake Erie Basin. Even if a lot has been done and a lot is being done to abate pollution, much more needs to be done NOW. We all need to get on with the job.

Mrs. Howard Moore

Thank you.

(Applause.)

MR. STEIN: Thank you, Mrs. Moore.

You know, we really can't live without the League of Women Voters.

MRS. MOORE: It's nice of you to say that.

MR. STEIN: It is true.

Are there any comments or questions?

(No response.)

MR. STEIN: If not, Dr. Arnold, will you go on?

DR. ARNOLD: We will next call on Mr. David Blaushild, of Cleveland.

David Blaushild

STATEMENT OF

DAVID BLAUSHILD

CLEVELAND, OHIO

MR. BLAUSHILD: Mr. Chairman:

I am David Blaushild, and I come here as a citizen. I thank you for inviting me to this most important meeting, and wish to make it clear that I am voicing the sentiments of hundreds of thousands of cynical, disillusioned residents of Northern Ohio, weary of the banalities and lethargy of our public officials in their attitudes towards the crucial problem of water pollution, and weary too of the negative, snide, condescending attitude of some of our major industries who keep wantonly infecting our waters, at the complete expense of an ever-angering public.

If I can only convey to you here that in taking positive actions, you will have the support of an almost total community, that you will be supported vigorously, vocally, and with total enthusiasm, I will have then done my job.

If I can dissuade you from having more surveys and more meetings and to get on with the task

of ending this very obvious pollution problem, I will have done my job.

Assembled here in this room are enough brains, technical skill, power, and knowledge to correct this acute, very obvious problem. What a horrible disgrace, what a frightful shame, what a waste that your talents are being sheathed and hampered by the fetters of surveys, political machinations and selfish interests. Let us hope that from this meeting will come a positive course of constructive action.

Let us forget political differences and regional rivalries. Now is the time for statesmanship of the highest order. In your hands and ability lies the future of Lake Erie. You will have the public behind you, the newspapers, the TV and radio media. All want action. For God's sake, let's get to work, and do not let the traditional enemies of conservation and pollution stop or stall you.

It has been charged that the public is apathetic about this problem. Let me say this: If there is apathy, it is because the public has been lulled into apathy by an endless round of meetings and surveys, that always seem to lead to more of the same.

I think that most of our civil and political

servants are men of good intent, conscientious, sincere, and trying to do their best, but I find no rational excuse for the few gifted with a scientific knowledge and great education that could so vastly benefit the public interest in this critical area, who choose to prostitute themselves by hypnotizing the people by half-truths and trivia for the benefit of a few.

Over 33 communities, Mr. Chairman, representing well over two million people, have sent resolutions addressed to the Governor of Ohio and the United States Secretary of Health, Education, and Welfare, protesting the pollution of Lake Erie.

In addition to exercising grave concern over the damage and loss which has already been suffered from the unabated pollution of Lake Erie, Section 4 of many of these resolutions reads as follows, and I quote:

> "The U. S. Secretary of Health and Welfare, the Governor and Attorney General of the State of Ohio are hereby respectfully urged, to immediately enforce the present laws for the prevention and prohibition of pollution into the waters of the State of Ohio."

Some of the groups and city councils that

had passed this resolution, according to the reports I have received, were as follows: The City of Cleveland, Northfield, Bay Village, Wickliffe, Shaker Heights, Cuyahoga Falls, Maple Heights, Port Clinton, Mayfield Village, Kellys Island, Madison Township, Lyndhurst, South Euclid, Ashtabula, Richmond, Brooklyn, Parma Heights, Sandusky, East Cleveland, Lakewood, Cleveland Heights, Bratenahl, North Olmstead, Willowick Rocky Giver, Fairview Park, Mayfield Heights, and Bedford.

Gentlemen, is this apathy, or is it pressure from indignant citizens to bring this action about from all of these councils. And what, with all respect, brought this fine meeting here together, if it wasn't the prodding and the recognition of an aroused public?

I am submitting, Mr. Chairman, a copy of this resolution for your record.

In addition to this overwhelming request from the communities of Northern Ohio, I would like to submit to you, Mr. Chairman, petitions and letters from over 200,000 citizens, that read as follows:

"To: James A. Rhodes, Governor of the State of Ohio, and Anthony Celebrezze, U. S. Secretary of Health, Education, and Welfare.

"Honorable Sirs:

David Blaushild

"We, the undersigned, citizens of the State of Ohio, are appalled at the official neglect of one of the State's greatest assets, Lake Erie; and are deeply concerned that through the practices of certain industries and municipalities, this great lake rapidly is becoming a modern dead sea.

"We hereby petition you, through a gubernatorial and Federal dictate, to command the Attorney General of the State of Ohio to enforce those laws presently enacted against pollution by:

"1. Insisting that the law directors of various communities bring suit against industries guilty of polluting the waters and

"2. Taking remedial steps forthwith to see that all municipalities build proper filtration plants and other means to prevent the continual pollution of the Lake itself and streams and rivers feeding into the Lake.

"We urge that this action be taken without delay, for the benefit of present and future generations whose health and welfare depend on a clean and wholesome Lake

Erie."

Mr. Chairman, this collection of these signatures and letters was done without any organization whatsoever, a purely "grass roots" endeavor. With proper organization, millions of signatures could have easily been obtained.

I give these petitions to you, Mr. Chairman, with the blessing and hopes of 200,000 people, who want their God-given heritage of clean waters given back to them -- people who cannot, and will not, accept the statements that this shameful degradation of our beaches and lakes and streams is necessary -- people who are getting very impatient -- people who will support you in any constructive, positive action this worthy assemblage may deem necessary -- people who want to know by what right does an industry or community have to haphazardly endanger their health and pleasures by infecting public waters -- people who want to know the constitutionality of the right of the State of Ohio to grant licenses to pollute, in direct violation of the pollution laws -- people who want to know why this deplorable condition is allowed to persist -- people who want to know why there is such a noticeable lack of statesmen who are willing to point the finger of guilt at the offenders

and take punitive action -- people who question the right of any industry to spill any waste into any public waterway, and keep the nature, quantity and contents of materials secret from the public, who own and use these waters without any knowledge of how these ingredients affect their health and welfare.

This could very easily be the most important meeting ever held in Cleveland. Every major city in the world has been located on water. Unless something is done now, it can come to pass that the lake that made Cleveland and Toledo the great cities they are, will, in its own death, destroy its destroyers.

Gentlemen, we have had our full of reading of reports and endless meetings -- reports that wind up covered with dust.

Gentlemen, we await your actions. Let us pray that you act wisely and speedily.

Thank you very much.

(Applause.)

MR. STEIN: Dave, I would have taken your word that you didn't have an organization without your demonstrating your filing system.

(Laughter.)

Well, I guess we are going to have to gather

some of these up, but I would hope that you would wait for questions and comments, and not go off.

Are there any questions or comments?

(No response.)

MR. STEIN: I might say that I am aware of the resolutions that you sent to the Secretary, because I got them all to answer. We were aware of what you were doing and certainly heard from you and your congressional delegation and City Council.

As Councilman Pilch has pointed out, again we have to recognize one thing, and I ask the citizens here to recognize this with us.

It is all well and good to say, "Let's act, no further studies, no further surveys."

As you know, we want action, but, as far as I can see, we have to have intelligent action, and intelligent action requires a measure of planning, and it requires as much planning in our field as I suspect is required in the General Motors factory to get out a new model of the Chevrolet and determine how to market it. We can't go ahead willy-nilly.

What I suggest is to think in terms of surveys and studies and plans, and see how they are directed. I wouldn't have all the citizens' groups reacting against

all planning and surveys, because as the information here is developing, I suspect in specific details, there will have to be some data gathered, judgments made, and plans made, before we can assure that the Lake is cleared up, that pollution is cleared up, and we are spending the taxpayer's money wisely.

I would hope we could come to that kind of agreement.

Are there any further comments or questions?

(No response.)

MR. STEIN: If not, let's see if we can get those cleared up.

MR. BLAUSHILD: May I give you these for the record? Can we have all the letters in the record?

MR. STEIN: No. That is a fast ruling. We will be glad to make the letters available in the files. We have to keep the record down to a reasonable size.

I think you have made your point, Mr. Blaushild. We might be able to get some secondary treatment and chlorination with the money it would cost us to print these in the record, but we certainly are impressed with the outpouring of sentiment of the people here.

David Blaushild

Again, as I pointed out, I think we have recognized in city after city throughout the country these days, as reflected in bond issues as well as campaigns such as this, that the people are ready for pollution control, and I think in many cases they are ahead of the public officials.

MR. BLAUSHILD: This is the point I have tried to make.

MR. STEIN: Yes.

MR. BLAUSHILD: Thank you very much.

MR. STEIN: Well, thank you very much.

May we move ahead, Dr. Arnold?

DR. ARNOLD: Mr. George Flick, of Cleveland.

(No response.)

DR. ARNOLD: Reverend Andrew W. Smith, of Cleveland.

1 Reverend Andrew W. Smith

STATEMENT OF

REVEREND ANDREW W. SMITH

PASTOR, FRIEDENS UNITED

CHURCH OF CHRIST

CLEVELAND, OHIO

August 5, 1965

REVEREND SMITH:

Mr. Chairman, Conferees, Ladies and Gentlemen:

My interests in this conference are fourfold. First, my church is located in close proximity to the Cuyahoga River Basin, specifically just up the hill from Republic Steel. Second, many of our men work in industries located in the basin area. Third, the Ohio Conference of the United Church of Christ is part owner of a Conference Center on Lake Erie near Dunkirk, N.Y. Fourth, living where I do, I am appalled at the extent of air and water pollution in our area.

It would appear that most men in policy-making positions in municipalities and industrial corporations are also associated with religious institutions. Many such men are in responsible positions in the life

of their church or synagogue, on the congregational and/or denominational level. Such men are making significant contributions - financially and in terms of time and talent - to religious affairs. This is known today as Stewardship, the rallying cry of the religious community's renewed concern over the responsibility of the laity, both in the religious institution and in the world.

It would also appear, however, from what we have heard here the past few days, that when municipal and corporate decisions are made or policy is set (at least in the area of waste disposal), a different system of values is applied by such men. The use made in the past by municipalities and corporations of Lake Erie and its tributaries can hardly be classified as good stewardship.

One major Biblical view of man, applied in Jewish and Christian Theology, holds that in creation, God gave man responsibility for the world around him. Man is given dominion over everything God has created. In the garden-of-Eden account, Adam is put in the garden to till it and keep it. The theme continues through the Bible, as when the people of Israel crossed over into Jordan into the land which God had given them.

If what we have heard the past few days

is correct, here is one more case where man has been irresponsible, as was Adam, and as man has been ever since. Apparently, we have turned a great natural resource into a disaster area. We have received dominion and our instinct seems to be to destroy.

What is so tragic about our pollution predicament is that it could have been avoided. How can men show such responsibility and stewardship in their private lives, and yet in their municipal or corporate lives submerge themselves and their private natures in organizational self-interest and irresponsibility toward the world around them?

The fact that today responsibility is felt and the need to end pollution is seen, gives us a high sense of relief. The fact that municipalities and corporations are finally spending the money and taking the care to clean their wastes is a cause for joy. But again institutional irresponsibility reasserts itself. For now we see the state, the cities, and the corporations involved patting themselves on the back over their recent gains in pollution control, blissfully ignoring both the mess they made of the lake and its tributaries and the high level of pollution which still exists.

Reverend Andrew W. Smith

The result for a man who privately is a responsible individual, a good steward, but who publically participates in this organizational irresponsibility can be one of two things. Either he is torn apart inside by such ambivalence, or he must do some fancy pirouetting around the ethical issues involved in the destruction of a natural resource. We have heard many justifications of municipal and corporate policy with which we can sympathize; but the lake is still polluted, and until now (and hopefully no longer) we have skirted the responsibilities God gave us for our world.

Thank you.

(Applause.)

MR. STEIN: Thank you.

Are there any comments or questions of Mr. Smith?

(No response.)

MR. STEIN: Thank you very much, sir.

Dr. Arnold?

DR. ARNOLD: Harriet Roth Parsons, Attorney, representing a group to preserve Chagrin River and Lake Erie.

Harriet Roth Parsons

STATEMENT OF

HARRIET ROTH PARSONS

ATTORNEY

WILLOUGHBY, OHIO

MISS PARSONS: Mr. Chairman, Ladies and Gentlemen:

Our Chagrin River has been left out, and since we are so polluted, we want to be included in this meeting, so I will read to you this letter.

"Federal Pollution Conferees

"Dear Sirs:

"The present problem of the Cleveland Electric Illuminating Company's dumping fly ash into a large flood plain district of the Chagrin River in Eastlake, Ohio, is a serious one. This material has a large sulphur content created by pyrites. No tests have ascertained the potassium or percentage of free potash. It is a well known fact that fly ash gets in the gills of the fish and kills them.

The August 1st issue of the Cleveland Plain Dealer has a full-color picture with the following quotes: 'Power plant discharges rust colored

waste water at the mouth of the Chagrin River in Eastlake.'

"There has been no willingness on the part of the Cleveland Electric Illuminating Company or the present executive officials of Eastlake, Ohio to discuss this dual discharge with the people interested in clean water, clean air, clean land, natural beauty, and above all, the recreational values of boating, fishing, swimming and future park development.

"No amount of coverage in top soil proposed by Cleveland Electric Illuminating Company could eliminate the leeching of acids from this fly ash into the river and lake. This valley is legally termed, 'Flood District,' and a very deep annual flood with loss of life, as evidenced by newspaper articles during the past twenty-five or more years covers it. No percolation tests have ever been taken, and the area involved is lower than surrounding areas, and many pockets are lower than the river itself.

"The damage to fish, boats, hulls, homes, wildlife and beaches from this contamination could be calculated in millions of dollars of loss over a not too long period.

"For the preservation of clean water,

conservation of wildlife and enforcement of present laws, we ask the State of Ohio, U. S. Federal Government and executives of Eastlake, Ohio to cause the Cleveland Electric Illuminating Company to cease and desist from dumping fly ash in the Chagrin Valley and from polluting the lake and river from any other causes whatsoever.

"If the Cleveland Electric Illuminating Company does not desist from polluting the Chagrin River and Lake Erie, the $3,500,000 Federal proposal of the United States engineers for flood control in the Chagrin Valley would waste the taxpayers' money. This area, then, could not be used for the proposed $3,000,000 boat and marine area.

"We remain a committee for the 'Preservation of the Chagrin River and Lake Erie.'

"E. D. Connor

"Chairman and Adviser to the Lake County Metropolitan Park System.

"Harriet Parsons (Attorney)."

I thank you.

MR. STEIN: Thank you very much for your statement.

Are there any comments or questions?

(No response.)

MR. STEIN: I do believe the Chagrin River was covered in the State report.

MISS PARSONS: I have been here since the beginning, and I am here at the last, and I haven't heard it.

MR. STEIN: I believe Mr. Eagle read that. This is included in the section of the State of Ohio report on Pages 17 to 19.

As a matter of fact, when you began talking about that, the name so stuck in my mind, and I was sitting here with Mr. Oeming, and I knew right where to turn and see it.

MISS PARSONS: You don't mind this additional information?

MR. STEIN: No. We love to have it.

MISS PARSONS: Thank you.

MR. STEIN: But you can be assured that the problems in the Chagrin River will be considered in the report.

Now, in addition to that, are you talking about the Cleveland Electric Illuminating Company at Eastlake?

MISS PARSONS: Yes, I am.

MR. STEIN: The Federal report also mentions

that company, and it also indicates that they have to have necessary action, which is solids reduction, which is pretty close to your recommendation.

MISS PARSONS: Good.

MR. STEIN: So you can be assured that this has been covered in both the Federal and the State reports, and will be given full and due consideration by the conferees.

MISS PARSONS: All right. When I go home tonight, I don't want to find the fly ash at my front door then.

MR. STEIN: You want light when you flick your switch, don't you?

MISS PARSONS: Yes, but I can tell you another story too -- not here -- I'll meet you later.

(Laughter.)

MR. STEIN: Dr. Arnold?

DR. ARNOLD: Mr. John Garner, Lake County Sanitary Engineers.

STATEMENT OF

JOHN J. GARNER

LAKE COUNTY SANITARY ENGINEERS

PAINESVILLE, OHIO

MR. GARNER: Gentlemen of this conference:

My name is John Garner, and I am County Sanitary Engineer for the Lake County Sanitary Engineers.

I am not going to take up your time this afternoon by making any comments on the technical aspects of whether Lake Erie is polluted or not, or what technical measures must be taken to correct or improve the condition of the Lake. Personally, I am satisfied that the condition of Lake Erie does leave something to be desired.

In addition to such items as BOD, dissolved oxygen, solids, bacteria, soluble phosphates or algae, I would suggest that this conference also consider the relationship between the pollution of Lake Erie and people, or rather the lack of people.

If Lake Erie is polluted, it is because people have made it so. It is people who use household bathroom and kitchen facilities; it is people who manage

industries, who are employed by these industries, who purchase the products manufactured by these industries; and it is people who obtain the profit from this industrial activity. Certainly, it is these people who will pay for any measures that are taken to control the pollution of Lake Erie.

If the condition of Lake Erie is to be improved, it will be people who will improve it. It will be sewer system maintenance personnel, waste water plant operators, system managers, and State water pollution control personnel that will stop the pollution of Lake Erie, with the cooperation of the general public.

I suggest to this conference that if water pollution control in the Lake Erie Watershed has been neglected, it has been because the subject of water pollution control personnel has been neglected.

In his opening statement to the conference, Governor Rhodes asked that things be laid on the line. This conference should lay it on the line to the Governor and to all other public officials, that if they want to control water pollution, they must:

1. Eliminate partisan politics in the employment of water pollution control

personnel; and

2. They must attract more and better personnel to the water pollution control field through better salaries and other fringe benefits, and provide the necessary training for this personnel.

There is a desperate need, at least in Ohio, at all levels of government, for more engineers, chemists, biologists, bacteriologists, operators and maintenance personnel. Yet elected officials refuse to recognize this need and refuse to provide the budgets and staffs necessary for an effective water pollution control program.

It is ridiculous that men responsible for the operation of waste water treatment plants that easily cost a million dollars or more should earn less than a pipe fitter in a factory, a bricklayer, a carpenter, or almost any other trade that you care to mention.

As you gentlemen know, the effective operation of a waste water treatment plant requires personnel that possess more than an 8th grade education, and in many cases more than a high school education. Yet, under existing conditions, it is almost impossible to attract men of the desired caliber to this profession.

John J. Garner

If a recommendation of this conference will be secondary treatment plants along Lake Erie and more effective operation of the plants that are in existence, then more qualified personnel are needed.

As bad as the local government situation is, I feel that in some respects the State situation is even worse.

In the past, the crux of water pollution control has been the State water pollution control organizations. Yet these organizations are so understaffed that it is nearly impossible for them to perform their functions of guidance, leadership, and enforcement.

This deficiency is not the fault of the men in these departments, most of whom are dedicated public servants and are acutely aware of the problems facing them.

I suggest that the blame for this deficiency lies with present and past administrations and legislatures who have refused to recognize the problem and have refused to provide the means by which this problem might be solved.

Therefore, I suggest to this conference that one of its conclusions or recommendations be that a prompt and vigorous program be started on all levels

of government to provide more effective water pollution control program, by providing adequate budgets and attracting the personnel necessary to do the job, because, gentlemen, without the personnel, you have no program.

Gentlemen, thank you for your time and consideration of this statement.

(Applause.)

MR. STEIN: Thank you very much.

Are there any comments or questions?

(No response.)

MR. STEIN: If not, thank you.

Dr. Arnold?

DR. ARNOLD: Mr. Stein, this concludes our presentation.

MR. STEIN: We didn't do so badly, did we?

We will have an announcement tomorrow at eleven o'clock in the Exhibit Room, which is to my right.

We stand recessed until eleven o'clock tomorrow morning.

(Whereupon, at 5:35 p.m., an adjournment was taken until Friday, August 6, 1965, at 11:00 a.m.)

FRIDAY, AUGUST 6, 1965

1:40 P.M.

MR. STEIN: May we reconvene?

Someone once said we had the best job in the world being able to make a living listening to all kinds of stories.

As you can appreciate, this did take a little longer than the eleven o'clock we first announced. We have a very, very complicated problem, but we did receive unanimity from the three States present, Michigan, Indiana and Ohio, and the Federal Government. We do not have the conferees from New York or Pennsylvania. New York and Pennsylvania did not participate in the deliberations, but the conferees who are present here with the Federal Government have completed a unanimous report, and I think this is indeed very, very encouraging.

We somewhat underestimated the gestation of the report, because we didn't recognize perhaps the size or the complexity or the present views that we had to overcome.

I personally would like to say, as Chairman of the conference, that we had a tremendous discussion.

Closing Statement - Mr. Stein

There was give and take in the best possible democratic manner, and the conference recommendations and conclusions represent the best views we can come up with, consistent with the problems, State by State, and I think in no respect compromising with the principle of clean waters for the American people.

I would like to read the recommendations and conclusions of the conferees.

1. The waters of Lake Erie within the United States are interstate waters within the meaning of section 8 of the Federal Water Pollution Control Act. The waters of Lake Erie within the United States and its tributaries covered by the Cleveland session of this conference are navigable waters within the meaning of section 8 of the Federal Water Pollution Control Act.

2. Lake Erie and its tributaries are polluted. The main body of the Lake has deteriorated in quality at a rate many times greater than its normal aging processes, due to inputs of wastes resulting from the activities of man.

3. Identified pollutants contributing to damages to water uses in Lake Erie are sewage and industrial wastes, oils, silts, sediment, floating solids and nutrients (phosphates and nitrates). Enrichment

of Lake Erie, caused by man-made contributions of nutrient materials, is proceeding at an alarming rate. Pollution in Lake Erie and its tributaries causes significant damage to recreation, commercial fishing, sport fishing, navigation, water supply, and esthetic values.

4. Eutrophication or over-fertilization of Lake Erie and the Maumee River is of major concern. Problems are occurring along the lake shoreline and at some water intakes from algal growths stimulated by nutrients. Algal growths can be controlled, and eutrophication of Lake Erie can be retarded and perhaps even reversed by reducing one or more nutrients below the level required for extensive growth.

5. Many sources of waste discharge in the area still have inadequate waste treatment facilities. The delays in controlling the pollution problem of the area covered by the Cleveland session of the conference are caused by the lack of such adequate facilities and the complex municipal, industrial and biological nature of the problem.

6. Interstate pollution of Lake Erie exists. Discharges into Lake Erie and its tributaries from various sources are endangering the health or welfare of persons in states other than those in which such discharges

originate. In large measure this pollution is caused by nutrients which over-fertilize the Lake. This pollution is subject to abatement under the Federal Water Pollution Control Act.

7. Pollution of navigable waters subject to abatement under the Federal Water Pollution Control Act is occurring in the Ohio waters of Lake Erie and its tributaries. The discharges causing and contributing to the pollution come from various municipal and industrial sources, from garbage, debris, and land runoff.

8. Pollution of the Ohio waters of Lake Erie and its tributaries within the State of Ohio endangers health and welfare.

9. Municipal wastes be given secondary treatment or treatment of such nature as to effectuate the maximum reduction of BOD and phosphates as well as other deleterious substances.

10. Secondary treatment plants be so designed and operated as to maximize the removal of phosphates.

11. Disinfection of municipal waste effluents be practiced in a manner that will maintain coliform concentrations not to exceed 5,000 organisms per 100 ml at water supply intakes, and not to exceed 1,000 organisms per 100 ml where and when the receiving waters in proximity

to the discharge point are used for recreational purposes involving bodily contact.

12. All new sewerage facilities be designed to prevent the necessity of bypassing untreated wastes.

13. Combined storm and sanitary sewers be prohibited in all newly-developed urban areas, and eliminated in existing areas wherever feasible. Existing combined sewer systems be patrolled and flow-regulating structures adjusted to convey the maximum practicable amount of combined flows to and through treatment plants.

14. Program to be developed to prevent accidental spills of waste materials to Lake Erie and its tributaries. In-plant surveys with the purpose of preventing accidents are recommended.

15. Unusual increases in waste output and accidental spills to be reported immediately to the appropriate State agency.

16. Disposal of garbage, trash, and other deleterious refuse in Lake Erie or its tributaries be prohibited and existing dumps along river banks and shores of the Lake be removed.

17. Industrial plants improve practices for the segregation and treatment of waste to effect the maximum reductions of the following:

a. Acids and alkalies

b. Oil and tarry substances

c. Phenolic compounds and organic chemicals that contribute to taste and odor problems

d. Ammonia and other nitrogenous substances

e. Phosphorus compounds

f. Suspended material

g. Toxic and highly-colored wastes

h. Oxygen-demanding substances

i. Excessive heat

j. Foam-producing discharges

k. Other wastes which detract from recreational uses, esthetic enjoyment, or other beneficial uses of the waters.

18. The Michigan Water Resources Commission, the Indiana Stream Pollution Control Board, and the Ohio Water Pollution Control Board undertake action to insure that industrial plants discharging wastes into waters of Lake Erie and its tributaries within their respective jurisdictions institute programs of sampling their effluents to provide necessary information about waste outputs. Such sampling shall be conducted at such locations and with such frequency as to yield statistically

reliable values of all waste outputs and to show their variations. Analyses to be so reported are to include where applicable: pH, oil, tarry residues, phenolics, ammonia, total nitrogen, cyanide, toxic materials, total biochemical oxygen demand, and all other substances listed in the preceding paragraph.

19. Waste results be reported in terms of both concentrations and load rates. Such information will be maintained in open files by the State agencies for all those having a legitimate interest in the information.

20. The Department of Health, Education, and Welfare establish water pollution surveillance stations at appropriate locations on Lake Erie. Surveillance of the tributaries will be the primary responsibility of the States. The Department of Health, Education, and Welfare will assist the States at such times as requested.

21. Within six months after the issuance of this Summary, the State water pollution control agencies concerned will present a schedule of remedial action to the conferees for their consideration and evaluation.

22. The Federal conferee recommends the following for the consideration of the State agencies:

Closing Statement - Mr. Stein

a. Recommended remedial treatment. Completion of plans and specifications August 1966, completion of financing February 1967, construction started August 1967, construction completed January 1, 1969, chlorination of effluents May 15, 1966, provision of stand-by and emergency equipment to prevent interruptions in operation of municipal treatment plants August 1966, patrolling of combined sewer systems immediately

b. Discontinuance of garbage and trash dumping into waters immediately

c. Industrial waste treatment facilities to be completed and in operation by January 1, 1969.

23. Federal installations waste treatment facilities to be completed and in operation by August of 1966.

24. Representatives of the United States Corps of Engineers meet with the conferees, develop and put into action a satisfactory program for disposal of

dredged material in Lake Erie and its tributaries which will satisfactorily protect water quality. Such a program is to be developed within six months after the issuance of this summary and effectuated as soon as possible thereafter.

25. The conference may be reconvened on the call of the Chairman.

26. These conclusions will be re-evaluated after the material at the Buffalo session of the conference is presented.

At this time I would like to express my appreciation to all of the conferees -- Mr. Oeming of Michigan, Mr. Poston of the Public Health Service, Mr. Poole of Indiana, Dr. Arnold and Mr. Eagle of Ohio.

I would also like to express my appreciation to all those of you who have stayed with us through the long days of deliberation. The evaluation of the material was indeed a difficult and exhausting task, and I hope we have arrived at conclusions and recommendations which will move the program forward.

My opinion is that this conference has been one of the most successful we have held throughout the country. I believe we have a practical orderly program for moving ahead with the protection of Lake Erie, towards

preserving a clean water supply, and putting us in a position to at least arrest the pollution of the Lake, and hopefully see our way clear to reversing the trend of degradation.

MR. OEMING: I have a question.

MR. STEIN: Mr. Oeming.

MR. OEMING: Mr. Chairman, when you delivered Item 22, I believe you, under "a" mentioned "recommended remedial treatment." Did you misspeak, or wasn't that supposed to be "recommended municipal treatment"?

MR. STEIN: I hope I said "municipal treatment," but sometimes I make a mistake, because I am always thinking of remedies, but it should be "recommended municipal treatment."

MR. OEMING: Yes, sir.

MR. POSTON: On Page 3, No. 11, the third line, you left out the word "public." It should read "organisms per 100 ml at public water supply intakes."

MR. STEIN: Yes, that should be "at public water supply intakes." I left it out because it was left out of the hectograph copy, but I think all the conferees will acquiesce that we agreed on that.

I would suggest that anyone here having a copy make that correction. Item 11, on Page 3, third

line, should read "at public water supply intakes."

Thank you very much.

MR. OEMING: Mr. Stein, there is one more point that I want to clarify. In Item 22 a, that is "construction completed January 1, 1969"; is that correct?

MR. STEIN: Yes.

MR. OEMING: 1969?

MR. STEIN: Yes.

MR. OEMING: All right.

MR. STEIN: If there are no further comments or suggestions, for the conferees, thank you again.

We stand adjourned.

(Whereupon, at 2:00 p.m., the conference was adjourned, to be reconvened at Buffalo, New York, on Tuesday, August 10, 1965, at 9:30 a.m.)

GPO 900-582