EPA-R2-73-284

June 1973

Environmental Protection Technology Series

ABATEMEN

IN

Office of Research and
U.S. Environmental Protection
Washington, D.C.

EPA-R2-73-284

NITROGEN OXIDE ABATEMENT TECHNOLOGY IN JAPAN - 1973

by

Dr. Jumpei Ando and Mr. Heiichiro Tohata

Processes Research, Inc.
2900 Vernon Place
Cincinnati, Ohio 45219

Contract No. 68-02-0242, Task No. 11
Program Element No. 1A2013

EPA Task Officer: Frank T. Princiotta

Control Systems Laboratory
National Environmental Research Center
Research Triangle Park, North Carolina 27711

Prepared for

OFFICE OF RESEARCH AND MONITORING
U.S. ENVIRONMENTAL PROTECTION AGENCY
WASHINGTON, D.C. 20460

June 1973

Environmental Protection Agency
Region V, Library
230 South Dearborn Street
Chicago, Illinois 60604

This report has been reviewed by the Environmental Protection Agency and approved for publication. Approval does not signify that the contents necessarily reflect the views and policies of the Agency, nor does mention of trade names or commercial products constitute endorsement or recommendation for use.

NO_x Abatement Technology in Japan

(May 1973)

Jumpei Ando

Heiichiro Tohata

Faculty of Science and Engineering

Chuo University

Kasuga, Bunkyo-ku, Tokyo

NO_x Abatement Technology in Japan

(May 1973)

Contents

1 General survey

- 1.1 Introduction
- 1.2 Environmental concentration
- 1.3 Environmental quality standard
- 1.4 Emission control
- 1.5 Development of control methods
- 1.6 Development of measurement methods

2 NO_x abatement by combustion control

- 2.1 Pilot plant tests on NO_x abatement
- 2.2 Large-scale test on NO_x abatement (Kansai Electric Power)
- 2.3 Low-NO_x burner (IHI)

3 Reduction processes for NO_x abatement

- 3.1 Hitachi Shipbuilding process
- 3.2 Other catalytic reduction processes
- 3.3 Reduction by sodium sulfite (CCIC-JECCO process)

4 Absorption processes

- 4.1 Sodium scrubbing (Fujikasui process)
- 4.2 Alkali permanganate process (MON process)
- 4.3 Sodium-potassium permanganate process (Nissan process)
- 4.4 Alkali scrubbing (Shinko process)
- 4.5 Sodium scrubbing (Sun Mec SV process)
- 4.6 Alkali scrubbing (Kyowa Kako process)
- 4.7 Sodium scrubbing (Ube process)
- 4.8 Other alkali scrubbing processes

1 General survey

1.1 Introduction

Though the presence of nitrogen oxides (NO_x) in the atmosphere has been known for a good many years, it has assumed serious proportions in Japan since July 1970, when many girl students at Rissho Senior High School (Tokyo) complained of eye irritations, sore throats, coughs and other symptoms suspected to be due to photochemical smog. This was followed by similar incidents in Tokyo and other cities, most of the incidents occurring between late spring and autumn.

Table 1 shows the numbers of warnings issued for photochemical smog. Warnings are issued when the hourly oxidants concentration becomes equal to or greater than 0.15ppm. The Ministry of Health and Welfare and the Tokyo Metropolitan Government formed their own special committees in 1970 to investigate these phenomena. The reports published by these committees show that the phenomena were caused by photochemical smog similar to that experienced in Los Angeles, U.S.A.

The detailed mechanism of oxidants formation has hitherto been unknown, but the consensus is that NO_x seems to play an important role.

1.2 Environmental concentration

The annual averages of environmental NO_x concentration are shown in Table 2. The values listed in Table 2 were recalculated from previously published data using the conversion coefficient 0.72 instead of 0.50 in the naphthylethylene diamine method, because JIS K 0104 (Measurement of NO_x) is to be revised to use a variable coefficient in accordance with the concentration.

The total amount of NO_x emitted in Japan is roughly estimated to be 2×10^6 t/year. In December 1972, the Environment Agency presented the result of investigation on the contribution of various sources to NO_x emission in the Tokyo Bay area, i.e. Tokyo Metropolis, Kanagawa Prefecture, Chiba Prefecture, and Saitama Prefecture (Fig. 1). It is pointed out that the contribution of automobiles would be more than 50% in urban areas.

1.3 Environmental quality standard

In 1971, the Ministry of Health and Welfare organized a special committee to prepare the scientific bases for air quality standards for NO_x and oxidants. Later, this work was taken over by the Central Council on Environmental Pollution Control of the Environment Agency. On April 26, 1973, the

Council recommended to the Environment Agency the following standards.

NO_x	0.02ppm (daily average of one-hour values)
Oxidants	0.06ppm (hourly average)

The standard for NO_x is to be attained within 5 years. In Tokyo, Kawasaki and other cities where environmental concentration is very high, however, it is to be achieved within 8 years, and by 1978, the NO_x concentration in 60% of the total number of days in a year must be reduced to this limit. The standard for oxidants is to be attained as soon as possible.

The standard proposed for NO_x is very severe compared with those in other countries (e.g. 0.05 annual average in the U.S.A. and 0.04 daily average in the U.S.S.R.), but considering the serious situation in Japan, it is likely to meet with public approval. These standards are expected to be set forth by the Cabinet in near future.

1.4 Emission control

In order to keep the levels of NO_x pollution under 0.02ppm, emissions both from motor vehicles and stationary sources must be controlled.

1.4.1 Motor vehicle exhaust gas

In June 1970, the Ministry of Transportation published a 5 Year Plan for a Basic Program for Automobile Exhaust (Table 3). The figures in Table 3, except those for carbon monoxide, are not those set by law, but are guidelines for future control. An automobile exhaust control act, analogous to the Muskie Act in the U.S.A., is expected to be set forth in near future.

1.4.2 Waste gases from stationary sources

According to the Air Pollution Control Law (amended in 1970), an emission standard for SO_2 is given by the following formula.

$$q = K \times 10^{-3} He^2$$

where q = quantity of SO_2 in m^3/hr at 0°C and 1 atm.

K = constants ranging from 2.92 to 22.2 according to the area

He = effective height of discharge in meters

K values are scheduled to be reduced to about 1/3 of the present values within this year. We commonly call this type of control "K-value control". Since NO_x and SO_2 are similar pollutants in that both are emitted from the combustion of fossil fuels and originate from a wide variety of sources, control of NO_x from stationary sources would possibly follow the same pattern as in the case of SO_2, i.e. "K-value control".

1.5 Development of control methods

There are two approaches to control; one is to reduce emission by combustion modification, the other is to extract NO_x by some means from the exhaust gases before allowing them to enter the atmosphere.

1.5.1 Control methods for automobiles

Automobile engines that produce a minimum of pollutants have been developed by such national research institutes as the Mechanical Engineering Laboratory (Ministry of International Trade and Industry) and the Traffic Safety and Nuisance Research Institute (Ministry of Transportation), as well as by automobile manufacturers and universities. The most remarkable outcome of these development efforts is the CVCC (combined vortex controlled combustion) engine of Honda Motor Co. As for NO_x emission, although the engine does not satisfy the Muskie standard for 1976, it is said to be a matter of time that it will be reduced to that level. While some problems must be resolved before it can be put to practical use, this contrivance should be highly evaluated.

Conversion catalysts for automobile exhaust gas have been developed by the National Research Institute for Pollution and Resources, the Government Chemical Research Institute, Tokyo (MITI), and by some engineering and chemical companies. Some catalysts are already in practical use, but the development of highly durable catalysts, especially those for reduction of NO_x, is yet to be accomplished.

1.5.2 Control methods for stationary sources

(1) Control by combustion modification

As shown in Chapter 2, electric power companies, national research institutes, boiler makers, and some universities have developed combustion methods designed to reduce NO_x emission from boiler furnaces and other combustion facilities. Use of a new type of burner, low-oxygen combustion, two-stage combustion, recycling of flue gas etc. have been tried. Among these methods,

the use of a new type of burner, as shown in 2.3, seems to be the most promising for oil and gas burning, because considerable NO_x abatement can be achieved at the lowest cost. Reduction ratio by this method, however, is reported to be 50% at the highest, and for further abatement it would be necessary to develop other methods. In cases where there is extreme need for NO_x abatement, the use of pure oxygen for combustion would have to be considered.

(2) Removal of NO_x from flue gases

Countermeasures for large-scale boilers would be along the line reviewed in the preceding section, but there are many other stationary sources where NO_x cannot be reduced in that way. Attempts to remove NO_x from waste gases have been directed chiefly toward purifying tail gas from nitric acid plants and waste gas from pickling plants. The problem is how to apply these techniques to flue gases from combustion facilities. Table 4 shows the denitration processes under development in Japan.[2,3]

The denitration processes are classified into two groups; in one, NO_x is absorbed by means of solutions, and in the other NO_x is reduced to N_2 by means of a reducing gas under the presence of catalyst.

Since the main component of NO_x in flue gases is NO which cannot be easily absorbed or reacted with water or alkaline solutions, it is desirable that, in the absorption process, NO be oxidized into NO_2 with some oxidizing agent, such as ClO_2, $NaClO_2$, or $KMnO_4$, either in the gaseous or liquid phase. Many processes described in Chapter 4 use oxidizing agents. The disadvantages of the absorption processes are that they involve high cost for chemicals, require disposal of waste solutions, and they seem unsuitable for large-scale installations. Absorption processes have been developed by many engineering and chemical companies and some universities (including our laboratories).

The catalytic reduction of NO_x is more promising for flue gas treatment because the products, N_2, H_2O, etc., are free from secondary pollution. Problems, however, remain as to the durability and cost of catalysts, the presence of oxygen, sulfur dioxide and steam, initial cost of processing plant and so forth. Most of the processes treat nitric acid plant tail gas using platinum catalyst developed in the U.S.A. by UOP, Oxy Catalyst and Engelhard. The Hitachi Shipbuilding process aims at the treatment of flue gas (see 3.1).

1.6 Development of measurement methods

Nitrogen oxides are usually measured colorimetrically with the reagents naphthyl-ethylene diamine or phenol-disulfonic acid. Instruments for analysis, such as those based on chemical luminescence of NO, infrared

absorption, ultraviolet absorption and constant voltage electrolysis, have been developed in recent years to meet the needs of the market. Among them, the chemical luminescence analyzer (vacuum and normal pressure type) is widely used because of precision and rapid response in measuring NO concentrations. NO_x analyzers are manufactured by several makers, representatives of which are Hitachi-Horiba, Shimazu, and Yanagimoto.

Table 1 Numbers of warnings issued[1)]

Prefecture	Year	Jan.-March	April	May	June	July	Aug.	Sept.	Oct.-Dec.	Total
Saitama	1971	0	0	2	3	8	8	2	0	23
	1972	0	1	2	5	1				
Chiba	1971	0	0	0	7	4	4	2	2	19
	1972	0	1	1	6	4				
Tokyo	1970	0	0	0	0	5	1	1	0	7
	1971	0	0	3	9	8	9	3	6	38
	1972	0	2	6	5	5	10			
Kanagawa	1971	0	0	1	5	3	1	1	0	11
	1972	0	1	3	8	6				
Aichi	1971	0	0	0	0	1	0	0	0	1
	1972	0	0	0	1	2	1			
Osaka	1971	0	0	0	0	0	2	2	0	4
	1972	0	0	1	4	3	3			
Hyogo	1971	0	0	0	1	2	2	2	0	7
	1972	0	0	1	3	4	5			
Total	1971	0	0	6	26	26	27	12	8	113
	1972	0	5	14	32	25				

Table 2 Annual average of environmental concentration (ppm)[1)]

City	Monitoring station	1969	1970	1971
	National Air Monitoring St.	0.040	0.041	0.046
Tokyo	In front of Metropolitan Government Office	0.040	0.034	0.044
	Setagaya		0.028	0.033
	Itabashi		0.042	0.040
	Kasumigaseki	0.042	0.044	0.040
Osaka	National Air Monitoring St.	0.014	0.029	0.027
Nagoya	National Air Monitoring St.	0.012	0.016	0.014
Kawasaki	National Air Monitoring St.	0.035	0.037	0.031
Sapporo	National Air Monitoring St.	0.022	0.030	0.028
Matsue	National Air Monitoring St.		0.003	0.003

Table 3 Automobile exhaust emission reduction program in Japan

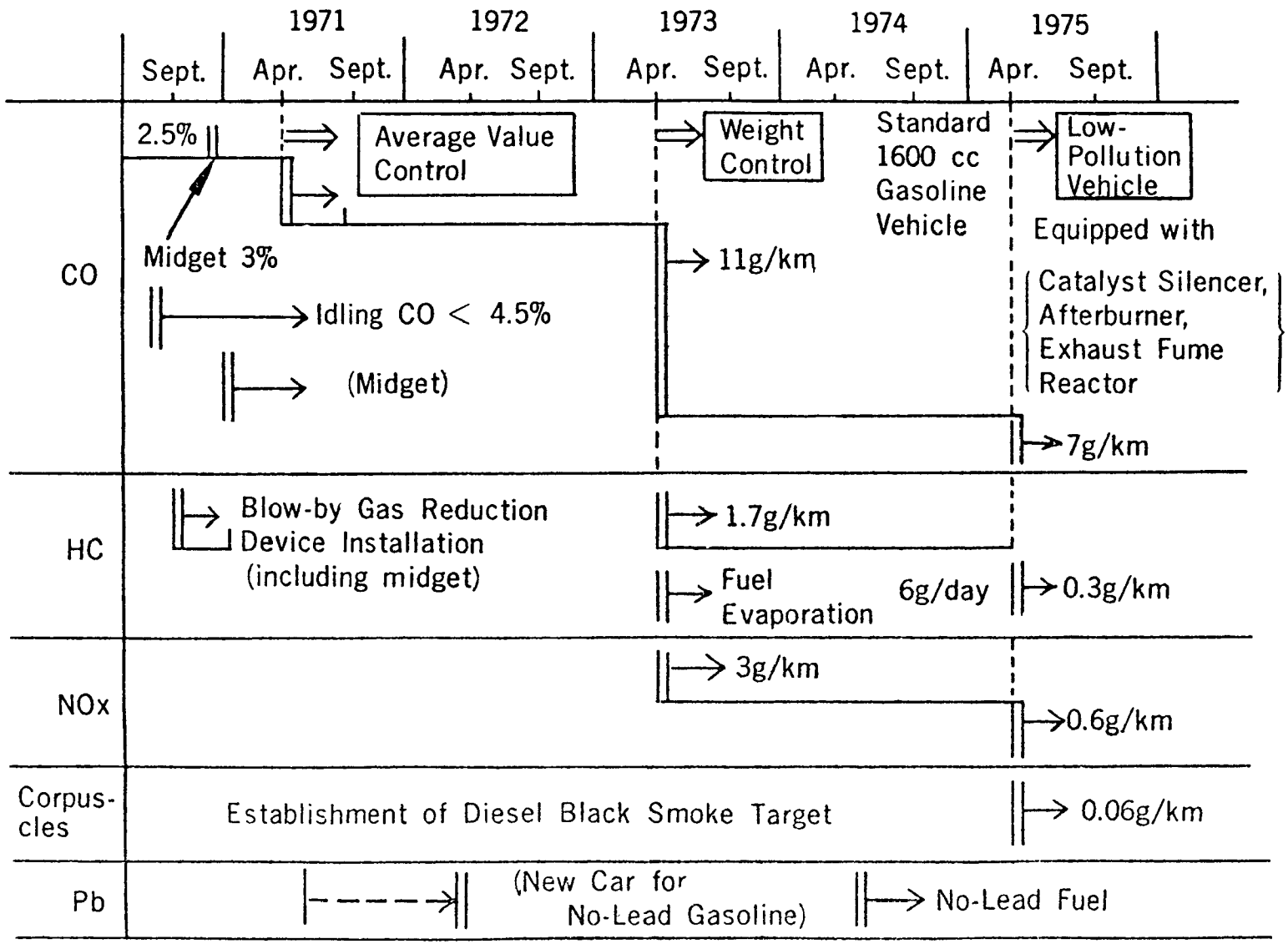

Source: Transportation Technical Council.

Table 4 Major denitration plants in Japan[2, 3]

Process developer	Plants in operation
Catalytic reduction	
Hitachi Shipbuilding	A pilot plant for flue gas (5,900scfm)
Japan Engelhard	A test plant for flue gas from diesel engine
Japan Gasoline-UOP	Two plants for nitric acid plant tail gas
Kobe Steel-Oxy Catalyst	Several plants for nitric acid plant tail gas, etc.
Sumitomo Chemical	Several plants for nitric acid plant tail gas
Mitsubishi Heavy Industries	Three plants for nitric acid plant tail gas
Absorption(alkali scrubbing)	
Fujikasui Engineering	A pilot plant for flue gas(37,000scfm, under construction)
Mitsubishi Metal, et al.	A pilot plant for flue gas (170scfm)
Nissan Engineering	A plant for nitric acid plant tail gas (1,200scfm, under construction)
Kobe Steel	A plant for pickling waste gas(9,200scfm)
Kyowa Kako	A pilot plant for pickling waste gas
Sun-Oh Reinetsu-Matsushita	Several plants for pickling waste gas
Ube Industries	A commercial plant for nitric acid plant tail gas (being designed)
Mitsubishi Heavy Industries	Three plants for pickling waste gas
Hishinaka Industries	Several plants for pickling waste gas

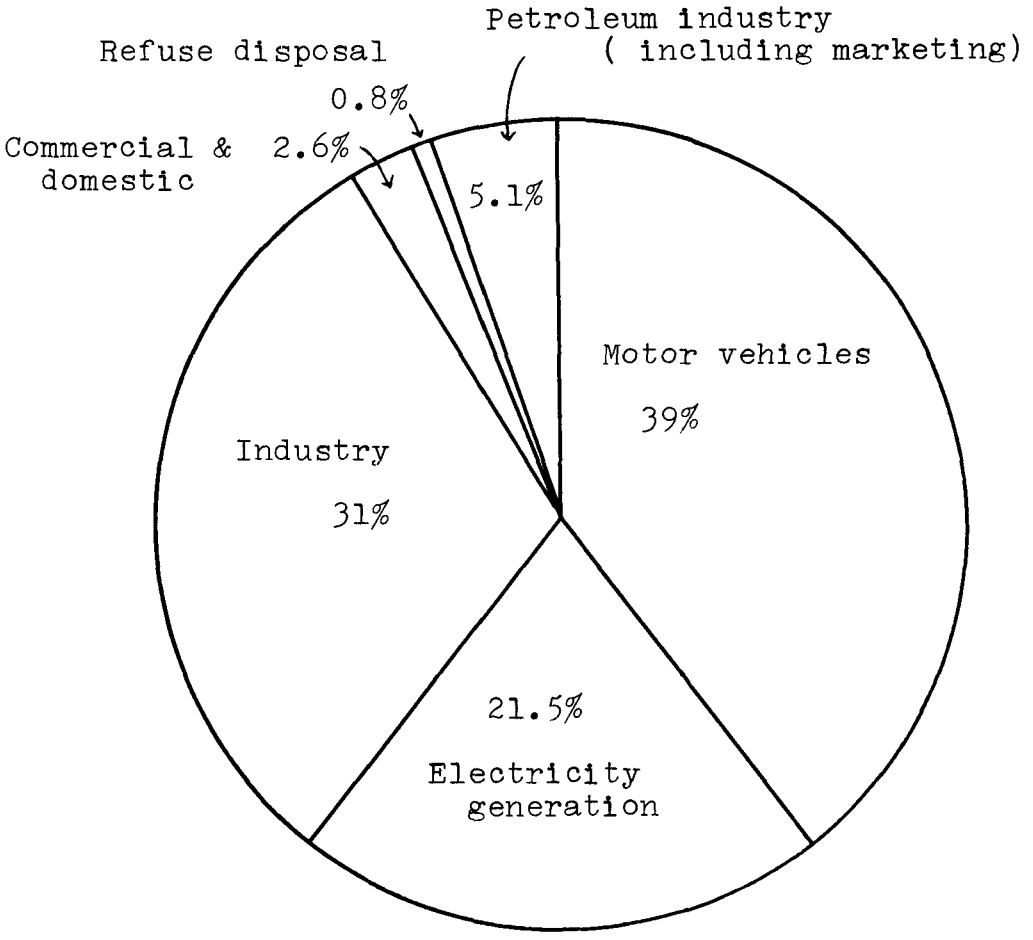

Figure 1 Contribution of sources in Tokyo Bay area (1970)

2 NO_x abatement by combustion control

2.1 Pilot plant tests on NO_x abatement[4)]

Developer

Research organization Technical Laboratory, Central Research Institute of Electric Power Industry
1229, Iwato, Komaemachi, Kitatama-Gun, Tokyo

Description Tests on NO_x abatement by mixing flue gas with air for combustion were made with a test furnace (heavy oil 0.3lbl/hr). Some of the results are shown in Figures 2.1.1 and 2.1.2. Mixing the flue gas with secondary air was found more effective for NO_x abatement than with whole air for combustion (Figure 2.1.1). By mixing flue gas with secondary air in an amount equal to 15% of whole air, flame temperature was reduced by about 50°F, dust (fly ash) by about 35%, and NO_x by about 13%, when the oxygen content of the combustion gas was 1% (Figure 2.1.2).

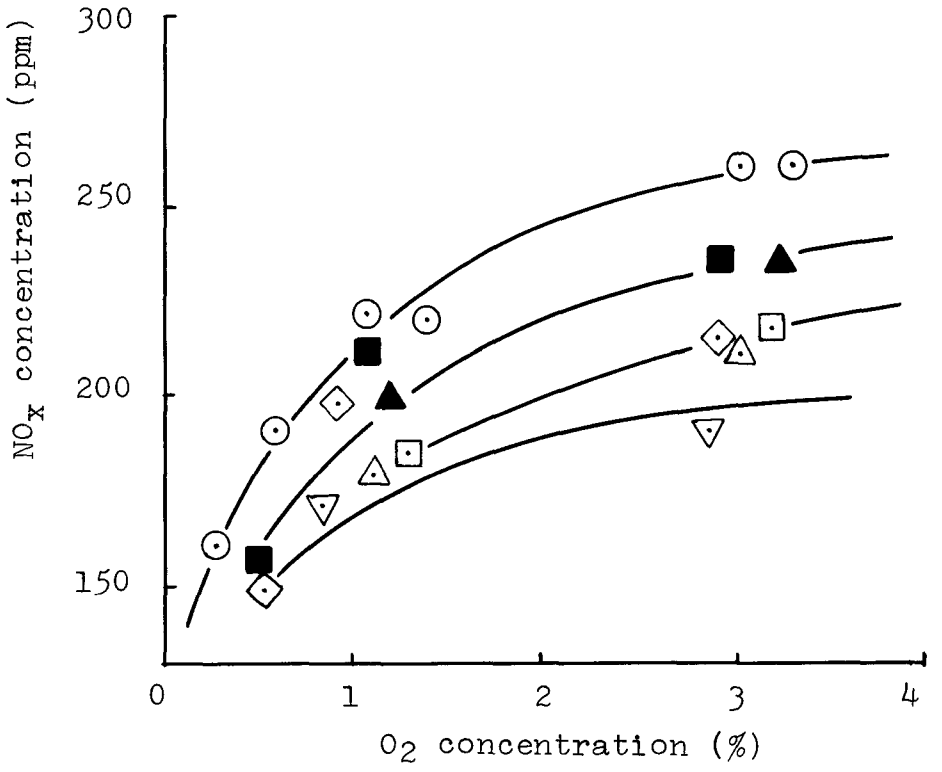

Symbol	Mixing ratio (flue gas to air)	Flue gas added to:
⊙	0	—
◇	0.1	Secondary air
⊡	0.2	Secondary air
△	0.3	Secondary air
▽	0.4	Secondary air
■	0.1	Whole air
▲	0.15	Whole air

Figure 2.1.1 Effects of mixing flue gas with air

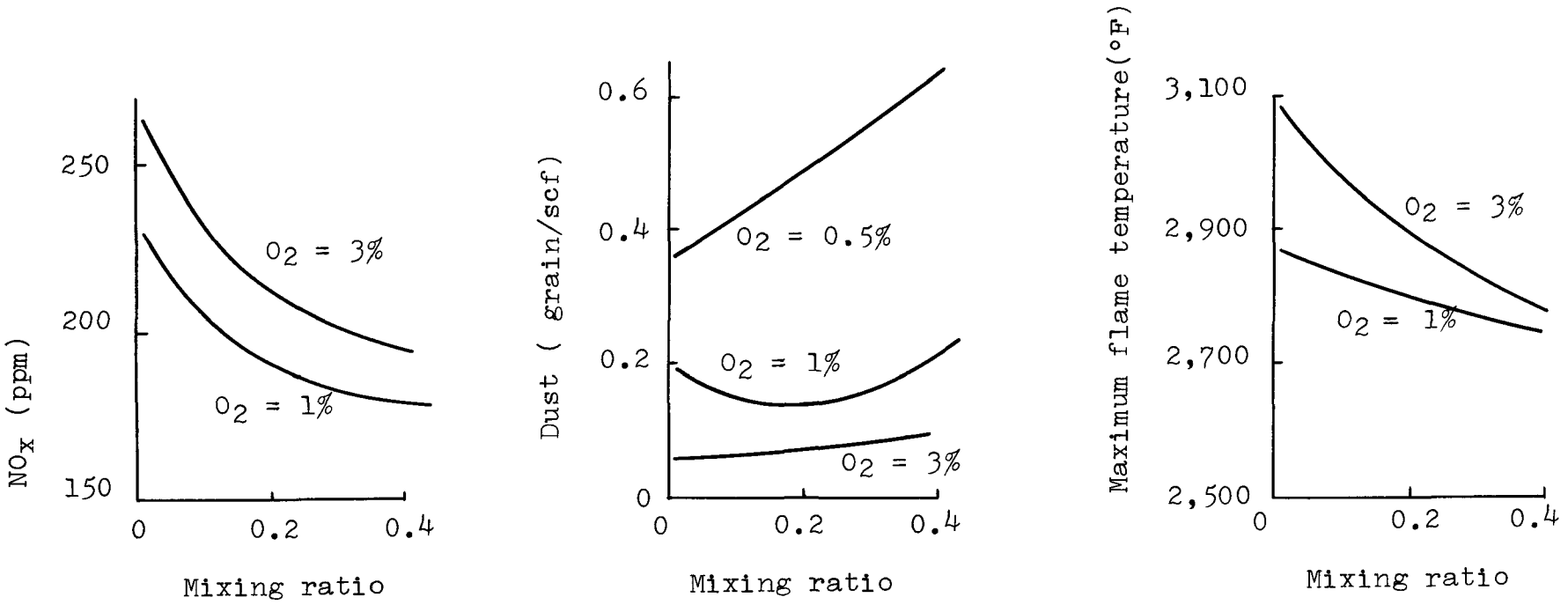

Figure 2.1.2 Effects of mixing of flue gas with secondary air on NO_x and dust concentrations and flame temperature
(Mixing ratio means the ratio of flue gas to whole air.)

2.2 Large-scale test on NO_x abatement (Kansai Electric Power)[5)]

Developer Kansai Electric Power Co.
3-5, Nakanoshima, Kita-ku, Osaka

Description Kansai Electric Power has improved a 450MW oil-fired boiler at Himeji Power Station to abate NO_x in flue gas and has made tests since July 1972. The boiler was originally manufactured by Combustion Engineering Co., U.S.A. to produce 1,450t/hr of steam at 1,006°F with a pressure of 3,810 lb/square inch (superheater outlet). At an additional cost of about ¥230 million ($880,000) improvements were made on the boiler for the following purposes:

(1) Two-stage combustion by feeding a portion (maximum 10%) of air for combustion through "NO_x ports" which have been newly provided above the burners, so that the air charged to the burners has been reduced in order to lower the flame temperature.

(2) Recycling of combustion gas. A portion of flue gas (maximum 10%) is recycled and mixed with air for combustion in order to lower the combustion rate.

The following results have been obtained with the improved boiler: NO_x was abated with increasing amounts of air to "NO_x ports" and of flue gas recycled, but excessive increase in the amounts resulted in unstable combustion and overheating of superheater tubes. Acceptable amounts were 3% for the air to the NO_x ports and 5% for flue gas recycled. Optimum operation data are shown below in comparison with those obtained with the boiler before the improvement. NO_x was reduced from 370 to 190ppm by the improvement. In consideration of the frequent variation of the operation load of the boiler, the average NO_x concentration with the improved boiler would be 220-230ppm.

	Before improvement	After improvement
Capacity (MW)	450	450
NO_x in flue gas (ppm)	370	190
O_2 in flue gas (%)	1.7	2.0
Furnace temperature (°F)	2,840	2,640
Fuel consumption (bbl/hr)	660	672
Temperature of tube wall of primary superheater (°F)	980	986

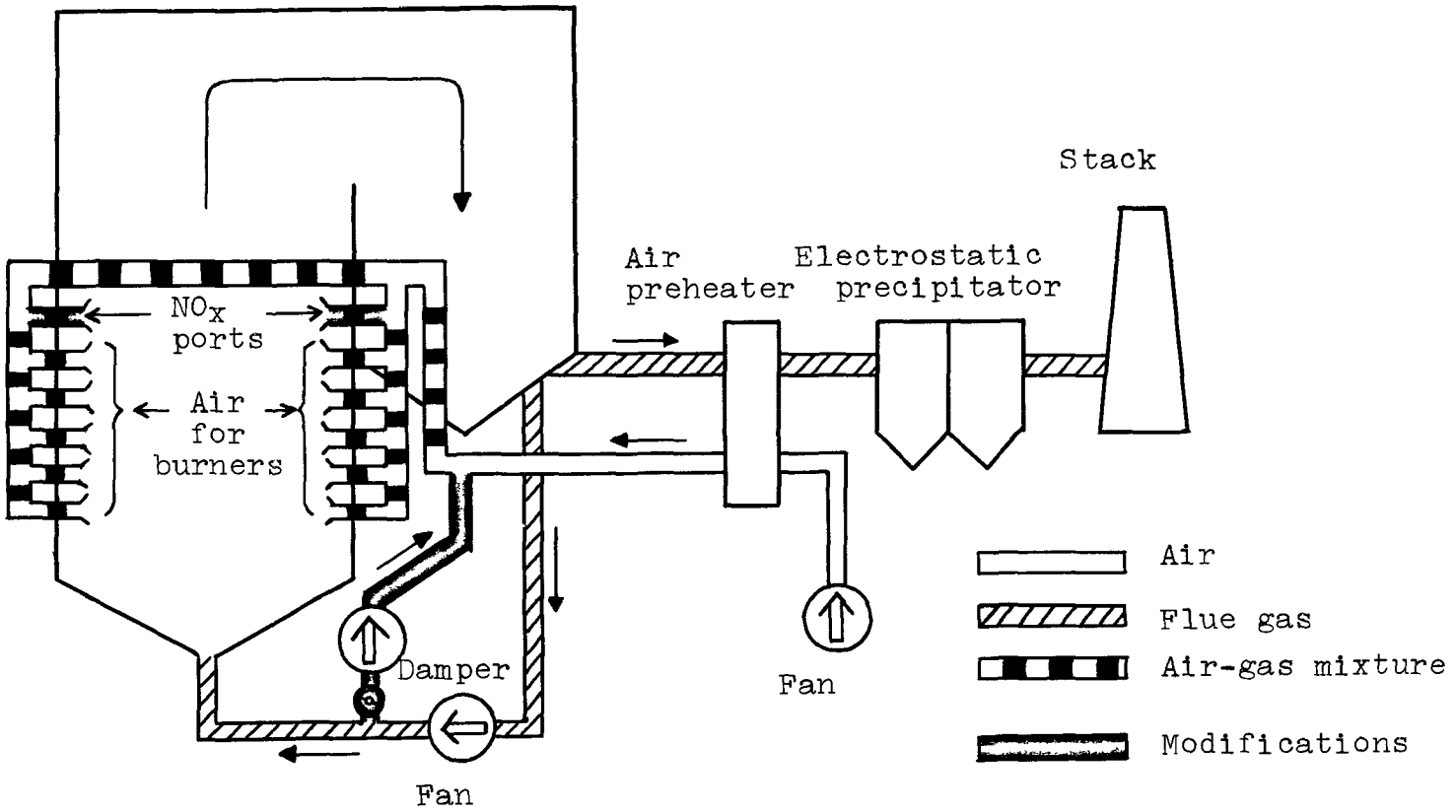

Figure 2.2 Boiler for large scale test (Kansai Electric)

2.3 Low-NO_x burner (IHI)[3)]

Developer Ishikawajima-Harima Heavy Industries Ltd. (IHI)
2-2-1, Otemachi, Chiyoda-ku, Tokyo

Description Various types of burners which are effective in reducing NO_x have been developed by IHI. Two examples are shown in Figure 2.3.1. The basic principle of the burners is that the flame is divided to lower the flame temperature. The results of tests on the burners with a furnace (23ft in diameter, 46ft in length, 4.4t heavy oil/hr, excess air coefficient 1.2) are illustrated in Figure 2.3.2. NO_x concentrations were reduced to 30-50% of those by the conventional burners.

State of development The type N-1 burner has been recently applied to a commercial oil-fired boiler of a power plant (84MW, with nine burners) and has helped reduce NO_x concentration by about 50%.

Applicability For oil and gas burners.

Advantage NO_x can be reduced substantially by a slight modification of the top part of burners.

Disadvantage No disadvantage. The method, however, may not be very effective for coal burners.

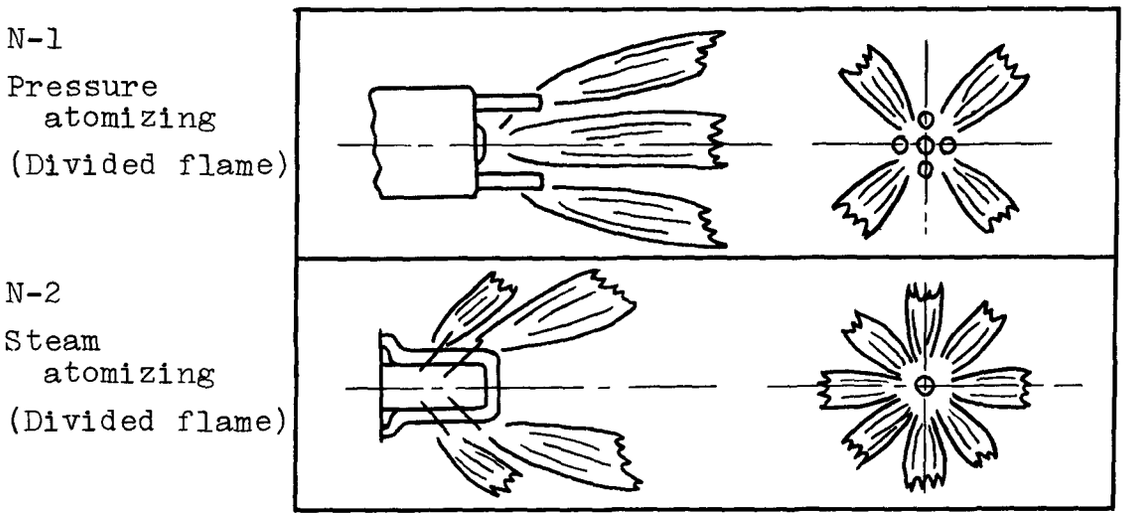

Figure 2.3.1 Shapes of divided flame

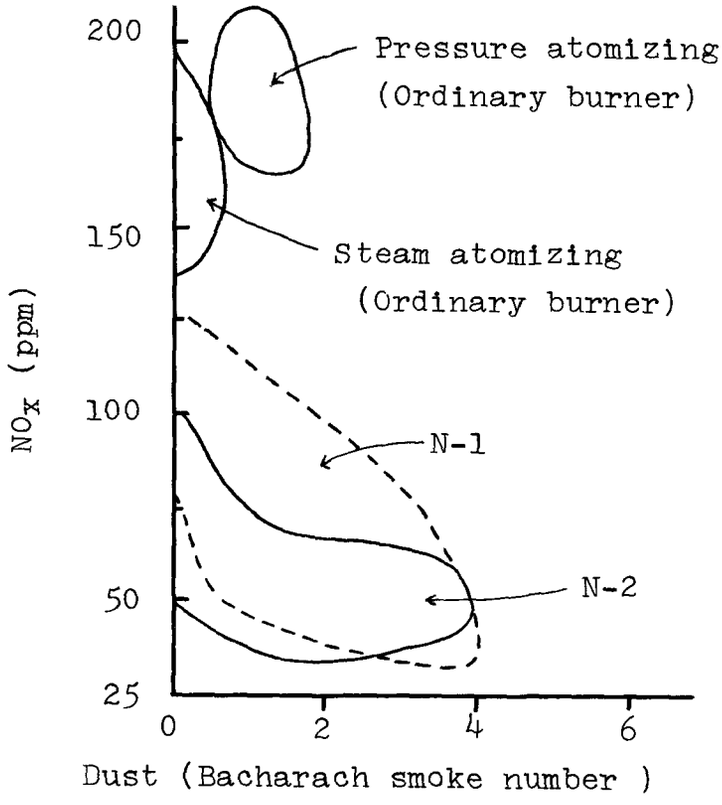

Figure 2.3.2 Effect of flame dividing on NO_x and dust concentrations

3 Reduction processes for NO_x abatement

3.1 Hitachi Shipbuilding process[3)]

Developer Hitachi Shipbuilding & Engineering Co.
1-47, Edobori, Nishi-ku, Osaka

Description Flue gas is divided into two portions and the larger portion is heated to 1,560°F. The hot gas is used to heat manganese-iron sulfite formed in the SO_2 absorption step. By the heating, manganese ferrite, absorbent for SO_2, is regenerated and SO_2 is expelled which is used for sulfuric acid production. The hot gas is then mixed with the rest of the flue gas and led into a CO generator, where the gas is reacted with coke to form CO and CO_2. The gas containing CO is led into a dust eliminator and then into a SO_2 absorber, where SO_2 is absorbed by granular manganese ferrite to form the sulfite mentioned above. The desulfurized gas is then led into a NO_x reducer, where NO_x is entirely reduced to N_2 reacting with CO in the presence of a cupric oxide catalyst. The treated gas is led into a stack after passing through a heat exchanger. CO present in excess in the gas reacts with water vapor to form CO_2 and therefore is not contained in the outlet gas. Neither NO_x nor NH_3 is detected in the outlet gas; SO_2 concentration is less than 10ppm.

Applicability Flue gas and other waste gases containing NO_x and SO_x

State of development The process was originally developed by Chevron Chemical, U.S.A. and has been much improved by Hitachi. A pilot plant (5,900scfm) at Sakai refinery, Kansai Oil Co. has started operation recently.

Advantages A very high removal ratio is attained for both NO_x and SO_2. No waste material other than the purified waste gas.

Disadvantage High temperature is required.

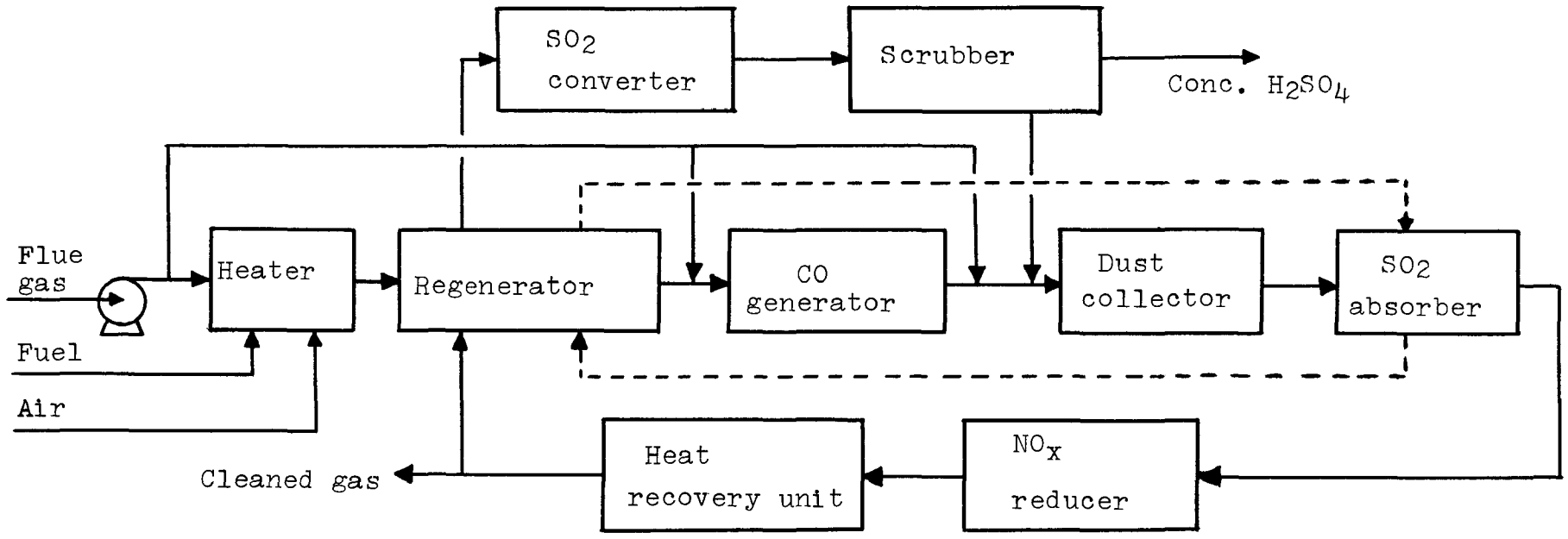

Figure 3.1 Flow sheet of Hitachi Shipbuilding process

3.2 Other catalytic reduction processes

Japan Gasoline Co. has constructed two units to treat nitric acid plant tail gas (NO_x 1,000-6,000ppm, O_2 2-4%) using UOP catalyst. Methane is used as the reducing agent; reaction temperature ranges from 1,200 to 1,500°F.[2] Kobe Steel Co. has built seven units to treat waste gases from nitric acid and pickling plants. Catalyst developed by Oxy-Catalyst Inc. is used. NO_x in inlet gas can be reduced from 1,800ppm to 80ppm by reduction with methane at 900°F under 100psig pressure.[2]

Sumitomo Chemical Industries has built a unit to treat nitric acid plant tail gas to reduce NO_x from 2,000-3,000ppm to 100ppm.[2] A conventional catalytic reduction process is used with some improvement on the heat recovery system.[3]

Mitsubishi Heavy Industries has constructed three units, each to treat about 10,000scfm tail gas from nitric acid plants. NO_x can be reduced from 2,000ppm to 100-200ppm by reaction with H_2, CH_4 or LPG at about 930°F.[2]

A test plant is in operation at Naoetsu Works, Mitsubishi Chemical Industries, to treat diesel engine flue gas using a catalyst developed by Engelhard, U.S.A.[3]

Detailed information on these processes is not available yet.

Bench-scale tests have been carried out by Aichiken Kogyoshidojo (Institute for Industrial Development, Aichi Prefecture) on catalytic reduction as well as on catalytic oxidation of NO_x.[2]

3.3 Reduction by sodium sulfite (CCIC-JECCO process)[3)]

Developer Catalyst and Chemical Industrial Co. Ltd. (CCIC)
2-6-2, Otemachi, Chiyoda-ku, Tokyo

Japan Engineering and Consulting Co. Ltd. (JECCO)
1-4, Ogawamachi, Kanda, Chiyoda-ku, Tokyo

Description Waste gas containing NO_x is treated with a sodium sulfite solution to reduce NO_x to N_2.

$$2Na_2SO_3 + 2NO = 2Na_2SO_4 + N_2$$

$$4Na_2SO_3 + 2NO_2 = 4Na_2SO_4 + N_2$$

As the above reactions occur slowly with conventional scrubbers, the rotary atomizer "Topca" invented by JECCO is used (Figure 3.3).

The atomizer divides the waste gas into numerous small bubbles 1-5mm (1/25 - 1/5in.) in diameter so that the reactions are promoted markedly. Bench-scale tests have shown that NO_x concentration could be reduced from 3,000 to 50ppm. Sodium sulfite can be obtained by waste-gas desulfurization with a sodium hydroxide solution. It might be possible to remove SO_2 and NO_x in waste gas simultaneously with a sodium hydroxide solution using the rotary atomizer. A large rotary atomizer can treat up to about 3,000scfm gas.

Advantages Sodium sulfite, by-product from waste-gas desulfurization, is used for NO_x removal. Simultaneous removal of SO_2 and NO_x may be possible under certain conditions. NO_x is utilized for oxidation of sodium sulfite which has been oxidized with air in many plants.

Disadvantage The process may not be suitable for treating a very large amount of waste gas particularly when it contains much oxygen.

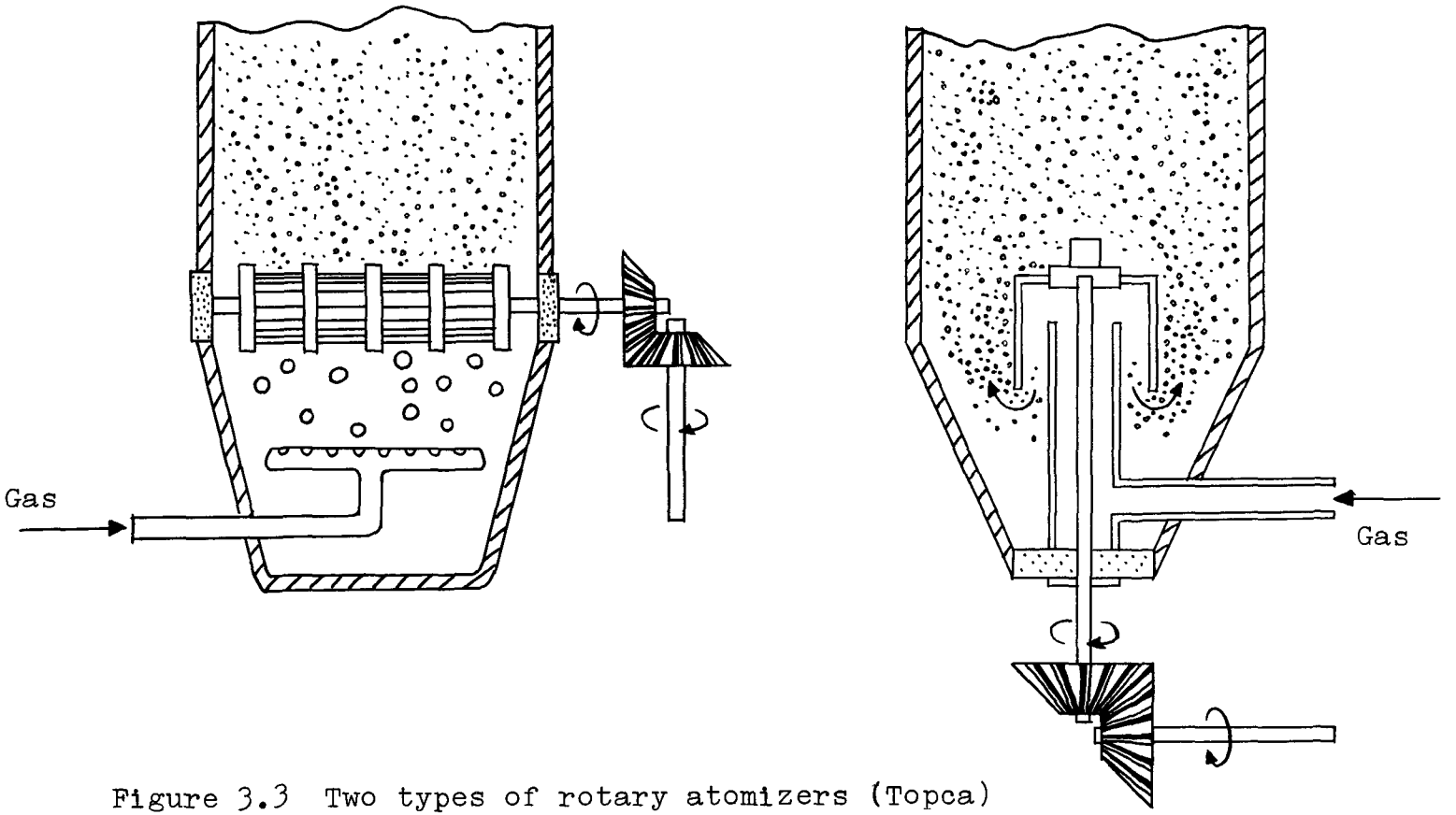

Figure 3.3 Two types of rotary atomizers (Topca)

4 Absorption processes

4.1 Sodium scrubbing (Fujikasui process)[3)]

Developer Fujikasui Engineering Co. Ltd.
1-4-3, Higashigotanda, Shinagawa-ku, Tokyo

Description Gaseous ClO_2 is added to waste gas containing NO_x to oxidize NO into NO_2. The gas is then washed in a scrubber with a $NaClO_2$ solution. This treatment removes more than 90% of NO_x in flue gas or more than 95% of that in waste gas from pickling plants and tail gas from nitric acid plants. The wastewater contains $NaNO_3$ and NaCl. NaCl is recovered from the solution, and subjected to electrolytic oxidation to produce ClO_2 and $NaClO_2$. In order to treat the flue gas containing a considerable amount of SO_2, it is preferable to remove SO_2 prior to the above treatment. SO_2 gas recovered from flue gas can be used for the production of ClO_2 gas.

Applicability Flue gas and other gases containing NO_x.

State of development Commercial plants are on stream to treat waste gas (7,000-14,000scfm) from pickling plants and flue gas from a glass melting furnace. A prototype plant designed for the treatment of boiler flue gas (37,000scfm) is under construction to start operation in August 1973.

Advantage Operation is easy. Low running cost. SO_2 recovered from flue gas can be used for the production of ClO_2 gas.

Disadvantage Wastewater treatment is required.

Economics Investment cost ¥3.4 million($13,000) for 1,000scfm

Running cost about ¥4 (1.5¢) for 1,000scf gas containing 260ppm NO_2.

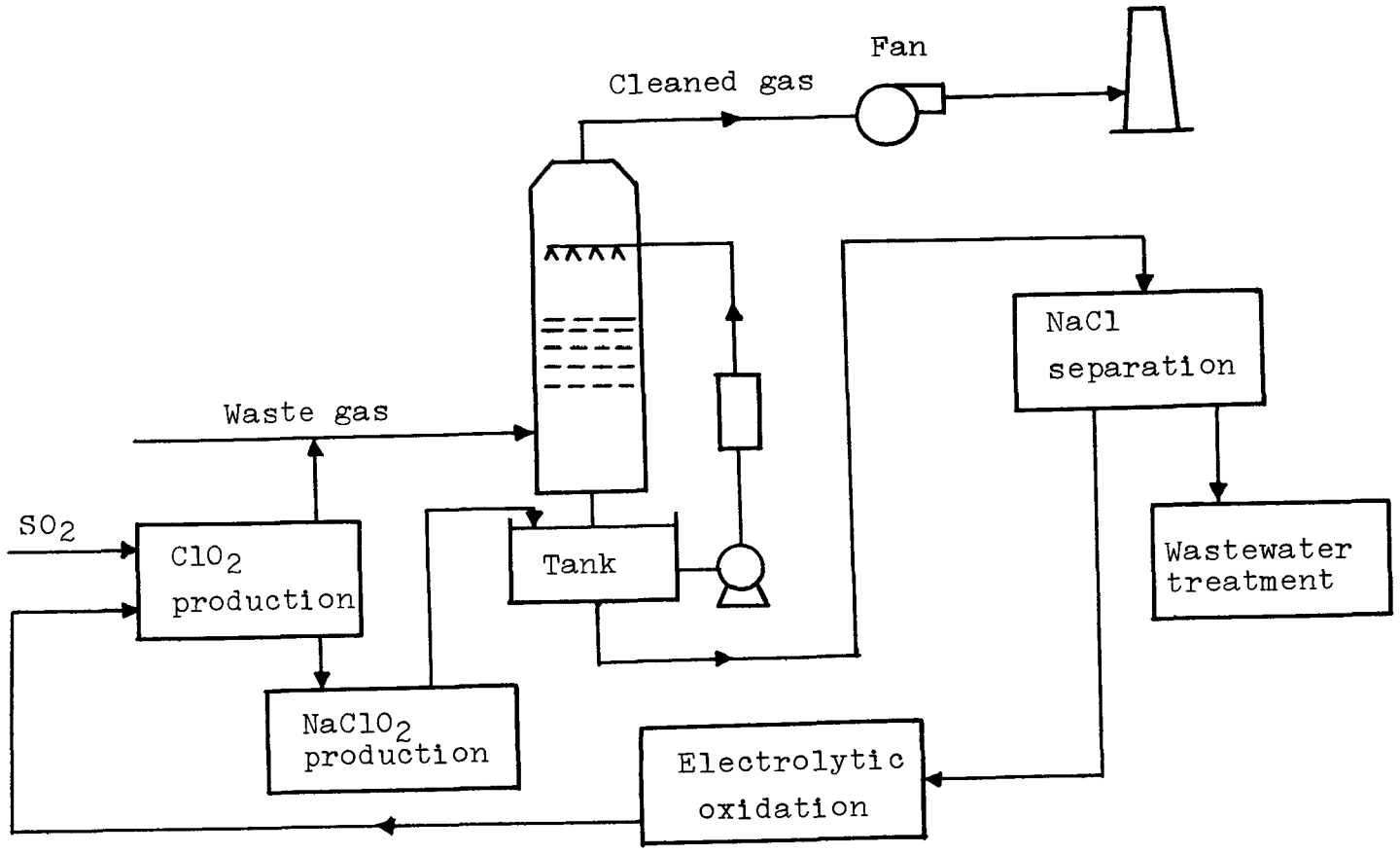

Figure 4.1 Flow sheet of Fujikasui process

4.2 Alkali permanganate process (MON process)[3)]

Developer Mitsubishi Metal Co.
1-5-2, Otemachi, Chiyoda-ku, Tokyo

Mitsubishi Chemical Machinery Mfg. (MKK)
2-6-2, Marunouchi, Chiyoda-ku, Tokyo

Nippon Chemical Industrial Co.
9-15-1, Kameido, Koto-ku, Tokyo

Description NO_x (and also SO_2) in waste gas are absorbed in an alkaline solution containing alkali permanganate or manganate, for example, a KOH solution containing $KMnO_4$. NO_x (and SO_2) are absorbed and oxidized to form alkali nitrate and sulfate while permanganate or manganate is reduced to precipitate manganese dioxide which is filtered off.

$$KMnO_4 + NO = KNO_3 + MnO_2$$

$$KMnO_4 + 2KOH + 3NO_2 = 3KNO_3 + MnO_2 + H_2O$$

$$2KMnO_4 + 4KOH + 3SO_2 = 3K_2SO_4 + 2MnO_2 + 2H_2O$$

Manganese dioxide is converted to alkali permanganate or manganate by a conventional process. The alkali nitrate (and sulfate) solution obtained is concentrated to produce a solid product which can be used for fertilizer and other purposes.

State of development Under the leadership of Professor T. Okabe, Tohoku University, the above-mentioned three companies have jointly developed the process. A pilot plant (170scfm) has been under continuous operation since November 1972 removing more than 90% of NO_x and virtually all of SO_2. The NO_x concentration is kept below 100ppm. A larger pilot plant (3,000-6,000scfm) is being designed.

Applicability For flue gas, waste gas from chemical plants, etc. To treat a large amount of flue gas from high-sulfur fuel, SO_2 in the gas should be subjected to desulfurization prior to the NO_x removal.

Advantages High removal ratio of NO_x and SO_2 is attained. No waste material is produced.

Disadvantage Potassium hydroxide is not cheap. Production of potassium permanganate from manganese dioxide is fairly expensive.

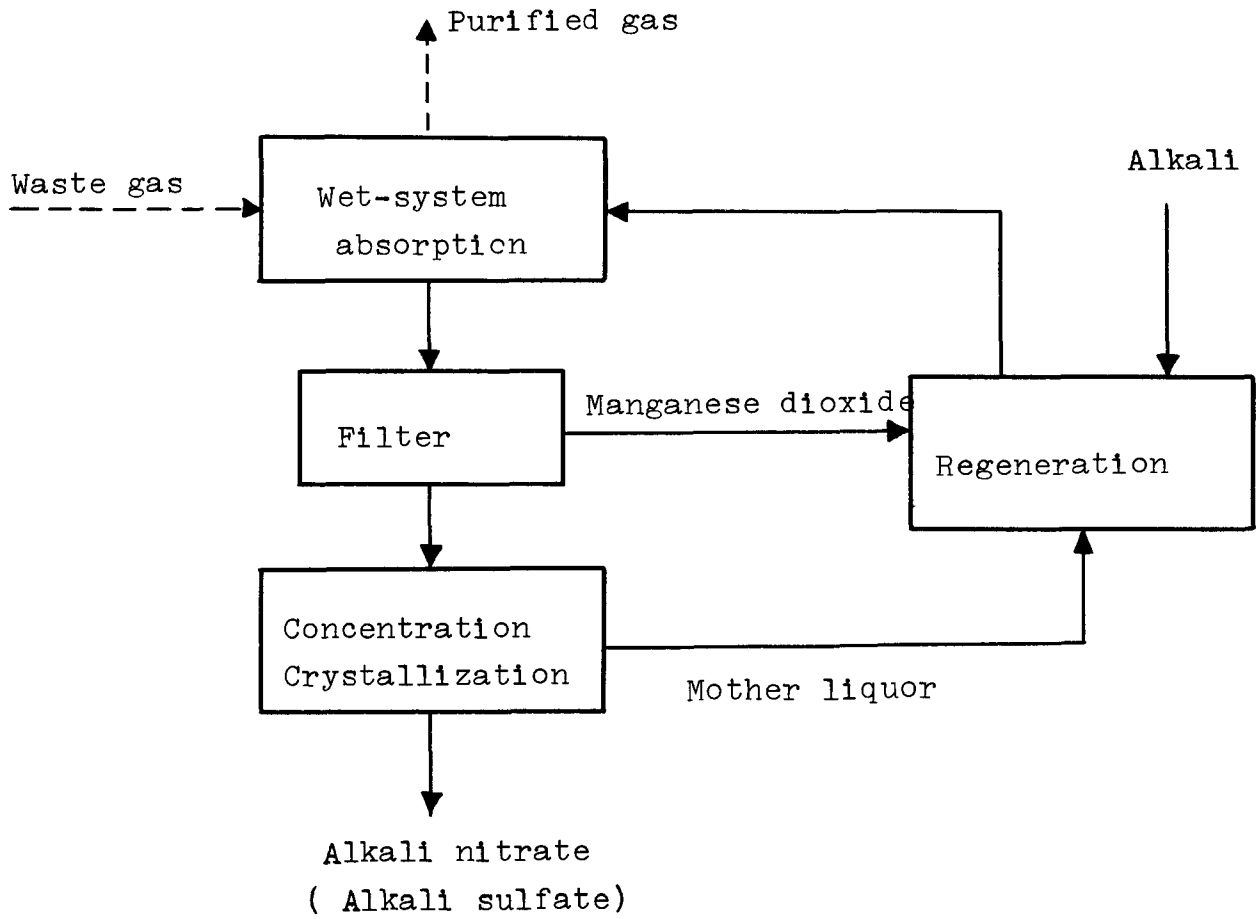

Figure 4.2 Simplified flow sheet of Mon process

4.3 Sodium-potassium permanganate process (Nissan process)[3)]

Developer Nissan Engineering, Ltd.
5-2-8, Toshima, Kita-ku, Tokyo

Description Waste gas containing NO_x is first washed in a scrubber with a solution containing sodium hydroxide and the discharge from a second scrubber to remove 70-80% of NO_x. The gas is then treated in the second scrubber with sodium hydroxide-potassium permanganate solution to oxidize NO into NO_2 which is aborbed by the alkaline solution. NO_x concentration of the outlet gas is kept below 100ppm. A portion of the second scrubber discharge which contains potassium manganate is subjected to electrolytic oxidation to regenerate potassium permanganate. The discharge from the first scrubber is sent to a wastewater treatment system.

Applicability Tail gas from nitric acid plants and other gases containing NO_x.

State of development Tests with a pilot plant (90scfm) have led to the construction of a commercial plant to treat 1,200scfm tail gas from a nitric acid plant.

Advantages A high removal rate of NO_x is attained. Operation is easy and is flexible enough to deal with the changing amount and concentration of gases.

Disadvantage Wastewater treatment is required.

Cost The running cost is about ¥8.5(3.2¢)/1,000scf gas containing 2,500ppm NO_x which consists of nearly equal volumes of NO and NO_2.

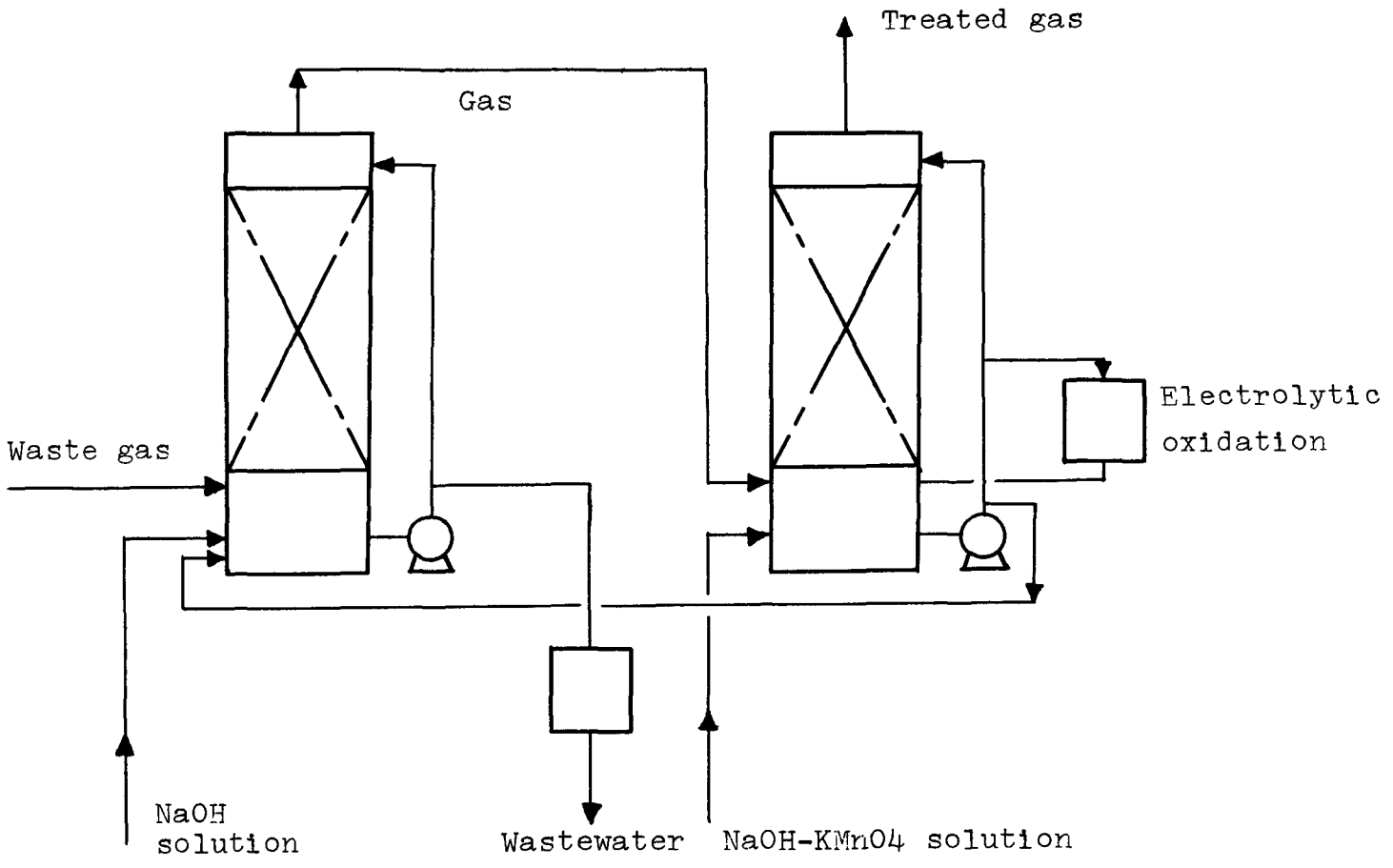

Figure 4.3 Flow sheet of Nissan process

4.4 Alkali scrubbing (Shinko process)[3)]

Developer Kobe Steel Co. Ltd.
1-3-18 Wakihamacho, Fukiai-ku, Kobe

Description Waste gas containing NO_x is first washed in a scrubber with a NaOH solution to remove about 30% of NO_x. The gas is then led into a reactor (a packed tower) containing granular alumina which has been sprayed with a solution containing NaOH and $NaClO_2$ and dried. In the reactor more than 95% of NO_x is removed forming $NaNO_3$, NaCl and gaseous ClO_2. The ClO_2 gas is removed in another tower with a solution containing NaOH and $Na_2S_2O_3$ forming NaCl and Na_2SO_4 which are discarded. The reacted absorbent in the reactor is treated intermittently to remove NaCl and $NaNO_3$ and to replace NaOH and $NaClO_2$.

Applicability Waste gas from pickling plants.

State of development A commercial plant with a capacity for treating 9,200scfm gas from a pickling plant is on stream at Chofu North Works, Kobe Steel Co.

Cost ¥22-34(8.5¢-13¢)/1,000scf gas containing NO_x 1,200ppm at a maximum and 230ppm on the average.

Advantage A high removal ratio is attained.

Disadvantage $NaClO_2$ is expensive.

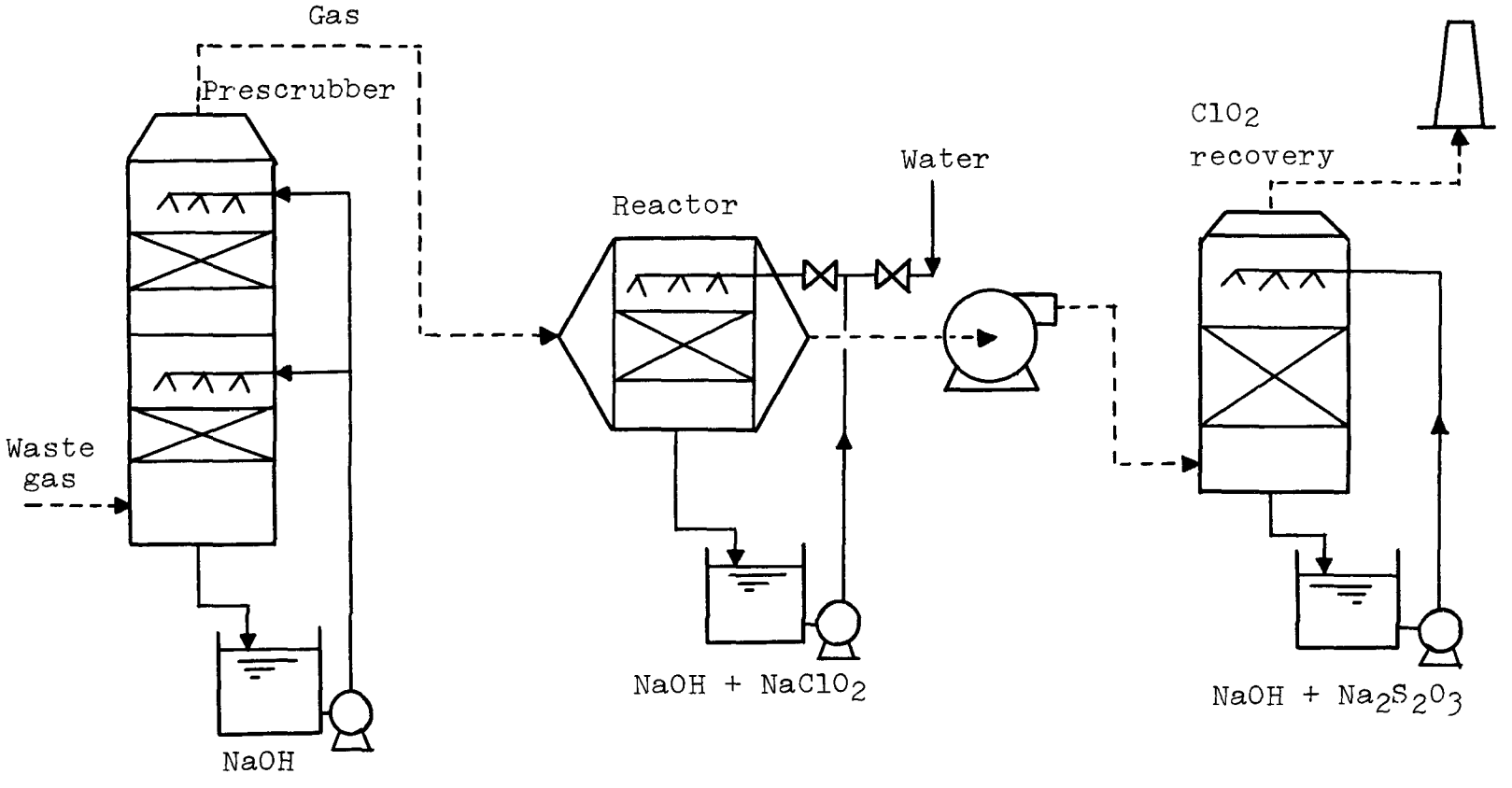

Figure 4.4 Flow sheet of Shinko process

4.5 Sodium scrubbing (Sun Mec SV process)[3)]

Developer Sun-Oh Reinetsu Co. Ltd.
18, Hatagocho, Kita-ku, Osaka

Matsushita Electronic Co.
1006, Oazakadoma, Kadomashi, Osaka

Description Waste gas with a high concentration of NO_x such as that from pickling plants is first washed with water or a sodium hydroxide solution to reduce the NO_x concentration to 1,000-3,000ppm and then led into a reactor. In the reactor, NO is converted to NO_2 and to HNO_3 while passing through a catalyst layer to which steam is fed. The gas containing HNO_3 is then washed with a sodium hydroxide solution. The treatments reduce NO_x to 100-200ppm.

Applicability Waste gas from metal dissolving and pickling plants and from chemical plants.

State of development A total of 12-13 commercial plants with capacities ranging from 350 to 3,500scfm are on stream.

Advantages Operation and maintenance are easy. Wastewater contains $NaNO_3$ but virtually no $NaNO_2$.

Disadvantage The process does not suit flue-gas treatment.

Economics Investment cost ¥25 million ($96,000) for 3,500scfm

Running cost ¥23(8.8¢)/1,000scf

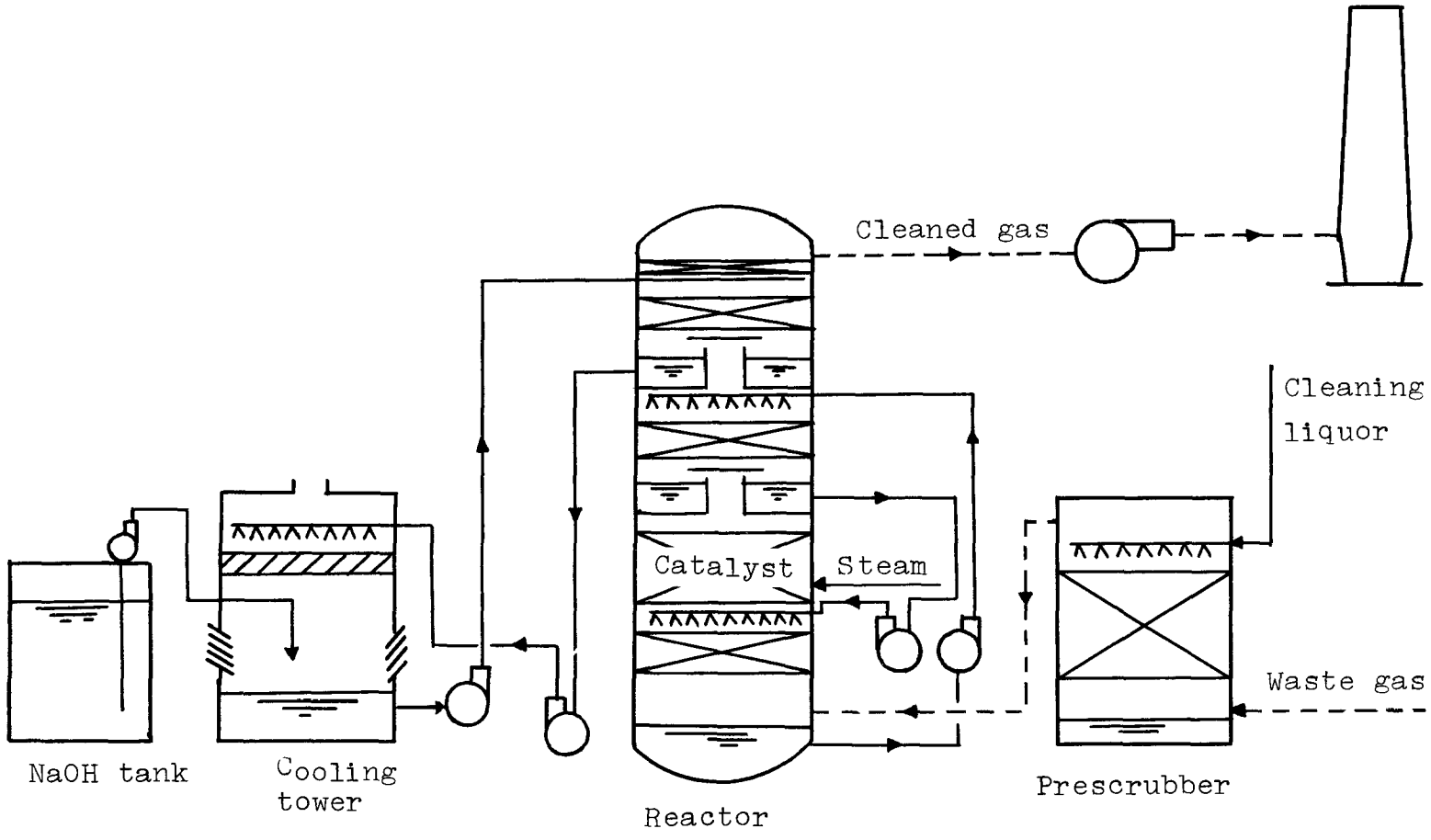

Figure 4.5 Flow sheet of Sun Mec SV process

4.6 Alkali scrubbing (Kyowa Kako process)[3)]

Developer Kyowa Kako Co. Ltd.
2-3, Maenocho, Itabashi-ku, Tokyo

Description Waste gas from a pickling plant containing NO_x is first washed in a scrubber with an alkaline solution (for example, sodium hydroxide solution) to remove acidic components of the gas such as HCl and HF, and also a portion of NO_x. The gas is then led into a second scrubber and treated with an alkaline solution containing an oxidizing agent such as hydrogen peroxide to remove most of NO_x. The gas is finally washed in a third scrubber with alkali hydrogen sulfide or alkali sulfide.

$$10NO_2 + 4Na_2S = 4NaNO_3 + 4NaNO_2 + 4S + N_2$$

$$4NO_2 + 4NO + 3Na_2S = 6NaNO_2 + 3S + N_2$$

NO_x present in inlet gas to an extent of 3,000 to 4,000ppm is reduced to below 50ppm by the treatments when NO_2 concentration is nearly equal to that of NO. When NO_2 is more than NO, it is not necessary to use an oxidizing agent in the second scrubber. When NO_2 is much less than NO, it is not easy to reduce NO_x to below 50ppm even with an oxidizing agent.

The liquors from the first and the second scrubbers are sent to a wastewater treatment system. That from the third scrubber is treated with ferrous sulfate to precipitate sulfide ion in the form of ferrous sulfide, and then with calcium hydroxide to precipitate sulfate ion in the form of gypsum. The slurry thus formed is filtered and the filtrate is sent to a wastewater treatment system along with the liquors from the other scrubbers.

Applicability Waste gas from pickling and chemical plants.

State of development A unit to treat waste gas from a pickling plant at 300-400scfm is being designed.

Advantage A high NO_x removal ratio is attained.

Disadvantages Wastewater treatment is not simple. Sludge disposal is required.

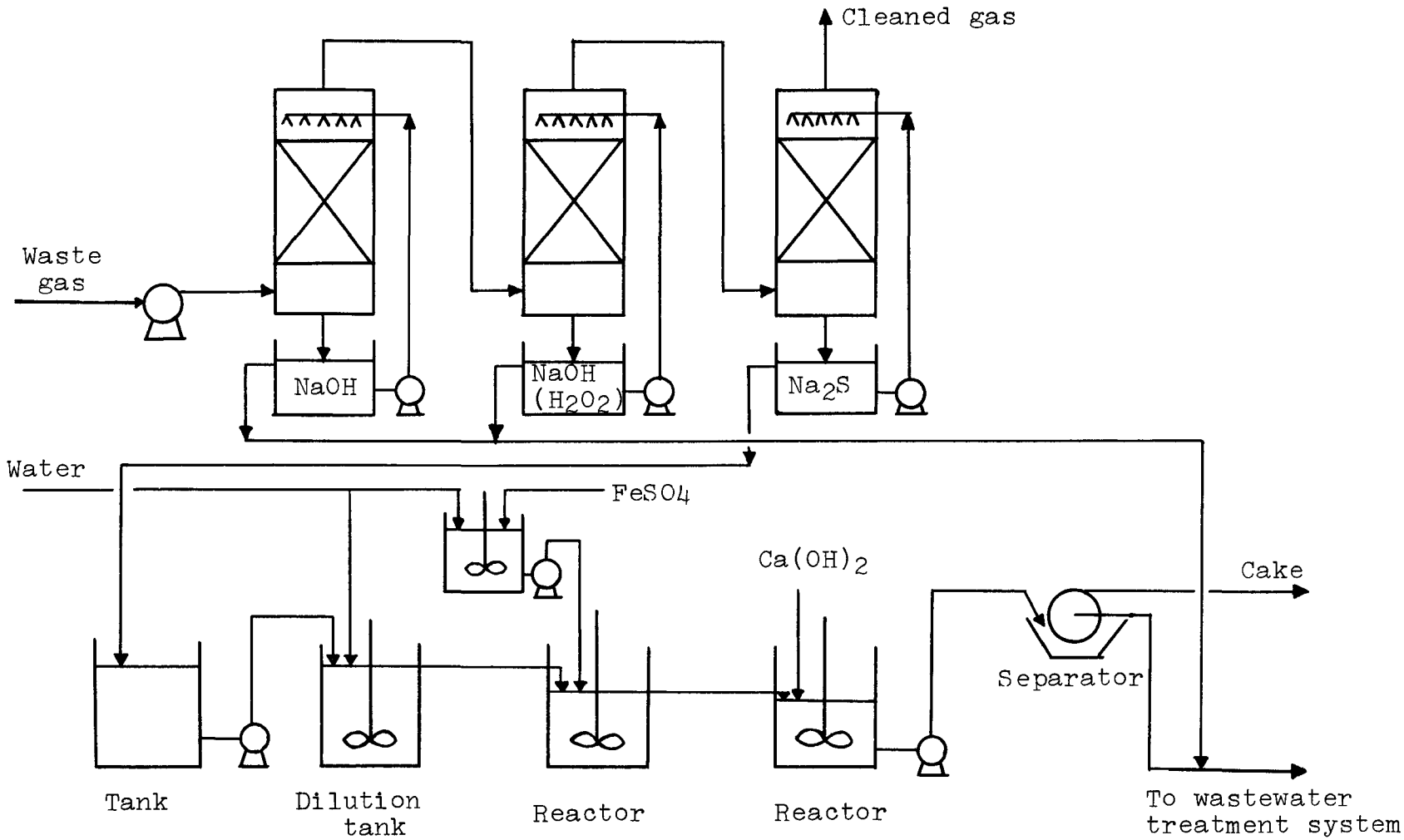

Figure 4.6 Flow sheet of Kyowa Kako process

4.7 Sodium scrubbing (Ube process)

Developer Ube Industries Ltd.
2-1, Nagatacho, Chiyoda-ku, Tokyo

Description A small portion of nitric acid plant process gas containing much NO_2 is added to tail gas which contains 1,000-3,000ppm NO_x and has a low NO_2/NO ratio in order to adjust the ratio to about 1. The mixed gas is treated with a NaOH solution in an absorption tower equipped with special dispersion elements. The treatments reduce NO_x in the gas to below 200ppm. $NaNO_2$ and $NaNO_3$ are recovered as by-products.

Applicability Nitric acid plant tail gas

State of development A commercial unit is to be built shortly.

Economics Investment cost for a 190t/day nitric acid plant is $280,000. The operating cost varies with the type of the acid plant.

Advantage The process is simple. Low investment and running costs.

Disadvantage Produces considerable amounts of $NaNO_2$ and $NaNO_3$, the demand for which is limited.

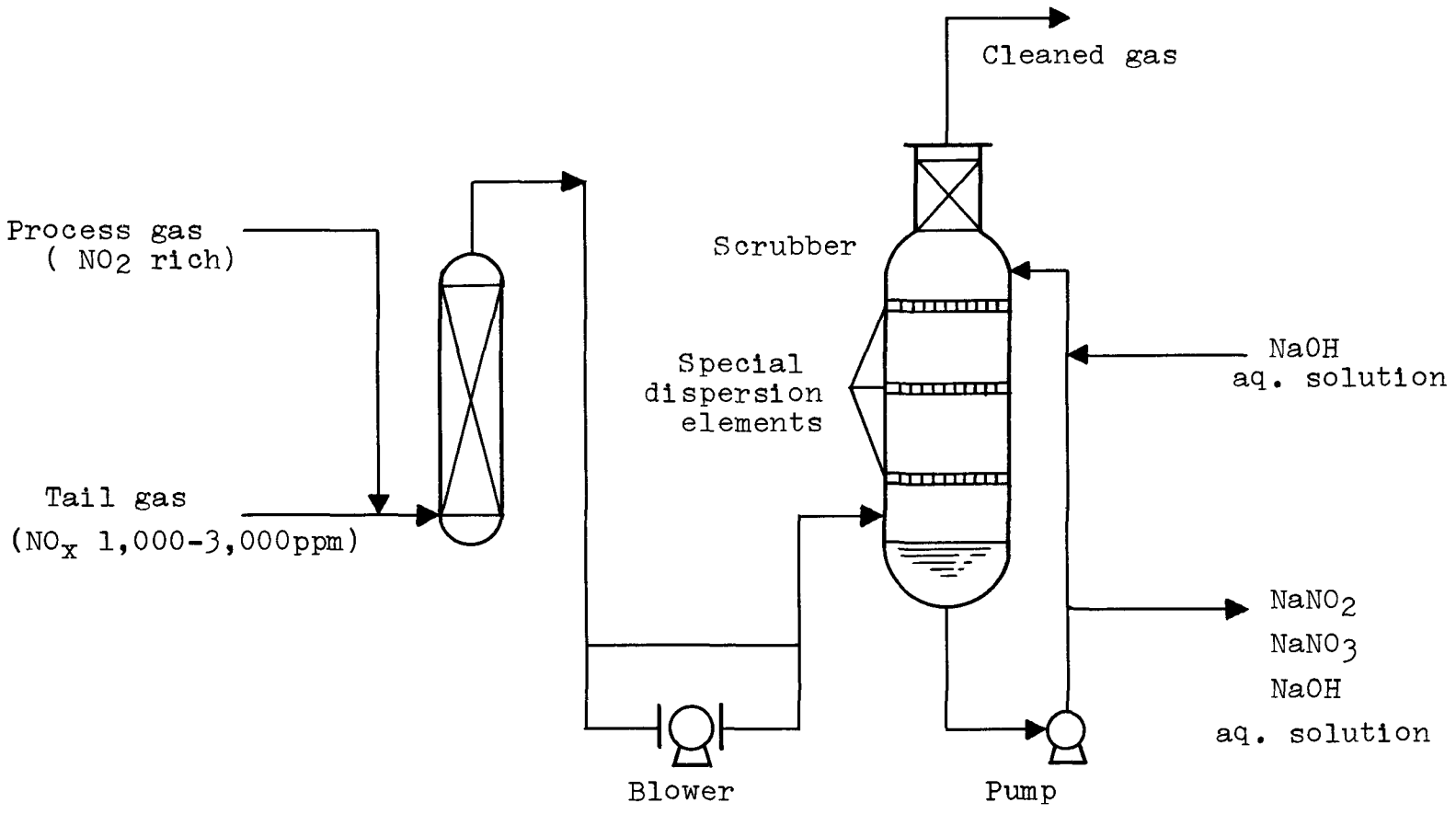

Figure 4.7 Flow sheet of Ube process

4.8 Other alkali scrubbing processes[2)]

4.8.1 Mitsubishi Heavy Industries process

Waste gas from pickling plants is first washed with water to recover nitric acid. The unreacted NO with some NO_2 is then absorbed by an alkaline solution to form nitrite solution. Three units ranging in capacity from 14,000-24,000scfm have been built. NO_x concentration in outlet gas ranges from 280 to 490ppm when the inlet concentration ranges from 700-2,100ppm.

4.8.2 Hishinaka Industries process

NO in waste gas is oxidized to NO_2 by passing through an activated carbon layer and then treated with a sodium hydroxide solution to produce sodium nitrite and nitrate. Several units to treat pickling waste gas are on stream.

References

1) Report of Air Quality Bureau, Environment Agency (1973)

2) Report of the Technical Comittee for NO_x, Public Utilities Bureau, Ministry of International Trade and Industry (March 1973)

3) Private Communication

4) Report 72026, Technical Laboratory, Central Research Institute of Electric Power Industry (Sept. 1972)

5) Report of Kansai Electric Power Co.

BIBLIOGRAPHIC DATA SHEET	1. Report No. EPA-R2-73-284	2.	3. Recipient's Accession No.
4. Title and Subtitle Nitrogen Oxide Abatement Technology in Japan -- 1973			5. Report Date June 1973 6.
7. Author(s) Dr. Jumpei Ando and Mr. Heiichiro Tohata			8. Performing Organization Rept. No.
9. Performing Organization Name and Address Processes Research, Inc. 2900 Vernon Place Cincinnati, Ohio 45219			10. Project/Task/Work Unit No. Task No. 11 11. Contract/Grant No. 68-02-0242
12. Sponsoring Organization Name and Address EPA, Office of Research and Development NERC-RTP, Control Systems Laboratory Research Triangle Park, North Carolina 27711			13. Type of Report & Period Covered Final 14.

15. Supplementary Notes

16. Abstracts The report documents development, demonstration, and control now in progress in Japan on Japanese processes pertaining to NOx abatement from flue gases. It includes Japanese environmental emission and control standards, and measurement methods. It presents process descriptions, states of development, advantages, disadvantages, economics, and flow sheets for 13 processes (including combustion control, reduction, and absorption) for NOx abatement from waste gases. A new type of burner seems most promising for combustion modification; catalytic reduction seems most promising for NOx removal from flue gases. NOx source contributions in the Tokyo Bay area are: 39% motor vehicles, 22% electricity generation, 31% industry, and 8 % other sources.

17. Key Words and Document Analysis. 17a. Descriptors

Air Pollution	Reviews
Nitrogen Oxides	Economics
Combustion	Reduction (Chemistry)
Abatement	Burners
Development	Catalysis
Control	Motor Vehicles
Flue Gases	Electric Generators
Standards	
Measurement	

17b. Identifiers/Open-Ended Terms

Air Pollution Control	Control Standards
Stationary Sources	Measurement Methods
Japan	Process Descriptions
Japanese Processes	Tokyo Bay Area
Emission Standards	

17c. COSATI Field/Group 13B, 14A, 21B

18. Availability Statement	19. Security Class (This Report)	21. No. of Pages
Unlimited	UNCLASSIFIED	37
	20. Security Class (This Page) UNCLASSIFIED	22. Price

FORM NTIS-35 (REV. 3-72) USCOMM-DC 14952-P72

Environmental [illegible] Agency
Region V, Lib[illegible]
230 South Dearborn Street
Chicago, Illinois [illegible]