LAKE MICHIGAN STUDIES

Special Report Number LM 10

DROGUE SURVEYS OF LAKE CURRENTS NEAR CHICAGO

May 1963

U. S. DEPARTMENT OF HEALTH, EDUCATION, AND WELFARE
Public Health Service
Division of Water Supply and Pollution Control
Great Lakes-Illinois River Basins Project

LAKE MICHIGAN STUDIES

Special Report Number LM 10

DROGUE SURVEYS OF LAKE CURRENTS NEAR CHICAGO

May 1963

U. S. DEPARTMENT OF HEALTH, EDUCATION, AND WELFARE
Public Health Service
Division of Water Supply and Pollution Control
Great Lakes-Illinois River Basins Project

TABLE OF CONTENTS

FIGURES

INTRODUCTION

The use of floats or drogues in the shallow waters of Lake Michigan provides detailed information on water movements and dispersion. Current meters are usually not used in water depths of less than 50 feet except for short periods of time. Problems of anchoring a current meter station and the orbital motion of storm waves in shallow water make this type of station unsuitable over a prolonged period of time.

Studies in the area of the proposed diffuser site (Figure 1) were made by aerial photography and color coded surface floats on April 11 and 12, 1963.

METHOD AND DESCRIPTION OF STUDY

Figure 2 shows a typical drogue and its size. The surface floats holding the drogues at a specified depth were coded by shape and color. The colors used were: green, white, orange, red, and yellow. The shapes used were: triangle, hexagon, rectangle.

Prior to placing the drogues in the water, reference markers, six meters long (19 feet), were set in the lake. Four rows of four markers each were set around the proposed diffuser site at 660 foot intervals (1/8 mile spacing). The diffuser location was marked by a buoy colored a brilliant orange. The reference markers were color coded for quick visual identification. The markers were double anchored to prevent swinging (translating) in the water.

Drogues were launched next to the upwind marker field. A drogue was set every 75-100 feet, five drogues to a pass. Twenty-five drogues, at the thirty foot depth, were set on the first run which was completed at 11:40. The surface floats of the five drogues placed during the first pass had the same shape but were of different colors. On the successive pasres the shapes were alternated and the colors were set in the same order as the first pass. Thus, each line of drogues had one shape and each row the same color. The second pass or placement of drogues was made after the first set of drogues moved out of the initial marker field.

A twin engine Beechcraft, with an aerial camera (Zeiss RMK 15/23 camera with a 6 inch lens) began to photograph the drogue field at 11:40 from a height of 900 feet and a speed of 120 miles per hour. The plane made 47 passes, at approximately five minute intervals. The photographs had a 60 percent overlap of field for easy identification. Each photograph contained three or more reference markers. About 900 frames, 9 x 9 inches, were exposed during the two days of study.

A dye patch of Rhodamine B was laid out during the period of the study. There was some downward diffusion of the dye but it tended to remain at the surface.

The color film was developed by the U.S. Navy at the Glenview Air Station photographic laboratory.

Although two days of drogue studies were made only the results from the first day have been analyzed.

The drogues were set in straight lines and every attempt was made to form a square pattern with the 25 drogues. Figure 3, taken seven minutes after the first flight shows the marked distortion of the original square pattern. As the drogues were placed in the water they settled at varying rates and were in normal position in about five minutes. However, the drogues sinking slowest moved downwind the fastest, since they remained longer in the faster moving surface layers. The elongation in the downwind direction continued over the three hour period, as seen in Figures 4 through 6.

Strong northerly winds blew for several days over the area and began to diminish on April 11, the first day of the study, although remaining from the north during the entire day.

RESULTS

Thirteen of the 25 drogues were identified and plotted on each of the figures. These drogues comprised the general outer limit of the drogue field.

The outer perimeter of the 13 drogues was joined by straight lines and the area covered was computed by planimetry at the end of each hour afloat. Figures 3 to 6, made at hourly intervals disclose several features of water motion. The original field, at zero hour, covered an area of 111,350 square feet. At the end of the first hour (Figure 4) the area had increased to 113,760 square feet or 1.02 times the original area. The second hour showed a slightly greater expansion of the field, to 1.12 times the original area. At the end of the third hour the increase was to 1.18 times the original area. These data do not indicate a significant change in dispersal area during the three hours of this study. In relative positions, the distance between drogues increased downwind and laterally. The average speed during the three hours of study was 0.055 feet per second (0.9 miles per day).

DISCUSSION

The first attempt to measure the mixing or dispersion rate was made by using drogues at the 30 foot level. It is realized that several sets of drogues placed at varying depths will give a more accurate picture of the dispersion rate than drogues set at one level. Surface speed, during the period of study, was 0.065 feet per second. Since the total water depth at the study area was approximately 50 feet, the drogue field set at 30 feet probably represented average conditions during the study period. Speeds at the 50 foot depth would not be significantly different from those at the 30 foot depth as indicated in Special Report No. LM 11. Studies of the surface water made during a reversal of flow of the Chicago River into the Lake on September 14, 1961, also indicated a very slow dispersion rate because the water mass was identified up to five days. The September 1961 study was made during a period of high winds and still indicated that the mixing rate or dispersion was small. During severe wind conditions and high turbulence the mixing rate might increase.

Under the conditions found during the study period an effluent discharged into the lake would not disperse rapidly after its initial dilution with the lake water. During near calm conditions an effluent field or mass could build up in the vicinity of a diffuser. Although the initial dilution of the effluent may be great upon its discharge, the pollutant concentration will increase in the water surrounding the diffuser unless it is removed by water currents. Movement of the discharged effluent by currents, will not bring about a sufficient dilution of the water mass in a period of several hours. Rather, studies indicate that adequate dispersion may take several days, even during periods of high winds.

Based on the drogue studies it appears that a water mass could not be expected to have a dilution ratio much greater than 1.2 over a period of several hours. If these conditions are nearly typical of the average dispersion rate then an effluent could remain, during calm periods, at its initial state of dilution with lake water for many days.

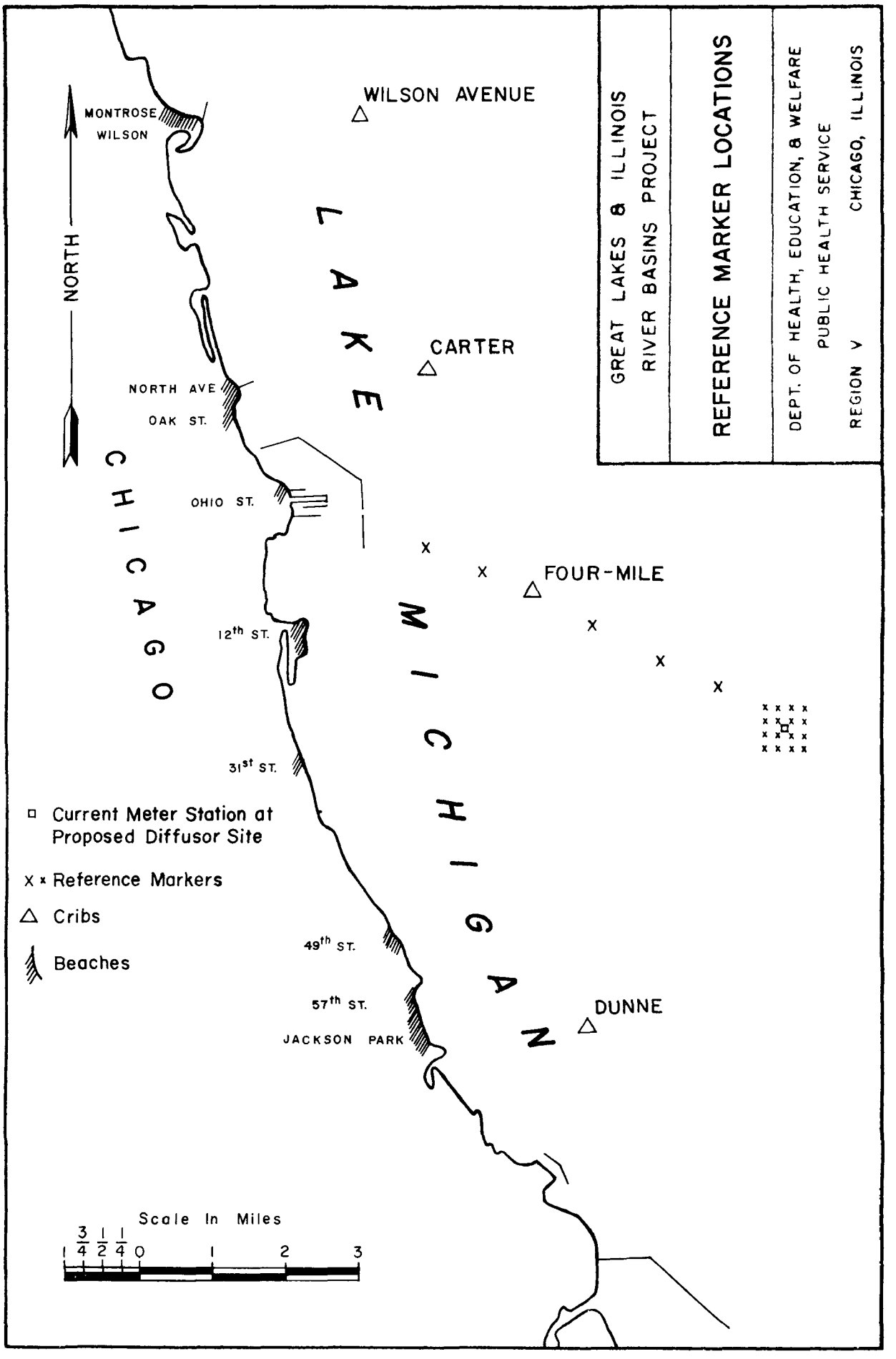
GREAT LAKES & ILLINOIS
RIVER BASINS PROJECT
REFERENCE MARKER LOCATIONS
DEPT. OF HEALTH, EDUCATION, & WELFARE
PUBLIC HEALTH SERVICE
REGION V
CHICAGO, ILLINOIS
NORTH
MONTROSE
WILSON
WILSON AVENUE
LAKE
CARTER
NORTH AVE
OAK ST.
CHICAGO
OHIO ST.
FOUR-MILE
12th ST.
MICHIGAN
31st ST.
Current Meter Station at Proposed Diffusor Site
Reference Markers
Cribs
Beaches
49th ST.
57th ST.
JACKSON PARK
DUNNE
Scale In Miles
3/4 1/2 1/4 0 1 2 3

FIGURE 1

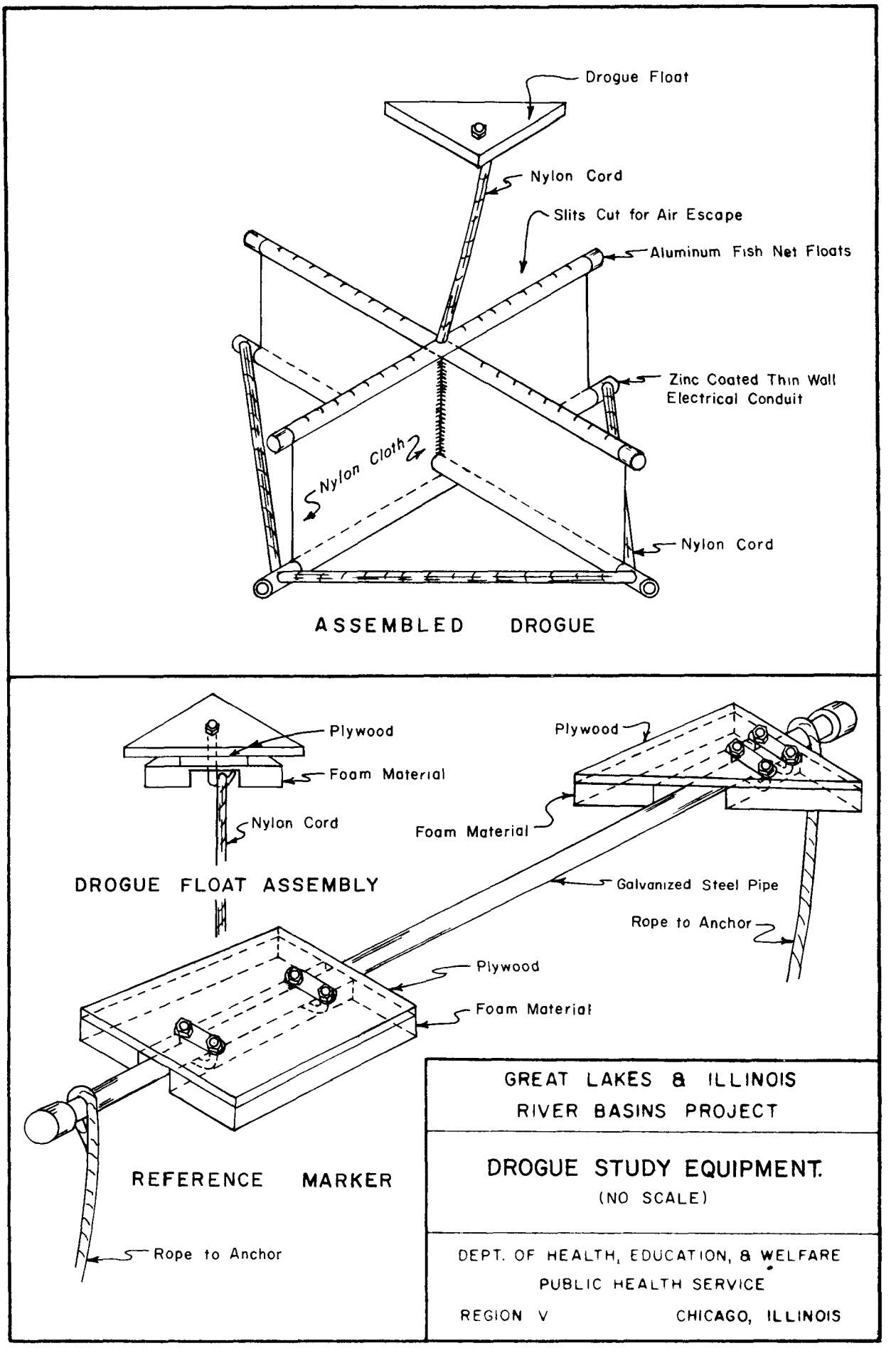
Drogue Float
Nylon Cord
Slits Cut for Air Escape
Aluminum Fish Net Floats
Zinc Coated Thin Wall Electrical Conduit
Nylon Cloth
Nylon Cord
ASSEMBLED DROGUE
Plywood
Foam Material
Nylon Cord
DROGUE FLOAT ASSEMBLY
Plywood
Foam Material
Galvanized Steel Pipe
Rope to Anchor
Plywood
Foam Material
REFERENCE MARKER
Rope to Anchor
GREAT LAKES & ILLINOIS RIVER BASINS PROJECT
DROGUE STUDY EQUIPMENT.
(NO SCALE)
DEPT. OF HEALTH, EDUCATION, & WELFARE
PUBLIC HEALTH SERVICE
REGION V
CHICAGO, ILLINOIS

FIGURE 2

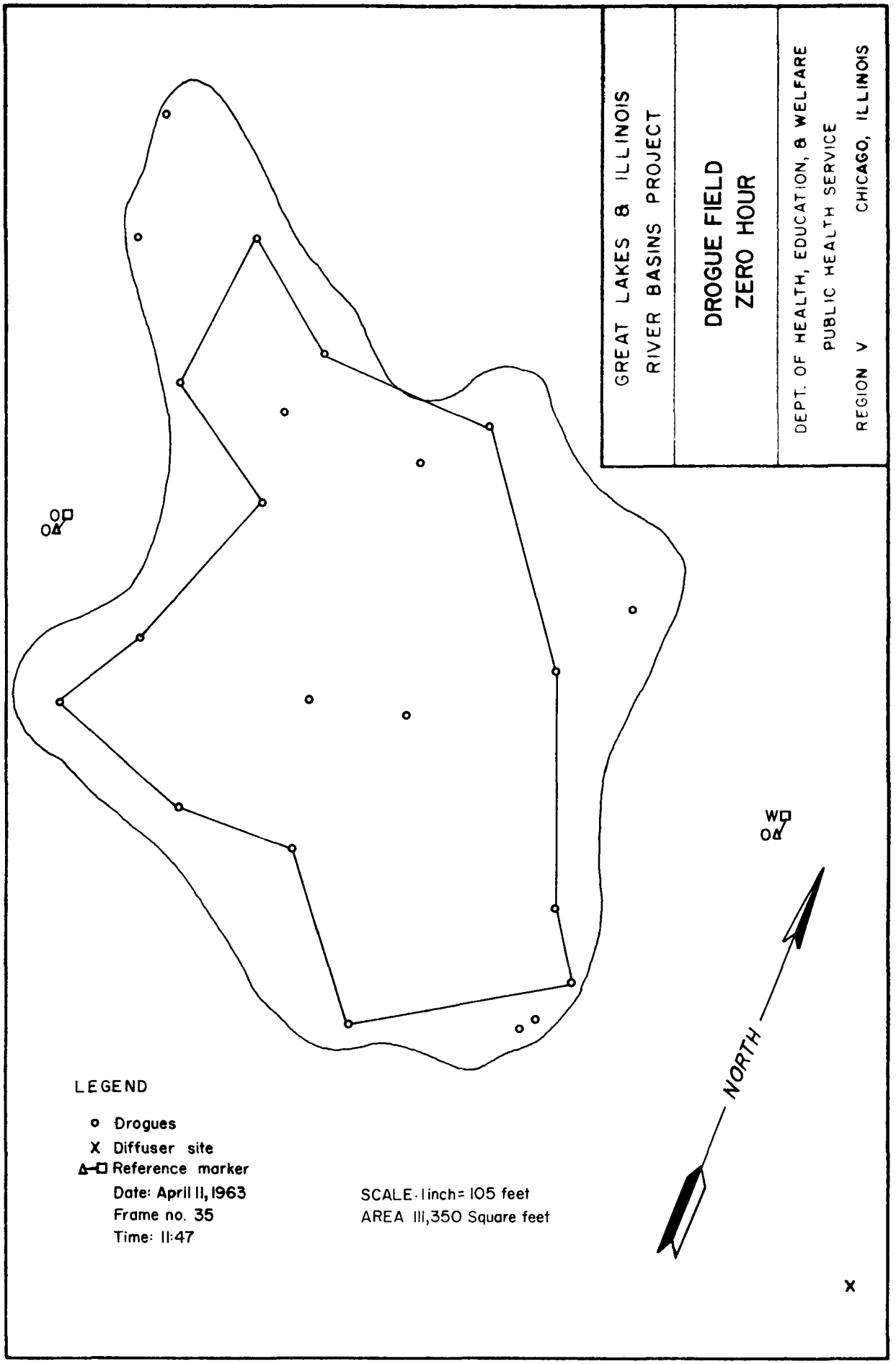
GREAT LAKES & ILLINOIS
RIVER BASINS PROJECT
DROGUE FIELD
ZERO HOUR
DEPT. OF HEALTH, EDUCATION, & WELFARE
PUBLIC HEALTH SERVICE
REGION V
CHICAGO, ILLINOIS
O
O
W
O
NORTH
LEGEND
o Drogues
X Diffuser site
Reference marker
Date: April 11, 1963
Frame no. 35
Time: 11:47
SCALE - 1 inch = 105 feet
AREA 111,350 Square feet
X

FIGURE 3

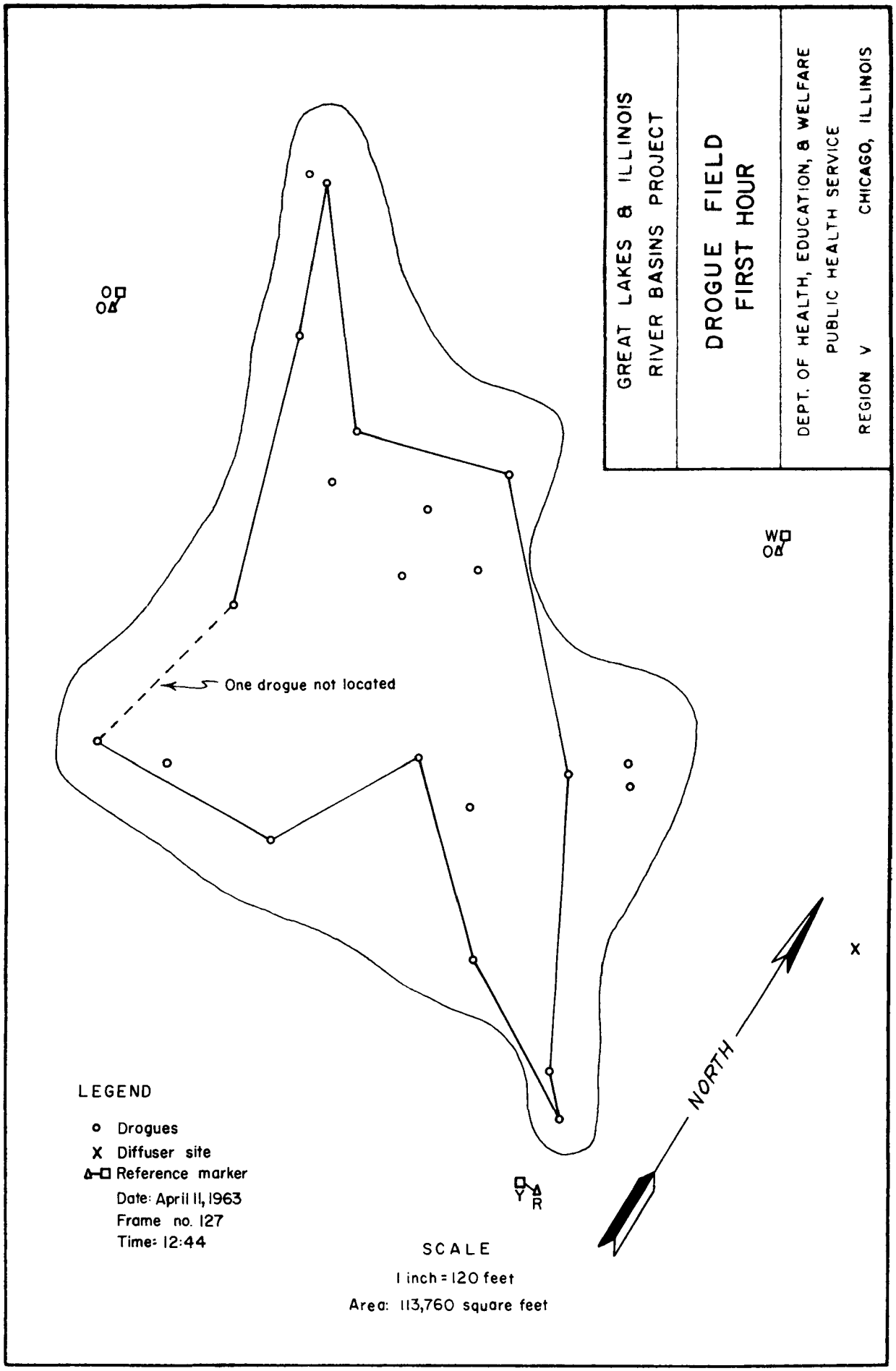
GREAT LAKES & ILLINOIS
RIVER BASINS PROJECT
DROGUE FIELD
FIRST HOUR
DEPT. OF HEALTH, EDUCATION, & WELFARE
PUBLIC HEALTH SERVICE
REGION V
CHICAGO, ILLINOIS
One drogue not located
W
X
NORTH
Y
R
LEGEND
Drogues
X Diffuser site
Reference marker
Date: April 11, 1963
Frame no. 127
Time: 12:44
SCALE
1 inch = 120 feet
Area: 113,760 square feet

FIGURE 4

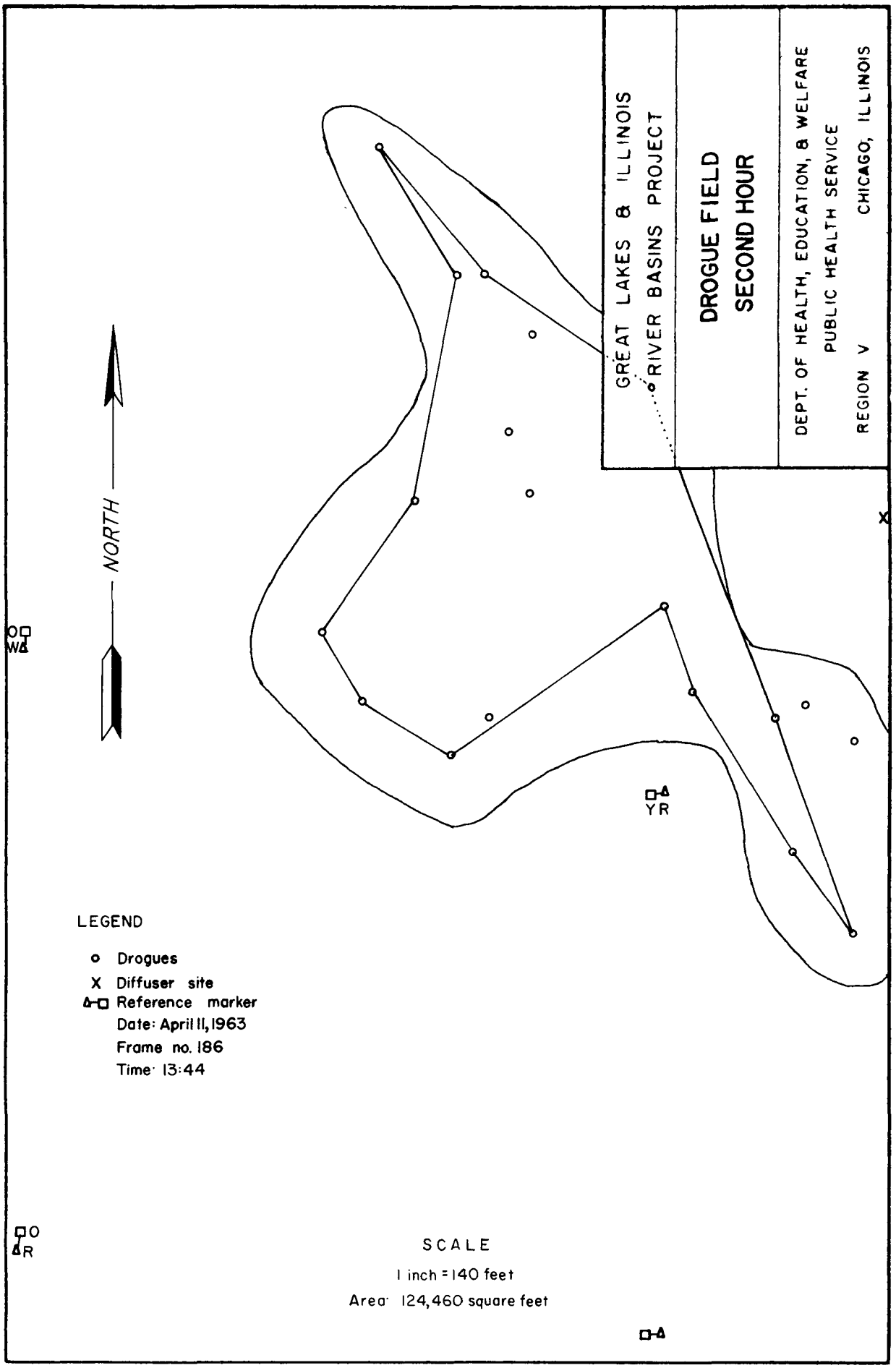
GREAT LAKES & ILLINOIS
RIVER BASINS PROJECT
DROGUE FIELD
SECOND HOUR
DEPT. OF HEALTH, EDUCATION, & WELFARE
PUBLIC HEALTH SERVICE
REGION V
CHICAGO, ILLINOIS
NORTH
W
YR
X
O
R
LEGEND
Drogues
X Diffuser site
Reference marker
Date: April 11, 1963
Frame no. 186
Time: 13:44
SCALE
1 inch = 140 feet
Area: 124,460 square feet

FIGURE 5

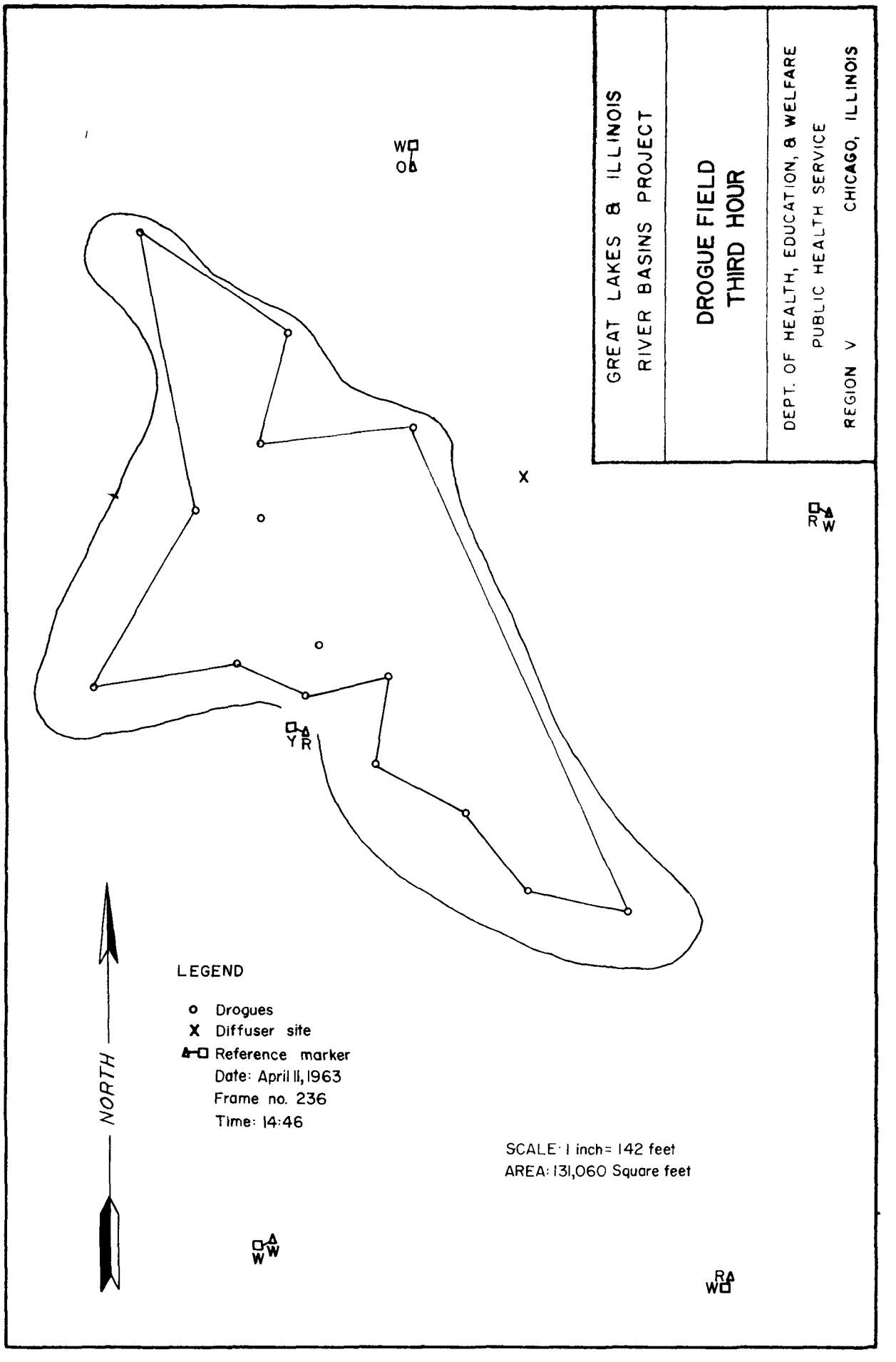
GREAT LAKES & ILLINOIS
RIVER BASINS PROJECT
DROGUE FIELD
THIRD HOUR
DEPT. OF HEALTH, EDUCATION, & WELFARE
PUBLIC HEALTH SERVICE
REGION V
CHICAGO, ILLINOIS
NORTH
LEGEND
Drogues
Diffuser site
Reference marker
Date: April 11, 1963
Frame no. 236
Time: 14:46
SCALE: 1 inch = 142 feet
AREA: 131,060 Square feet

FIGURE 6