DRAFT

DEVELOPMENT DOCUMENT FOR EFFLUENT LIMITATIONS GUIDELINES AND STANDARDS OF PERFORMANCE

MISCELLANEOUS CHEMICALS INDUSTRY

ENVIRONMENTAL PROTECTION AGENCY

FEBRUARY 1975

DRAFT

NOTICE

The attached document is a DRAFT CONTRACTOR'S REPORT. It includes technical information and recommendations submitted by the Contractor to the United States Environmental Protection Agency ("EPA") regarding the subject industry. It is being distributed for review and comment only. The report is not an official EPA publication and it has not been reviewed by the Agency.

The report, including the recommendations, will be undergoing extensive review by EPA, Federal and States agencies, public interest organizations, and other interested groups and persons during the coming weeks. The report and in particular the contractor's recommended effluent limitations guidelines and standards of performance is subject to change in any and all respects.

The regulations to be published by EPA under Section 304 (b) and 306 of the Federal Water Pollution Control Act, as amended, will be based to a large extent on the report and the comments received on it. However, pursuant to Sections 304 (b) and 306 of the Act, EPA will also consider additional pertinent technical and economic information which is developed in the course of review of this report by the public and within EPA. EPA is currently performing an economic impact analysis regarding the subject industry, which will be taken into account as part of the review of the report. Upon completion of the review process, and prior to final promulgation of regulations, an EPA report will be issued setting forth EPA's conclusions concerning the subject industry, effluent limitation guidelines and standards of performance applicable to such industry. Judgments necessary to promulgation of regulations under Sections 304 (b) and 306 of the Act, of course, remain the responsibility of EPA. Subject to these limitations, EPA is making this draft contractor's report available in order to encourage the widest possible participation of interested persons in the decision making process at the earliest possible time.

The report shall have standing in any EPA proceeding or court proceeding only to the extent that it represents the views of the Contractor who studied the subject industry and prepared the information and recommendations. It cannot be cited, referenced, or represented in any respect in any such proceedings as a statement of EPA's views regarding the subject industry.

U. S. Environmental Protection Agency
Office of Water and Hazardous Materials
Effluent Guidelines Division
Washington, D.C. 20460

000R75011

DRAFT

DEVELOPMENT DOCUMENT FOR EFFLUENT LIMITATIONS GUIDELINES AND STANDARDS OF PERFORMANCE

MISCELLANEOUS CHEMICALS INDUSTRY

Protection Agency
7
Street
Illinois 60604

PREPARED BY ROY F. WESTON, INC.
FOR UNITED STATES
ENVIRONMENTAL PROTECTION AGENCY
UNDER CONTRACT NUMBER 68-01-2932

DATED: FEBRUARY 1975

NOTICE

The attached document is a DRAFT CONTRACTOR'S REPORT. It includes technical information and recommendations submitted by the Contractor to the United States Environmental Protection Agency (EPA) regarding the subject industry. It is being distributed for review and comment only. The report is not an official EPA publication and it has not been reviewed by the Agency.

The report, including the recommendations, will be undergoing extensive review by EPA, Federal and State agencies, public interest organizations and other interested groups and persons during the coming weeks. The report and in particular the contractor's recommended effluent limitations guidelines and standards of performance are subject to change in any and all respects.

The regulations to be published by EPA under Sections 304(b) and 306 of the Federal Water Pollution Control Act, as amended, will be based to a large extent on the report and the comments received on it. However, pursuant to Sections 304(b) and 306 of the Act, EPA will also consider additional pertinent technical and economic information which is developed in the course of review of this report by the public and within EPA. EPA is currently performing an economic impact analysis regarding the subject industry, which will be taken into account as part of the review of the report. Upon completion of the review process, and prior to final promulgation of regulations, an EPA report will be issued setting forth EPA's conclusions concerning the subject industry, effluent limitations guidelines and standards of performance applicable to such industry. Judgments necessary to the promulgation of regulations under Sections 304(b) and 306 of the Act, of course, remain the responsibility of EPA. Subject to these limitations, EPA is making this draft contractor's report available in order to encourage the widest possible participation of interested persons in the decision making process at the earliest possible time.

The report shall have standing in any EPA proceeding or court proceeding only to the extent that it represents the views of the Contractor who studied the subject industry and prepared the information and recommendations. It cannot be cited, referenced, or represented in any respect in any such proceedings as a statement of EPA's views regarding the subject industry.

U.S. Environmental Protection Agency
Office of Air and Water Programs
Effluent Guidelines Division
Washington, D.C. 20460

ENVIRONMENTAL PROTECTION AGENCY

ABSTRACT

This document presents the findings of an extensive study of the Miscellaneous Chemicals industry by Roy F. Weston, Inc. for the Environmental Protection Agency, for the purpose of developing effluent limitation guidelines, Federal standards of performance, and pretreatment standards for the industry, to implement Sections 304, 306, and 307 of the Federal Water Pollution Control Act, as amended (33 USC 1251, 1314, and 1316; 86 Stat 816).

Effluent limitation guidelines contained herein set forth the degree of effluent reduction attainable through the application of the best practicable control technology currently available (BPCTCA), which must be achieved by existing point sources by July 1, 1977. The degree of effluent reduction which must be achieved by July 1, 1983 is attainable by application of the best available technology economically achievable (BATEA). The Standards of Performance for new sources contained herein set forth the degree of effluent reduction which is achievable through the appication of the best available demonstrated control technology (BADCT).

The development of data and recommendations in the document relate to the Miscellaneous Chemicals industry, which is divided into eight industrial categories and several subcategories on the basis of the characteristics of the manufacturing processes involved. Separate effluent limitations were developed for each subcategory on the basis of the level of raw waste load as well as on the degree of treatment achievable by suggested model systems. These systems include biological and physical/chemical treatment and systems for reduction in pollutant loads.

Supportive data and the rationale for development of the proposed effluent limitations guidelines and standards of performance are contained in this report.

NOTICE: THESE ARE TENTATIVE RECOMMENDATIONS BASED UPON INFORMATION IN THIS REPORT AND ARE SUBJECT TO CHANGE BASED UPON COMMENTS RECEIVED AND FURTHER INTERNAL REVIEW BY EPA.

TABLE OF CONTENTS

Section		Page
	ABSTRACT	iii
	FIGURES	ix
	TABLES	xii
I	CONCLUSIONS	I-1
II	RECOMMENDATIONS	II-1
III	INTRODUCTION	III-1
	Purpose and Authority	III-1
	Scope of Study	III-3
	Methods Used for Development of the Effluent Limitations and Standards for Performance	III-4
	A. Pharmaceutical Industry	III-8
	B. Gum and Wood Chemicals Industry	III-14
	C. Pesticides and Agricultural Chemicals Industry	III-20
	D. Adhesive and Sealants Industry	III-34
	E. Explosives Industry	III-37
	F. Carbon Black Industry	III-41
	G. Photographic Processing Industry	III-47
	H. Hospitals	III-50
IV	INDUSTRIAL CATEGORIZATION	IV-1
	General	IV-1
	A. Pharmaceutical Industry	IV-2
	B. Gum and Wood Chemicals Industry	IV-36
	C. Pesticides and Agricultural Chemicals Industry	IV-58
	D. Adhesive and Sealants Industry	IV-96
	E. Explosives Industry	IV-113
	F. Carbon Black Industry	IV-136
	G. Photographic Processing Industry	IV-145
	H. Hospitals	IV-155

TABLE OF CONTENTS
(Continued)

Section		Page
V	WASTE CHARACTERIZATION	V-1
	General	V-1
	A. Pharmaceutical Industry	V-2
	B. Gum and Wood Chemicals Industry	V-25
	C. Pesticides and Agricultural Chemicals Industry	V-32
	D. Adhesive and Sealants Industry	V-52
	E. Explosives Industry	V-63
	F. Carbon Black Industry	V-77
	G. Photographic Processing Industry	V-78
	H. Hospitals	V-80
VI	SELECTION OF POLLUTANT PARAMETERS	VI-1
	General	VI-1
	Pollutants of Significance	VI-1
	Pollutants of Limited Significance	VI-8
	Pollutants of Specific Significance	VI-23
	A. Pharmaceutical Industry	VI-24
	B. Gum and Wood Chemicals Industry	VI-26
	C. Pesticides and Agricultural Chemicals Industry	VI-28
	D. Adhesive and Sealants Industry	VI-30
	E. Explosives Industry	VI-31
	F. Carbon Black Industry	VI-32
	G. Photographic Processing Industry	VI-33
	H. Hospitals	VI-34
VII	CONTROL AND TREATMENT TECHNOLOGIES	VII-1
	General	VII-1
	A. Pharmaceutical Industry	VII-2
	B. Gum and Wood Chemicals Industry	VII-20
	C. Pesticides and Agricultural Chemicals Industry	VII-29
	D. Adhesive and Sealants Industry	VII-36
	E. Explosives Industry	VII-43
	F. Carbon Black Industry	VII-54
	G. Photographic Processing Industry	VII-58
	H. Hospitals	VII-68

TABLE OF CONTENTS
(Continued)

Section		Page
VIII	COST, ENERGY, AND NON-WATER QUALITY ASPECTS	VIII-1
	General	VIII-1
	A. Pharmaceutical Industry	VIII-4
	B. Gum and Wood Chemicals Industry	VIII-31
	C. Pesticides and Agricultural Chemicals Industry	VIII-45
	D. Adhesive and Sealants Industry	VIII-71
	E. Explosives Industry	VIII-91
	F. Carbon Black Industry	VIII-104
	G. Photographic Processing Industry	VIII-110
	H. Hospitals	VIII-118
IX	BEST PRACTICABLE CONTROL TECHNOLOGY CURRENTLY AVAILABLE (BPCTCA)	IX-1
	General	IX-1
	A. Pharmaceutical Industry	IX-2
	B. Gum and Wood Chemicals Industry	IX-5
	C. Pesticides and Agricultural Chemicals Industry	IX-9
	D. Adhesive and Sealants Industry	IX-13
	E. Explosives Industry	IX-16
	F. Carbon Black Industry	IX-19
	G. Photographic Processing Industry	IX-22
	H. Hospitals	IX-24
X	BEST AVAILABLE TECHNOLOGY ECONOMICALLY ACHIEVABLE	X-1
	General	X-1
	A. Pharmaceutical Industry	X-2
	B. Gum and Wood Chemicals Industry	X-5
	C. Pesticides and Agricultural Chemicals Industry	X-7
	D. Adhesive and Sealants Industry	X-9
	E. Explosives Industry	X-12
	F. Carbon Black Industry	X-14
	G. Photographic Processing Industry	X-16
	H. Hospitals	X-18

TABLE OF CONTENTS
(Continued)

Section		Page
XI	NEW SOURCE PERFORMANCE STANDARDS	XI-1
	General	XI-1
	A. Pharmaceutical Industry	XI-2
	B. Gum and Wood Chemicals Industry	XI-4
	C. Pesticides and Agricultural Chemicals Industry	XI-6
	D. Adhesive and Sealants Industry	XI-8
	E. Explosives Industry	XI-10
	F. Carbon Black Industry	XI-12
	G. Photographic Processing Industry	XI-13
	H. Hospitals	XI-15
XII	PRETREATMENT GUIDELINES	XII-1
	General	XII-1
	A. Pharmaceutical Industry	XII-2
	B. Gum and Wood Chemicals Industry	XII-5
	C. Pesticides and Agricultural Chemicals Industry	XII-7
	D. Adhesive and Sealants Industry	XII-8
	E. Explosives Industry	XII-11
	F. Carbon Black Industry	XII-12
	G. Photographic Processing Industry	XII-13
	H. Hospitals	XII-14
XIII	PERFORMANCE FACTORS FOR TREATMENT PLANT OPERATIONS	XIII-1
	General	XIII-1
	A. Pharmaceutical Industry	XIII-3
	B. Gum and Wood Chemicals Industry	XIII-7
	C. Pesticides and Agricultural Chemicals Industry	XIII-9
	D. Adhesive and Sealants Industry	XIII-10
	E. Explosives Industry	XIII-11
	F. Carbon Black Industry	XIII-12
	G. Photographic Processing Industry	XIII-13
	H. Hospitals	XIII-15
XIV	ACKNOWLEDGEMENTS	XIV-1

TABLE OF CONTENTS
(Continued)

Section		Page
XV	BIBLIOGRAPHY	XV-1
	A. Pharmaceutical Industry	XV-1
	B. Gum and Wood Chemicals Industry	XV-5
	C. Pesticides and Agricultural Chemicals Industry	XV-6
	D. Adhesive and Sealants Industry	XV-10
	E. Explosives Industry	XV-11
	F. Carbon Black Industry	XV-19
	G. Photographic Processing Industry	XV-20
	H. Hospitals	XV-22
XVI	GLOSSARY	XVI-1
	A. Pharmaceutical Industry	XVI-1
	B. Gum and Wood Chemicals Industry	XVI-7
	C. Pesticides and Agricultural Chemicals Industry	XVI-11
	D. Adhesive and Sealants Industry	XVI-14
	E. Explosives Industry	XVI-16
	F. Carbon Black Industry	XVI-18
	G. Photographic Processing Industry	XVI-19
	H. Hospitals	XVI-20

LIST OF FIGURES

Figures	Title	Page
IIA-1	Category A - BPCTCA Effluent Limitations Versus Production	II-4
IIA-2	Category A - BATEA Effluent Limitations Versus Production	II-5
IIA-3	Category A - BADCT Effluent Limitations Versus Production	II-6
IIIA-1	Shipments of Pharmaceutical Preparations by Census Regions, Divisions and States; 1967	III-13
IIIB-1	Interrelationships of Present Gum and Wood Chemicals Industry	III-17
IIIC-1	Locations of Pesticides Production Plants	III-33
IIIF-1	U.S. Carbon Black Production by Process	III-45
IVA-1	Typical Fermentation Process	IV-13
IVA-2	Typical Fermentation Process	IV-14
IVA-3	Typical Vaccine Production Process	IV-17
IVA-4	Closed Cooling Water System	IV-20
IVA-5	Typical Chemical Synthesis Process	IV-22
IVA-6	Typical Chemical Synthesis Process (Antibiotic Manufacture)	IV-23
IVA-7	Typical Pharmaceutical Formulation Process	IV-26
IVB-1	Char and Charcoal Briquet Manufacturing	IV-47
IVB-2	Gum Rosin and Turpentine Production	IV-49
IVB-3	Wood Rosin, Pine Oil, and Turpentine Production via Solvent Extraction	IV-50
IVB-4	Crude Tall Oil Fractionation and Refining	IV-52

LIST OF FIGURES
(continued)

Figures	Title	Page
IVB-5	Distillation and Refining of Essential Oils	IV-54
IVB-6	Rosin Derivatives Manufacture	IV-56
IVC-1	General Process Flow Diagram for DDT and Related Compounds Production Facilities	IV-64
IVC-2	General Process Flow Diagram for Halogenated Phenol Production Facilities	IV-66
IVC-3	General Process Flow Diagram of Aryloxyalkanoic Acid Production Facilities	IV-67
IVC-4	General Process Flow Diagram for Aldrin-Toxaphene Production Facilities	IV-69
IVC-5	General Process Flow Diagram for Halogenated Aliphatic Hydrocarbon Production Facilities	IV-71
IVC-6	General Process Flow Diagram for Halogenated Aliphatic Acid Production Facilities	IV-72
IVC-7	General Process Flow Diagram for Phosphates and Phosphonates Pesticide Production Facilities	IV-74
IVC-8	General Process Flow Diagram for Phosphorothioate and Phosphorodithioate Production Facilities	IV-75
IVC-9	General Process Flow Diagram for Aryl and Alkyl Carbamate Production Facilities	IV-78
IVC-10	General Process Flow Diagram for Thiocarbamate Production Facilities	IV-79
IVC-11	General Process Flow Diagram for Amide and Amine Production Facilities	IV-81
IVC-12	General Process Flow Diagram for Urea and Uracils Production Facilities	IV-82
IVC-13	General Process Flow Diagram for S-Triazine Production Facilities	IV-84

LIST OF FIGURES
(continued)

Figure	Title	Page
IVC-14	General Process Flow Diagram for Nitro-Type Pesticides	IV-86
IVC-15	General Process Flow Diagram for Arsenic-Type Metallo-Organic Production	IV-88
IVC-16	General Process Flow Diagram for Certain Dithiocarbamate Metallo-Organic Production	IV-90
IVC-17	Liquid Formation Unit	IV-92
IVD-1	Animal Glue Manufacturing Batch Process Flow Chart	IV-106
IVD-2	Animal Glue and Gelatin Flow Chart from Raw Materials to Products and By-Products	IV-108
IVD-3	Batch Adhesive Manufacturing Process Flow Chart	IV-109
IVD-4	Formaldehyde-Resin Batch Manufacturing Process Flow Chart	IV-110
IVE-1	Typical Nitroglycerin Production Schematic	IV-118
IVE-2	Typical Ammonium Nitrate Production Schematic	IV-120
IVE-3	Typical TNT Production Schematic	IV-122
IVE-4	Typical Schematic for RDX HMX Production	IV-124
IVE-5	Nitrocellulose Powder Production Schematic	IV-126
IVE-6	Solvent Propellant Production Schematic	IV-127
IVE-7	Typical PETN Production and Acetone Recovery Schematic	IV-131
IVE-8	Typical Lead Azide Production Schematic	IV-132
IVE-9	Typical Nitromanite or Isosorbide Dinitrate Production Schematic	IV-134

LIST OF FIGURES
(continued)

Figures	Title	Page
IVE-10	Typical Lead Mononitroresorcinate Production Schematic	IV-135
IVF-1	Process Flow Sheet - Furnace Black Process	IV-142
IVF-2	Simplified Flow Sheet - Thermal Black Process	IV-144
IVG-1	Black and White Film Processing	IV-148
IVG-2	Black and White Film Processing	IV-149
IVG-3	Color Film Processing	IV-150
IVG-4	Color Reversal Processing (Incorporated Couplers)	IV-152
IVG-5	Color Reversal Processing (Couplers in Developer)	IV-154
VA-1	Category A - BOD_5 Raw Waste Load Vs. Production	V-9
VA-2	Category A - COD Raw Waste Load Vs. Production	V-10
VA-3	Category A - TOC Raw Waste Load Vs. Production	V-11
VA-4	Category A - Pollutant Waste Load Vs. Flow Raw Waste Load	V-14
VA-5	Category B - Pollutant Waste Load Vs. Flow Raw Waste Load	V-15
VA-6	Category C - Pollutant Waste Load Vs. Flow Raw Waste Load	V-16
VA-7	Category D - Pollutant Waste Load Vs. Flow Raw Waste Load	V-18
VA-8	Category E - Pollutant Waste Load Vs. Flow Raw Waste Load	V-19
VE-1	Subcategory A1 - Explosive Manufacture - Pollutant RWL Vs. Raw Waste Flow	V-71

LIST OF FIGURES
(continued)

Figures	Title	Page
VE-2	Subcategory A2 - Propellant Manufacture - Pollutant RWL Vs. Raw Waste Flow	V-72
VE-2	Subcategory B - Load and Pack - Pollutant RWL Vs. Raw Waste Flow	V-73
VE-4	Subcategory C - Specialty Manufacture - Pollutant RWL Vs. Raw Waste Flow	V-74
VH-1	Pollutant Raw Waste Load Vs. Flow Raw Waste Load	V-84
VIIA-1	Barometric Condenser	VII-5
VIID-1	Plywood Plant Glue Washwater Reuse System	VII-39
VIIIA-1	Pharmaceutical Industry - BPCTCA Cost Model Subcategories A, B, C_1, D and E	VIII-5
VIIIA-2	Pharmaceutical Industry - BPCTCA Cost Model - Subcategory C_2	VIII-11
VIIIA-3	Pharmaceutical Industry - BATEA Cost Model - Subcategories A and C_1	VIII-15
VIIIA-4	Pharmaceutical Industry - BADCT Cost Model - Subcategories A, B, C, D, and E	VIII-18
VIIIB-1	Gum and Wood Chemicals Industry - BPCTCA Cost Model	VIII-32
VIIIB-2	Gum and Wood Chemicals Industry - BATEA Cost Model	VIII-36
VIIIC-1	Pesticides and Agricultural Chemicals Industry BPCTCA Cost Model - Subcategory A	VIII-46
VIIIC-2	Pesticides and Agricultural Chemicals Industry BPCTCA Cost Model - Subcategory B	VIII-47
VIIIC-3	Pesticides and Agricultural Chemicals Industry BPCTCA Cost Model - Subcategory C	VIII-48
VIIIC-4	Pesticides and Agricultural Chemicals Industry BPCTCA Cost Model - Subcategory D	VIII-49

LIST OF FIGURES
(continued)

Figures	Title	Page
VIIIC-5	Pesticides and Agricultural Chemicals Industry BPCTCA Cost Model - Subcategory E (Water Based)	VIII-50
VIIIC-6	General Wastewater Treatment Cost Model for Multi-Media Filtration and Activated Carbon Adsorption	VIII-57
VIIIC-7	Pesticides and Agricultural Chemicals Industry BPCTCA Cost Model	VIII-59
VIIID-1	Adhesive and Sealants Industry - BPCTCA Cost Model (Subcategory A)	VIII-72
VIIID-2	Adhesive and Sealants Industry - BPCTCA Cost Model (Subcategories B and C)	VIII-77
VIIID-3	Adhesive and Sealants Industry - BATEA Cost Model (Subcategory A)	VIII-80
VIIID-4	Adhesive and Sealants Industry - BADCT Cost Model (Subcategory A)	VIII-83
VIIIE-1	Cost Model - Explosives Industry - BPCTCA Waste Treatment Model	VIII-94
VIIIE-2	Explosives Industry - BATEA Cost Model	VIII-97
VIIIF-1	Carbon Black Industry - BPCTCA Cost Model	VIII-105
VIIIF-2	BATEA Waste Treatment Model	VIII-106
VIIIF-3	Carbon Black Industry - BADCT Cost Model	VIII-107
VIIIG-1	Photographic Processing Industry - BPCTCA Cost Model	VIII-111
VIIIG-2	Photographic Processing Industry - BATEA Cost Model	VIII-114
VIIIH-1	Hospitals - BPCTCA Cost Model	VIII-119
VIIIH-2	BADCT and BATEA Cost Model - Hospitals	VIII-122

LIST OF TABLES

Table No.	Title	Page
IA-1	Summary Table - Pharmaceutical Industry	I-7
IB-1	Summary Table - Gum and Wood Chemicals Industry	I-10
IC-1	Summary Table - Pesticides and Agricultral Chemicals Industry	I-13
ID-1	Summary Table - Adhesive and Sealants Industry	I-18
IE-1	Summary Table - Explosives Industry	I-21
IF-1	Summary Table - Carbon Black Industry	I-23
IG-1	Summary Table - Photographic Processing Industry	I-26
IH-1	Summary Table - Hospital	I-29
IIA-1	BPCTCA Effluent Limitations Guidelines - Pharmaceutical Industry	II-7
IIA-2	BATEA Effluent Limitations Guidelines - Pharmaceutical Industry	II-8
IIA-3	BADCT Effluent Limitations Guidelines - Pharmaceutical Industry	II-9
IIB-1	BPCTCA Effluent Limitations Guidelines - Gum and Wood Chemicals Industry	II-11
IIB-2	BATEA Effluent Limitations Guidelines - Gum and Wood Chemicals Industry	II-12
IIB-3	BADCT Effluent Limitations Guidelines - Gum and Wood Chemicals Industry	II-13
IIC-1	BPCTCA Effluent Limitations Guidelines - Pesticides and Agricultural Chemicals Industry	II-15
IIC-2	BATEA Effluent Limitations Guidelines - Pesticides and Agricultural Chemicals Industry	II-16
IIC-3	BADCT Effluent Limitations Guidelines - Pesticides and Agricultural Chemicals Industry	II-17

LIST OF TABLES
(continued)

Table No.	Title	Page
IID-1	BPCTCA Effluent Limitations Guidelines - Adhesive and Sealants Industry	II-19
IID-2	BATEA Effluent Limitations Guidelines - Adhesive and Sealants Industry	II-20
IID-3	BADCT Effluent Limitations Guidelines - Adhesive and Sealants Industry	II-21
IIE-1	BPCTCA Effluent Limitations Guidelines - Explosives Industry	II-23
IIE-2	BATEA Effluent Limitations Guidelines - Explosives Industry	II-24
IIE-3	BADCT Effluent Limitations Guidelines - Explosives Industry	II-25
IIE-1	BPCTCA Effluent Limitations Guidelines - Carbon Black Industry	II-27
IIF-2	BATEA and BADCT Effluent Limitations Guidelines - Carbon Black Industry	II-28
IIG-1	BPCTCA Effluent Limitations Guidelines - Photographic Processing Industry	II-30
IIG-2	BATEA and BADCT Effluent Limitations Guidelines - Photographic Processing Industry	II-31
IIH-1	BPCTCA, BADCT and BATEA Effluent Limitations Guidelines - Hospitals	II-33
IIIA-1	Biological Products - SIC 2831	III-9
IIIA-2	Medicinal Chemicals and Botanical Products - SIC 2833	III-10
IIIA-3	Pharmaceutical Products - SIC 2834	III-11
IIIB-1	Chemicals Listed Under SIC 2861	III-15
IIIB-2	Production and Product Value Gum and Wood Chemicals Industry	III-19

LIST OF TABLES
(continued)

Table No.	Title	Page
IIIC-1	Products Covered	III-21
IIIC-2	U.S. Pesticides Production by Classes (1969-1972)	III-22
IIIC-3	Pesticides Classification	III-25
IIIC-4	Structural Chemistry of Typical and Major Pesticides	III-26
IIID-1	Standard Industrial Classification of Products from the Adhesives and Sealants Industry	III-35
IIID-2	Production and Product Value Adhesive and Sealant Industry	III-36
IIIE-1	Explosives Products - SIC 2892	III-38
IIIE-2	Major Operations at Major Ammunition Plants	III-40
IIIF-1	Domestic Sales of Carbon Black in the United States	III-46
IIIG-1	Photographic Studies, Portrait - SIC 7221	III-48
IIIG-2	Commercial Photography, Art, and Graphics - SIC 7333	III-48
IIIG-3	Photofinishing Laboratories - SIC 7395	III-48
IIIG-4	Services Allied to Motion Picture Production - SIC 7819	III-48
IVA-1	Flowsheet of Protein Fractionation of Plasma	IV-15
IVB-1	Statistics by Geographical Areas Gum and Wood Chemicals Industry	IV-40
IVB-2	Comparison of Raw Waste Loads by Product Grouping	IV-42
IVB-3	Factors Considered for Basis of Gum and Wood Chemicals Industry Subcategorization	IV-43

LIST OF TABLES
(continued)

Table No.	Title	Page
IVD-1	Principal Raw Materials Used in Adhesive and Sealants Manufacturing	IV-98
IVE-1	Common Ingredients of Dynamites	IV-121
IVE-2	Ingredients of Water Gels and Slurries	IV-129
VA-1	Pharmaceutical Industry - Raw Waste Loads	V-8
VA-2	Comparison of RWL Data - Pharmaceutical Industry	V-21
VB-1	Effect of Process Modification	V-28
VB-2	Gum and Wood Chemicals - Major BPCTCA Raw Waste Loads	V-30
VD-1	Characterization of Waste Discharge - Adhesive and Sealants Industry, Category A	V-54
VD-2	Characterization of Waste Discharges - Subcategory B	V-55
VD-3	Characterization of Waste Discharge - Subcategory C	V-55
VD-4	Raw Waste Loads - Adhesive and Sealants Industry	V-58
VD-5	Raw Waste Loads - Adhesive and Sealants Industry	V-59
VD-6	Raw Waste Load Variability - Adhesive and Sealants, Subcategory B	V-61
VE-1	Raw Waste Loads - Explosives Industry	V-66
VE-2	Raw Waste Loads - Explosives Industry	V-67
VE-3	Concentration of Pollutants - Explosives Industry	V-68
VF-1	Raw Waste Loads - Carbon Black Industry	V-77
VG-1	Raw Waste Loads - Photographic Processing Industry	V-79
VH-1	Raw Waste Loads - Hospitals	V-81

LIST OF TABLES
(continued)

Table No.	Title	Page
VI-1	Miscellaneous Chemicals Industry List of Pollutants to be Examined	VI-2
VIIA-1	Treatment Technology Survey Pharmaceutical Industry	VII-9
VIIA-2	Summary of Statistical Analysis of Historical Treatment Data - Pharmaceutical Industry	VII-11
VIIA-3	Treatment Plant Survey Data - Pharmaceutical Industry	VII-13
VIIA-4	Summary of COD Carbon Isotherm Tests Performed on Biological Treatment Plant Effluent - Pharmaceutical Industry	VII-15
VIIA-5	Summary of BOD_5 Carbon Isotherm Tests Performed on Biological Treatment Plant Effluent - Pharmaceutical Industry	VII-16
VIIA-6	Summary of TOC Carbon Isotherm Tests Performed on Biological Treatment Plant Effluent - PHarmaceutical Industry	VII-17
VIIA-7	Results of Filtration Tests on Biological Treatment Plant Effluent - Pharmaceutical Industry	VII-19
VIIB-1	Treatment Technology Survey - Gum and Wood Chemicals Study	VII-21
VIIB-2	Treatment Plant Survey Data - Gum and Wood Chemicals Industry	VII-23
VIIB-3	Historic Treatment Plant Performance Gum and Wood Chemicals Industry	VII-24
VIIB-4	Summary of COD Carbon Isotherm Data - Gum and Wood Industry	VII-27
VIIC-1	Treatment Technology Survey - Pesticides and Agricultural Chemicals Industry	VII-33
VIIC-2	Effluent Quality Data From Selected Pesticide Production Facilities - Pesticide and Agricultural Chemicals Industry	VII-34

LIST OF TABLES
(continued)

Table	Title	Page
VIIC-3	Source of Historical Data - RWL Pesticide and Agricultural Chemicals Industry	VII-35
VIIE-1	Summary of Treatment Investigations Explosives Industry	VII-48
VIIF-1	Treatment Technology Survey Carbon Black Industry	VII-55
VIIF-2	Wastewater Treatment Plant Performance Data Carbon Black Industry	VII-56
VIIG-1	Summation of Ozonation Results (G-11) Photographic Processing Industry	VII-65
VIIG-2	Feasibility of Treating Photographic Processing Chemicals with Activated Carbon (G-11) Photographic Processing Industry	VII-66
VIIH-1	Treatment Technology Survey - Hospitals	VII-69
VIIH-2	Summary of Historic Treatment Performance Hospitals	VII-70
VIIH-3	Survey Data - Wastewater Treatment Plant Hospitals	VII-71

LIST OF TABLES

Table No.	Title	Page
VIIIA-1	BPCTCA Waste Treatment Cost Models	VIII-6
VIIIA-2	BPCTCA Cost Model Design Summary Pharmaceutical Industry Subcategories A, B, C_1, C_2, D and E	VIII-7
VIIIA-3	BPCTCA End-of-Pipe Treatment System Requirements Pharmaceutical Industry Subcategories A, B, C_1, C_2, D and E	VIII-10
VIIIA-4	BPCTCA End-of-Pipe Treatment System Design Summary Pharmaceutical Industry Subcategory C_2	VIII-12
VIIIA-5	BATEA Cost Model Design Summary Pharmaceutical Industry Subcategories A, B, C_1, D and E	VIII-16
VIIIA-6	BADCT Treatment System Design Summary Pharmaceutical Industry Subcategories A, B, C_1, D and E	VIII-19
VIIIA-7	Wastewater Treatment Costs for BPCTCA, BADCT and BATEA Effluent Limitations (ENR 1780 - August, 1972 Costs) Pharmaceutical Industry - Subcategory A	VIII-21
VIIIA-8	Wastewater Treatment Costs for BPCTCA, BADCT and BATEA Effluent Limitations (ENR 1780 - August, 1972 Costs) Pharmaceutical Industry - Subcategory B	VIII-22
VIIIA-9	Wastewater Treatment Costs for BPCTCA, BADCT and Effluent Limitations (ENR 1780 - August, 1972 Costs) Pharmaceutical Industry - Subcategory C_1	VIII-23
VIIIA-10	Wastewater Treatment Costs for BPCTCA, BADCT and BATEA Effluent Limitations (ENR 1780 - August, 1972 Costs) Pharmaceutical Industry - Subcategory C_2	VIII-24

LIST OF TABLES
(Continued)

Table No.	Title	Page
VIIIA-11	Wastewater Treatment Costs for BPCTCA, BADCT and BATEA Effluent Limitations (ENR 1780 - August, 1972 Costs) Pharmaceutical Industry - Subcategory D	VIII-25
VIIIA-12	Wastewater Treatment Costs for BPCTCA, BADCT and BATEA Effluent Limitations (ENR 1780 - August, 1972 Costs) Pharmaceutical Industry - Subcategory E	VIII-26
VIIIA-13	Per Gallon Capital and Yearly Operation and Maintenance Costs for the Pharmaceutical Industry Model Treatment Plants	VIII-28
VIIIB-1	BPCTCA Treatment System Design Summary Gum and Wood Chemicals Industry	VIII-33
VIIIB-2	BATEA End-of-Pipe Treatment System Design Summary	VIII-37
VIIIB-3	Wastewater Treatment Costs for BPCTCA, BADCT and BATEA Effluent Limitations (ENR 1780 - August, 1972 Costs) Gum Turpentine and Rosin - Subcategory B	VIII-39
VIIIB-4	Wastewater Treatment Costs for BPCTCA, BADCT and BATEA Effluent Limitations (ENR 1780 - August, 1972 Costs) Wood Turpentine and Rosin - Subcategory C	VIII-40
VIIIB-5	Wastewater Treatment Costs for BPCTCA, BADCT and BATEA Effluent Limitations (ENR 1780 - August, 1972 Costs) Tall Oil Fractionation - Subcategory D	VIII-42
VIIIB-6	Wastewater Treatment Costs for BPCTCA, BADCT and BATEA Effluent Limitations (ENR 1780 - August, 1972 Costs) Essential Oil - Subcategory E	VIII-43

LIST OF TABLES
(Continued)

Table No.	Title	Page
VIIIB-7	Wastewater Treatment Costs for BPCTCA, BADCT and BATEA Effluent Limitations (ENR 1780 - August, 1972 Costs) Rosin Derivatives - Subcategory F	VIII-44
VIIIC-1	BPCTCA Treatment System Design Summary Pesticides and Agricultural Chemicals Industry	VIII-51
VIIIC-2	BATEA Treatment System Design Summary	VIII-58
VIIIC-3	BADCT Treatment System Design Summary	VIII-60
VIIIC-4	Wastewater Treatment Costs for BPCTCA, BADCT and BATEA Effluent Limitations (ENR 1780 - August, 1972 Costs) Pesticides and Agricultural Chemicals Industry - Halogenated Organic Subcategory: Typical Small Plant	VIII-63
VIIIC-5	Wastewater Treatment Costs for BPCTCA, BADCT and BATEA Effluent Limitations (ENR 1780 - August, 1972 Costs) Pesticides and Agricultural Chemicals Industry - Halogenated Organic Subcategory: Typical Large Plant	VIII-64
VIIIC-6	Wastewater Treatment Costs for BPCTCA, BADCT and BATEA Effluent Limitations (ENR 1780 - August, 1972 Costs) Pesticides and Chemicals Industry Organo Phosphorus Subcategory: Typical Small Plant	VIII-65
VIIIC-7	Wastewater Treatment Costs for BPCTCA, BADCT and BATEA Effluent Limitations (ENR 1780 - August, 1972 Costs) Pesticides and Agricultural Chemicals Industry Organo Phosphorus Subcategory: Typical Large Plant	VIII-66
VIIIC-8	Wastewater Treatment Costs for BPCTCA, BADCT and BATEA Effluent Limitations (ENR 1780 - August, 1972 Costs) Pesticide and Agricultural Chemicals Industry Organo Nitrogen Subcategory: Typical Small Plant	VIII-67

LIST OF TABLES
(Continued)

Table No.	Title	Page
VIIIC-9	Wastewater Treatment Costs for BPCTCA, BADCT and BATEA Effluent Limitations (ENR 1780 - August, 1972 Costs) Pesticides and Agricultural Chemicals Industry - Organo Nitrogen Subcategory: Typical Large Plant	VIII-68
VIIIC-10	Wastewater Treatment Costs for BPCTCA, BADCT and BATEA Effluent Limitations (ENR 1780 - August, 1972 Costs) Pesticides and Agricultural Chemicals Industry - Metallo-Organic Subcategory	VIII-69
VIIIC-11	Wastewater Treatment Costs for BPCTCA, BADCT and BATEA Effluent Limitations (ENR 1780 - August, 1972 Costs) Pesticides and Agricultural Chemicals Industry - Formulators/Packagers Subcategory	VIII-70
VIIID-1	BPCTCA Treatment System Design Summary Adhesives and Sealants Industry Subcategory A	VIII-73
VIIIB-2	BPCTCA Treatment System Design Summary Adhesive and Sealants Industry Subcategories B and C	VIII-78
VIIID-3	BPCTCA End-of-Pipe Treatment System Requirements - Adhesives and Sealants Industry Subcategories B and C	VIII-79
VIIID-4	BATEA Treatment System Design Summary Adhesives and Sealants Industry Subcategory A	VIII-81
VIIID-5	BATEA End-of-Pipe Treatment System Requirements - Adhesives and Sealants Industry Subcategory A	VIII-82
VIIID-6	BADCT Treatment System Design Summary Adhesives and Sealants Industry Subcategory A	VIII-84

LIST OF TABLES
(continued)

Table	Title	Page
VIIID-7	BADCT End-of-Pipe Treatment Systems Requirements Adhesives and Sealants Industry Subcategory A	VIII-85
VIIID-8	Wastewater Treatment Costs for BPCTCA, BADCT and BATEA Effluent Limitations (ENR 1780 - August, 1972 Costs) Adhesive and Sealants Industry Subcategory A	VIII-87
VIIID-9	Wastewater Treatment Costs for BPCTCA, BADCT and BATEA Effluent Limitations (ENR 1780 - August, 1972 Costs) Adhesive and Sealants Industry Subcategory B	VIII-88
VIIID-10	Wastewater Treatment Costs for BPCTCA, BADCT and BATEA Effluent Limitations (ENR 1780 - August, 1972 Costs) Adhesive and Sealants Industry Subcategory C	VIII-89
VIIIE-1	BPCTCA Treatment System Design Summary Explosives Industry	VIII-92
VIIIE-2	BATEA and BADCT Treatment System Design Summary Explosives Industry	VIII-96
VIIIE-3	Wastewater Treatment Costs for BPCTCA, BADCT and BATEA Effluent Limitations (ENR 1780 - August, 1972 Costs) Explosive Industry Subcategory A_1	VIII-100
VIIIE-4	Wastewater Treatment Costs for BPCTCA, BADCT and BATEA Effluent Limitations (ENR 1780 - August, 1972 Costs) Explosive Industry Subcategory A_2	VIII-101
VIIIE-5	Wastewater Treatment Costs for BPCTCA, BADCT and BATEA Effluent Limitations (ENR 1780 - August, 1972 Costs) Explosive Industry Subcategory B	VIII-102

LIST OF TABLES
(continued)

Table	Title	Page
VIIIE-6	Wastewater Treatment Costs for BPCTCA, BADCT and BATEA Effluent Limitations (ENR 1780 - August, 1972 Costs) Explosive Industry Subcategory C	VIII-103
VIIIF-1	Wastewater Treatment Costs for BPCTCA, BADCT and BATEA Effluent Limitations (ENR 1780 - August, 1972 Costs) Carbon Black Industry Subcategory B	VIII-109
VIIIG-1	Wastewater Treatment Costs for (BPCTCA, BADCT and BATEA Effluent Limitations (ENR 1780 - August, 1972 Costs) Photographic Processing Industry	VIII-116
VIIIH-1	BPCTCA Treatment Systems Design Summary Hospitals	VIII-120
VIIIH-2	BADCT Treatment System Design Summary Hospitals	VIII-123
VIIIH-3	Wastewater Treatment Costs for BPCTCA, BADCT and BATEA Effluent Limitations (ENR 1780 - August, 1972 Costs) Hospitals	VIII-124

LIST OF TABLES
(continued)

Table	Title	Page
IXA-1	BPCTCA Effluent Limitations Guidelines Pharmaceutical Industry	IX-3
IXB-1	BPCTCA Effluent Limitations Guidelines Gum and Wood Chemicals Industry	IX-8
IXC-1	BPCTCA Effluent Limitations Guidelines Pesticides and Agricultural Chemicals	IX-11
IXD-1	BPCTCA Effluent Limitations Guidelines Adhesive and Sealants Industry	IX-15
IXE-1	BPCTCA Effluent Limitations Guidelines Explosives Industry	IX-18
IXF-1	BPCTCA Effluent Limitations Guidelines Carbon Black Industry	IX-20
IXG-1	BPCTCA Effluent Limitations Guidelines Photographic Processing	IX-23
IXH-1	BPCTCA Effluent Limitations Guidelines Hospitals	IX-25
XA-1	BATEA Effluent Limitations Guidelines Pharmaceutical Industry	X-4
XB-1	VATEA Effluent Limitations Guidelines Gum and Wood Chemicals Industry	X-6
XC-1	BATEA Effluent Limitations Guidelines Pesticides and Agricultural Chemicals Industry	X-8
XD-1	BATEA Effluent Limitations Guidelines Adhesive and Sealants Industry	X-11
XE-1	BATEA Effluent Limitations Guidelines Explosives Industry	X-12
XF-1	BATEA Effluent Limitations Guidelines Carbon Black Industry	X-15

LIST OF TABLES
(continued)

Table	Title	Page
XG-1	BATEA Effluent Limitations Guidelines Photographic Processing Industry	X-17
XH-1	BATEA Effluent Limitations Guidelines Hospitals	X-19
XIA-1	New Source Performance Standards Pharmaceutical Industry	XI-3
XIB-1	New Source Performance Standards Gum and Wood Chemicals Industry	XI-5
XIC-1	New Source Performance Standards Pesticides and Agricultural Chemicals Industry	XI-7
XID-1	New Source Performance Standards Adhesive and Sealants Industry	XI-9
XIE-1	New Source Performance Standards Explosives Industry	XI-11
XIF-1	New Source Performance Standards Carbon Black Industry	XI-12
XIG-1	New Source Performance Standards Photographic Processing Industry	XI-14
XIH-1	New Source Performance Standards Hospitals	XI-16
XIIA-1	Pretreatment Unit Operations Pharmaceutical Industry	XII-4
XIIB-1	Pretreatment Unit Operations Gum and Wood Chemical Industry	XII-6
XIID-1	Pretreatment Unit Operations Adhesive and Sealants Industry	XII-10
XIIH-1	Pretreatment Unit Operations Hospitals	XII-15

LIST OF TABLES
(continued)

Table	Title	Page
XIIIA-1	Exemplary Biological Treatment Plant Performance Pharmaceutical Industry	XIII-4
XIIIA-2	Average Ratios of Probabilities of Occurrence Pharmaceutical Industry	XIII-5
XIIIH-1	Effluent Variation of Activated Sludge Treatment Plant Effluents - Hospitals	XIII-16

SECTION I

CONCLUSIONS

General

The Miscellaneous Chemicals industry encompasses eight industries, grouped together for administrative purposes. Each industry differs from the others in raw materials used, manufacturing processes employed, and the final products. Water usage and subsequent wastewater discharges also vary considerably from industry to industry. Consequently, for the purpose of the development of the effluent limitations guidelines and corresponding BPCTCA (Best Practicable Control Technology Currently Available), New Source, and BATEA (Best Available Technology Economically Achievable) requirements, each industry is treated independently.

The Miscellaneous Chemicals industry was defined by EPA for the purpose of this study to include those commodities listed under the following Standard Industrial Classifications (SIC):

SIC 2831 - Biological Products
SIC 2833 - Medicinal Chemicals and Botanical Products
SIC 2834 - Pharmaceutical Preparations
SIC 2861 - Gum and Wood Chemicals
SIC 2879 - Agricultural Chemicals (Formulations)
SIC 2879 - Pesticides & Agricultural Chemicals
SIC 2891 - Adhesive and Sealants
SIC 2892 - Explosives
SIC 2895 - Carbon Black
SIC 2899 - Chemicals and Chemical Preparation, Not Elsewhere Classified
SIC 7221 - Photographic Studios, Portrait
SIC 7333 - Commercial Photography, Art and Graphics
SIC 7395 - Photofinishing Laboratories
SIC 7819 - Developing and Printing of Commercial Motion Picture Film
SIC 8062 - General Medical and Surgical Hospitals
SIC 8063 - Psychiatric Hospitals
SIC 8069 - Specialty Hospitals

The diversity of products and manufacturing operations to be covered indicates the need for separate effluent limitations guidelines for different industries, and these are presented in the following sections.

NOTICE: THESE ARE TENTATIVE RECOMMENDATIONS BASED UPON INFORMATION IN THIS REPORT AND ARE SUBJECT TO CHANGE BASED UPON COMMENTS RECEIVED AND FURTHER INTERNAL REVIEW BY EPA.

It should be emphasized that the proposed model technology be used only as a guideline and may not be applicable in every case. The cost models for BPCTCA, BATEA and BADCT were developed only to facilitate the economic analysis and should not be construed as the only technology capable of meeting the effluent limitations guidelines and standards of performance presented in this draft development document. There are many alternative systems which, taken either singly or in combination, are capable of attaining the effluent limitations guidelines and standard of performance recommended in this draft development document. These alternative choices include:

1. Various types of end-of-pipe wastewater treatment.

2. Various in-plant modifications and installation of at-source pollution control equipment.

3. Various combinations of end-of-pipe and in-plant technologies.

The complexity of the Miscellaneous Chemicals Industry dictated the use of only one treatment model for each subcategory for each effluent level.

It is the intent of this study to allow the individual manufacturer within the Miscellaneous Chemicals Industry to make the ultimate choice of what specific combination of pollution control measures is best suited to his situation in complying with the limitations and standards of performance presented in this draft development document.

NOTICE: THESE ARE TENTATIVE RECOMMENDATIONS BASED UPON INFORMATION IN THIS REPORT AND ARE SUBJECT TO CHANGE BASED UPON COMMENTS RECEIVED AND FURTHER INTERNAL REVIEW BY EPA.

A. Pharmaceutical Industry

The Pharmaceutical industry produces hundreds of medicinal chemicals by means of many increasingly complex manufacturing technologies. Water usage and subsequent wastewater discharges are closely related to these products and production processes. Any rational approach to effluent limitations guidelines based on production must recognize these complexities.

For the purpose of establishing effluent limitations guidelines and standards of performance, the Pharmaceutical industry has been divided on the basis of manufacturing techniques, product type, raw materials, and wastewater characteristics into five separate subcategories. Factors such as plant size, plant age, geographic location, and air pollution control equipment were also considered but did not justify further subcategorization of the industry. Each of these factors and impact thereof on categorization is discussed in detail in Section IV. The five subcategories are:

A. Fermentation Product Manufacturers. The production of fermentation products (antibiotics and steroids) is restricted to a few of the larger pharmaceutical firms. Most antibiotics are produced in batch fermentation tanks in the presence of a particular fungus or bacterium.

B. Biological and Natural Extraction Product Manufacturers. Biological and natural extraction products include various blood fractions, vaccines, serums, animal bile derivatives, and plant tissue derivatives. These products are produced in laboratories on a much smaller scale than most pharmaceutical products.

C. Chemical Synthesis Production. The production of chemical synthesis products is very similar to fine chemicals production. Chemical synthesis reactions generally are batch types which are followed by solvent extraction of the product. Subcategory C has been further divided into subcategories C_1 and C_2. Subcategory C_2 includes those plants which manufacture antibiotics by chemical synthesis; C_1 covers all the other chemical synthesis plants.

D. Mixing/Compounding or Formulation Production. The manufacturing operations for formulation plants may be either dry or wet. Dry production involves dry mixing, tableting or capsuling, and packaging. Process equipment is generally vacuum-cleaned to remove dry solids and then washed down. Wet production includes mixing, filtering, and bottling. Process equipment is washed down between production batches.

NOTICE: THESE ARE TENTATIVE RECOMMENDATIONS BASED UPON INFORMATION IN THIS REPORT AND ARE SUBJECT TO CHANGE BASED UPON COMMENTS RECEIVED AND FURTHER INTERNAL REVIEW BY EPA.

E. Microbiological, Biological, and Chemical Research. Research is another important part of the Pharmaceutical industry. Although such facilities do not produce specific marketable products, they do generate wastewaters. These originate primarily from equipment and vessel washings and animal cage washwaters.

Pharmaceutical plants operate throughout the year. Production processes are primarily batch operations, with significant variations in pollutional characteristics over any typical operating period. The characteristics of wastewaters vary from plant to plant according to the products and processes used. Depending on the product mix and the manufacturing process, hourly variations in wastewater volume and loading may occur as a result of certain batch operations (filter washing, crystallization, solvent extraction, etc.).

The Pharmaceutical industry uses water extensively both in processing and for cooling. The plant wastewater collection systems are generally segregated to permit separate collection of process wastewaters and relatively clean noncontact cooling waters. The process wastewaters are usually discharged to a common sewerage system for treatment and disposal.

The major sources of wastewaters in the Pharmaceutical industry are product washings, extraction and concentration procedures, and equipment washdown. Wastewaters generated by this industry can be characterized as containing high concentrations of Biochemical Oxygen Demand (BOD), Chemical Oxygen Demand (COD), Total Suspended Solids (TSS), and solvents. Wastewaters from some chemical synthesis and fermentation operations may contain metals (Fe, Cu, Ni, Ag, etc.), cyanide, or antibacterial constituents which may exert a toxic effect on biological waste treatment processes. Pretreatment at-source to remove these constituents may be required.

Existing control and treatment technology, as practiced by the industry, includes in-plant abatement as well as end-of-pipe treatment. Recovery and reuse of expensive solvents and catalysts are widely practiced in the Pharmaceutical industry for obvious economic reasons. Current end-of-pipe wastewater treatment technology involves biological treatment, physical/chemical treatment, thermal oxidation, or liquid evaporation. Biological treatment includes activated sludge, trickling filters, and aerated lagoon systems.

The effluent limitations guidelines proposed herein are based solely on the contaminants in the contact wastewaters associated with the processes previously discussed in the subcategory descriptions. No specific limitations are proposed for pollutants associated with noncontact wastewaters such as

NOTICE: THESE ARE TENTATIVE RECOMMENDATIONS BASED UPON INFORMATION IN THIS REPORT AND ARE SUBJECT TO CHANGE BASED UPON COMMENTS RECEIVED AND FURTHER INTERNAL REVIEW BY EPA.

boiler and cooling tower blowdown. Effluent limitations guidelines for these two streams are developed in a separate set of guidelines for the Steam and Noncontact Cooling Water Industries.

Since both the raw waste loads (RWL) and the related effluent limitations guidelines developed for the Pharmaceutical industry are based solely on contact process wastewater, it follows that other noncontact wastewaters (including sanitary wastes) will not be included in the effluent limitations guidelines.

Separate effluent limitations guidelines are presented for each of the five subcategories. The wastewater parameters selected are: Biochemical Oxygen Demand (BOD_5), Chemical Oxygen Demand (COD), and Total Suspended Solids (TSS). The choice of these parameters reflects the fact that organic oxygen-demanding material is the major contaminant in wastewaters generated by the Pharmaceutical industry. Ammonia, and organic nitrogen and phosphorus were found in significant quantities; however, in the absence of economically feasible technology for their removal, the best approach to control appears to be in-plant measures or at-source treatment in those special cases where excessive discharge of ammonia, organic nitrogen, or phosphorus is encountered.

Because of extensive in-plant recovery and recycle operations, as described in Section VII, metals and other toxic materials were not found in significant quantities in pharmaceutical plant wastewaters. Other possible RWL parameters (phenol, chlorinated hydrocarbons, various metals, etc.) were considered during the study but were found to be unrelated to production and/or were present in concentrations substantially lower than those which would require specialized end-of-pipe treatment for the entire industry.

It was concluded that the model BPCTCA wastewater treatment technology for subcategories A, B, C_1, D and E should consist of equalization followed by a biological treatment system with sludge handling and treatment facilities. The sludge disposal system would generally consist of sludge thickening, aerobic digestion, vacuum filtration, and ultimate disposal via land-fill. In addition, neutralization facilities preceding the biological system would generally be required for those plants falling in subcategories A and C_1. For subcategory C_2, thermal oxidation was selected for the BPCTCA, BADCT and BATEA model wastewater treatment technologies. Wastewaters from this subcategory have been characterized as low-flow and high-strength. It should be emphasized that the proposed model technology should be used only as a guideline and may not be applicable in every case. Biological treatment models have been developed only to facilitate the economic comparisons and the indicated treatment is not to be thought of as the only technology capable of meeting the effluent limitations guidelines and standards of performance presented in this draft development document. Each manufacturing facility should be evaluated separately to determine the unit operations needed to meet wastewater effluent limitations guidelines applicable for that plant.

NOTICE: THESE ARE TENTATIVE RECOMMENDATIONS BASED UPON INFORMATION IN THIS REPORT AND ARE SUBJECT TO CHANGE BASED UPON COMMENTS RECEIVED AND FURTHER INTERNAL REVIEW BY EPA.

The model BATEA treatment facility for subcategories A and C_1, consists of BPCTCA technology followed by dual-media filtration and activated carbon adsorption. BATEA effluent limitations guidelines for subcategories B, D, and E are based on the addition of dual-media filtration to the proposed BPCTCA treatment technology. The treatment technology suggested to meet the proposed New-Source Performance Standards (BADCT) for subcategories A, B, C_1, D, and E consists of the BPCTCA treatment system plus dual-media filtration.

The data required to compute effluent limitations for specific cases include the identity of the specific manufacturing process and the actual production rate. This information is sufficient to subcategorize the process and subsequently compute the appropriate effluent limitations, based on the pollutant RWL specified for that subcategory.

It should be noted that the actual effluent limitations guidelines would be applied directly only to a plant whose manufacturing processes fall within a single subcategory. For multi-process plants, the effluent pollutant limitations would be equal to the sum of the individual effluent limitations applied to each of its processes. This value represents the long-term average daily discharge value for the plant. An appropriate performance factor can then be applied to obtain maximum average of daily values for any period of thirty consecutive days or maximum daily pollutant discharge rate. These performance factors allow for fluctuations in treatment plant performance and sampling frequency, and are necessary for a meaningful basis for subsequent spot checking and future enforcement action by EPA. These performance factors are developed for the Pharmaceutical industry from historical operations data from several exemplary end-of-pipe biological treatment plants.

Table IA-1 summarizes the contaminants of interest, raw waste loads, and recommended treatment technologies for BPCTCA, BATEA, and BADCT for each subcategory of the Pharmaceutical industry.

NOTICE: THESE ARE TENTATIVE RECOMMENDATIONS BASED UPON INFORMATION IN THIS REPORT AND ARE SUBJECT TO CHANGE BASED UPON COMMENTS RECEIVED AND FURTHER INTERNAL REVIEW BY EPA.

Table IA-1

Summary Table

Pharmaceutical Industry

Subcategories	Contaminants of interest	Flow L/kkg Product (gal/1,000 lbs)	Raw Waste Load (RWL) BOD_5 kg/kkg[1] product	Raw Waste Load (RWL) BOD_5 mg/L	Raw Waste Load (RWL) COD kg/kkg[1] product	Raw Waste Load (RWL) COD mg/L	BPCTCA (1977) Treatment Technology	BPCTCA (1977) Long-Term Average Daily Effluent BOD_5 kg/kkg[1]	BPCTCA (1977) Long-Term Average Daily Effluent BOD_5 mg/L	BPCTCA (1977) Long-Term Average Daily Effluent COD kg/kkg[1]	BPCTCA (1977) Long-Term Average Daily Effluent COD mg/L	TSS mg/L
Subcategory A Fermentation	BOD_5, COD, TOC, TSS, NH_3-N, Total-N, CN, Hg, PO_4	See Figure VA-1	See Fig. VA-1		See Fig. VA-2		Biological Treatment and Sludge Disposal	See Fig. IIA-1		See Fig. IIA-1		50
Subcategory B Biological and Natural Extractions Products	BOD_5, COD, TOC, TSS, NH_3-N, Total-N, PO_4	558,000 (67,000)	144	258	269	481	Biological Treatment and Sludge Disposal	10.1	18	29.6	53	20
Subcategory C_1 Chemical Synthesis	BOD_5, COD, TOC, TSS, NH_3-N, Total-N, CN, Hg, PO_4	160,000 (19,200)	302	1,890	577	3,580	Biological Treatment and Sludge Disposal	21.1	132	62.9	394	50
Subcategory C_2 Chemical Synthesis Synthetic Antibiotic Production	BOD_5, COD, TOC, TSS, NH_3-N, Total-N, CN, Hg, PO_4	100,000 (12,000)	5,200	52,500	6,600	66,600	Liquid Incineration	52	525	66	667	20
Subcategory D Formulation	BOD_5, COD, TOC, TSS, NH_3-N, Total-N, PO_4	14,600 (1,750)	8.1	555	14.7	1,010	Biological Treatment and Sludge Disposal	0.57	39	1.62	111	20
Subcategory E[2] Research	BOD_5, COD, TOC, TSS, NH_3-N, Total-N, PO_4	11,600 lit/1,000 sq m (285) gal/1,000 sq ft	1.76[3]	(.36)[4] 151	3.63[3]	(.74)[4] 31	Biological Treatment and Sludge Disposal	0.12[3] (0.025)[5]	11	0.40[3] (0.081)[5]	34 34	20 20

Subcategories	BATEA (1983) Treatment Technology	BATEA (1983) Long-Term Average Daily Effluent BOD_5 kg/kkg[1]	BATEA (1983) Long-Term Average Daily Effluent BOD_5 mg/L	BATEA (1983) Long-Term Average Daily Effluent COD kg/kkg[1]	BATEA (1983) Long-Term Average Daily Effluent COD mg/L	BATEA (1983) Long-Term Average Daily Effluent TSS mg/L	New Source Performance Standard (BADCT) Treatment Technology	New Source Performance Standard (BADCT) Long-Term Average Daily Effluent BOD_5 kg/kkg[1]	New Source Performance Standard (BADCT) Long-Term Average Daily Effluent BOD_5 mg/L	New Source Performance Standard (BADCT) Long-Term Average Daily Effluent COD kg/kkg[1]	New Source Performance Standard (BADCT) Long-Term Average Daily Effluent COD mg/L	New Source Performance Standard (BADCT) Long-Term Average Daily Effluent TSS mg/L
Subcategory A Fermentation	BPCTCA + Filtration + Activated Carbon	See Fig. IIA-2		See Fig. IIA-2		20	BPCTCA + Filtration	See Fig. IIA-3		See Fig. IIA-3		
Subcategory B Biological and Natural Extractions Products	BPCTCA + Filtration	8.93	16	23.5	42	10	BPCTCA + Filtration	8.93	16	23.5	42	10
Subcategory C_1 Chemical Synthesis	BPCTCA + Filtration + Activated Carbon	4.6	29	11.5	72	20	BPCTCA + Filtration	20.1	126	57.5	320	20
Subcategory C_2 Chemical Synthesis Synthetic Antibiotic Production	Same as BPCTCA	52	525	66	667	20	Same as BPCTCA	52	525	66	667	20
Subcategory D Formulation	BPCTCA + Filtration	0.54	37	1.46	100	10	BPCTCA + Filtration	0.54	37	1.46	100	10
Subcategory E[2] Research	BPCTCA + Filtration	0.10[4] (0.021)[5]	9	0.27[4] (0.055)[5]	23	10	BPCTCA + Filtration	0.10[4] (0.021)[5]	9	0.27[4] (0.055)[5]	23	10

[1] kg/kkg production is equivalent to lbs/1,000 lbs production.
[2] Effluent limitations for Subcategory E are based on gross floor area.
[3] kg/1,000 sq m
[4] lb/1,000 sq ft

NOTICE: THESE ARE TENTATIVE RECOMMENDATIONS BASED UPON INFORMATION IN THIS REPORT AND ARE SUBJECT TO CHANGE BASED UPON COMMENTS RECEIVED AND FURTHER INTERNAL REVIEW BY EPA.

DRAFT

B. Gum and Wood Chemicals Industry

For the purpose of developing recommended effluent limitations guidelines and new-source performance standards for the Gum and Wood Chemicals industry, the industry has been subcategorized as follows:

A. Char and charcoal briquet manufacture by carbonization of hardwood and softwood scraps.

B. Gum rosin and turpentine manufacture by steam distillation of crude gum (exudate) from living longleaf pine and slash pine trees.

C. Wood rosin, turpentine, and pine oil manufacture by solvent extraction-steam distillation of old resinous wood stumps from cut-over pine forests.

D. Tall oil rosin, pitch, and fatty acids manufacture by fractionation of crude tall oil, a by-product of the Kraft (sulfate) pulping process.

E. Essential oils manufacture by steam distillation of scrap wood fines from select lumbering operations.

F. Rosin-based derivatives (specifically, rosin esters and modified rosin esters) manufacture by the chemical reaction of gum, wood, or tall oil rosins.

The criteria used for establishing the above subcategorization were the impact of the following factors on the above groupings:

1. Production processes.
2. Product types and yields.
3. Raw material sources.
4. Wastewater quantities, characteristics, control and treatment.

The wastewater parameters of significance in the Gum and Wood Chemicals industry are BOD_5, COD, TOC, oils and grease, and pH. In addition, for subcategory F phenol was found to be a significant parameter.

Complete elimination of discharge of process wastewater pollutants should be achievable for subcategory A. Individual effluent limitations guidelines were recommended for subcategories B through F for BOD_5 and COD. Limitations on TSS effluent concentrations are recommended for BPCTCA, BADCT, and BATEA technology levels.

Other RWL parameters were considered during the study, and specific products or pollutants which might be inhibitory or incompatible with

NOTICE: THESE ARE TENTATIVE RECOMMENDATIONS BASED UPON INFORMATION IN THIS REPORT AND ARE SUBJECT TO CHANGE BASED UPON COMMENTS RECEIVED AND FURTHER INTERNAL REVIEW BY EPA.

BPCTCA treatment technology are cited in Section VI. It was concluded that the model BPCTCA wastewater treatment technology for this industrial category should consist of a biological treatment system. Typical exemplary processes are activated sludge or aerated lagoons with clarification. These systems may require pH control and equalization in order to control variable waste loads, and phosphorus and nitrogen nutrient addition to insure maintenance of an activated sludge with desirable performance and handling characteristics. These systems do not preclude the use of equivalent physical-chemical systems such as activated carbon in a suitable situation where the significant land area that would otherwise be required (for activated sludge or aerated lagoon) is not available. Additionally, in-process controls are recommended to control those pollutants which may be inhibitory to the biological waste treatment system, as well as segregation of noncontact cooling waters and boiler blowdowns.

End-of-process wastewater treatment technology for new sources utilizing the best available demonstrated control technology (BADCT) is a biological treatment system with suspended solids removal by means of dual-media filtration. In addition, exemplary in-process controls are also recommended, particularly where biologically inhibitory pollutants must be controlled.

Best available technology economically achievable (BATEA - 1983 Standard) is based upon the addition of filtration and activated carbon to BPCTCA treatment. This technology is based upon substantial reductions of dissolved organics which are biorefractory as well as those which are biodegradable.

In conclusion, effluent limitations guidelines were derived on the basis of the maximum for any one day and the maximum average of daily values for any period of thirty consecutive days. Since no long-term data for exemplary treatment were uncovered in the Gum and Wood Chemicals industry during this study, the factors used in deriving these time-based limitations guidelines were derived from long-term performance data from the systems evaluated by EPA for the Petroleum refining industry.

Table IB-1 summarizes the contaminants of interest, raw waste loads, and recommended treatment technologies for BPCTCA, BATEA, and BADCT for each subcategory of the Gum and Wood Chemicals industry.

NOTICE: THESE ARE TENTATIVE RECOMMENDATIONS BASED UPON INFORMATION IN THIS REPORT AND ARE SUBJECT TO CHANGE BASED UPON COMMENTS RECEIVED AND FURTHER INTERNAL REVIEW BY EPA.

Table 18-1

Summary Table
Gum and Wood Chemicals Industry

Subcategories	Contaminants of Interests	Flow L/kkg Product (gal/1,000 lbs Product)	Raw Waste Loads (RWL) BOD_5 kg/kkg[1] Product	BOD_5 mg/L	COD kg/kkg[1]	COD mg/L	TSS mg/L	BPCTCA (1977) Treatment Technology	BOD_5 kg/kkg[1]	BOD_5 mg/L	COD kg/kkg[1] Product	COD mg/L	TSS mg/L
Subcategory A Char & Charcoal Briquets			No discharge of the process wastewater pollutants										
Subcategory B Gum Rosin & Turpentine	BOD_5, COD, TOC, Oil & Grease, TDS, Cl, SO_4, Zn, TSS	528 (63.4)	4.44	8,410	8.40	15,900		Biological treatment and sludge disposal	0.22	420	[illegible]	4,300	50
Subcategory C Wood Rosin, Turpentine and Pine Oil	BOD_5, COD, TOC, TDS	9,470 (1,140)	6.49	685	12.6	1,330		Biological treatment and sludge disposal	0.32	34	[illegible]	360	50
Subcategory D Tall Oil Rosin, Pitch & Fatty Acids	BOD_5, COD, TOC, Oil & Grease, Phenol, TSS	4,860 (583)	3.11	640	7.08	1,460		Biological treatment and sludge disposal	0.16	32	[illegible]	394	50
Subcategory E Essential Oils	BOD_5, COD, TOC, TSS	62,100 (7,450)	70.8	1,140	86.9	1,400		Biological treatment and sludge disposal	3.54	57	23.5	378	50
Subcategory F Rosin Derivatives	BOD_5, COD, TOC, Oil & Grease, Phenol, TDS, SO_4, Cl, Zn, TSS	309 (37)	4.40	14,200	8.58	27,800		Biological treatment and sludge disposal	0.22	711	[illegible]	[illegible],510	50

Subcategories	Contaminants of Interests	BATEA (1983) Treatment Technology	BOD_5 kg/kkg[1]	BOD_5 mg/L	COD kg/kkg[1]	COD mg/L	TSS mg/L	New Source Performance Standards (BADCT) Treatment Technology	BOD_5 kg/kkg[1] Product	BOD_5 mg/L	COD kg/kkg[1] Product	COD mg/L	TSS
Subcategory A Char & Charcoal Briquets			No discharge of the process wastewater pollutants.										
Subcategory B	BOD_5, COD, TOC, Oil & Grease, TDS, Cl, SO_4, Zn, TSS	BPCTCA + Filtration + Activated Carbon	0.066	125	0.68	1,290	20	BPCTCA + Filtration	0.20	379	[illegible]	3,730	20
Subcategory C Wood Rosin, Turpentine and Pine Oil	BOD_5, COD, TOC, TDS	BPCTCA + Filtration + Activated Carbon	0.096	10	1.02	107	20	BPCTCA + Filtration	0.29	31	[illegible]	312	20
Subcategory D Tall Oil Rosin, Pitch & Fatty Acids	BOD_5, COD, TOC, Oil & Grease, Phenol, TSS	BPCTCA + Filtration + Activated Carbon	0.048	10	0.57	118	20	BPCTCA + Filtration	0.15	31	[illegible]	343	20
Subcategory E Essential Oils	BOD_5, COD, TOC, TSS	BPCTCA + Filtration + Activated Carbon	1.06	17	7.05	113	20	BPCTCA + Filtration	3.26	52	[illegible]	325	20
Subcategory F Rosin Derivatives	BOD_5, COD, TOC, OIL & Grease, Phenol, TDS, SO_4, Cl, Zn, TSS	BPCTCA + Filtration + Activated Carbon	0.066	714	0.70	7,260	20	BPCTCA + Filtration	0.20	647	[illegible]	5,546	20

[1] kg/kkg Production is equivalent to lb/1,000 lbs Production

NOTICE: THESE ARE TENTATIVE RECOMMENDATIONS BASED UPON INFORMATION IN THIS REPORT AND ARE SUBJECT TO CHANGE BASED UPON COMMENTS RECEIVED AND FURTHER INTERNAL REVIEW BY EPA.

DRAFT

C. Pesticides and Agricultural Chemicals Industry

There are five major groupings in the pesticides segment of the Miscellaneous Chemicals industry which this report encompasses. These subcategories include:

A. Halogenated Organic Pesticides.
B. Organo-Phosphorus Pesticides.
C. Organo-Nitrogen Pesticides.
D. Metallo-Organic Pesticides.
E. Formulators and Packagers.

Process wastewaters evolved from facilities within the Halogenated Organic pesticide subcategory are primarily due to wet scrubbing, caustic soda scrubbing, and contact cooling systems. Organic loadings are the result of decanting, distillation, and stripping operations. Other significant process wastewater streams include spillage, washdowns and runoff.

To be controlled and treated, process wastewaters must be isolated from nonprocess wastewaters such as utility discharges and uncontaminated storm runoff. BPCTCA treatment of the process wastewaters includes equalization, neutralization, skimming of separable organics and biological treatment. Incineration or contract disposal of strong or toxic wastes may be necessary.

The Organo-Phosphorus pesticides facilities produce wastewaters with high organic loadings from decanter units, distillation towers, overhead collectors, and solvent strippers. Caustic scrubbing and contact cooling are the major contributors to total flow, and highly alkaline wastes result from caustic scrubbing, hydrolyzing, and product washing.

The BPCTCA technologies necessary to control and treat wastewaters from this category include isolation of process streams, separation of insoluble organics, alkaline hydrolysis, equalization, neutralization, and biological treatment. Incineration or contract disposal may be required for very strong or toxic wastes.

Scrubbing operations are the major contributor to the total effluent flow rate for facilities producing pesticides of the Organo-Nitrogen subcategory. Nitrogen loadings are due primarily to decanting operations and extractor/precipitator units. Organic loadings are due to solvent stripping and various purification steps. High organic and solids loadings can result from accidental spillage, equipment cleanout, and area washdowns.

NOTICE: THESE ARE TENTATIVE RECOMMENDATIONS BASED UPON INFORMATION IN THIS REPORT AND ARE SUBJECT TO CHANGE BASED UPON COMMENTS RECEIVED AND FURTHER INTERNAL REVIEW BY EPA.

Treatment of process wastewaters from Organo-Nitrogen pesticide facilities includes neutralization, separable organics separation, equalization, and biological treatment. Incineration or contract disposal of very strong or toxic wastes is required in some cases.

Process wastewaters produced by facilities within the Metallo-Organic subcategory may contain significant ammonia nitrogen concentrations. Solids loadings are due for the most part to various product washing steps. These washing steps also contribute a large portion of the flow. Spillage, rinses, and washdowns are a source of organic and solids loadings.

BPCTCA control and treatment of process wastewaters in this subcategory include metals precipitation, equalization, neutralization and biological treatment. Incineration or contract disposal of very strong toxic wastes may be necessary for some facilities.

Formulators and packagers can be divided into two subcategories: dry-solvent-based and water based. Water-based formulations are the only type of operation that produce process wastewaters. Washing and cleaning operations are the primary source of organic and solids loadings. Air emission control devices also account for suspended and dissolved solids loadings.

Since formulators and packagers can handle any of the above-mentioned subcategories, technologies necessary to control and treat the wastewaters can be a combination of those previously discussed. In general, BPCTCA treatment includes sedimentation and hydrolysis, neutralization and biological treatment.

Solvent-based and dry formulated and packaged products generate low volumes of contaminated waste which can be drummed and handled adequately by disposal contractors.

Table IC-1 summarizes the contaminants of interest, raw waste loads, and recommended treatment technologies for BPCTCA, BATEA and BADCT for each subcategory of the Pesticides and Agricultural Chemicals industry.

BATEA treatment technology for all subcategories includes dual-media filtration plus activated carbon adsorption with BPCTCA technology. Control technology for BADCT includes dual-media filtration in addition to BPCTCA technology for all subcategories.

In conclusion, effluent limitations guidelines were derived on the basis of the maximum for any one day and the maximum average of daily values for any period of thirty consecutive days. Since no long-term data for exemplary treatment were uncovered in the pesticides and agricultural chemicals industry during this study, the factors used in deriving these time-based limitations guidelines were derived from long-term performance data from the exemplary systems evaluated in the Pharmaceutical industry.

NOTICE: THESE ARE TENTATIVE RECOMMENDATIONS BASED UPON INFORMATION IN THIS REPORT AND ARE SUBJECT TO CHANGE BASED UPON COMMENTS RECEIVED AND FURTHER INTERNAL REVIEW BY EPA.

Table IC-1

Summary Table

Pesticides and Agricultural Chemicals Industry

Subcategories	Contaminants of Interests	Flow L/kkg Product (gal/1,000 lbs Product)	Raw Waste Loads (RWL) BOD5 kg/kkg[1] Product	BOD5 mg/L	COD kg/kkg[1] Product	COD mg/L	TSS mg/L	Phenol kg/kkg[1] Product	Phenol mg/L	Total-P kg/kkg[1] Product	Total-P mg/L	TKN kg/kkg[1] Product	TKN mg/L	Metal kg/kkg[1] Product	Metal mg/L
Subcategory A Halogenated Organic Pesticides	BOD_5, COD, TOC, Oil, TSS, Phenol	14,600 (1,750)	218		249		136	0.01							
Subcategory B Organo-Phosphorus Pesticides	BOD_5, COD, TOC Oil, TSS, Total-P, TKN, Cyanide, Phenol	25,000 (3,000)	21		188		45	4.1		24		1 3			
Subcategory C Organo-Nitrogen Pesticides	BOD_5, COD, TOC, Oil, TSS, TKN, Cyanide	30,800 (3,700)	220		323		517			23.7					
Subcategory D Metallo-organic Pesticides	BOD_5, COD, TOC, Oil TSS, TKN, Metals	66,700 (8,000)	34		121		2,700					231		148	
Subcategory E_1 Formulators and Packagers - Water-based Products	BOD_5, COD, TOC Oil, TSS, TKN	1,330 (160)	22		63		312	0.2							
Subcategory E_2 Formulators and Packagers - solvent based dry products.		No Discharge of Process Wastewater Pollutants													

	Treatment Technology	BPCTCA (1977) BOD5 kg/kkg[1] Product	BOD5 mg/L	COD kg/kkg[1] Product	COD mg/L	TSS mg/L	Phenol kg/kkg[1] Product	Phenol mg/L	Total-P kg/kkg[1] Product	Total-P mg/L	TKN kg/kkg[1] Product	TKN mg/L	Cyanide[2] kg/kkg[1] Product	Cyanide[2] mg/L	Metal[3] kg/kkg[1] Product	Metal[3] mg/L
Subcategory A Halogenated Organic Pesticides	API Separator, biological treatment & incineration for strong organic wastes	0.44	30			40	0.00073	0.05								
Subcategory B Organo-Phosphorus Pesticides	API Separator, Alkaline Hydrolysis, Biological treatment, and inc. for strong organic wastes	0.73	30			40	0.00073	0.03	0.08	3	0.24	10	0.00037	0.01		
Subcategory C Organo-Nitrogen Pesticides	Oil & Solids Separation Biological treatment and incineration for strong organic wastes	0.42	30			40					0.62	20	0.00036	0.01		
Subcategory D Metallo-organic Pesticides	Metal separation, Biological treatment and incineration for strong organic wastes	2.0	30			40					1.34	20			0.0014	0 02
Subcategory E_1 Formulators and Packagers - Water-based Products	Dilute Process wastes Aerated lagoon	0.40	30			40					0.014	10				
Subcategory E_2 Formulators and Packagers - solvent based dry products.	Strong Process wastes Alkaline hydrolysis plus above treatment															

[1] kg/kkg Production is equivalent to lb/1,000 lbs Production

[2] only applicable when cyanide compounds can enter the effleunt

[3] limitations are applicable individually for each metal that can enter the effluent

NOTICE: THESE ARE TENTATIVE RECOMMENDATIONS BASED UPON INFORMATION IN THIS REPORT AND ARE SUBJECT TO CHANGE BASED UPON COMMENTS RECEIVED AND FURTHER INTERNAL REVIEW BY EPA.

DRAFT

Table IC-1
(continued)

Subcategories	Contaminants of Interests	Treatment Technology	BATEA (1983) BOD5 kg/kkg[1] Product	BOD5 mg/L	COD kg/kkg[1] Product	COD mg/L	TSS mg/L	Phenol kg/kkg[1] Product	Phenol mg/L	Total-P kg/kkg[1] Product	Total-P mg/L	TKN kg/kkg[1] Product	TKN mg/L	Cyanide[2] kg/kkg[1] Product	Cyanide[2] mg/L	Metal[3] kg/kkg[1] Product	Metal[3] mg/L
Subcategory A Halogenated Organic Pesticides	BOD_5, COD, TOC, Oil, TSS, Phenol	BPCTCA + Filtration + Act. Carbon Adsorption	0.44	30	0.73	50	20	0.00073	0.05								
Subcategory B Organo-Phosphorus Pesticides	BOD_5, COD, TOC Oil, TSS, Total-P, TKN, Cyanide, Phenol	BPCTCA + Filtration + Act. Carbon Adsorption	0.73	30	1.22	50	20	0.00073	0.03	0.08	3	0.24	10	0.00037	0.01		
Subcategory C Organo-Nitrogen Pesticides	BOD_5, COD, TOC, Oil TSS, TKN, Cyanide	BPCTCA + Filtration + Act. Carbon Adsorption	0.92	30	3.06	100	20					0.62	20	0.00036	0.01		
Subcategory D Metallo-organic Pesticides	BOD_5, COD, TOC, Oil TSS, TKN, Metals	BPCTCA + Filtration + Act. Carbon Adsorption	2.0	30	3.34	50	20					1.34	20			0.0014	0.02
Subcategory E_1 Formulators and Packagers - Water-based Products	BOD_5, COD, TOC Oil, TSS, TKN	BPCTCA + Filtration + Act. Carbon	0.40	30	0.067	50	20					0.014	10				
Subcategory E_2 Formulators and Packagers - solvent based dry products.		No Discharge of Process Wastewater Pollutants															

	Treatment Technology	New Source Performance Standard (BADCT) BOD5 kg/kkg[1] Product	BOD5 mg/L	COD kg/kkg[1] Product	COD mg/L	TSS mg/L	Phenol kg/kkg[1] Product	Phenol mg/L	Total-P kg/kkg[1] Product	Total-P mg/L	TKN kg/kkg[1] Product	TKN mg/L	Cyanide[2] kg/kkg[1] Product	Cyanide[2] mg/L	Metal[3] kg/kkg[1] Product	Metal[3] mg/L
Subcategory A Halogenated Organic Pesticides	BPCTCA + Filtration	0.44	30			20	0.00073	0.05								
Subcategory B Organo-Phosphorus Pesticides	BPCTCA + Filtration	0.73	30			20	0.00073	0.03	0.08	3	0.24	10	0.00037	0.01		
Subcategory C Organo-Nitrogen Pesticides	BPCTCA + Filtration	0.92	30			20					0.62	20	0.00036	0.01		
Subcategory D Metallo-organic Pesticides	BPCTCA + Filtration	2.0	30								1.34	20			0.0014	0.02
Subcategory E_1 Formulators and Packagers - Water-based Products	BPCTCA + Filtration	0.4	30			20					0.014	10				
Subcategory E_2 Formulators and Packagers - solvent based dry products.		No Discharge of Process Wastewater Pollutants														

NOTICE: THESE ARE TENTATIVE RECOMMENDATIONS BASED UPON INFORMATION IN THIS REPORT AND ARE SUBJECT TO CHANGE BASED UPON COMMENTS RECEIVED AND FURTHER INTERNAL REVIEW BY EPA.

DRAFT

D. Adhesive and Sealants Industry

The Adhesive and Sealants industry is one in which a wide variety of chemicals are used as raw material. The water usage and subsequent wastewater discharges of this industry are as diverse as its mix of products. Any rational approach to effluent limitations guidelines based on production must take the complexity of the industry into account. The diversity of its products indicates the need for separate limitations for different segments of the industry.

For the purpose of developing recommended effluent limitations guidelines and new source performance standards for the Adhesive and Sealants industry, the industry has been subcategorized as follows:

A. Water-based animal glue and gelatins.

B. Water-based adhesive solutions containing synthetic and natural materials.

C. Solvent solution adhesives and cements generating contaminated wastewaters.

D. Solvent solution adhesives and cements generating noncontact cooling water only.

E. Solid and semi-solid hot melt thermoplastic adhesives.

F. Dry-blended adhesive materials.

The criteria used for establishing the above subcategorization were the impacts of the following factors of the foregoing groupings:

1. Product types.
2. Raw material sources.
3. Wastewater quantities and characteristics.
4. Production processes.

The effluent limitations guidelines proposed herein are based on the dissolved organic contaminants and suspended solids in the contact wastewaters associated with the processes listed in the various subcategories. No specific limitations are proposed for pollutants associated with noncontact wastewaters, such as boiler and cooling tower blowdown. These pollutants will be covered by effluent limitations guidelines for the Steam Supply and Noncontact Cooling Water industries, now being developed.

NOTICE: THESE ARE TENTATIVE RECOMMENDATIONS BASED UPON INFORMATION IN THIS REPORT AND ARE SUBJECT TO CHANGE BASED UPON COMMENTS RECEIVED AND FURTHER INTERNAL REVIEW BY EPA.

The wastewater parameters of significance in the Adhesive and Sealants industry are BOD_5, COD, TOC, and TSS. Their significance reflects the fact that dissolved organic oxygen-demanding material and suspended solids are the major contaminants in the production operations of the Adhesive and Sealants industry. Separate limitations for these parameters are presented for each subcategory.

Other RWL parameters were considered during the study, and specific products or pollutants which might be inhibitory or incompatible with biological treatment technology are discussed in Section VI.

It was concluded that the model BPCTCA wastewater treatment technology should consist of a biological treatment for subcategory A, and double-effect liquid evaporation for subcategories B and C. The biological system may require equalization in order to control variable waste loads.

The evaporation treatment system will also require equalization in order to control variable wastewater flows. Other treatment schemes applicable to these types of wastewaters include activated carbon and liquid incineration. No discharge of process pollutants is recommended for subcategories E and F.

Best Available Technology Economically Achievable (BATEA - 1983 Standard) is based upon the addition of second-stage biological treatment and dual-media filtration to the BPCTCA treatment for subcategory A. BPCTCA and BATEA treatments for subcategories B and C are the same. End-of-process wastewater treatment technology for new sources utilizing the Best Available Demonstrated Control Technology (BADCT) is the same as BPCTCA for subcategories B and C and the addition of filtration to BPCTCA for subcategory A. In addition, in-plant controls and/or pretreatment are also applicable for the control of those pollutants which may be inhibitory to a biological waste treatment system.

It should be emphasized that the proposed treatment models are selected only to facilitate the economic analysis and are not to be thought of as the only technology capable of meeting the effluent limitations guidelines and standards of performance presented in this draft development document. The same results could be achieved by other end-of-pipe treatment technology or solely by in-plant measures or any combination of in-plant measure and end-of-pipe treatment technology.

It should be noted that the actual effluent limitations guidelines would be applied directly only to a plant whose manufacturing processes fall within a single subcategory. This situation will occur only seldom, because most plants are usually associated with multi-product manufacturing. In this case, the effluent limitations guidelines placed upon a plant would be the sum of the individual effluent limitations guidelines applied to each of its processes.

NOTICE: THESE ARE TENTATIVE RECOMMENDATIONS BASED UPON INFORMATION IN THIS REPORT AND ARE SUBJECT TO CHANGE BASED UPON COMMENTS RECEIVED AND FURTHER INTERNAL REVIEW BY EPA.

In conclusion, effluent limitations guidelines were derived on the basis of the maximum for any one day and the maximum average of daily values for any period of thirty consecutive days. Since no long-term data for exemplary treatment were uncovered in the Adhesive and Sealants industry during this study, the factors used in deriving these time-based limitations were derived from long-term performance data from the exemplary systems evaluated in the Pharmaceutical industry.

Table 1D-1 summarizes the contaminants of interest, raw waste loads, and recommended treatment technologies for BPCTCA, BATEA and BADCT for each subcategory of the Adhesive and Sealants industry.

NOTICE: THESE ARE TENTATIVE RECOMMENDATIONS BASED UPON INFORMATION IN THIS REPORT AND ARE SUBJECT TO CHANGE BASED UPON COMMENTS RECEIVED AND FURTHER INTERNAL REVIEW BY EPA.

Table 10-1

Summary Table

Adhesive and Sealants Industry

Subcategories	Contaminants of Interest	Flow L/kkg Product (gal/1,000 lbs)	Raw Waste Load (RWL) BOD_5 kg/kkg[1] product	BOD_5 mg/L	COD kg/kkg[1] product	COD mg/L	BPCTCA (1977) Treatment Technology	Long-Term Average Daily Effluent BOD_5 kg/kkg[1]	BOD_5 mg/L	COD kg/kkg[1]	COD mg/L	TSS mg/L
Subcategory A Water Based Animal Glues and Gelatins	BOD_5, COD, TOC, TSS	250,000 (30,000)	942	3,770	2,520	10,100	Biological Treatment and Sludge Disposal	65.9	265	176	710	50
Subcategory B Water Based Adhesive Solutions Containing Synthetic and Natural Materials	BOD_5, COD, TOC, TSS	940 (113)	3.4	3,610	15.5	16,500	Evaporation	0.24	255	1.09	1,300	20
Subcategory C Solvent Solution Adhesives and Cements Generating Contaminated Wastewaters	BOD_5, COD, TOC, TSS	340 (41)	4.4	12,900	7.3	21,500	Evaporation	0.31	910	0.51	1,530	20
Subcategory D Solvent Solution Adhesives and Cements Generating Noncontact Cooling Water Only			No Discharge of Process Wastewater Pollutants									
Subcategory E Solid and Semi-Solid Hot Melt Thermoplastic Adhesives			No Discharge of Process Wastewater Pollutants									
Subcategory F Dry-Blended Adhesive Materials			No Discharge of Process Wastewater Pollutants									

Subcategories	BATEA (1983) Treatment Technology	Long-Term Average Daily Effluent BOD_5 kg/kkg	BOD_5 mg/L	COD kg/kkg	COD mg/L	TSS mg/L	New Source Performance Standard (BADCT) Treatment Technology	Long-Term Average Daily Effluent BOD_5 kg/kkg	BOD_5 mg/L	COD kg/kkg	COD mg/L	TSS mg/L
Subcategory A Water Based Animal Glues and Gelatins	Two-Stage Biological Treatment + Filtration + Sludge Disposal	25	100	66.9	267	20	Same as BPCTCA	65	260	170	680	20
Subcategory B Water Based Adhesive Solutions Containing Synthetic and Natural Materials	Same as BPCTCA	0.24	255	1.09	1,160	20	Same as BPCTCA	0.24	255	1.09	1,160	20
Subcategory C Solvent Solution Adhesives and Cements Generating Contaminated Wastewaters	Same as BPCTCA	0.31	910	0.51	1,500	20	Same as BPCTCA	0.31	910	0.51	1,500	20

[1] kg/kkg production is equivalent to lbs/1,000 lbs production

NOTICE: THESE ARE TENTATIVE RECOMMENDATIONS BASED UPON INFORMATION IN THIS REPORT AND ARE SUBJECT TO CHANGE BASED UPON COMMENTS RECEIVED AND FURTHER INTERNAL REVIEW BY EPA.

DRAFT

E. Explosives Industry

For the purposes of developing effluent limitations guidelines and standards of performance, the Explosives industry has been subcategorized as follows:

A_1. Manufacture of Explosives. Examples of explosives are dynamite, nitroglycerin, ammonium nitrate, cyclotrimethylene trinitramine (RDX), cyclotetramethylene tetranitramine (HMX), and trinitrotoluene (TNT).

A_2. Manufacture of Propellants. Example of propellants are single-, double-, and triple-based propellants, rolled powder, high-energy ball powder, and nitrocellulose (NC).

B. Load and Pack Operations. Includes plants which blend explosives and market a final product, and plants that fill shells and blasting caps. Examples of such installations would be ammonium nitrate and fuel oil (ANFO), nitrocarbonitrate (NCN), slurries, water gels, and shell plants.

C. Manufacture of Initiators. Highly-sensitive explosives used for detonation. Examples are pentaerythritol tetranitrate (PETN), lead styphonate, tetryl, mercury fulminate, lead azide, nitromonite (HMN), and isosorbide dinitrate.

The wastewater parameters of significance in the Explosives industry are BOD_5, COD, TOC, TSS, NO_3-N, SO_4, TKN, and trace quantities of explosives. In addition, lead and sometimes mercury were found to be significant in the wastewaters of subcategory C. The characterization of the wastewaters are in terms of these parameters and their concentrations are variable.

In explosives manufacturing, a portion of the pollution load comes from the manufacture concentration, recovery, and purification of sulfuric, nitric, acetic and other acids. The wastes associated with this segment of the Explosives industry are not addressed in this document. These wastes will fall under different effluent limitations guidelines, namely, that of the Inorganic or Organic Chemicals industry.

End-of-process treatment for the 1977 standard, i.e., Best Practicable Control Technology Currently Available (BPCTCA) is defined as biological treatment as typified by activated sludge with pre-clarification. These systems may require pH control and equalization in order to control variable waste loads, and phosphorus nutrient addition to insure maintenance of an activated sludge with desirable performance and handling characteristics. These systems do not preclude the use of equivalent chemical-physical systems, nor do they preclude the use of in-process controls applicable for the control of those pollutants which may be inhibitory to the biological waste treatment system.

NOTICE: THESE ARE TENTATIVE RECOMMENDATIONS BASED UPON INFORMATION IN THIS REPORT AND ARE SUBJECT TO CHANGE BASED UPON COMMENTS RECEIVED AND FURTHER INTERNAL REVIEW BY EPA.

End-of-process wastewater treatment technology for new sources utilizing the Best Available Demonstrated Control Technology (BADCT) is defined as biological treatment with suspended solids removal via filtration. In addition, exemplary in-process controls are applicable, particularly where biologically inhibitory pollutants must be controlled.

Best Available Technology Economically Achievable (BATEA), the 1983 standard, is based upon the addition of filtration and activated carbon to BPCTCA treatment. This technology is based upon substantial reductions of dissolved organics which are refractory, as well as those which are biodegradable.

In conclusion, the effluent limitations guidelines that are developed are based on averages. The effluent limitations guidelines are derived on the basis of the maximum for any one day and the maximum average of daily values for any period of thirty consecutive days, and are determined using the performance factors developed from long-term performance from the exemplary systems evaluated in the Explosives industry.

Table IE-1 summarizes the contaminants of interest, raw waste loads, and recommended treatment technologies for BPCTCA, BATEA, and BADCT for each subcategory of the Explosives industry.

NOTICE: THESE ARE TENTATIVE RECOMMENDATIONS BASED UPON INFORMATION IN THIS REPORT AND ARE SUBJECT TO CHANGE BASED UPON COMMENTS RECEIVED AND FURTHER INTERNAL REVIEW BY EPA.

Table IE-1

Summary Table
Explosives Industry

Subcategories	Contaminants of Interest	Flow l/kkg Product (gal/1,000 lbs)	Raw Waste Loads (RWL) BOD5 kg/kkg product	BOD5 mg/L	COD kg/kkg product	COD mg/L	TSS mg/L	BPCTCA (1977) Long-Term Average Daily Effluent Treatment Technology	BOD5 kg/kkg[1] Prod.	BOD5 mg/L	COD kg/kkg[1] Prod.	COD mg/L	TSS mg/L
Subcategory A_1 Manufacture of Explosives	BOD_5, COD, TOC, TSS, NO_3, SO_4, TKN, Trace Explosives (TNT, NG, RDX, HMX)	1,680 (201)	1.46	871	3.87	2,310	690	Biological Treatment and Sludge Disposal	0.10	60	1.08	647	50
Subcategory A_2 Manufacture of Propellants	BOD_5, COD, TOC, TSS, NO_3, SO_4, TKN, Trace Explosives	217,000 (26,000)	63.4	700	118	1,250	270	Biological Treatment and Sludge Disposal	4.44	20	33	152	50
Subcategory B Load and Pack Operations	BOD_5, COD, TOC, TSS, NO_3, SO_4, TKN, Trace Explosives	1,330 (160)	0.0039	3	0.092	70	690	Biological Treatment and Sludge Disposal	0.0003	0.2	0.026	20	50
Subcategory C Manufacture of Initiators	BOD_5, COD, TOC, TSS, NO_3, SO_4, TKN, Trace Explosives	174,000 (20,900)	1,260	7,230	6,550	37,600	56	Biological Treatment and Sludge Disposal	88.2	507	1,830	10,500	50

[1] kg/kkg is equivalent to lb/1,000 lbs

Subcategories		BATEA (1983) Treatment Technology	Long-Term Average Daily Effluent BOD5 kg/kkg Prod.	BOD5 mg/L	COD kg/kkg Prod.	COD mg/L	TSS mg/L	New Source Performance Standard (BADCT) Long-Term Average Daily Effluent Treatment Technology	BOD5 kg/kkg Prod.	BOD5 mg/L	COD kg/kkg Prod.	COD mg/L	TSS mg/L
Subcategory A_1 Manufacture of Explosives	BOD_5, COD, TOC, TSS, NO_3, SO_4, TKN, Trace Explosives (TNT, NG, RDX, HMX)	BPCTCA Filtration Activated Carbon	0.028	17	0.23	137	20	BPCTCA Filtration	0.092	55	0.94	560	20
Subcategory A_2 Manufacture of Propellants	BOD_5, COD, TOC, TSS, NO_3, SO_4, TKN, Trace Explosives	BPCTCA Filtration Activated Carbon	1.24	6	6.90	32	20	BPCTCA Filtration	4.08	19	29	134	20
Subcategory B Load and Pack Operations	BOD_5, COD, TOC, TSS, NO_3, SO_4, TKN, Trace Explosives	BPCTCA Filtration Activated Carbon	0.00008	0.06	0.005	4	20	BPCTCA Filtration	0.0003	0.2	0.023	17	20
Subcategory C Manufacture of Initiators	BOD_5, COD, TOC, TSS, NO_3, SO_4, TKN, Trace Explosives	BPCTCA Filtration Activated Carbon	24.7	142	384	2,210	20	BPCTCA Filtration	81.1	466	1,590	9,140	20

NOTICE THESE ARE TENTATIVE RECOMMENDATIONS BASED UPON INFORMATION IN THIS REPORT AND ARE SUBJECT TO CHANGE BASED UPON COMMENTS RECEIVED AND FURTHER INTERNAL REVIEW BY EPA.

DRAFT

F. Carbon Black Industry

For the purpose of developing recommended effluent limitations guidelines and new source performance standards for Carbon Black manufacture, the industry has been subcategorized by process as follows:

A. Furnace Process
B. Thermal Process

The criteria used for establishing the above subcategorization were the impact of the following factors on the above groupings:

1. Production processes
2. Product types and yields
3. Raw material sources
4. Wastewater quantities, characteristics, control and treatment

The only wastewater parameter of significance in the Carbon Black Industry is TSS.

It was concluded that complete elimination of discharge of process wastewater pollutants is achievable for subcategory A, and that effluent limitations guidelines are required in subcategory B for TSS. It was further concluded that, for subcategory B, limitation of pollution concentrations was necessary, in addition to effluent limitations guidelines, in order to prevent the imposition of excessively stringent effluent limitations guidelines.

End-of-process treatment for the 1977 BPCTCA standard is gravity settling as typified by exemplary processes: e.g., settling/evaporation ponds or mechanical clarification. These systems do not preclude the use of equivalent systems in a situation where the land area required for the indicated treatment is not available.

End-of-process wastewater treatment technology for new sources utilizing the Best Available Demonstrated Control Technology (BADCT) is gravity settling followed by filtration.

Best Available Technology Economically Achievable (BATEA - 1983 Standard) is the same as BADCT.

Table IF-1 summarizes the contaminants of interest, raw waste loads, and recommended treatment technologies for BPCTCA, BATEA, and BADCT for each subcategory of the Carbon Black industry.

NOTICE: THESE ARE TENTATIVE RECOMMENDATIONS BASED UPON INFORMATION IN THIS REPORT AND ARE SUBJECT TO CHANGE BASED UPON COMMENTS RECEIVED AND FURTHER INTERNAL REVIEW BY EPA.

Table IF-1
Summary Table

Carbon Black Industry

Subcategories	Contaminants of Interest	Flow L/kkg Product (gal/1,000 lbs.)	Raw Waste Loads (RWL) Parameter	kg/kkg[1]	mg/L	Treatment Technology	BPCTCA (1977) Long-Term Average Daily Effluent Parameter	kg/kkg[1]	mg/L
Subcategory A									
Furnace Black	No Discharge of Process Wastewater Pollutants								
Subcategory B									
Thermal Black	TSS	721	TSS	0.089	124	Settling, Evaporation Pond, or Mechanical Gravity Settler	TSS	0.053	75

Subcategories	Treatment Technology	BATEA (1983) Long-Term Average Daily Effluent Parameter	kg/kkg[1]	mg/L	New Source Performance Standard (BADCT) Treatment Technology	Long-Term Average Daily Effluent Parameter	kg/kkg[1]	mg/L
Subcategory A								
Furnace Black	No Discharge of Process Wastewater Pollutants							
Subcategory B								
Thermal Black	BPCTCA + Filtration	TSS	0.021	30	BPCTCA + Filtration	TSS	0.021	30

[1] kg/kkg production is equivalent to lbs./1,000 lbs. production

NOTICE: THESE ARE TENTATIVE RECOMMENDATIONS BASED UPON INFORMATION IN THIS REPORT AND ARE SUBJECT TO CHANGE BASED UPON COMMENTS RECEIVED AND FURTHER INTERNAL REVIEW BY EPA.

DRAFT

G. Photographic Processing Industry

The Photographic Processing industry was not subcategorized for the purpose of effluent limitations guidelines. Subcategorization was deemed unnecessary because the pollutants in the wastewaters and the pollutant loadings per unit of production were in a relatively narrow range in the plants surveyed.

The major sources of wastewater in the Photographic Processing industry are photoprocessing solution overflows and wash waters. Wastewaters generated by this industry can be characterized as containing high concentrations of BOD_5, COD, TOC, TDA, silver, and ferrocyanide.

Existing control and treatment technology, as practiced in the industry, includes primarily in-plant pollutant reductions for silver and ferrocyanide through recovery of bleaches and silver which is widely practiced by the industry for economic reasons. Practically all photoprocessing plants discharge their wastewaters to municipal sewer systems; only one plant visited had any end-of-pipe treatment facility, a 20,000-gpd capacity pilot biological treatment system to investigate the treatability of its wastewaters.

Effluent limitations guidelines have been established for Biochemical Oxygen Demand (BOD_5), Chemical Oxygen Demand (COD), Total Suspended Solids (TSS), silver thiosulfate, and ferrocyanide. The choice of these parameters indicates that organic oxygen-demanding material and constituents, which can exert a toxic effect on a biological treatment process, are the major contaminants in the photographic processing wastewaters.

The treatment models recommended to attain each of the three levels of treatment technology are:

Technology Level	End-Of-Pipe Treatment Model
BPCTCA	In-plant modifications and activated biological treatment
BADCT	BPCTCA plus filtration
BATEA	BPCTCA plus filtration

It is emphasized that in-plant measures to reduce silver and ferrocyanide concentrations as well as end-of-pipe treatment methods are included as part of the recommended treatment technologies.

NOTICE: THESE ARE TENTATIVE RECOMMENDATIONS BASED UPON INFORMATION IN THIS REPORT AND ARE SUBJECT TO CHANGE BASED UPON COMMENTS RECEIVED AND FURTHER INTERNAL REVIEW BY EPA.

It should be noted that since separate limitations will be required for BOD_5, COD, TOC, TSS, silver and ferrocyanide, there may be cases where compliance with one of the limitations will require treating to levels below the actual limitations for the others. In such cases, it will be necessary to ascertain the particular character of the waste and to determine if compliance with all these limitations is reasonable. This decision should be based upon treatability studies covering both biological systems and physical/chemical systems.

In conclusion, effluent limitations guidelines were derived on the basis of the maximum for any one day and the maximum average of daily values for any period of thirty consecutive days. Since no long-term data for exemplary treatment were uncovered in the Photographic Processing industry during this study, the factors used in deriving these time-based limitations were derived from long-term performance data from the exemplary systems evaluated in the Pharmaceutical industry.

Table IG-1 summarizes the contaminants of interest, raw waste loads, and recommended treatment technologies for BPCTCA, BATEA, AND BADCT for the Photographic Processing industry.

NOTICE: THESE ARE TENTATIVE RECOMMENDATIONS BASED UPON INFORMATION IN THIS REPORT AND ARE SUBJECT TO CHANGE BASED UPON COMMENTS RECEIVED AND FURTHER INTERNAL REVIEW BY EPA.

Table IG-1

Summary Table
Photographic Processing Industry

Subcategory	Contaminants of Interest	Flow L/1,000 sq. m (gal/1,000 sq.ft.)	RWL Parameter	RWL kg/1,000 sq. m (lbs./1,000 sq.ft.)	RWL mg/L	BPCTCA (1977) Treatment Technology	BPCTCA (1977) Long-Term Daily Effluent Parameter	BPCTCA (1977) kg/1,000 sq. m (lbs./1,000 sq.ft.)	BPCTCA (1977) mg/L
Entire Industry	BOD_5, COD, TOC, TSS, TKN, TDS, Silver, Ferrocyanide	120,000 (2,960)	BOD_5	36.0 (7.36)	298	Biological Treatment + Sludge Disposal Facilities	BOD_5	5.4 (1.11)	45
			COD	129.0 (26.4)	1,070		COD	64.5 (13.2)	535
			Silver Thiosulfate (as Ag)	0.07 (0.014)	0.6		Silver Thiosulfate (as Ag)	0.015 (0.003)	0.1
			Ferrocyanide	0.058 (0.)	4.9		Ferrocyanide	-	1.35
							TSS	-	20

Subcategory	BATEA (1983) Treatment Technology	BATEA (1983) Long-Term Daily Effluent Parameter	BATEA (1983) kg/1,000 sq. m	BATEA (1983) mg/L	New Source Performance Standards (BADCT) Treatment Technology	New Source Performance Standards (BADCT) Long-Term Daily Effluent Parameter	New Source Performance Standards (BADCT) kg/1,000 sq. m	New Source Performance Standards (BADCT) mg/L
Entire Industry	BPCTCA + Filtration	BOD_5	3.6 (0.74)	30	BPCTCA + Filtration	BOD_5	3.6 (0.74)	30
		COD	51.6 (10.6)	429		COD	51.6 (10.6)	429
		Silver Thiosulfate (as Ag)	0.015 (0.003)	0.1		Silver Thiosulfate (as Ag)	0.015 (0.003)	0.1
		Ferrocyanide	-	1.35		Ferrocyanide	-	1.35
		TSS	-	10 0		TSS	-	10.0

DRAFT

NOTICE: THESE ARE TENTATIVE RECOMMENDATIONS BASED UPON INFORMATION IN THIS REPORT AND ARE SUBJECT TO CHANGE BASED UPON COMMENTS RECEIVED AND FURTHER INTERNAL REVIEW BY EPA.

H. Hospitals

It was determined that the Hospitals category of the Miscellaneous Chemicals industry did not require subcategorization for the purpose of establishing effluent limitations guidelines and standards of performance. Possible basis for subcategorization considered during the study included hospital size, hospital age, geographic location, hospital type, nature of wastes generated, and treatability of wastewaters. It was concluded that hospital wastewater characteristics are independent of these factors and that further subcategorization was not justified.

Unlike many industrial plants, sanitary wastes in a hospital are not segregated from other waste streams. Sanitary wastes make up a large portion of the total wastewater flow and are discharged to a common sewer system along with other waste streams. Therefore, since sanitary wastes make up a significant portion of a hospital's total wastewater effluent, it was decided not to exclude them from the raw waste load (RWL) values, as was done with the other Miscellaneous Chemicals industries. The major sources of wastewaters in a hospital are patient rooms, laundries, cafeterias, surgical suites, laboratories, and X-ray departments. Wastewaters generated by hospitals can be characterized as very similar to normal domestic sewage. Specific contaminants which may be present include mercury, silver, barium, and boron. Various anti-bacterial constituents (i.e., disinfectants) which may exert a toxic effect on biological waste treatment processes may also be present.

Existing control and treatment technology practiced by hospitals include some in-house reductions as well as end-of-pipe treatment. Most hospitals are located in densely-populated areas and discharge their wastes to municipal sewer systems. However, some do utilize on-site wastewater treatment systems. Current end-of-pipe wastewater treatment technology involves biological treatment. The most common treatment system used is trickling filters, although activated sludge and aerated lagoons are also utilized. In-plant pollution abatement measures include mercury-, barium-, and boron-reduction programs and silver-recovery systems.

Effluent limitations guidelines have been proposed for two wastewater parameters: Biochemical Oxygen Demand (BOD_5) and Total Suspended Solids (TSS). The choice of these parameters reflects the fact that organic oxygen-demanding material is the major contaminant in wastewaters generated by hospitals. Other possible RWL parameters (mercury, cyanide, nitrogen, chlorides, etc.) were studied during the project, but were found to be present in concentrations substantially lower than those which would require specialized end-of-pipe treatment.

NOTICE: THESE ARE TENTATIVE RECOMMENDATIONS BASED UPON INFORMATION IN THIS REPORT AND ARE SUBJECT TO CHANGE BASED UPON COMMENTS RECEIVED AND FURTHER INTERNAL REVIEW BY EPA.

It was concluded that the model BPCTCA waste treatment technology for the Hospitals category should consist of a biological treatment system with sludge handling facilities. The sludge disposal system would generally consist of aerobic digestion, vacuum filtration, and ultimate disposal in a landfill. It is emphasized that the proposed model technology should be used only as a guide and is not applicable in every case. The model BADCT and BATEA treatment facility for hospitals consists of BPCTCA technology followed by filtration.

The only information required to develop a specific pollutant effluent limitations guideline is the size of the hospital measured in terms of the number of occupied beds. An individual limitation can then be established for a hospital by multiplying the size of the facility (in thousands of occupied beds) by the pollutant effluent limitations guidelines specified. Since the effluent limitations guidelines are expressed in pounds of pollutant per thousand beds occupied, this multiplication gives the long-term average daily discharge value for the hospital. An appropriate performance factor can then be applied to obtain maximum average of daily values for any period of thirty consecutive days and maximum value for any one day for the effluent limitations guidelines. These performance factors allow for variation in treatment plant performance and sampling frequency and are necessary for a meaningful basis for subsequent spot checking and future enforcement action by EPA. These performance factors are developed from the historical operation data from several exemplary end-of-pipe biological treatment plants for Hospitals.

Table IH-1 summarizes the contaminants of interest, raw waste loads, and recommended treatment technologies for BPCTCA, BATEA, and BADCT for Hospitals.

NOTICE: THESE ARE TENTATIVE RECOMMENDATIONS BASED UPON INFORMATION IN THIS REPORT AND ARE SUBJECT TO CHANGE BASED UPON COMMENTS RECEIVED AND FURTHER INTERNAL REVIEW BY EPA.

Table IH-1

Summary Table

Hospitals

Subcategories	Contaminants of interest	Flow	Raw Waste Load (RWL)				BPCTCA (1977)			
			BOD_5		COD		Treatment Technology	Long-Term Average Daily Effluent		
								BOD_5		TSS
		L/1,000 occupied beds (gal/1,000 occupied beds)	kg/1,000 occupied beds (lb/1,000 occupied beds)	mg/L	kg/1,000 occupied beds (lb/1,000 occupied beds)	mg/L		kg/1,000 occupied beds (lb/1,000 occupied beds)	mg/L	mg/L
Hospitals	BOD_5, COD, TOC, TSS, Hg, Ag, Barium, Boron	1,210,000 (319,000)	266 (587)	221	731 (1,610)	605	Biological Treatment + Sludge Disposal Facilities	18.6 (14.1)	15	20

BATEA (1983)				New Source Performance Standard (BADCT)			
Treatment Technology	Long-Term Average Daily Effluent			Treatment Technology	Long-Term Average Daily Effluent		
	BOD_5		TSS		BOD_5		TSS
	kg/1,000 occupied beds (lb/1,000 occupied beds)	mg/L	mg/L		kg/1,000 occupied beds (lb/1,000 occupied beds)	mg/L	mg/L
BPCTCA + Filtration	12.1 (26.6)	10	10	BPCTCA + Filtration	12.1 (26.6)	10	10

NOTICE: THESE ARE TENTATIVE RECOMMENDATIONS BASED UPON INFORMATION IN THIS REPORT AND ARE SUBJECT TO CHANGE BASED UPON COMMENTS RECEIVED AND FURTHER INTERNAL REVIEW BY EPA.

DRAFT

SECTION II

RECOMMENDATIONS

General

The recommendations for effluent limitations guidelines commensurate with the Best Practicable Control Technology Currently Available (BPCTCA) and end-of-pipe treatment technology for BPCTCA for each of the industrial categories are presented in the following text. The text also includes effluent limitations guidelines to be attained by the application of the Best Available Technology Economically Achievable (BATEA) and end-of-pipe treatment technology for BATEA for each of the industrial categories. Exemplary in-process controls, as discussed in the later sections of this document, are also applicable to this technology.

The Best Available Demonstrated Control Technology (BADCT) for new sources includes the most exemplary process controls. The recommendations for effluent limitations guidelines and end-of-pipe treatment technology for BADCT for each of the industrial categories are also given in the following text.

NOTICE: THESE ARE TENTATIVE RECOMMENDATIONS BASED UPON INFORMATION IN THIS REPORT AND ARE SUBJECT TO CHANGE BASED UPON COMMENTS RECEIVED AND FURTHER INTERNAL REVIEW BY EPA.

A. Pharmaceutical Industry

The effluent limitations guidelines commensurate with BPCTCA, BATEA, and New Source treatment technology proposed for each subcategory of the Pharmaceutical industry are presented in Figures IIA-1, IIA-2, IIA-3 and Tables IIA-1, IIA-2 and IIA-3. The effluent limitations guidelines were derived on the basis of the maximum average of daily values for 30 consecutive days and the maximum for any one day, and have been developed on the basis of performance factors for treatment plant operation, as discussed in Section XIII of this draft development document. Process wastewaters subject to these limitations include all contact process water, but do not include noncontact sources such as boiler and cooling tower blowdown, water treatment wastes, sanitary, and other similar flows.

Implicit in the recommended guidelines for the Pharmaceutical industry is the fact that process wastes can be isolated from nonprocess wastes such as utility discharges and uncontaminated storm runoff. Segregation of process sewers is therefore the first recommended step in the accomplishment of reducing pollutant loadings to levels necessary to meet the proposed guidelines. Treatment of process wastewaters collected by a combined process/nonprocess sewer system is not cost-effective due to dilution by the relatively large volume of nonprocess wastewaters. It is further suggested that uncontaminated waters, such as storm runoff, be segregated from outdoor areas where there is potential for contamination by chemical spills. This could be accomplished by roofing or curbing potentially-contaminated areas and by collecting and treating runoff which cannot be isolated from such areas. In-plant modification which will lead to reductions in wastewater flow, increased quantity of water used for recycle or reuse, and improvement in raw wastewater quality should be implemented, provided that these modifications have minimum impact on processing techniques or product quality. Segregation of strong and weak waste streams and treating them separately is recommended from the standpoint of cost effectiveness.

For wastewater containing significant quantities of metals, cyanide, or anti-bacterial constituents which may exert a toxic effect on biological treatment processes, pretreatment at-source is recommended. For those wastewaters which contain significant quantities of cyanide or ammonia, cyanide destruction or ammonia removal at-source is recommended. Other in-plant measures such

NOTICE: THESE ARE TENTATIVE RECOMMENDATIONS BASED UPON INFORMATION IN THIS REPORT AND ARE SUBJECT TO CHANGE BASED UPON COMMENTS RECEIVED AND FURTHER INTERNAL REVIEW BY EPA.

solvent recovery and incineration of still bottoms and of solvent streams not economical to recover are practiced by many Pharmaceutical plants, and are recommended for adoption by all plants where applicable.

End-of-pipe treatment technologies equivalent to biological treatment should be applied to the wastewaters from pharmaceutical subcategories A, B, C_1, D, and E to achieve BPCTCA effluent requirements. For subcategory C_2, liquid incineration is recommended to achieve BPCTCA, BADCT, and BATEA effluent requirements. In addition, to minimize capital expenditures for end-of-pipe wastewater treatment facilities, BPCTCA technology includes the maximum utilization of current in-plant pollution abatement methods presently practiced by the Pharmaceutical industry.

To meet BATEA requirements, end-of-pipe treatment technologies equivalent to BPCTCA treatment, followed by multi-media gravity filtration and activated carbon adsorption, are recommended for subcategories A and C_1. For subcategories B, D, and E, BPCTCA treatment followed by dual-media filtration is proposed. BATEA treatment technology also includes the improvement of existing in-plant pollution abatement measures and the use of the most exemplary process controls.

BADCT control and treatment standards, to be applied to new sources, are equivalent to BPCTCA treatment followed by dual-media filtration. This is identical to BATEA standards for subcategories B, D, and E. Exemplary in-process controls are also applicable to this technology. The use of activated carbon adsorption has not been recommended as part of the new source performance standards, as this advanced wastewater treatment technology has not been demonstrated in the Pharmaceutical industry sufficiently to establish operating performance, reliability, and economics. The treatment, control theory, and effluent limitations guidelines for the nonprocess wastewaters (boiler blowdown, cooling tower blowdowns, water treatment plant wastes) generated by the Pharmaceutical industry should be covered by the Steam Supply and Noncontact Cooling Water Industry Guidelines and by the water treatment effluent guidelines which are to be published by EPA.

NOTICE: THESE ARE TENTATIVE RECOMMENDATIONS BASED UPON INFORMATION IN THIS REPORT AND ARE SUBJECT TO CHANGE BASED UPON COMMENTS RECEIVED AND FURTHER INTERNAL REVIEW BY EPA.

DRAFT

FIGURE IIA-1

CATEGORY A - BPCTCA EFFLUENT

LIMITATIONS
VS
PRODUCTION

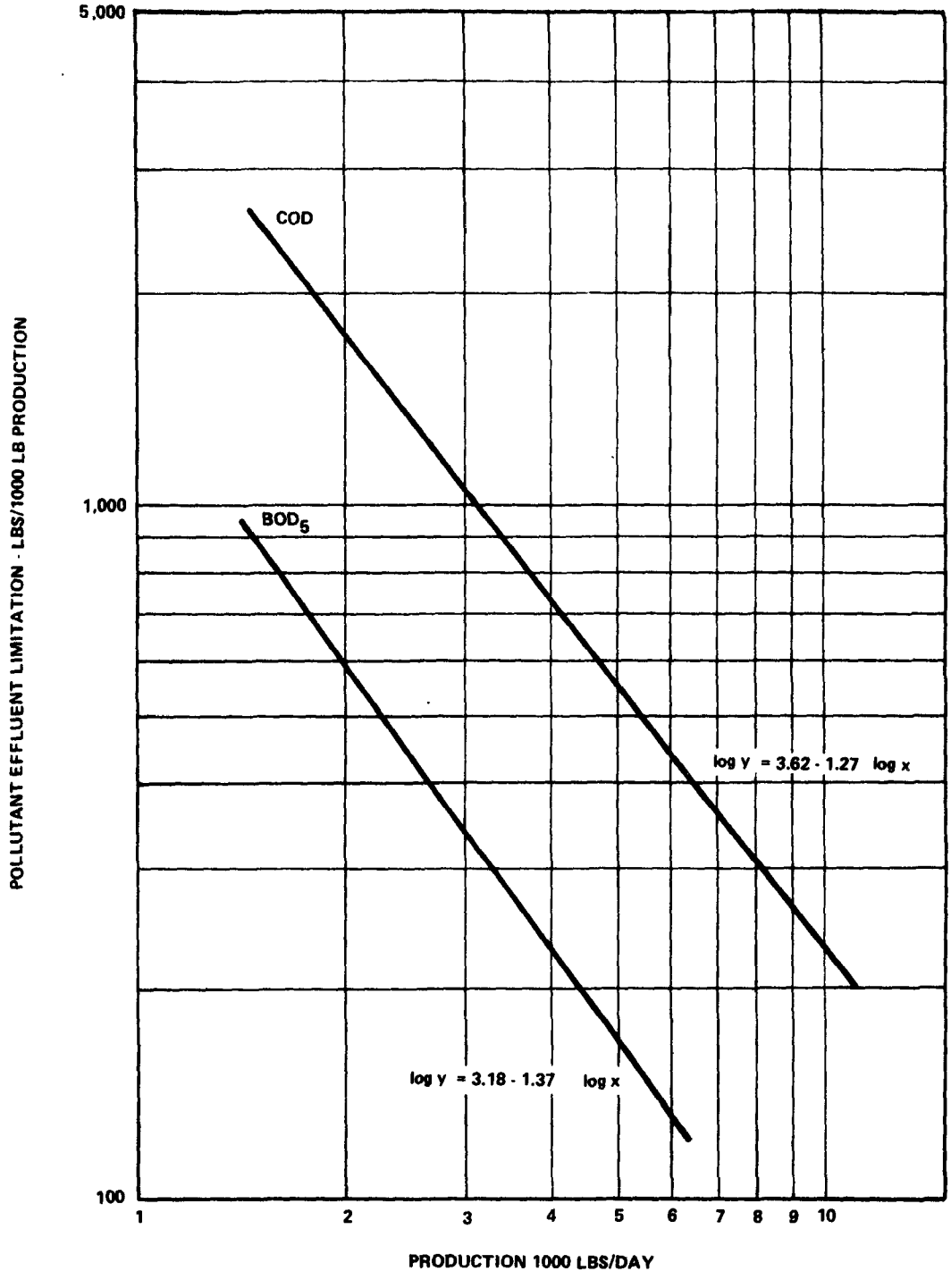

NOTICE: THESE ARE TENTATIVE RECOMMENDATIONS BASED UPON INFORMATION IN THIS REPORT AND ARE SUBJECT TO CHANGE BASED UPON COMMENTS RECEIVED AND FURTHER INTERNAL REVIEW BY EPA.

FIGURE IIA-2

DRAFT

CATEGORY A - BATEA EFFLUENT

LIMITATIONS
VS
PRODUCTION

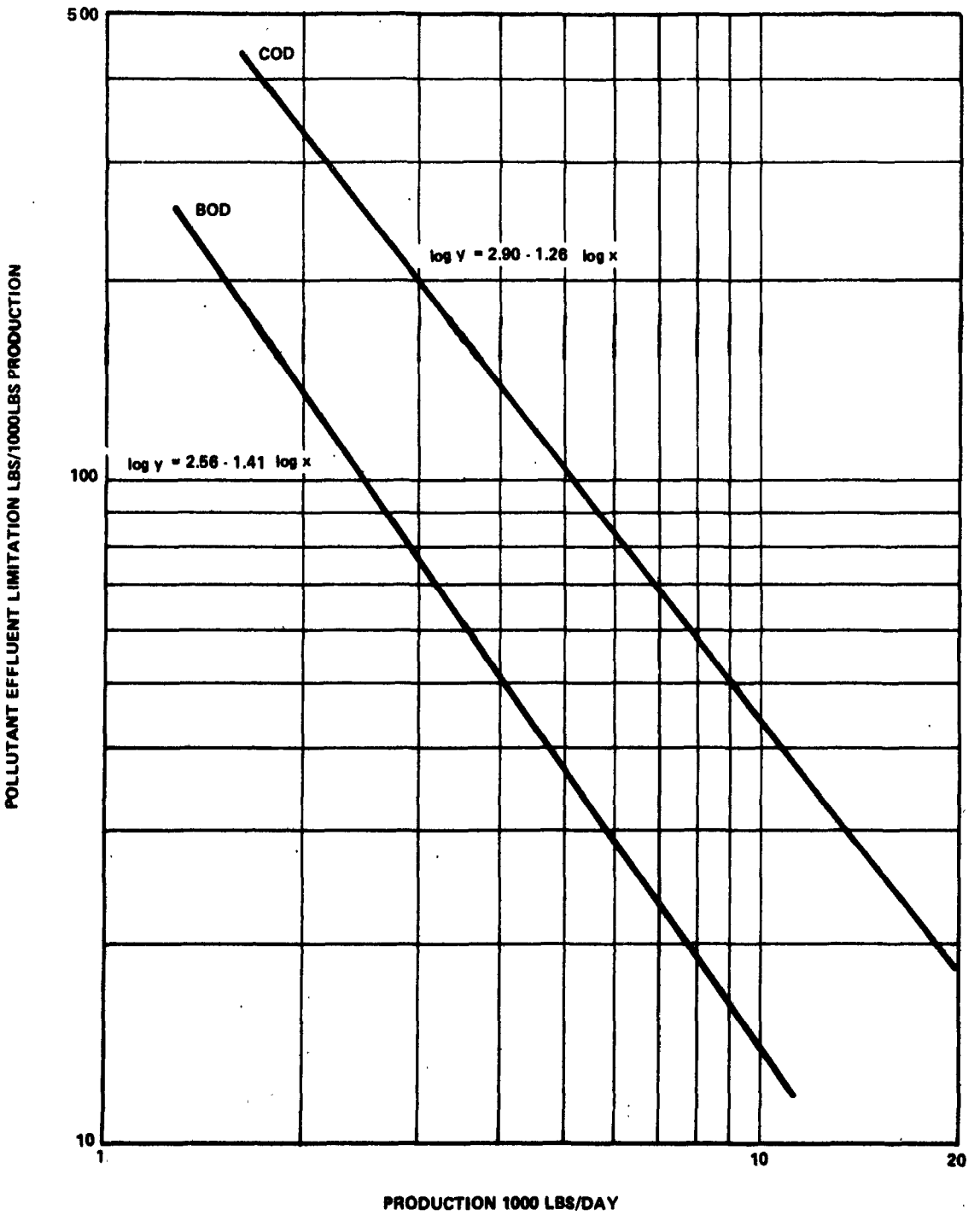

NOTICE: THESE ARE TENTATIVE RECOMMENDATIONS BASED UPON INFORMATION IN THIS REPORT AND ARE SUBJECT TO CHANGE BASED UPON COMMENTS RECEIVED AND FURTHER INTERNAL REVIEW BY EPA.

FIGURE IIA-3

CATEGORY A - BADCT EFFLUENT

LIMITATIONS
VS
PRODUCTION

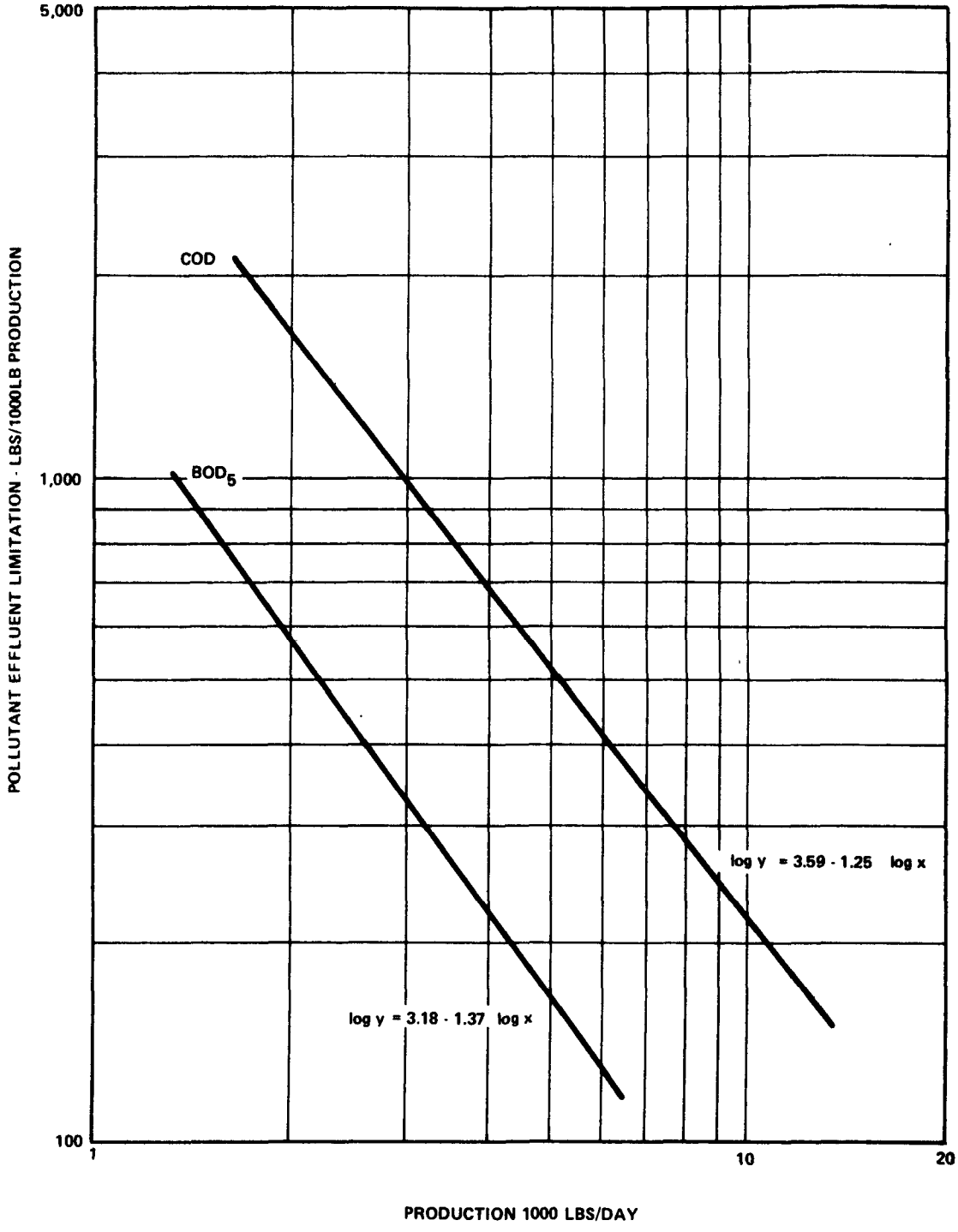

NOTICE: THESE ARE TENTATIVE RECOMMENDATIONS BASED UPON INFORMATION IN THIS REPORT AND ARE SUBJECT TO CHANGE BASED UPON COMMENTS RECEIVED AND FURTHER INTERNAL REVIEW BY EPA.

Table IIA-1

BPCTCA Effluent Limitations Guidelines

Pharmaceutical Industry

Subcategory	Effluent Characteristic	Effluent Limitations: Average of Daily Values for 30 Consecutive Days Shall not Exceed kg/kkg[1]	Effluent Limitations: Average of Daily Values for 30 Consecutive Days Shall not Exceed mg/L	Effluent Limitations: Maximum for Any One Day kg/kkg	Effluent Limitations: Maximum for Any One Day mg/L
A	BOD_5	Avg. Daily* x 2.3		Avg. Daily* x 4.1	
	COD	Avg. Daily* x 2.1		Avg. Daily* x 2.9	
	TSS		130		250
B	BOD_5	23.2		41.4	
	COD	62.2		85.8	
	TSS		52		100
C_1	BOD_5	48.5		86.5	
	COD	132.0		182.0	
	TSS		130		250
C_2	BOD_5	120		213	
	COD	139		191	
	TSS		52		100
D	BOD_5	1.31		2.34	
	COD	3.40		4.70	
	TSS		52		100
E[2]	BOD_5	0.28 (0.058)		0.49 (0.103)	
	COD	0.84 (0.170)		1.16 (0.235)	
	TSS		52		100

*From Figure IIA-1

[1] kg/kkg Production is equivalent to lbs/1,000 lbs production

[2] Effluent limitations for subcategory E are based on total gross floor area in terms of kg/1,000 m^2 (lb/1,000 ft^2)

NOTICE: THESE ARE TENTATIVE RECOMMENDATIONS BASED UPON INFORMATION IN THIS REPORT AND ARE SUBJECT TO CHANGE BASED UPON COMMENTS RECEIVED AND FURTHER INTERNAL REVIEW BY EPA.

DRAFT

Table IIA-2

BATEA Effluent Limitations Guidelines

Pharmaceutical Industry

Subcategory	Effluent Characteristic	Effluent Limitations: Average of Daily Values for 30 Consecutive Days Shall not Exceed kg/kkg[1]	Effluent Limitations: Average of Daily Values for 30 Consecutive Days Shall not Exceed mg/L	Effluent Limitations: Maximum for Any One Day kg/kkg	Effluent Limitations: Maximum for Any One Day mg/L
A	BOD_5	Avg. Daily* x 2.3		Avg. Daily* x 4.1	
	COD	Avg. Daily* x 2.1		Avg. Daily* x 2.9	
	TSS		52		100
B	BOD_5	20.5		36.6	
	COD	49.4		68.2	
	TSS		26		50
C_1	BOD_5	10.6		18.9	
	COD	24.2		33.4	
	TSS		52		100
C_2	BOD_5	120		213	
	COD	139		191	
	TSS		52		100
D	BOD_5	1.24		2.21	
	COD	3.07		4.23	
	TSS		26		50
E[2]	BOD_5	0.23 (0.048)		0.41 (0.086)	
	COD	0.57 (0.116)		0.78 (0.160)	
	TSS		26		50

*From Figure IIA-2

[1] kg/kkg Production is equivalent to lbs/1,000 lbs production

[2] Effluent limitations for subcategory E are based on total gross floor area in terms of kg/1,000 m^2 (lb/1,000 ft^2)

NOTICE: THESE ARE TENTATIVE RECOMMENDATIONS BASED UPON INFORMATION IN THIS REPORT AND ARE SUBJECT TO CHANGE BASED UPON COMMENTS RECEIVED AND FURTHER INTERNAL REVIEW BY EPA.

DRAFT

Table IIA-3

BADCT Effluent Limitations Guidelines

Pharmaceutical Industry

Subcategory	Effluent Characteristic	Effluent Limitations: Average of Daily Values for 30 Consecutive Days Shall not Exceed kg/kkg[1]	Effluent Limitations: Average of Daily Values for 30 Consecutive Days Shall not Exceed mg/L	Effluent Limitations: Maximum for Any One Day kg/kkg	Effluent Limitations: Maximum for Any One Day mg/L
A	BOD_5	Avg. Daily* x 2.3		Avg. Daily* x 4.1	
	COD	Avg. Daily* x 2.1		Avg. Daily* x 2.9	
	TSS		52		100
B	BOD_5	20.5		36.61	
	COD	49.4		68.15	
	TSS		52		50
C_1	BOD_5	46.2		82.4	
	COD	121.0		167.0	
	TSS		52		100
C_2	BOD_5	120		213	
	COD	139		191	
	TSS		52		100
D	BOD_5	1.24		2.21	
	COD	3.07		4.23	
	TSS		26		50
E[2]	BOD_5	0.23 (0.048)		0.41 (0.086)	
	COD	0.57 (0.116)		0.78 (0.160)	
	TSS		26		50

*From Figure IIA-3

[1] kg/kkg Production is equivalent to lbs/1,000 lbs production

[2] Effluent limitations for subcategory E are based on total gross floor area in terms of kg/1,000 m^2 (lb/1,000 ft^2)

NOTICE: THESE ARE TENTATIVE RECOMMENDATIONS BASED UPON INFORMATION IN THIS REPORT AND ARE SUBJECT TO CHANGE BASED UPON COMMENTS RECEIVED AND FURTHER INTERNAL REVIEW BY EPA.

DRAF

B. Gum and Wood Chemicals Industry

Implicit in the recommended guidelines for the Gum and Wood Chemicals industry is the fact that process wastes can be isolated from uncontaminated wastes such as utility discharges and uncontaminated storm runoff. Isolation of process wastewater is generally the first recommended step in accomplishing the reductions necessary to meet the proposed guidelines. Treatment of uncontaminated wastewaters together with contaminated process wastewaters in a treatment facility is not generally cost-effective.

Effluent limitations guidelines commensurate with BPCTCA are presented for each subcategory of the Gum and Wood Chemicals industry in Table IIB-1. The effluent limitations guidelines were derived on the basis of the maximum average of daily values for thirty consecutive days and the maximum for any one day and have been developed on the basis of the performance factors for treatment plant operation as discussed in Section XIII of this draft development document. Process wastewaters subject to these limitations do not include noncontact sources such as boiler and cooling water blowdown, sanitary, and other similar flows. BPCTCA also includes the maximum utilization of applicable in-plant pollution abatement technology to minimize capital expenditures for end-of-pipe wastewater treatment facilities. End-of-pipe technology for BPCTCA involves the application of biological treatment, as typified by activated sludge or aerated lagoons with sedimentation ponds.

Effluent limitations guidelines to be attained by application of the BATEA are presented in Table IIB-2. End-of-pipe treatment for BATEA includes the addition of an activated carbon system to the BPCTCA treatment processes. Exemplary in-process controls are also applicable to this technology. It is emphasized that the model treatment system does not preclude the use of activated carbon within the plant for recovery of products, by-products, and catalysts.

The best available demonstrated control technology (BADCT) for new sources includes the most exemplary process controls, as previously enumerated, with biological waste treatment followed by filtration for removal of suspended solids. Effluent limitations guidelines for subcategories within the Gum and Wood Chemicals industry are presented in Table IIB-3.

NOTICE: THESE ARE TENTATIVE RECOMMENDATIONS BASED UPON INFORMATION IN THIS REPORT AND ARE SUBJECT TO CHANGE BASED UPON COMMENTS RECEIVED AND FURTHER INTERNAL REVIEW BY EPA.

Table IIB-1

BPCTCA Effluent Limitations Guidelines

Gum and Wood Chemicals Industry

Subcategory	Effluent Characteristic	Effluent Limitations: Average of Daily Values for 30 Consecutive Days Shall not Exceed kg/kkg[1]	Effluent Limitations: Average of Daily Values for 30 Consecutive Days Shall not Exceed mg/L	Effluent Limitations: Maximum for Any One Day kg/kkg	Effluent Limitations: Maximum for Any One Day mg/L
A		No Discharge of process wastewater pollutants			
B	BOD_5	0.37		0.70	
	COD	3.63		7.04	
	TSS		85		140
C	BOD_5	0.54		1.02	
	COD	5.44		10.54	
	TSS		85		140
D	BOD_5	0.27		.51	
	COD	3.06		5.92	
	TSS		85		140
E	BOD_5	6.02		11.3	
	COD	37.6		72.8	
	TSS		85		140
F	BOD_5	0.37		0.70	
	COD	3.71		7.19	
	TSS		85		140

[1] kg/kkg Production is equivalent to lbs/1,000 lbs production

NOTICE: THESE ARE TENTATIVE RECOMMENDATIONS BASED UPON INFORMATION IN THIS REPORT AND ARE SUBJECT TO CHANGE BASED UPON COMMENTS RECEIVED AND FURTHER INTERNAL REVIEW BY EPA.

Table IIB-2

BATEA Effluent Limitations Guidelines

Gum and Wood Chemicals Industry

Subcategory	Effluent Characteristic	Effluent Limitations: Average of Daily Values for 30 Consecutive Days Shall not Exceed kg/kkg[1]	Effluent Limitations: Average of Daily Values for 30 Consecutive Days Shall not Exceed mg/L	Effluent Limitations: Maximum for Any One Day kg/kkg	Effluent Limitations: Maximum for Any One Day mg/L
A		No Discharge of process wastewater pollutants			
B	BOD_5	0.11		0.14	
	COD	1.09		1.36	
	TSS		34		40
C	BOD_5	0.16		0.20	
	COD	1.63		2.04	
	TSS		34		40
D	BOD_5	0.082		0.10	
	COD	0.91		1.14	
	TSS		34		40
E	BOD_5	1.80		2.23	
	COD	11.3		14.1	
	TSS		34		40
F	BOD_5	0.11		0.14	
	COD	1.12		1.40	
	TSS		34		40

[1] kg/kkg Production is equivalent to lbs/1,000 lbs production

NOTICE: THESE ARE TENTATIVE RECOMMENDATIONS BASED UPON INFORMATION IN THIS REPORT AND ARE SUBJECT TO CHANGE BASED UPON COMMENTS RECEIVED AND FURTHER INTERNAL REVIEW BY EPA.

DRAFT

Table IIB-3

BADCT Effluent Limitations Guidelines

Gum and Wood Chemicals Industry

Subcategory	Effluent Characteristic	Effluent Limitations: Average of Daily Values for 30 Consecutive Days Shall not Exceed kg/kkg[1]	Effluent Limitations: Average of Daily Values for 30 Consecutive Days Shall not Exceed mg/L	Effluent Limitations: Maximum for Any One Day kg/kkg	Effluent Limitations: Maximum for Any One Day mg/L
A		No Discharge of process wastewater pollutants			
B	BOD_5	0.34		0.42	
	COD	3.15		3.94	
	TSS		34		40
C	BOD_5	0.49		0.61	
	COD	4.74		5.92	
	TSS		34		40
D	BOD_5	0.26		0.32	
	COD	2.66		3.32	
	TSS		34		40
E	BOD_5	5.54		6.85	
	COD	32.6		40.8	
	TSS		34		40
F	BOD_5	0.34		0.42	
	COD	3.23		4.04	
	TSS		34		40

[1] kg/kkg Production is equivalent to lbs/1,000 lbs production

NOTICE: THESE ARE TENTATIVE RECOMMENDATIONS BASED UPON INFORMATION IN THIS REPORT AND ARE SUBJECT TO CHANGE BASED UPON COMMENTS RECEIVED AND FURTHER INTERNAL REVIEW BY EPA.

C. Pesticides and Agricultural

The effluent limitations guidelines commensurate with BPCTCA, BATEA and New Source treatment technology proposed for each subcategory of the Pesticides and Agricultural Chemicals industry are presented in Tables IIC-1, IIC-2 and IIC-3. The effluent limitations guidelines were derived on the basis of the maximum average of daily values for thirty consecutive days and the maximum for any one day, and on the basis of the performance factors for the treatment plant operation as discussed in Section XIII of this draft development document. Process wastewaters subject to these limitations include all contact process water, but do not include noncontact sources, such as boiler and cooling water blowdowns, sanitary wastes, and other similar nonprocess sources.

Implicit in BPCTCA standards is the segregation of noncontact wastewaters from process wastewaters and the maximum utilization of applicable in-plant pollution abatement technologies required to minimize capital expenditures for end-of-pipe wastewater treatment facilities. Segregation and incineration of extremely toxic wastewaters or very strong wastewaters are recommended.

End-of-process technology for BPCTCA involves the application of biological treatment, preceded by various types of pretreatment, depending on the particular subcategory. Extensive pretreatment systems are required due to the toxic nature of many pesticides wastewaters. Equalization with pH control and oil separation may be required in order to provide optimal, as well as uniform, levels of treatment. Chemical flocculation aids, when necessary, should be added to the clarification system in order to control suspended solids levels.

End-of-process treatment for BATEA includes the addition of filtration and activated carbon systems to BPCTCA treatment processes.

The BADCT for new sources includes in-plant controls with BPCTCA systems followed by filtration for additional removal of suspended solids.

NOTICE: THESE ARE TENTATIVE RECOMMENDATIONS BASED UPON INFORMATION IN THIS REPORT AND ARE SUBJECT TO CHANGE BASED UPON COMMENTS RECEIVED AND FURTHER INTERNAL REVIEW BY EPA.

Table IIC-1

BPCTCA Effluent Limitations Guidelines

Pesticides and Agricultural Chemicals Industry

Subcategory	Effluent Characteristic	Effluent Limitations: Average of Daily Values for 30 Consecutive Days Shall not Exceed kg/kkg[1]	Effluent Limitations: Average of Daily Values for 30 Consecutive Days Shall not Exceed mg/L	Effluent Limitations: Maximum for Any One Day kg/kkg	Effluent Limitations: Maximum for Any One Day mg/L
A	BOD_5	1.01		1.80	
	Phenol	0.0015		0.002	
	TSS		84		156
B	BOD_5	1.68		2.99	
	Total-P	0.17		0.23	
	TKN	0.50		0.70	
	Phenol	0.0015		0.002	
	Cyanide[2]	0.00078		0.001	
	TSS		84		156
C	BOD_5	2.12		3.77	
	TKN	1.30		1.80	
	Cyanide[2]	0.00076		0.0010	
	TSS		84		156
D	BOD_5	4.6		8.2	
	TKN	2.81		3.89	
	Metals[3]	0.0029		0.004	
	TSS		84		156
E_1	BOD_5	0.92		1.64	
	TKN	0.029		0.04	
	TSS		84		156
E_2	No Discharge of process wastewater pollutants				

[1] kg/kkg Production is equivalent to lbs/1,000 lbs production
[2] Only applicable when cyanide compounds can enter the effluent.
[3] Limitations are applicable individually for each metal that can enter the effluent.

NOTICE: THESE ARE TENTATIVE RECOMMENDATIONS BASED UPON INFORMATION IN THIS REPORT AND ARE SUBJECT TO CHANGE BASED UPON COMMENTS RECEIVED AND FURTHER INTERNAL REVIEW BY EPA.

DRAFT

Table IIC-2

BATEA Effluent Limitations Guidelines

Pesticides and Agricultural Chemicals Industry

Subcategory	Effluent Characteristic	Effluent Limitations: Average of Daily Values for 30 Consecutive Days Shall not Exceed kg/kkg[1]	Effluent Limitations: Average of Daily Values for 30 Consecutive Days Shall not Exceed mg/L	Effluent Limitations: Maximum for Any One Day kg/kkg	Effluent Limitations: Maximum for Any One Day mg/L
A	BOD_5	1.01		1.80	
	Phenol	0.0015		0.0020	
	COD	1.53		2.12	
	TSS		42		78
B	BOD_5	1.68		2.99	
	Total-P	0.17		2.23	
	TKN	0.50		0.70	
	Phenol	0.0015		0.002	
	Cyanide[2]	0.00078		0.0010	
	COD	2.56		3.54	
	TSS		42		78
C	BOD_5	2.12		3.77	
	TKN	1.30		1.80	
	Cyanide[2]	0.00076		0.0010	
	COD	6.43		8.87	
	TSS		42		78
D	BOD_5	4.6		8.2	
	TKN	2.81		3.89	
	Metals[3]	0.0029		0.004	
	COD	7.01		9.7	
	TSS		42		78
E_1	BOD_5	0.92		1.64	
	TKN	0.029		0.04	
	COD	0.14		0.19	
	TSS		42		78
E_2	No Discharge of process wastewater pollutants				

[1] kg/kkg production is equivalent to lbs/1,000 lbs production.
[2] Only applicable when cyanide compounds can enter the effluent.
[3] Limitations are applicable individually for each metal that can enter the effluent.

NOTICE: THESE ARE TENTATIVE RECOMMENDATIONS BASED UPON INFORMATION IN THIS REPORT AND ARE SUBJECT TO CHANGE BASED UPON COMMENTS RECEIVED AND FURTHER INTERNAL REVIEW BY EPA.

DRAFT

Table IIC-3

BADCT Effluent Limitations Guidelines

Pesticides and Agricultural Chemicals Industry

Subcategory	Effluent Characteristic	Effluent Limitations: Average of Daily Values for 30 Consecutive Days Shall not Exceed kg/kkg[1]	Effluent Limitations: Average of Daily Values for 30 Consecutive Days Shall not Exceed mg/L	Effluent Limitations: Maximum for Any One Day kg/kkg	Effluent Limitations: Maximum for Any One Day mg/L
A	BOD_5	1.01		1.80	
	Phenol	0.0015		0.0020	
	TSS		42		78
B	BOD_5	1.68		2.99	
	Total-P	0.17		0.23	
	TKN	0.50		0.70	
	Phenol	0.0015		0.0020	
	Cyanide[2]	0.00078		0.0010	
	TSS		42		78
C	BOD_5	2.12		3.77	
	TKN	1.30		1.80	
	Cyanide[2]	0.00076		0.0010	
	TSS		42		78
D	BOD_5	4.6		8.2	
	TKN	2.81		3.89	
	Metals[3]	0.0029		0.004	
	TSS		42		78
E_1	BOD_5	0.92		1.64	
	TKN	0.029		0.04	
	TSS		42		78
E_2	No Discharge of process wastewater pollutants				

[1] kg/kkg Production is equivalent to lbs/1,000 lbs production
[2] Only applicable when cyanide compounds can enter the effluent.
[3] Limitations are applicable individually for each metal that can enter the effluent.

NOTICE: THESE ARE TENTATIVE RECOMMENDATIONS BASED UPON INFORMATION IN THIS REPORT AND ARE SUBJECT TO CHANGE BASED UPON COMMENTS RECEIVED AND FURTHER INTERNAL REVIEW BY EPA.

D. Adhesive and Sealants Industry

Implicit in the recommended guidelines for the Adhesive and Sealants industry is the assumption that process wastes can be isolated from uncontaminated wastes, such as utility discharges and uncontaminated storm runoff. Isolation of process wastewater is generally the first recommended step in achieving the reductions called for by the proposed guidelines. Treatment of uncontaminated wastewaters is usually not cost-effective.

Effluent limitations guidelines commensurate with BPCTCA are presented by subcategory for the Adhesive and Sealants industry in Table IID-1. The effluent limitations guidelines are on the basis of the maximum average of daily values for thirty consecutive days and the maximum for any one day and are developed using the performance factors for the treatment plant operation as discussed in Section XIII of this draft development document.

Process wastewaters subject to these limitations include all contact process water, but do not include noncontact wastewater sources such as boiler and cooling water blowdown, sanitary wastewaters, and other similar flows. BPCTCA guidelines assume a maximum utilization of applicable in-plant pollution abatement technology to minimize capital expenditures for end-of-pipe wastewater treatment facilities. End-of-process technology for BPCTCA involves the application of biological treatment, as typified by activated sludge for subcategory A and evaporation for subcategories B and C. The recommended BPCTCA effluent limitations can be attained by these proposed systems. However, these are not the only possible effective wastewater treatment systems nor should they be construed as being totally applicable across all categories.

End-of-process technology for BATEA involves the addition of biological treatment and filtration to BPCTCA for subcategory A. BATEA and BADCT are the same as BPCTCA for subcategories B and C. Effluent limitations guidelines to be achieved by this technology are presented in Table IID-2.

It must be recognized that, in most cases, in-process modifications to existing plants are interchangeable with those which can be designed for new ones. The end-of-pipe systems specified can also be implemented interchangeable for either new plants or existing plants. BADCT involves biological treatment followed by filtration for subcategory A. Effluent limitations guidelines commensurate with this technology are presented in Table IID-3.

Each of the BATEA and BADCT effluent limitations guidelines is attainable with the treatment systems indicated; however, each plant should use those treatment systems which are applicable to its wastewater.

NOTICE: THESE ARE TENTATIVE RECOMMENDATIONS BASED UPON INFORMATION IN THIS REPORT AND ARE SUBJECT TO CHANGE BASED UPON COMMENTS RECEIVED AND FURTHER INTERNAL REVIEW BY EPA.

Table IID-1

BPCTCA Effluent Limitations Guidelines

Adhesive and Sealants Industry

Subcategory	Effluent Characteristic	Effluent Limitations: Average of Daily Values for 30 Consecutive Days Shall not Exceed		Effluent Limitations: Maximum for Any One Day	
		kg/kkg[1]	mg/L	kg/kkg	mg/L
A	BOD_5	152		270	
	COD	370		510	
	TSS		130		250
B	BOD_5	0.55		0.98	
	COD	2.29		3.16	
	TSS		52		100
C	BOD_5	0.71		1.27	
	COD	1.07		1.48	
	TSS		52		100
D		No Discharge of process wastewater pollutants			
E		No Discharge of process wastewater pollutants			
F		No Discharge of process wastewater pollutants			

[1] kg/kkg Production is equivalent to lbs/1,000 lbs production

NOTICE: THESE ARE TENTATIVE RECOMMENDATIONS BASED UPON INFORMATION IN THIS REPORT AND ARE SUBJECT TO CHANGE BASED UPON COMMENTS RECEIVED AND FURTHER INTERNAL REVIEW BY EPA.

Table IID-2

BATEA Effluent Limitations Guidelines

Adhesive and Sealants Industry

Subcategory	Effluent Characteristic	Effluent Limitations: Average of Daily Values for 30 Consecutive Days Shall not Exceed kg/kkg[1]	Effluent Limitations: Average of Daily Values for 30 Consecutive Days Shall not Exceed mg/L	Effluent Limitations: Maximum for Any One Day kg/kkg	Effluent Limitations: Maximum for Any One Day mg/L
A	BOD_5	52.5		97.5.	
	COD	140		261	
	TSS		52		100
B	BOD_5	0.50		0.94	
	COD	2.29		4.25	
	TSS		52		100
C	BOD_5	0.65		1.21	
	COD	1.07		1.99	
	TSS		52		100
D		No Discharge of process wastewater pollutants			
E		No Discharge of process wastewater pollutants			
F		No Discharge of process wastewater pollutants			

[1] kg/kkg Production is equivalent to lbs/1,000 lbs production

NOTICE: THESE ARE TENTATIVE RECOMMENDATIONS BASED UPON INFORMATION IN THIS REPORT AND ARE SUBJECT TO CHANGE BASED UPON COMMENTS RECEIVED AND FURTHER INTERNAL REVIEW BY EPA.

Table IID-3

BADCT Effluent Limitations Guidelines

Adhesive and Sealants Industry

Subcategory	Effluent Characteristic	Effluent Limitations: Average of Daily Values for 30 Consecutive Days Shall not Exceed kg/kkg[1]	Effluent Limitations: Average of Daily Values for 30 Consecutive Days Shall not Exceed mg/L	Effluent Limitations: Maximum for Any One Day kg/kkg	Effluent Limitations: Maximum for Any One Day mg/L
A	BOD_5	137		254	
	COD	357		663	
	TSS		52		100
B	BOD_5	0.50		0.94	
	COD	2.29		4.25	
	TSS		52		100
C	BOD_5	0.65		1.21	
	COD	1.07		1.99	
	TSS		52		100
D		No Discharge of process wastewater pollutants			
E		No Discharge of process wastewater pollutants			
F		No Discharge of process wastewater pollutants			

[1] kg/kkg Production is equivalent to lbs/1,000 lbs production

NOTICE: THESE ARE TENTATIVE RECOMMENDATIONS BASED UPON INFORMATION IN THIS REPORT AND ARE SUBJECT TO CHANGE BASED UPON COMMENTS RECEIVED AND FURTHER INTERNAL REVIEW BY EPA.

E. Explosives Industry

The BPCTCA treatment technology recommended for the Explosives industry is a biological treatment system. This treatment system is designed to attain the BPCTCA effluent limitations guidelines presented in Table IIE-1.

BATEA treatment technology is defined as filtration and activated carbon added on to the BPCTCA treatment system. This treatment system is designed to attain the BATEA effluent limitations guidelines presented in Table IIE-2.

New source performance standards (BADCT) can be achieved by filtration added on to the BPCTCA treatment system. Effluent limitations guidelines for BADCT are shown in Table IIE-3. The effluent limitations guidelines are on the basis of the maximum average of daily values for thirty consecutive days and the maximum for any one day and are developed using the performance factors for the treatment plant operation as discussed in Section XIII of this draft development document.

It is recommended that wastewater from explosives plants be treated on-site. If municipal treatment is highly advantageous over on-site treatment, a pretreatment system must be designed to remove potentially hazardoud explosives wastes. Performance factors for BOD_5 and COD have been computed from historical data. For TSS, performance factors from the Pharmaceutical industry have been used, and it has been assumed that these data are similar.

NOTICE: THESE ARE TENTATIVE RECOMMENDATIONS BASED UPON INFORMATION IN THIS REPORT AND ARE SUBJECT TO CHANGE BASED UPON COMMENTS RECEIVED AND FURTHER INTERNAL REVIEW BY EPA.

Table IIE-1

BPCTCA Effluent Limitations Guidelines

Explosives Industry

Subcategory	Effluent Characteristic	Effluent Limitations: Average of Daily Values for 30 Consecutive Days Shall not Exceed kg/kkg[1]	Effluent Limitations: Average of Daily Values for 30 Consecutive Days Shall not Exceed mg/L	Effluent Limitations: Maximum for Any One Day kg/kkg	Effluent Limitations: Maximum for Any One Day mg/L
A_1	BOD_5	0.21		0.39	
	COD	2.27		4.21	
	TSS		130		100
A_2	BOD_5	9.32		17.3	
	COD	47.9		88.9	
	TSS		52		100
B	BOD_5	.0006		.001	
	COD	.055		.101	
	TSS		52		100
C	BOD_5	185		344	
	COD	3840		7140	
	TSS		130		250

[1] kg/kkg Production is equivalent to lbs/1,000 lbs production

NOTICE: THESE ARE TENTATIVE RECOMMENDATIONS BASED UPON INFORMATION IN THIS REPORT AND ARE SUBJECT TO CHANGE BASED UPON COMMENTS RECEIVED AND FURTHER INTERNAL REVIEW BY EPA.

Table IIE-2

BATEA Effluent Limitations Guidelines

Explosives Industry

Subcategory	Effluent Characteristic	Effluent Limitations: Average of Daily Values for 30 Consecutive Days Shall not Exceed		Effluent Limitations: Maximum for Any One Day	
		kg/kkg[1]	mg/L	kg/kkg	mg/L
A_1	BOD_5	.066		.11	
	COD	.54		.88	
	TSS		52		100
A_2	BOD_5	2.93		4.74	
	COD	16.3		26.3	
	TSS		52		100
B	BOD_5	.0002		.0003	
	COD	.012		.019	
	TSS		52		100
C	BOD_5	58.3		94.4	
	COD	932		151.	
	TSS		52		100

[1] kg/kkg Production is equivalent to lbs/1,000 lbs production

NOTICE: THESE ARE TENTATIVE RECOMMENDATIONS BASED UPON INFORMATION IN THIS REPORT AND ARE SUBJECT TO CHANGE BASED UPON COMMENTS RECEIVED AND FURTHER INTERNAL REVIEW BY EPA.

Table IIE-3

BADCT Effluent Limitations Guidelines

Explosives Industry

Subcategory	Effluent Characteristic	Effluent Limitations: Average of Daily Values for 30 Consecutive Days Shall not Exceed		Effluent Limitations: Maximum for Any One Day	
		kg/kkg[1]	mg/L	kg/kkg	mg/L
A_1	BOD_5	.22		3.5	
	COD	2.2		3.6	
	TSS		26		50
A_2	BOD_5	9.63		15.6	
	COD	68.5		111	
	TSS		26		50
B	BOD_5	.0006		.001	
	COD	.054		.088	
	TSS		26		50
C	BOD_5	191.		310	
	COD	3750		6070	
	TSS		52		100

[1] kg/kkg Production is equivalent to lbs/1,000 lbs production

NOTICE: THESE ARE TENTATIVE RECOMMENDATIONS BASED UPON INFORMATION IN THIS REPORT AND ARE SUBJECT TO CHANGE BASED UPON COMMENTS RECEIVED AND FURTHER INTERNAL REVIEW BY EPA.

F. Carbon Black Industry

Implicit in the recommended effluent limitations guidelines for the Carbon Black industry is the assumption that process wastes can be isolated from uncontaminated wastes such as utility discharges and uncontaminated storm runoff. Isolation of process wastewater is generally the first recommended step in accomplishing the reductions necessary to meet the proposed guidelines. Treatment of uncontaminated wastewaters in a treatment facility is not generally cost-effective.

Effluent limitations guidelines commensurate with BPCTCA are presented for each subcategory of the Carbon Black industry in Table IIF-1. Process wastewaters subject to these limitations include all contact process water but do not include noncontact sources such as boiler and cooling water blowdown, sanitary and other similar flows. Additionally, BPCTCA includes the maximum utilization of applicable in-plant pollution abatement technology to minimize capital expenditures for end-of-pipe wastewater treatment facilities. End-of-process technology for BPCTCA involves the application of sedimentation/evaporation ponds, or mechanical gravity settlers, where applicable.

The Best Available Demonstrated Control Technology (BADCT) for new sources includes gravity sedimentation/evaporation ponds, or mechanical gravity settlers followed by filtration. BADCT effluent limitations guidelines for subcategories within the Carbon Black industry are presented in Table IIF-2.

Effluent limitations guidelines to be attained by the application of BATEA are presented in Table IIF-2 as well. End-of-process treatment for BATEA includes the addition of filtration to the BPCTCA treatment processes. It is emphasized that the model treatment system does not preclude the use of other applicable technology.

NOTICE: THESE ARE TENTATIVE RECOMMENDATIONS BASED UPON INFORMATION IN THIS REPORT AND ARE SUBJECT TO CHANGE BASED UPON COMMENTS RECEIVED AND FURTHER INTERNAL REVIEW BY EPA.

Table IIF-1

BPCTCA Effluent Limitations Guidelines

Carbon Black Industry

Subcategory	Effluent Characteristic	Effluent Limitations: Average of Daily Values for 30 Consecutive Days Shall not Exceed		Effluent Limitations: Maximum for Any One Day	
		kg/kkg[1]	mg/L	kg/kkg	mg/L
A	N/A				
B	TSS		--[2]		--[2]

[1] kg/kkg Productions is equivalent to lbs/1,000 lbs Production.
[2] Variability data unavailable, but will be developed with experience in the industry.

Data for developing performance factors for treatment plant operation are not available, but needs to be developed with experience in the industry.

NOTICE: THESE ARE TENTATIVE RECOMMENDATIONS BASED UPON INFORMATION IN THIS REPORT AND ARE SUBJECT TO CHANGE BASED UPON COMMENTS RECEIVED AND FURTHER INTERNAL REVIEW BY EPA.

Table IIF-2

BATEA and BADCT Effluent Limitations Guidelines

Carbon Black Industry

Subcategory	Effluent Characteristic	Effluent Limitations: Average of Daily Values for 30 Consecutive Days Shall not Exceed		Effluent Limitations: Maximum for Any One Day	
		kg/kkg[1]	mg/L	kg/kkg	mg/L
A	N/A				
B	TSS		--[2]		--[2]

[1] kg/kkg Production is equivalent to lbs/1,000 lbs Production.
[2] Variability data unavailable, but will be developed with experience in the industry.

Data for developing performance factors for treatment plant operations are not available, but needs to be developed with experience in the industry.

NOTICE: THESE ARE TENTATIVE RECOMMENDATIONS BASED UPON INFORMATION IN THIS REPORT AND ARE SUBJECT TO CHANGE BASED UPON COMMENTS RECEIVED AND FURTHER INTERNAL REVIEW BY EPA.

G. Photographic Processing Industry

The BPCTCA, BATEA, and BADCT effluent limitations proposed for the Photographic Processing industry are presented in Tables IIG-1 and IIG-2. These effluent limitations guidelines are on the basis of the maximum average of daily values for thirty consecutive days and the maximum for any one day and are developed using the performance factors for the treatment plant operation as discussed in Section XIII of this draft development document.

Wastewaters subject to these limitations include all contact process water, but do not include sanitary wastewaters.

Implicit in the recommended guidelines for the Photographic Processing industry is the use of in-plant measures to reduce silver and ferrocyanide. In-plant modifications which will lead to reductions in wastewater flow, increased quantity of water used for recycle, and improvement in raw wastewater quality should also be implemented to make end-of-pipe treatment cost-effective.

End-of pipe treatment technologies equivalent to biological treatment should be utilized by the Photographic Processing industry to achieve BPCTCA effluent limitations guidelines.

To meet BATEA and BADCT effluent limitations guidelines end-of-pipe treatment technologies equivalent to BPCTCA treatment followed by dual-media filtration is recommended. Exemplary in-plant pollutant abatement measures are also applicable to these technologies.

Most Photographic Processing plants discharge their effluents to municipal sewer systems. Although organic material is the predominant pollutant in these wastewaters, certain constituents (i.e., silver and ferrocyanide) which could exert toxic effects on a biological system and various non-biodegradable material may also be present. Therefore, in-plant measures or pretreatment to reduce the concentrations of such contaminants to levels acceptable to local authority should be utilized.

NOTICE: THESE ARE TENTATIVE RECOMMENDATIONS BASED UPON INFORMATION IN THIS REPORT AND ARE SUBJECT TO CHANGE BASED UPON COMMENTS RECEIVED AND FURTHER INTERNAL REVIEW BY EPA.

Table IIG-1

BPCTCA Effluent Limitations Guidelines

Photographic Processing Industry

Subcategory	Effluent Characteristic	Effluent Limitations: Average of Daily Values for 30 Consecutive Days Shall not Exceed		Effluent Limitations: Maximum for Any One Day
		kg/1,000 m^2 (lb/1,000 ft^2)	mg/L	kg/1,000 m^2 (lb/1,000 ft^2)
Entire Industry	BOD_5	11.3 (2.3)		21.1 (4.32)
	COD	135 (27.7)		252 (51.5)
	TSS		52	
	Silver Thiosulfate (as Ag^+)	.038 (.008)		.073 (.015)
	Ferrocyanide		3.5	

NOTICE: THESE ARE TENTATIVE RECOMMENDATIONS BASED UPON INFORMATION IN THIS REPORT AND ARE SUBJECT TO CHANGE BASED UPON COMMENTS RECEIVED AND FURTHER INTERNAL REVIEW BY EPA.

Table IIG-2

BATEA and BADCT Effluent Limitations Guidelines

Photographic Processing Industry

Subcategory	Effluent Characteristic	Effluent Limitations: Average of Daily Values for 30 Consecutive Days Shall not Exceed		Effluent Limitations: Maximum for Any One Day	
		kg/1,000 m^2 (lb 1,000 ft^2)	mg/L	kg/1,000 m^2 (lb/1,000 ft^2)	mg/L
Entire Industry	BOD_5	7.6 (1.96)		14.0 (2.87)	
	COD	108 (22.3)		201 (41.3)	
	TSS		26		50
	Silver Thiosulfate (as Ag^+)	.038 (.008)		.073 (.015)	
	Ferrocyanide		3.5		6.8

NOTICE: THESE ARE TENTATIVE RECOMMENDATIONS BASED UPON INFORMATION IN THIS REPORT AND ARE SUBJECT TO CHANGE BASED UPON COMMENTS RECEIVED AND FURTHER INTERNAL REVIEW BY EPA.

H. Hospitals

Effluent limitations guidelines commensurate with BPCTCA, BADCT, and BATEA treatment technology are proposed for the Hospitals category and are presented in Table IIH-1. These effluent limitations guidelines are on the basis of the maximum average of daily values for thirty consecutive days and the maximum for any one day and are developed using the performance factors for the treatment plant operation as discussed in Section XIII of this draft development document.

Wastewaters subject to these limitations include the total combined wastewater stream generated by a hospital facility.

End-of-pipe treatment technologies equivalent to biological treatment should be applied to the wastewaters from hospital facilities to achieve BPCTCA effluent limitations. In addition, to minimize capital expenditures for end-of-pipe wastewater treatment facilities, BPCTCA technology includes the maximum utilization of current in-house pollution abatement methods presently practiced by hospitals.

To meet BADCT and BATEA limitations guidelines, end-of-pipe treatment technologies equivalent to biological treatment followed by multimedia filtration is recommended. BADCT and BATEA treatment technologies also include the use of the most exemplary in-house pollution abatement measures and the improvement of existing in-house measures.

Most hospital facilities discharge their effluents to municipal sewer systems. Although organic material is the predominant pollutant in these wastewaters, mercury, barium, boron, silver, and various solvents may also be present.

NOTICE: THESE ARE TENTATIVE RECOMMENDATIONS BASED UPON INFORMATION IN THIS REPORT AND ARE SUBJECT TO CHANGE BASED UPON COMMENTS RECEIVED AND FURTHER INTERNAL REVIEW BY EPA.

Table IIH-1

BPCTCA, BADCT and BATEA Effluent Limitations Guidelines

Hospitals

Subcategory	Effluent Characteristic	Effluent Limitations: Average of Daily Values for 30 Consecutive Days Shall not Exceed		Effluent Limitations: Maximum for Any One Day	
		kg/1,000 (lb/1,000 occupied beds)	mg/L	kg/1,000 (lb/1,000 occupied beds)	mg/L
	BOD_5	26 (58)		30 (66)	
	TSS		28		30
		BADCT and BATEA Effluent Limitations			
	BOD_5	16.9 (37.2)		19.4 (42.6)	
	TSS		14		15

NOTICE: THESE ARE TENTATIVE RECOMMENDATIONS BASED UPON INFORMATION IN THIS REPORT AND ARE SUBJECT TO CHANGE BASED UPON COMMENTS RECEIVED AND FURTHER INTERNAL REVIEW BY EPA.

SECTION III

INTRODUCTION

Purpose and Authority

The Federal Water Pollution Control Act Amendments of 1972 (the Act) made a number of fundamental changes in the approach to achieving clean water. One of the most significant changes was to shift from a reliance on water quality related effluent limitations to a direct control of effluents through the establishment of technology-based effluent limitations to form an additional basis, as a minimum, for issuance of discharge permits. The permit program under the 1899 Refuse Act was placed under full control of EPA, with much of the responsibility to be delegated to the states.

The Act requires EPA to establish guidelines for technology-based effluent limitations which must be achieved by point sources of discharges into the navigable waters of the United States. Section 301(b) of the Act requires the achievement by not later than July 1, 1977 of effluent limitations for point sources, other than publicly owned treatment works, which are based on the application of the Best Practicable Control Technology Currently Available as defined by the Administrator pursuant to Section 304(b) of the Act. Section 301(b) also requires the achievement by not later than July 1, 1983 of effluent limitations for point sources, other than publicly owned treatment works, which are based on the application of the Best Available Technology Economically Achievable which will result in reasonable further progress toward the national goal of eliminating the discharge of all pollutants, as determined in accordance with regulations issued by the Administrator pursuant to Section 304(b) of the Act. Section 306 of the Act requires the achievement by new sources of a Federal standard of performance providing for the control of the discharge of pollutants which reflects the greatest degree of effluent reduction which the Administrator determines to be achievable through the application of the Best Available Demonstrated Control Technology, processes, operating methods, or other alternatives, including, where practicable, a standard permitting no discharge of pollutants.

Section 304(b) of the Act requires the Administrator to publish regulations providing limitations setting forth the degree of effluent reduction attainable through the application of the Best Practicable Control Technology Currently Available and the degree of effluent reduction attainable through the application of the best control measures and practices achievable including treatment techniques, process and procedure innovations, operation methods, and other alternatives. The regulations proposed herein set forth effluent limitations guidelines pursuant to Section 304(b) of the Act for the Miscellaneous Chemicals industry.

Section 304(c) of the Act requires the Administrator to issue information on the processes, procedures, or operating methods which result in the elimination or reduction in the discharge of pollutants to implement standards of performance under Section 306 of the Act. Such information is to include technical and other data, including costs, as are available on alternative methods of elimination or reduction of the discharge of pollutants.

Section 306 of the Act requires the Administrator, within one year after a category of sources is included in a list published pursuant to Section 306(b) (1) (A) of the Act, to propose regulations establishing Federal standards of performances for new sources within such categories. The Administrator published in the Federal Register of January 16, 1973 (38 F.R. 1624), a list of 27 source categories. Publication of the list constituted announcement of the Administrator's intention of establishing, under Section 306, standards of performance applicable to new sources within the Miscellaneous Chemicals industry category, which was included within the list published January 16, 1973.

Furthermore, Section 307(b) provides that:

1. The Administrator shall, from time to time, publish proposed regulations establishing pretreatment standards for introduction of pollutants into treatment works (as defined in Section 212 of this Act) which are publicly owned, for those pollutants which are determined not to be susceptible to treatment by such treatment works or which would interfere with the operation of such treatment works. Not later than ninety days after such publication, and after opportunity for public hearing, the Administrator shall promulgate such pretreatment standards. Pretreatment standards under this subsection shall specify a time for compliance not to exceed three years from the date of promulgation and shall be established to prevent the discharge of any pollutant through treatment works (as defined in Section 212 of this Act) which are publicly owned, which pollutant interferes with, passes through, or otherwise is incompatible with such works.

2. The Administrator shall, from time to time, as control technology, processes, operating methods, or other alternatives change, revise such standards, following the procedure established by this subsection for promulgation of such standards.

3. When proposing or promulgating any pretreatment standard under this section, the Administrator shall designate the category or categories of sources to which such standard shall apply.

4. Nothing in this subsection shall affect any pretreatment requirement established by any State or local law not in conflict with any pretreatment standard established under this subsection.

In order to insure that any source introducing pollutants into a publicly owned treatment works, which source would be a new source subject to Section 306 if it were to discharge pollutants, will not cause a violation of the effluent limitations established for any such treatment works, the Administrator shall promulgate pretreatment standards for the category of such sources simultaneously with the promulgation of standards of performance under Section 306 for the equivalent category of new sources. Such pretreatment standards shall prevent the discharge into such treatment works of any pollutant which may interfere with, pass through, or otherwise be incompatible with such works.

The Act defines a new source to mean any source the construction of which is commenced after the publication of proposed regulations prescribing a standard of performance. Construction means any placement, assembly, or installation of facilities or equipment (including contractual obligations to purchase such facilities or equipment) at the premises where such equipment will be used, including preparation work at such premises.

Scope of Study

The Miscellaneous Chemicals industry was defined by EPA for the purpose of this study to include those commodities listed under the following Standard Industrial Classification (SIC):

SIC 2831 - Biological Products
SIC 2833 - Medicinal Chemicals and Botanical Products
SIC 2834 - Pharmaceutical Preparations
SIC 2861 - Gum and Wood Chemicals
SIC 2879 - Agricultural Chemicals (Formulations)
SIC 2879 - Pesticides & Agricultural Chemicals
SIC 2891 - Adhesive and Sealants
SIC 2892 - Explosives
SIC 2895 - Carbon Black
SIC 2899 - Chemicals and Chemical Preparation, Not Elsewhere Classified
SIC 7221 - Photographic Studios, Portrait
SIC 7333 - Commercial Photography, Art and Graphics
SIC 7395 - Photofinishing Laboratories
SIC 7819 - Developing and Printing of Commercial Motion Picture Film
SIC 8062 - General Medical and Surgical Hospitals
SIC 8063 - Psychiatric Hospitals
SIC 8069 - Specialty Hospitals

It must be understood that the Standard Industrial Classifications list was developed by the United States Department of Commerce and is oriented toward the collection of economic data related to gross production, sales, and unit costs. The SIC list is not related to the nature of the industry

in terms of actual plant operations, production, or considerations associated with water pollution control. As such, the list does not provide a realistic or definitive set of boundaries for study of the Miscellaneous Chemicals Industry.

The other commodities/services which could have been considered for coverage but were not covered under the scope of this study as defined by EPA are:

SIC 2844 - Cosmetic Preparations
SIC 3842 - Surgical Supplies
SIC 3843 - Dental Supplies
SIC 8071 - Medical Laboratories
SIC 8072 - Dental Laboratories
SIC 8081 - Out patient Care Facilities
SIC 8091 - Health and Allied Services, Not Elswhere Classified

Effluent limitations guidelines need to be developed at a later date to cover these commodities services not covered under the present study.

Methods Used for Development of the Effluent Limitations and Standards for Performance

The effluent limitation guidelines and standards of performance proposed in this document were developed in the following manner. The Miscellaneous Chemicals industry was first divided into industrial categories, based on type of industry and products produced. Each industrial category was further subcategorized to determine whether separate limitations and standards were appropriate for different segments within an industrial category. Such subcategorization was based upon raw material used, product produced, manufacturing process employed, and other factors.

The raw waste characteristics for each subcategory were then identified. This included an analysis of: 1) the source and volume of water used in the process employed and the sources of wastes and wastewaters in the plant: and 2) the constituents of all wastewaters (including toxic constituents and other constituents) which result in taste, odor, and color in water or aquatic organisms. The constituents of wastewaters which should be subject to effluent limitations guidelines and standards of performance were identified.

The full range of control and treatment technologies existing within each subcategory was identified. This included an identification of each distinct control and treatment technology, including both in-plant and end-of-pipe technologies, which are existent or capable of being designed for each subcategory. It also included an identification of the effluent level resulting from the application of each of the treatment and control technologies, in terms of the amount of constituents and of the chemical, physical, and biolgical characteristics of pollutants. The problems, limitations, and reliability of each treatment and control technology

and the required implementation time were also identified. In addition, the non-water-quality environmental impacts (such as the effects of the application of such technologies upon other pollution problems, including air, solid waste, and noise) were also identified. The energy requirements of each of the control and treatment technologies were identified, as well as the cost of the application of such technologies.

The information, as outlined above, was then evaluated in order to determine what levels of technology constituted the Best Practicable Control Technology Currently Available, Best Available Technology Economically Achievable, and the Best Available Demonstrated Control Technology, processes, operating methods, or other alternatives. In identifying such technologies, various factors were considered. These included the total cost of application of technology in relation to the effluent reduction benefits to be achieved from such application, the age of equipment and facilities involved, the process employed, the engineering aspects of the application of various types of control techniques, process changes, non-water-quality environmental impact (including energy requirements), and other factors.

During the initial phases of the study, an assessment was made of the availability, adequacy, and usefulness of all existing data sources. Data on the identity and performance of wastewater treatment systems were known to be included in:

1. NPDES Permit Applications.

2. Self-reporting discharge data from various states.

3. Surveys conducted by trade associations or by agencies under research and development grants.

A preliminary analysis of these data indicated an obvious need for additional information.

Refuse Act Permit Applications data are limited to identification of the treatment system used and reporting of final concentrations (which were diluted with cooling waters in many cases); consequently, operating performance could not be determined.

Additional data in the following areas were therefore required: 1) process RWL (Raw Waste Load) related to production; 2) currently practiced or potential in-process waste control techniques; and 3) the identity and effectiveness of end-of-pipe treatment systems. The best source of information was the manufacturers themselves. New information was obtained from direct interviews and sampling visits to Miscellaneous Chemicals production facilities. These additional data were obtained from direct interviews and from inspection and sampling of Miscellaneous Chemicals manufacturing and their related wastewater treatment facilities.

Collection of the data necessary for development of RWL and effluent treatment requirements within dependable confidence limits required analysis of both production and treatment operations. In a few cases, the plant visits were planned so that the production operations of a single plant could be studied in association with an end-of-pipe treatment system which receives only the wastes from that production. The RWL for this plant and associated treatment technology would fall within a single subcategory. However, wide variety of products manufactured by most of the industrial plants made this situation rare.

In the majority of cases, it was necessary to visit individual facilities where the products manufactured fell into several subcategories. The end-of-pipe treatment facilities received combined wastewaters associated with several subcategories (several products). It was necessary to analyze separately the production (waste generating) facilities and the effluent (waste treatment) facilities. This required establishment of a common basis, the Raw Waste Load (RWL), for common levels of treatment technology for the products within a subcategory and for the translation of treatment technology between subcategories.

The selection of process plants as candidates to be visited was guided by the trial subcategorization, which was based on anticipated differences in RWL. Process plants which manufacture only products within one subcategory were scheduled, as well as those which cover several subcategories, to insure the development of a dependable data base.

The selection of treatment plants was developed from identifying information available in the NPDES Permit Applications, state self-reporting discharge data, and contacts within the industry. Every effort was made to choose facilities where meaningful information on both treatment facilities and manufacturing processes could be obtained.

Survey teams composed of project engineers and scientists conducted the actual plant visits. Information on the identity and performance of wastewater treatment systems was obtained through:

1. Interviews with plant water pollution control personnel.

2. Examination of treatment plant design and historical operating data (flow rates and analyses of influent and effluent).

3. Treatment plant influent and effluent sampling.

Information on process plant operations and the associated RWL was obtained through:

1. Interviews with plant operating personnel.

2. Examination of plant design and operating data (original design specification, flow sheets, day-to-day material balances around individual process modules or unit operations where possible).

3. Individual process wastewater sampling and analysis.

The data base obtained in this manner was then utilized by the methodology previously described to develop recommended effluent limitations and standards of performance for the Miscellaneous Chemicals industry. All of the references utilized are included in Section XVI of this report. The data obtained during the field data collection program are included in Supplement B.

The following text describes the scope of the study, technical approach to the development of effluent limitation guidelines, and the scope of coverage for data base for individual industrial categories.

A. Pharmaceutical Industry

Scope of the Study

To establish boundaries for the scope of work for this study, the Pharmaceutical industry was defined to include all commodities listed under SIC 2831 (Biological Products), SIC 2833 (Medicinal Chemicals and Botanical Products), and SIC 2834 (Pharmaceutical Preparations). Lists of the specific products covered by these Standard Industrial Classifications are presented in Tables IIIA-1, IIIA-2 and IIIA-3. It should be noted that the lists as provided in these tables were developed by the United States Department of Commerce and are oriented toward the collection of economic data related to gross production, sales, and unit costs. They are not related to actual plant operations, production, or considerations associated with water pollution control, and, as such, they do not provide a set of boundaries which is completely applicable for this type of study of the Pharmaceutical industry. Therefore, to establish effluent limitations and treatment guidelines for this industry, a more definitive set of boundaries was established. To accomplish this, SIC 2833 was further subdivided into fermentation products, chemical synthesis products, and natural extractions products. This additional subdivision was required to establish a consistent interrelationship between the major manufacturing processes employed by the Pharmaceutical industry and the major medicinal chemical groups produced by the industry. During the course of the study, the following four major production areas were identified for in-depth study:

1. Fermentation processes: used to produce primarily antibiotics and steroids.

2. Biological products and natural extractions manufacturing processes: used to produce blood derivitives, vaccines, serums, animal bile derivatives, and plant tissue derivatives.

3. Chemical synthesis processes: used to produce hundreds of different products, from vitamins to anti-depressants.

4. Formulation processes: used to convert the products of the other three manufacturing areas into the final dosage forms (tablets, capsules, liquids, etc.) marketed to the public.

In addition, since research is such a large and important part of the Pharmaceutical industry, a fifth study area was established:

5. Research: including microbiological, biological, and chemical research activities.

Table IIIA-1

Biological Products - SIC 2831

Agar culture media
Aggressins
Allergenic extracts
Allergens
Antigens
Anti-hog-cholera serums
Antiserums
Antitoxins
Antivenom
Bacterial vaccines
Bacterins
Bacteriological media
Biological and allied products: antitoxins, bacterins, vaccines, viruses
Blood derivatives, for human or veterinary use
Culture media or concentrates
Diagnostic agents, biological
Diphtheria toxin
Plasmas
Pollen extracts
Serobacterins
Serums
Toxins
Toxoids
Tuberculins
Vaccines
Venoms
Viruses

Table IIIA-2

Medicinal Chemicals and Botanical Products - SIC 2833

Adrenal derivatives: bulk, uncompounded
Agar-agar (ground)
Alkaloids and salts
Anesthetics, in bulk form
Antibiotics: bulk uncompounded
Atropine and derivatives
Barbituric acid and derivatives: bulk, uncompounded
Botanical products, medicinal: ground, graded, and milled
Brucine and derivatives
Caffeine and derivatives
Chemicals, medicinal: organic and inorganic--bulk, uncompounded
Cinchone and derivatives
Cocaine and derivatives
Codeine and derivatives
Digitoxin
Drug grading, grinding, and milling
Endocrine products
Ephedrine and derivatives
Ergot alkaloids
Fish liver oils, refined and concentrated for medicinal use
Gland derivatives: bulk, uncompounded
Herb grinding, grading, andmilling
Hormones and derivatives
Insulin: bulk, uncompounded
Kelp plants
Mercury chlorides, U.S.P.
Mercury compounds, medicinal: organic and inorganic
Morphine and derivatives
N-methylpiperazine
Oils, vegetable and animal: medicinal grade--refined and concentrated
Opium derivatives
Ox bile salts and derivatives: bulk, uncompounded
Penicillin: bulk, uncompounded
Physostigmine and derivatives
Pituitary gland derivatives: bulk, uncompounded
Procaine and derivatives: bulk, uncompounded
Quinine and derivatives
Reserpines
Salicylic acid derivatives, medicinal grade
Strychnine and derivatives
Sulfa drugs
Sulfonamides
Theobromine
Vegetable gelatin (agar-agar)
Vegetable oils, medicinal grade: refined and concentrated
Vitamins, natural and synthetic: bulk, uncompounded

Table IIIA-3

Pharmaceutical Products - SIC 2834

Adrenal pharmaceutical preparations
Analgesics
Anesthetics, packaged
Antacids
Anthelmintics
Antibiotics, packaged
Antihistamine preparations
Antipyretics
Antiseptics, medicinal
Astringents, medicinal
Barbituric acid pharmaceutical preparations
Belladonna pharmaceutical preparations
Botanical extracts: powdered, pilular, solid, and fluid
Chapsticks
Chlorination tablets and kits (water purification)
Cold remedies
Cough medicines
Cyclopropane for anesthetic use (U.S.P. par N.F.) packaged
Dextrose and sodium chloride injection mixed
Dextrose injection
Digitalis pharmaceutical preparations
Diuretics
Druggists' preparations (pharmaceuticals)
Effervescent salts
Emulsifiers, fluorescent inspection
Emulsions, pharmaceutical
Ether for anesthetic use
Fever remedies
Galenical preparations
Hormone preparations
Insulin preparations
Intravenous solutions
Iodine, tincture of
Laxatives
Liniments
Lozenges, pharmaceutical
Medicines, capsuled or ampuled
Nitrofuran preparations
Nitrous oxide for anesthetic use
Ointments
Parenteral solutions
Penicillin preparations
Pharmaceuticals
Pills, pharmaceutical
Pituitary gland pharmaceutical preparations
Poultry and animal remedies
Powders, pharmaceutical
Procaine pharmaceutical preparations
Proprietary drug products
Remedies, human and animal
Sirups, pharmaceutical
Sodium chloride solution for injection U.S.P.
Sodium salicylate tablets
Solutions, pharmaceutical
Spirits, pharmaceutical
Suppositories
Tablets, pharmaceutical
Thyroid preparations
Tinctures, pharmaceutical
Tranquilizers and mental drug preparations
Vermifuges
Veterinary pharmaceutical preparations
Vitamin preparations
Water decontamination or purification tablets
Water, sterile: for injections
Zinc ointment

Technical Approach to the Development of Effluent Limitation Guidelines

The effluent limitations and standards of performance recommended in this document for the Pharmaceutical industry were developed in the manner outlined in the section "Methods Used for Develoopment of Effluent Limitations and Standards of Performance" above.

Scope of Coverage for Data Base

Figure IIIA-1 illustrates the geographical breakdown of the Pharmaceutical industry in the continental United States. Most pharmaceutical manufacturing firms are located in New York, New Jersey, Pennsylvania, Indiana, Illinois, Michigan, Missouri, Ohio, and California, with production concentrated in the industrial areas of the East and the Midwest. In addition, there are approximately 60 pharmaceutical plants on the island of Puerto Rico. All but one of the plant surveyed for this study were located in one of these three high-production geographical areas.

The Pharmaceutical Manufacturers Association (PMA) estimates that there are between 600 and 700 firms in the United States producing prescription products. PMA represents 110 manufacturers who annually produce approximately 95 percent of the prescription products sold in the United States, and an estimated 50 percent of total free-world output. Industry-wide market share data compiled by PMA show that 20 firms account for 75 percent of total sales in the United States. Five of the nine firms (16 plants) surveyed for this study are among these top 20. The remaining 4 firms were smaller companies.

It should be noted that 81 establishments primarily engaged in production of commodities listed under codes SIC 2831, 2833 and 2834 have applied for NPDES discharge applications. Of these 81, twenty-three plants are designated as major dischargers. Eight of these twenty-three facilities were surveyed during the course of this study.

SHIPMENTS OF PHARMACEUTICAL PREPARATIONS BY CENSUS REGIONS, DIVISIONS AND STATES, 1967

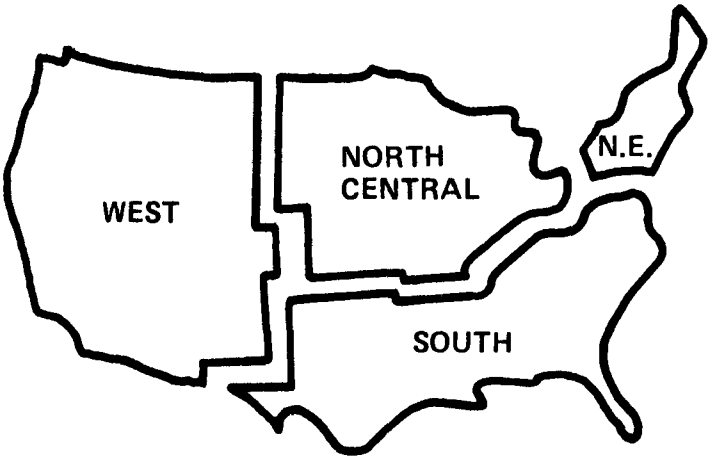

REGION	SHIPMENTS OF PHARMACEUTICAL PREPARATIONS, EXCEPT BIOLOGICALS (MILLIONS OF DOLLARS)	PERCENT OF U.S.
NORTHEAST	$2,457.7	59.3%
NEW YORK	789.3	
NEW JERSEY	887.6	
PENNSYLVANIA	709.0	
OTHER	71.8	
NORTH CENTRAL	1,287.3	31.1
OHIO	94.1	
INDIANA	425.6	
ILLINOIS	303.5	
MICHIGAN	300.9	
MISSOURI	99.6	
OTHER	63.6	
SOUTH	292.2	7.1
SOUTH ATLANTIC	177.9	
EAST SOUTH CENTRAL	87.5	
WEST SOUTH CENTRAL	26.8	
WEST	104.2	2.5
CALIFORNIA	97.9	
OTHER	06.3	
U.S. TOTAL	$4,143.0	100.0%

*PRESECRPTION DRUG INDUSTRY FACT BOOK, PMA, 1973

B. Gum and Wood Chemicals Industry

Scope of the Study

The Gum and Wood Chemicals industry was defined by EPA for the purpose of this study to include only those 47 commodities listed under SIC (Standard Industrial Classification) 2861, as shown in Table IIIB-1. The SIC code provides a valuable guideline for dividing United States manufacturing facilities into manageable categories. It should be noted, however, that the list contains some anomalies with regard to manufacturing activities in the Gum and Wood Chemicals industry, including the following:

1. The list contains some 20 natural tanning materials and dye stuffs which are of minor importance in U.S. manufacturing activities in terms of production quantities or dollar value added by the manufacture. The majority of these materials, particularly the extracts, are imported to the U.S. for distribution, and therefore represent little or no manufacturing activity.

2. Many of the products listed represent old technology, particularly hardwood distillation. The products associated with the recovery and processing of pyroligneous acid have been displaced from the market, and thus from manufacturing activity, by cheaper synthetic substitute products. Compounds which are contained in pyroligneous acid include acetate of lime, acetone, calcium acetate, ethyl acetate, methyl acetone, and methyl alcohol. Also, the technology for manufacturing pit charcoal, while still employed in some parts of the world, is no longer employed in the United States.

3. Crude tall oil, except skimmings, is a product of the Kraft (sulfate) wood fiber pulping process. The manufacture of this material is an integral part of the sulfate process and therefore the associated wastewater production, if any, would be intricately contained in Kraft manufacturing's raw waste load (RWL). In actual practice, crude tall oil is usually shipped to fractionaction plants which produce tall oil rosin, turpentine and pitch. It is this fractionation step which is included in this study.

4. Rosins, produced by the distillation of pine gum or pine wood, have been listed in Table IIIB-1. These rosins have historically been used with varying success as a principal ingredient of numerous products, such as printing inks, linoleum, varnishes, electrical insulation, foundry core oils, leather, adhesives, masonry, and solder fluxes. However, since 1949, gum rosin

Table IIIB-1

Chemicals Listed Under SIC 2861

Acetate of lime, natural
Acetone, natural
Annato extract
Brazilwood extract
Brewers' pitch, product of softwood distillation
Calcium acetate, product of hardwood distillation
Charcoal, except activated
Chestnut extract
Dragon's blood
Dyeing materials, natural
Dyestuffs, natural
Ethyl acetate, natural
Extracts, dyeing and tanning: natural
Fustic wood extract
Gambier extract
Gum naval stores, processing but not gathering or warehousing
Hardwood distillates
Hemlock extract
Logwood extract
Mangrove extract
Methanol, natural (wood alcohol)
Methyl acetone
Methyl alcohol, natural (wood alcohol)
Myrobalans extract
Naval stores, gum: processing but not gathering or warehousing
Naval stores, wood
Oak extract
Oil, pine: produced by distillation of pine gum or pine wood
Oils, wood: product of hardwood distillation
Pine oil, produced by distillation of pine gum or pine wood
Pit charcoal
Pitch, wood
Pyroligneous acid
Quebracho extract
Quercitron extract
Rosin, produced by distillation of pine gum or pine wood
Softwood distillates
Sumac extract
Tall oil, except skimmings
Tanning extracts and materials, natural
Tar and tar oils, products of wood distillation
Turpentine, produced by distillation of pine gum or pine wood
Valonia extract
Wattle extract
Wood alcohol, natural
Wood creosote
Wood distillates

production has decreased and wood rosins markets have been limited by the competition of tall oil rosin. In addition, most of the rosins sold in the industry today are either thermally or chemically modified derivatives which have improved applications both in older markets and in recently developed markets such as plastic phenolic resins and derivatives and rubber manufacturing.

It must be understood that the list in Table IIIB-1 was developed by the United States Department of Commerce and is oriented toward the collection of economic data related to gross production, sales, and unit costs. The SIC list is not related to the true nature of the industry in terms of actual plant operations, production, or considerations associated with water pollution control. As such, the list does not provide a realistic or definitive set of boundaries for study of the Gum and Wood Chemicals industry.

A graphic view of the entire industry is provided in Figure IIIB-1. It should be noted that, even though the study did not concern the management of forests, timber harvesting, or the production of pulp via the Kraft pulping process, these areas of endeavor are included to provide an understanding of the interrelationships of activities within the industry as well as those which are essential to the supply of the necessary raw materials to the industry. During the course of the study, six major production areas were identified for in-depth study:

1. Char and charcoal briquet manufacturing via carbonization of hardwood and softwood scraps.

2. Gum rosin and turpentine manufacturing via steam distillation of gum from long leaf and slash pine trees.

3. Wood rosin, turpentine and pine oil manufacture via the solvent extraction and steam distillation of resinous material from old wood stumps obtained from cut over pine forests.

4. Tall oil rosins, fatty acids and pitch production via the fractionation of crude tall oil, a by-product of the Kraft pulping process.

5. Essential oils production via steam distillation of coniferous wood fines from select lumbering operations.

6. Rosin derivatives manufacture via chemical or thermal modifications of either tall oil, gum, or wood rosins.

FIGURE IIIB-1

INTERRELATIONSHIPS OF PRESENT GUM & WOOD CHEMICALS INDUSTRY

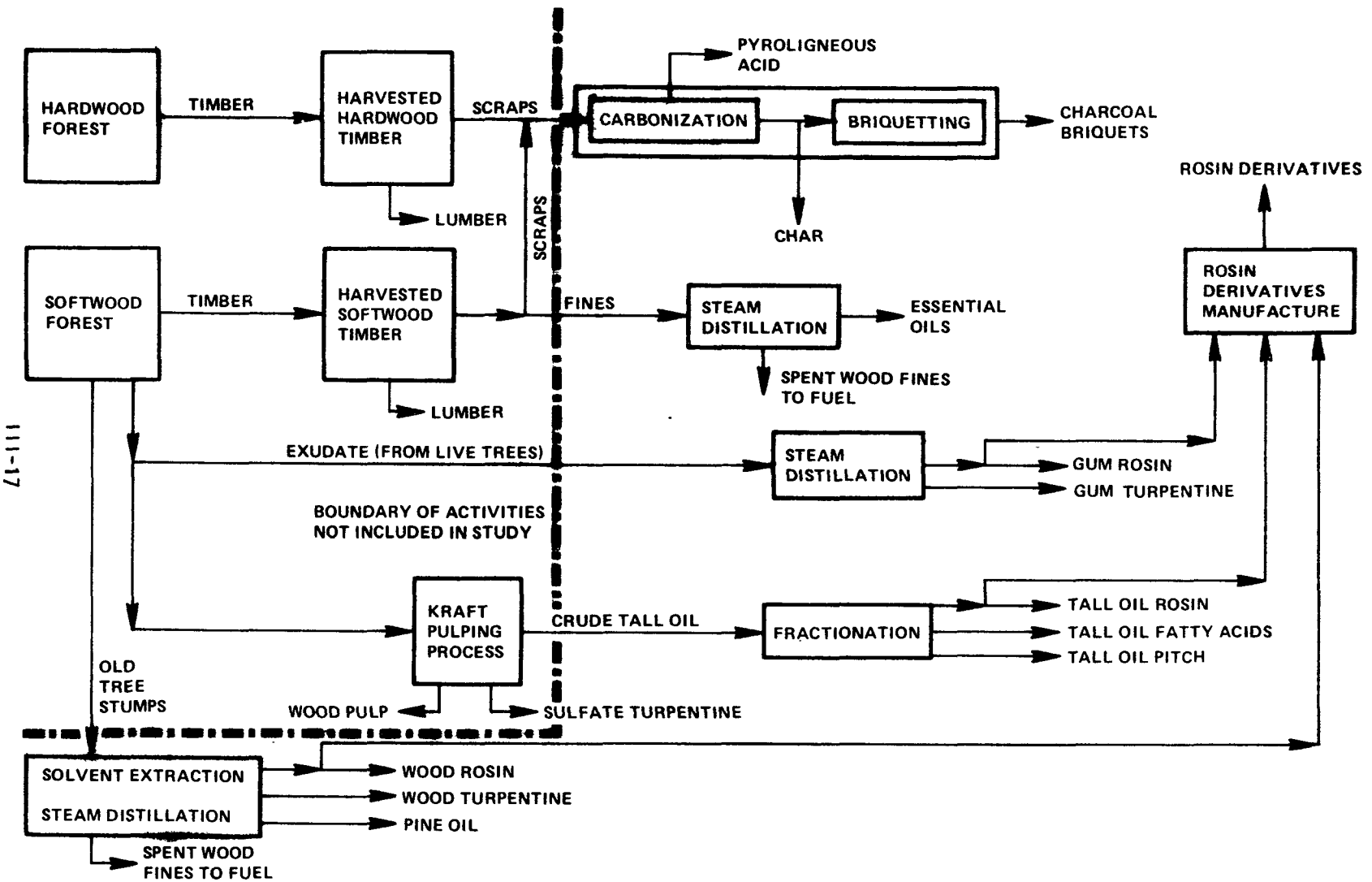

DRAFT

Technical Approach to the Development of Effluent Limitation Guidelines

The effluent limitations and standards of performance recommended in this document for Gum and Wood Chemicals industry were developed in the manner outlined in "Methods Used for Development of Effluent Limitations and Standards of Performance" at the beginning of Section III.

Scope of Coverage for Data Base

According to the 1972 Census of Manufactures, there are 135 establishments engaged in the primary manufacturing activities of SIC 2861 products. These establishments were responsible for total product value shipments totaling $226 million, or 76 percent of the total $296.3 million worth of gum and wood chemical products. The remaining products are produced in facilities primarily engaged in other manufacturing activities. Table IIIB-2 presents a breakdown of product value shipped by major manufacturing activity as established by this study. It should be noted that the reported value of the product shipped does not necessarily represent a level of manufacturing activity. For example, the $5.4 million value for natural tanning and dyeing materials and chrome tanning mixtures is more probably representative of a wholesaling operation rather than actual manufacturing.

In order to help quantify the problem, it should be noted that only 12 of the 135 establishments primarily engaged in production of commodities listed under SIC 2861 have applied for NPDES discharge applications. Five of those 12 facilities were surveyed during the course of this study.

Table IIIB-2

Production and Product Value
Gum and Wood Chemicals Industry[1]

Subcategory		Quantity (tons/year)	Value $10^6	Value Percent
A	Hardwood Char (including Briquets)[2]	531,400	79.7	26.9
A, E	Softwood Char and Essential Oils[2]	Data Not Reported	37.8	12.8
C	Solvent Extracted/Steam Distilled			
	Wood Rosin	341,150	43.6	
	Wood Turpentine	11,350	1.0	
	Pine Oil	28,950	11.7	
	Sub-total	381,450	56.3	19.0
B	Gum Naval Stores			
	Gum Turpentine	Data Not Reported	4.1	
	Gum Rosin	7,833	2.6	
	Sub-total	Data Not Reported	6.7	2.3
	Tall Oil			
	Crude Tall Oil from Kraft Process	563,800	44.2	14.9
D	Tall Oil Rosins and Resins	335,250	52.2	17.6
D	Tall Oil Products not specified	Data Not Reported	4.4	1.5
	Natural Tanning and Dyeing Materials and Chrome Tanning Mixtures	Data Not Reported	5.4	1.8
	Not Specified	Data Not Reported	9.6	3.2
	Total		296.3	100.0

[1] Derived from 1972 Census of Manufacturers.

[2] Includes pyroligneous acid, or constituents, if recovered.

C. Pesticides and Agricultural Chemicals Industry

Scope of the Study

The categories covered by this document in the Pesticides and Agricultural Chemicals industry are in Standard Industrial Classification (SIC) 2879-Pesticides and Agricultural Chemicals, and establishments engaged in manufacturing agricultural pest control chemicals covered under SIC group 281 and group 286. List of the specific products covered in this SIC are presented in Table IIIC-1.

Pesticides have usually been classified according to the target organism or species, such as insecticides, herbicides or fungicides. Table IIIC-2 presents U.S. production levels for the various sections of the industry for the period 1969-1972. Clearly, insecticides and herbicides are the most important commercially.

Individual pesticides are referred to by generic or chemical name, predominant trade name, competitive trade names, or abbreviation (e.g., DDT). This, and the fact that over 500 commercially important pesticides are manufactured, make individual references extremely difficult, and could be a source of confusion in this document. Throughout this document individual pesticide types will be referred to by their "common names". In a few instances, the generic or chemical name matches the common name. The common name is usually: (1) a hybrid of the original trade name, or (2) an abbreviation based on the chemical structure.

To better understand pesticides nomenclature, refer to the Pesticide Handbook-Entoma, Volume 1, Pages 110-134, where a list of common names, chemical names, and alternative designations are presented. This list is the basis for the pesticides referencing employed in this document.

It should be understood that specific pesticide manufacturing operations are unique, and generally characteristic only of a give facility. There are very few, if any, pesticide plants which manufacture one product or use one process. Instead, almost all plants are multi-product/process facilities, where the final mix of products shipped is unique to that plant. Some plants (such as batch chemicals complexes) produce hundreds of products, while other facilities manufacture only two or three high-volume products. In many instances, even the product mixes vary from day to day. Furthermore, the production quantities associated with the product mix shipped from a plant are not necessarily a true indication of the extent or type of manufacturing activities carried out within that plant. Frequently, products are utilized captively as feedstocks in the manufacture of other products. These factors must be considered since water usage and wastewater generation patterns in the Pesticides and Agricultural Chemicals industry are directly related to the diverse nature of its manufacturing processes and the availability of essential raw materials.

Table IIIC-1

Products Covered

Agricultural disinfectants
Agricultural pesticides
Arsenates: calcium, copper, and lead-formulated
Arsenites, formulated

Bordeaux mixture

Calcium arsenate and arsenite, formulated
Cattle dips
Copper arsenate, formulated

DDT (insecticide), formulated
Defoliants

Elements, minor or trace (agricultural chemicals)
Exterminating products, for household and industrial use

Fly sprays
Fungicides

Growth regulants, agricultural

Herbicides
Hormones, plant
Household insecticides

Insect powder, household
Insecticides, agricultural

Lead arsenate, formulated
Lime-sulfur, dry and solution
Lindane, formulated

Moth repellants

Nicotine and salts
Nicotine-bearing insecticides

Parris green (insecticide)
Pesticides, household
Phytoactin
Plant hormones
poinson: ant, rat, roach, and rodent-household
Pyrethrin-bearing preparations
Pyrethrin concentrates

Rodenticides
Rotenone-bearing preparations
Rotenone, concentrates

Sheep dips, chemical
Sodium arsenite (formulated)
Soil conditioners
Sulfur dust (insecticide)

Thiocyanates, organic (formulated)
Trace elements (agricultural chemicals)

Note: Establishments primarily engaged in manufacturing basic or technical agricultural pest control chemicals including insecticides, fungicides, and herbicides such as lead and calcium arsenates, and copper sulfate as classified in Group 281, and DDT, BHC, 2,4-D carbamates, etc., in Group 286 are also covered in this Study draft development document.

Table IIIC-2 DRAFT

U.S. Pesticides Production by Classes (1969-1972)[1]

Pesticides	1969 (1,000 lbs)	1970 (1,000 lbs)	1971 (1,000 lbs)	1972 (1,000 lbs)
Fungicides				
Copper naphthenate	1,545	1,730	1,695	2,206
Copper sulfate	42,072	28,768	31,112	28,064
Dithiocarbamic acid salts	NA	39,381	35,110	40,438
Ferbam	1,500	NA	NA	NA
Nabam	1,938	NA	NA	NA
Zineb	2,500	NA	NA	NA
Mercury fungicides	941	1,114	601	547
Pentachlorophenol (PCP)	45,988	47,170	50,877	49,704
2,4,5-Trichlorophenol and salts				
Other organic fungicides	85,607	50,307	60,875	49,610
Subtotal	182,091	168,470	180,270	170,569
Herbicides				
2,4-D acid	(47,077)	(43,576)	NA	NA
2,4-D acid, esters, and salts	56,998	NA	NA	NA
DNBP, ammonium salts	NA	NA	NA	NA
Maleic hydrazide	2,771	3,271	NA	4,472
Methanearsonic acid salts	NA	30,454	24,476	30,698
Phenyl mercuric acetate (PMA)	534	457	337	307
Silvex	1,597	2,016	NA	NA
Sodium chlorate	30,000	30,000	30,000	30,000
2,4,5-T acid	(4,999)	NA	NA	NA
2,4,5-T acid, esters, and salts	11,626	12,335	NA	NA
Other organic herbicides	268,238	312,132	404,036	416,141
Subtotal	423,840	434,241	458,849	481,618
Insecticides, Fumigants, Rodenticides				
Aldrin-toxaphene group	107,311	88,641	116,264	141,858
Calcium arsenate	1,158	1,144	940	900
DDT	123,103	59,316	NA	NA
Dibromochloropropane	8,611	NA	NA	NA
Lead arsenate	9,204	4,156	6,168	6,000
Methyl bromide	20,033	21,047	NA	24,633
Organophosphorus insecticides	NA	(132,496)	(138,185)	(160,642)
Methyl parathion	50,572	41,353	37,226	51,076
Parathion	NA	15,259	NA	NA
Other	NA	75,884	100,959	109,566
Other organic insecticides	260,892	188,632	303,261	236,442
Subtotal	580,884	495,432	564,818	570,475
Total	1,186,815	1,098,143	1,203,937	1,222,662

[1]Source: Pesticide Handbook-Entoma, Entomological Society of America, 1974.
NA Data not reported

Analysis of the manufacturing processes is a logical starting point for any study whose objective is the development of national effluent limitations guidelines. In order to develop such process-based effluent limitations guidelines, it was necessary to try to utilize some "common denominator" which would relate diverse production activities (waste generating activities) with wastewater control and treatment technologies. The process raw waste load (RWL) is considered the best tool for accomplishing this objective.

Unlike some industries where relatively large plants manufacture essentially a single product from a limited number of raw materials (e.g., cement plants), the Pesticides and Agricultural Chemicals industry involves a complex mixture of raw materials, processes, product mixes, and product formulations. To understand this industry completely, it is necessary to examine selected chemical groupings and product categorizations in some detail. Of over 500 individual pesticides of commercial importance, and perhaps as many as 8,000 distinct major formulated products, the following pesticides product divisions can be made:

1. Halogenated organic
2. Phosphorus-containing
3. Nitrogen-containing
4. Metallo-organic
5. Botanical and microbiological
6. Miscellaneous (not covered in the preceding groups)

This grouping will expedite discussion of the relationships and differences among the various chemical groups. Some examples of these differences are: the prolonged persistence of chlorinated hydrocarbons versus organophosphates in the environment; the amenability of organophosphates to chemical precipitation; the various physical properties of pesticides (for example, oily versus crystalline), which may affect the selection of control and treatment processes; and the amenability of particular chlorinated hydrocarbons to recovery (for example, by steam stripping).

The distribution of the Pesticides and Agricultural Chemicals industry among the preceding product groups or families is presented in Table IIIC-3. It can be seen that the nitrogen-containing group is the most diverse, and that the halogenated, phosphorus-containing, and metallo-organic families are approximately equal in diversity.

Table IIIC-4 lists the majority of the pesticides manufactured in the U.S. according to family and chemical structure, and their chemical configuration, which is also illustrated in the table.

The halogenated organic group of pesticides includes many first-generation organic pesticides, e.g., DDT, and has a broad spectrum of insecticidal action with prolonged stability and residual activity. This, along with competition from new products which are more economical, less toxic to higher animals, and more environmentally degradable, has caused a decline in their usage since the mid-1960's.

The phosphorus-containing insecticides are among the fastest growing products in the Pesticides and Agricultural Chemicals industry. Thousands of phosphorus-containing compounds have been evaluated for pesticidal properties, and current commercially used ones include insecticides that are marketed in multimillion-pound quantities. The number of highly toxic phosphorus-containing compounds is virtually limitless. Their suitability as insecticides, however, depends on their specific physical and chemical properties, and on how safely they can be employed. Although they are very toxic, phosphorus-containing compounds generally are easily hydrolyzed in an alkaline medium to yield materials of relatively low toxicity. Generally, these pesticides are also environmentally degradable.

Several classes of nitrogen-containing compounds have been produced and successfully marketed since 1945. These have the broadest range of biological activity and can be applied as selective herbicides, insecticides and fungicides. Herbicides and fungicides for which nitrogen-containing compounds have recently been synthesized have continued to increase their share of the pesticide market, an increase of 44.1 percent in 1966, to 57.2 percent in 1970.

Metallo-organic pesticides, which are produced by a relatively limited number of companies, include the ethylene bisdithiocarbamate class of fungicides and the sodium methanearsenate herbicides, which are the production leaders of this group. However, these products tend to break down into toxic substances, such as ethylene thiourea. New nonmetallic products, such as nonmetallic fungicides which eliminate the objectionable presence of heavy metals, are expected to take a large share of future markets.

Three of the botanical and biological insecticides, bacillus thuringienes, rotenone, and the pyrethrins, though quite effective and useful in insecticide formulations, are nontoxic to mamals, and are found widely in nature. Since these pesticides must be extracted or obtained through a fermentation process, however, large-volume production (greater than one million pounds per year) is seldom encountered.

Table IIIC-3

Pesticide Classification

	Number of Major Pesticides
A. Halogenated Organics	
DDT and relatives	9
Chlorinated Aryloxyalkanic Acids	12
Aldrin-toxaphene group	16
Halogenated aliphatic hydrocarbons	20
Halogenated aromatic-type compounds, not elsewhere classified	29
Other chlorinated compounds	12
	98
B. Phosphorus-Containing Pesticides	
Phosphates and phosphonates	19
Phosphorothioates and phosphonothioates	61
Phosphorus-nitrogen compounds	8
Other phosphorus compounds	5
	93
C. Nitrogen-Containing Pesticides	
Aryl and alkyl carbamates and related compounds	35
Thiocarbamates	23
Anilides	13
Amides and amines (without sulfur)	24
Ureas and uracils	20
Triazines	14
Amines, heterocyclic (sulfur-containing)	12
Nitro compounds	26
Other nitrogen-containing compounds	42
	209
D. Metallo-Organic Pesticides	
Mercury compounds	28
Arsenic compounds	17
Other heavy metal compounds	17
Other inorganic compounds, including cyanides, phosphides, and related compounds	24
	86
E. Botanical and Microbiological Pesticides	19
F. Organic Pesticides, not elsewhere classified	
Carbon compounds	41
Anticoagulants	4
	45
Total	550

Table IIIC-4

Structural Chemistry of Typical and Major Pesticides

A. Halogenated Organics

DDT and Relatives

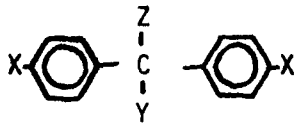

X=normally Cl Y=normally CCl_3 Z=normally H

DDT, DDD, TDE, Perthane*, Methoxychlor, Prolan, Bulan, Delan, Gex, Dicofol, Chloropropylate, Bromopropylate, Parinol, Chlorobenzilate

Chlorinated Aryloxyalkanoic Acids

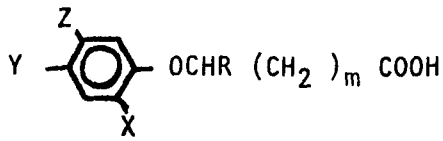

R=normally H or CH_3
X=normally Cl
Y=always Cl
Z=normally H or Cl

2,4-D and its derivatives, 2,4,5-T and its derivatives, Silvex, Dichloroprop, Sesone, Fruitone CPA*, MCPA, MCPB, MCPP, Erbon

Aldrin - Toxaphene Group

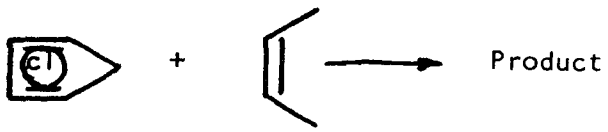

= perchlorinated ring

Kepone*, Heptachlor, Mirex, Pentac*, Chlordane, Telodrin, Aldrin, Dieldrin, Toxaphene, Endrin, Endosulfan, Isodrin, Alodan, Bromodan, Strobane

Halogenated Aliphatic Hydrocarbons

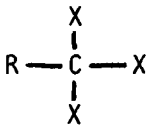

X=halogen, H, or O
R=Alkyl grouping or halogen

TCA and its salts, Dalapon and its salts, Fenac, Methyl Bromide, Carbon tetrachloride, DBCP, DD*, EDB, Lindane, Glytac*

*Trademark

Table IIIC-4
(Continued)

Halogenated Aromatic Compounds

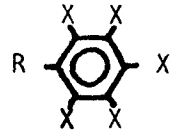

X=Cl, and NH_2,OCH_3, H, etc
R=OH, H, CL, RCOOH, ESTER,etc.

Benzene hexachloride, Dichlorobenzenes, Dacthal*, PCP and its salts, Hexachlorophene, Chloroben, Hexachlorobenzene, Dicamba, Tricamba, Chlorneb, Probe, Fenac*, Pipèralin, 2,3,6-TBA, TCBA, Tiba, Amiben, Propanil, Bandane, Strobane

B. Phosphorus-Containing

Phosphates and Phosphonates

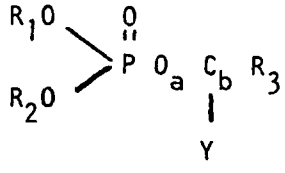

Dichlovos, Dicrotophos, Ciodrin*, Trichlorfon, Ethephon, Gardona*, Mevinphos, Naled, Nia 10637, TEPP, Phosphamidon

Phosphorothioates and Phosphonothioates

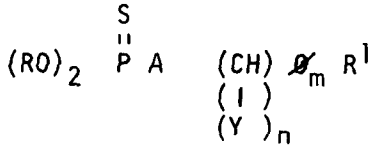

Parathion, Me-Parathion, Dicapton, Chlorthion, Fenthion, Ronnel, Sumithion, Demeton, Diazinon, Dioxathion, Guthion*, Malathion, Coumaphos, Dasanit*, Phorate, Disulfoton, Ekatin, Abate*, Acetellic*, Pyrazophos, Akton*, Aspon*, Monocrotophos, Betasan*, Def*, Dimethoate, Chlopyrifos, Dyfonate*, EPN, Ethion, Folex*, Phentriazophos, Imidan*, Menazon, Demeton-O-methylsulfoxide, Prophos, Phenthoate, Leptophos, Pirimiphosethyl, Sumithion*, Supracide*, Surecide*, Dialifor, Carbophenothion, Dichlorofenthion, Zinophos*, Phosalone

*Trademark

Table IIIC-4
(Continued)

Phosphorus-Nitrogen Compounds

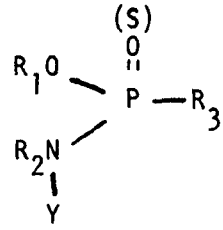

Ruelene, Nellite*, Nemacur*, Orthene*, Cyolane, Cytrolane, Go phacide*, Monitor*

C. Nitrogen - Containing

Aryl and Alkyl Carbamates and Related Compounds

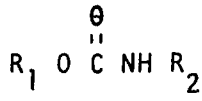

and

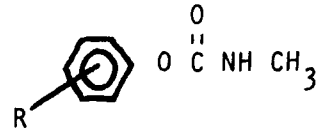

Propham (IPC), Chloropropham (CIPC), Barban, Swep, Sirmate*, Azak*, Isolan, Metacrate*, Carbaryl (Sevin*), Zectran*, Metacil*, Baygon*, Mesurol*, Temik*, Banol, Meobal*, Landrin*, Betanol*, Asulox*, BUX, Carbofuran, Lannate*, Osbac*, Pirimicarb, Tandex*, Mobam*

Thiocarbamates

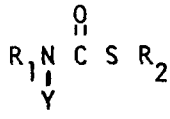

EPTC, SMDC, Vernolate, CDEC, pebulate, Diallate, Triallate, butylate, Molinate, Cycloate, Bolero*, Eptam*

Amides and Amines (without sulfur)

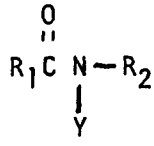

Pronamide, Alachlor, Dicryl, Solan, Propanil, Diphenamid, Propachlor, CDAA, Naptalam, Cypromid, CDA, Chlonitralid, Benomyl, Deet, Dimetilan, Diphenylamine, Hormodin*, Butachlor, Naphthalene acetamide, Vitavax*

*Trademark

Table IIIC-4
(Continued)

Ureas and Uracils

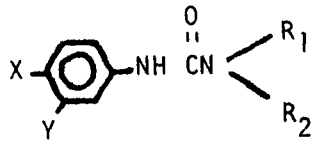

and

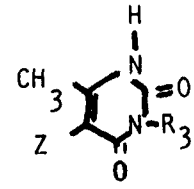

Fenuron, Monuron, Diuron, Fluometuron, Linuron, Metobromuron, Momolinuron, Neburon, Siduron, Chloroxuron, Buturon, Chlorbromuron, Norea, Cycluron, Antu*, Metrobromuron, Monuron TCA, Probe*, Urab*

s-Triazines

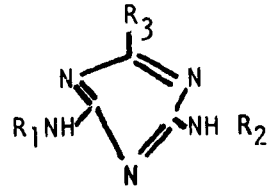

Ametryne, Atratone, Atrazine, Simazine, Simetone, Simetryne, Prometone, Prometryne, Propazine, Lambast*, Chlorazine, Bladex*, Prefox*, Sancap*, Sumitol*, Terbutryn, Dyrene*

Nitro Compounds

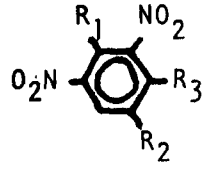

Benefin, Dinocap, Dinosep (DNSP), DNOC, Nitralin, PCNB, Trifluralin, A-820*, Dinoseb Acetate, Binapacryl, Dinitramine, Fluorodifen, Isoproplin, Lamprecid*, Nitrofen, Torpedo*, Chloropicrin, DCNA

Other Nitrogen-Containing Compounds

These have varied chemical structures

Actellic*, Pyrazophos, Ametrole, Banamite*, Benomyl, Benzomate, Calixin*, Captan, Carzol*, Chlordimeform, Cycloheximide, Cycocel*,Cyprex*, Daconil*, Dexon*, Diquat, Fenazaflor, Maleic hydrazide, MGK 264*,

*Trademark

Table IIIC-4
(Continued)

MGK Repellent 326*, Neo-Pynamin*, Paraquat, Thiram, Thiophanate, Thynon*, Milcurb*, Milstem*, Nia 21844, Nia 21861, Nia 23486, Nicotine, N-Serve*, Ohric*, Picloram, Piperalin, Plantvax*, Pyramin*, Ronstar*, Rowtate*, SADH, Sencor*, Sicarol*, Stop Scald*, Streptomycin, Tandex*, Thanite*, Difolatan*, Folpet, Mertect*, Morestan*, Nia 19873, Niacide*, Ordram*, Terrazole*, Mylone (DMTT)

D. Metallo-Organic

These have varied chemical structures, and therefore, no generalized formula can be derived.

Brestan*, Cacodylic Acid, CMA, Manzate 200*, Copoloid*, Copper-8*, Copper Oleate, DSMA, Du-Ter*, Ferbam, Maneb, MSMA, Nabam, Niacide*, Plictran*, Zineb, Ziram

E. Botanical and Microbiological

These have varied chemical structures, and, therefore, no generalized formula can be derived.

Pyrethrins, Bacillus Thuringiensis, Polyhedrus Virus

F. Miscellaneous Pesticides (not elsewhere classified)

These have varied chemical structures, and, therefore, no generalized formula can be derived.

Cresote, Nicotine, Rotenone, Petroleum oils, Butoxy, Calamite*, Dexon*, MGK Repellent 874*, Omite*, Sulfoxide, TCTP, Tetradifon, Thiram

*Trademark

There are pesticides which do not readily fall into any group. Of these, the rodenticide Warfarin deserves mention. Its production has exceeded 12 million pounds per year; none of the other so called "miscellaneous" pesticides is produced in quantities greater than 1 million pounds per year.

A small group, called the sulfur pesticides, contains halogen, nitrogen, or are produced as a metal salt, and have been categorized as halogenated organic, nitrogen-containing and metallo-organics, respectively. The treatability of the wastewaters generated during the production of these sulfur-based compounds is similar to that of their non-sulfur relatives. Inorganic pesticides, for example, sodium chlorate and elemental sulfur, have been studied as part of the inorganic industry and are not covered in this document. Likewise, certain organic pesticides, namely, creosote, acrolein, and maleic hydrazide, are more appropriately covered by organic industry guideline documents. Both production and wastewater treatabilities of the botanical (pyrethrins), microbiological (bacillus thuringienes), and the anticoagulants (Warfarin) are similar to those of products discussed under the Pharmaceutical industry section of this document. Since these products represent a small fraction of the entire Pesticides and Agricultural Chemicals industry (approximately 4 percent), it is recommended that they be studied separately, based on the information and philosophy developed for the Pharmaceutical industry subcategory. The major section not covered was Miscellaneous Organic Pesticides Not Elsewhere Classified, which includes such products as anticoagulants.

In addition to the plants which manufacture active ingredients for pesticides, there are other plants which make pesticide products by formulating, blending, canning, and packaging operations. In this sector of the industry, the raw materials used are the pesticide active ingredients, which may be procured from outside suppliers or may be manufactured on-site. The processing types in this sector (called formulators and packagers) are mechanical and physical-chemical in nature, and the levels of wastewater generation and contamination are considerably lower than in the active-ingredient production facilities. Pesticide formulations and packaged products generally fall into three classifications: water-based, solvent-based, and dry products.

Technical Approach to the Development of Effluent Limitation Guidelines

The effluent limitations and standards of performance recommended in this document for the Pesticides and Agricultural Chemicals industry were developed in the manner outlined in a preceding section, "Methods Used for Development of Effluent Limitations and Standards of Performance."

Scope of Coverage for Data Base

The Pesticides and Agricultural Chemicals industry is spread geographically across the U.S. (See Figure IIIC-1) and is diverse in manufacturing plant size and operations complexity. Eleven pesticides manufacturing complexes were visited, encompassing all categories and major subcategories. This included, plants in different locations and of varying size and complexity. The plant visits included two halogenated organics, six organo-phosphorus, four organo-nitrogen, one metallo-organic, and two formulating production facilities. In all, ninety percent of the Pesticides and Agricultural Chemicals industry was covered by the plant visits.

FIGURE IIIC-1

LOCATIONS OF PESTICIDES PRODUCTION PLANTS

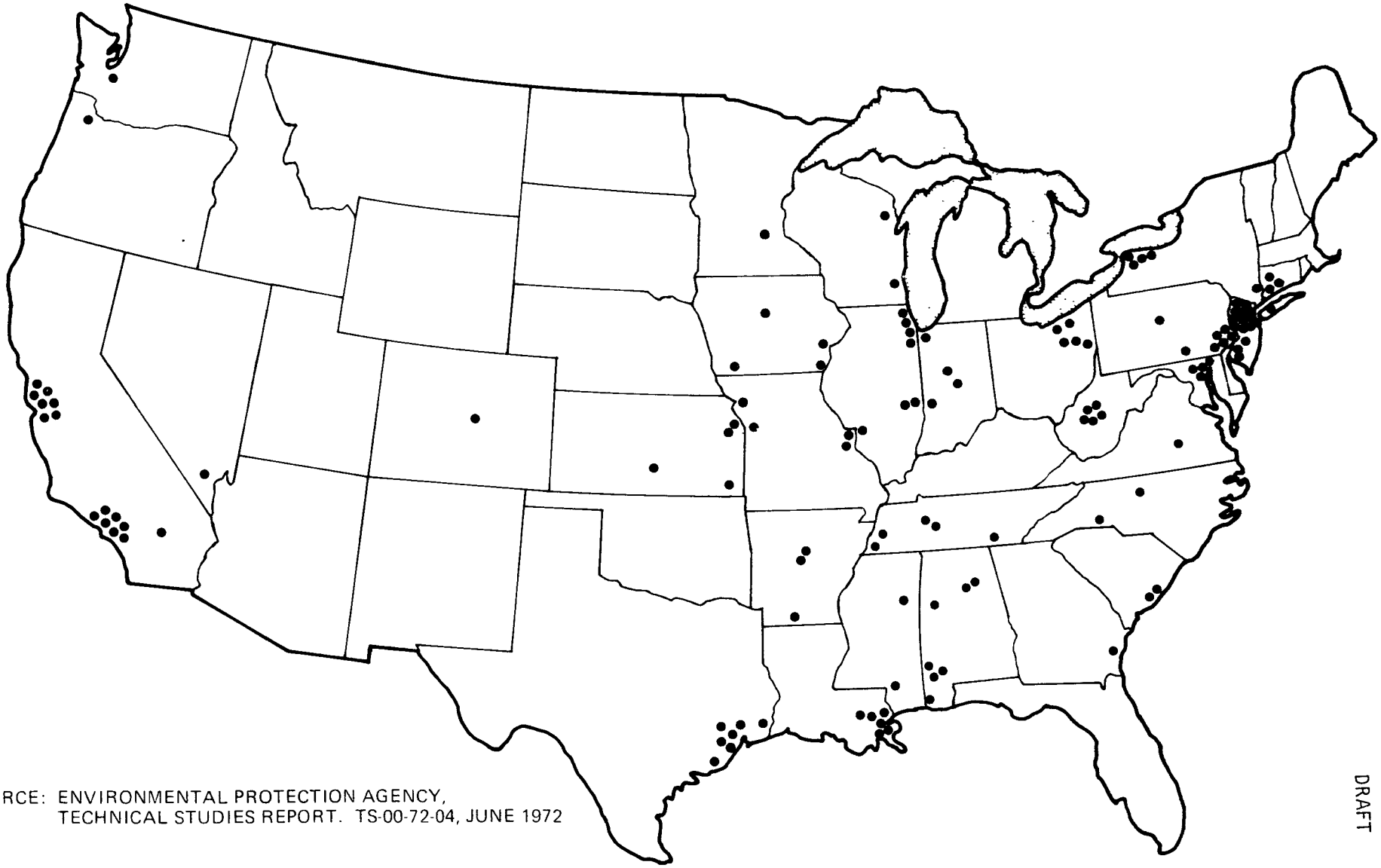

SOURCE: ENVIRONMENTAL PROTECTION AGENCY,
TECHNICAL STUDIES REPORT. TS-00-72-04, JUNE 1972

DRAFT

D. Adhesive and Sealants Industry

Scope of the Study

The Adhesive and Sealants industry was defined by EPA for the purpose of this study to include only those commodities listed under Standard Industrial Classifications 2891 and 2899, as shown in Table IIID-1. The SIC code provides a valuable guideline for dividing United States manufacturing activities into manageable categories. The volume of adhesive production in the United States in 1967 is shown in Table IIID-2.

It must be understood that the list as provided in Table IIID-2 was developed by the United States Department of Commerce and is oriented toward the collection of economic data related to gross production, sales, and unit costs. They are not related to actual plant operations, production, or considerations associated with water pollution control. As such, they do not provide a realistic or definitive set of boundaries for study of the Adhesive and Sealants industry.

The states with the highest concentration of Adhesive and Sealants industry include: Illinois, New Jersey, California, Massachusetts, and New York. Chicago has more adhesive and sealants production facilities than any other city in the United States.

Technical Approach to the Development of Effluent Limitation Guidelines

The effluent limitations and standards of performance recommended in this document were developed in the manner outlined in "Methods Used for Development of the Effluent Limitations and Standards of Performance" at the beginning of Section III.

Table IIID-1

Standard Industrial Classification of Products from the Adhesives and Sealants Industry

SIC 2891

Adhesives
Adhesives, plastic
Calking compounds
Cement (cellulose nitrate base)
Cement, linoleum
Cement, mending
Cement, rubber
Epoxy adhesives
Glue, except dental: animal, vegetable, fish, casein, and synthetic resin
Iron cement, household
Laminating Compounds
Mucilage
Paste, adhesive
Porcelain cement, household
Rubber cement
Sealing compounds for pipe threads and joints
Sealing compounds, synthetic rubber and plastic
Wax, sealing

SIC 2899

Gelatin: edible, technical, photographic, and pharmaceutical

Table IIID-2

Production and Product Value
Adhesive and Sealant Industry

Chemical Product	SIC Code	Product Sales (million $/year)	Production Volume (million pounds/year)
Animal glue	2891	25	114
Vegetable glue	2891	39	-
Casein glue	2891	8	43
Synthetic resins	2891	135	612
Rubber and synthetic resin combinations	2891	70	-
Rosin size	2891	43	365
Gelatin	2899	35	43

Source: 1967 Census of Manufactures Volume 11; Part 2; Major Groups 25-33 - Industry Statistics. U.S. Department of Commerce - Bureau of Census; Washington, D.C.

Total number of plants = 337.

DRAFT

E. Explosives Industry

The compounds covered by the Explosives industry as designated in SIC 2892 are shown in Table IIIE-1.

As stated previously in the Conclusions Section, inorganic and organic acids are not considered as a part of the Explosives industry and have been excluded from consideration in this document.

In addition, little quantitative information could be gathered for the process of demilitarization of explosives. (Demilitarization normally would occur in the Load and Pack subcategory.) This is a process by which the military scours obsolete or defective munitions with steam hoses to remove explosives and propellants from their containers (e.g. projectiles and shell casings). The process is performed so as to save the containers for possible reuse.

The pollution load from the operation of demilitarization can be very high. It is recommended that this operation be dealt with on a plant-by-plant basis.

To help clarify the coverage of this document the following are excluded from the scope of this study.

- Metal parts and finishing
- Toxic chemical agents
- Illuminants and incondiaries
- Liquid propellants
- Nuclear explosives
- Demilitarization (as noted)

The Explosives industry can be divided into two broad areas: military and commercial. Military and commercial plants differ in both size and product. Ammonium-nitrate-based explosives, dynamite, and nitroglycerin are considered commercial explosives, while TNT, HMX, and RDX are generally considered military explosives.

The manufacture of explosives in either area can be viewed primarily as the nitration of an organic molecule. Most processes use nitric acid as the nitrate source and employ sulfuric or acetic acid as a dehydrating agent. Therefore, most wastes in the industry are low in pH.

Wastewaters in the Explosives industry are of concern because of their pollutional nature and, in certain cases, their hazardous character. For example, wastewaters from nitroglycerin manufacture are often saturated with soluble nitroglycerin, which may become a potential explosive hazard if concentrated. Other than military publications, information pertaining to the wastewaters of explosives manufacture and pollution abatement technology applicable to the Explosives industry is very limited.

Table IIIE-1

Explosives Products - SIC 2892

Amatol (explosive)
Azides (explosives)
Blasting powder and blasting caps
Carbohydrates, nitrated (explosives)
Cordeau detonant (explosive)
Cordite (explosive)
Detonating caps for safety fuses
Detonators (explosive compounds)
Dynamite
Explosive cartridges for concussion forming of metal
Explosive compounds
Explosives
Fulminate of mercury (explosive compound)
Fuse powder
Fuses, safety
Gunpowder
High explosives
Lead azide (explosive)
Mercury azide (explosive)
Nitrocellulose powder (explosive)
Nitroglycerin (explosive)
Nitromannitol (explosive)
Nitrostarch (explosive)
Pentolite (explosive)
Permissible explosives
Picric acid (explosive)
Powder: pellet, smokeless and sporting (explosive)
RDX (explosive)
Squibbs, electric
Styphnle acid
Tetryl (explosive)
TNT (trinitrotoluene)
Well shooting torpedoes (explosives)

Technical Approach to the Development of Effluent Limitation Guidelines

To prepare effluent limitation guidelines for the Explosives industry it was necessary to develop a comprehensive scope of work. Each EPA Regional office was visited, and permit information was gathered. This enabled Weston to select pertinent plants to visit and sample.

Plant visits were generally made up of two phases. The first took place in an office, where pertinent data was exchanged. The second phase consisted of a walk through the plant, viewing each process previously discussed.

Four commercial and two military explosives plants were visited. Extensive sampling was performed at each of the commercial plants, while the military plants were visited for conceptualization, visual inspection, and verification of already-existing data. The data existing for the government-owned, contractor-operated munitions plant were collected and made available by the Army Environmental Hygiene Association (AEHA).

The Army operates fifteen munitions plants, the Navy operates six plants, and the Air Force three. Only the Army is actually engaged in the manufacture of explosive. Although there are Load and Pack (LAP) operations at various Navy and Air Force installations, no meaningful data have yet been assembled. Hence, the Army is the only usable source of military effluent quality data. Consequently, it was decided that the focus of the study of the military area of the Explosives industry would be the Army Ammunition Plants (AAP). Excellent representative effluent data for the several AAP's were included in the information provided by AEHA.

Hence, visits with AEHA personnel, investigation of laboratory techniques and equipment, and rationalization of the excellent field procedures made visits to the Army facilities less important. The size of the Army installations also contributed to the decision not to sample any Army Ammunition Plants. Instead, the AEHA reports were used to their fullest extent. Nevertheless, two AAP's, considered the biggest and most representative, were visited.

When all the Explosives plant visits were completed and the laboratory analysis of the samples finished, waste load characteristics were compiled, and each process waste stream was characterized by production-based water quality parameters. Trial-and-error manipulation of waste loads produced an acceptable subcategorization of the industry. Effluent guidelines were determined for each category by summarizing the removal rates of a treatment facility serving a propellant plant.

Table IIIE-2

Major Operations at Major Ammunition Plants

Plant	Explosive Manufacture	Propellant Manufacture	Initiator Manufacture	Load and Pack.
ARMY				
Holston AAP	+			
Radford AAP	+	+		+
Joliet AAP	+		+	+
Badger AAP	+	+		
Lake City		+	+	+
Longhorn AAP				+
Newport AAP	+			
Volunteer AAP	+			
Indiana AAP		+		
Iowa AAP				+
Kansas AAP				+
Louisiana AAP				+
Lone Star AAP				+
Milan AAP				+
Twin Cities AAP			+	+
Sunflower AAP		+		+
NAVY				
NAD Indian Head	+	+		+
NAD Yorktown				+
NAD Crane	+			+
NAD McAlester				+
NAD Hawthorne				+
Navy Magna Plant	+			+
AIR FORCE				
AF Plant 78				+
COMMERCIAL				
45			+	+
46		+		
47		+		
48	+		+	+
49	+			+
50	+		+	+

F. Carbon Black Industry

Scope of the Study

The term Carbon Black identifies an important family of industrial carbons used principally as reinforcing agents in rubber and as black pigments in inks, coatings, and plastics. Carbon black, a petrochemical, is an extremely fine soot composed principally of carbon (90 - 99 percent), with some oxygen and hydrogen. Carbon blacks are differentiated from bulk commercial carbons (such as cokes and charcoals) by the fact that carbon blacks are particulate and are composed of spherical particles, quasigraphitic in structure and of colloidal dimensions. The properties of carbon black are determined primarily by the process by which it is manufactured.

All carbon blacks are produced either by partial combustion or thermal decomposition of liquid or gaseous hydrocarbons, and are classified as lamp black, channel black, furnace combustion black, and thermal black. The Standard Industrial Classification number for the Carbon Black industry is 2895. Lamp blacks are made by the burning of petroleum or coal-tar residues in open shallow pans, channel black by impingement of under-ventilated natural gas flames, and furnace combustion blacks by partial combustion of either natural gas or liquid hydrocarbons in insulated furnaces. Thermal blacks are produced by thermal decomposition (cracking) of natural gas. Acetylene black, which is classified as a thermal black, is produced by the exothermic decomposition of acetylene. Brief descriptions of these processes follow:

Lamp Black Manufacture

Lamp black is the ancestor of all carbon blacks. Until the 1870's it was the only carbon black available commercially. The manufacture of lamp black was practiced by the Chinese and Egyptians during the pre-Christian era. Purified resins, fats, and oils were burned beneath inverted porcelain or pottery cones, and the soot deposited on the cool surface was carefully brushed off from time to time.

Lamp black manufacturers still follow this basic process. The principal raw materials used today however, are petroleum and coal tar by-products, such as creosote and anthracene oils. They are burned in open, shallow pans with restricted air supply. The resulting carbon smoke is then conducted to a series of settling chambers, where the flocculated carbon deposits are periodically recovered. In a typical operation, coal-tar distillate or creosote is burned from pans four feet in diameter and six inches in depth. The smoke from each pan passes slowly through a series of settling chambers, where most of the black collects. The remainder is periodically collected by bag filters

from both settling chambers and filter systems by vacuum collectors. Since the gas velocities are very low, heat is dissipated in the chambers without a need for water-spray cooling.

In recent years, this process has undergone some changes and developments, making it more similar to the oil furnace black processes. These modified lamp blacks more closely resemble oil and gas furnace blacks than traditional lamp blacks. Lamp blacks are of large particle size, possess little reinforcing ability in rubber, and are lower in jetness and coloring power. They are of value as tinting pitments in certain paints and lacquers. In most applications, however, they have been replaced by furnace blacks.

Channel Black Manufacture

Channel black is a product of incomplete combustion of natural gas. Small flames are impinged on cool surfaces, or channels, where carbon black is deposited and then scraped off as the channel moves back and forth over a scraper. The properties of channel black are varied by changes in burner tip design, distances from tip to channel, and the amount of air made available for combustion. The process is extremely inefficient chemically. For rubber-reinforcing grades, the yield is only 5 percent; for finer particle size, higher color blacks, the yield shrinks to 1 percent. Low yields and rapidly rising gas prices have motivated the industry to develop other methods of carbon black produced in the United States was produced by the channel black process.

At present there is only a single channel black plant remaining in operation in the United States, as compared to 35 plants in 1951.

Furnace Black Manufacture

In the oil furnace black process, liquid hydrocarbons are used. Yields range from 35 to 65 percent, depending on the grade of black being produced. The most desirable feedstock for furnace black comes from near the bottom of the refinery barrel and is similar in many respects to residual fuel oil. It is low in sulfur and high in aromatics and olefins. The rising cost of natural gas has been a motivating factor in the shift to greater use of liquid feedstock and to the decline in the use of natural gas as a source of carbon. With this incentive, the oil furnace black process has become very flexible. Oil furnace blacks have nearly replaced channel blacks in most high-performance applications, notably passenger-car tire treads. Over the past thirty years, carbon black technology developments have centered on the oil furnace black process, and today nearly all carbon black plants use processes of this type.

The gas furnace black process is based on partial combustion of natural gas is refractory line furnaces. Yields of gas furnace blacks range from 10 to 30 percent and are lower for the smaller particle size grades. This process is similar to the oil furnace black process. Approximately 91.5 percent of all carbon black manufactured in the United States in 1972 was made by the furnace black process.

Thermal Black Manufacture

Unlike channel and furnace blacks, thermal blacks are produced by the "cracking" of hydrocarbons. Feedstock is generally natural gas. Thermal furnaces are built in checkerboard brickwork patterns. Two refractory-lined furnaces, or generators, are used. One generator is heated, using hydrogen as a fuel, while the other generator is being charged with natural gas. The natural gas decomposes to produce thermal black and hydrogen. The hydrogen is collected and used as a fuel for the generator being heated. Particles from the thermal black process are primarily large sizes, and yields range from 40 to 50 percent.

Approximately 7.8 percent of all carbon black produced in the United States in 1972 was made by the thermal black process.

Due to the high cost and lack of natural gas, large-particle furnace blacks (LPF) may soon replace many of the thermal black applications.

Acetylene blacks, a type of thermal black, are produced by the thermal decomposition of acetylene. They possess a high degree of structural or chaining tendency. The particle size is about 40 millimicrons. They provide a high elastic modulus and high conductivity in rubber stocks. At the present time, no acetylene black is produced in the United States. Most of the acetylene black used in this country is produced in Canada.

Production and Uses

The United States is the largest producer of carbon black in the world, producing approximately 45 percent of the total world output (3.2 out of a total 7.1 billion pounds in 1972).

Production in the United States has increased steadily since the rubber industry began using carbon black in rubber in 1912. Figure IIIF-1 illustrates the United States carbon black production by process for the period from 1952 - 1972.

The furnace process is responsible for over 90 percent of the carbon black produced in this country. At the end of 1974, there were 30 furnace black plants, four thermal black plants, and one channel black

plant in operation in the United States. At the end of 1972, the total carbon black production capacity in the U.S. was approximately 11,400,000 pounds per day. Approximately 45 percent of this total capacity was in Texas, 34 percent in Louisiana, and 22 percent in other states.

Originally, plants were established in Texas and Louisiana to be near the natural gas sources, since no cheap means of transporting this feedstock existed. As emphasis shifted from the channel process to the furnace process, it was only natural that furnace facilities would be expanded at these locations. In recent years, with the emphasis on the furnace process, specifically on liquid hydrocarbon feedstocks, the economics involved in transporting the feedstocks and the product (carbon black) have moved the optimum sites for construction of new facilities to locations between the source of the feedstocks (the oil fields) and the major users of the carbon black (mainly the rubber manufacturers, specifically the tire manufacturers).

Of the total carbon black consumed in the United States, approximately 95 percent is used by the rubber industry. Most of the remainder is used by the printing ink, paint, paper, and plastics industries. Table IIIF-1 illustrates the domestic sales of carbon black in the United States by use from 1973 through 1972.

Technical Approach to the Development of Effluent Limitation Guidelines

The effluent limitations and standards of performance recommended in this document for the Carbon Black industry were developed in the manner outlined in "Methods Used for Development of the Effluent Limitations and Standards of Performance" at the beginning of Section III.

Scope of Coverage for Data Base

Most of the Carbon Black industry is located in Louisiana and Texas. In total, there are 35 carbon black plants in operation in the U.S. There are thirty furnace black plants, four thermal black plants and one channel black plant in operation. The plants visits covered two furnace plants and one thermal plant.

FIGURE III F-1

U.S. CARBON BLACK PRODUCTION
BY PROCESS

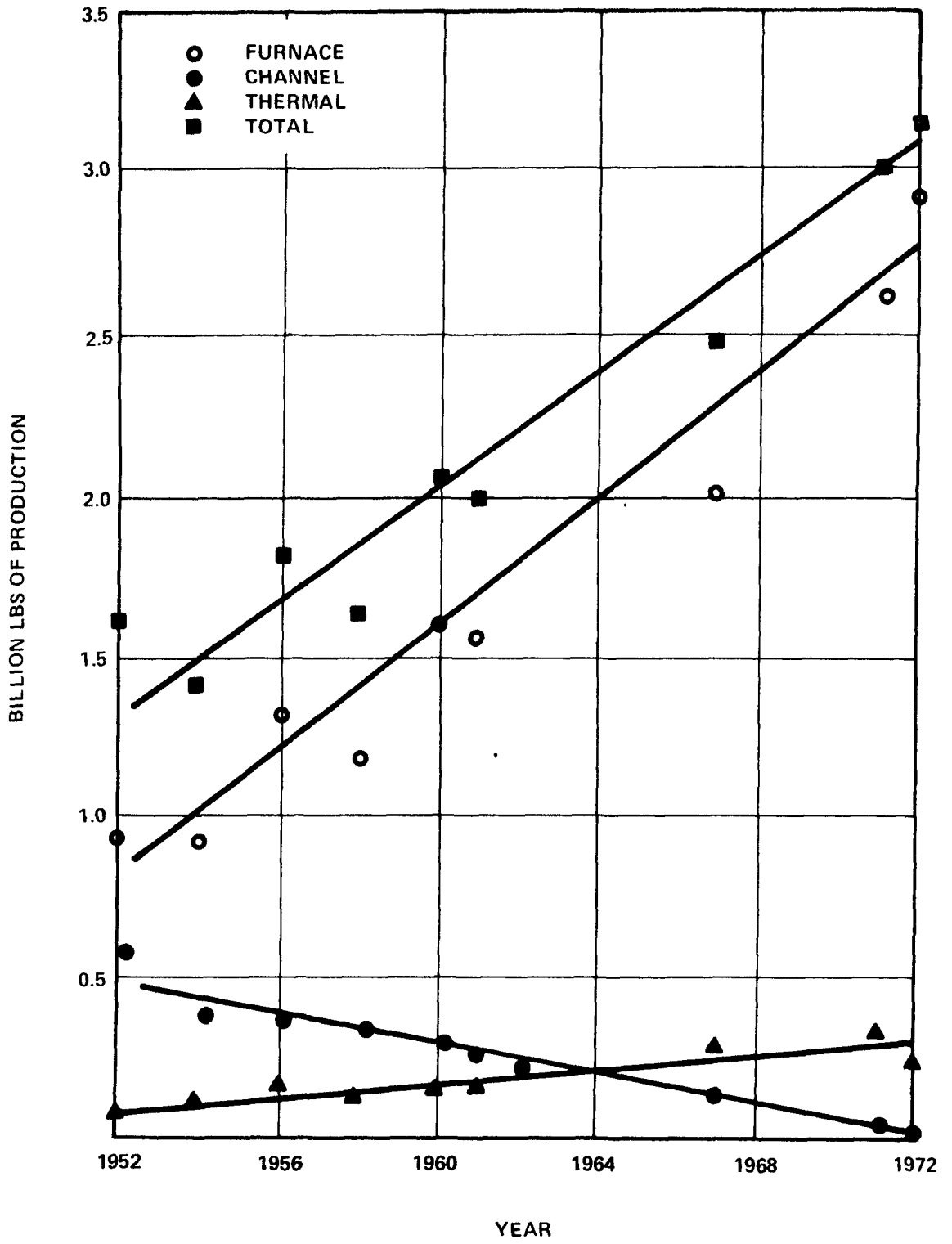

Table IIIF-1

Domestic Sales of Carbon Black in the United States - By Use

(Thousand Pounds)

Use	1963	1964	1965	1966	1967	1968	1969	1970	1971	1972
Ink	46,471	45,688	54,333	63,682	63,963	67,721	73,077	72,824	75,201	82,532
Paint	13,008	17,982	10,896	11,959	12,553	13,435	17,711	14,570	18,693	21,408
Paper	8,721	8,004	7,649	6,108	5,658	4,710	5,668	4,527	3,767	4,225
Rubber	1,629,905	1,789,432	1,945,459	2,131,169	2,072,543	2,445,550	2,616,166	2,486,146	2,678,151	2,953,779
Miscellaneous	29,315	50,388	54,163	64,677	61,428	56,986	65,327	71,454	77,715	84,764
Total	1,727,420	1,911,494	2,072,500	2,277,595	2,216,145	2,588,402	2,777,949	2,649,521	2,853,527	3,146,708

Source: The Minerals Yearbook, 1973

DRAFT

G. Photographic Processing Industry

Scope of the Study

For the purposes of this study, the Photographic Processing industry was defined by EPA to include all film processing activities listed under SIC 7221 (Photographic Studios, Portrait), SIC 7333 (Commercial Photography, Art, and Graphics), SIC 7395 (Photofinishing Laboratories), and SIC 7819 (Developing and Printing of Commercial Motion Picture Film). Lists of the specific services covered by these standard industrial classifications are presented in Table IIIG-1.

The Photographic Processing industry is made up of industrial and commercial laboratories serving both the photographic trade and the general public in film developing, photoprinting, and enlarging. Photoprocessing plants vary greatly in size and are subject to seasonal variations in production.

Technical Approach to the Development of Effluent Limitation Guidelines

The effluent limitations and standards of performance recommended in this document for the Photographic Processing industry were developed as described under the technical approach in the general section. The technical approach specific to this industry is described below:

1. Plants were selected for visits on the basis of best representation of the industry. The purpose of the plant visists were threefold. First, the individual processes of black-and-white and color film and paper within the plants were investigated for familiarization with process concepts. At this time, valuable information, otherwise unavailable, was obtained on the various processes. Secondly, the purpose was to investigate treatment technology, if any existed. Lastly, and most importantly, the purpose was to verify existing plant data on wastewater discharge with our own analytical data measured in the field.

2. The raw waste loads (RWL) were determined on the basis of data and field measurements taken on three photographic processing plants. Data supplied by the Eastman Kodak Company was also used to substantiate the field survey data (G-1). There was very strong similarity in the RWL's determined for the three plants.

Table IIIG-1

Photographic Studios, Portrait - SIC 7221

Home Photographers
Passport Photographers
Portrait Photographers
School Photographers
Transient Photographers

Table IIIG-2

Commercial Photography, Art, and Graphics - SIC 7333

Commercial Photography
Photographic Studios, Commercial

Table IIIG-3

Photofinishing Laboratories - SIC 7395

Developing and printing of film, except commercial motion picture film

Developing and processing of home movies

Film processing, except for the motion picture industry

Photograph developing and retouching

Photographic laboratories (not manufacturing)

Table IIIG-4

Services Allied to Motion Picture Production - SIC 7819

Developing and printing of commercial motion picture film

3. Effluent guidelines were developed by applying an end-of-pipe treatment model to the raw wastewater. The effluent guidelines were developed for the industry as a whole without subcategorization because the studies indicated there was no need to impose different levels of treatment within the industry. Effluent limitations have been developed for silver thiosulfate, BOD_5, and COD based on the removal rate attained by an operating biological system (G-3, 4), and for ferrocyanide based on the equivalent form of cyanide which is toxic to biological systems (G-5).

Scope of Coverage for Data Base

Although there are an estimated 12,500 photprocessing plants in the United States, only 650 of these facilities are considered major laboratories with significant wastewater discharges (G-2). In order to obtain the information required to establish realistic effluent limitations, sampling surveys were conducted at three photoprocessing plants. Since limited information is available on the treatment of photoprocessing wastes, one of the plants visited was selected because it had a pilot biological treatment plant in operation at the time of the survey. In addition to the field surveys, supplemental historical data compiled by the Eastman Kodak Company for approximately 200 photoprocessing plants was acquired and used (G-1).

H. Hospitals

Scope of the Study

In order to establish boundaries on the scope of work for this study, the Hospitals category was defined to include all establishments listed under Standard Industrial Classification (SIC) Group Number 806. This group includes all establishments primarily engaged in providing diagnostic services, extensive medical treatment including surgical services, and other hospital services, as well as continuous nursing services. These establishments have an organized medical staff, inpatients, beds, and equipment and facilities to provide complete health care.

Descriptions of the specific hospital types included under Group No. 806 are:

8062 General Medical and Surgical Hospitals

Establishments primarily engaged in providing general medical and surgical services and other hospital services.

8063 Psychiatric Hospitals

Establishments primarily engaged in providing diagnostic medical services and inpatient treatment for the mentally ill, including mental hospitals and psychiatric hospitals.

8069 Specialty Hospitals, Except Psychiatric

Establishments primarily engaged in providing diagnostic services, treatment, and other hospital services for patients with specified types of illnesses (except mental), including:

Children's Hospitals	Hospitals, Specialty (except Psychiatric)
Chronic Disease Hospitals	Maternity Hospitals
Eye, Ear, Nose, and throat hospitals	Orthepedic Hospitals
Geriatric Hospitals	Tuberculosis Hospitals

Technical Approach to the Development of Effluent Limitation Guidelines

The effluent limitations and standards of performance recommended in this document for the hospital category were developed in the manner outlined "Methods Used for Development of the Effluent Limitations and Standards of Performance" at the beginning of Section III.

Scope of Coverage for Data Base

There are over 7,000 hospitals located throughout the United States. During this study, data from hospitals in Pennsylvania, New York, New Jersey, West Virginia, California, Maine, Wyoming, and Georgia were collected and analyzed. A total of 12 hospital facilities were studied during the project, three of which were surveyed by field sampling teams. Data for the remaining nine hospitals were obtained from the Veteran's Administration. The types of hospitals studied included general medical and surgical, psychiatric, tuberculosis, cancer, orthopedic, and research facilities.

SECTION IV

INDUSTRIAL CATEGORIZATION

The goal of this study is the development of effluent limitation guidelines for the Miscellaneous Chemicals Industry that will be commensurate with different levels of in-process waste reduction and end of pipe pollution control technology. These effluent limitations guidelines are to specify the quantity of pollutants which will ultimately be discharged from a specific manufacturing facility and will be related to a common yardstick for the industry, such as quantity of production. Recognizing that the industries grouped under the Miscellaneous Chemicals category are quite diverse in raw materials used, in manufacturing processes and products, and in nature of wastewater generated, each major industry is treated independently as a category as follows:

Category	Industry	SIC Codes
A	Pharmaceutical	SIC 2831 Biological Products SIC 2833 Medicinal Chemicals and Botanical Products SIC 2834 Pharmaceutical Preparations
B	Gum and Wood	SIC 2861 Gum and Wood Chemicals
C	Pesticides and Agricultural Chemicals	SIC 2879 Pesticides and Agricultural Chemicals
D	Adhesive & Sealants	SIC 2891 Adhesive and Sealants
E	Explosives	SIC 2892 Explosives
F	Carbon Black	SIC 2895 Carbon Black
G	Photographic Processing	SIC 7221 Photographic Studies, Portrait SIC 7333 Commerical Photography, Art and Graphics SIC 7395 Photofinishing Laboratories SIC 7819 Printing of Commercial Motion Picture Film
H	Hospitals	SIC 8062 General Medical and Surgical Hospitals SIC 8063 Psychiatric Hospitals SIC 8069 Specialty Hospitals

The diverse range of products and manufacturing processes within each industry dictates that separate effluent limitation guidelines be designated for different segments within each industrial category. To this end, a subcategorization of each individual category covered under the Miscellaneous Chemicals industry has been developed and described in the following text.

A. Pharmaceutical Industry

Discussion of the Rationale of Categorization

Industry subcategories and sub-subcategories were established for the Pharmaceutical industry to define those sectors of the industry where separate effluent limitations and standards should apply. In the final analysis, the underlying distinctions between the various subcategories have been based on the wastewater generated, its quantity, characteristics, and applicability of control and treatment. The following factors were considered in determining whether such subcategorizations are justified:

Manufacturing Process

There are six basic processing techniques in common use in the Pharmaceutical industry. These techniques, all distinctly different, are: fermentation, chemical synthesis, formulation, fractionation, natural extraction, and the growth and isolation of cultures. The first three of these techniques are by far the most widely used.

Fermentation processes are used extensively in the Pharmaceutical industry to produce antibiotics. Fermentation plants are large water users and the basic process steps used at these facilities are similar throughout the industry. The basic production steps consist of the initial fermentation step, a separation step (usually vacuum filtration or centrifugation), and finally a series of extraction and purification steps. The major wastewater from this processing technique is spent beers from the initial fermentation step.

Chemical synthesis is another major production process in the Pharmaceutical industry. Hundreds of different products are made each year using chemical synthesis techniques employed by the Pharmaceutical industry, which include alkylations, carboxylation, esterification, halogenation, sulfonation, etc. Chemical snythesis plants are also large water users.

The third major production process in the Pharmaceutical industry is formulation. Formulation plants receive bulk chemical and fermentation products as raw materials and subsequently manufacture the final dosage forms (tablets, liquids, capsules, etc.). Some of the unit operations utilized for formulating final products include drying, blending, grinding, grading, mixing, labeling, packaging, etc. Compared to the fermentation and chemical synthesis processes, formulation is a relatively small water user.

Fractionation, natural extraction, and biological culture growth and separation processing techniques are used on much smaller production

scales than the three previously discussed techniques. Fractionation techniques consist of a series of centrifugation and chemical extraction steps. Natural extraction techniques use animal and plant tissues as product raw material and also consist of various separation and chemical extraction steps. Biological cultures are another raw material of medicinal products. Cultures are grown under optimum conditions and then go through a series of seeding, isolation, incubation and drying steps. These three processing techniques are generally conducted in laboratories on a bench-top scale and therefore are very small water users.

It was concluded that there are essentially four major manufacturing process areas which could logically be used as subcategories: fermentation, chemical synthesis, formulation, and biological and natural product processing techniques.

Product

Under the Standard Industrial Classification coding system, the Pharmaceutical industry is divided into three product areas; Biological Products (SIC 2831), Medicinal Chemicals and Botanical Products (SIC 2833), and Pharmaceutical Preparations (SIC 2834). Within the Medicinal Chemicals and Botanical Products classification, there are three additional major product areas: fermentation products, chemical synthesis products, and natural extraction products. Fermentation products are primarily steroids and antibiotics. Chemical synthesis products include intermediates used to produce other chemical compounds as well as hundreds of fine chemical products. These chemicals are used to ultimately produce the gamut of medicinal products, from suppositories to anti-depressants. Biological products include vaccines, serums, and various plasma derivatives. Natural extractions include such items as animal gland derivatives, animal bile salts and derivatives, and herb tissue derivatives. Formulation products are manufactured from the end-products of the other manufacturing areas and include the merchandise which is finally marketed to the public.

It was concluded that there are basically four product areas which could be used as a basis for subcategorization: fermentation, chemical synthesis, formulation, and biological and natural extractions.

Raw Materials

The Pharmaceutical industry draws upon worldwide sources for the myriad of raw materials it needs to produce medicinal chemicals. Fermentation plants require many raw materials falling into general chemical classifications such as carbohydrates, carbonates, steep liquors, nitrogen and phosphorus compounds, antifoam agents, and various acids and bases. These chemicals are used as carbon sources, nutrient sources, for foam control, and for pH adjustment in the actual

fermentation step. Various solvents, acids, and bases are also required for subsequent extraction and purification steps. Hundreds of raw materials are required for the many batch chemical synthesis processes used by the Pharmaceutical industry. These include organic and inorganic compounds and are used in gas, liquid, and solid forms.

Plant and animal tissues are also used by the Pharmaceutical industry to produce various biological and natural extraction products. The raw materials used by pharmaceutical formulation plants are the products of the other manufacturing areas. These include bulk chemicals from fermentation and chemical synthesis plants as well as such items as biles, blood fractions, salts, and various derivatives from biological and natural extraction facilities.

It was concluded that based on raw materials used, the industry could be divided into four subcategories: fermentation, chemical synthesis, formulation, and biological and natural products.

Plant Size

From inspection of historical and plant visit data, it was determined that plant size, measured in terms of production, apparently has no significant effect on the pounds of pollutant per pound of production (RWL) generated by those plants in subcategories B, C, D or E. However, raw waste loads did vary with production levels in the fermentation industry. It was also observed that there appeared to be no relationship between plant size, measured in these terms, and the quantity of wastewater generated by plants in any of the subcategories in the pharmaceutical industry.

Plant size, measured in terms of total gross floor area, was used as the basis for computing raw waste loads for the plants in subcategory E. This proved to be a more consistent yardstick for this subcategory than production.

Plant Age

During the study, old and new plants within each subcategory were visited. Following analysis of actual survey and historical data, it was concluded that plant age is not a significant factor in determining the characteristics of a plant's wastewater. The presence and absence of separate sewer systems for sanitary and process wastewaters were observed in both old and new plants. The age of a plant was related more to the location of the plant than to the quantity or characteristics of the plant's wastewaters. The older plants were located in urban areas, whereas the newer plants were sited in rural areas. This will impact the cost of treatment facilities because of land costs and availability.

Plant Location

From inspection and wastewater sampling of plants located in three geographical areas of the country and from analysis of existing data, it was concluded that plant location does not affect the quality or quantity of the process wastewater streams. The geographical areas surveyed included the Midwest, the Northeast, and the Southeast (Puerto Rico). Geographical location did affect the management of non-process streams such as non-contact cooling water. Recirculation of cooling water was more common in the warm climate areas (where water conservation was of more concern) than in temperate geographical regions.

Housekeeping

Plant housekeeping was another factor considered when comparing the various plants visited during the study. The Pharmaceutical industry has been under a form of pollution control for a number of years. Certain control standards for cleanliness, sanitation, hygiene and process control are matters of particular importance to the industry because of its concern about product quality. As a result of these considerations, the Pharmaceutical industry has, as a matter of course, practiced unusually good manufacturing and housekeeping procedures as they apply to both processes and personnel. In addition, the Pharmaceutical industry has for years been subject to certain manufacturing and operational restrictions and inspections pertaining to the regulations of the Federal Food and Drug and Cosmetic Act. Periodically, FDA personnel will call on a pharmaceutical manufacturer for an unannounced in-plant inspection covering plant housekeeping practices. Good manufacturing practices regulations promulgated by the FDA have been in force, with modifications, since 1963. In addition, since the chemical costs to produce pharmaceutical products are high, inventories are closely watched and checked, inadvertent spills and batch discharges are closely monitored, and housekeeping practices are maintained at the optimum. Due to the strict regulations concerning cleanliness enforced by the FDA, the housekeeping practices observed at all the plants visited were exceptionally good and therefore they were not considered as a factor in determining wastewater quantities and characteristics.

Air Pollution Control Equipment

The type of air pollution equipment employed by a facility can affect the characteristics and treatability of the process wastewater streams. The use of both dry and wet pollution control equipment was observed in several areas of the Pharmaceutical industry. However, these devices do not significantly impact the treatability of process wastewaters, and therefore, air pollution control devices do not form a basis for subcategorization.

Nature of Wastes Generated

Various pharmaceutical manufacturing processes have been examined for the types of contact process water usage associated with each. Contact process water is defined as all water which comes in contact with chemicals within the process, and includes:

1. Water required or produced (in stoichiometric quantities) in the chemical reaction.

2. Water used as a solvent or as an aqueous medium for the reactions.

3. Water which enters the process with any of the reactants or which is used as a diluent (including steam).

4. Water used as an absorbent or scrubbing medium for separating certain chemicals from the reaction mixture.

5. Water introduced as steam for stripping certain chemicals from the reaction mixture.

6. Water used to wash, remove, or separate chemicals from the reaction mixture.

7. Water associated with mechanical devices such as steam-jet ejectors for drawing a vacuum on the process and vacuum pumps.

8. Water used as a quench (including ice) or direct contact coolant, such as in a barometric condenser.

9. Water used to clean or purge equipment used in batch-type operations.

The type and quantity of contact process water usage are related to the specific unit operations and chemical conversions within a process. The term "unit operations" is defined to mean specific manufacturing steps, such as fermentation, distillation, solvent extraction, crystallization, purification, chemical synthesis, absorption, etc. The term "chemical conversion" is defined to mean specific reactions, such as oxidation, halogenation, alkylation, esterification, etc.

Although the study survey teams were not allowed to sample individual unit operations, it could be seen from evaluation of all available data that the characteristics of the wastewaters generated by the different manufacturing techniques utilized by the Pharmaceutical industry varied considerably. The wastewaters from fermentation processes consisted primarily of spent fermentation beers and waste solvents. The many batch operations used in chemical synthesis operations were a cause of highly variable wastewaters containing many constitutents. The wastewater flows from the formulation industry are almost exclusively equipment wash waters.

Biological, natural extraction, and research facilities generate much less wastewater than the other manufacturing processes. Their wastewater flows are intermittent, and animal wastes are often found in the effluents from research buildings.

It was concluded that the nature of the wastewaters generated by the Pharmaceutical industry formed a basis for subcategorization.

Treatability of Wastewaters

The pollutant loading from plants within the different manufacturing areas varied widely, and therefore the treatment technologies employed by companies throughout the industry varied from highly sophisticated thermal oxidation plants to small biological package plants.

The wastewaters generated by fermentation and chemical synthesis processes contain much higher pollutant concentrations than those generated from the manufacturing of biological and natural extraction products. Formulation plants generally discharge wastewaters with moderate strengths. The lowest strength wastes sampled were those attributed to research facilities. It was concluded that based on treatability of the wastewaters, five subcategories were required: fermentation, chemical synthesis, formulation, biological and natural extracts, and research.

Summary of Considerations

It was concluded that, for the purpose of establishing effluent limitations guidelines and standards, the Pharmaceutical industry should be grouped into five subcategories. This subcategorization was based on distinct differences in manufacturing processes, raw materials, products, and wastewater characteristics and treatability. The five subcategories that have been selected for the Pharmaceutical industry are:

A. Fermentative Product Manufacturers
B. Biological and Natural Extraction Product Manufacturers
C. Chemical Synthesis Production
D. Mixing/Compounding or Formulation Production
E. Research (Microbiological, Biological, and Chemical)

Subcategory C has been further subdivided into subcategories C_1 and C_2. These additional subcategorizations were based on manufacturing processes which are discussed further under the individual subcategory descriptions.

Description of Subcategories

Subcategory A - Fermentative Product Manufacturers

Fermentation is an important production process in the Pharmaceutical industry. This is the basic method used for producing most antibiotics (penicillin, streptomycin, etc.) and many of the steroids (cortisone, etc.). The product is produced in batch fermentation tanks in the presence of a particular fungus or bacterium. The culture may be the product, or it may be filtered from the medium and marketed in cake or liquid form as animal feed supplement. The product is extracted from the culture medium through the use of solvents, activated carbon, etc. The antibody is then washed to remove residual impurities, concentrated, filtered, and packaged.

The most troublesome waste of the fermentation process, and the one most likely to be involved in water pollution problems, is spent beer. This is the fermented broth from which the valuable fraction, antibiotic or steroid, has been extracted. Spent beer contains a large amount of organic material, protein, and other nutrients. Although spent beer frequently contains high amounts of nitrogen, phosphate, and other plant growth factors, it is also likely to contain salts, like sodium chloride and sodium sulfate, from the extraction processes.

This subcategory includes the unit operations which follow the fermentation steps that are used to retrieve the product from the fermentation broth. These include physical separation steps, such as vacuum filtration and centrifugation, as well as chemical separation via solvent extraction and distillation. Fermentation requires extensive quantities of water. The primary liquid wastes include the fermentation beers; inorganic solids, such as diatomaceous earth, which are utilized as a pre-coat or an aid to the filtration process; floor and equipment washings; chemical wastes such as solvents; and barometric condenser water from evaporation.

Subcategory B - Biological and Natural Extraction Product Manufacturers

Biological Product Manufacturers produce bacterial and virus vaccines, toxoids and analogous products (such as allergenic extracts), serums, plasmas, and other blood derivatives for human or veterinary use. The primary manufacturing steps in blood fractionation include chemical precipitation, clarification, extraction, and centrifugation. The primary wastewater sources are precipitates, supernatants, centrates, waste alcohols, and tank washings. The precipitates and waste alcohols can be incinerated or reclaimed, while dilute wastes (supernatants, centrates, and tank washings) are sewered. The production procedures for vaccines are generally lengthy and involve numerous batch operations. Unit operations include incubation, centrifugation, staining, freezing, drying, etc.

Liquid wastes associated with the process consist primarily of spent media broth, waste eggs, glassware and vessel washings, animal wastes, bad batches of production seed and/or final product, and scrubber water from air pollution control equipment. Spent media broth, bad batches, waste eggs, animal carcasses, and contaminated feces are normally incinerated. Wastes from small non-infected control animals may be landfilled. Equipment washings, animal cage washings, and scrubber blowdowns are usually sewered.

Natural extractions manufacturing includes the processing (grading, grinding, and milling) of bulk botanical drugs and herbs. Establishments primarily engaged in manufacturing agar and similar products of natural origin, endocrine products, manufacturing or isolating basic vitamins, and isolating active medicinal principals such as alkaloids from botanical drugs a nd herbs are also included in this industry. The primary wastewater sources include floor washings, residues, equipment and vessel wash waters and spills. To the maximum extent possible, bad batches are corrected rather than discarded. When bad batches cannot be corrected, liquids are generally discharged to the plant sewer system. Solid wastes are usually landfilled or incinerated.

Subcategory C - Chemical Synthesis Production

The production of chemical synthesis products is very similar to fine chemicals production, and uses the following major unit processes: reaction, extraction, concentration, separation, solvent recovery, and drying. The synthesis reactions are generally batch types which are followed by extraction of the product. Extraction of the pharmaceutical product is often accomplished through solvents. The product may then be washed, concentrated and filtered to the desired purity and dried. The major wastewater sources include tank washes, equipment washes, spent cooling water, and condenser dischargers. These wastes are generally amenable to biological treatment.

Subcategory C has been divided into subcategories C_1 and C_2: Subcateory C_2 includes those plants which manufacture antibiotics by chemical synthesis, with the remaining plants falling in subcategory C . This additional subcategorization was formulated due to RWL-production[1] level relationships demonstrated in the survey results.

Subcategory D - Mixing/Compounding of Formulation Production

Formulation operations for synthesis products may be either dry or wet. Dry production involves dry mixing, tableting or capsuling, capsule manufacturing. and packaging. Process equipment is generally vacuum cleaned to remove dry solids, and then is washed down. Scrubber blowdown from air pollution control devices may also be a wastewater source,

and baghouses (for air pollution control) will generate a solid waste requiring disposal. Wet production involves mixing and blending in large vats and subsequent bottling and packaging. The primary wastewater sources include tank and equipment washings and spills.

Subcategory E - Microbiological, Biological and Chemical Research

Generally, quantities of materials being discharged by a research operation are relatively small when compared with the volumes generated by production facilities. However, the problem cannot be measured entirely by the volume of material going to the sewer. Research operations are frequently erratic as to quantity, quality, and time schedule when dumping occurs. The most common problem is the disposal of flammable solvents (especially low-boiling-point solvents like ethyl ether), which can result in explosions and fires. The most effective approach to this problem is to require laboratory personnel to dispose of all waste solvents in special containers available in the laboratories and to have the material hauled away by a contractor. The effluent limitations for this subcategory were based on total gross floor area, since this proved to be a more consistant measure than production rate. This approach is logical, because research facilities are not involved in manufacturing a specific product, unlike industries in the other categories.

Process Descriptions

Subcategory A - Fermentative Product Manufacturers

Historically, the Pharmaceutical industry has used materials of plant and animal origin as sources for drugs. The industry also goes a step further and employs the life processes of plants and animals (especially from microorganisms) to produce useful medicaments. An excellent example of this is the fermentation process, in which microorganisms are permitted to grow under controlled conditions to produce valuable and often complex chemicals. With a few exceptions, notably chloramphenicol and cycloserine (which are produced by chemical synthesis), all antibiotics are produced by fermentation. The technique involves growing the microorganism on a large scale in totally-enclosed tanks ranging in size from 5,000 to 25,000 gallons under conditions which force the microorganism to produce the maximum quantity of the antibiotic. Control of microorganism activity is achieved by the following techniques:

1. The culture is grown in a fermentation medium which contains the various ingredients required by the organism for its nutrition, e.g., a carbohydrate such as glucose, sucrose, lactose, or starch;

a simple nitrogen source, such as urea or ammonium sulfate; or a more complex nitrogen source, such as soybean meal, corn-steep liquor, whey, cottonseed meal, or a meat digest. In addition, various salts may be added to provide the organism with its nutritional requirements for one or more of the cations (manganese, magnesium, copper, iron, potassium) and for one or more of the anions (phosphate, sulfate, and chloride). Sometimes other materials such as oil or yeast extract are added. If the organism is aerobic, sterilized air is introduced through a sparger in the bottom of the vessel and dispersed throughout the fermenting broth by agitation. It should be emphasized that the fermentation medium is one which is devised to stimulate maximum antibiotic production and not necessarily meet the normal nutritional requirements of the organism.

2. The organism is grown under conditions of pure culture, i.e., in the absence of any competing microorganism. This is achieved; by sterilizing the medium and the fermentor with heat, usually steam; by aerating with sterile air, usually obtained by passage through a filter containing glass wool or carbon; and by preventing the entrance of foreign microorganisms during the fermentation period through operation of the vessel under positive pressure and the use of steam seals on all connecting lines.

3. Close control of the physical environment is achieved: by continuous mixing of the batch to ensure intimate contact of the microorganism with the components of the medium; by control of the batch temperature; and finally by control of the pH. This latter control may be achieved either by relying on the metabolism of the organism combined with the proper balance of medium ingredients to give the desired pH pattern, or by the addition of acid or bases as needed. Aerated fermentations often foam excessively, and, as a consequence, a defoamer is usually added intermittently to keep the batch under control.

   The choice of defoamer is influenced by its defoaming ability and its toxicity to the fermentation. Interference with product isolation in the refining step, is another factor to be considered.

4. In a few isolated cases, product formation is stimulated by the addition, throughout the fermentation, of a compound which the organism can incorporate into the final product. An example of this occures in the production of benzylpenicillin, when phenylacetic acid is added, to be incorporated into the benzyl side chain. Similarly, phenoxyacetic acid is used to stimulate the production of phenoxymethyl penicillin.

The antibiotic may be accumulated within the cells of the microorganism or excreted into the surrounding aqueous medium, or a combination of the two may occur. Usually, the antibiotic is recovered from the

fermentation broth by utilizing techniques basically related to solvent extraction of the filtrate and/or cells, selective ion exchange, chromatography precipitation, or a combination of these.

In a number of fermentation operations, it is possible to recover the suspended mycelia and nutrients present in the spent beer. They can then be concentrated, dried, and sold as an animal feed supplement. Of course, for these solids to be utilized in such a manner, the fermentation waste must be free of hazardous components. Landfilling is designated by some companies for such solids when reuse is not feasible.

Although many antibiotics are produced commercially, the general fermentation processes used are very similar. Flowcharts for typical fermentation processes are depicted in Figures IVA-1 and IVA-2. The major wastewater sources are the spent beer from the fermentation step and spent solvents from subsequent extraction steps.

Subcategory B - Biological and Natural Extraction Product Manufacturers

A biological product is any virus or bacterial vaccine, therapeutic serum, toxin, antitoxin, blood derivative, or analogous product applicable to the prevention, treatment, or cure of diseases or injuries in man. They are created by the action of microorganisms, and they are used for prophylaxis, treatment, and diagnosis of infections and allergic diseases. Biological products are valuable for producing immunity to infections and preventing epidemics caused by contagious diseases. The two major production processes in this group are blood fractionation and vaccine production.

Numerous refinements of the detailed procedures for blood fractionation have been made to increase the yield and purity of the various components. The principal methods presently in use for large scale separations are called Method 6, Method 5 H, and Method 9. Method 6 and Method 5 H are used for the main separation of the plasma, whereas Method 9 is for the subfractionation of precipitate II + III.

Table IVA-1 lists the various plasma fractions produced and indicated their respective components and ultimate uses.

Method 6 is used for the industrial production of plasma. The plasma for which this method was developed is obtained from bleedings in which one unit (500 me) of whole blood is collected in a vessel containing 50 me of 4 percent sodium citrate. After separating the cells from the plasma, the plasma is gently stirred, cooled, and brought to a pH of 7.2.

FIGURE IVA-1

TYPICAL FERMENTATION PROCESS

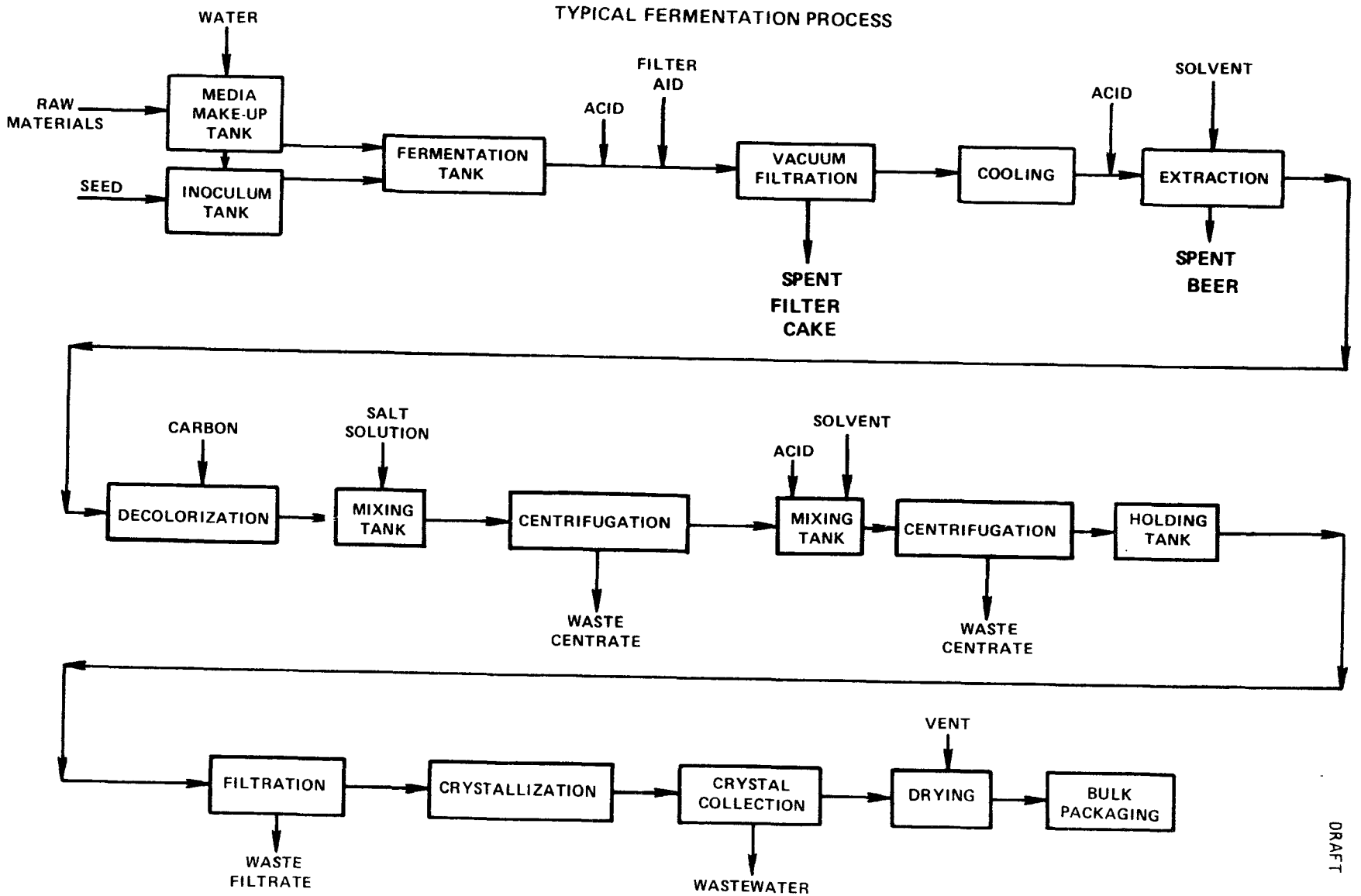

DRAFT

FIGURE IVA-2

TYPICAL FERMENTATION PROCESS

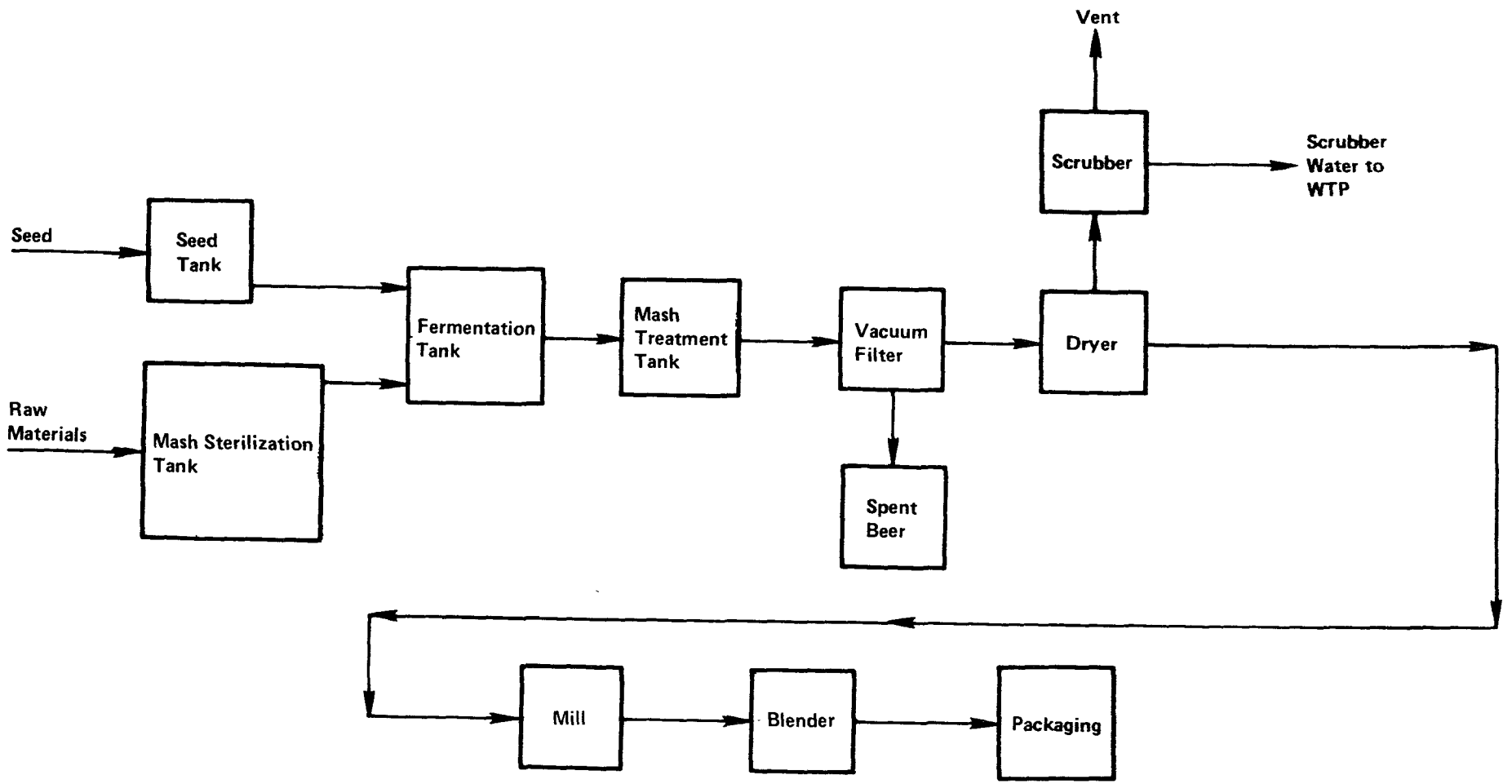

Table IVA-1

Flowsheet of Protein Fractionation of Plasma

Fraction of Plasma		Components	Demonstrated Users
I		antihemophilic globulin	treatment of hemophilia
II + III	III-0	cholesterol: Phosphatides carotenoids; Vitamin A estrogens	
II + III-W	II	globulins and some B globulins	immune globulins against measles and infectious hepatitis; other anti-bodies
III	III-1	isoagglutinins	blood grouping
III-2-3	III-2	prothrombin (thrombin)	blood coagulation; hemo
III-3		(fibrinogen, which yields fibrin foam and film) plasminogen	in neurosurgery blood coagulation
IV-1		a-globulin; cholesterol: phosphatides; phosphatases	
IV-4		a- and b globulin; esterases hypertensinogen; some albumin	
VI		protein not precipitated	

The plasma then undergoes a series of centrifugation steps. The resultant supernatant and/or precipitate is chemically treated in preparation for the next centrifugation, is preserved and stored for future use, or is discarded.

Several manufacturers now use a simplified version of Method 6. in this simpler system, the number of fractions is reduced, and the total volume of the system is smaller. This modified procedure has been designated as Method 5 H.

The precipitate designated II + III, which is produced in the third step of Method 6 and in Method 5 H, is the starting material for Method 9. This method is used to produce additional blood fractions and, as in Methods 6 and 5 H, consists of a series of centrifugation steps to separate the desired plasma fractions.

In general, the production process for vaccines is lengthy and involves numerous batch operations. Figure IVA-3 schematically outlines a typical vacine production process. The primary unit operations include mincing, trypsinizing, centrifugation, incubation, freezing, and drying. Liquid wastes associated with the process consist primarily of spent media broth, waste eggs, glassware and vessel washings, and bad batches of production seed and/or final product.

Production of material extractions involves the processing of bulk botanical drugs and herbs. Typical unit operations used to manufacture products in this group include milling, grading, grinding, and solvent extraction. These manufacturing operations are usually carried out on a small scale, and the quantity of wastewater generated is small. Most extraction processes practice solvent recovery and recycle, and therefore the degree of contamination remaining in the washwater depends on the extent and efficiency of the recovery operations. The used plant tissues are generally incinerated with any waste solvents or are landfilled, and therefore these wastes seldom enter the wastewater stream.

Subcategory C - Chemical Snythesis Production

The Pharmaceutical industry employs a greater variety of complicated steps in its manufacturing processes than almost any other chemical process industry. The complex chemical structure of many medicaments probably has a relationship to the even greater complexity of the ailments of the human and animal bodies which the products of the Pharmaceutical industry are designed to ameliorate. Also, except for the Nuclear industry in certain cases, as a rule the Pharmaceutical industry places greater emphasis upon the purity of its products than does any other industry.

FIGURE IVA-3

TYPICAL VACCINE PRODUCTION PROCESS

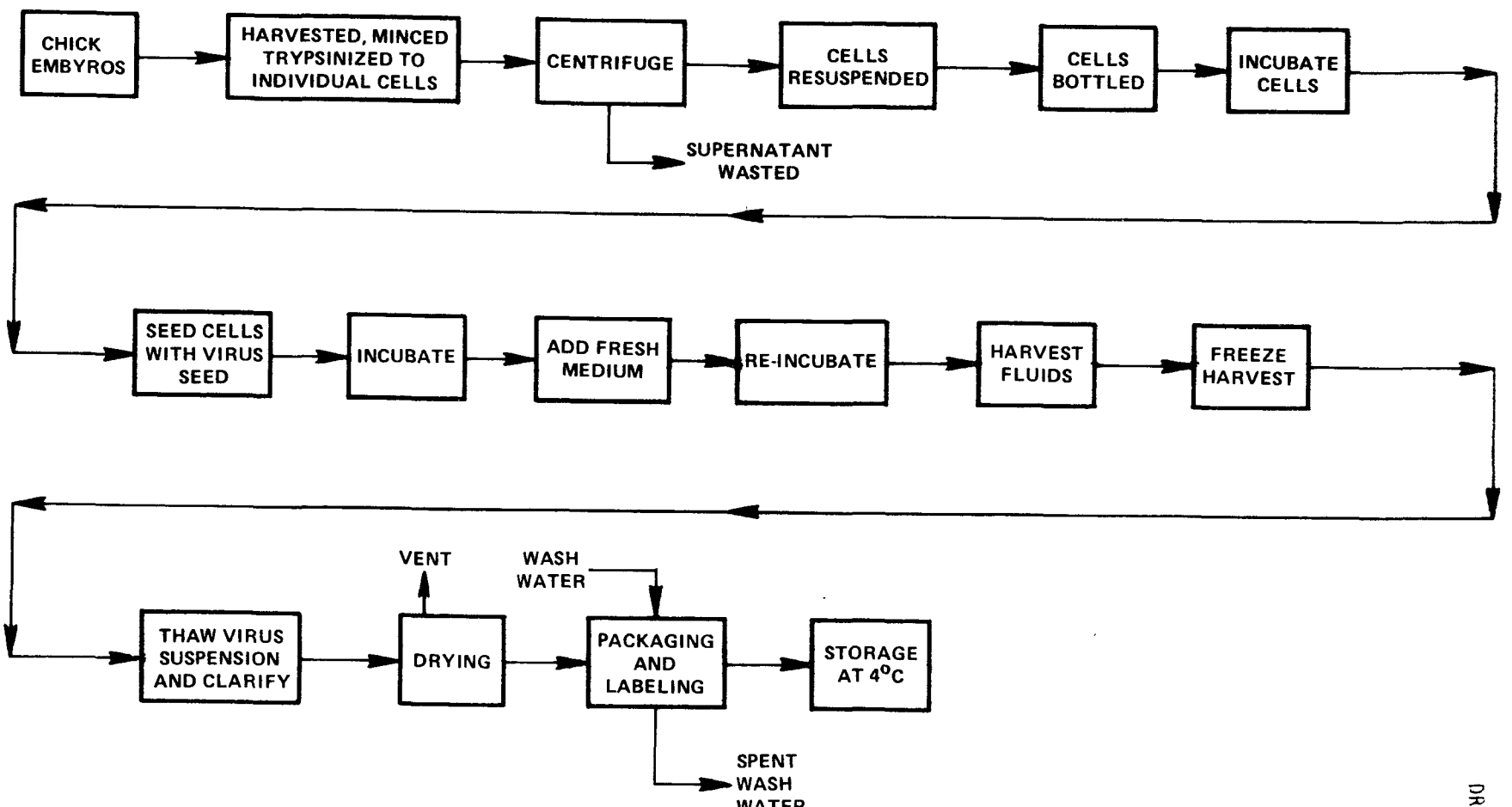

DRAFT

At first glance, a chemical plant often appears to be a chaotic maze of equipment, piping, and buildings that is totally unlike any other facility, even those which manufacture the same product. Nevertheless, there are certain basic components common to almost all chemical plants: a process area; storage and handling facilities for raw materials, intermediates, and finished products; electrical, steam, air, and water systems with associated sewers and effluent treatment facilities; and, in most cases, a laboratory, an office, control rooms, and service roads.

The storage facilities associated with any chemical plant obviously depend upon the physical state (i.e. solid, liquid, or gas) of the feedstocks and products. Storage equipment frequently utilized includes: cone-roof tanks, with or without "floating" roofs, for storage of liquid hydrocarbons; cylindrical or spherical gas-holding tanks; underground and above ground storage tanks; and concrete pads or silos for storage of solids.

Wastewater emanating from storage facilities normally results from storm run-off, tank washing, accidental spills, and aqueous bottoms periodically drawn from storage tanks. Although the generation rate is sporadic and the volume small, these wastewaters have in most cases contacted the chemicals which are present in this area. For this reason, they are normally sent to a process sewer and given the same effluent treatment as contact-process wastewaters.

Utility functions, such as steam supply, deionized water, ice water supply, hot water supply, and cooling water, are generally set up to service several processes. Boiler feed water is prepared and steam is generated in a single boiler house. Noncontact steam used for surface heating is circulated through a closed loop, making varying quantities available for the specific requirements of the different processes. The condensate is almost always recycled to the boiler house, where a certain portion is discharged as blowdown.

The three major uses of steam generated within a chemical plant are:

1. For noncontact process heating. In this application, the steam is normally generated at pressures of 125 to 650 psig, or low-pressure steam at pressures of 5 to 50 psig, for heat-sensitive products.

2. For power generation, such as in steam-driven turbines, compressors, and pumps associated with the process. In this application, the steam is normally generated at pressures of 650 to 1500 psig and requires superheating.

3. For use as a diluent, a stripping medium, or a source of vacuum through the use of steam jet ejectors. This steam actually contacts the hydrocarbons in the manufacturing processes and is

a source of contact process wastewater when condensed. It is used at a substantially lower pressure than the foregoing and frequently is exhaust steam from one of the other uses.

Water conditioning or pretreatment systems are normally part of the utilities department of most plants. From the previous discussions, it should be obvious that the required treatment may be quite extensive. Ion-exchange demineralization systems are very widely employed, not only for conditioning water for high-pressure boilers, but also for conditioning various process waters. Clarification preceding an ion exchange operation may be employed. In some cases, a demineralization system is dedicated to a single processing step with a high demand for continued water and, therefore, is operated as part of that production unit.

Noncontact cooling water also is normally supplied to several processes from the utilities area. The system is either a loop which utilizes one or more evaporative cooling towers, or a once-through system with direct discharge.

A closed system is normally used when converting from once-through river cooling of plant processes. In the closed system, a cooling tower is used for cooling all of the hot water from the processes. Figure IVA-4 illustrates this method. With the closed system, makeup water from the river is required to replace evaporation loss (at the tower), drift, and blowdown. Drift is droplet carry-over in the air (as opposed to evaporative loss). The cooling tower industry has a standarized guarantee that drift loss will not exceed 0.2 percent of the water circulated. Blowdown to a sewer or river is necessary to avoid a build up of dissolved solids. Although blowdown is usually taken off the hot water line, it may be removed from the cold water side to comply with regulations that limit the temperature of cooling water discharged. Blowdown from a tower system will vary, depending on the dissolved solids concentration in the make-up water and the cycles of concentration maintained in the system. Generally, blowdown will be about 0.3 percent per 10°F of cooling, in order to maintain a dissolved solids concentration in the recirculated water of three to four times that of the make-up water.

The quantity and quality of the blowdown from boilers and cooling towers depend on the design of the particular plant utility system. The heat content of these streams is purely a function of the heat recovery equipment associated with the utility system. The amounts of waste brine and sludge produced by ion exchange and water treatment systems depend on both the plant water use function and the intake water source. None of these utility waste streams can be related directly to specific process units.

Quantitative limitations on parameters such as dissolved solids, hardness, alkalinity, and temperature, therefore, cannot be allocated on

FIGURE IVA-4

CLOSED COOLING WATER SYSTEM

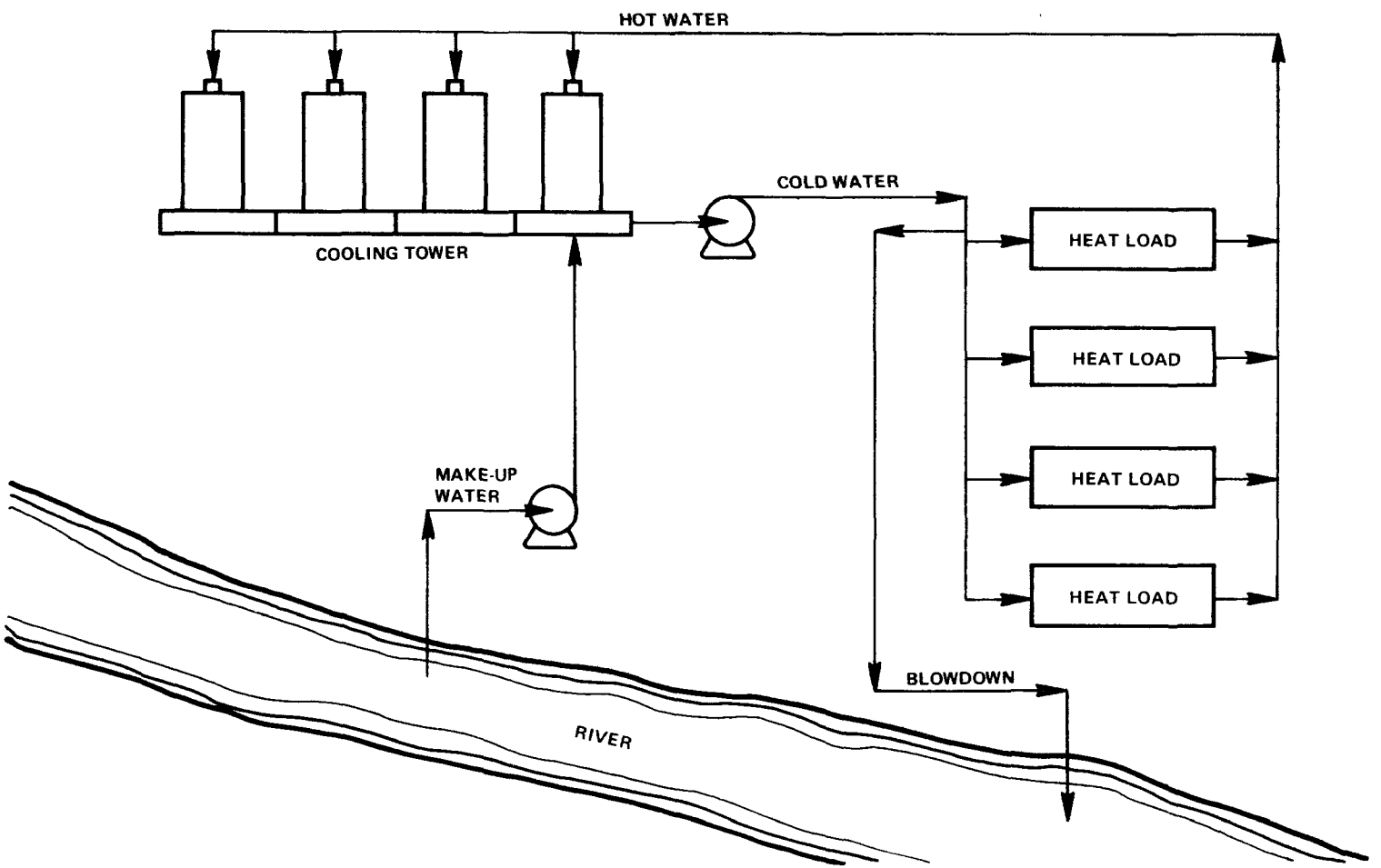

DRAFT

a production basis. The limitations on parameters like these, which are associated with noncontact utility effluents, will be established in the effluent guidelines for the Steam Supply and Noncontact Cooling Water industry.

The service area of the plant contains the buildings, shops, and laboratories in which most of the plant personnel work. The sanitary wastes from this area obviously depend on the number of persons employed. It should be noted that most bulk chemical synthesis plants run continuously and have 3 operating shifts per day. There are also wastes associated with the operation of the laboratory, machine shops, laundry, etc. Depending on the size of the plant, there may be tank car and/or tank truck cleaning facilities which could add to the process wastewater load. The wastes from the service area normally are combined with the wastes from the process area prior to treatment.

Each chemical synthesis process is itself a series of unit operations which causes chemical and/or physical changes in the feedstock or products. Flow sheets illustrating typical chemical synthesis of processes are shown in Figures IVA-5 and IVA-6. In the commercial synthesis of a single product from a single feedstock, there generally are unit operations associated with the preparation of the feedstock, the chemical reaction, the separation of reaction products, and the final purification of the desired product. Each unit operation may have drastically different water usages associated with it. The type and quantity of contact wastewater are therefore directly related to the nature of the various processes. This in turn implies that the types and quantities of wastewater generated by each plant's total production mix are variable.

The production from a given process is obviously related to the design capacities of the individual unit operations within it. In many cases the unit operations are arranged as a single train in series. In other cases, certain unit operations are arranged in parallel, as in an operation utilizing several small reactors simultaneously.

There are two major types of manufacturing process within the industry:

1. Continuous Processing Operations.
2. Batch Processing Operations.

Manufacturing processes can be classified in this manner by the flow of material between unit operations within a process, which may be either a continuous stream or a series of batch transfers. Both types of processes normally have an associated design capacity which is expressed in terms of thousands of pounds of product per year.

In large-scale continuous processes, all of the subsections of the process module are operated with the use of automated controls; in some cases, complete automation or computer control is utilized. Recording instruments maintain continuous records of process variables

FIGURE IVA-5

TYPICAL CHEMICAL SYNTHESIS PROCESS

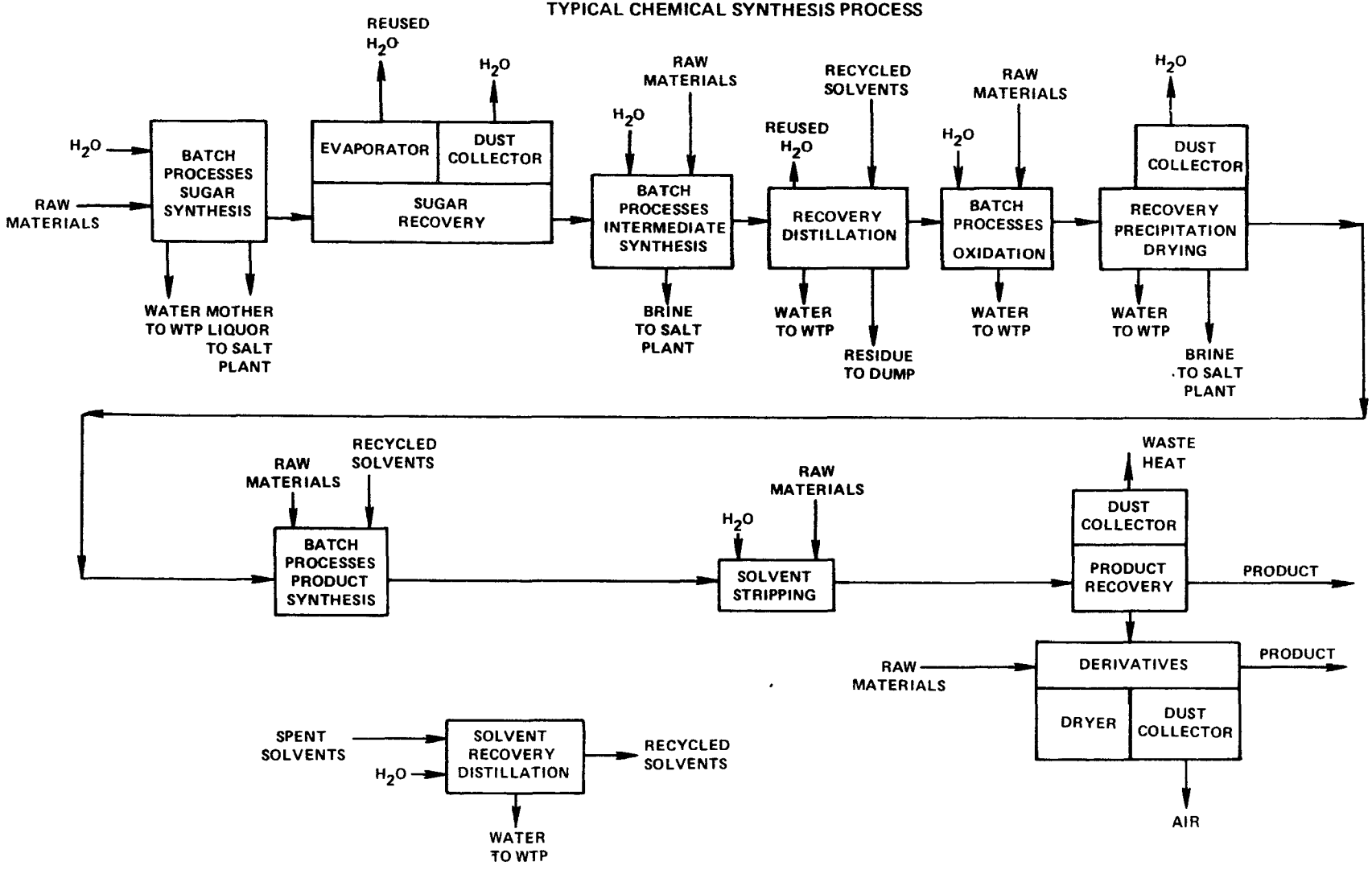

FIGURE IVA 6

TYPICAL CHEMICAL SYNTHESIS PROCESS

(ANTIBIOTIC MANUFACTURE)

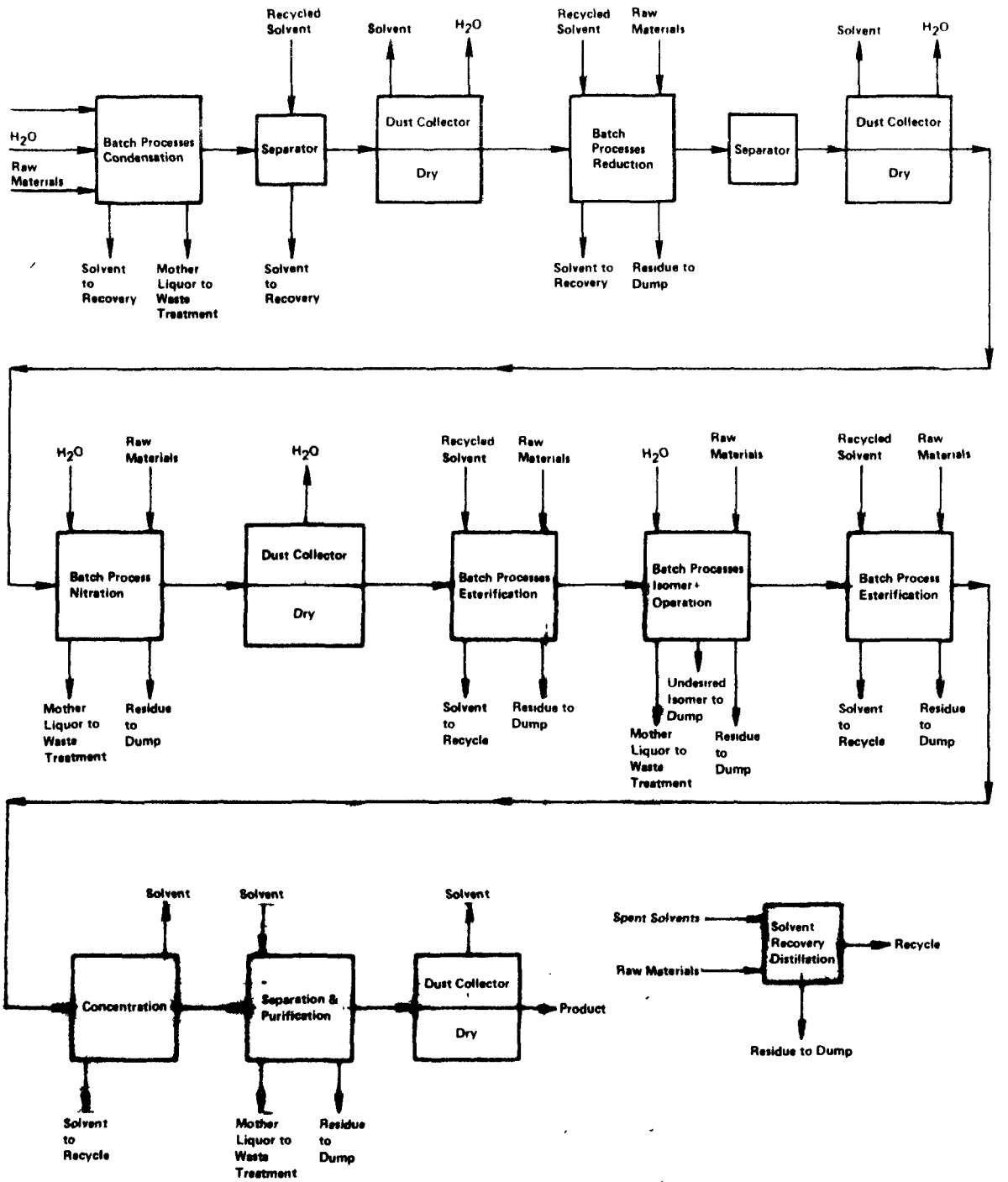

such as temperature, pressure, flow of fluids, viscosity, pH, liquid level, and the composition of various process streams. Instrumentation for the indicating, recording, and control of process variables is an outstanding characteristic of modern chemical manufacture. The function of the operators, mechanical technicians, and supervising engineers in this type of operation is to maintain the process module in proper running order and to keep process parameters within desirable ranges. In large continuous operations, equipment is frequently segregated to the extent that each process module is located in its own building or plant location. In such operations, there is usually complete segregation of contact process waters from noncontract cooling waters.

In the manufacturing of fine chemicals, batch processes are frequently used for reasons of quality control, economic considerations, low product demands, FDA requirements, or specific manufacturing requirements. Batch operations are more easily controlled when varying reaction rates and rapid temperature changes are key considerations. This requires more supervision on the part of operators and engineers, since conditions and procedures usually change from the start to the finish. Batch operations with small production and variakle products may also use the same equipment to make several different chemicals by the same type of chemical conversion. Hundreds of specific products may be manufactured within the same building. This type of processing requires the cleanout of reactors and other equipment after each batch. Purity specifications may also require extensive purging of the associated piping. Rapid changes in temperature during the batch sequence may also require the direct addition of ice or quench water instead of slower non-contact cooling through a jacket or coils.

Contact process waters from batch and continuous processes include not only water produced or required by the chemical reactions but also any water which comes in contact with chemicals within each of the process modules. Although the flows associated with these sources are generally smaller than those from non-contact sources, the organic pollution load carried by these streams may be greater by many orders of magnitude.

In general, the chemical processing area of a plant is made up of a number of batch reactors followed by intermediate product storage and purification steps, such as crystallization, distillation, filtration, centrifugation, solvent extraction, and other unit operations either singularly or in combination. Since some equipment may be common to several product needs, careful equipment cleaning is necessary to avoid cross-contamination.

The washings follow the drainage system, and can thus be collected for subsequent treatment. Where a solvent is necessary in the cleaning steps for a vessel cleanout, the vessel is closed and cleaned by recirculation of the solvent through a pump system. The contaminated solvent is then discharged to a hold tank for purification by stripping and subsequent recovery drawoff. The tars or sludges are usually

incinerated or hauled to a landfill. In some very small production facilities, the solvent may be disposed of to an approved disposal firm.

Where solvents are used for cleaning, plant safety becomes a primary concern. It is extremely important to minimize the discharge of water-insoluble solvents to plant drains, where a simple spark could create a major castastrophe. Plant safety is of constant concern, and fire hazards are to be avoided as much as possible. Consequently, plant safety measures help eliminate gross discharges of such organics, although low concentrations remain in dissolved, dispersed, or emulsified form and require subsequent treatment.

There are several possible major pollution sources in chemical synthesis production. If the reaction is carried out in a batch kettle or autoclave, then the washout solutions will be high in contaminant loadings. If distillation is done under vacuum, the process vacuum jet water will be saturated with the lighter components of the reaction mix. If filtration is involved, two possibilities exist. If the filter cake is unwanted, then there is a solid waste disposal problem. If the filtrate is the unwanted material, this portion usually goes to the process sewer, where it is either treated separately or combined with the main effluent for subsequent treatment. Since chemical reactions frequently involve acids or bases, an effluent needing pH adjustment may result, especially if one reactant is used in excess of stoichiometric proportions. Reactor effluent will sometimes contain emulsions from which the oil may be separable by pH adjustment.

Where solvents are used, both for process and vessel cleaning, most plants practice solvent recovery. A few plants also strip weak organic solutions to reduce contaminant loadings further. The stripping operation is carried to the point where the organic solution can safely be combined with other process wastes.

A number of the plants have evaporation and incineration units to aid in their disposal of specific organic wastes which might be difficult to treat biologically.

Subcategory D - Mixing/Compounding or Formulation Production

Pharmaceutical formulation represents all the various operations that are involved in producing a packaged product suitable for administering as a finished, usable drug. It would include such things as mixing of ingredients, drying of granules, tableting, capsulating, coating of pills and tablets, preparation of sterile products, and finally the packaging of the finished product. Figure IVA-7 illustrates three typical pharmaceutical formulation processes.

FIGURE IVA-7

TYPICAL PHARMACEUTICAL FORMULATION PROCESSES

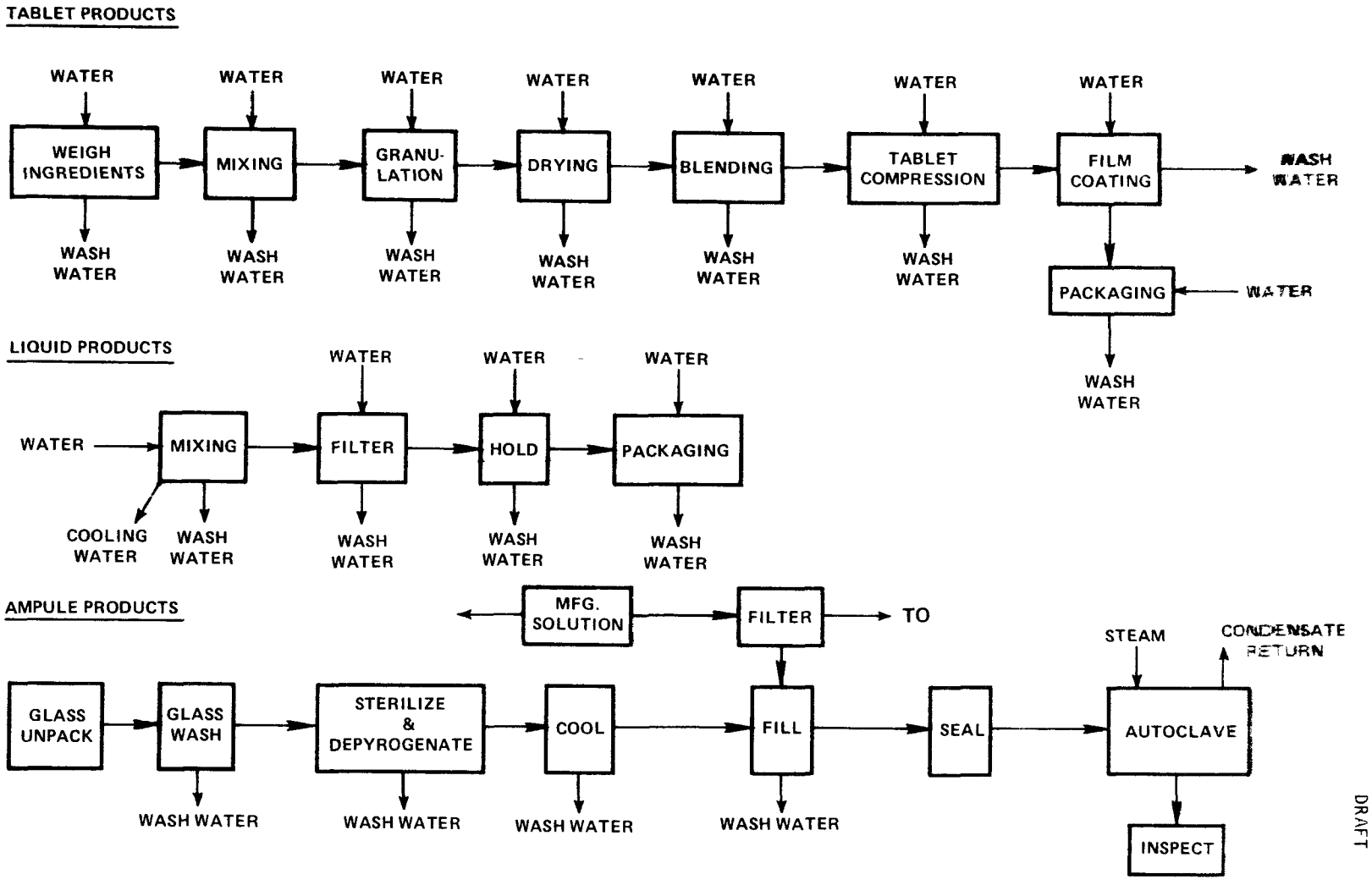

DRAFT

In general, the specific unit operations of the formulation process cannot be considered serious water polluters, for the simple reason that they do not use water in any way that would cause pollution. It should also be pointed out that most pharmaceutical formulation plants work on an eight-hour day, five-day per week work schedule, and the usage of water is limited primarily to that period. As a result of both the shorter work schedule and the lower water requirements per unit operation that characterize the plants in this subcategory, the amount of wastewater generated per pound of product is considerably lower for the plants in subcategory D than for the plants in the other categories. This can be seen from the survey results presented in Table VA-1. In spite of this, however, there are a number of places where water pollution can be expected. Washup operations are always a potential pollution source. The application of too much water over too great an area can flush materials (into a sewer) that are unusual in terms of both quantity and concentration. Dust and fume scrubbers used in connection with building ventilation systems or, more directly, on dust and fume generating equipment, can be a source of water pollution, depending on the nature of the material being removed from the airstream.

Most pharmaceutical manufacturing firms are compounders, special processors, formulators, and product specialists. Their primary objective is to convert a desired prescription into tablets, pills, lozenges, powders, capsules, extracts, emulsions, solutions, syrups, parenterals, suspensions, tinctures, ointments, aerosols, suppositories, and other miscellaneous consumable forms. These operations can be classified as labor intensive and low in waste production.

Manufacturing descriptions for the different forms of pharmaceutical dosages are discussed in the subsequent paragraphs.

Tablets are formed by compaction of powders, crystals, or granulations. The various modifications which are possible can be seen in the following list:

Form of Tablet	Drug Release Characteristics
Plain compressed	Rapid or sustained
Coated	Rapid, delayed, sustained, and repeat action
Molded	Rapid

The process of plain compression tableting can be divided into the following three basic approaches: wet granulation, direct compression, and slugging.

For drugs which are not prone to degradation in the presence of moisture, the wet-granulation step has heretofore been the most widely used. The process consists of carefully blending the powdered ingredients (except for the lubricants and disintegrants) and then wetting the powder with a solution or dispersion of the binders. The damp mass is screened to form coarse granules and dried. The classic method of drying has been to spread the mass on trays and dry the granules in a hot-air oven. Recent advances in technology have produced a fluidized-bed drying technique in which the damp mass is placed into a cylindrical container with a screened bottom. Heated air is forced through the mass, causing the mass to be suspended in air and dried rapidly. This new method has reduced drying time to about one-fifth of that required by conventional methods. The fluidized-bed driers have also been modified so that the granulating fluid can be introduced into the air stream and can therefore granulate the powders and dry them in one operation. The dry granules are rescreened to about 20 to 40-mesh granules and then mixed with the lubricants and disintegrants. The granulation at this point is ready to be compressed into tablets.

The second technique for the preparation of tablets is direct compression. Much work has been carried out on this process in recent years because of the obvious advantage of reduced labor time. The process consists simply of blending the ingredients and compressing it into tablets.

The "slugging" technique is used only as a last resort in the case of drugs which cannot be wet-granulated because of instability and cannot be compressed directly. Slugging, as the title suggests, is the compaction of a powder blend into large tablets. They may be 1 or 2 inches in diameter and may weigh up to 30 grams. The large tablets are collected and ground up and converted into granules and then recompressed into final tablet form.

The method for compressing granules into tablets, regardless of the method of manufacture, is basically identical. The granulation is fed into a die cavity. The fill is volumetric and consequently the weight must be controlled by changing the height of the lower punch, which regulates the volume available for filling. Since volume is directly measured, the necessity of having a free-flowing and uniform granulation becomes apparent. Once the cavity is filled, the upper punch compresses the powder mass into a tablet. After the tablet is ejected by the lower punch, the cycle is repeated.

Compressing equipment varies from small single-punch machines which have one upper and lower punch and a die, to large rotary tablet processes having up to fifty-five sets of punches and dies. The rate of production can vary from 100 tablets per minute on the single-punch machines to 4,500 tablets per minute on the larger presses.

In addition to conventional tablets, methodology has been developed to compress so-called layer tablets. In this method, two different granulations are fed into the machine. First, a portion of one granulation is compressed into a rather soft tablet, and then a measured quantity of the second granulation is layered upon the partially compressed tablet. The mass is then fully compressed, resulting in a layer tablet. This approach may be used for two reasons: 1) separation of incompatible ingredients, and 2) preparation of sustained-action tablets where one layer provides the immediate-release dose and the second the slow sustaining drug dose.

Tablets prepared as above can be coated to improve taste, stability, and appearance or to control the rate and site of drug release. The coating of tablets can be accomplished by three basic methods: pan coating, air-suspension coating, and compression coating.

Pan coating is the classical technique in which cores, free from dust and broken tablets, are tumbled in pear-shaped pans. While the tablets are in motion, they are wet down with a concentrated syrup containing a film-forming agent such as gelatin, acacia, or methylcellulose. When all surfaces have been wet, a dusting or engrossing powder such as flour or powdered sugar is added and tumbled under a flow of warm air. This is usually repeated two or three times to coat the tablet rapidly and to round off the edges. After these coats, the tablets are usually dried overnight to prevent moisture from penetrating the core. This portion of the process is generally called subcoating. The process is continued by repeated applications of the heavy syrup without dusting powder to smooth out the tablet surface. Color coats are applied if desired, and then the tablet is polished with carnauba wax in a canvas- or wax-lined pan. Pan coating is the standard method of tablet coating, and as a rule the finished coated-tablet weight is double that of the uncoated core.

As in the case of the compression of tablets, recent advances in the technology have greatly modified coating procedures. The process of film coating has achieved great popularity. In this method, tablets are given a thin coat of a polymeric material, either by repeated application by hand or automated by means of a programmed system. Air-suspension coating, known as the Wurster process, is suited for film coating. The cores are placed in a cylindrical chamber and "fluidized" (suspended in a stream of air). The coating solution is atomized into the air stream. Because of rapid evaporation of the solvent, the coating material is continuously deposited upon the tablet. The time required for coating in this method is about one-tenth that for conventional method.

The coatings discussed so far have all had one common factor, i.e., the coating materials were either suspended or dissolved in a solvent. Another method of coating is compression (or dry) coating. In this

process, a core tablet is prepared and then an outer coating is compressed around the inner tablet. This results in what might be called a tablet within a tablet.

Molded tablets are prepared by molding a damp mass into the general shape of tablets.

Most individuals refer to tablets of any type as "pills". Actually, pills are a definite and distinct class of dosage form and were the forerunner of today's tablet. Pills combine a drug and an "excipient" which, when damp, gives the mass a doughlike consistency. The mass is divided into dose units and then rolled into balls and allowed to dry.

Although pills can be produced mechanically, the inherent problems of accuracy as compared to tablet production have caused a dramatic decrease in their use. The basic process is to mix the drug with the excipient and then dampen this with some agent such as acacia syrup, glycerol, sugar syrup, or synthetic gums. The plastic mass is rolled into long pipes of uniform diameter and then cut into pieces equivalent to one dose of the drug. The divided portions pass between two belts and are rolled into spherical pills, dusted with a powder to prevent sticking together and finally dried. The finished pills may be coated in the same manner as tablets.

Next to tablets, capsules rank second as the most widely used solid oral dosage form. They have an advantage over tablets in that they do not require the addition of binders and disintegrants. Capsules fall into two basic categories, hard and soft. Hard gelatin capsules are prepared in two sections, one of which slips over the other. They are prepared empty and filled with powder when needed. The soft gelatin capsule is made with gelatin and glycerol, and retains its plasticity even when dry. The soft capsules are not prepared in advance but as part of the manufacturing process.

The manufacture of hard-gelatin capsules is a rather precise technique, since the seal of the capsule depends upon the tight fit of the top over the body of the capsule. The process consists of dipping steel pins into a solution of gelatin maintained at a precise temperature. When the pins are removed from the bath, a film of gelatin adheres to the pins. The temperature is critical, since the viscosity of the gelatin is affected by temperature, and this determines the thickness of the film adhering to the pins and consequently the wall thickness of the finished capsule.

When the capsule has been dried, trimmed to proper length, and removed from the pin, the upper and lower portions are joined. The sizes of the capsules vary greatly from those holding approximately 30 mg to those holding several grams for veterinary use. The colors of the capsules can be controlled by added dyes or pigments.

Capsules are filled by various pieces of equipment. All machines separate the upper and lower portions of the capsules, filling the powder into the lower half, and then rejoining the capsule components. Since the fill is volumetric, the ratio of drug to diluent must be adjusted to obtain the correct dose of drug for a specific capsule size. After the capsules are filled they are usually cleaned with air and tumbled with sodium chloride to remove any dust which may cling to the capsule. They may subsequently be imprinted with a name or trademark for identification.

Although the majority of soft-gelatin capsules contain nonaqueous solutions or soft masses containing the drug, powders can be filled into this type of dosage form. In soft-gelatin capsule manufacture, two continuous films of gelatin are passed between two rotary die plates which contain cavities, each corresponding to one-half of the capsule. As they come together, the mass or liquid is injected into the partially-sealed capsule. Upon further rotation, the edges are pressure-sealed and the capsule is cut out of the ribbon. If the capsules are to be filled with powders, one ribbon is passed under a hopper containing the powder, which is fed into a cavity created when the gelatin is molded into the die by vacuum. After filling, the second ribbon seals the capsules in a manner analogous to that for the liquid capsules.

Although aerosols have been used for over twenty years for dispensing insecticides and insect repellents, the usefulness of this medium for the dispensing of drugs has been recognized widely only since the 1950's.

Aerosols are usually manufactured by the cold-filling method. The propellants are usually fluorinated hydrocarbons of varying compositions having different vapor-pressure and boiling-point characteristics. Generally, the solution or suspension of the propellants and the drug is chilled to reduce the vapor pressure, and the solution is filled volumetrically into suitable containers. The valves are then firmly attached and sealed to the container. Care must be exercised in this operation to exclude moisture, since the propellants are hydrolyzed by moisture to yield corrosive products. Generally, the operations are carried out in dehumidified areas. The finished containers are usually placed in water, and defective units are detected by the appearance of bubbles.

An alternative method of manufacture is to seal the valve to the empty container and then force the solution through the valve under pressure. This method is useful for the preparation of small quantities.

Liquids may be simple solutions, syrups, elixirs, or suspensions. These preparations are usually manufactured in jacketed glass-lined or stainless-steel vessels similar to chemical reactors. The solutions are filtered under pressure through plate filters and then pumped into suitable storage tanks prior to filling. At this stage the bulk product is usually sampled for analysis and control of physical specifications.

The manufacturing processes for suspensions and emulsions are similar to that for solutions, except that after dispersion by simple mixing the system is passed through a homogenizer or colloid mill. These units may force the dispersion through a small orifice under high pressure or pass the dispersion between two plates, one stationary and the other rotating at high speed. The aperture between the plates is adjustable to vary the shearing action of the mill. Advances in ultrasonics have made it possible to utilize this form of energy in production for dispersion of substances. This method has proved useful for both suspensions and emulsions.

The manufacturing of ointments involves melting a base material and then blending in the drug. The mass is allowed to cool and is then passed through roller mills, high-speed coloid mills, or mills of the rotor and stator type. In the last case, adequate cooling of the mill is important, since too much heat buildup will cause the ointment to melt, resulting in a nonhomogeneous product.

Creams are manufactured in a similar manner, except that the products consist of two phases, and therefore each phase must be heated separately and the drug incorporated into one of them. The two phases are mixed with rapid stirring and are stirred continuously until cool.

The manufacturing process for suppositories consist of melting a loose material, dispersing the drug, and pouring the mixture into pre-chilled molds. This can be carried out by manual or automatic methods. Suppositories can also be made by compression of a powdered base in which the drug has been dispersed. The latter method is not used in full production unless specifically required by the nature of the drug.

Subcategory E - Research (Microbiological, Biological, Chemical)

A new drug normally takes five to six years to reach the market, resulting in an average cost of five million dollars. On the average, 5,000 chemical compounds are investigated before one is found that is therapeutically useful. Research in the Pharmaceutical industry is a real team effort. The industry employs pure and applied scientists of almost all disciplines from mathematicians and physicists to pharmacologists, pharmacists, chemists, and medical practitioners. Because of the high cost of a new drug and the general importance to the public health, companies are mainly interested in cures for the more common ailments. Nevertheless, many remedies for rare diseases and diagnostic agents have come from the laboratories of the Pharmaceutical industry. The three areas of research discussed in the following paragraphs are chemical, microbiological, and biological. The range of wastes generated from these various research areas range from exotic chemicals to animal wastes.

The organic chemist synthesizes or isolates from natural sources chemical entities of potential therapeutic use. The great majority of the synthetic work is directed by intuition, knowledge of other compounds of natural or synthetic origin, and ideally by cooperation with biochemists and pharmacologists. The resulting compounds may be screened for a great variety of activities. It is possible that a compound synthesized for one therapeutic activity actually finds its way to the market as a cure for some totally unrelated ailment.

The biochemists can be divided into two major groups, those engaged in investigations of absorption, excretion, and metabolism of the drugs in the various tissues and organs, and those involved in more fundamental research, such as the study of enzyme systems in the body and of the ways in which various physiological conditions modify such systems. Work of this kind, it is hoped, will provide indications of chemical structures of potential therapeutic usage.

The physical chemist is concerned principally with physical measurements such as absorption spectra, nuclear magnetic resonance, optical rotatory dispersion, and X-ray diffraction, to verify chemical structures and to check the occurrence of polymorphic crystal forms which may have widely differing biological activities. The physical chemist may also be involved in testing the stability of a drug, both as a pure material and in aqueous solution.

The analytical chemists serve several functions, mainly as a service group. The organic chemists require routine elemental analyses of their products and intermediates. When a new drug is found, then analysts must develop specific assays for the chemical entity, both in pure form and in the various pharmaceutical formulations proposed. Thirdly, analysts are involved in the routine physical and chemical analysis of raw materials and finished products.

Microbiological research in the U.S. Pharmaceutical industry is now channeled into five areas: 1) discovery, evaluation, and production of antibiotics; 2) production and evaluation of vaccines and immunizing biologicals (including viruses); 3) microbial production of food supplements including amino acids, vitamins, and growth factors; 4) transformations of organic compounds of pharmaceutical interest; and 5) the search for pharmacologically active materials in microorganisms.

All of these programs require not only microbiologists, but often the cooperation of bacteriologists, geneticists, mycologists, biochemists, and organic chemists is needed. For example, in a program searching for new antibiotics, the bacteriologists and biochemists prepare concentrates from various fermentations which are evaluated by the bacteriologist in infectious diseases in animals and observed by the pharmacologist and pathologist. Once "interesting" activity is found, the chemist is often asked to assist in the isolation of "pure, active material." When the pure compound is available, the chemist will determine the structure and will seek to make useful derivatives and analogs,

while, at the same time, the biochemist will attempt to determine the mechanism of action. If the chemistry is complex (as is the case with most antibiotics), a geneticist may be enlisted to prepare new cultures of the antibiotic-producing microorganisms which produce more of the desired substance. Thus, it is conceivable that more than forty people will be involved in laboratory studies and related activities prior to preclinical pharmacology and clinical trial.

Scientists of various disciplines, including pharmacology, biochemistry, organic and physical chemistry, zoology and bacteriology, may be involved in the preclinical testing and evaluation of a new drug. Meaningful biological tests using laboratory animals such as rats, dogs, and monkeys are designed to test the pharmacological actions of the chemical entities. Potential antibacterials, antivirals, and related drugs must be tested against a broad spectrum of microorganisms. If these preliminary tests are promising, short- and long-range toxicity studies must be performed and dose levels suitable from both the pharmacological response and toxicity points of view must be determined.

As previously pointed out, laboratory animals are used extensively by pharmaceutical research facilities. The types of animals used include dogs, cats, monkeys, rabbits, guinea pigs, rats and mice. The animal colonies where these test animals are housed can be a major wastewater source. The animal cages are usually dry cleaned and the residue washed into the plant sewer system. The collected feces and any animal carcasses are incinerated or landfilled if the waste matter is not infected. The exhaust gases from the incinerators pass through wet scrubbers, and the scrubber blowdown is subsequently discharged to the plant sewer system.

Basis for Assignment to Subcategories

The categorization assigns pharmaceutical production facilities to specific subcategories according to the manufacturing processes which they utilize. The subcategories selected were:

Subcategory	Description	SIC
A	Fermentation Production	2833
B	Biological Production & Natural Extractions	2831 2833
C	Chemical Synthesis Production	2833
D	Mixing/Compouding or Formulation Production	2834
E	Research	--

This subcategorization was based on the wastewater quantities and qualities generated by each of these production categories. Table VA-1 indicates the plant production levels, wastewater flow rates, and RWL's which typify each of the subcategories. The characteristics of the wastewaters generated by industries falling into each of the subcategories is also discussed in Section V. Subcategory C (Chemical Synthesis) is further divided according to manufacturing processes. This was necessary due to the signficant variance in raw waste loads with production levels observed in this category. For this reason, all industries which produce antibiotics by chemical synthesis fall into subcategory C_2, and all others are grouped into subcategory C_1.

For subcategory E, which encompasses research facilities, a different measure was used for establishing effluent limitations, i.e., total built-up area. The raw waste loads computed on a total built-up area basis were comparable. The number of test animals supported by a research facility was also investigated as a basis for calculating RWL levels for category E; however, this parameter did not prove to be as consistent as total built-up area.

B. Gum and Wood Chemicals Industry

Discussion of the Rationale of Categorization

In developing effluent guidelines and standards of performance for the Gum and Wood Chemicals industry, it was necessary to determine whether significant differences existed within the industry which could be used as a basis for subcategorization, to define those areas of the industry where separate effluent limitations and standards should apply. A final subcategorization was developed based on product differences:

A. Char and charcoal briquets
B. Gum rosin and turpentine
C. Wood rosin, turpentine and pine oil
D. Tall oil rosin, pitch and fatty acids
E. Essential oils
F. Rosin derivatives

The following factors were considered in determining whether such a subcategorization would be the most meaningful one for developing effluent guidelines and standards of performance:

Manufacturing Process

The process steps by which gum, wood, tall oil chemicals and essential oils are produced are similar in that steam distillation is employed for mechanically separating the major constituents. Wood chemical production processes are somewhat different in that solvent extraction is employed. The production of charcoal and rosin based derivatives is different from the other processes because steam distillation is not employed. Charcoal is a carbonization, or destructive distillation, product, while rosin derivatives are products of chemical reactions. Therefore, it is concluded that production processes for charcoal and rosin derivatives are significantly different from the manufacturing processes employed in the other industries.

Product

The major products presented above are significantly different. The essential oils are chemically related to turpentine. However, their product yield, based on raw materials, is about one percent because there is no market for the spent wood, while the total product yields for gum and wood chemicals approach 100 and 25 percent respectively, on a clean raw-materials basis. Thus, it would not appear justifiable to group

essential oils production with gum or wood chemicals because of differences in product make up yield.

Raw Materials

The basic raw materials for each of the proposed product subcategories are as follows:

Product	Raw Material Source
Char and Charcoal Briquets	Hardwood and softwood scraps
Gum Rosin and Turpentine	Crude Gum from the sapwood of living trees
Wood Rosin, Turpentine and Pine Oil	Wood stumps and other resinous woods from cut over forest
Tall Oil Rosin, Pitch and Fatty Acids	By-product crude tall oil from the Kraft process
Essential Oils	Scrap wood fines, twigs, barks or roots of select woods
Rosin Derivatives	Rosin products from gum, wood and tall oil chemicals

Variation in raw materials can be expected within each group. For example, seasonal changes bring about changes in crude gum composition. Late in the growing season, crude gum is termed scrape, which generally contains less turpentine and more trash.

However, variations in quality can be expected in the raw material stocks within any of the groups. Where variations in raw materials require additional processing to achieve product quality, it is probable that additional waste will be generated. For purposes of this study these ancillary refining processes can be classified into groups according to the type of waste they generate (i.e., wet or dry). Filtration and absorption processes, which generate semi-solid waste disposed of in landfills, are classified as dry. Acid treating and solvent extraction processes generate a liquid waste and therefore are classified as wet. The solvent, however, is normally recovered for reuse.

Dilute acid treatment is commonly employed to remove odor and color bodies and can be expected to yield higher raw waste loads per unit of production. The prevalence of acid treating of raw materials, the quantity of specific pollutants generated, and the impact of dry versus wet refining methods on the final products and resulting RWL's could not be quantified in this study.

Plant Size

Operations in the Gum and Wood Chemicals industry range in size from intermittent batch operations, which are operated by a handful of personnel, to large complexes, which employ hundreds of personnel. Water use management techniques are affected by economy of scale, as well as other factors, such as geographical location. On the other hand, smaller operations may have waste treatment and disposal options, such as retention, land spreading, and trucking to landfill, that are impractical for large scale operations.

The impact of plant size was evaluated for essential oil production. RWL's were calculated before and after a plant modernization which replaced a battery of 32 small retorts with 3 larger retorts. The modernization decreased water usage but increased the total quantity of oxygen-demanding materials in the wastewater as shown below:

RAW WASTE LOAD	SMALL UNITS	LARGE UNITS
Flow (gal/M lbs)	20,200	7,440
COD (lbs/M lbs)	59.4	86.9
BOD (lbs/M lbs)	24.0	70.8
TSS (lbs/M lbs)	10.1	0.4

This specific information, however, would not be applicable to Gum and Wood Chemicals industry as a whole.

Plant Age

Plant age cannot be considered as a basis for subcategorization in itself because the industry has continuously upgraded and modernized its operations as dictated by the competitive market. Equipment is modernized as it becomes necessary, so that the actual age of a production facility could not be determined accurately. Furthermore, the actual age of the equipment does not necessarily affect wastewater generation. Operation and maintenance of the equipment are more important factors.

Plant Location

Table IVB-1 shows that most of the U.S. Gum and Wood Chemical industry is located in the southern states. According to the 1972 Census of Manufactures, half of the establishments in gum and wood chemicals production are located in the southern states, and they produced over 84 percent of the industry output in terms of dollar value added to the raw material.

Plant location, and specifically local climate, has an impact on the performance of certain end-of-pipe wastewater treatment system, e.g., aerated lagoons and activated sludge.

Air Pollution Control Technology

Air pollution is not a major problem in any of the manufacturing activities in the six product groupings. Particulate emissions were observed to be a potential problem in pneumatic conveyance systems. However, these emissions can be controlled with more efficient dry cyclone separators. This will not have any impact on wastewater generation.

Reaction and refluxing oils from rosin derivatives production are employed to scrub non-condensable organics which might escape to the atmosphere via the steam jet ejectors. Two plants that manufactured rosin derivatives were visited during the field survey. One of the plants vented the non-condensables to the atmosphere, and no significant impact on pollutant loading per unit of production was observed. The total quantity of non-condensable organics vented was probably very small.

A fugitive dust problem was observed at a char and charcoal production unit. The existing control methods employed a water spray, but quantities were not sufficient to cause contaminated runoff. It is anticipated that the ultimate solution of the fugitive dust problem would involve an improved materials-handling system and the elimination of dust-wetting techniques.

In conclusion, air pollution is controlled in the Gum and Wood Chemicals industry by dry mechanical devices and wet-scrubbing units which do not affect wastewater loading or characteristics. Therefore, air pollution control technology is not a significant factor in categorization of the gum and wood chemicals industry.

Table IV B-1

Statistics by Geographical Areas
Gum and Wood Chemicals Industry

Geographical Area	Value added by Manufacturer $\$10^6$	Value added by Manufacturer Percent	Establishments Number	Establishments Percent
Northeast Region	4.8	3.1	22	16.3
North Central Region	13.6	8.8	40	29.6
South Region	129.6	84.1	68	50.4
West Region	6.1	4.0	5	3.7
	154.1	100.0	135	100.0

Source: 1972 Census of Manufacturing

Solid Waste Disposal

Significant quantities of solid residue are generated in the manufacturing processes of charcoal, gum, wood and essential oil production. Spent wood fines are the major fraction of the solids from wood rosin, turpentine and pine oil production and from production of essential oils. In both cases these wood fines are fed to boilers, where the residual BTU value of the fines is used to generate steam. The solids which are generated in the production of gum rosin and turpentine include the trash contained in the crude gum material plus filter aid material which may be employed in the filtration of the melted crude gum. Filter aid material is also known to be used for the product refining of oil of cedarwood. The use of filtration aids or adsorbent materials, such as powdered activated carbon, for refining final or intermediate products is common to all product categories. Such solids are normally disposed to sanitary landfills.

The handling and final disposal of solid wastes which may be generated in the Gum and Wood Chemicals industry has not been observed to have impact on the quantity or characteristics of the wastewater. Therefore, solid waste generation, handling, or disposal is not a basis for subcategorization.

Wastewater Quantities, Characteristics, Control and Treatment

Table IVB-2 shows the relative variation in the wastewater quantities and pollutants per unit of production. In reviewing the Table, some similarities in the pertinent RWL parameters are apparent; however, the variations provide added justification for the proposed categorization.

The control and treatment of wastewaters for each of the product categories is discussed in Section VII of this document. Variations in the proposed treatment concepts, though not totally dissimilar, will provide additional justification for the proposed categorization.

Summary of Considerations

For the purpose of establishing effluent limitations guidelines and standards, the Gum and Wood Chemicals industry should be categorized by major product grouping. Table IVB-3 provides a summary of the factors considered for categorization, and indicates those factors considered for categorization and those factors considered pertinent. The factors which were significant in developing the basis for categorization include the following:

Table IV B-2

Comparison of Raw Waste Loads
By Product Grouping

Production	RWL Characteristics				
	Flow	BOD	COD	TSS	Oil
Char and Charcoal	Zero	N/A	N/A	N/A	N/A
Gum Rosin and Turpentine	*	XXX	XXX	X	XX
Wood Rosin, Turpentine, Pine Oil	***	XXX	XXXX	XX	XX
Tall Oil Fractionation Products	**	XXX	XXX	X	XXX
Essential Oils	***	XXXX	XXXX	XX	X
Rosin Derivative	*	XXX	XXX	X	XX

Legend

Flow	*	≤ 100 Gallons/1,000 lbs. Product
	**	100 to 1,000 Gallons/1,000 lbs. Product
	***	1,000 Gallons/1,000 lbs. Products
Other RWL's	X	≤ 0.1 lb./1,000 lbs. Product
	XX	0.1 to 1.0 lb./1,000 lbs. Product
	XXX	1.0 to 10.0 lbs./1,000 lbs. Product
	XXXX	>10.0 lbs./1,000 lbs. Product

Table IV B-3

Factors Considered for Basis of Gum and Wood Chemicals Industry Subcategorization

Factors	Proposed Subcategorization					
	Char, and Charcoal Briquets	Gum Rosin, and Turpentine	Wood Rosin, Turpentine and Pine Oil	Rosin, Pitch, and Fatty Acids	Essential Oils	Rosin, Derivatives
Manufacturing Process	X	-	X	-	-	X
Product	-	X	X	-	X	-
Raw Material	-	X	X	X	-	X
Plant Size	-	-	-	-	-	-
Plant Location	-	-	-	-	-	-
Air Pollution Control Technology	-	-	-	-	-	-
Solid Waste Disposal Operations	-	-	-	-	-	-
Wastewater Quantities Characteristics, Control, and Treatment	X	-	X	X	X	-

Legend

X denotes a contributing factor for categorization
- denotes factor was considered not pertinent for categorization

1. Production Processes
2. Product Types and Yields
3. Raw Material Sources
4. Wastewater Quantities, Characteristics, Control and Treatment

As Table IVB-3 shows, the five other factors also examined did not justify further subcategorization based on the observations made throughout this study.

Description of Subcategories

Subcategory A - Char and Charcoal Briquets

Plants included under subcategory A are those engaged in the manufacture of char and charcoal briquets, as well as pyroligneous acids and other by-products. Char and charcoal from hardwood and softwood distillation are economically the most important products in the Gum and Wood Chemicals industry. Char and charcoal are produced by the carbonization of wood, which is the thermal decomposition of raw wood.

Subcategory B - Gum Rosin and Turpentine

Plants included under subcategory B are those engaged in the manufacture of gum rosin and turpentine by the distillation of crude gum. Gum rosin and turpentine products make up 2.3 percent of the total product value for the Gum and Wood Chemicals industry, according to the 1972 Census of Manufactures, high labor costs for gum collection and the development of less costly substitute products have caused a decline in the value of product shipments in this category. The plants which were visited during this study operated only on intermittent schedules.

Subcategory C - Wood Rosin, Turpentine and Pine Oil

Plants included under subcategory C are those engaged in manufacturing wood rosin, turpentine and pine oil. These industries use solvent extraction and steam distillation as their manufacturing processes, and their typical raw materials are resinous wood stumps. These products account for 19 percent of the total product value for the total industry, according to the 1972 Census of Manufactures. The economic life of this subcategory is limited by a lack of available raw materials near existing plants and the development of economically competitive processes within the Gum and Wood Chemicals industry.

Subcategory D - Tall Oil Rosin, Fatty Acids and Pitch

Plants included under subcategory D are those which manufacture tall oil rosin, fatty acids and pitch by fractionation of Kraft process crude tall oil. The growth of the tall oil refining industry has been unabated since the inception of modern technology in 1949. Technology for the production of high-purity tall oil rosin and fatty acids is fairly recent. Modern fractionation techniques yield fatty acids and rosins with very low cross-product contamination.

Subcategory E - Essential Oils

Plants included under subcategory E are those which manufacture the rosin derivatives: esters, adduct modified esters, and alkyds. These are produced by chemical reations involving rosins, monohydric or polyhydric alcohol, and chemical modifiers. Most of the rosins produced in the United States are actually rosin-derived products, in which the rosins are modified to eliminate undesirable properties and to enhance their application in many manufacturing processes.

Process Descriptions

The following pages in this section contain a profile of the findings made during field surveys of the Gum and Wood Chemicals industry. The profiles contain typical process flow schematic diagrams, grouped according to the proposed subcategorization of the industry.

Subcategory A - Char and Charcoal Briquets

Char or charcoal is produced by the carbonization of wood, which is the thermal decomposition of the raw wood. The product yield and purity are a function of the kiln temperature. Above 270°C, exothermic reactions set in, and the process can be self-sustaining with the rate of carbonization normally controlled by limiting the air feed to the kiln. Higher-temperature reactions produce a higher carbon content product but reduce the product yield. During the decomposition of the wood, distillates are formed and leave the kiln with the flue gases. The condensable distillates are collectively referred to as pyroligneous acid, which contains methanol, acetic acid, acetone, tars, oils, and water. These materials have steadily declined in economic importance because of cheaper methods of producting synthetic substitutes; therefore, most plants have discontinued recovery of the by-products from the pyroligneous acid. Instead, the distillate and other flue gases are fed to an afterburner for thermal destruction before the flue gases are exhausted to the atmosphere. The condensable distillates may also be recycled as fuel for

the kiln or recycled in the vapor phase as a fuel supply supplement. The noncondensable gases contain CO_2, CO, CH_4, H_2 and some higher hydrocarbons. The exact composition of the gases depends on the distillation temperature.

A typical flow diagram for char and charcoal briquets manufacturing is illustrated in Figure IVB-1. During this study, no facilities which recovered distillation by-products were known to exist in the United States. The kiln depicted in Figure IVB-1 is loaded with a payloader. After the kiln is loaded, the wood is set afire and allowed to burn under controlled conditions for approximately 72 hours. The air for oxidation is then cut off and water injected in the kiln for quenching. Approximately 18 hours is required for the material to cool down; afterwards, it is removed by a payloader. Pine wood char is sold at this point in the process to fill specialized orders. Hardwood char is ground, then blended with starch binder and water for feed to the briqueting operation. The resulting briquets are dried and packaged in bags for sale.

The off gases from the furnaces presumably contain compounds such as acetic acid, methanol, acetone, tars, and oils. These materials are presently oxidized in the afterburners. The natural gas fuel required for the afterburners is a significant operating cost. An alternative emission control is now under consideration, in which off gases from the furnace would be scrubbed to remove the condensables from the flue gases. The resulting scrubber liquor would be sent to a separator where the pyroligneous acid could be recovered. The water and soluble compounds would be reused in the scrubber system. The separated products could then be recovered for sale or as an auxiliary fuel.

Subcategory B - Gum Rosin and Turpentine

Figure IVB-2 illustrates a process flow schematic for the manufacture of gum rosin and turpentine. The crude gum raw material is obtained by gum farmers who collect the gum from scarified longleaf pine and slash pine trees. The plant receives raw crude gum from the gum farmers in 435 lb-barrel shipments. These shipments contain some dirt, water, leaves, bark, and other miscellaneous trash. Gum is emptied into a vat by inverting the crude gum containers over a high-pressure steam jet. The melter liquifies the crude gum material, and recycled turpentine is added to reduce the viscosity. This mixture is filtered through a pressure filter where trash is periodically removed and hauled to a landfill. The filtered gum is then washed with water. Because iron and calcium causes gum rosin to discolor at high temperature, a small amount of oxalic acid may be added to the wash water to precipate the iron and calcium as an insoluble oxalate. The wash water

FIGURE IVB-1

CHAR AND CHARCOAL BRIQUET MANUFACTURING

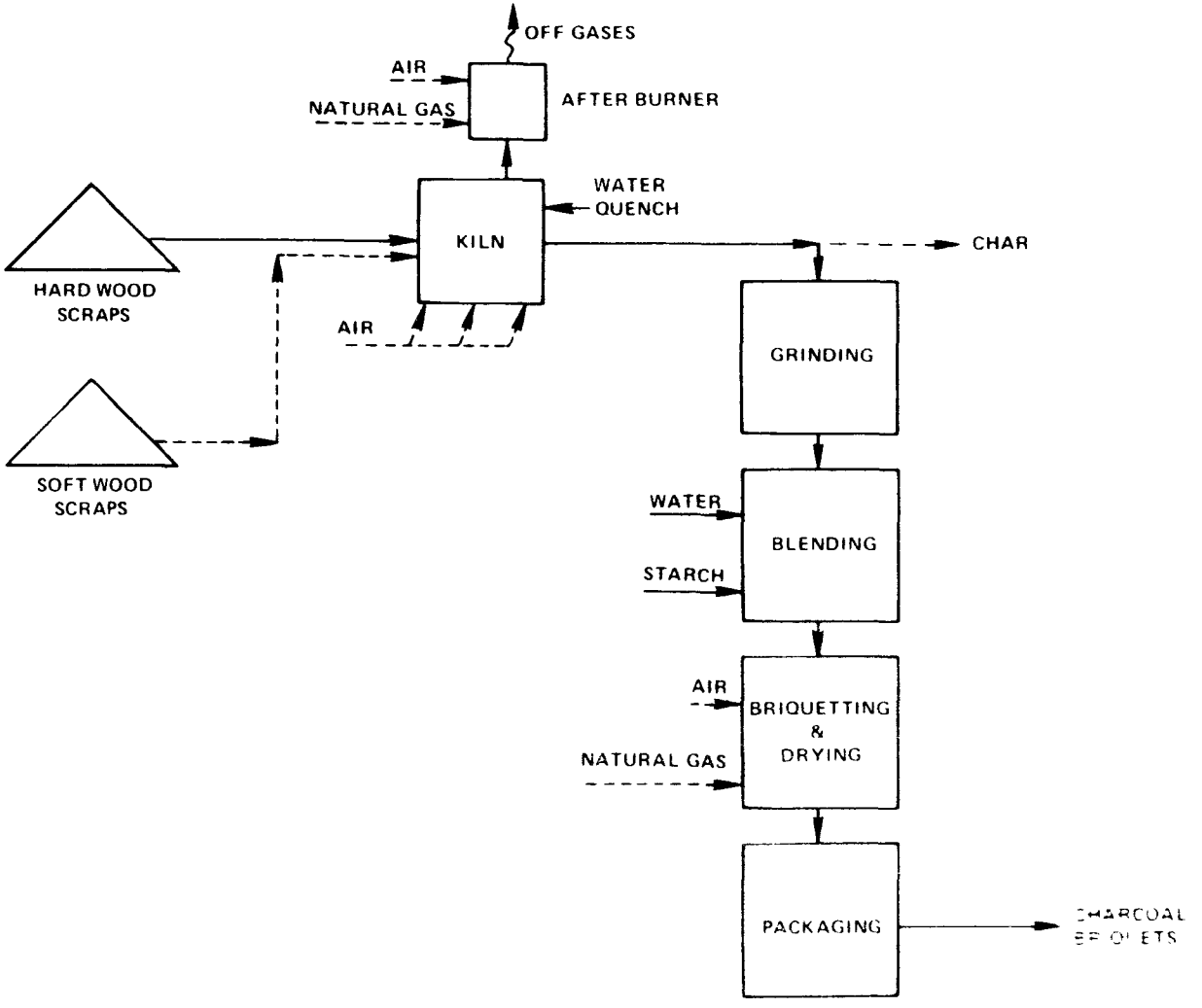

removes soluble acids and oxalate precipitate, and is then discharged for treatment. The prepared crude gum material is then distilled to separate the turpentine.

Noncontact shell-and-tube steam heating and sparging steam are used in the stills. Turpentine and water are distilled overhead and condensed with shell-and-tube condensers. The water is separated from the turpentine in the downstream receivers as shown in Figure IVB-2. The turpentine product is dried with a sodium chloride salt dehydrator, and the gum rosin is removed from the still after each batch distillation in a fluid state and packaged.

Subcategory C - Wood Rosin, Turpentine and Pine Oil

The raw material for this process is stumps obtained from the cut-over pine forests of the southern United States. The stumps are uprooted by bulldozers and freighted to the extraction plant on railroad flat cars.

Figure IVB-3 is a flow schematic diagram of the solvent extraction/ steam distillation plant which was surveyed.

The pine stumps from 40-60 year old long leaf pine trees are brought into the plant. The stumps are placed on a conveyor and are washed with 1,000 gpm of water at a pressure of 110 psi. The water and dirt flow to a settling pond where the dirt settles out and the water is recycled back to the washing operation. The accumulated dirt is periodically removed. Wood hogs, chippers and shredders mechanically reduced the wood stumps in size in a sequence operation until they become chips approximately 2" in length and 1/16" diameter. These chips are placed into intermediate storage. The wood chips are fed to a battery of retort extractors. The extraction process is accomplished in sequential steps as follows:

(1) Water is removed from the chips by an azeotropic distillation with a select water immiscible solvent which may be ketone or petroleum fraction such as benzene or naptha.

(2) Extraction of the resinous material from the wood chips with a select water immiscible solvent.

(3) Steaming to remove the residual solvent from the spent wood chips.

After the final step, the spent wood chips are removed from the retort and sent to the boilers as fuel. During steps 1 and 3, the steam-solvent azeotrope from the retorts proceeds to an entrainment separator.

FIGURE [illegible]

GUM ROSIN AND TURPENTINE PRODUCTION

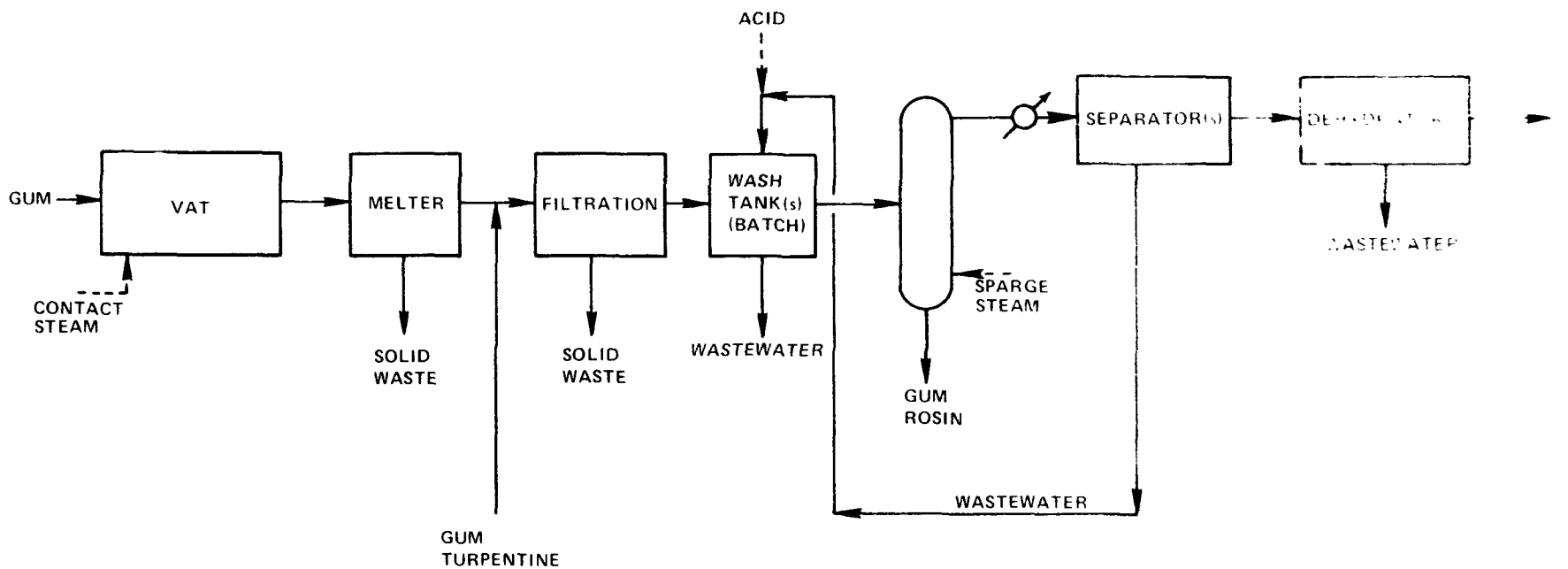

FIGURE IVB-3

WOOD ROSIN, PINE OIL, AND TURPENTINE PRODUCTION VIA SOLVENT EXTRATION

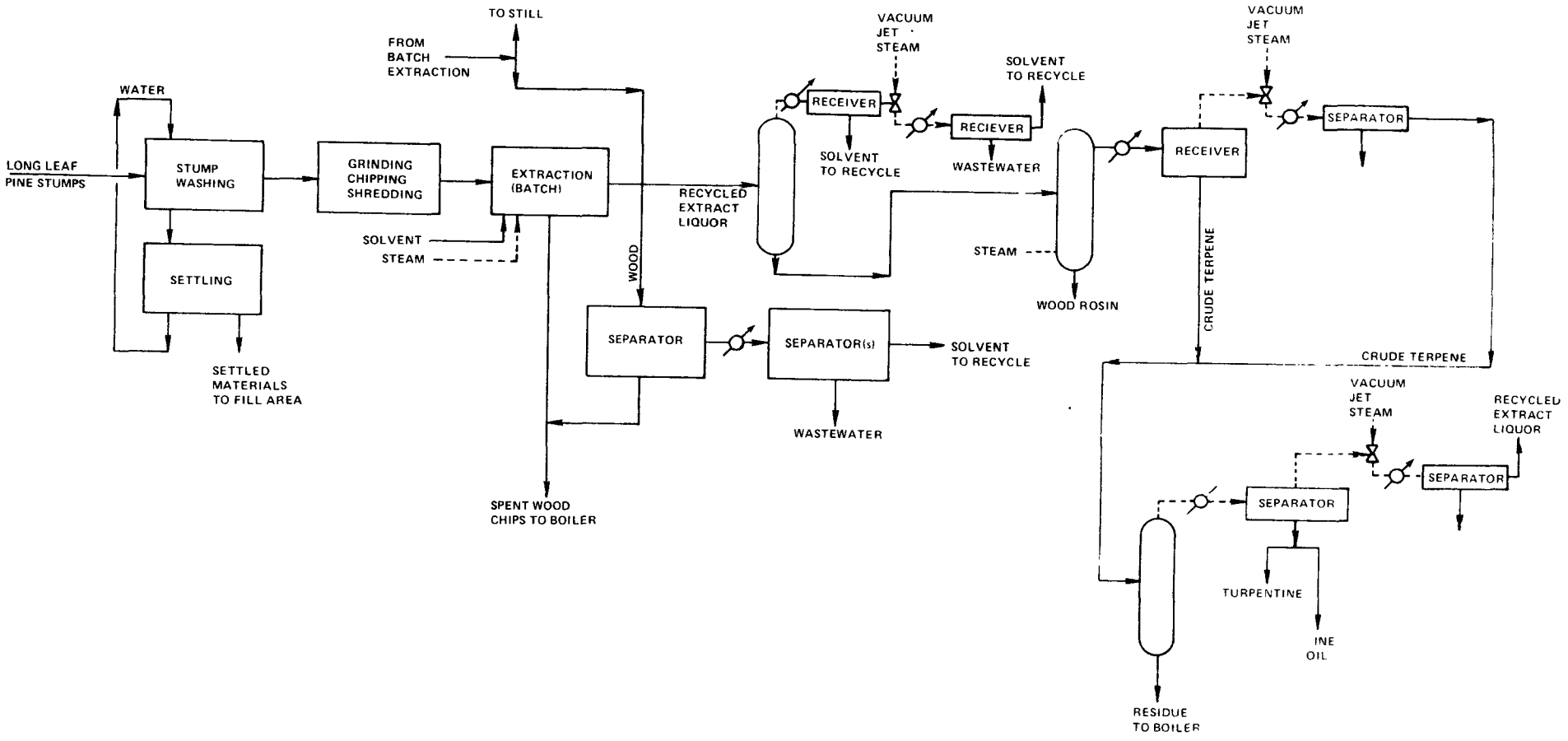

Subcategory D - Tall Oil Rosin, Fatty Acids and Pitch

Technology for the production of high-purity tall oil rosin and fatty acids is relatively recent compared to the age of the wood and gum rosin industry. The first commercial fractionation process was completed in 1949 by Arizona Chemical. The Arizona plant employed partial vacuum distillation techniques used in the petroleum refining industry and adapted to protect the integrity of tall oil's heat-sensitive constituents.

Modern fractionation techniques yield fatty acids which contain less than 2 percent rosin and rosins which contain less than 3 percent fatty acids. Distillation techniques employed prior to fractionation technology employed steam distillation which produced rosin and fatty acid products with relatively high cross-product contamination.

The plant which was surveyed during this study employed modern fractionation distillation techniques. A schematic process flow diagram of this crude tall oil (CTO) fractionation process is presented in Figure IVB-4.

The plant fractionates CTO to produce approximately 20 percent pitch, 49 percent fatty acids, and 31 percent rosin. In addition, part of the plant's pitch and rosin production is used captively for the production of paper sizes; however, no wastewater discharges were observed coming from this unit during the survey period.

The CTO is treated with dilute sulfuric acid to remove some residual lignins plus mercaptans, disulfides and color materials. The CTO then proceeds to the fractionation process. In the first fractionation column, the pitch is removed from the bottoms and is either sold, saponified for production of size, or burned in boilers to recover its fuel value. The remaining fraction of the tall oil (rosin and fatty acid) then proceeds to the pale plant, where the quality of the raw material is improved through the removal of unwanted materials such as color bodies. The second column in Figure IVB-4 separates low-boiling-point fatty acid material while the third column completes the separation of fatty and rosin acids.

Barometric contact condensers are employed to condense vacuum jet steam. The recirculated barometric contact water is cooled by a holding reservoir, while light separable organics are removed by means of an induced-draft cooling tower. This contact condenser water recirculation system produces little, if any, discharge of wastewater, and therefore is considered exemplary technology. Once-through cooling water is used in noncontact column reflux heat exchangers and product heat exchangers.

FIGURE IVB-4

CRUDE TALL OIL FRACTIONATION AND REFINING

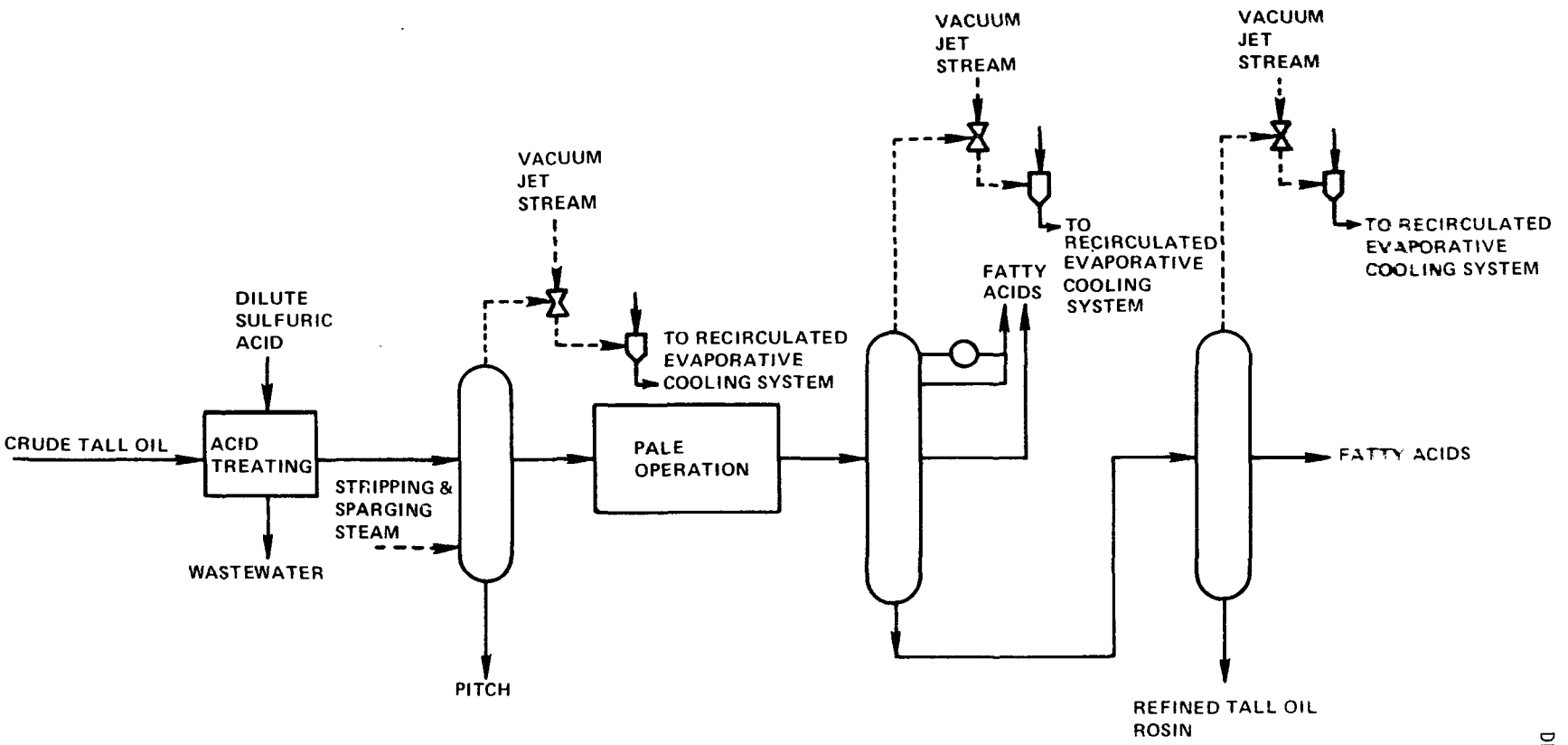

DRAFT

Any entrained wood fines coming from the retorts are removed in the entrainment separator and are used in the furnace as fuel. The vapors from the entrainment separator are condensed and proceed to one or more separators where the solvent-water mixture separates. The solvent is recycled for use in the retorts.

The extract liquor leaving the retorts during step 2 is placed into intermediate storage tanks prior to further processing. The contents of these tanks are sent to a distillation column to separate the solvent from the products. The column is operated under vacuum conditions maintained by a steam ejector. The overhead from the column is condensed and enters a separator where condensed solvent is removed and recycled to the retorts. The vapor phase from the separator, along with the steam from the ejector, is condensed in a shell-and-tube exchanger and enters a separator. Here the separation is made between the remaining solvent and the condensed steam from the ejector. The solvent is sent to recycle and the water to treatment.

The bottoms stream from the first distillation column enters a second distillation column, also operated under vacuum, as shown in Figure IVB-3. Steam is introduced into the bottom of the tower to strip off the volatile compounds. This overhead stream enters a condenser and separator. A portion of the condensed liquor phase is refluxed back to the distillation column, while most of it is stored as Crude Terpene for further processing. The steam from the vacuum ejector and the vapor phase from the separator are condensed in a shell-and-tube exchanger and then sent to a separator. The nonaqueous phase from the separator is stored as Crude Terpene while the aqueous phase is removed as wastewater. The bottom stream from this second distillation column is the finished wood Rosin product.

The crude terpene, which has been removed in the second distillation column, is stored until a sufficient quantity has been accumulated, when this material is processed in a batch distillation column. The distillation column is charged with the crude terpene material, the overhead vapors are condensed in a shell-and-tube exchanger, and the condensed material enters a separator. The turpentine and pine oil products are removed from this separator while the vapors and the steam from the steam ejector enter a second shell-and-tube exchanger and proceed to a separator. The nonaqueous phase from the separator is recycled to the extract liquor storage while the aqueous phase is sent to wastewater treatment. The bottoms from this batch distillation column is a residue containing high-boiling materials, best described as pitch. This residue is used for fuel.

FIGURE IVB-5

DISTILLATION AND REFINING OF ESSENTIAL OILS

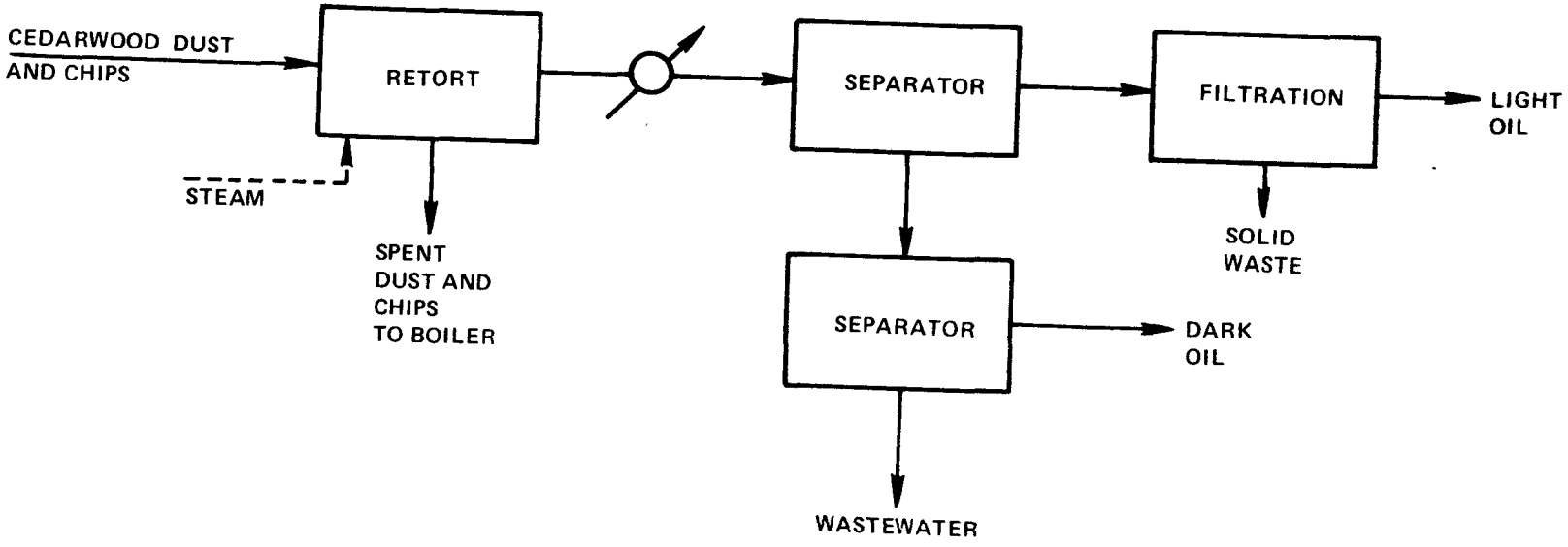

metal salts. The rosin derivative manufacturing industry has modified the various rosins to eliminate these undesirable properties and to enhance their application in the foregoing production and their many others.

During this study, two facilities which manufactured rosin derivatives were surveyed. Plant No. 1 was producing wood rosin ester and a phenolic modified tall oil ester during the survey. Plant No. 2 produces tall oil and gum rosin based esters, maleic anhydride, fumaric acid, substituted phenolic, and other modified rosin based esters, as well as glycerol phthalate alkyd. Historical data on the manufacture were used, along with survey data, to determine RWL's.

It should be noted that there are many rosin-derivative manufacturing processes which were not included in the study. Those processes which were not surveyed include: isomerization, oxidation, hydrogenation, dehydrogenation, polymerization, salt formation, and decarboxylation.

Figure IVB-6 illustrates the process at Plant No. 2. The processes at Plant No. 1 are similar, except that the vacuum jet steam is exhausted to the atmosphere and the process wastewater is discharged from the receiver without separation.

Process operating conditions in the reaction kettle are dependent on many variables, such as product specification and raw materials. For example, at Plant No. 1 a simple ester is produced from stump wood rosin (WW GRADE) and U.S.P. glycerin. The esterification reaction takes place under high-temperature vacuum conditions. During the process, a steam sparge (lasting approximately 2-3 hours) is used to remove excess water of esterification, which allows completion of the reaction and removes fatty acid impurities for compliance with product specifications. The condensable impurities are condensed in a noncontact condenser on the vacuum leg and stored in a receiver. Noncondensables escape to the atmosphere through the reflux vent and steam vacuum jets. Plant No. 1 also produces phenol and maleic anhydride-modified tall oil rosin esters. The process operation is very similar to simple rosin ester production except that steam sparging is seldom if ever used, and other polyhydric alcohols may be used in the product formulation.

Plant No. 2 produces rosin-based esters, maleic anhydride, fumaric acid, substituted phenolic, and other modified rosin based esters, as well as a glycerol phthalate alkyd. Kettle cook times and pressure conditions vary with type of product. No contact sparge steam is used except for the production of resins to be used in hot-melt adhesives and chewing gum products, wherein steam sparge is used at the end of the cook to remove lights and odors. Unwanted materials, such as fatty acids, water of esterification, and sparge steam, are pulled from the kettle by means of the vacuum leg. Condensable materials are condensed

FIGURE IVB-6

ROSIN DERIVATIVES MANUFACTURE

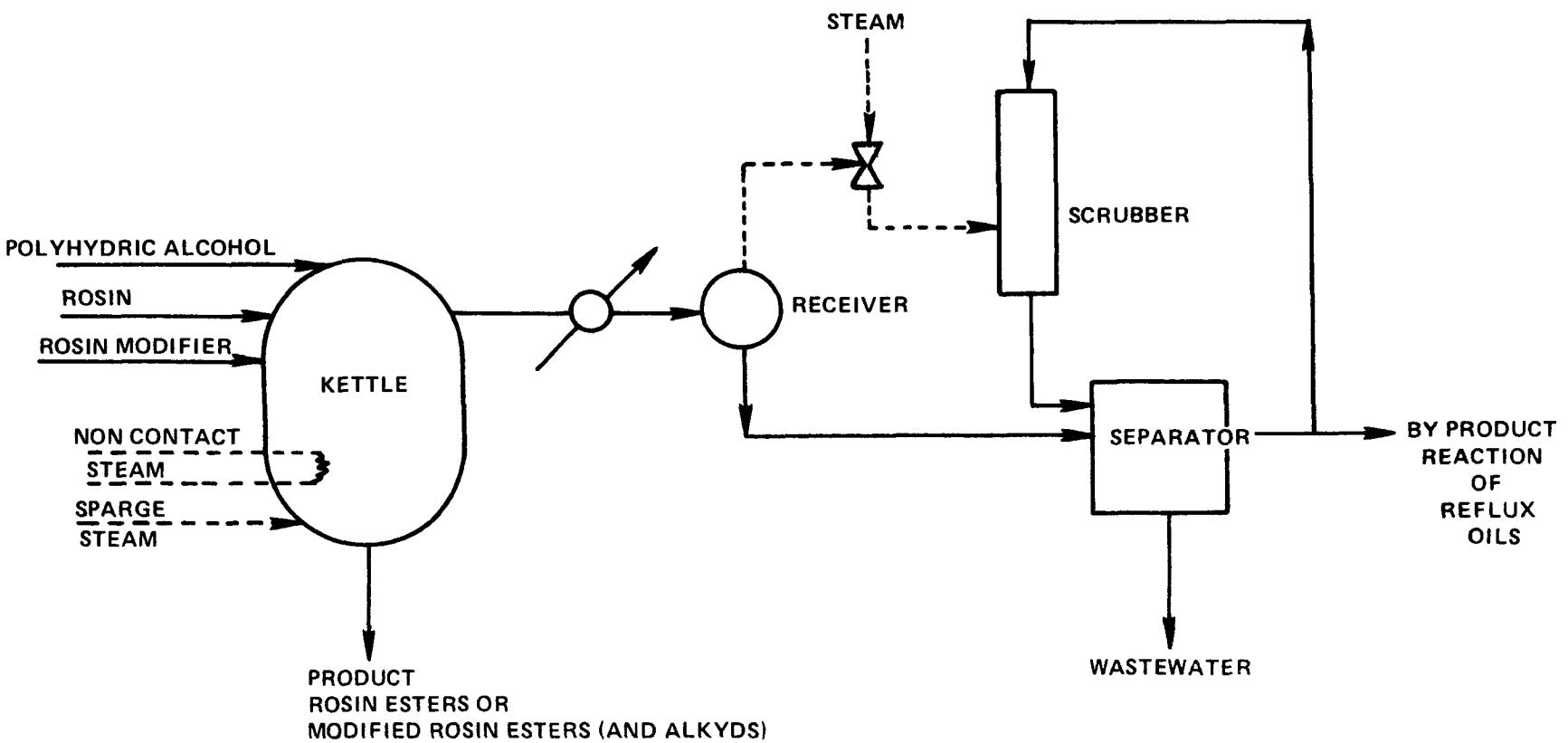

in a noncontact condenser and separated from the noncondensables in the receiver. Separable materials, such as fatty acids and reaction and reflux oils, are separated from the processes wastewaters in the separator. Vacuum jet steam and most noncondensable materials are removed in a scrubber which uses a recirculated oil stream from the separator. The oils are recovered for secondary market.

C. Pesticides and Agricultural Chemicals Industry

Rationale of Categorization

Industry subcategories were established so as to define those sectors of the Pesticides and Agricultural Chemicals industry where separate effluent limitations and standards should apply. The underlined distinctions between the various groupings have been based on the wastewater generated, its quantity, chemical characteristics, treatability, and the applicability of control and treatment technologies. The following factors were considered in determining whether such subcategorizations are justified:

Manufacturing Processes

Pesticide plants which manufacture active ingredient products use many diverse manufacturing processes. Rarely does a plant employ all of the processes found in the industry, but most plants use several in series. The principal processes utilized include chemical synthesis, separation, recovery, purification, and product finishing, such as drying.

Chemical synthesis can include chlorination, alkylation, nitration, and many other substitutive reactions. Separation processes include filtration, decantation, and centrifuging. Recovery and purification are utilized to reclaim solvents or excess reactants as well as to purify intermediates and final products. Evaporation, distillation, and extraction are common processes in the Pesticides and Agricultural Chemicals industry. Product finishing can include blending, dilution, pelletizing, packaging, and canning.

It is concluded that because of manufacturing differences, the formulating/packaging industry requires separate categorization to the active ingredient manufacturing sectors. Since diverse processes are used by all sectors of the active ingredient industry, as discussed above, manufacturing process alone is not a comprehensive basis for categorization.

Product

Four fundamental pesticide subcategories are evident based on the generic class of the product and the process chemistry employed:

A. Halogenated Organic
B. Phosphorus-Containing
C. Nitrogen-Containing
D. Metallo-Organic

In addition to the above generic classes, formulation and packaging of ingredient pesticides generate wastewaters with qualities and volumes different from the four basic categories. This is because the starting material is generally a pesticide active ingredient and the principal wastewaters result from equipment cleanout operations. The manufacturing processes are usually relatively simple in nature with few chemical synthesis processes. Accordingly, a fifth industry subcategory is required for the formulation and packaging product class:

E. Formulators and Packagers

Raw Materials

Since it can be assumed that the raw materials used in the Pesticides and Agricultural Chemicals industry are basic feedstocks specific to the product being manufactured and with narrow ranges of quality and purity, the choice of raw material does not have a significant impact on the nature or quantities of waste products generated, and, accordingly, wastewater volumes and qualities are not affected by choice of raw materials. Thus, the selection of raw materials is not a significant factor on which to base subcategorization.

Plant Size

There are nearly 100 plants in the United States engaged in the production of pesticidal active ingredients, and possibly as many as 500 facilities formulating the active ingredients into final products, such as liquids, dusts, and packaged aerosols. The sizes of process units, production complexes, and individual companies in the Pesticides and Agricultural Chemicals industry sector are not published and they were not available for the purposes of this study. Based on information obtained during plant visits, it is obvious that plant size can vary appreciably. Plant size will not affect the applicability or performance of control and treatment technologies, but potentially will impact markedly on the cost of treatment. Accordingly, plant size is not considered as a subject for subcategorization of the Pesticides and Agricultural Chemicals industry.

Plant Age

Pesticide plants currently in operation are relatively new, commissioned predominantly in the post-World War II period, and the general processing technologies have not changed appreciably. Different processing modes, such as batch, semi-continuous and continuous, are utilized based on product type, inherent process requirements, and economies of scale, and not because the technology on equipment has changed significantly over the years. Therefore, it is concluded that plant age is not a significant factor for subcategorization.

Plant Location

Pesticide plants are distributed throughout the United States (refer to Figure IIIC-1). Based on analysis of existing data presented in recent studies and the results of plant visits to the South, Midwest, and North geographical areas of the country, plant location has little effect on the quality or quantity of the wastewater generated. Geographic location, however, can influence the performance of aerated and stabilization lagoons, but low performance problems can be overcome by adequate sizing or selection of alternative processes, such as activated sludge.

Since most pesticide plants are relatively new, they tend to be located in rural areas. Those plants that are located in urban areas, however, tend to occupy and own less land, with the result that land costs for treatment facilities are higher.

Taking the above points into account, it can be said that, other than costs associated with land availability, plant location is not a significant factor for further subcategorization of the Pesticides and Agricultural Chemicals industry.

Housekeeping

Housekeeping practices vary within the industry; however, they are influenced more by philosophy of the company and personnel involved than by the manufacturing process or product mix. In many cases, plants with comprehensive treatment facilities or a history of good treatment exhibit good housekeeping techniques. This phenomenon is founded on necessity and experience that dictate that good treatment requires good housekeeping.

In view of these findings it can be concluded that housekeeping alone is not a reasonable factor for industry subcategorization.

Air Pollution Control Equipment

No sector of the Pesticides and Agricultural Chemicals industry has an exclusive need for air pollution control equipment. Vapors and toxic gas fumes are frequently incinerated. Particulates can be removed by either baghouse or wet scrubbing devices. In all cases, the wastes produced by air control devices are treatable and do not serve as a basis for subcategorization.

Nature of the Wastes Generated

The type and characteristics of the wastes generated by the various sectors of the Pesticides and Agricultural Chemicals industry are

discussed fully in Section V. In brief, the nature of the generated wastes is a reasonable basis for subcategorizating the industry. The rationale behind such a subcategorization is adequately covered in the process descriptions subsections.

Treatability of Wastewaters

The treatability of the wastewater generated by the various sectors of the industry exhibit different characteristics and specific treatabilities. The waste types and treatabilities are related to the industry sector, its products and processes, and no generalized conclusions can be drawn. The impact of the product mix and processes is discussed in the subsections dealing with the industry process descriptions in the following pages.

Summary of Considerations

It was concluded, for the purpose of establishing effluent limitations guidelines and standards, that the Pesticides and Agricultural Chemicals industry should be grouped into five categories. This subcategorization is based on distinct differences in manufacturing processes, products, and wastewater characteristics and treatability. The five subcategories are:

A. Halogenated Organic
B. Organo-Phosphorus
C. Organo-Nitrogen
D. Metallo-Organic
E. Formulators and Packagers

Subcategory E is further subcategorized to reflect the wastewater differences between the water-based formulating/packaging industry (Subcategory E-1) and the nonwater-based sector (Subcategory E-2).

Description of Subcategories

Subcategory A - Halogenated Organic Pesticides

Plants included under Subcategory A are those engaged in the manufacture of those pesticides listed under halogenated organics in Table IIIC-4. In most cases the halogen component is chlorine. The chlorine groups generally are added via direct chlorination or via substitution from another chlorinated organic.

Subcategory B - Organo Phosphorus Pesticides

Subcategory B includes those pesticide products listed under phosphorus-containing in Table IIIC-4. The subcategory covers phosphates, phosphonates, phosphorothivates, phosphorothiovates, and phosphorus-nitrogen pesticide types.

Subcategory C - Organo-Nitrogen Pesticides

Plants included under Subcategory C manufacture those products listed in Table IIIC-4 under Nitrogen-Containing. This subcategory has more family groups and is the most diverse of all the pesticide subcategories.

Subcategory D - Metallo-Organic Pesticides

The metallo-organic pesticide subcategory could be considered a part of the inorganic and metallo-organic sector of the industry. However, since most inorganic pesticides are essentially simple inorganic chemicals, they are not covered in this document. The metallo-organic pesticides included in Subcategory D are listed in Table IIIC-4.

Subcategory E - Formulators and Packagers

Subcategory E includes all types of pesticide formulating, blending, packaging, canning, etc. It should be emphasized that the manufacture or production of active ingredients material is excluded from this subcategory. This subcategory can be further subcategorized, based on the nature of the production operations and the wastes generated, into water-based products (Subcategory E_1) and solvent-based dry products (Subcategory E_2).

Process Descriptions

Halogenated Organic Pesticides

Four major halogenated organic pesticide groups merit process descriptions and process flow diagrams. These groups are:

- DDT and its relatives
- Chlorinated phenols and aryloxyalkanoic acids
- Aldrin toxaphene
- Halogenated aliphated compounds

Although halogenated organic pesticides can involve other halogens, chlorinated compounds are more common and, in most cases, are illustrative of the processes and wastes associated with the other halogenated organic pesticides.

DDT and its relatives

Although present DDT production is on the decline, its manufacture is well documented in the literature and serves as a good example of the production and associated wastewaters for the DDT family of pesticides. Analogs of DDT can generally be prepared by simply changing the aldehyde to be reacted with the chlorobenzene in the presence of a dehydrating agent, usually concentrated sulfuric acid.

Figure IVC-1 is a simplified process flow diagram for DDT production and illustrates the type of wastewater generated. The process description that follows is an example of how the process(es) may be carried out commercially, although considerable variations exist in process equipment design, reactant concentrations, amount of recycle acid, and methods of purification.

An aldehyde, chlorobenzene, and concentrated (95-99 percent) sulfuric acid or oleum are charged to a steel reactor. Generally, the aldehyde and chlorobenzene are mixed together with part of the concentrated sulfuric acid. External cooling, or cooling by means of internal coils, is generally necessary to maintain the desired reaction temperature. The batch reaction can take several hours, or it may also be run continuously by using a number of reactors in series.

At the end of the reaction, the crude product goes to separators, where the spent acid separates. This acid contains small amounts of sulfonated chlorobenzene and aldehyde. The recovered acid is purified and concentrated for re-use. The product liquor from the top of the separator goes to a liquid-phase scrubber, where water is used to remove mechanically entrained sulfuric acid. The liquor is then washed with dilute caustic or sodium carbonate solution in a second scrubber and finally washed with water. The separator and scrubber are maintained at sufficiently high temperature to prevent product crystallization.

The neutralized product,containing chlorobenzene can be run to a column, where it is vacuum-distilled. The chlorobenzene distillate is passed through a separator and condenser and is finally pumped to storage for recycling. The molten product containing a small percent of chlorobenzene can be pumped to a still, where additional chlorobenzene is removed by continuous atmospheric distillation. The melt is maintained at a temperature to prevent crystallization.

The chlorobenzene-free product melt is generally run to a flaker (consisting of a chilled drum rotating through a steam heated feed trough), where it is chilled to flakes. The flaked product is then pulverized to the proper mesh size and either packaged in concentrated form or blended with inert extenders.

FIGURE IVC-1

GENERAL PROCESS FLOW DIAGRAM FOR DDT AND RELATED COMPOUNDS PRODUCTION FACILITIES

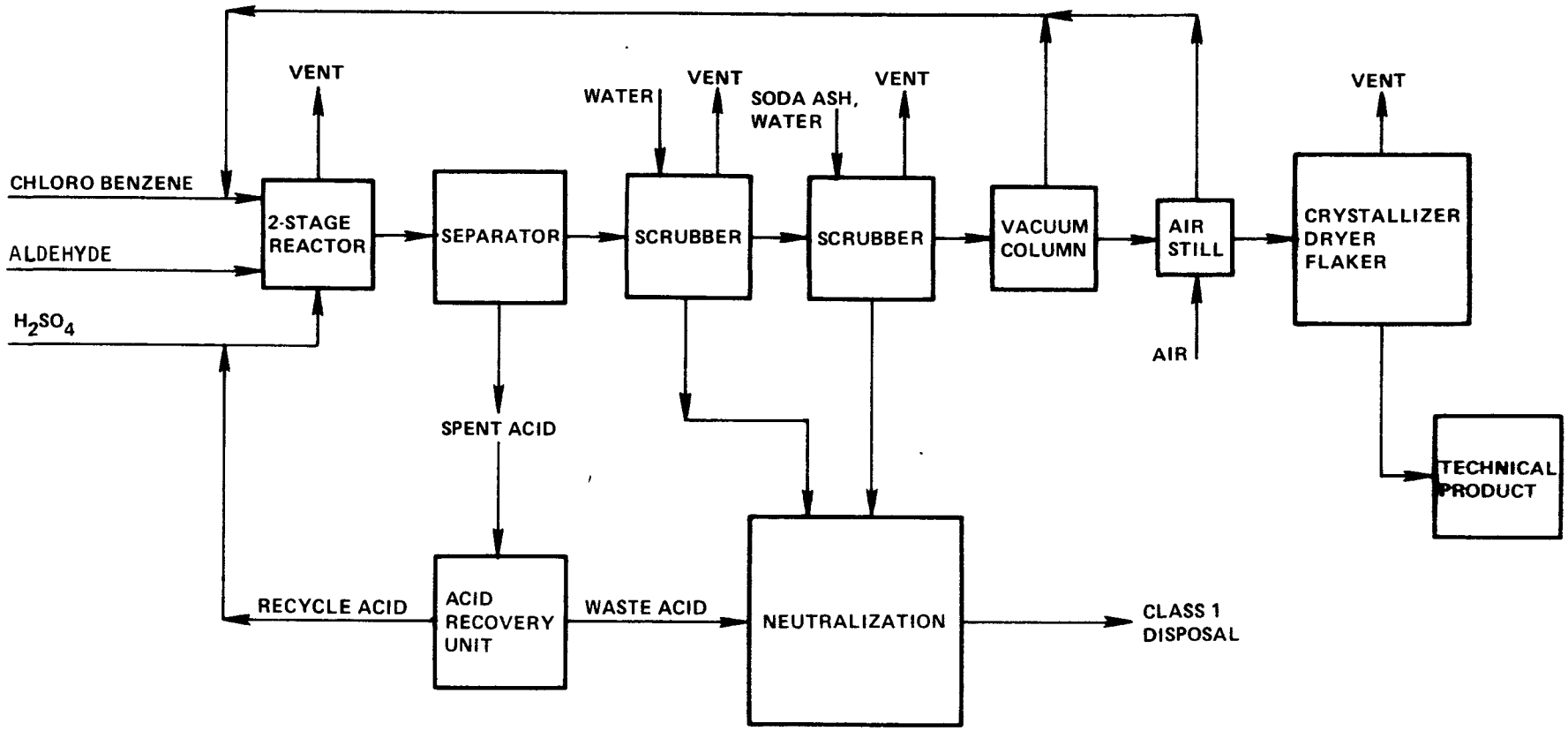

VENT: GASES ARE SCRUBBED (COLLECTED AND NEUTRALIZED)
DUSTS TO BAGHOUSE (COLLECTED AND RETURNED TO FORMULATION)

It is becoming standard practice to recycle as much spent acid as possible and to raise the acid concentration to the desired level by the addition of oleum.

In the purification and finishing of the product, the most common solvents used are petroleum fractions and excess chlorobenzene. In order to pulverize the product adequately, entrained solvent must be reduced to as low a concentration as possible. Some manufacturers develop friability by aging the product, others by grinding in the presence of dry ice.

In summary, the process wastewaters associated with the production of DDT and its analogs are:

Waste acid from acid recovery unit.
Scrub water from liquid phase scrubber.
Dilute caustic wastewater from caustic soda scrubber.
Production area clean-up wastes.
Scrubber water from vent gas water scrubbers.

Chlorinated Phenols and Aryloxyalkanoic Acids

Chlorobenzenes are used as a starting material in the manufacture of chlorinated phenols and in the manufacture of chlorinated aryloxyalkanoic acid pesticides. Figures IVC-2 and IVC-3 are simplified process flow diagrams for the manufacture of the chlorinated phenols and aryloxyalkanoic acids. Potential wastewater sources are shown.

Chlorobenzene can be converted to a phenol by reacting with dilute caustic soda or water and a catalyst in a reactor. Pentachlorophenol (PCP) is prepared by chlorinating the phenol in the presence of a catalyst (see Figure IVC-2). Excess hydrogen chloride and chlorine can be scrubbed with phenol and recycled to the reactor. The free hydrogen chloride is recycled to the chlorine plant. The crude PCP is distilled to remove tars which are finally incinerated. Molten PCP can then be prilled or reacted with NaOH to form the sodium salt.

Halogenated aryloxyalkanoic acids can be prepared by charging equimolecular quantities of a chlorophenol and a monochloroalkyl acid to a steam-heated closed kettle in the presence of dilute caustic. The method of synthesis for 2,4-dichlorophenoxyacetic acid (2,4-D) is generally applicable to the majority of the class. The reaction is carried on for several hours under reflux conditions, after which time the reaction mass is acidified (to approximately pH = 1.0) with dilute hydrochloric acid. The acidified liquor is sent to a crystallizer followed by a centrifuge. The reaction is carried out under optimum conditions of time, temperature, and rate of addition of

FIGURE IVC-2

GENERAL PROCESS FLOW DIAGRAM FOR HALOGENATED PHENOL PRODUCTION FACILITIES

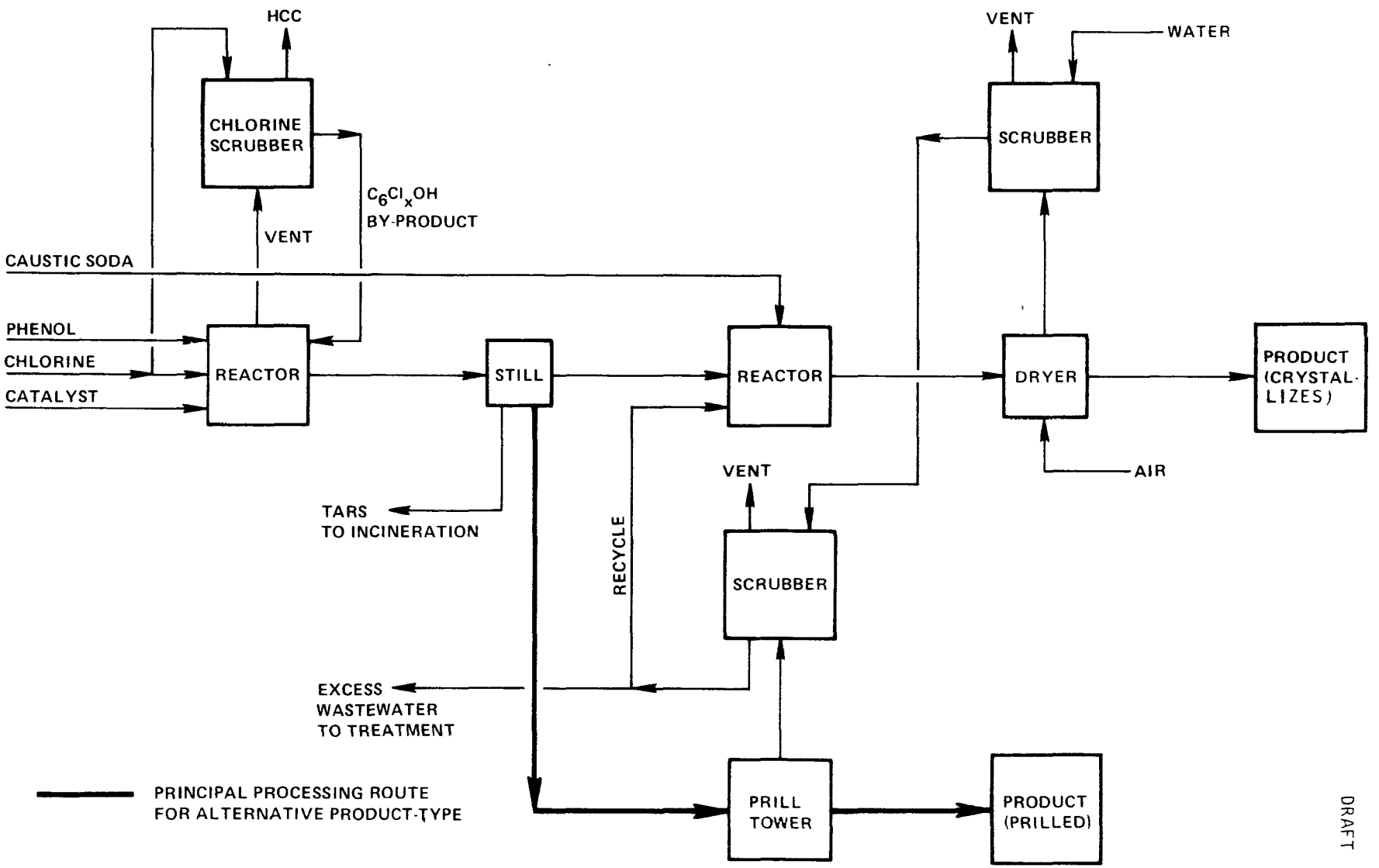

DRAFT

FIGURE IVC-3

GENERAL PROCESS FLOW DIAGRAM OF ARYLOXYALKANOIC ACID PRODUCTION FACILITIES

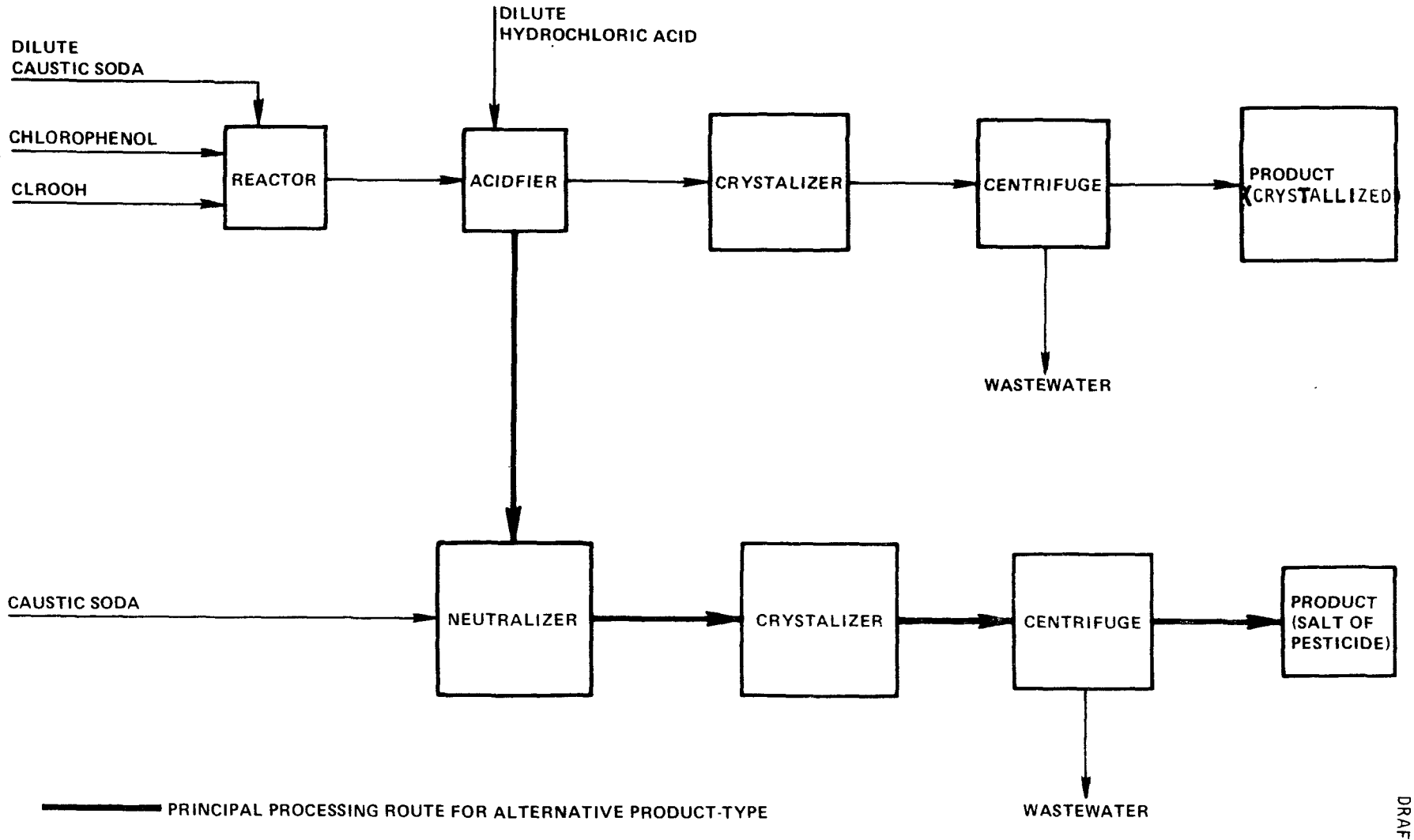

DRAFT

reactants to prevent hydrolysis of unconverted chloroalkyl acid. In one process variation, unreacted dichlorophenol is removed by distillation prior to acidification. In still another variation, the reaction is carried out in anhydrous monochlorobenzene (as a solvent) at the boiling point of the solvent; water is removed azeotropically. The insoluble product is separated from solvent by filtration.

Esters and amine salts are prepared by reacting the phenoxy alkyl acid with an alcohol or amine, respectively. These products have better formulation and application properties.

Briefly, wastewaters generated from the production of this group of pesticides are:

Excess prill tower dust scrubber water
Centrate from liquid/solid separation step
Vent gas scrubber waters
Reactor and processing unit cleanout wastewaters
Processing area washdown wastes

Aldrin-Toxaphene Group

The insecticides of this group, except for Toxaphene and Strobane which are discussed below, are polychlorinated cyclic hydrocarbons with endomethylene-bridged structures, prepared by the Diels-Alder diene reaction. The development of these materials resulted from the 1945 discovery of chlordane, the chlorinated product of hexachlorocyclopentadiene and cyclopentadiene. Figure IVC-4, a simplified process flow diagram for this type of pesticide, illustrates the potential sources of wastewater in this process.

Cyclopentadiene, produced by cracking naphtha, is chlorinated to yield hexachlorocyclopentadiene (CPD), the raw material basic to the chemistry of this group of pesticides. Cyclopentadiene and various vinyl organic compounds can be combined with CPD in the Diels-Alder reactor.

Certain pesticides in this group can be epoxidized with hydrogen peroxide or peracids to produce a second generation of pesticide compounds.

Toxaphene and Strobane are members of a group of incompletely characterized broad-spectrum insecticidal compounds produced by the chlorination of naturally occurring terpenes. They are insoluble in water and generally have long residual effects. These compounds, however, are unstable in the presence of alkali, upon prolonged exposure to sunlight, and at temperatures above 155°C, liberating hydrogen chloride.

FIGURE IVC-4

GENERAL PROCESS FLOW DIAGRAM FOR ALDRIN-TOXAPHENE PRODUCTION FACILITIES

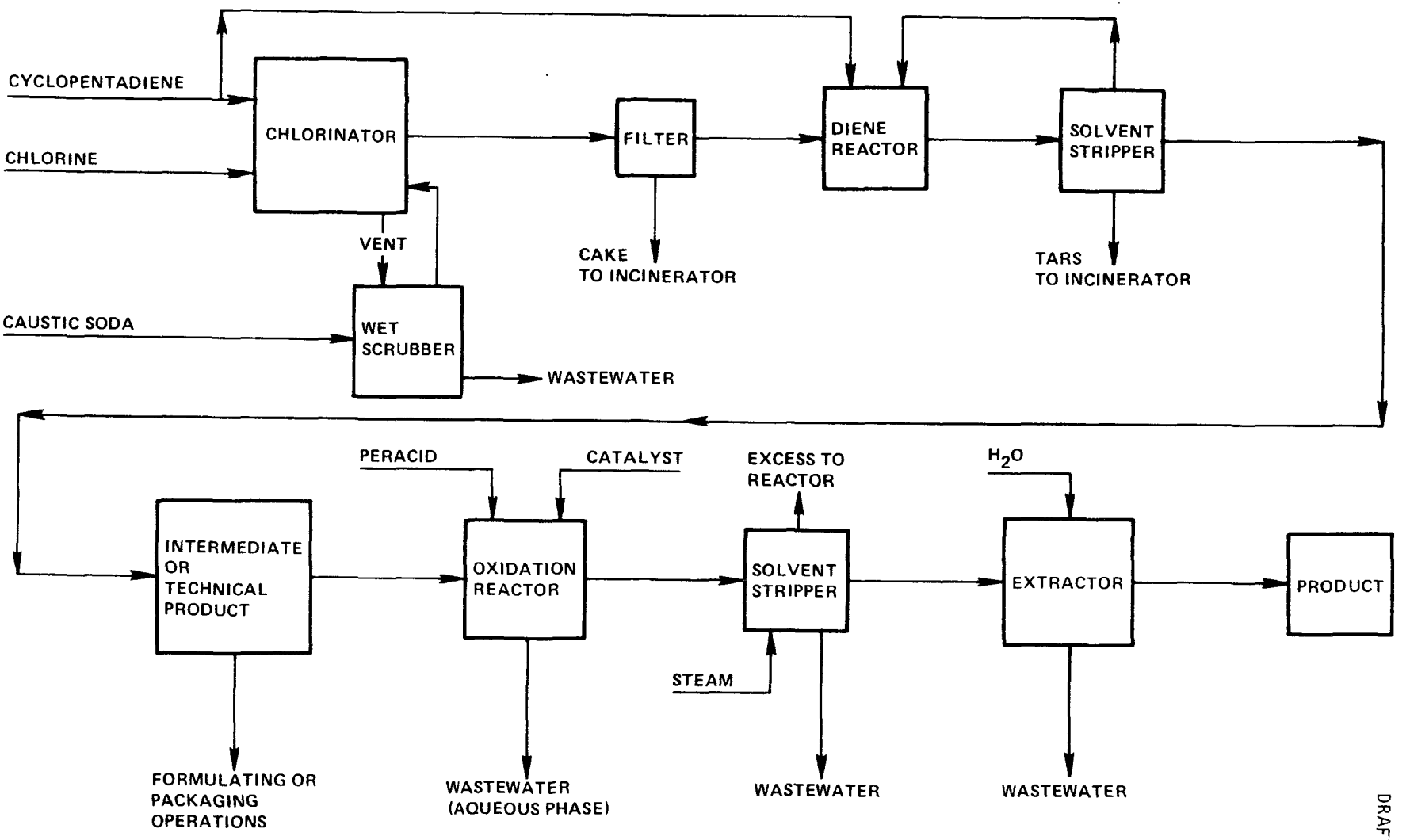

DRAFT

Wastewater generated in the production of this family of pesticides are:

- Vent gas scrubber water from caustic soda scrubber
- Aqueous phase from the epoxidation step
- Wastewater from the water wash and product purification units
- Periodic equipment cleaning wastewater
- General housekeeping

Tars and off-specification products require incineration.

Halogenated Aliphatic Hydrocarbons

This group includes chlorinated aliphatic acids and their salts (e.g., TCA, Dalapon, and Senac) herbicides, halogenated hydrocarbons fumigants (e.g., methyl bromide, carbon tetrachloride, DDT, DBCP, and EDB), and the insecticide Lindane. Figures IVC-5 and IVC-6 represent simplified process flow diagrams for the production of halogenated aliphatics and halogenated aliphatic acid pesticides. Potential wastewater sources are illustrated.

Chlorinated aliphatic acids can be prepared by nitric acid oxidation of chloral (TCA), or by direct chlorination of the acid. The acids can be sold as mono- or di-chloro acids, or neutralized to an aqueous solution with caustic soda. The neutralized solution is generally fed to a dryer from which the powdered product is packaged.

Wastewaters potentially produced during the manufacture of pesticides in this group are:

- Condensate from steam jets
- Acidic wastewater from fractionation units
- Cooler blowdown water
- Excess mother liquor from centrifuges
- Vent gas scrubber water from caustic soda scrubber
- Aqueous phase from decanter units
- Scrubber water from dryer units
- Wash water from equipment cleanout
- Process area clean up wastes

Phosphorus-Containing Pesticides

The commercial organo-phosphorus pesticides, composed of phosphates, phosphonates, phosphorothioates, phosphorodithioates, and phosphorus-nitrogen compounds, account for about 95 percent of the phosphorus-containing pesticides produced today.

FIGURE IVC-5

GENERAL PROCESS FLOW DIAGRAM FOR HALOGENATED ALIPHATIC HYDROCARBON PRODUCTION FACILITIES

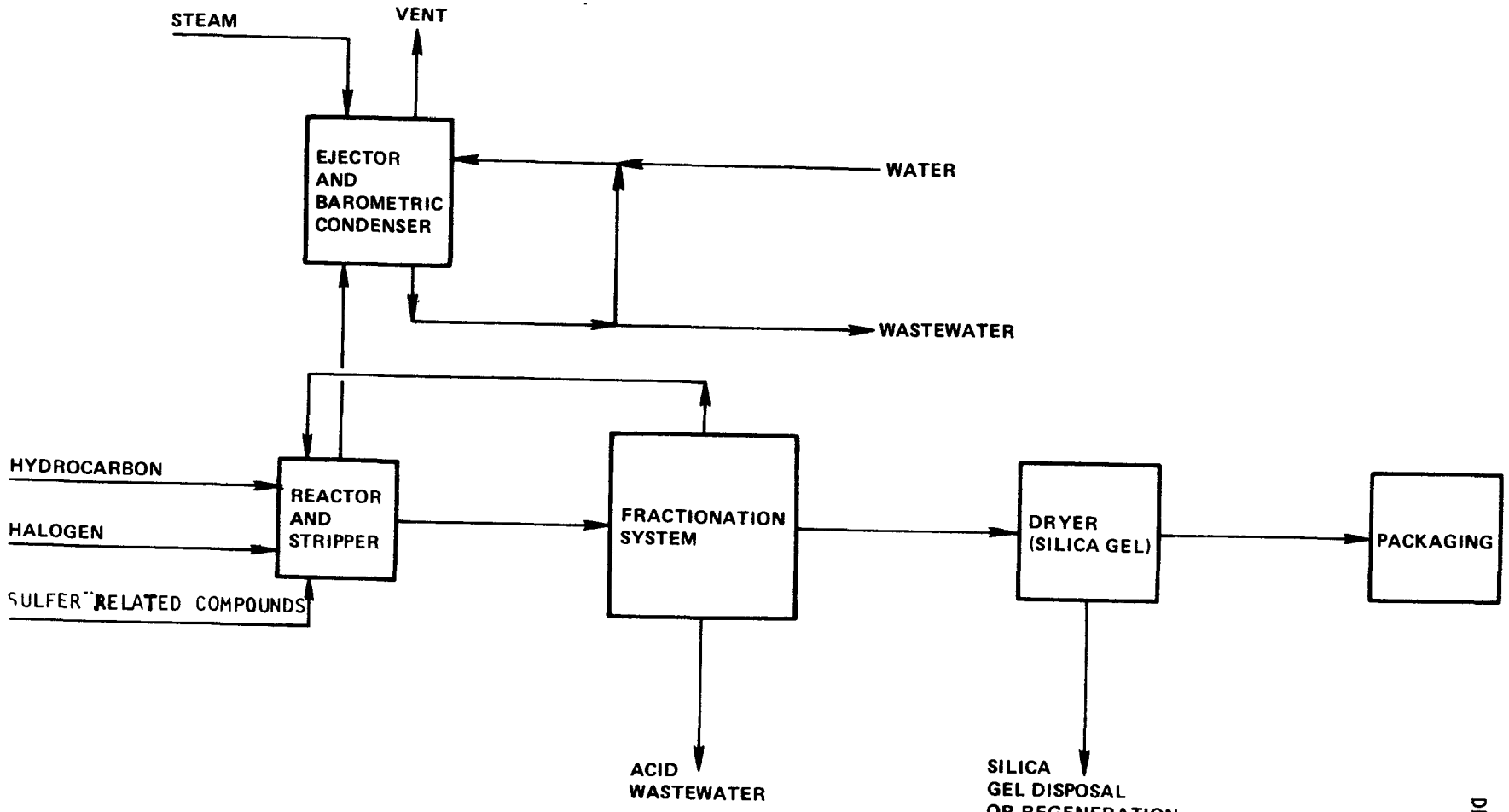

*SULFER RELATED COMPOUNDS IS A RAW MATERIAL FOR PRODUCTS

DRAFT

FIGURE IVC-6

GENERAL PROCESS FLOW DIAGRAM FOR HALOGENATED ALIPHATIC ACID PRODUCTION FACILITIES

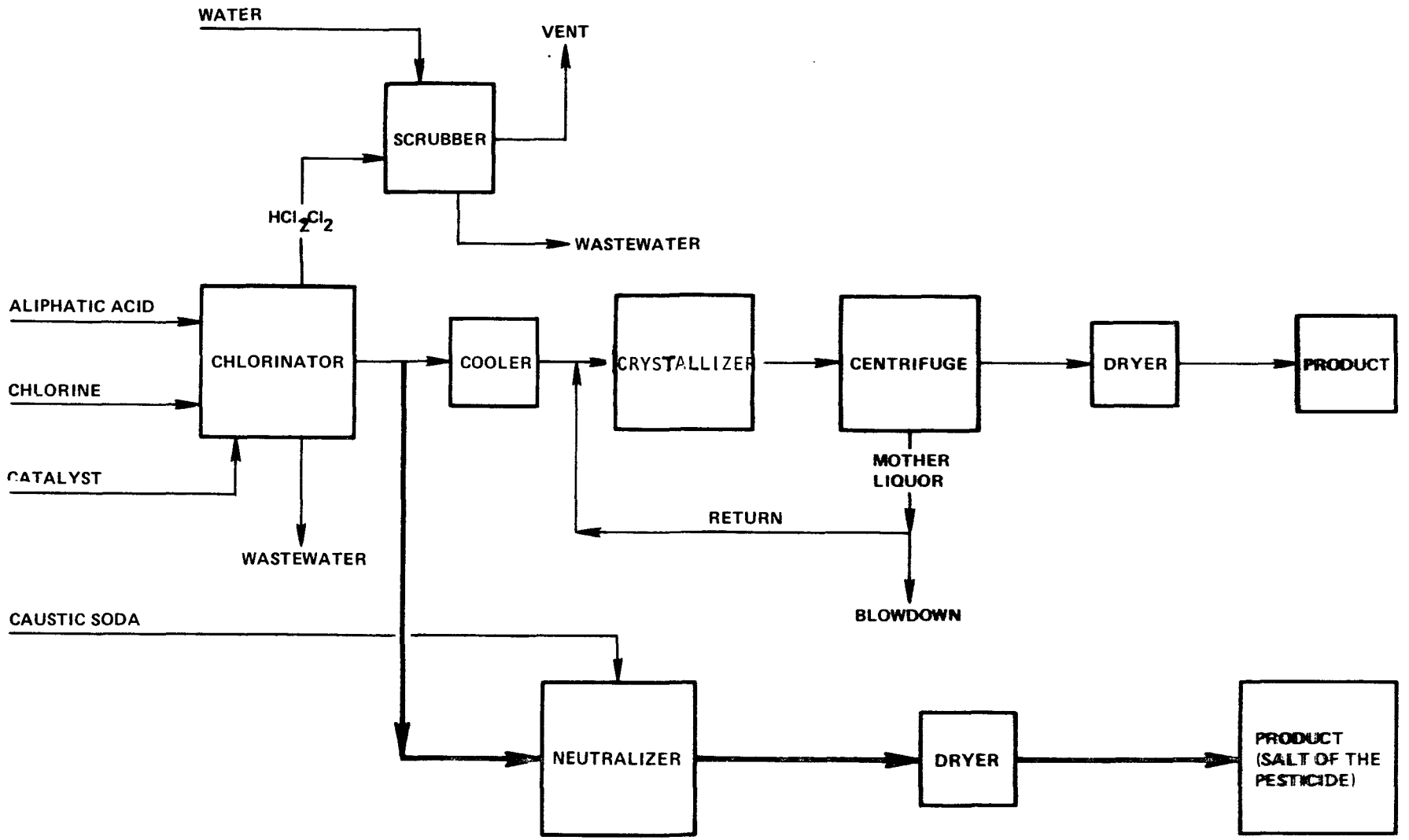

DRAFT

Seven of the 10 most popular organo-phosphates start with the preparation of a phosphite triester ($P(OR)_3$) which can be readily oxidized to the respective phosphates, but are more commonly reacted with a ketone or aldehyde having an alpha-carbon halide. The product thus formed is a phosphate with an unsaturated aliphatic grouping. These compounds can then be halogenated across the double bond to form yet another compound with pesticidal properties.

Phosphates and Phosphonates

Figure IV-7 is a simplified process flow diagram of phosphite triester production showing potential wastewater sources.

In the manufacture of the phosphite triester, an alcohol and phosphorus trichloride is fed to a reactor using a base (for example, sodium carbonate) to produce the crude product, with hydrogen chloride as a by-product. The phosphite triester is then reacted with a chloroketone or chloraldehyde in a reactor/stripper vessel. Light-ends are continuously removed under vacuum. The condensible fraction containing the by-product alkyl halide can be recovered but is generally wasted. Noncondensibles captured in the steam condensate go to treatment.

The technical-grade intermediate dissolved in an inert solvent is then halogenated. After halogenation in a batch reactor/stripper, the vented gas is scrubbed with a solution of caustic soda. This wastewater goes to treatment. Then under reduced pressure, the solvent is removed, condensed and recycled back to the reactor. Condensate from the steam jet system is collected for treatment.

Generally, the ketone or aldehyde is manufactured on-site, and these wastes usually become part of the "pesticide" process wastes.

Phosphorothioates and Phosphonothioates

This family of pesticides include the parathions, malathion, ronnel, diazinon, Guthion, Dasanit, disulfoton, dimethoate, chlopyrifos, ethion, Folex, and carbophenothion, each of which is produced in greater than one million pounds quantity annually.

Figure IVC-8 is a generalized process and waste flow diagram for this group of compounds. In the first step, phosphorus pentasulfide (P_2S_5) is reacted with an alcohol (generally in a solvent) to form the dialkyl phosphorodithioic acid (dithio acid). This is an anhydrous reaction.

The dithio acid can then be: (1) converted to a dithio salt, (2) chlorinated to the dialkyl phosphorochloridothionate (DAPCT), or (3) reacted, as the dithio acid with an aldehyde or an alkene to form a desired intermediate or product.

FIGURE IVC-7

GENERAL PROCESS FLOW DIAGRAM FOR PHOSPHATES AND PHOSPHONATES PESTICIDE PRODUCTION FACILITIES

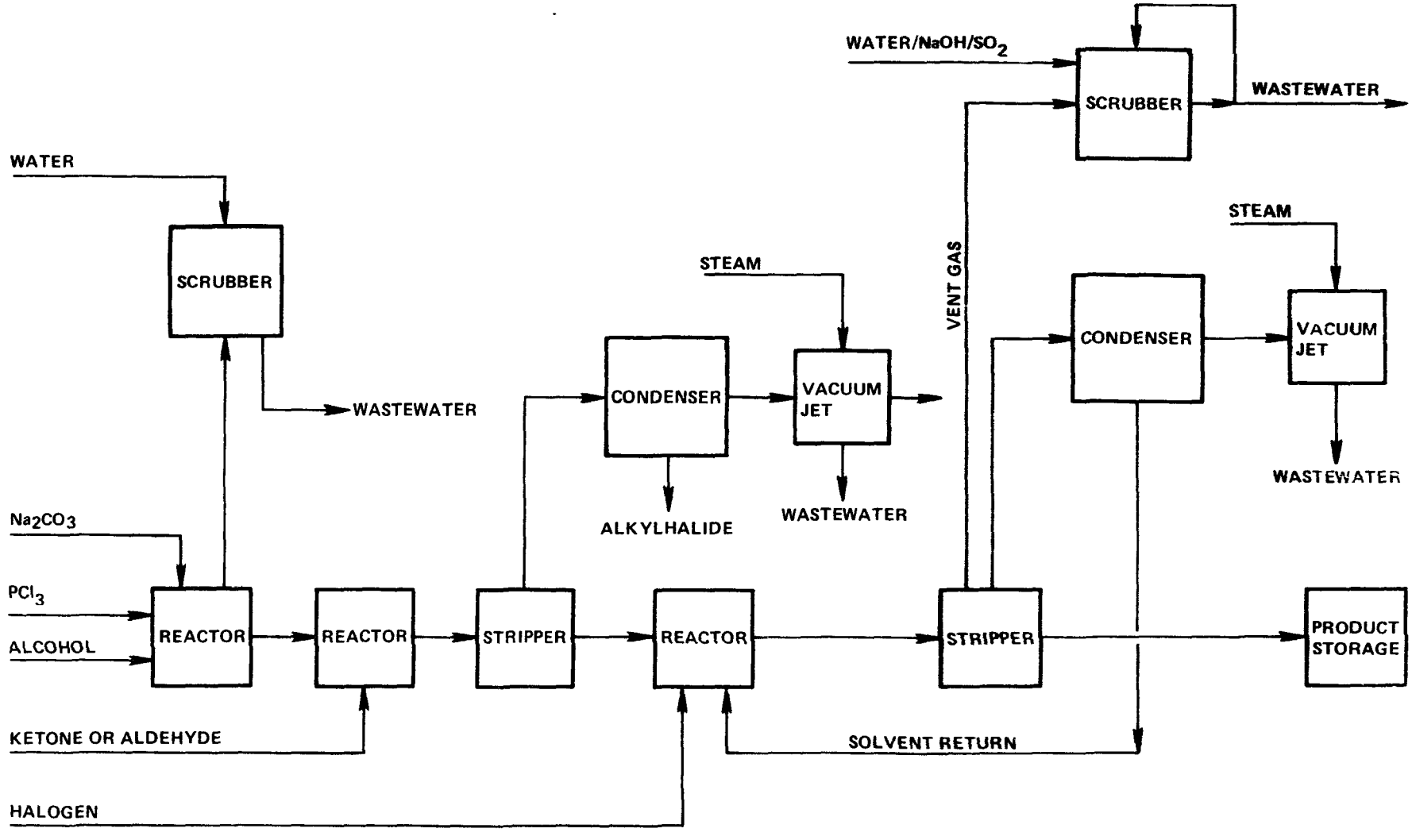

DRAFT

FIGURE IVC-8

GENERAL PROCESS FLOW DIAGRAM FOR PHOSPHOROTHIOATE AND PHOSPHORODITHIOATE PRODUCTION FACILITIES

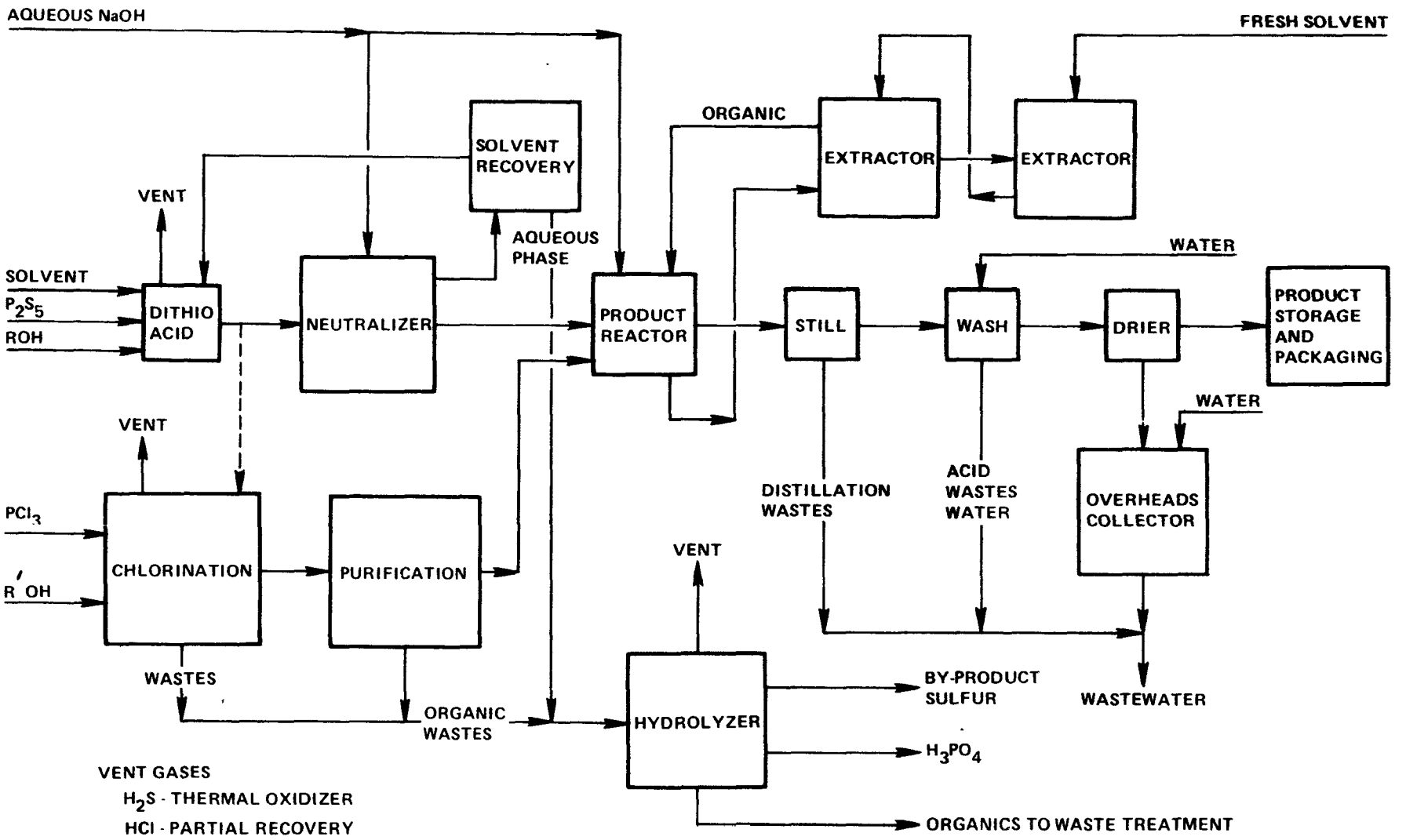

DRAFT

Using the production of the dithio salt as an example, caustic soda is added to the dithio acid in a separate reactor to produce the dithio salt. The dithio salt in the aqueous phase is separated to be used in the next reaction step. The organic phase serves to remove residuals, namely unreacted triester. Solvent is recovered and returned to the dithio acid unit. Wastes from the solvent recovery step are sent to treatment.

The dithio acid can also be chlorinated to produce a phosphorchloridothionate (PCT) which can combine with the dithio salt in a condensation step. The crude PCT can be purified by distillation. Distillation residues are hydrolyzed, yielding sulfur and phosphoric acid as by-products. Organic wastes require treatment.

The dithio acid can be further reacted with an aldehyde or alkene under slightly acidic conditions in a batch process. Caustic soda is added to maintain the correct pH. In a recovery system, product is recovered, water washed, and then air dried. The recovery step wastes include distillation wastes and solids (filter cake). Acid wastewater from the wash step is combined with scrubber water from the overhead drier. These wastewaters constitute the major portion of the process waste stream.

Process wastewater can be detoxified (alkaline hydrolysis at elevated temperatures) before combining with other plant waste streams.

In summary, the following wastewaters are generated during the production of organo-phosphorus compounds:

- Hydrolyzer wastewater
- Aqueous phase from product reactors
- Wash water from product purification steps
- Aqueous phase from solvent extractor
- Wastewater from overhead collectors and caustic soda vent gas scrubbers
- Reactor and process equipment cleanout wastes
- Area washdowns

Organo-Nitrogen Processes

The nitrogenous pesticides include the greatest number of chemical types, broadest raw material base, as well as the most diverse process schemes. Product and process types to be described are the aryl- and alkylcarbamates, thiocarbamates, amides and amines, ureas and uracils, triazines, and the nitroaromatics.

Aryl and Alkyl Carbamates and Related Compounds

The carbamates in this grouping include carbaryl, carbofuran, chloropropham, BUX, aldicarb and propoxur. A generalized production flow

diagram is shown in Figure IVC-9 together with the principal wastewater sources.

In general, carbamates are synthesized in a combination of batch and continuous processes. Wastes include liquid streams, vents and some heavy residues. Potentially toxic wastewaters require detoxification (via alkaline hydrolysis) before being sent to the general plant treatment system. Vents are flared, or pass through a caustic scrubber. Heavy residue requires incineration.

Wastewaters associated with the production of these compounds are:

- Brine process wastewater from reactors
- Wastewater from the caustic soda scrubbers
- Aqueous phase wasted following the isocyanate reaction
- Reactor cleanout washwater
- Area washdowns

Thiocarbamates

This family of pesticides include Eptam, butylate, vernolate, pebulate and EPTC. In a series of semi-continuous and batch operations, as shown in Figure IVC-10, phosgene is reacted with an amine to give a carbamoyl chloride. Reaction of the carbamoyl chloride with a mercaptan gives the corresponding thiocarbamate.

Alternately, the amine can be reacted with an alkyl chlorothiolformate to yield the thiocarbamate. Thiocarbamates are generally volatile compounds. Therefore, these products can be distilled.

Acidic process wastewater from the first reactor are combined with the brine wastes from the second reactor along with vent gas scrubber water before treatment. Still bottoms are generally incincerated. Liquid wastes are biodegradable, especially following acid or alkaline hydrolysis at elevated temperatures.

In summary, the production of thiocarbamates will generate the following wastewaters:

- Acid wastewater from the initial reaction step
- Brine from the second reaction step
- Wastewater from caustic soda scrubbers
- Kettle clean-out wash waters
- Area washdowns

FIGURE IVC-9

GENERAL PROCESS FLOW DIAGRAM FOR ARYL AND ALKYL CARBAMATE PRODUCTION FACILITIES

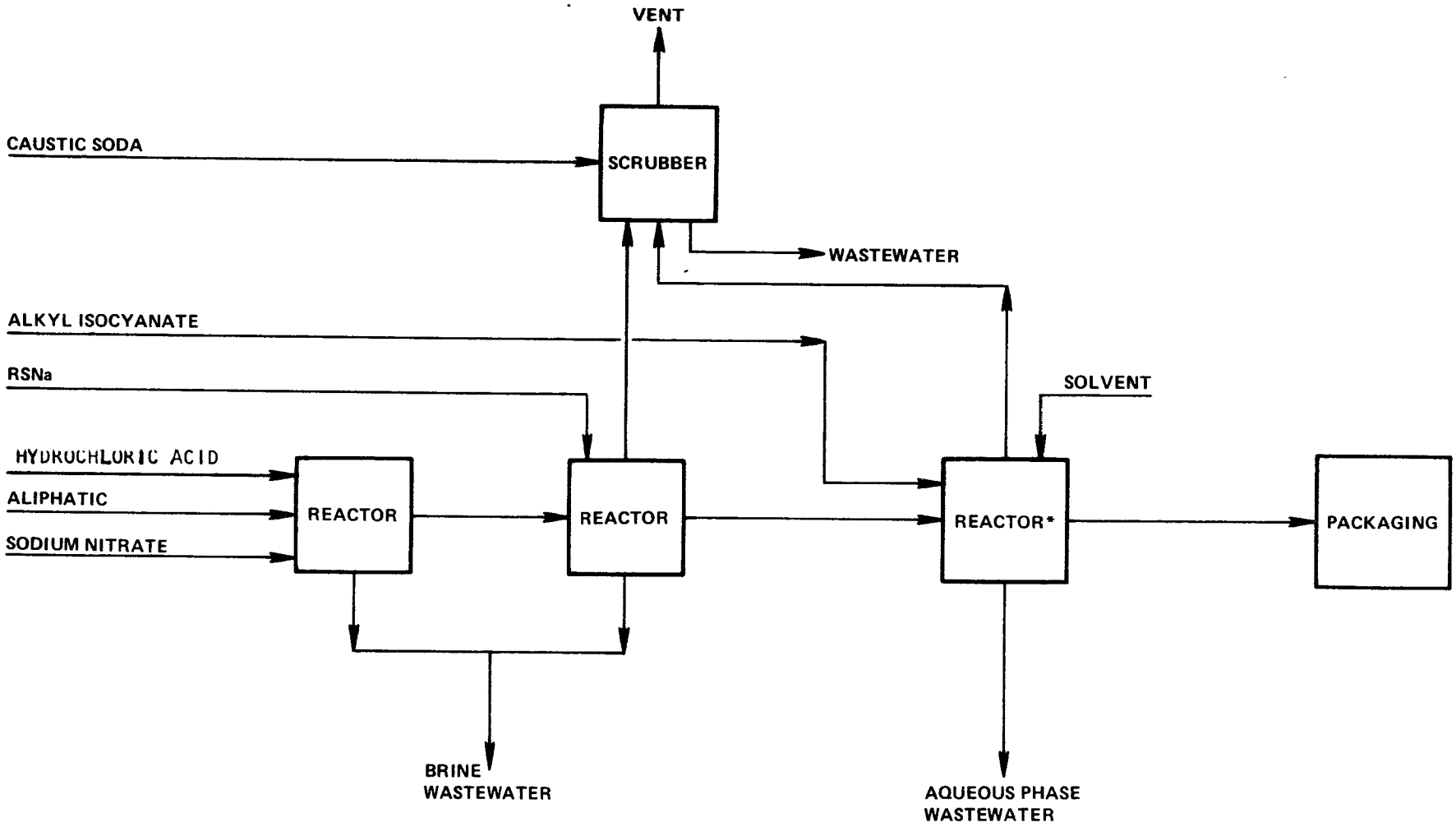

*ALTERNATIVE RAW MATERIALS TO THIS REACTOR CAN BE AN AROMATIC-OH COMPOUND PLUS AN ALKYL ISOCYANATE

DRAFT

FIGURE IVC-10

GENERAL PROCESS FLOW DIAGRAM FOR
THIOCARBAMATE PRODUCT FACILITIES

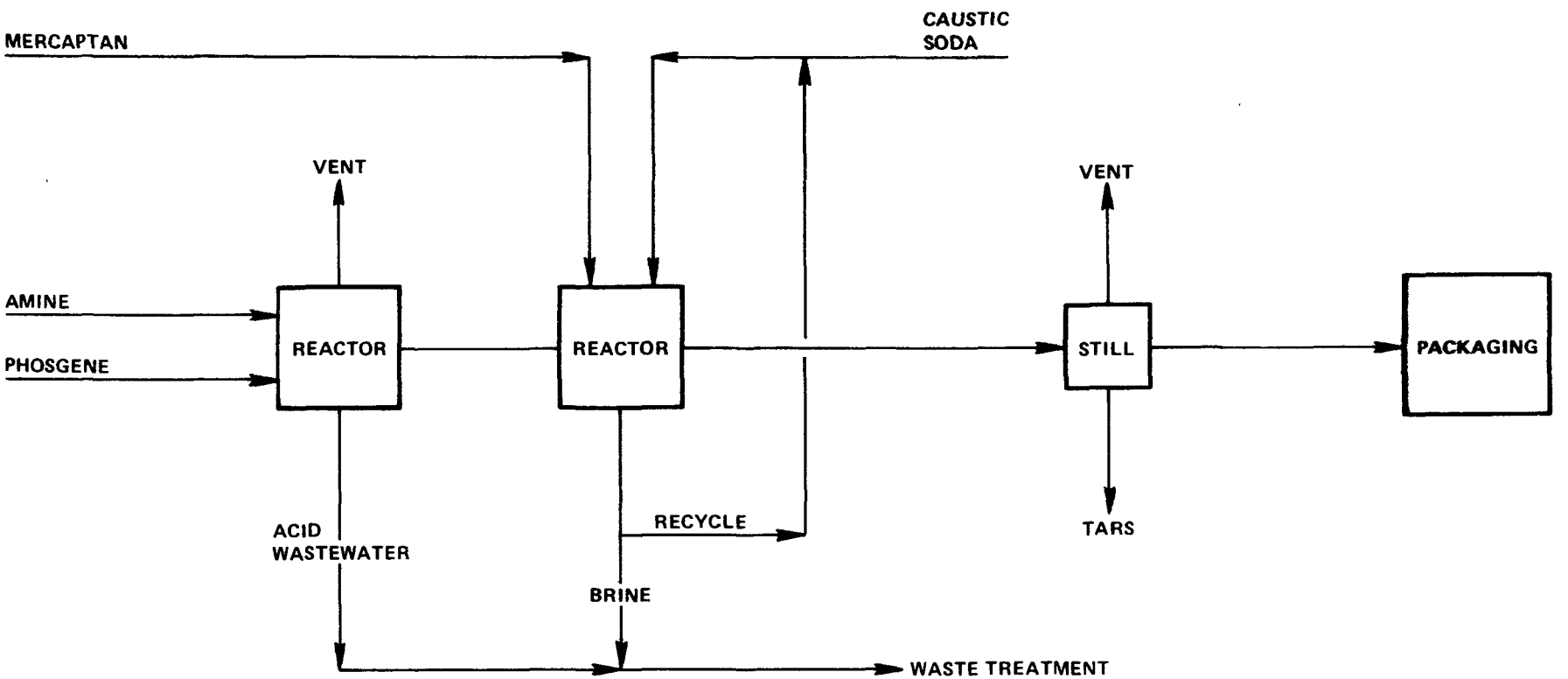

DRAFT

Amides and Amines
(without sulfur)

Compounds in this group include Deet, naptalam, CDAA, propachlor, alachlor, propanil and diphenamid, each of which has been produced at greater than one million pounds per year. Typically, these herbicides include two major groups: herbicides based on substituted anilide structures and chloroacetamide derivatives.

A generalized process flow diagram, indicating wastewater sources, is presented in Figure IVC-11. Briefly, the process is based on the reaction of an acid chloride with a suitable amine. Generally, the amine is prepared within the same plant. Wastewater from the preparation of amine can be included in the raw waste load for the production of these pesticides. Such wastewaters are generated from the intermediate product separation and purification steps. If the acid chloride is also prepared on-site, then acidic process wastewater from the purification step vent gas scrubbers should be considered part of the overall pesticide raw waste loas.

In summary, wastewaters resulting from the production of the amide and amine group of pesticides are:

Aqueous fractions from reactors
Wastewater from purification steps
Vacuum jet condensate
Wastewater removed in purification step
Water from washing steps
Kettle cleanout wastes
Area washdown

Ureas and Uracils

Pesticides in this group include diuron, fluometuron, linuron and norea urea compounds and the herbicide bromacil, each of which has a production level in excess of one million pounds per year.

The production of monuron is typical of the general process used to manufacture this family of pesticides. Figure IVC-12 shows the generalized process flow diagram and wastewater sources associated with the production process. Reaction of para-chloroaniline in dioxane or another inert solvent with anhydrous hydrogen chloride and phosgene generates para-chlorophenyl isocyanate, which then can be reacted with dimethylamine to yield monuron. Another commercial process involves the reaction of an aniline and urea in alcohol or phenol solevent to generate the phenyl isocyanate, which is further reacted with an appropriate amine. The ureas are generally insoluble in the inert solvent and precipitate out. The inert solvent can be flash-distilled and recycled to the reactor. Aqueous hydrochloric acid is added to the crude product to remove insoluble components. The product is then water washed in a precipitator to yield the final product.

FIGURE IVC-11

GENERAL PROCESS FLOW DIAGRAM FOR
AMIDE AND AMINE PRODUCTION FACILITIES

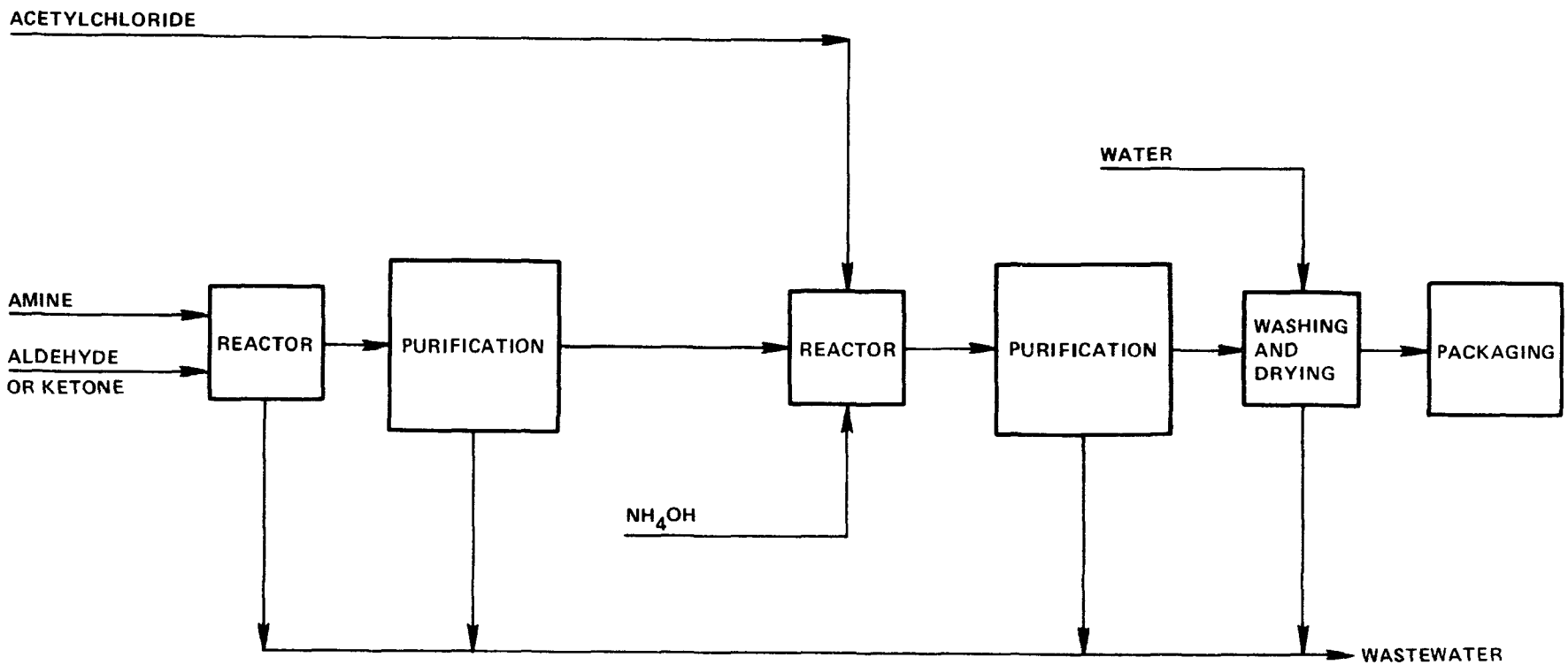

DRAFT

FIGURE IVC-12

GENERAL PROCESS FLOW DIAGRAM FOR UREA AND URACILS PRODUCTION FACILITIES

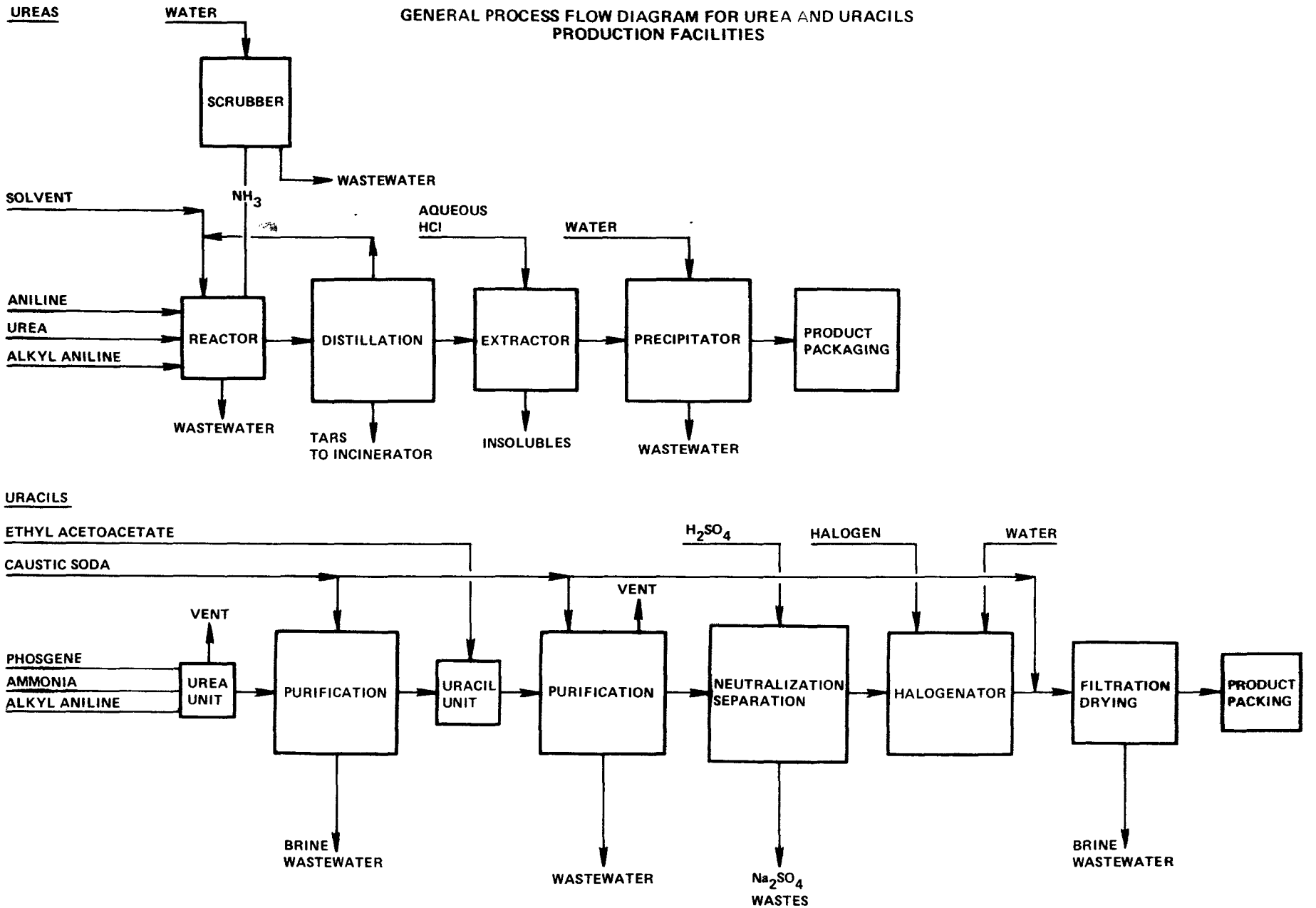

Uracils are a relatively new class of herbicides whose group is growing. The process illustrated in Figure IVC-12 is as follows: An alkylamine, phosgene, and ammonia are reacted to yield an alkyl urea. Following a caustic wash purification step, the alkyl urea is then reacted with an alkyl acetoacetate, caustic washed and neutralized with sulfuric acid. The uracil can then be halogenated (commonly with bromine), filtered, dried and finally packaged.

No solid wastes are generated and no significant quantities of chemicals are recycled. Liquid wastes from the purification, neutralization and filtration steps require treatment via either biological oxidation or incineration technologies.

In summary, wastewaters generated in the manufacture of urea and uracil pesticides can be as follows:

Aqueous wastes from precipitator (Urea)
Scrubber waters (Urea and Uracil)
Brine from purification steps (Uracil)
Aqueous sodium sulphate from neutralization and intermediate product separations (Uracil)
Brine from filtration
Reactor wash water (Urea and Uracil)
Production area washdowns (Urea and Uracil)

s-Triazines

The herbicidal value of derivatives of s-triazine has been a recent discovery. Atrazine leads all other herbicides in the U. S. in volume of usage. It has an unusually large margin of selectivity for corn, this country's leading field crop.

The starting material for the production of the s-triazines is cyanuric chloride. It is obtained industrially by trimerization of cyanogen chloride. A generalized process flow diagram showing potential wastewater sources is presented in Figure IVC-13. One chlorine atom is replaced by an amine, phenol, alcohol, mercaptan, thiophenol or a related compound under controlled reaction conditions. Hydrogen chloride and hydrogen cyanide gases are evolved and are vented. The gases pass through a caustic soda scrubber, and the resulting scrubber wastewater requires treatment.

Amination of the cyanuric chloride, as depicted in Figure IVC-13 requires one to three steps in a continuous process. Solvent can be recovered and recycled to the process. The liquid wastes are combined with the caustic scrubber waters prior to combined treatment.

FIGURE IVC-13

GENERAL PROCESS FLOW DIAGRAM FOR S-TRIAZINE PRODUCTION FACILITIES

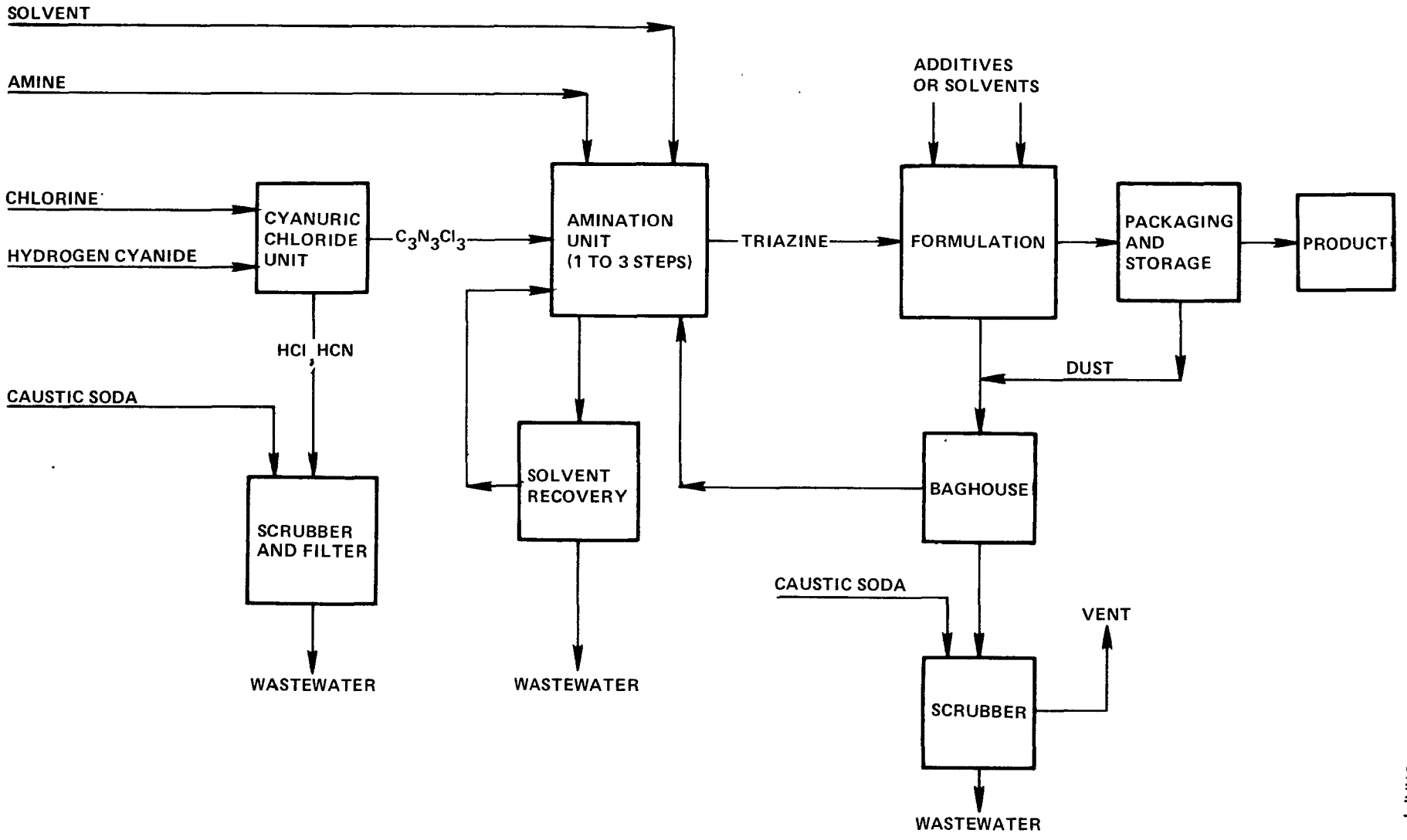

DRAFT

Dust generated in formulation and packaging is collected in a baghouse and then returned to process. Vapors are caustic scrubbed and combined with other process waste streams.

In summary, wastewaters generated in the production of triazine herbicides generally come from the following sources:

- Caustic soda scrubbing and filtration of vented HCl and HCN gases
- Aqueous wastes from the solvent recovery unit
- Scrubber water from the air pollution control equipment used in formulation areas
- Production area washdowns
- Reactor clean-out wash waters

Nitro Compounds

This family of organo-nitrogen pesticides include the nitro phenols (and their salts), for example, dinoseb, and the substituted dinitroanilines, trifluralin and nitralin, each of which amounts to more than one million pounds annually of active ingredients.

An example of a typical commercial process for the production of a dinitroaniline herbicide is illustrated in Figure IVC-14. In this example, a chloroaromatic is charged to a nitrator with cycle acid and fuming nitric acid. The crude product is then cooled to settle out spent acid, which can be recovered and recycled. Oxides of nitrogen are vented and caustic scrubbed. The mono-nitrated product is then charged continuously to another nitrater containing 100 percent sulfuric acid and fuming nitric acid at an elevated temperature.

The dinitro product is then cooled, filtered (the spent acid liquor is recoverable), the cake is washed with water, and the resulting wash water is sent to waste.

The dinitro compound is then dissolved in an appropriate solvent and then added to the amination reactor with water and soda ash. An amine is then reacted with the dinitro compound. The crude product is passed through a filter press and decanter and finally vacuum distilled. The salt-water layer from the decanter is discharged for treatment. The solvent fraction can be recycled to the reactor. Vacuum exhausts are caustic scrubbed. Still bottoms are generally incinerated.

In summary, wastewaters generated during the production of the nitro family of pesticides are:

FIGURE IVC-14

GENERAL PROCESS FLOW DIAGRAM FOR NITRO-TYPE PESTICIDES

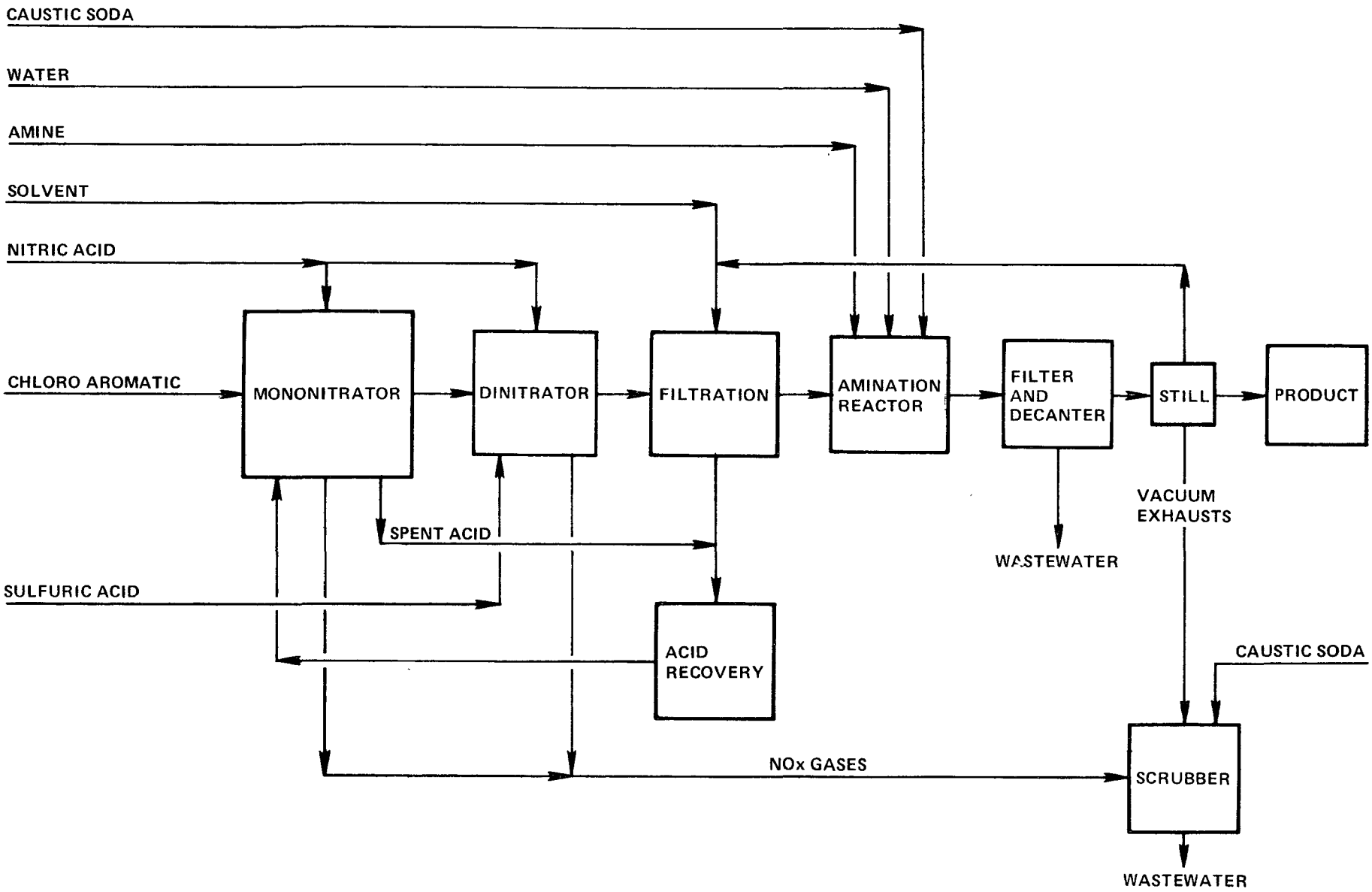

DRAFT

Aqueous wastes from the filter and decanting system
Distillation vacuum exhaust scrubber wastes
Caustic scrubber wastewaters
Periodic kettle cleanout wastes
Production area washdowns

Metallo-Organic Pesticides

The metallo-organic group of pesticides includes principally the organic arsenicals and the dithiocarbamate metal complexes. A discussion of their manufacture and wastewater sources is applicable to the production of other compounds in this group.

MSMA is the most widely produced of the group of organo-arsenic herbicides (estimated production in 1972 was 24 million pounds), that also includes the octyl- and docecyl-ammonium salts, the disodium salt (DSMA), and cacodylic acid (dimethylarsenic acid). The DSMA can apparently serve as an intermediate in the manufacture of all the others.

The process is described by the production and waste schematic flow diagram presented in Figure IVC-15.

The first step of the process is performed in a separate, dedicated building. The drums of arsenic tri-oxide are opened in an air-evacuated chamber and automatically dumped into 50 percent caustic soda. A dust collection system is employed. The drums are carefully washed with water; the wash water is added to the reaction mixture; the drums are crushed and sold as scrap metal. The intermediate sodium arsenite is obtained as a 25 percent solution and is stored in large tanks prior to further reaction. In the next step, the 25 percent sodium arsenite is treated with methyl chloride to give the disodium salt, DSMA. DSMA can be sold as a herbicide; however, it is more generally converted to the monosodium arsenate, MSMA, which has more favorable application properties.

In order to obtain MSMA, the solution is partially acidified with sulfuric acid and the resulting solution concentrated by evaporation. As the aqueous solution is being concentrated, a mixture of sodium sulfate and sodium chloride precipitates out, about 0.5 pound per 100 pounds of active ingredient. These salts, a troublesome disposal problem because they are contaminated with arsenic, are removed by centrifugation, washed in a multi-stage, counter-current washing cycle, and then disposed of in a State-approved landfill.

Methanol, a side product of methyl chloride hydrolysis, can be recovered. In addition, recovered water is recycled.

FIGURE IVC-15

GENERAL PROCESS FLOW DIAGRAM FOR ARSENIC-TYPE METALLO-ORGANIC PRODUCTION

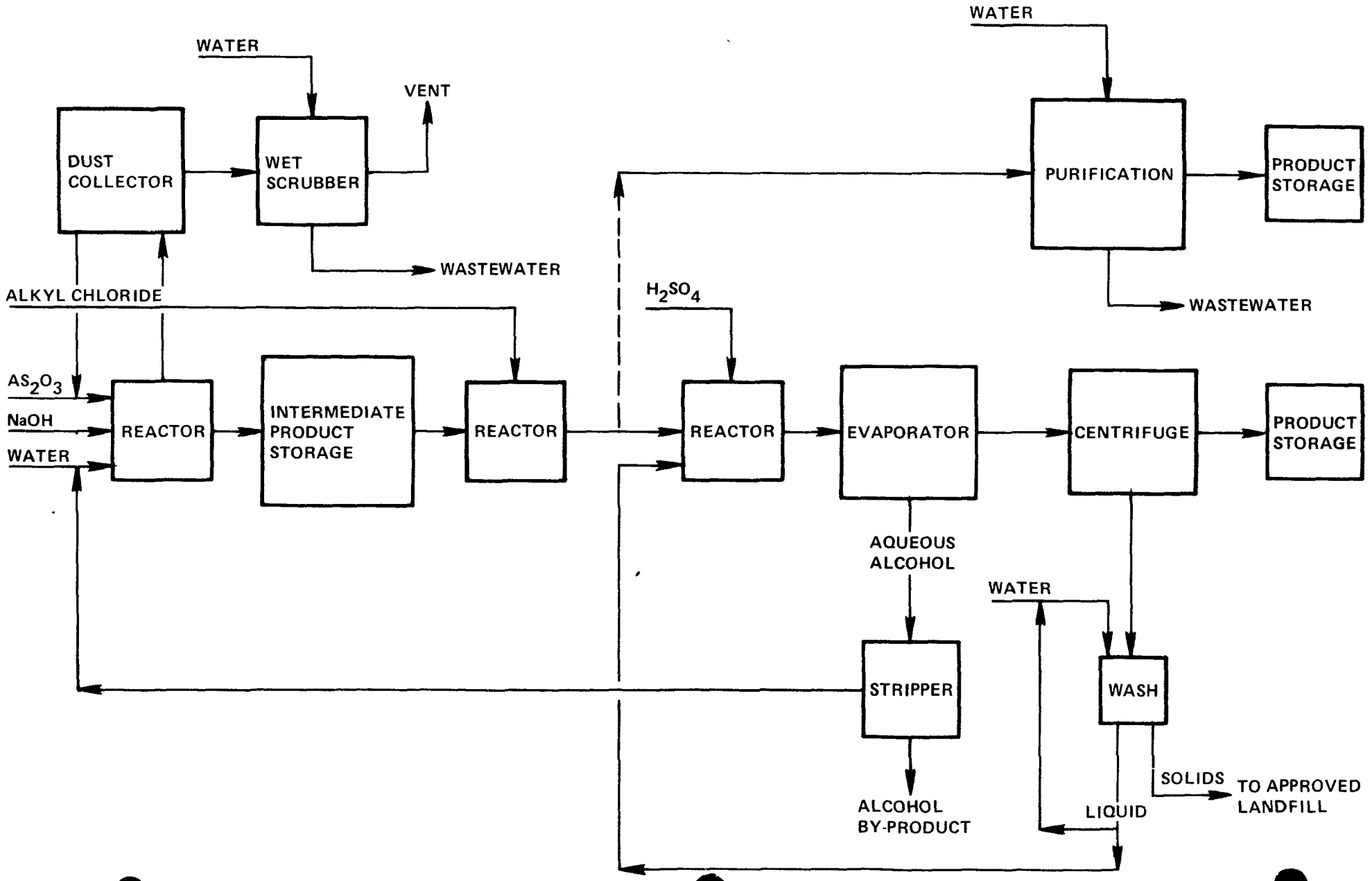

The products are formulated on site as solutions (for example 48 percent (6 lb A.I./gal) and 58 percent (8 lb A.I./gal)) and shipped in 1 to 30-gallon containers.

Figure IVC-16 is a typical process and waste generation schematic flow diagram for the production of ethylene bisdithiocarbamate metal complexes. Raw materials include carbon disulfide, ethylene diamine and sodium hydroxide (50 percent). These materials are first reacted in stainless steel, cooled vessel. The exothermic reaction is controlled by the feed rate. Excess carbon disulfide is distilled out, collected and eventually recycled to the reactor. The sodium hydroxide addition controls pH. The resulting concentrated nabam intermediate solution is reacted (within 24 hours) with a sulfate, and the desired metal organic complex is precipitated. The slurry is water washed to remove sodium sulfate and then dried to less than 1 percent water content. Process by-products include sodium sulfate and small amounts of carbon disulfide and sodium hydroxide.

Air emissions are controlled by cyclone collectors, bag filters, and scrubbers. The small amount of hydrogen sulfide from process vents is caustic scrubbed before release to the atmosphere. A cyclone collector, bag filter and scrubber are used to remove particulates from air. The liquid waste streams contain primary salt.

In summary, wastewaters generated in the preparation of metallo-organics are from the following areas:

- Spillage from drum washing operations
- Washwater from product purification steps
- Scrub water from vent gas scrubber unit
- Process wastewater
- Area washdowns
- Equipment cleanout wastes

Formulators and Packagers

Pesticide formulations can be classified as liquids, granules, dusts and poweders. There are 92 major formulation plants according to this classification.

The scale on which pesticides are produced covers quite a range. Undoubtedly, many of the small firms having only one product registration produce only a few hundred pounds of formulated pesticides each year. At least one plant that operated in the range of 100,000,000 pound of formulated product per year has been identified. The bulk of pesticide formulations, however, is apparently produced by independent formulators operating in the 20,000,000 to 40,000,000 pounds per year range (C-4).

FIGURE IVC-16

GENERAL PROCESS FLOW DIAGRAM FOR CERTAIN DITHIOCARBAMATE METALLO-ORGANIC PRODUCTION

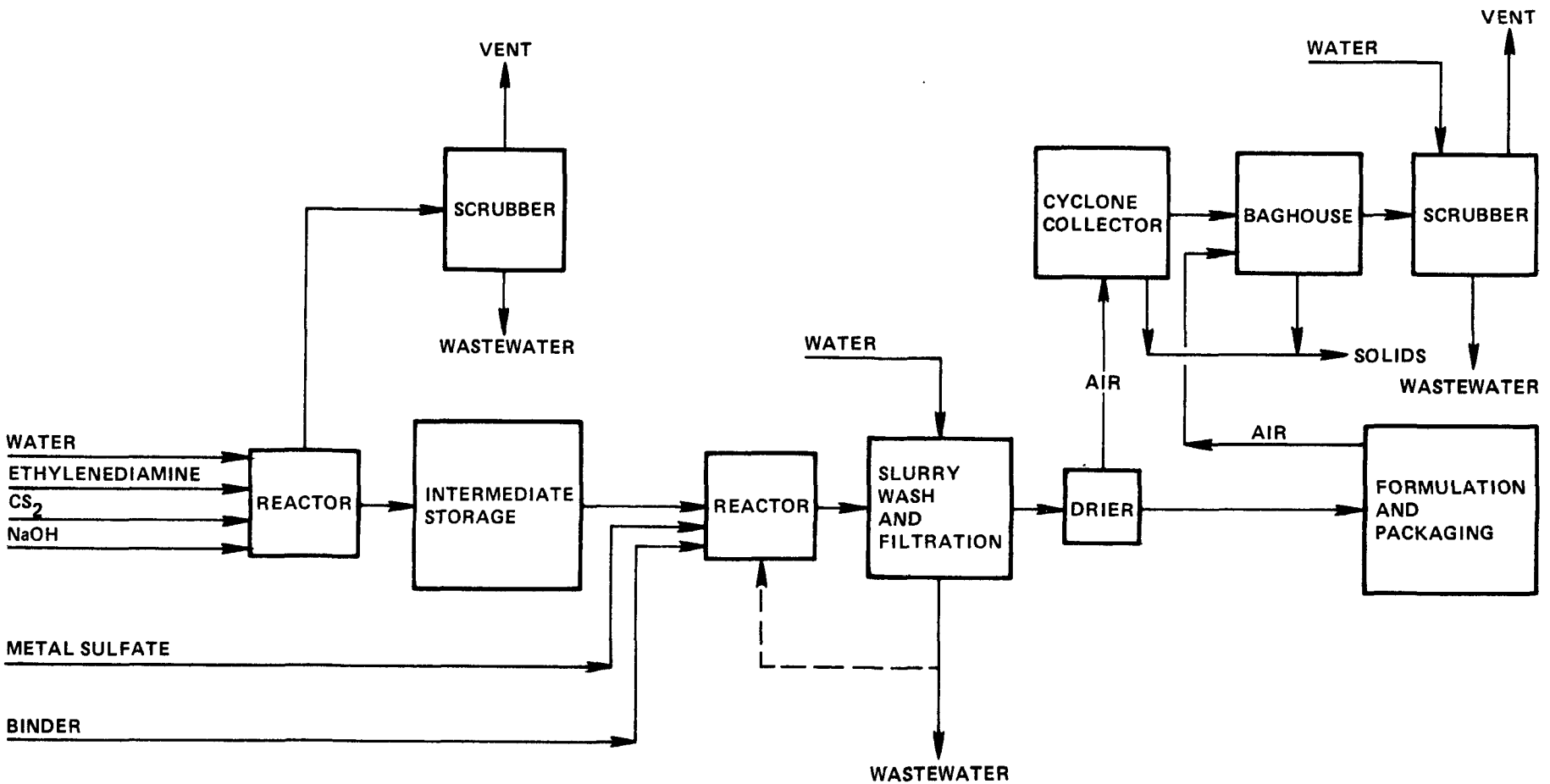

DRAFT

Formulation Processes

Most pesticides are formulated in mixing equipment that is used only to produce pesticide formulations. The most important unit operations involved are dry mixing and grinding of solids, dissolving solids, and blending. Formulation systems are virtually all batch mixing operations. Formulation units may be completely enclosed within a building, or may be out in the open, depending primarily on the geographical location of the plant.

Individual formulation units are normally not highly sophisticated systems. Rather, they are comparatively uncomplicated batch-blending systems that are designed to meet the requirements of a given company, location, rate of production, and available equipment. Production units representative of the liquid and solid formulation equipment in use are described in the following subsections.

Liquid Formulation Units: A typical liquid unit is depicted in Figure IVC-17. Technical pesticide is usually stored in its original shipping container in the warehouse section of the plant until it is needed. When technical material is received in bulk, however, it is transferred to holding tanks for storage.

Batch-mixing tanks are frequently open-top vessels with a standard agitator. The mix tank may or may not be equipped with a heating/cooling system. When solid technical material is to be used, a melt tank is required before this material is added to the mix tank. Solvents are normally stored in bulk tanks. The necessary quantity of an appropriate solvent is either metered into the mix tank, or determined by measuring the tank level. Necessary blending agents (emulsifiers, synergists, etc) are added directly from their original container to the mix tank. From the mix tank, the formulated material is frequently pumped to a hold tank before being put into containers for shipment. Before being packaged, many liquid formulations must be filtered by conventional cartridge filters or equivalent polishing filters.

Air pollution control equipment used on liquid formulation units typically involves an exhaust system at all potential sources of emission. Storage and holding tanks, mix tanks, and container-filling lines are normally provided with an exhaust connection or hood to remove any vapors. The exhaust from the system normally discharges to a scrubber system or to the atmosphere.

Dusts and Wettable Powders: Dusts and powders are manufactured by mixing the technical material with the appropriate inert carrier, and grinding this mixture to obtain the correct particle size. Mixing can be affected by a number of rotary or ribbon blender type mixers.

FIGURE IVC-17

LIQUID FORMULATION UNIT

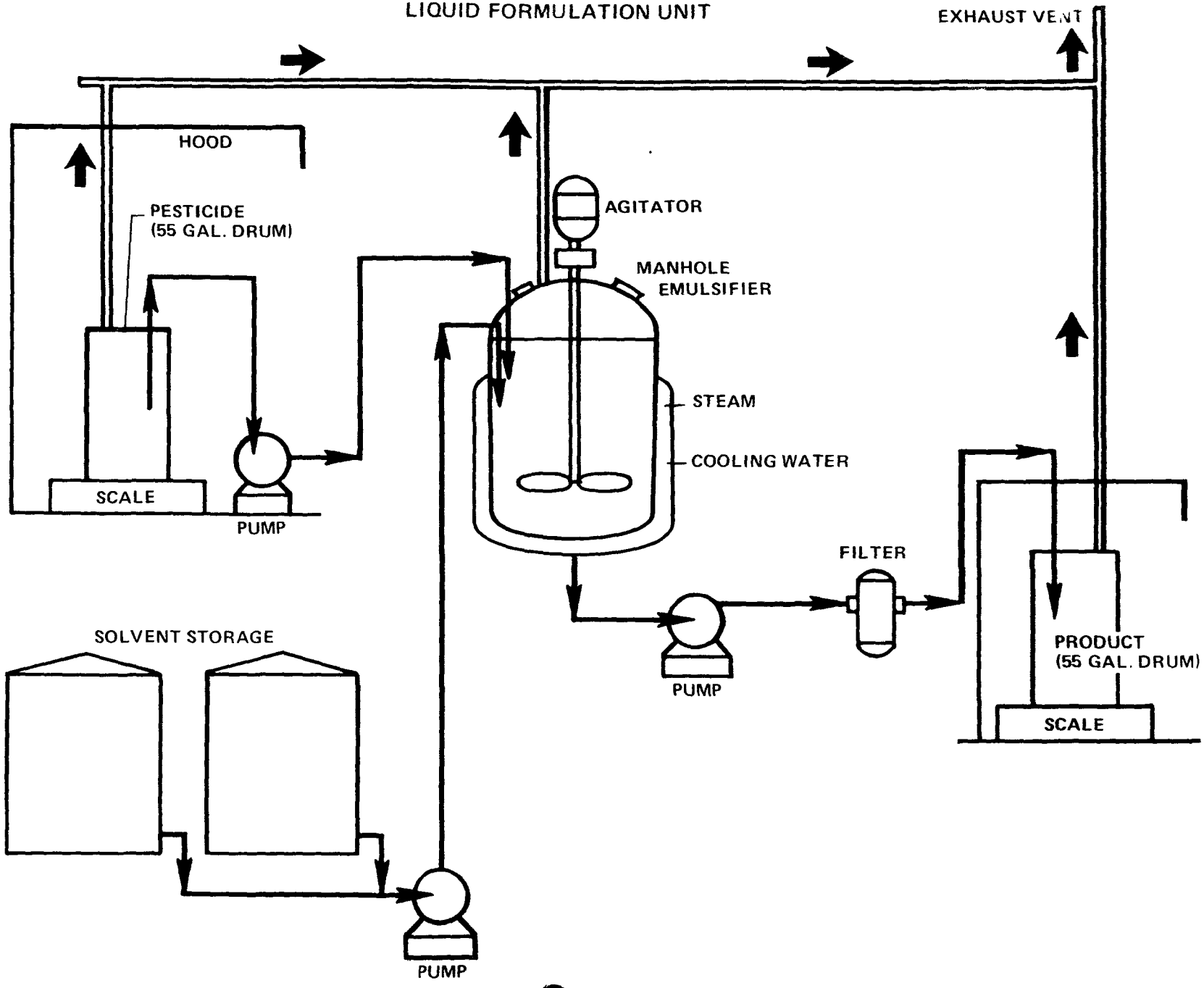

DRAFT

Air pollution control in dust formulation units is accomplished primarily by baghouse systems. In some plants, however, wet scrubbers are used. Discharges from these systems are usually low because the scrubbing water can be largely recirculated.

Granules: Granules are formulated in systems similar to the mixing sections of dust plants. The active ingredient is absorbed onto a sized, granular carrier such as clay or a botanical material. This is accomplished in various capacity mixers that generally resemble cement mixers.

If the technical material is a liquid, it can be sprayed directly onto the granules. Solid technical material is usually melted or dissolved in a solvent in order to provide adequate dispersion on the granules. The last step in the formulation process, prior to intermediate storage before packaging, is screening to remove fines.

Packaging and Storage: The last operation conducted at the formulation plant is packaging the finished pesticide into a marketable container. This is usually done in conventional filling and packaging units. Frequently, the same liquid filling line is used to fill products from several formulation units; the filling and packaging line is simply moved from one formulation unit to another. Packages of almost every size and type are used, including 1-, 2-, and 5-gallon cans, 30- and 55-gallon drums, glass bottles, bags, cartons, and plastic jugs.

On-site storage, as a general rule, is minimized. The storage facility is very often a building completely separate from the actual formulation and filling operation. In almost all cases, the storage area is at least located in a part of the building separate from the formulation units in order to avoid contamination and other problems. Technical material, except for bulk shipments, is usually stored in a special section of the product storage area.

In formulation and packaging plants, wastewaters can be potentially generated at several sources. These sources and operations are discussed in the following subsection.

Miscellaneous Plant Operations

For housekeeping purposes, most formulators clean out the buildings housing formulation units on a routine basis. Prior to washdown, as much dust, dirt, etc., as possible is swept and vacuumed up. The wastewater from the building washdown is normally contained within the building, and is disposed of in whatever manner is used for other contaminated wastewater. At least one plant had raised curbs around all floor drains and across all doorways to keep spills within the area. Absorbent compounds and vacuum sweepers are then used to remove the contaminants.

Water-scrubbing devices are often used to control emissions to the air. Most of these devices generate a wastewater stream that is potentially contaminated with pesticidal materials. Although the quantity of water in the system is high, about 20 gallons per 1,000 cfm, water consumption is kept low by a recycle-sludge removal system. Effluent from air pollution control equipment should be disposed of with other contaminated wastewater. One type of widely used air scrubber is the toro-clone separator, in which air is cleaned by centrifugal force.

A few formulation plants process used pesticide drums so that they can be sold to a drum reconditioner or reused by the formulator for appropriate products, or simply to decontaminate the drums before they are disposed of. Drum-washing procedures range from a single rinse with a small volume of caustic solution or water to complete decontamination and reconditioning processes. Wastewaters from drum-washing operations are contained within the processing area and treated with other processing wastewater.

Most of the larger formulation plants have some type of control laboratory on the plant site. Wastewater from the control laboratories relative to the production operations, therefore, can range from an insignificantly small, slightly contaminated stream to a rather concentrated source of contamination. In many cases, this stream can be discharged into the sanitary waste or municipal treatment system. Larger, more highly contaminated streams, however, must be treated along with other contaminated wastewaters.

The major source of contaminated wastewater from pesticide formulation plants is equipment cleanup. Formulation lines, including filling equipment, must be cleaned out periodically to prevent cross-contamination of one product with another. Occasionally, equipment must also be cleaned out so that needed maintenance may be performed. When possible, equipment is washed with formula solvent. The collected solvent can be used in the next formulation of the same product.

Liquid formulation lines are cleaned out most frequently and generally require the most water. All parts of the system that potentially contain pesticidal ingredients must be cleaned. More than one rinsing of process vessels and lines is required to get the system clean. As a general rule, the smaller the capacity of the line, the more critical cleanup becomes, in order to avoid cross contamination. Thus, large volumes of washwater are required, relative to production quantity, for smaller units.

Granule, as well as dust and powder lines, also require cleanup. Liquid washouts are generally required, however, only in that portion of the units where liquids are normally present, i.e., the active ingredient pumping system, scales, and lines. The remainder of these production units can normally be cleaned out by "dry washing" with an inert material, such as clay.

Spills of technical material or material in process are normally absorbed on sand or clay, and are disposed of with other potentially toxic solid wastes in a Class-1 landfill. If the spill area is washed down, the resultant wastewater should be disposed of with the other contaminated wastewaters.

Natural runoff at formulating and packaging plants, if not properly handled, can become a major factor in the operation of wastewater systems simply because the relatively high flow and the fact that normal plant wastewater volumes are generally extremely low. Isolation of runoff from any contaminated process areas or wastewaters, however, eliminates its potential for becoming significantly contaminated with pesticides. Uncontaminated runoff is usually allowed to drain naturally from the plant site.

In some plants, formulation units, filling lines, and storage areas are located in the open. The runoff from these potentially contaminated areas, as a rule, cannot be assumed to be free of pollutants and should not be allowed to discharge directly from the plant site.

In summary, wastewater generated at formulator and packaging plants are:

Formulation equipment cleanup
Spill washdown
Drum washing
Air pollution control devices
Area runoff

Basis for Assignment to Subcategories

The assignment of subcategories to pesticide plants manufacturing active ingredient products (that is, Subcategories A through D) can best be described by Table IIIC-4, where most pesticides are listed by common name and basic chemical structure. Pesticides not listed in Table IIIC-4 because they are small production-volume commodities, or because they were first manufactured after preparation of this document, can be assigned based on their chemical structure or nature of the active component (halogen, phosphorus, etc.) Additionally, subcategory assignment can be made based on the production process similarities with other pesticides in the same chemical family or homolog group.

Plants not producing active ingredient commodities, but using the premanufactured active ingredient for formulated or package product, obviously fall into Subcategory E. Formulations or packaged products in the form of water solutions or suspensions belong in Subcategory E_1. Solvent-based and dry products should be assigned to Subcategory E_2. "Dry" products, which contain small quantities of water as an impurity or binding agent, do not qualify as water-based products.

D. Adhesive anu Sealants Industry

Discussion of the Rationale of Categorization

In the development of effluent guidelines and standards of performance for the Adhesive and Sealants Industry, it was necessary to determine whether significant differences exist which could form a basis for categorization of the industry. The following factors were considered in determining the meaningful subcategorization:

Production Processes

The manufacturing processes for all subcategories within the industry are basically the same. From one-man garage-type operations to large industrial complexes, the manufacturing process consist of mixing or compounding the various components in batch mix tanks or kettles.

Both water base and organic solvent base adhesives are produced by mixing the raw materials in mixing tanks under ambient temperatures or heating the tank contents with steam. The non-solvent base adhevsives (thermoplastic and dry-blend adhesives) are produced in mixing tanks also. Thermoplastic adhesives require heat while dry-blends do not. All production processes descriked akove are batch processes. The one exception is animal glude production, which involves hot water applications for the extraction of glue from the raw materials.

Product Types and Yields

There are hundreds of adhesive preparations on the market today, supplemented by hundreds of available formulations, which are capable of holding materials together by surface attachment. Although the basic components of the products are generally obtainable, their specific formulas are not always known to the public. Many adhesive compositions are protected by patents. Adhesives can be classified in several different ways: by the chemical composition of their main components, by their use in bonding various types of materials, or according to the adherends with which they are commonly used, for example.

Solvents are needed in most adhesives to disperse the binder to a spreadakle liquid form. In most wood- and paper-bonding adhesives the solvent is water. In many adhesives based on synthetic resins, rubbers, and even natural gums, a variety of organic solvents are required to achieve the necessary solubility and to provide some minimum percentage of base solids. However, thermoplastic adhesives and dry blended adhesive materials are composed completely of solids and contain neither water nor solvent-based materials. Polymeric, thermoplastic solids are converted to mobile fluids when subjected to sufficient amounts of heat.

Raw Materials

In addition to the base, binder, or chief ingredient, adhesives contain different types of chemicals, each having a specific function in the formulation. Other ingredients used in adhesives are solvents, thinners or diluents, catalysts, hardeners, fillers, extenders, preservatives, fortifiers, and carriers. These ingredients involve a wide variety of chemical commodities. The basic raw materials listed in Table IVD-1 are the major ones used for production of the four types of adhesives.

Plant Size

Operations in the Adhesive and Sealants industry range in sizes from one-man garage-type processes to large industrial complexes producing many kinds of adhesives. Wastewater quantities and characteristics can vary from similar production processes in different plants due to water use management, in-house practices, and pollution abatement measures. However, the same pollution abatement measures can be applied to similar production processes in different sized plants.

Plant Age

In some segments of the Adhesive industry, notably animal glue, the age of the plants and equipment is one of the most important aspects of reducing loads of waterborne pollutants. These plants were designed and built in an era when there was little concern about the emission of water pollutants. Process, equipment and plant layout designs did not provide a way to incorporate techniques for reducing water flows, and segregating and preventing pollutants from entering the water streams. The process conditions and engineering applicability of techniques such as countercurrent washing, segregation of non-process water streams from process waste water streams, water usage in housekeeping, and so on, are well known; however, incorporation of these procedures into old plants is a question of economics rather than a question of applying methods of water conservation and reduction in pollutant loads.

Plant Location

Plant location, and specifically local climate, will impact on performance of certain end-of-pipe wastewater treatment systems, e.g. aerated lagoons and activated sludge. Adhesive and sealants plants are scattered all over the United States, with the major concentrations being in the northeastern areas. According to the Adhesive Red Book, a large number of plants are also located in California and Illinois especially around the Chicago area (D-1).

Air Pollution Control Technology

Air pollution is not a major problem in any of the manufacturing activities in any subcategory. Odor problems are possible in the animal glue manufacturing process and might have to be controlled. A dust

Table IVD-1

Principal Raw Materials Used in
Adhesive and Sealants Manufacturing

1. Water based solutions containing natural and synthetic materials.

Starches	Polyvinyl acetate - homo-polymers, co-polymers
Dextrins	Acrylic Polymers and Co-polymers
Sugars	Synthetic and natural elastomeric lattices
Syrups	Polyvinyl chloride
Animal & Fish Glue	Polyvinyl alcohol
Gelatins	Rosin and rosin derivatives
Caseins	Bituminous
Cellulosic	Hydrocarbon resins
Marine Colloids	Phenolic resins
Lignin	

2. Solvent solution adhesives and cements (Non-water based solutions).

Synthetic and natural elastomers	Solvents
Synthetic and natural resins	Aliphatic hydrocarbons
Synthetic and natural rosins, and modified rosins	Ketones and mixed ketones
Plasticizers	Aromatic hydrocarbons
Anti-oxidants	Nitrated Halogenated hydrocarbons
Peptizing Agents	Alcohols
	Esters
	Ethers
	Amines

3. Solid and Semi-Solid and Thermoplastic Thermosetting Compounds

Synthetic polymers and copolymers	Synthetics and natural waxes
Synthetic natural resins	Synthetics and natural oils
Synthetic natural rosins and modified rosins	Plasticizers

4. Dry-Blended Adhesive Materials

Silicas	Assorted Cements
Clays	Fillers
Plaster	

Table IVD-1
(continued)

5. The following materials can be found, as additives, in the preceeding groups.

A. Fillers
- Clays
- Calcium carbonates
- Calcium sulphates
- Talcs
- Pigments, dyes, oxides
- Asbestos
- Sand
- Fly Ash, etc.

B. Solvents and Plasticizers
- Aliphatic hydrocarbons
- Ketones and mixed ketones
- Aromatic hydrocarbons
- Nitrated Halogenated hydrocarbons
- Alcohols
- Esters
- Ethers
- Amines

C. Surface Active Agents
- Surfactants
- Soaps
- Defoamers
- Penetrating Agents

D. Preservatives
- Fungicides
- Mildewicides
- Bactericides

E. Miscellaneous Components
- Organic Salts
- Inorganic Salts
- Acids
- Bases
- Humectants
- Metals
- Thickeners - Polymeric or cellulosic, etc.
- Anti-oxidants

problem is possible in the dry-blending operations. Careful operation involving improved materials-handling techniques and maintenance of equipment could reduce this problem substantially. Therefore, air pollution control technology is not a significant factor in subcategorization of the Adhesive and Sealants Industry.

Solid Waste Disposal

Quantities of solid residue generated from adhesive production are minimal. Significant quantities of tankage are generated from animal glue manufacturing, but this tankage is recycled for the production of fertilizer. The handling and final disposal of solid waste which may be generated in the Adhesive and Sealants industry would not impact the quantity or characteristics of the wastewater; therefore, solid waste generation, handling, and disposal are not a basis for subcategorization.

Wastewater Quantities, Characteristics, Control and Treatment

The general adhesive manufacturing process has been examined for the type of contact process water usage associated with it. Contact process water is defined to be all water which comes in contact with chemicals within the process and includes:

1. Water required or produced (in stoichiometric quantities) in the chemical reation.

2. Water used as a solvent or as an aqueous medium for the reactions.

3. Water which enters the process with any of the reactants or which is used as a diluent (including steam).

4. Water associated with mechanical devices such as vacuum pumps or steam-jet ejectors for drawing a vacuum on the process.

5. Water used as a quench or direct-contact coolant such as in a barometric condenser.

6. Water used to wash, rinse, or flush adhesive mix tanks or kettles and pipelines.

Noncontact flows not included in the raw waste load data include the following:

1. Sanitary wastewaters.

2. Boiler and cooling tower blowdowns or once-through cooling water.

3. Chemical regenerants from boiler feed water preparation.

4. Storm water runoff from nonprocess plant areas, e.g., tank farms.

The manufacturing process has also been examined according to the raw waste loads associated with the manufacture of specific adhesive formulations. The water-base and solvent-base groups of adhesives have each been subdivided into two subcategories because of differences in the types and characteristics of wastewaters generated. The wastewater characteristics generated for each of the subcategories do not reflect total raw waste loads because of in-plant pollution abatement measures practiced by the industries in all subcategories.

Summary of Considerations

The diverse range of adhesive products to be covered suggested that separate effluent limitations guidelines need to be designated for different segments of the industry. Therefore, a subcategorization of the Adhesive and Sealant industry was developed. The factors which significantly impacted on the basis for subcategorization include the following:

1. Production
2. Product Types
3. Raw Material Sources
4. Wastewater Quantities and Characteristics

For the purpose of establishing effluent limitations guidelines and standards, the Adhesive and Sealants industry has been subcategorized, as shown below:

A. Water-Based Animal Glues and Gelatins
B. Other Water-Based Adhesive Solutions
C. Solvent-Based Adhesives Generating Contaminated Wastewaters
D. Solvent-Based Adhesives Generating Noncontact Cooling Waters Only
E. Thermoplastic Adhesives
F. Dry-blended Adhesives

Adhesives in each of the subcategories are manufactured by batch processes; however, the adhesives in Subcategory A are produced by different processes than the adhesives in other subcategories.

Description of Subcategories

The following pages in this section contain a profile of the findings made during field surveys of the Adhesive and Sealants industry. The profiles contain typical process flow schematic diagrams and are grouped according to the proposed categorization of the industry.

Subcategory A - Water Based Animal Glues and Gelatins

The processes for the manufacture of glue and gelatin are similar, the difference being in the highly selective raw material used for gelatin and in the degree of hydrolysis. Following an initial washing, the raw material is placed in vats to soak in 5-15 percent lime slurry for a period of a month or more. After this soaking period, the limed stock is washed, neutralized with dilute sulfuric acid and given a final wash. The washed stock is cooked, which involves repeated hot water applications for the extraction of the glue/gelatin fractions. The initial raw material washings, spent lime slurry from the soaking vats, acid from the neutralization of residual lime and the associated washings, and the cooker wastes comprise wastewater volumes from this manufacturing process. Large volumes of wastewater with high concentrations of BOD, COD, TOC, and suspended solids are generated during the manufacturing process. In-plant pollution abatement measures to reduce raw waste loads include grease recovery and recirculation of large solids in the waste stream. Tankage is also reclaimed as a by-product for the manufacture of fertilizer.

Subcategory B - Water-Based Adhesive Solutions Containing Synthetic and Natural Materials

Next to animal glue, the water-based adhesives consume the largest amounts of water (i.e. water in product) and have the most frequent discharges of high-strength wastes. These batch processes are carried out in jacketed reaction kettles which are equipped with agitators and usually have provisions for injecting steam directly into the materials being mixed or circulating steam or cooling water in the jacket around the mixer.

Most water-based adhesives produced are hot blends. Raw ingredients and water are added to process vessels, and steam is injected directly into the materials being blended to raise their temperature. After cooking is complete, the adhesive temperature is lowered by passing cooling water through the jacketed process vessel. The reactants and products are transferred from one piece of equipment to another by gravity flow or pumping. Much of the material handling is manual, with some use of automatic process control.

Other types of water-based adhesive preparations include jacket cooks and cold blends. In the jacket cook preparation, steam circulating in the process vessel jacket allows the product to be jelled and provides the close temperature control required for the manufacture of certain adhesives. The procedure for cold blend production entails the mixing of raw materials and water at ambient temperature until the desired viscosity is obtained.

In all of these processes, the cooling water is usually circulated once through the jacket and then discharged. Cleaning of the non continuous production equipment constitutes a major source of waste water. Depending upon the succession of products manufactured in the process vessels, one of three principal washing procedures may be employed. These include:

1. a hot water wash at the end of the day;

2. a hot water wash following each product mixing; and

3. a hot, dilute caustic solution wash followed by a hot water rinse following the preparation of one or more batches of special types of products.

In addition to above cleaning procedures, process vessels may be filled with holding water after each working day to prevent encrustation of adhesive residue in the vessels.

Subcategory C - Solvent Solution Adhesives and Cements Generating Contaminated Wastewaters

There are many types of solvent-based adhesives and variations of each type of adhesive. Distinct types of solvent-based adhesives, each with varying properties, may be produced by using different solvents or by adding of other ingredients. These adhesives are produced in jacketed reaction mixing vessels as described in Subcategory B. Raw materials are mixed, steam heated, and cooled by noncontact cooling water. The mixture is cooked until the proper solids concentration has been attained by removing distillate from the process vessel during the cooking process. The distillate is removed by means of a vacuum pump or steam-jet ejector. This contaminated distillate constitutes the major source of liquid process wastewater generated. Another source of wastewater is caustic washwater used at some plants in the cleaning of the process vessels. Noncontact cooling water from the process vessels is the major water discharge from adhesives plants in this subcategory. Other wastewaters discharged are noncontact cooling water from rubber milling machinery and waste from boiler blowdown and from quality control laboratories.

Subcategory D - Solvent Solution Adhesives and Cements Generating Noncontact Cooling Water Only

Like subcategories B and C, heating and cooling in Subcategory D are done indirectly in jacketed reaction vessels. However, water is not required as a reactant or diluent and is not formed as a reaction product. Process raw waste loads should approach zero, with variations caused by spills or process upsets. Washwater loads can be eliminated by washing with a controlled amount of solvent which can be recycled back into the product.

Some adhesives plants in this subcategory have the capacity to manufacture their own solvents, such as formaldehyde which they use in adhesive production. These may be continuous processes, like the Reichhold formaldehyde manufacturing process. Water discharges from this process include noncontact cooling water and water from demineralization units. Contaminated wastewater and process cleaning water can be recycled back into the product.

Subcategory E - Solid and Semi-Solid Hot Melt Thermoplastic Adhesives

Thermoplastic adhesives are produced from solids which are converted to mobile fluids when subjected to sufficient amounts of heat. These are totally solids and contain neither water nor solvent based materials. Because thermoplastics adhesives contain no water, hot oil circulated through the process vessel jackets is used to provide the heat energy needed for the manufacturing process. The hot oils are continually heated and circulated and therefore are not a source of waste. Because water is incompatible with thermoplastic adhesives, it is normally not used for any purpose during the manufacture and packaging of these adhesives products. The hot-melt adhesives may be packaged while hot to take the shape of their containers, or they may be cooled by cryogenic nitrogen cooling systems. In some plants, thermoplastic adhesives may be cooled by water chilling units. The chilling unit recirculates the cooling water and has intermittent discharges. The process raw waste loads should approach zero for this particular subcategory of the adhesives industry.

Subcategory F - Dry-Blended Adhesive Materials

The dry-blending formulation process consists of a mixing tank where raw materials are added by bulk and manual addition, and mixed to the proper consistency. The principal product is a grout mix or underlayment, which is a patching compound. The finished products are usually bagged in paper sacks and hauled from the plant by truck. There is no water use associated with this simple mixing process, and thus, there is no wastewater discharge from the dry-blending operation. The process raw waste loads should be zero for this subcategory.

Process Descriptions

Animal Glue and Gelatin

Animal glue and gelatin are proteins derived from the simple hydrolysis of collagen, which is a principal protein constituent of animal hide, connective tissue, and bones. The formula for this reaction is only

an indication of the complex changes that take place, proceeding from quite variable raw materials to almost as variable products.

$$C_{102}H_{149}O_{38}N_{31} + H_2O \rightleftharpoons C_{102}H_{151}O_{39}N_{31}$$

which gives an approximate chemical composition for glue or gelatin of:

	Percent
Carbon	51.29
Hydrogen	6.39
Oxygen	24.13
Nitrogen	18.19
	100.00

The formula has been confirmed within close tolerances by many investigators (D-2). As a protein, animal glue is essentially composed of polyamides of certain alph-amino acids.

The animal glue manufacturing process may be divided into three areas, as shown in Figure IVD-1: the mill house, where stock is made amenable to glue extraction by washing and milling; the cook house, where the stock is cooked and the light liquor is extracted; and the drying rooms, where the light liquor is condensed and dried to the final product.

The bulk of water-borne wastes come from the mill house and includes lime from soaking, acids, wash water, dirt, hair, and miscellaneous solids brought in with the stock. Three types of hide stock (raw material) are used - green fleshings, hide stock, and chromesplit stock - and processing is somewhat different for each. Fleshings, the substance which joins animal skins to the carcass, are the most perishable raw material. They are washed for approximately 12 hours, acidulated, and then soaked before being brought to the cook house. Hides are first desalted and cleaned by milling, then limed and soaked for 80 to 90 days in large vats. After this soaking period, they are washed free of lime, acidulated, and sent to the cook house. Chrome splits are first chopped up mechanically and limed. The lime is washed out, sulfuric acid is added, and the washing begins. After the acid has been washed out, the stock soaks in dilute acid for approximately 8 hours before neutralization is provided. After a final period of soaking the stock is sent to the cook house.

Cook-house operations consist of loading the prepared stock into large kettles and cooking it with steam. After about 6 hours, the light liquor is drained off. The process is repeated three more times, each cook yielding a lower grade of glue. The material left

FIGURE IVD-1

ANIMAL GLUE MANUFACTURING BATCH PROCESS FLOW CHART

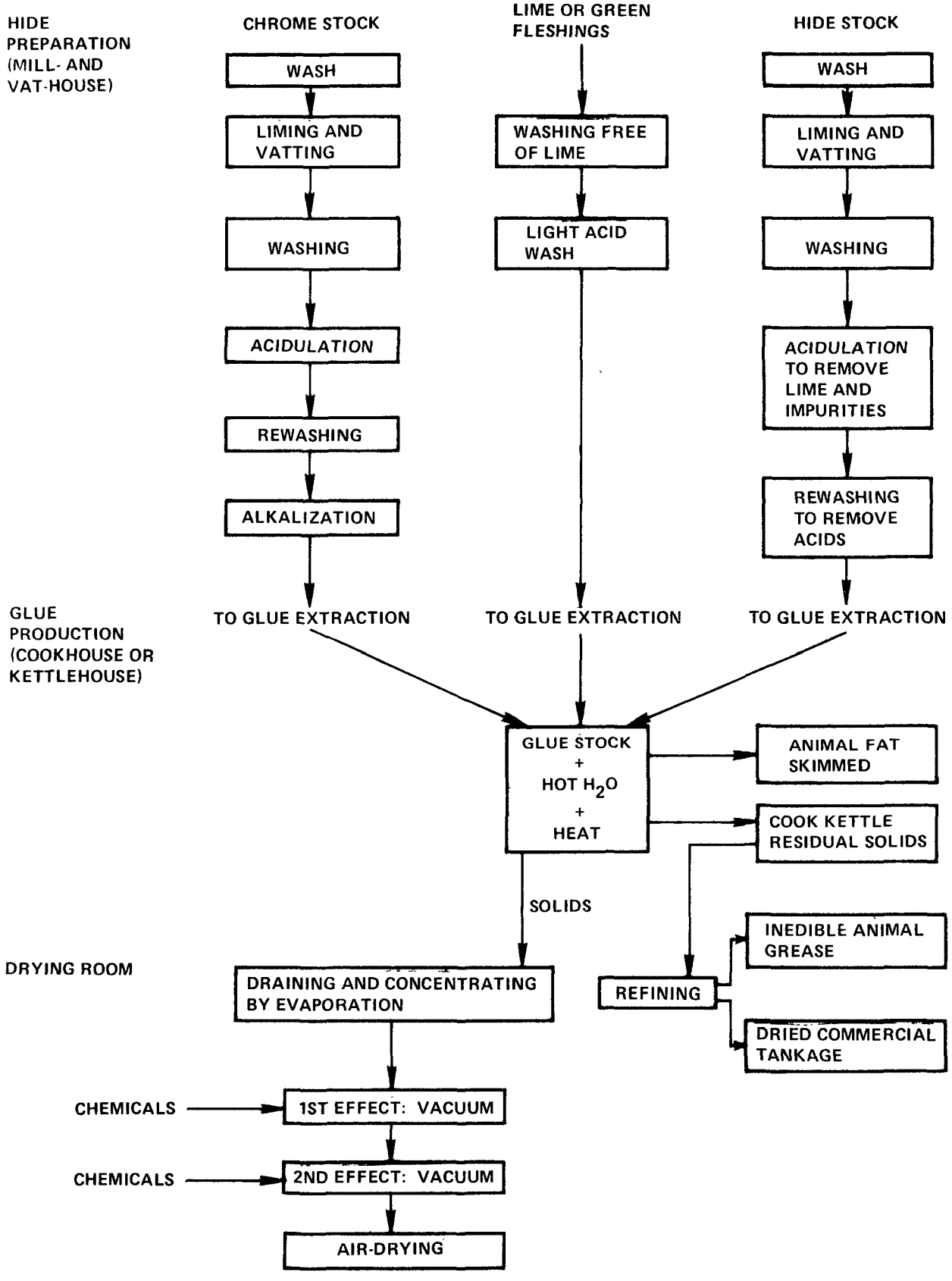

after the final cook cycle is called tankage. This is further treated to yield products such as grease, hair, and fertilizer.

Animal glue and gelatin may also be produced by using bones as the raw materials. The procedures include grinding bones, degreasing the material by percolating a grease solvent through it, liming and plumping, washing, making several extractions by hot water, filtering liquors, evaporating chilling, and drying the jelly slabs in a tunnel drier. When dry, the slabs of glue are flaked or ground, blended, graded, and barreled or bagged for shipment. Figure IVD-2 shows some of the products from this process.

Variations of this process which do away with the tunnel drying and considerable hand labor have been developed. These consist of forcing the evaporated chilled extraction liquors containing 50 percent glue through a wire grill or colander instead of placing slabs in a tunnel dryer. The glue, when forced through the wire grill, is cut off into small pellets by knifelike blades. The pellets are dried in a three-stage drying system, using bins and rakes to stir them. In some processes, the pellets are dropped from the colander or grill into a chilling bath, such as benzene, where they solidify. The adhering benzene evaporates, and the pellets are dried. This pellet form of glue is known as pearl glue. However, more than three-fourths of the glue produced in the United States is sold in the ground form, and the remaining fourth is sold mostly in flake form. Pellet or pearl glue makes up only a small portion of the total glue production.

Water and Solvent Base Adhesives Manufacture

Water-based and solvent-based adhesives are both produced by batch processes in jacketed or non-jacketed process vessels, as shown in Figures IVD-3 and IVD-4. The jacketed process vessels or mix tanks have provisions for injecting steam directly into the materials being mixed or circulating steam or cooling water in the jackets around the mixers. Hot blends are produced by adding the raw materials and water to process vessels, and by injecting steam directly into the materials being blended to raise the temperature. Raw materials are added manually or metered into the process vessels, depending on the quantities required. After cooking is complete, the adhesive temperature is lowered by passing cooling water through the jacketed vessels. The cooled product is then either drained to 55-gallon drums or smaller containers for storage or shipment, or is pumped to a larger storage vessel for eventual transfer to a tanker truck. In the jacket-cook preparation, steam circulating in the process vessel jacket allows the product to be jelled or provides the close temperature control usually required for the manufacture of protein base products (animal or casein glues). In the cold-blend preparation, neither steam nor cooling water is required, and therefore, non-jacketed process vessels

FIGURE IVD-2

ANIMAL GLUE AND GELATIN FLOW CHART FROM RAW MATERIALS TO PRODUCTS AND BY-PRODUCTS

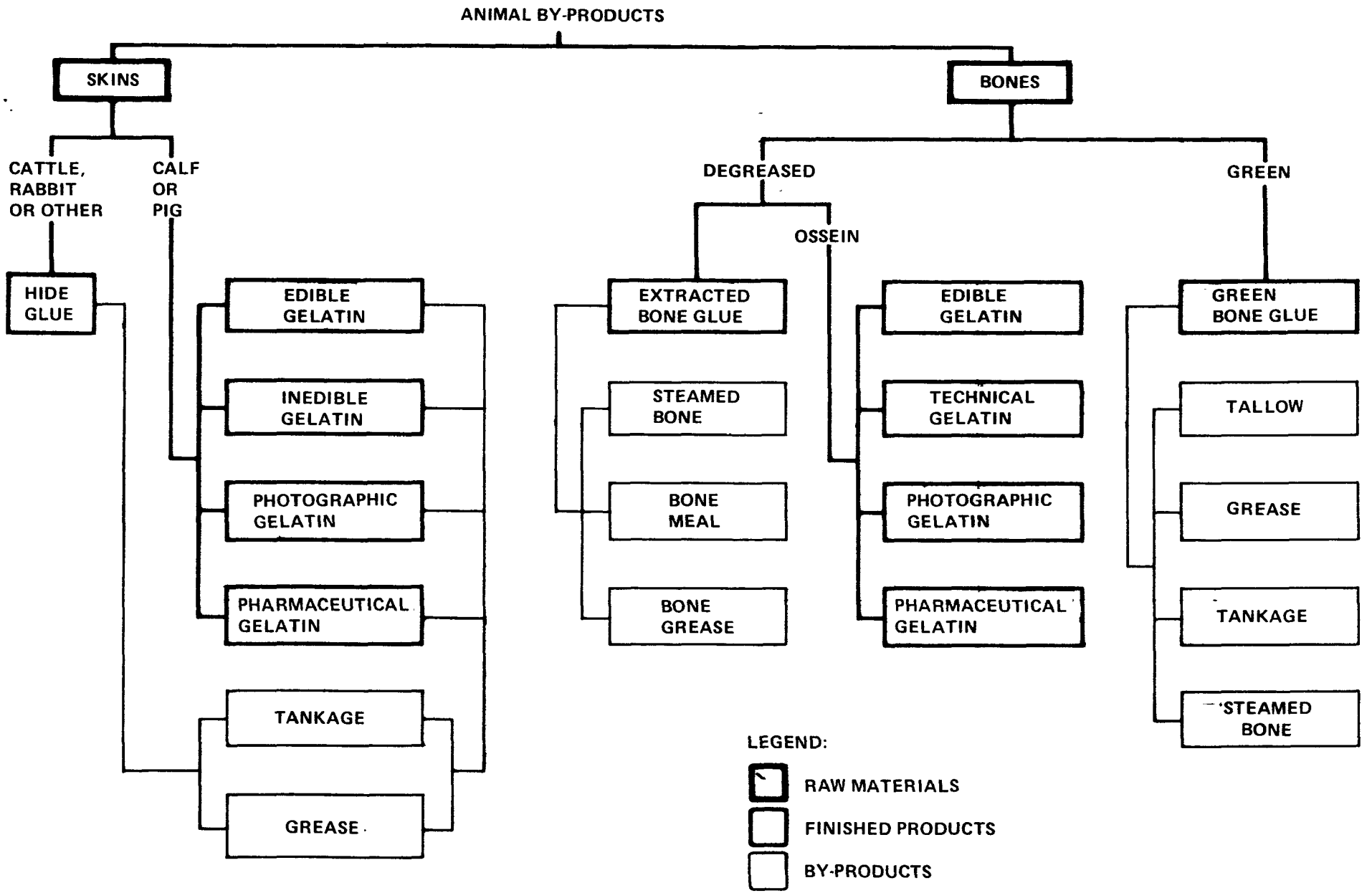

FIGURE IVD-3

BATCH ADHESIVE MANUFACTURING PROCESS FLOW CHART

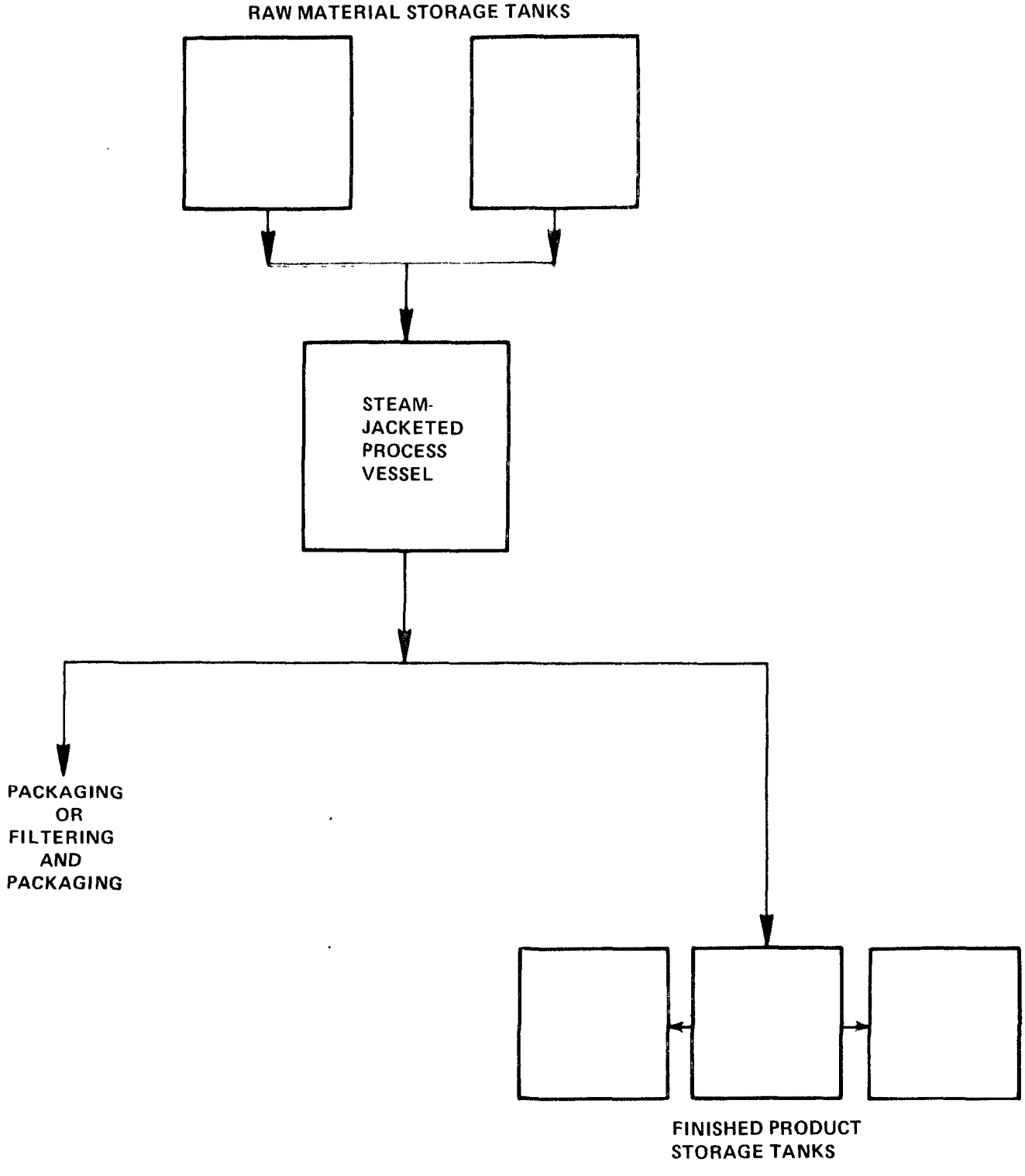

FIGURE IVD-4

FORMALDEHYDE-RESIN BATCH
MANUFACTURING PROCESS FLOW CHART

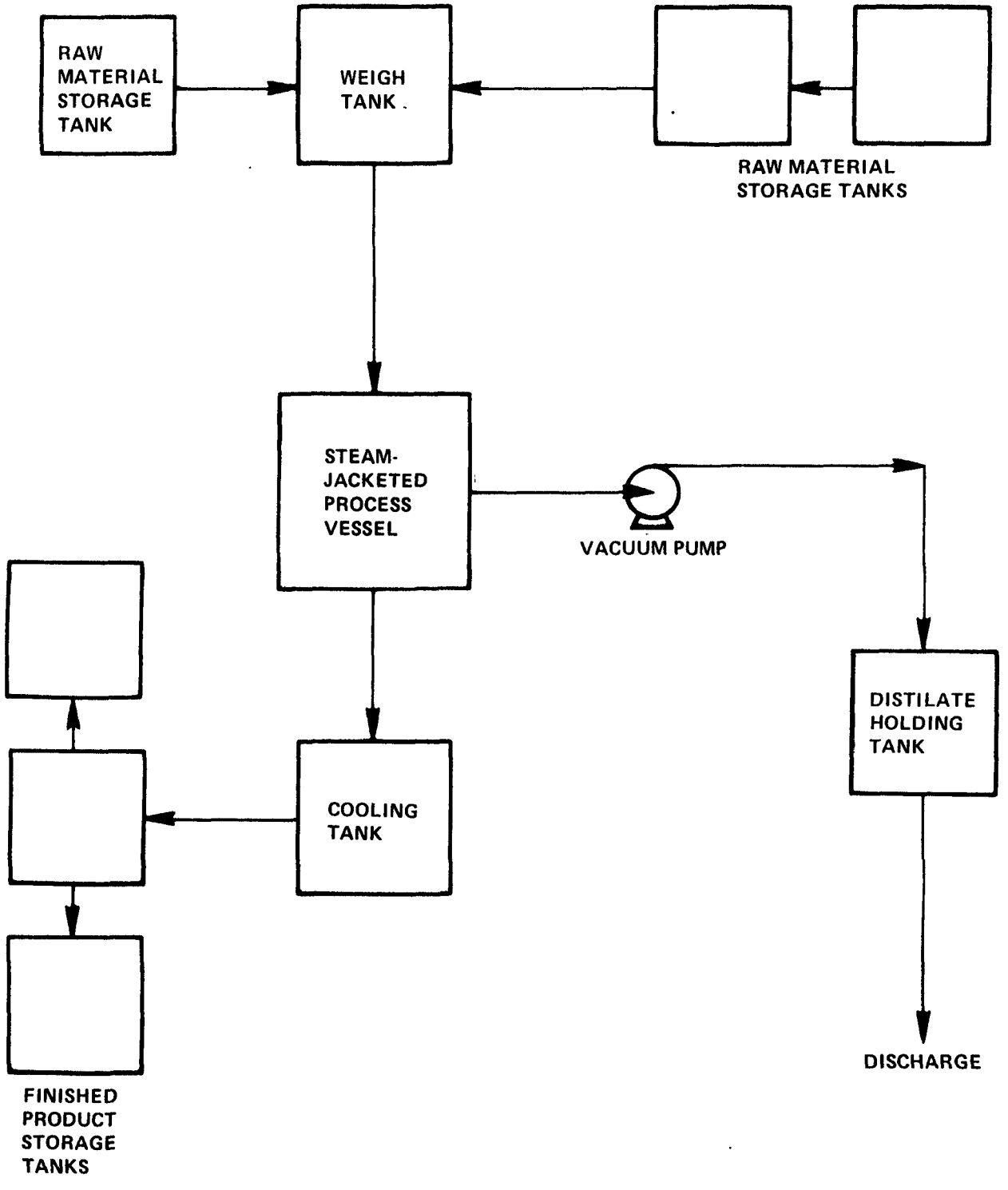

may be used. Non-jacketed vessels can be used for cold-blend preparations only, while jacketed vessels may be used for all three types of adhesive preparations. The procedure for cold-blend production entails the mixing of raw materials and water at ambient temperatures until the desired viscosity is obtained. Again, the products are drained or pumped to containers or large storage vessels for storage or shipment.

Some plants have the capability to manufacture their own organic solvents like formaldehyde, which they can use in the production of adhesives. Formaldehyde results from the oxidation of methanol, as described in the EPA Development Document for the Organic Chemicals industry (D-3).

Thermoplastic Adhesives Manufacture

Hot-melt thermoplastic adhesives, like other adhesives, may be prepared in jacketed or non-jacketed process vessels. Heated oil may be circulated through the process vessel jackets to provide the heat energy needed for the manufacturing process. Because water is incompatible with thermoplastic adhesives, it is not used for any purpose during the manufacture of these adhesives. Since these adhesives are totally solids and contain neither water nor solvent, they cannot be cooled in the process vessels. Hot-melt adhesives may be packaged while hot and allowed to cool in the shape of the container, or they may be cooled by cyrogenic nitrogen cooling systems or water chilling units. Hot melt thermoplastic adhesives are available in bulk, block, billet, candle, cake, chunk, pillow, or pellet forms.

Dry-Blended Adhesive Materials Manufacture

Dry-blended adhesive production requires only a non-jacketed tank or compartment with some type of mixing apparatus. A screw type mixer is normally employed for this process. Water is incompatible with the dry-blended powdered materials, and therefore, it is not used for any purpose during the manufacture or packaging of these materials. These materials are also completely solids, and they are packaged in paper sacks for shipment.

Basis for Assignment to Subcategories

The subcategorization of the Adhesive and Sealants industry assigns specific products to specific subcategories by the type of product produced and the quantities and qualities of wastewaters generated. The subcategories form four main groups: water-based adhesives, solvent-based adhesives, hot-melt or thermoplastic adhesives, and dry-blended adhesive materials. All adhesive products are produced by batch processes. Water-based adhesives are split into two subcategories because of differences in batch manufacturing processes and quantities and qualities of wastewater produced. Solvent-based

adhesives are also divided into two subcategories because of differences in the types of wastewaters generated. In the manufacture of solvent-based adhesives, the reaction vessel is basically the same for both processes, but one method produces contaminated wastewater as distillate from the cooking process, while the other manufacturing process discharges noncontact cooling water only. The production of thermoplastic adhesives should have no discharge of process wastewater pollutants, and the dry-blending formulation process is a zero discharge process.

E. Explosives Industry

Discussion of the Rationale of Categorization

In the development of effluent guidelines and standards of performance for the Explosives industry, it was necessary to determine whether significant differences exist which could form a basis for categorization of the industry. The following factors were considered in developing a categorization of the industry.

Raw Material, Production Processes and Product Type

The general production process for the manufacturing of explosives involves the nitration of an organic molecule. Raw materials used in this process are nitric acid, acting as the nitrate source, and sulfuric or acetic acid, acting as a dehydrating agent. Examples of the organic molecules used are glycerin, toluene, resorsinol, hexamine and cellulose. After nitration, these organic molecules produce the following products; nitroglycerin and dinitroglycerin; trinitrotoluene and dinitrotoluene; trinitroresorscinol; nitromanite; and nitrocellulose, respectively. Additional production processes involve the formation of highly sensitive initiators with nitrogen salts as a nitrogen source. An example of this product would be lead azide.

A categorization based on product or process is possible. For example, the Explosives industry could be broken down into three areas; explosives, propellants and initiators. Explosives and propellants are manufactured in bulk, while initiators (highly sensitive compounds used to ignite the explosive or propellant) are manufactured in small quantities. The differences between explosives and propellants are only theoretical. Explosives oxidize at an extremely fast rate, giving off large volumes of gas. Propellants burn layer after layer at a much slower rate than explosives. These facts make products a basis for subcategorization.

Plant Size

Plant sizes ranged from a few hundred to several thousand acres. Explosive plants are generally spread out (each area isolated from the other) so that, if a serious accident occurs, a chain reaction will be minimized. Plant size had no bearing on waste characteristics.

Plant Age

Most plants visited were old plants, ranging from 20 - 50 years in age. Waste characteristics could not be correlated to age. Plant age could affect the water segregation practices in the industry. Most plants do not separate uncontaminated cooling waters, and load and pack operations use large amounts of water for corrosion control.

Plant Location

Most explosives plants are evenly distributed in the eastern portions of the United States, away from large population centers (See Map IVE-1). They are generally located in rural areas or areas that were rural when the plant began operations. Local climate could have an impact upon treatment plant performance or design. For example, aerated lagoon could be more cost-effective than activated sludge in warmer climates.

Air Pollution Technology

Air pollution can be a major problem in the Explosives industry, since the imperfect explosives are collected and burned. Air pollution controls were almost non-existant at the plants visited, but most plants had plans for controlling emissions. Wet-scrubbers are used in three areas, demilitarization, sulfate liquor incineration and sludge incineration.

Solid Waste

Solid waste, other than the imperfect explosives, is not a major problem. The imperfect explosives are collected and in general, burned in the open air. However, at least one plant incinerates its waste in a starred oxygen incinerator. Disposal of the ash can be done by landfilling.

Military vs. Commercial Explosives

Two major sectors of the Explosives industry are the military and the commercial sectors. Military plants can be separated into two areas: plants manufacturing of explosives and propellents and load and pack plants. Common military explosives are trinitrotoluene (TNT), RDX, HMX and Composition B. These are less sensitive explosives and are manufactured in bulk. In addition, the military manufactures sensitive explosives commonly called initiators. Examples of such initiators are mercury fulminate, tetryl, and lead styphnate.

The commercial sector of the Explosives industry can also be divided into plants manufacturing explosives and propellants and load and pack plants. Examples of explosives manufactured commercially are nitroglycerin (NG), ammonium nitrate, dynamites and gelatin dynamites. Load and pack plants typically buy the raw materials and blend explosives on site in a recipe operation.

Since both sectors of the Explosives industry are basically involved with the same production processes, the waste loads on a production basis were similar. Hence, the military and commercial sectors of the industry were considered as one in this study.

MAP IVE-1

EXPLOSIVES INDUSTRY

MAJOR EXPLOSIVES AND PROPELLANT FACILITIES IN THE U.S.

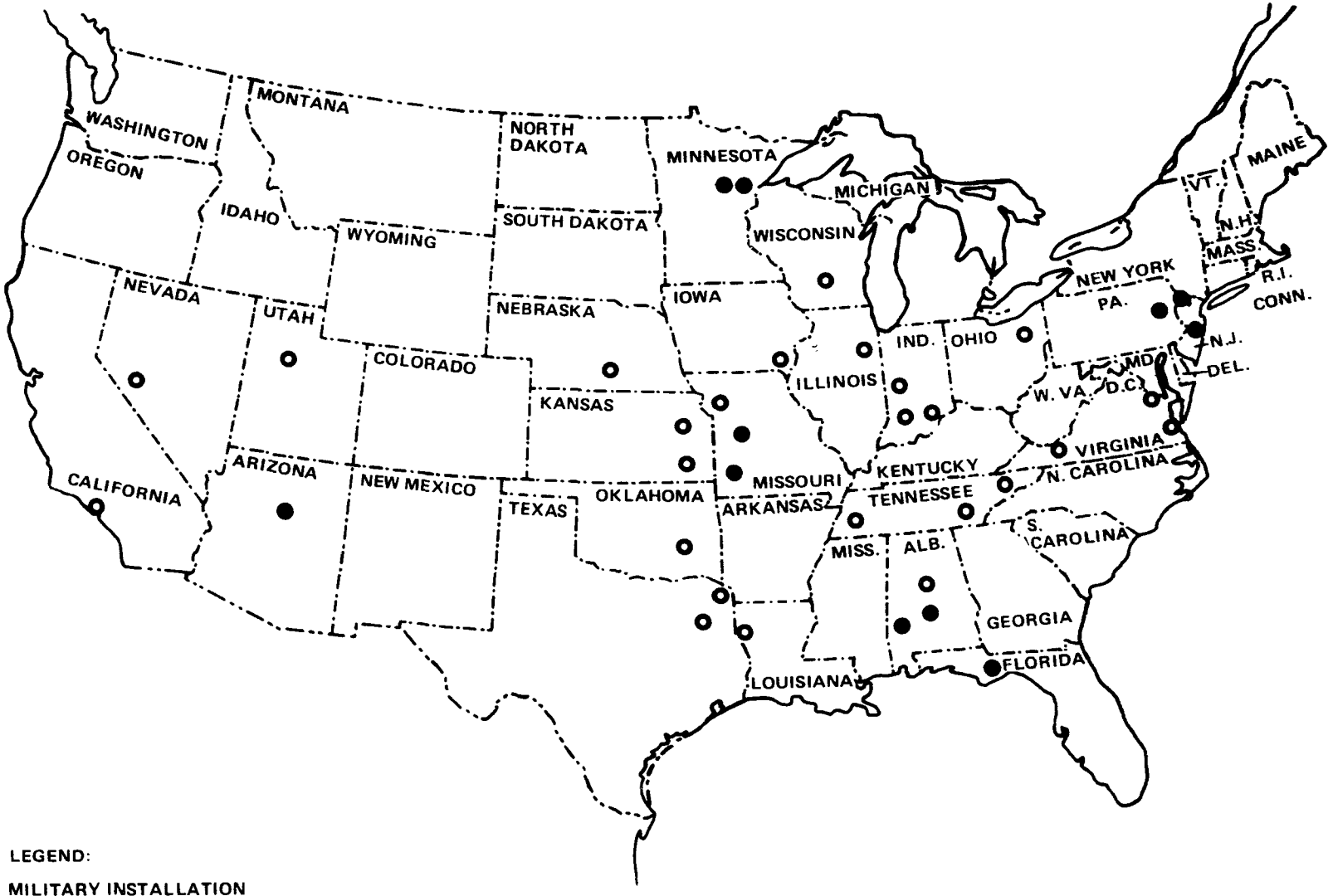

LEGEND:

- ○ MILITARY INSTALLATION
- ● COMMERCIAL INSTALLATION

NOT AN EXHAUSTIVE LIST

ROY F. WESTON, INC.
WESTON
ENVIRONMENTAL CONSULTANTS-DESIGNERS

DRAFT

Nature of Wastes Generated

Wastewater characteristics in the Explosives industry have extreme variability. Characteristics are presented for the industry by subcategory in Section V. For this reason, subcategorization of the industry was based on wastewater characterization. The industry has been divided into three initial subcategories:

A. Manufacturing Plants
B. Load and Pack Plants
C. Specialty Plants (Manufacture of Initiators)

Description of Subcategories

Subcategory A - Manufacturing Plants

Manufacturing plants are those plants that formulate explosives from raw materials by a specific industrial process. Such plants are generally large, complex facilities. Products can be generally classified as explosives or propellants. On the basis of this product difference, the manufacturing plant category was further subdivided into two areas: manufacture of explosives and manufacture of propellants.

Although there is no sharp boundary between the two areas, there are basic differences between them, including effluent characteristics. Explosives are compounds or mixtures of compounds which, when ignited, decompose rapidly, releasing large volumes of gases and heat. Propellants differ in their mode of decomposition in that they only burn. Burning in a propellant does not proceed through the material as in an explosive but in layers parallel to the surface. Examples of explosives are nitroglycerin, dynamite, ammonium nitrate and ammonium-nitrate-based explosives, RDX, HMX, and TNT. Propellants are generally all nitrocellulose-based. Single, double and triple based propellants, ball powder, high energy propellant and solventless propellants are all examples of propellants.

The wastes associated with the manufacture of explosives are of moderate strength, while wastes emanating from the manufacture of propellants are in some cases orders of magnitude higher. For example, the lb COD/ton production for the manufacture of propellant was 22.6 times larger than that for the manufacture of explosives. Constantly higher values for other water quality parameters for propellant manufacture necessitated the division of explosives manufacturing into these two areas. Note that, within each subcategory, the deviation from the average value is not excessive. For example, the average COD raw waste load for propellant manufacture was 174.8 lb COD/ton production and ranged from 70.7-271; for explosive manufacture, it was 7.73 and ranged from 1.1-20.6.

Subcategory B - Load and Pack Plants

Load and pack plants are those that typically buy all the necessary ingredients from an outside supplier then mix and pack them as a final product. Examples of this type of industry would be plants involved in the filling of shells, plants which load and pack ammonium nitrate and fuel oil (ANFO), nitrocarbo-nitrate (NCN), and blasting caps, and water slurry plants. In the military area munitions are filled with blends of TNT and other ingredients. The process of filling is preceeded by melting in a kettle. These kettles are cleaned after use along with other equipment.

Small rocket motors can be loaded with preshaped propellants that fit snugly into the casing. Pollutant loads from this operation generally come from the preshaping area. The wastes generated from this subcategory are small, coming from sloppy handling, accidental spills and wash downs of floors and equipment.

The Load and Pack operation in this definition exclude demilitarization. That is the process by which the military disposes of obsolete and detective munitions by scouring out the shells.

Subcategory C - Specialty Plants

Specialty plants are those manufacturing "sensitive" explosives. Examples of these explosives would be Pentaerythritol Tetranitrate (PETN), lead azide, lead mononitroresorcinate (LMR), lead styphonite, tetrl, nitromannite (HNM) and isosorbidedinitrate. The waste volume generated from this third category is generally small but highly concentrated.

Process Descriptions

Subcategory A1 - Manufacture of Explosives

Nitroglycerin

Nitroglycerin (NG) is synthesized in a batch rractor by a controlled reaction between a concentrated sulfuric acid (dehydrating agent), a concentrated nitric acid solution (nitrate source), and a mixture of ethylene glycol and glycerin. Figure IVE-1 shows a typical schematic diagram for the manufacture of nitroglycerin. The reactor contains cooling coils through which circulate a cooled brine solution. The reactor is initially charged with the nitrating acid mixture. The glycerin-glycol solution is then added, at a rate that maintains a

FIGURE IVE-1

TYPICAL NITROGLYCERIN PRODUCTION SCHEMATIC

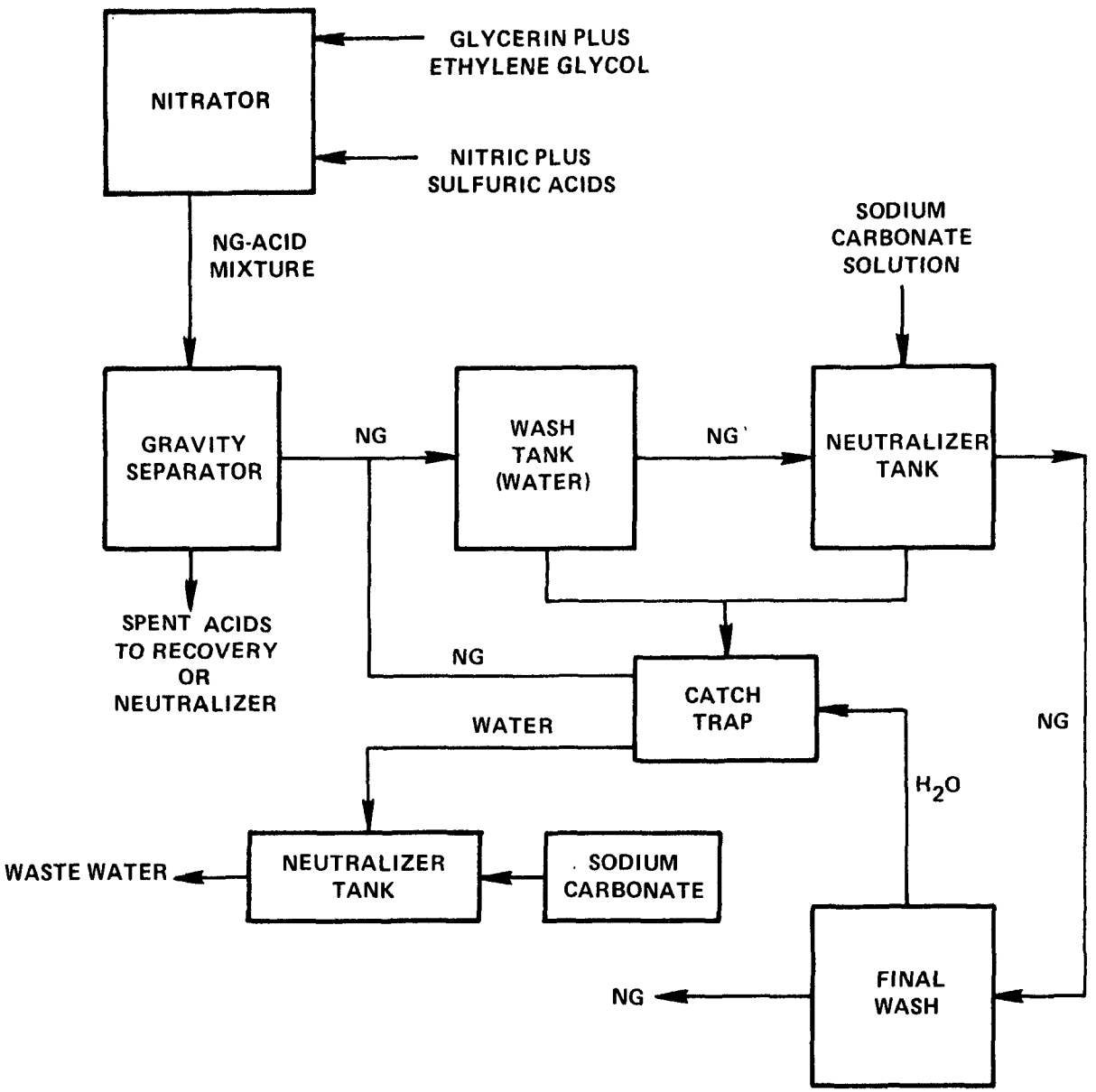

constant temperature in the reactor. The reacted product (a mixture of NG, ethylene glycol dinitrate, water and spent sulfuric and nitric acid) passes into a gravity separator tank where the spent acid is drawn from the bottom of the mixture and either discharged or sent on for recovery of nitric and sulfuric acid. The nitroglycerin is then dropped into a prewash tank and mixed with water. The resulting "sour water" is removed from the top and goes to a catch tank. The NG is drained from the catch tank and sent to neutralizer tanks. In the neutralizer tanks the NG is emulsified with a soda (Na_2CO_3) water solution. After a final wash with water the NG is taken to the dynamite formulation building. Ethyl acetate, a desensitizing-carrier solvent, is sometimes mixed with the NG when it is to be stored for a period of time.

Ammonium Nitrate

Ammonium nitrate is used primarily in granular or "prill" form in explosives. Anhydrous ammonia and weak nitric acid are reacted to yield concentrated (99%) ammonia nitrate. This solution is then crystalized by steel bowls or belts. The crystals are ground or crushed and screened. Various additives, including wax to coat the prill, and fullers' earth for moisture control are also blended, as show in Figure IVE-2.

Dynamites

There are many different formulations of dynamite, although the basic ingredients are nitroglycerin and ammonium nitrate. Ammonium nitrate is first mixed in batches with various minor ingredients. The most common of these are listed in Table IVE-1. This mixture forms a "dope", to which the nitroglycerin is added. The proportions of nitroglycerin and ammonium nitrate, and the specific minor ingredients and their proportions, determine the particular properties of the dynamite. Many dynamites are formulated to customer specification. After formulation, the dynamite is transported to a cartridging house for packaging into waxed cardboard or plastic tubes, and then shipped or stored in magazines.

Trinitrotoluene (TNT)

TNT is the most important military high explosive. It exceeds all other explosives by far, in tonnage produced per year. In its finished form it is a lightly yellow crystal. Figure IVE-3 presents an overall schematic of the TNT manufacturing process, which can be divided into two integrated sub-processes, nitration and purification.

FIGURE IVE-2

TYPICAL AMMONIUM NITRATE PRODUCTION SCHEMATIC

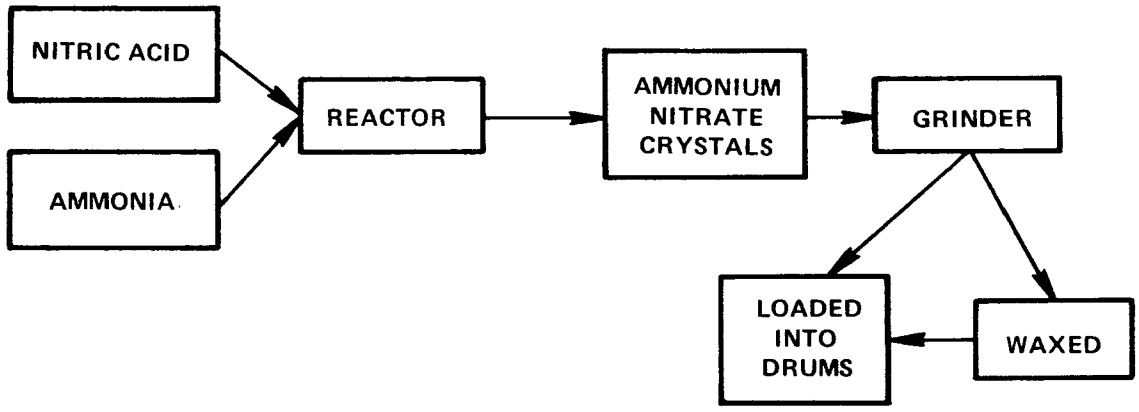

DRAFT

Table IVE-1

Common Ingredients of Dynamites

Nitroglycerin
Ammonium Nitrate
Sodium Nitrate
Sodium Chloride
Sulfur
Nitrocellulose
Phenolic Resin Beads
Bagasse
Sawdust and Wood Flour
Coal
Corn Meal and Corn Starch
Trace Inorganic Salts
Grain and Seed Hulls and Flours

FIGURE IVE-3

TYPICAL TNT PRODUCTION SCHEMATIC

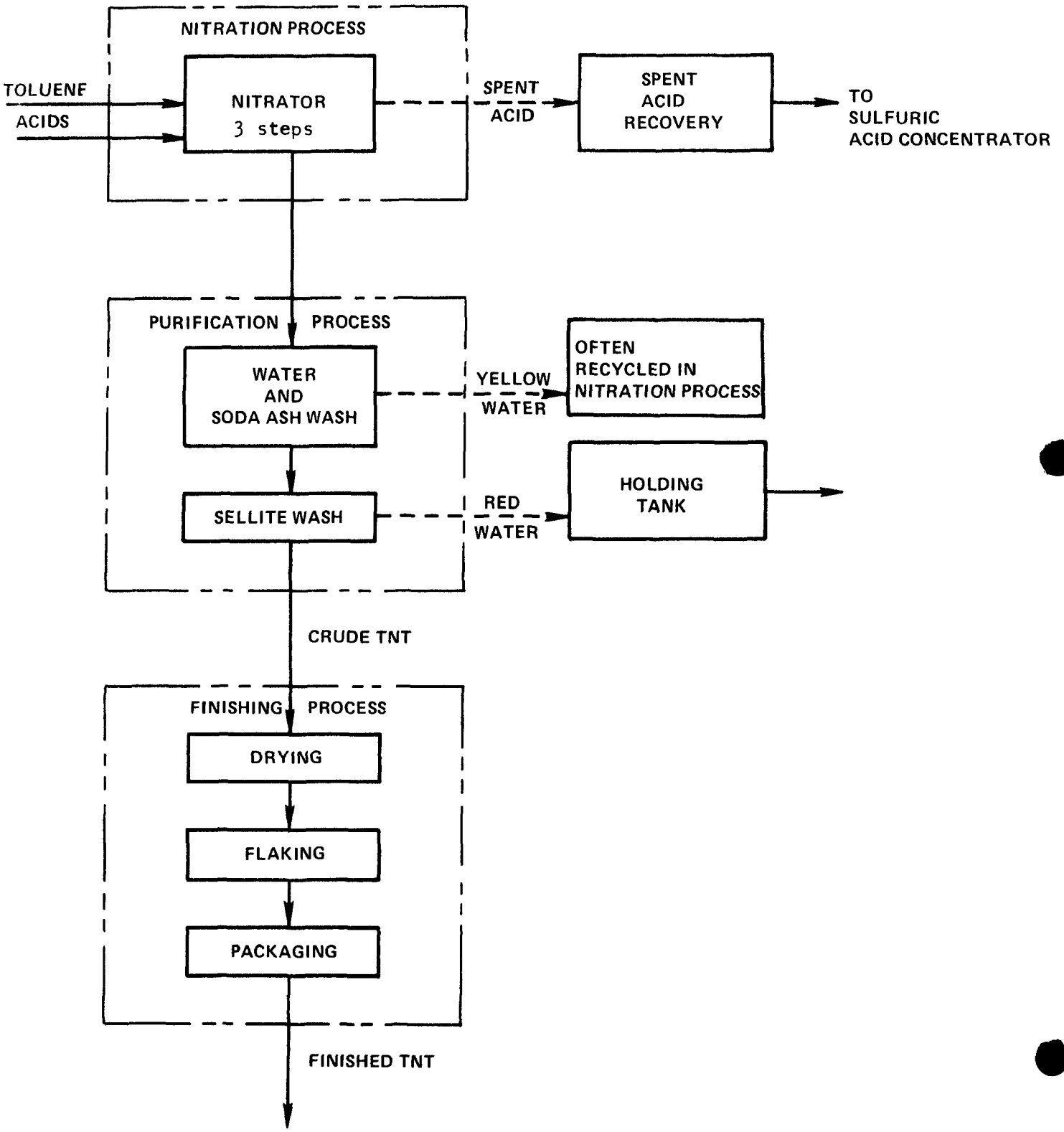

In the nitration process, acids (sulfuric and nitric) and toluene are combined in the nitrator to form raw TNT in three steps. The TNT is then sent to the purification process. In the purification process, the crude TNT is first subjected to water and soda ash washes which neutralize the excess acid and then to a sellite wash which reacts preferentially with the unsymmetrical (asymmetrical) isomers of TNT to remove them. The crude TNT is then sent to the finishing process.

Three important pollution problems associated with the manufacture of TNT are "red water", "Yellow water" and "Pink water" shown on Figure IVE-3. TNT in its purification is first washed with water. TNT is soluble in water up to 100 mg/L at ambient conditions. The exposure to sunlight or ultraviolet light cause the formation of highly colored, complex, substances similar to dyes. They impact a pink or yellow color to the water. Pink water can also occur in the LAP area by washing down kettles and other machinery. The product stream after the water wash is a mixture of TNT and unwanted isomers (about 4.5 percent). Removal of these isomers is through extraction by a sodium sulfite wash (sellite). The waste effluent producted is brick red or almost black color and is commonly called "Red Water". Currently none of the "Red Water" in any of the military plants is being discharged. It is either being sold for its sulfate content to paper mills or incinerated.

Cyclotrimethylenetrinitramine (RDX) and Cyclotetramethylene Tetranitramine (HMX)

Two of the most powerful explosives, RDX and HMX, are manufactured exclusively by the military sector of the industry. The processes for manufacturing RDX and HMX are essentially identical, except for the relative amounts of raw materials which are reacted. This can be seen in Figure IVE-4. In fact, some HMX is present in commercial grade RDX and vice versa. Acetic acid, hexamine acetic acid, ammonium nitrate, nitric acid, and acetic anhydride are reacted to form crude RDX or HMX. The crude material is then washed, recrystallized to the proper crystal size, filtered, blended with other explosives and dried. It is then packaged for shipment. Special ingredients like lacquers and waxes are sometimes blended and added.

Subcategory A2 - Manufacture of Propellants

The term "propellants" refers to a broad range of compounds. Propellants are classified as solvents or solventless, according to the use of solvent ingredients in the mixing operation. Solvent propellants are either single-base, double-base, triple-base or high energy. All solventless propellants are referred to as rolled powders.

FIGURE IVE-4

TYPICAL SCHEMATIC FOR RDX HMX PRODUCTION

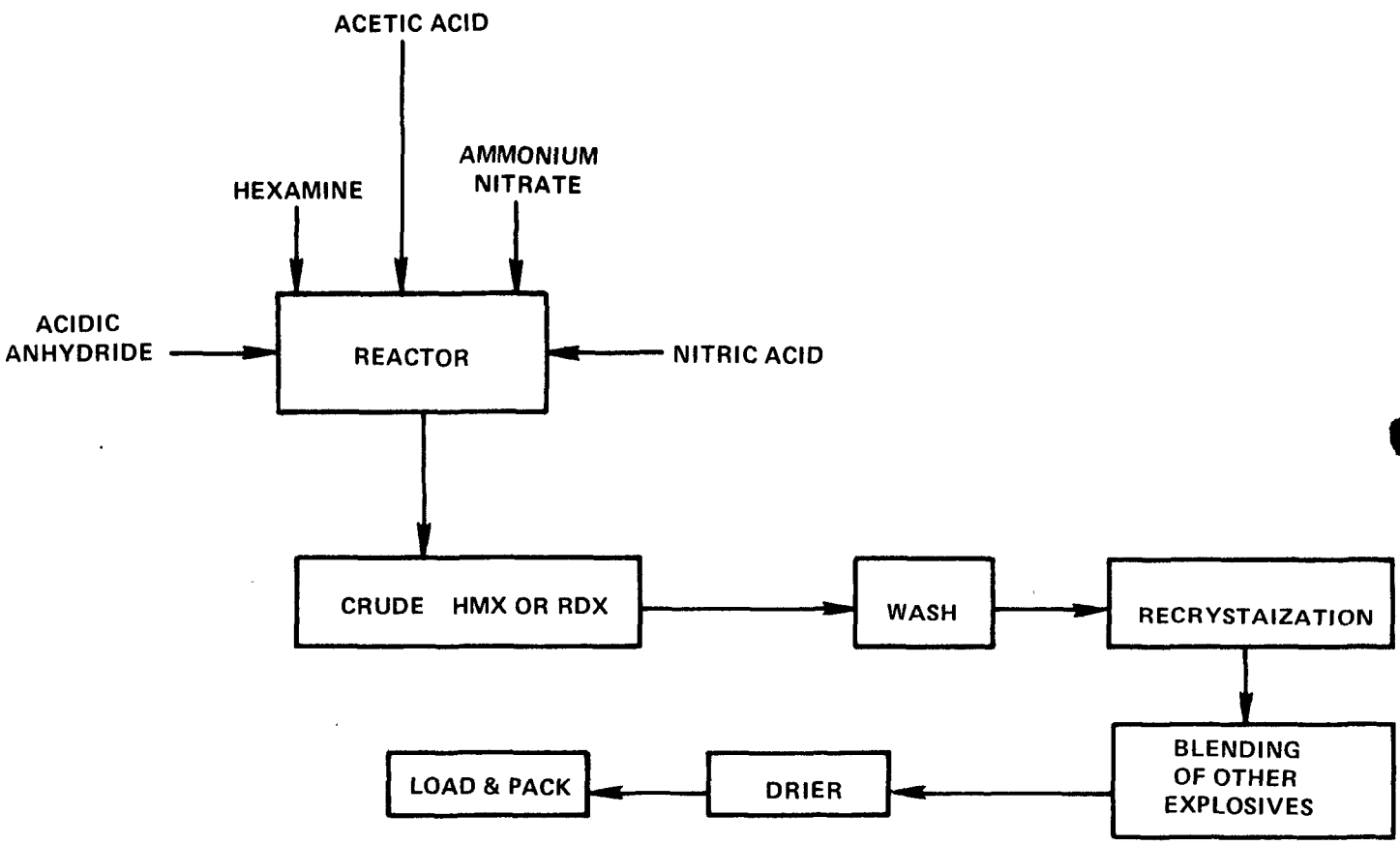

Differences in each kind of solvent propellant can be found in the specific chemicals and explosive ingredients added during the mixing operation. Most propellants use nitrocellulose as a base.

Nitrocellulose Powder

This powder (sometimes called smokeless powder), in its finished form, is the basic material for all types of propellants.

Figure IVE-5 presents an overall schematic of the finished NC manufacturing process. This process is divided into two integrated subprocesses, nitration and purification. Supplemental operations include kier boiling and bleaching and drying of cellulose fibers prior to nitration.

In the nitration process, acids (sulfuric and nitric) and cellulose (in the form of loosening fibers) are combined in the nitrator to form raw nitrocellulose (NC). The NC is dewatered and sent to the purification process. Purification is accomplished by boiling, beating and poaching the nitrocotton fibers in acidic and basic aqueous solutions.

Solvent Propellants

Figure IVE-6 shows a schematic diagram for the manufacture of solvent propellants. In the manufacture of single-base propellant, finished NC is sent to a mix house where it is mixed with solvents (alcohol and ether) and various other chemical ingredients. The raw propellant is then sent to a blocker house where it is screened and pressed into blocks. From the blocker house it is taken to the press and cutting house where it is pressed into strands and then cut to specified lengths. From here it proceeds to solvent recovery and drying and finishing steps.

In the manufacture of double- and triple-base propellants, finished NG is combined with finished NC in a pre-mix process and then sent to the "DEHY" process for mixing with solvents and other chemicals. In the mix house, nitroguanidine is combined with the NG-NC mixture, solvents and other chemicals to form triple-base propellants. High energy propellants require a separate blending process for the addition of ammonium perchlorate. Solvents used in multi-base and high-energy propellants include acetone and alcohol.

Solventless Propellants

The manufacture process of solventless propellants (rolled powder) is similar to the process for solvent propellants, but without the

FIGURE IVE-5

NITROCELLULOSE POWDER PRODUCTION SCHEMATIC

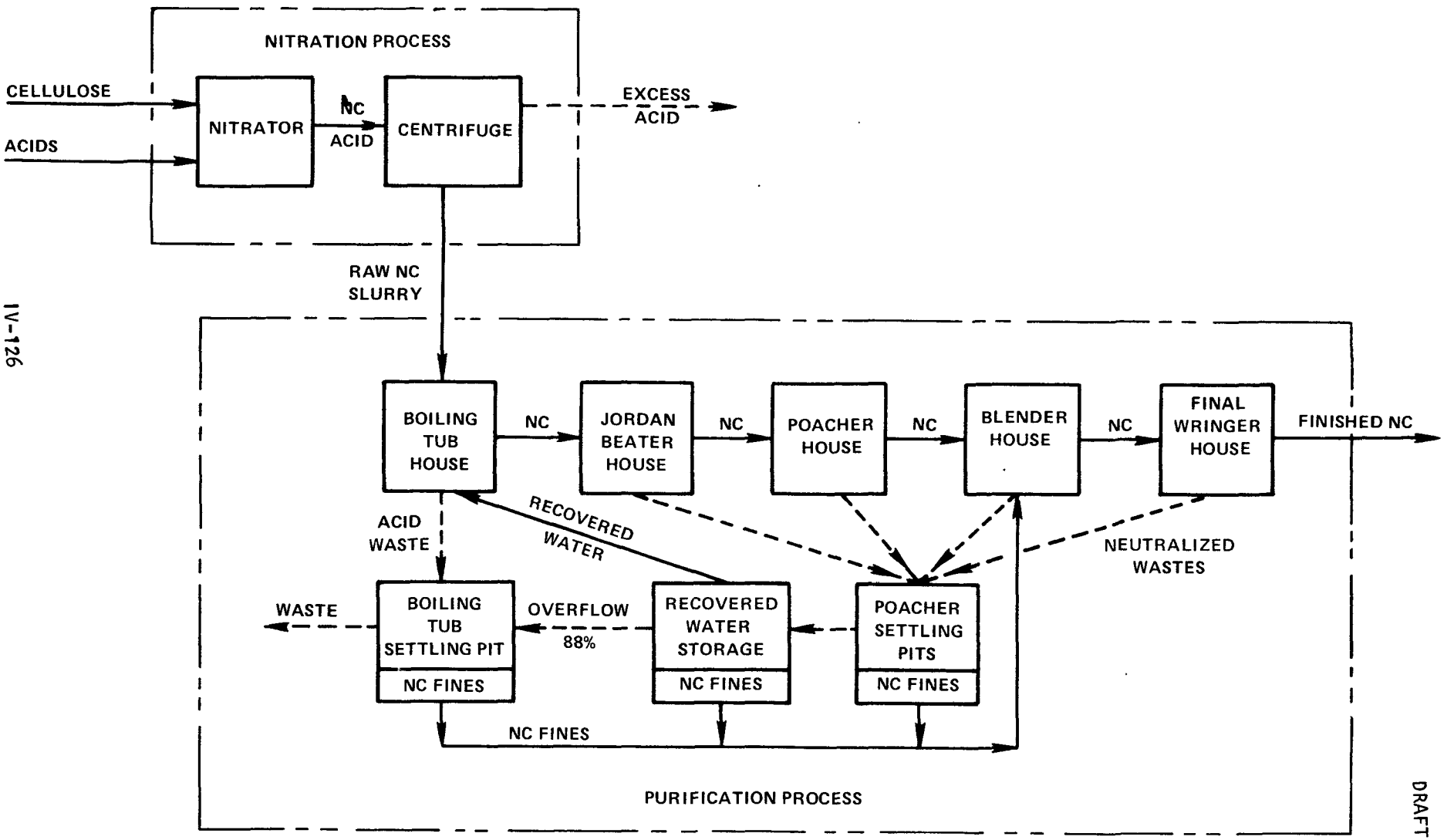

DRAFT

FIGURE IVE-6

SOLVENT PROPELLANT PRODUCTION SCHEMATIC

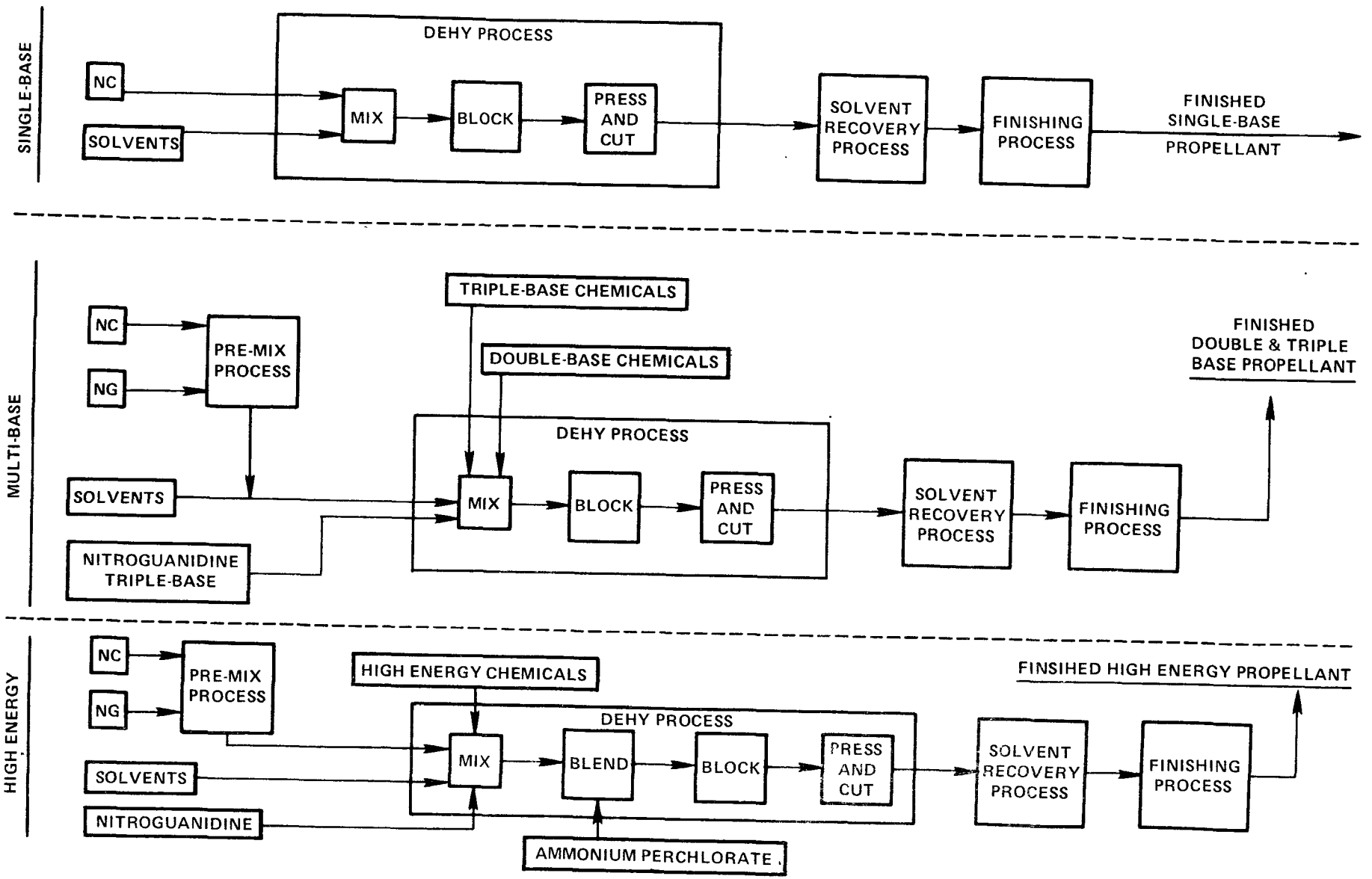

addition of solvents in the mix house. Propellants, after the addition of NG, air drying and temporary storage, are processed through a blender. From the blender, the powder is transported to a pre-roll process and then to a final roll process. The sheets produced from the rolling operations are cut and made into "carpet rolls" or otherwise shaped as desired. These products then undergo final processing preparation.

Subcategory B - Load and Pack Plants

Water Gels and Slurries

Water gel manufacture is a batch process involving mixing of ammonium nitrate, sodium nitrate and other ingredients listed in Table IVE-2 to form a semisolid product. Certain water gel formulations include proprietary supplemental components as explosive boosters. Guar gum is added to provide binding. The product is then bagged or shipped in bulk by truck for on-site injection. A gelling catalyst such as chromate is injected when water gel is used in bulk on-site. Bagged products do not incorporate the catalyst. The only wastewater sources from the manufacture of water gel are clean-up of spills, mixing equipment and bulk transport trucks.

Ammonium Nitrate - Fuel Oil (ANFO) Mixtures

ANFO is a mixture of ammonium nitrate prills and fuel oil, to which a variety of other minor ingredients (listed in Table IVE-3) may be added. ANFO is formulated by either a batch or continuous dry mixing operation, and the only wastewater source is the clean-up of spills and equipment. Occasionally the fuel oil (#2) is dyed before it is mixed with ammonium nitrate to identify specific formulations. The product is bagged in paper, plastic or burlap, depending upon its intended use.

Nitrocarbonitrates (NCN)

These explosive products are similar in composition and manufacture to ANFO. In addition to or in place of fuel oil, the product may also contain mineral oil. Carbonaceous material, aluminum powder and dinitrotoluene (DNT) are also common ingredients. The formulation is a dry batch mix, with wastewater restricted to clean-up of spills and equipment.

Additional Load and Pack Processes

Additional load and pack processes involve filling blasting caps or shells with highly sensitive explosives. In addition, primers use large amounts of water since they are loaded wet.

Table IVE-2

Ingredients of Water Gels and Slurries

Typical Ingredients	Optional Ingredients
Ammonium Nitrate	Fuel Oil
Sodium Nitrate	Aluminum Powder
Guar Gum	Smokeless Powder
Water	Nitroglycerin
Gelling Agents	Trinitrotoluene
Fumaric Acid	Proprietary Agents
Ethylene Glycol	Carbon Fuel
Ammonium Sulfamate	

Table IVE-3

Ingredients of ANFO Explosives

Ammonium Nitrate	Fuel Oil
Ferrophosphate	Aluminum
Calcium Silicate	Coal
Atticote	Mineral Oils

Subcategory C - Specialty Plants

Pentaerythritol Tetranitrate (PETN)

Figure IVE-7 provides a schematic of PETN production. The pentaerythritol is nitrated with concentrated nitric acid, and PETN separated in a centrifuge, after which the spent acid is recovered. The PETN cake is mixed with water, and the slurry is filtered to removal residual acid. The crystalline PETN is then dissolved in acetone, with sodium carbonate added to further neutralize residual acidity. After graining with water, the slurry is again filtered, and the granular PETN taken to storage. The acetone-water filtrate is digested with sodium hydroxide at pH 10 to destroy residual PETN, and the acetone recovered by distillation. Still bottoms are discharged as wastes.

Lead Azide

Figure IVE-8 provides a schematic of lead azide production. Sodium azide is mixed with water and dextrinate to form a precipitate of lead azide, which is then separated from the wastewater. Frequently, dissolved lead azide in the wastewater will lead to an additional step where nitric acid, sodium nitrite and soda water are added to precipitate any additional lead previously in solution.

Nitromannite (HNM) and Isosorbide Dinitrate

Figure IVE-9 provides a schematic of HNM or isosorbide dinitrate production. Mannitol, a powdered solid, is fed into an agitated mixture of sulfuric and nitric acids in a nitrator. After the nitration phase is completed, the liquid mixture, composed essentially of suspended nitromannite and spent acids, is drawn down into a drowning vessel which contains water.

From here the suspension is drawn into and washed into a centrifuge. The solid material is retained on a cloth filter and is washed acid free. The spent acid and wash waters pass through a catch tank and are neutralized.

The solid nitromannite from the centrifuge is dissolved in acetone. A small amount of chalk is added to neutralize the solution. It is allowed to separate into layers. The water layer is drawn off through the same catch tank described above. The acetone layer is diluted with water in a continuous precipitator to form a slurry which is filtered and then washed. The acetone water mixture and the filtrate wash waters are collected for processing through a still for acetone recovery. Solid material collected at the catch tank is periodically collected and burned.

FIGURE IVE-7

TYPICAL PETN PRODUCTION AND ACETONE RECOVERY SCHEMATIC

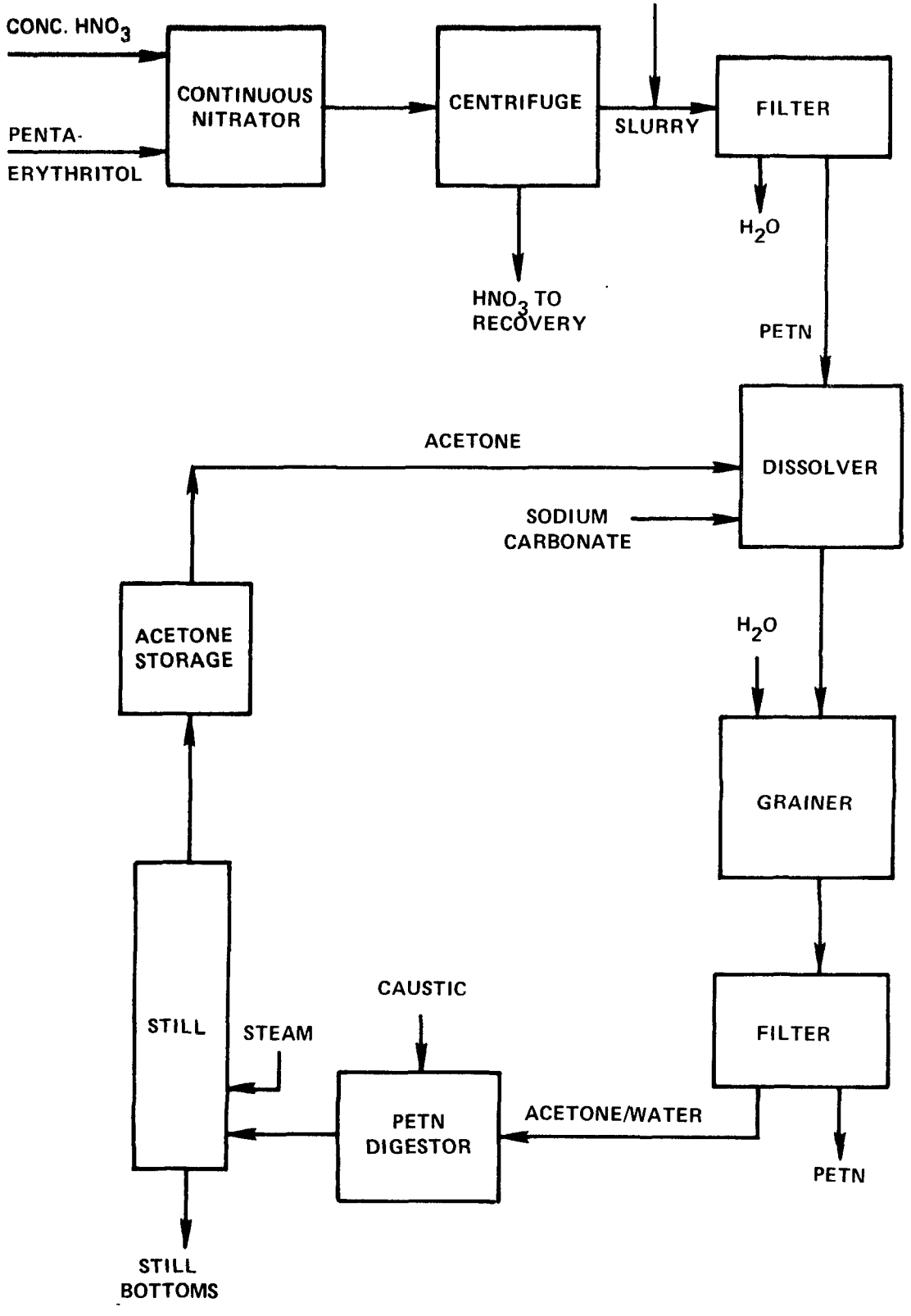

FIGURE IVE-8

TYPICAL LEAD AZIDE PRODUCTION SCHEMATIC

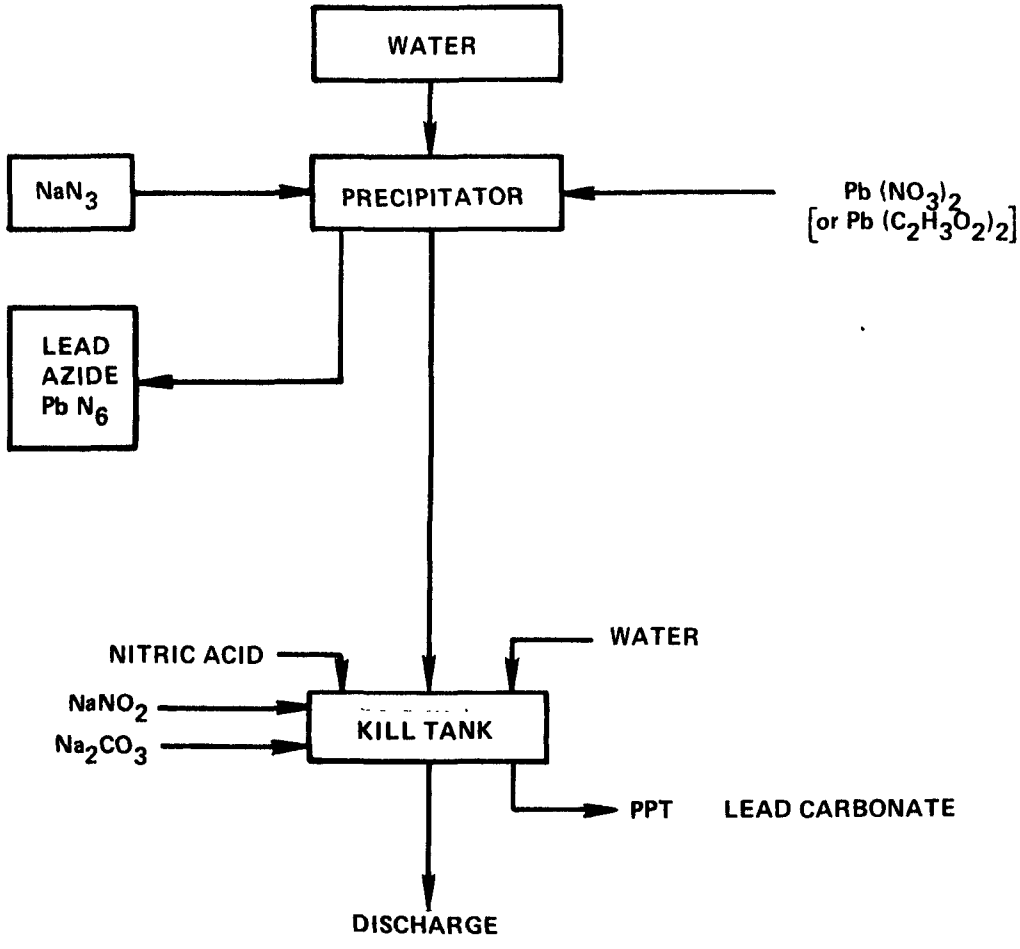

Primer Explosives

Several less freqeuntly used types of explosives form the raw materials for primer explosives and are used primarily in small arms ammunitions. Examples of these explosives are lead styphnite and tetracene. They are combined, along with other chemicals, to form the primer explosives.

Tetyl

Tetryl (Trinitrophenylmethylnitramine) is chiefly used as a base charge in blasting caps, as the booster explosive in high explosive shells and as an ingredient of binary explosives. Nitric acid, sulfuric acid, and DMA (dimethylaniline) are the raw materials in its manufacture. The major steps in production are nitration of DMA to tetryl, refining the product, drying and packaging.

Basis of Assignment of Subcategories

The subcategories chosen are intended to encompass the entire Explosive industry. They include both military and commercial explosives and propellants. Although there are some differences, both in volume and product, between the military and commercial industries, their waste loads are equivalent. For example, the load and pack subcategory in the commercial explosives averaged .973 lb COD/ton explosives handled, while the military explosives averaged .253 lb COD/ton explosives handled, with a range of .727 to .003.

Explosive plants sometimes manufacture additional products besides explosives. Fertilizer or raw materials for the manufacture of explosives (such as sulfuric and nitric acid) have been excluded from this subcategorization, since it is anticipated that they will be covered under other effluent limitation guidelines. Considerable effort was spent in segregating these sections to produce an unambiguous set of effluent limitation guidelines for the Explosives industry without contradicting any other industrial guidelines.

It is anticipated that no single plant will fall under only one of the subcategorizations developed. Plants that fall into more than one subcategory will have to conform to effluent guidelines for each category. If a plant chooses to combine its wastes from two subcategory areas in a treatment center, then total plant effluent limitation guidelines should be calculated according to the method presented in Section IX.

FIGURE IVE-9

TYPICAL NITROMANITE OR ISOSORBIDE DINITRATE PRODUCTION SCHEMATIC

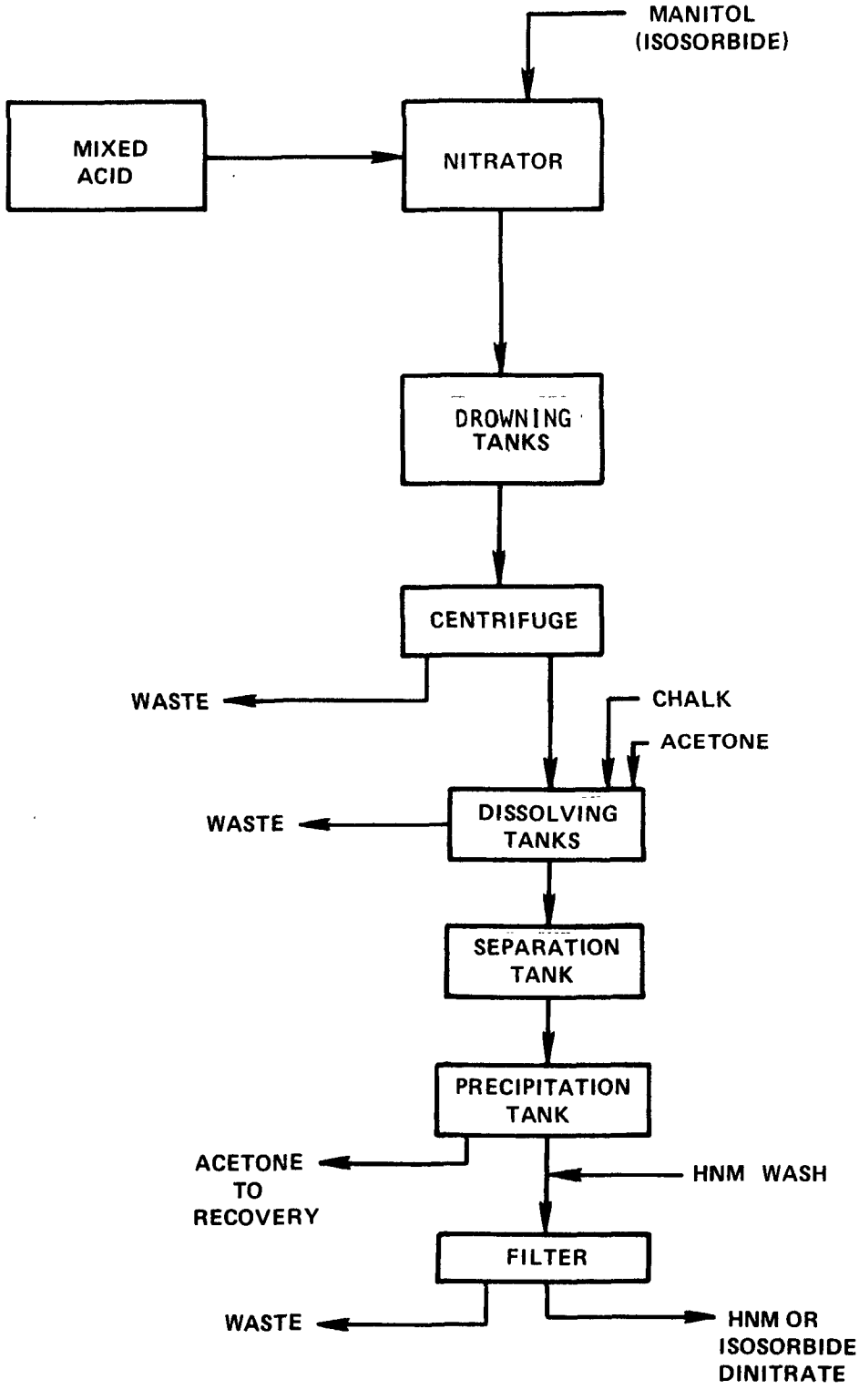

FIGURE IVE-10

TYPICAL LEAD MONONITRORESORCINATE PRODUCTION SCHEMATIC

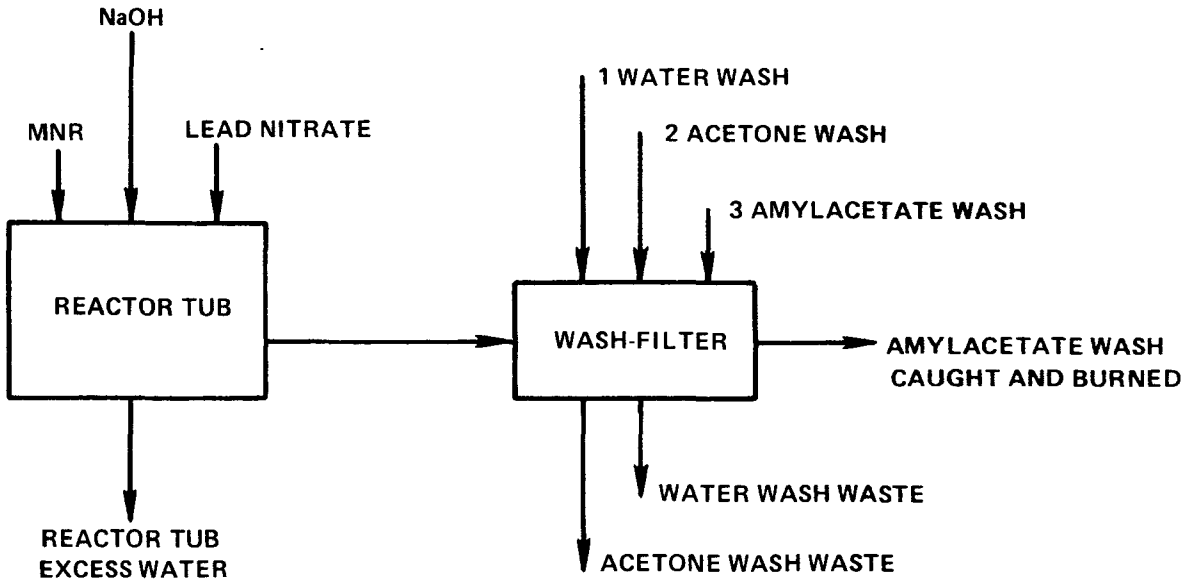

DRAFT

F. Carbon Black Industry

Discussion of the Rationale of Categorization

Industry subcategories were established so as to define those sectors of the Carbon Black industry where separate effluent limitations and standards should apply. The distinctions between the subcategories have been based on the wastewater generated, its quantity, characteristics, and applicability of control and treatment. The following factors were considered in determining whether such subcategorizations are justified:

Manufacturing Process

The manufacturing processes used to manufacture carbon black consist of the furnace, thermal, channel, and lamp black processes. The final product from each of these processes is carbon black, differing only in particle size and structure.

Furnace black is produced by the incomplete combustion of hydrocarbons. This process is a net user of water and generally has no process contact wastewaters.

Thermal blacks are produced by cracking of natural gas to form carbon and hydrogen gas. The major wastewater source from this process is the blowdown from a recirculating dehumidifier system.

Channel black is produced by impingement of under-ventilated natural gas flames on moving, continuously scraped channels.

Lamp blacks are manufactured by the burning of petroleum or coal tar residues in open shallow pans.

Product

The Carbon Black industry manufactures a single product. Therefore, subcategorization by product basis was not considered.

Raw Materials

The raw materials consumed in the manufacture of carbon black consist of hydrocarbons. Liquid hydrocarbons are used in the furnace process. The most desirable feed stock oil for the furnace process comes from near the bottom of the refinery barrel and is similar in many respects to residual fuel oil. It is low in sulfur and high in aromatics and olefins.

The raw material used in the manufacture of thermal black is natural gas.

Plant Size

Based upon process considerations, the plant size, measured in terms of production, should be directly related to the pounds of pollutants produced. This same relationship should also be true for the quantity of wastewater generated. The amount of quench water required to cool the process stream should be directly related to the size of that process stream.

Plant Age

The age of a plant apparently has no significance in the characteristics of a plant's wastewater. This is assuming that the plant's separation techniques have been upgraded from cyclones and wet scrubbers to bag filters. This has generally been done because of the higher yields obtainable with bag filters.

Plant Location

Inspection of carbon black plants in various geographical areas of the country indicates that location has little effect on the quality or quantity of the process wastewater streams. The areas inspected included the South (both north and south Texas) and the East (West Virginia).

Geographical location does have an effect on the use of ponds or cooling towers. Areas with a large net evaporation are more suitable for ponds. Storm water is a significant factor in the use of ponds.

Housekeeping

Plant housekeeping is a factor that was considered when comparing the various plants visited. Good housekeeping is important to the industry because a loss of yield can be associated with poor housekeeping. Because of this consideration, the Carbon Black industry seems to practice relatively good housekeeping.

Carbon black spills were dry vacuumed, rather than washed down, in all of the plants visited. Therefore, housekeeping is generally not a factor in wastewater quantities and characteristics.

Air Pollution Control Equipment

In the past, air pollution control equipment had a significant impact upon wastewater quantities and characteristics. Cyclones and wet scrubbers were used to remove the carbon black from the process stream. However at present, the industry universally uses bag filters for this purpose. Therefore, air pollution control equipment no longer has an impact.

Nature of Wastes Generated

The furnace black and thermal black processes have been examined for type of contact process water usage associated with each. Contact process water is defined to be all water which comes in contact with chemicals within the process and includes:

1. Water required or produced (in stoichiometric quantities) in a chemical reaction.

2. Water used as a solvent or as an aqueous medium for reactions.

3. Water which enters the process with any reactants or which is used as a diluent (including steam).

4. Water used as an absorbent or as a scrubbing medium for separating certain chemicals from the reaction mixture.

5. Water introduced as steam to strip certain chemicals from the reaction mixture.

6. Water used to wash, remove, or separate chemicals from the reaction mixture.

7. Water associated with mechanical devices, such as stream-jet ejectors for drawing a vacuum on the process.

8. Water used as a quench or direct contact coolant such as in a barometric condenser.

9. Water used to clean or purge equipment used in batch type operations.

Noncontact flows which were not considered include:

1. Sanitary wastewaters
2. Boiler and cooling tower blowdowns or once through cooling water.
3. Chemical regenerants from boiler feed water preparation.
4. Stormwater runoff from non-process plant areas, e.g., tank farms.

An evaluation of the furnace process showed that the process wastewater source is the quench water used to cool the process stream. However, all of this water is vaporized and vented to the atmosphere as steam.

The thermal black process also uses quench water to cool the product. However, in this process, this water is condensed through further water sprays in the dehumidifier and is usually recycled.

Based on these considerations, the nature of the wastes generated could form a basis for subcategorization.

Treatability of Wastewaters

The treatment technology applied throughout the Carbon Black industry is gravity settling. Settling ponds are the primary form of gravity settling demonstrated. However, some structural gravity settling devices were found.

Summary of Considerations

For the purpose of establishing effluent limitations, guidelines and standards the Carbon Black industry should be divided into two subcategories. This subcategorization was based on distinct differences in manufacturing processes and the nature of the wastewater generated by each process. The two selected subcategories are:

Subcategory A - Furnace Black
Subcategory B - Thermal Black

As discussed in Section III, these two manufacturing processes are, in fact, the only ones of significance in the United States.

Description of Subcategories

Sub-Category A - Furnace Black Process

This subcategory consists of carbon black manufacture by the furnace process. The process is a net user of water; water is not required as a reactant and is not formed as a reaction product. Process raw waste loads should approach zero, with variations caused only by intermittent equipment washdown.

Sub-Category B - Thermal Black Process

This subcategory consists of carbon black manufacture by the thermal process. Process water in the thermal process consists of direct contact quench water. It appears feasible to reduce process waste loads to nearly zero through increased recycle of contact quench water in this subcategory.

Process Descriptions

Sub-Category A - Furnace Black Process

The furnace black process produces carbon black from the incomplete combustion of hydrocarbons, usually oil.

Oil is supplied to the process oil storage. The oil is usually preheated in a heat exchanger prior to firing the reactors to recover some of the waste heat from the reactor. Also, preheated air may be supplied to the reactor for partial burning of the fuel. The particle size of the carbon black is controlled by the air supply.

Carbon black particles are formed in refractory-lined reactor units designed for the incomplete burning of the fuel oil. The carbon black particle is formed in this unit. The reactor temperature is approximately 3200°F. (Reactor design configurations are generally the major area of difference between manufacturers and production processes.)

The combustion products (gases and carbon black) pass through the air preheater (at approximately 1100°F.) and an oil preheater (at approximately 800°F.). In-line water sprays cool the gas carbon black stream. The combustion products then pass through a quench tower where water sprays further cool the stream to approximately 400°F. All quench water is vaporized and vented to the atmosphere.

The carbon black particles are filtered from the "quenched" gas stream by passing through baghouses. The captured carbon black is collected in hoppers below the baghouse and passed through a micro-pulverizer to a pelletizer. Water is added to the "fluff" and it is agitated and mixed to form pellets with a higher density. The "fluff" has a density of approximately 2 pounds per cu. ft., whereas the pellets have a density of approximately 20 pounds per cu. ft.

The wet pellets are then dried in a rotary external fired direct/indirect dryer. The indirect exhaust gases from this drier are vented to the

atmosphere and the direct (contact) gases are exhausted to a bag filter. The dried carbon black pellets are then conveyed to storage and or bulk loaded. A simplified process flow diagram is shown in Figure IVF-1. No contact process waste streams are generated by this process. Good housekeeping and/or roofing over the process areas will minimize stormwater runoff contamination.

Sub-Category B - Thermal Black Process

The thermal black process produces carbon black by the "cracking" of hydrocarbons (i.e., separation of the carbon from the hydrogen). The feed stock is generally natural gas. Thermal furnaces are built in checkerboard brickwork patterns.

Each thermal black unit consists of two reactors. To make the operation continuous, one reactor is automatically switched to a heating cycle while the other is producing carbon black. The reactor refractory is heated by separating the carbon black from the hydrogen gas in a bag filter and returning and burning the hydrogen gas in the reactor that is in the "heat" cycle.

Each reactor consists of a firing zone and a cracking zone. The cracking zone contains refractory brick which stores the heat required to crack the natural gas into carbon and hydrogen. Natural gas is injected into the top of the unit. The energy supplied by the heated refractory brick cracks the natural gas to thermal black and hydrogen gas. This mixture leaves the reactor at a relatively high temperature and at an increased standard volume and enters the quench section of the reactor, where the temperature of the reaction products is decreased by adding water. Because the temperature at this point is still much higher than the boiling point of water, the quench water is converted into steam.

The cooled reaction products flow through a vertical cooler where additional quench water is added for further cooling. The temperature at this point is still excess of the boiling point of water, and therefore the quench water is converted to steam.

From the vertical cooler, the reaction products enter the bag filter, where the thermal black is separated from the hydrogen gas. The filtered thermal black falls into a conveyor beneath the bag filter. The filtered hydrogen gas and water vapor pass through a water seal (to prevent explosions) into a dehumidifier. Water sprays in the dehumidifier cool the reformed gases below the boiling point of water, removing most of the moisture. Water collected in the dehumidifier flows to the hot well where it is cooled and transferred to the cold well. It is then

FIGURE IV F-1

PROCESS FLOW SHEET

FURNACE BLACK PROCESS

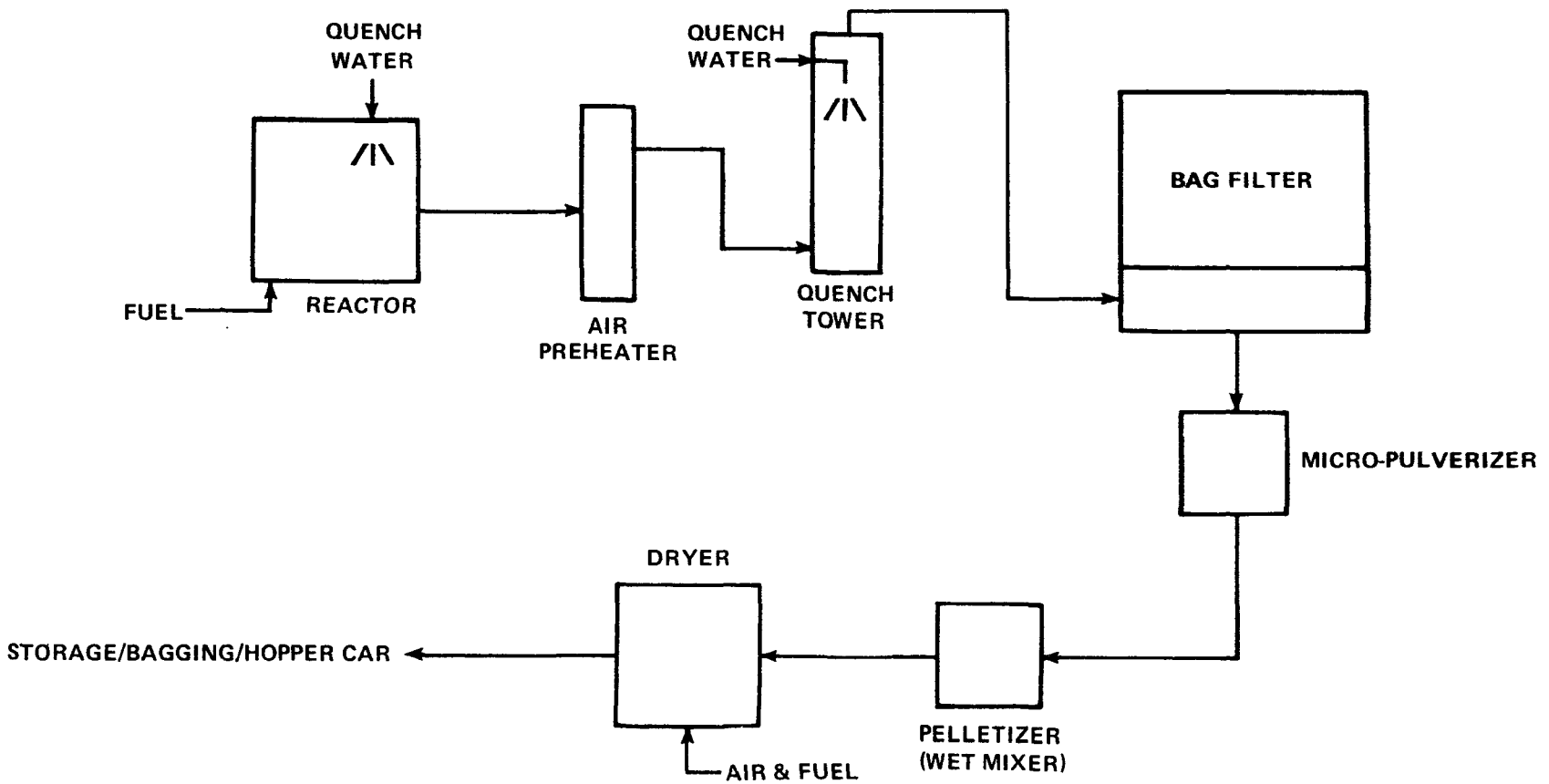

DRAFT

used to supply the sprays in the dehumidifier. The gases leaving the dehumidifier are in excess of the amount required to heat the reactor and the excess is vented.

The loose thermal black is collected under the bag filter in a closed screw conveyor and conveyed to a micro-pulverizer. The micro-pulverizer breaks up large agglomerations of thermal black and small pieces of refractory which may be present. The loose black from the micro-pulverizer is pelletized to make it more suitable for handling. The pelletized black is directly conveyed to a hopper car for shipment or conveyed to bulk storage. The black can be loaded into hopper cars or bagged from bulk storage.

Figure IVF-2 is a simplified flow diagram illustrating the thermal black product. The flow diagram shows a single unit with its two reactors.

The major RWL's for this process are summarized below:

Waste Stream	Flow L/kkg	TSS kg/kkg
Dehumidifier Cooling Tower Blowdown	721	0.089

The dehumidifier cooling tower (cooling pond) blowdown is the only definable wastewater discharge from the thermal process. The ways in which the recirculated dehumidifier is handled may vary depending upon company practice, plot location, etc. Cooling ponds are sometimes employed rather than cooling towers, depending on the same considerations.

Good housekeeping and/or a roof over the process areas will minimize the stormwater runoff contamination.

Basis for Assignment to Subcategories

This subcategorization assigns carbon black products to a subcategory by the manufacturing process by which they are produced. It should be noted that only two carbon black manufacturing processes were subcategorized. Other processes exist, but either on a very limited scale or not at all, in the United States.

Field sampling was not performed at the plants visited because of the nature of the processes subcategorized. They either had no discharge, or the discharge was intermittent, consisting of occasional equipment washdowns or other incidental flows.

FIGURE IV F -2

SIMPLIFIED FLOW SHEET
THERMAL BLACK PROCESS

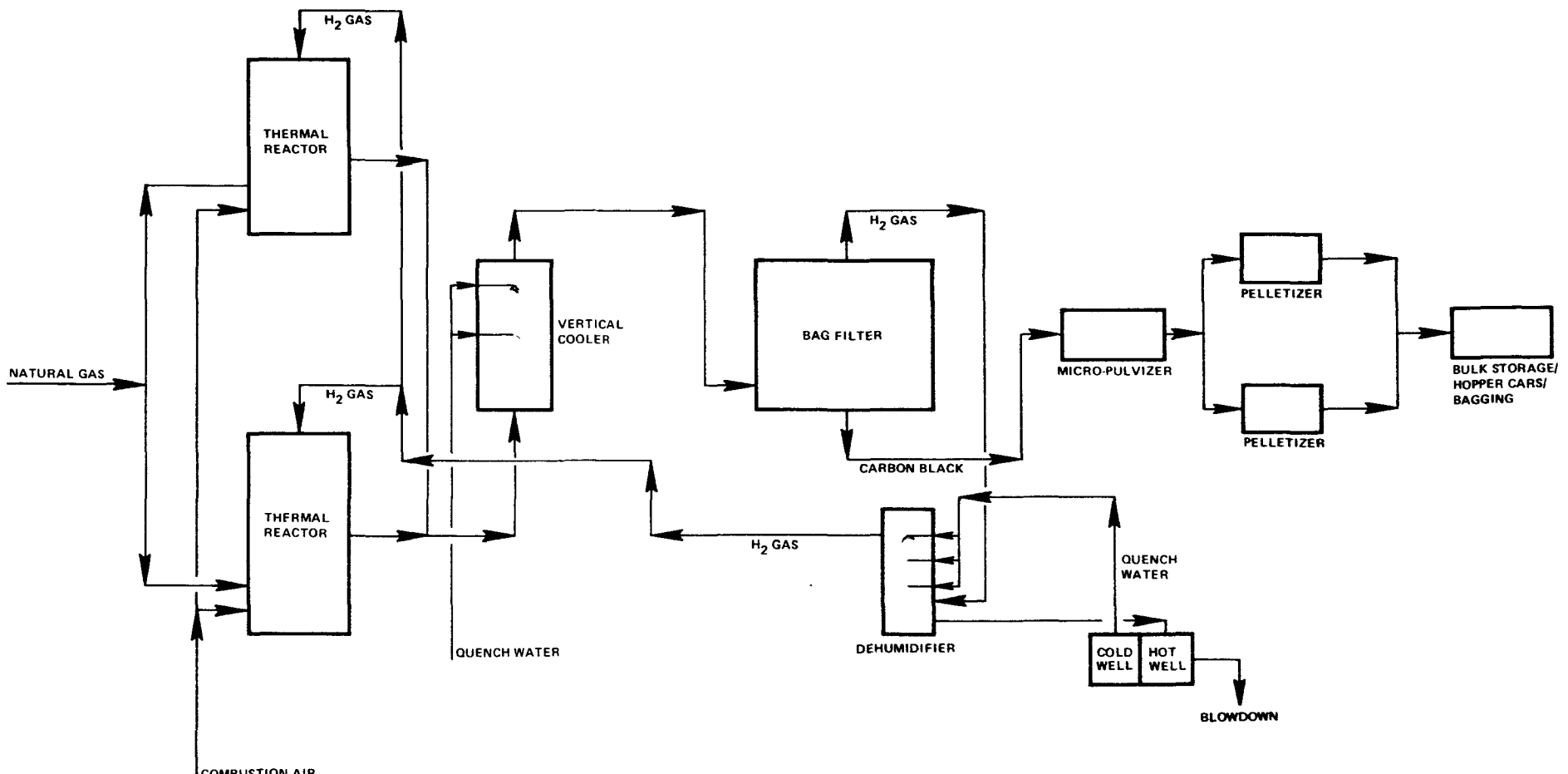

DRAFT

G. Photographic Processing Industry

Discussion of the Rationale of Categorization

The Photographic Processing Industry serves the photographic trade and general public in the developing of films and in photoprinting and enlarging. The following factors were considered to determine whether a subcategorization of the industry and the establishment of separate effluent limitation guidelines for different segments of the industry were justified.

Plant Type

Photographic processing laboratories differ in the services they provide. Among the estimated 12,500 processing plants in the United States, approximately 3,000 are amateur operations, 3,000 are "captive" laboratories in business and industrial firms, 650 are major labs specializing in work for professional and industrial photographers, and the remaining plants are portrait and commercial studios (G-2).

Plant Size

Photoprocessing laboratories range in size from the small amateur operation to the major professional laboratory which may produce as much as 25,000 square feet of film and paper daily.

Plant Location

Plants are located mostly in urbanized areas throughout the country. The three plants visited were located in Michigan, Massachusetts and Texas.

Products

The products produced by the industry are finished color and black and white films and prints. Most large plants process both color and black and white materials; however, one plant visited produced only color products.

Plant Processes

There are a wide variety of photoprocessing machines used to finish a specific film or paper. These may be either the continuous or "rack and tank" or "dip and dunk" operations.

Wastewater Characteristics

Because of the high production of both color and black and white products, large volumes of wastewater are discharged during the process. These process wastewaters include both photoprocessing solution overflows and washwaters; together, these spent waters are high in BOD, COD, TOC, TDS, silver and complexion cyanide. Generally, the pollutants of significance are the same for both color and black and white photofinishing operations with the exception of ferrocyanide which is generated during the bleaching step in color development. Sufficient data is not available to establish the variability in treatability of the wastewaters.

Summary of Considerations

Data was collected on both color and black and white processes at three different plants identified as Plants 32, 33 and 34. These plants varied in size by production, flow rate, and geographic location, as shown in the following tabulation:

Plant No.	Average Daily Production sq ft	Average Flow Rate gpd	Location
32	19,300	62,600	Michigan
33	22,400	67,900	Massachusetts
34	13,300	34,900	Texas

Based on the total quantity of production, measured in square feet of product, pollutant loadings from the color and black and white processes compare well in order-of-magnitude. The raw waste loads are fairly uniform throughout the industry in color and black and white operations because of the standardization of processes within the industry. Because of this uniformity, subcategorization of the industry for the development of effluent limitation guidelines could not be justified. The Photographic Processing industry is treated as a whole for the purposes of this document, and any analyses and regulations which are developed will be applicable to the whole industry. Separate discussions of process types have, however, been presented for a more thorough understanding of the industry.

Process Descriptions

Most commercial photoprocessors handle many square feet of film and paper with automatic processing machines. The basic machines are called the "dip and dunk" or "rack and tank" types, which consist of a series of tanks with each tank containing photoprocessing solutions. These solutions impart the desired effect on the film or paper in each progressive step of development. Continuous length processors

are used by most large firms, and roller transports are used in graphic arts and for hospital X-ray films.

During photoprocessing, many changes occur within the processing solutions. Because of these changes, the chemicals used in photoprocessing need to be replaced, strengthened or replenished. Developing agents become oxidized and exhausted; developer activators and preservatives wear out; anti-foggants become used up; bromides or other halides resulting from the reduction of the silver by the developer become more concentrated; acid short stops become neutralized; and the removal of silver from the emulsion causes increased concentrations of silver in the fixers or hypo baths. Chemicals are added to maintain the correct chemical strength and photographic properties. When replenisher is added, its volume must be sufficient to cause enough overflow of the unwanted by-products. Overflows from the processing tanks caused by the addition of replenishers and wash water overflows are the two sources of effluent from photoprocessing.

Black and White Film

General

Black and white film consists of a foundation layer, which is coated with a light-sensitive emulsion and an outer protective layer. Silver halide salts, made up of positively charged silver ions and negatively charged bromide ions are among the chemicals contained in the emulsion. When radiant energy from light strikes the crystal, a dislodged electron from the bromide ion is captured by a silver ion to form metallic silver. The metallic silver clusters together on the film surface and a latent image is formed. This image is made visible by a step in photoprocessing called development. Two development processes are used in industry: the two-step negative-positive process and the one-step reversal process.

Negative-Positive Process

The silver bromide crystals in the gelatin emulsion are bathed in a chemical solution called a developer, which causes the visible image to form. The developer solution contains developing agents, activators, preservatives, restrainers, anti-foggants, and water conditioners. In general, the developing agents for black and white photography are aromatic compounds(for example, hydroquinone).

After the photographic material has been developed to the desired amount, the developing process must be stopped. This is normally done by treatment in an acidic solution called a short stop, which

neutralizes the basic activators of the developer and conditions the emulsion for future processing steps. Sometimes plain water is sufficient for a stop bath. After stopping the action of the developer, the unexposed and undeveloped silver must be removed from the emulsion. This is done not only to make the image more visible and the film more transparent, but to prevent the remaining unused silver from eventually being reduced to metallic silver by the action of light. There are a number of solvent fixers, including sodium thiosulfate, ammonium thiosulfate, and sodium thiocyanate. Following fixation, photographic materials are washed and dried. The process flow diagram for black and white film is shown in Figure IVG-1.

FIGURE IVG-1

BLACK AND WHITE FILM PROCESSING

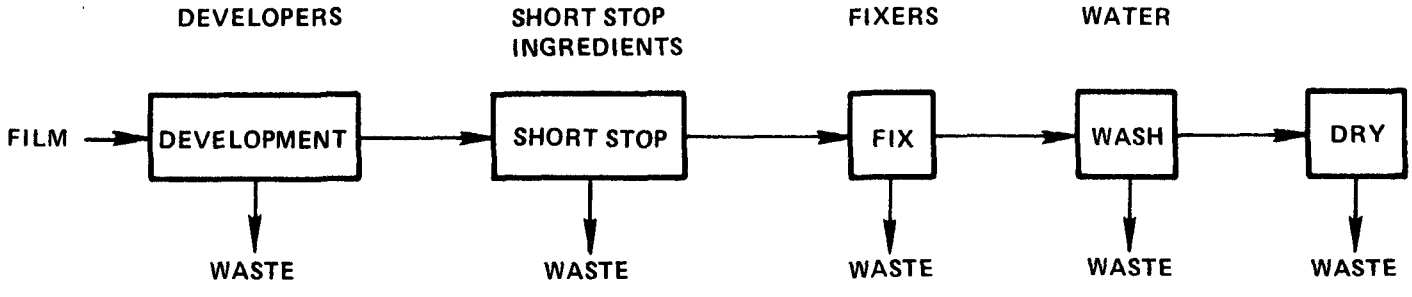

The quality of effluent wastewaters from black and white film development are relatively uniform throughout the industry and are characterized by high concentrations of hydroquinone in the developer waste; sulfates and sulfites in the stop bath waste; and acetates, sulfites and silver thiosulfate complex in the fixer waste. The major pollutants which contribute to BOD are acetates, sulfites, and thiosulfate. Other wastes are generated during the processing; these pollutants, however, vary in type and concentration depending upon which photoprocessing operation is employed.

Once the black and white negative has been fully processed and is allowed to dry, the negative is converted to a positive paper print by the black and white paper process. The process begins by directing

a controlled exposure of light onto the negative, thereby creating a positive image on the paper, which has an emulsion layer similar to black and white film. The latent image formed is then developed, using different chemicals from those used in the film development process. However, effluent wastes from the paper process are similar in type to the wastes in the film development process, although the concentrations are usually higher.

Reversal Development

This is a method for obtaining a positive image on the same film used for the original exposure. The exposed film is first fully developed to a negative. The film is then washed and the silver image removed by bathing in an acidic permanganate or dischromate bleach bath. A clearing bath (for example, bisulfite) is used to remove the bleaching agent and reaction products; the film is then given a uniform controlled exposure of light, and is developed a second time. As an alternative to the second exposure, a highly fogging developer or nonselective reducer may be used for the second development. The process continues as in other black and white processes with a wash, fix, final wash and dry. Reversal development is often used in processing amateur and 16-mm motion-picture film. Effluent wastes in reversal processing are similar to other black and white film processing wastes, except that acetate and bromide are generated during negative removal by the addition of dichromate bleach. The process flow diagram for black and white reversal film is shown in Figure IVG-2.

FIGURE IVG-2

BLACK AND WHITE FILM PROCESSING

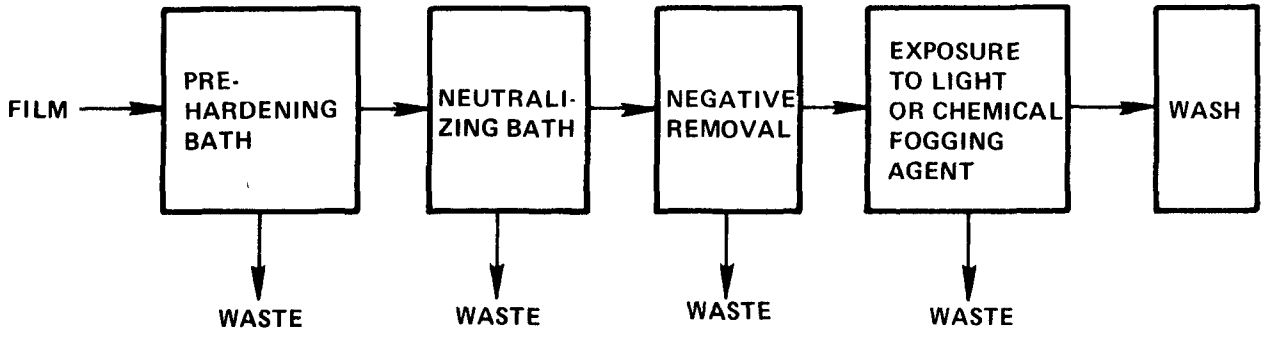

Color Film

General

In black and white photographic materials, the emulsion is sensitive to wavelenghts of light up to visible blue light. However, certain organic compounds can be included in the emulsion to extend the wavelength sensitivity of the silver grains. The silver grains then become latent images when exposed to green or red light. Color film has three separate light-sensitive layers which record an image of the blue light components on one layer, the green light components on another and the red light components on a third layer.

Negative-Positive Development

Color developer agents are generally N, N-dialkyl-p-phenlyene-diamines whose reaction products react with a group of organic molecules called couplers to form dyes. The oxidized components of this special category of developers form colored dyes in the film emulsion layers with the incorporated color couplers. Frequently a stop bath follows the color developer step. As in black and white film processing, metallic silver is formed in color film upon exposure to light. However, in color film processing the silver image which is formed with the dye is converted back to silver halide by reactions with one of several complex iron compounds and a halide. Either ferricyanide with sodium bromide or ferric ammonium ethylenediamine tetracetic acid (ferric EDTA) with ammonium bromide is commonly used. Continuing the procedure of removing the unwanted silver image after the bleaching step, the film is treated in a fixer or hypobath. The film is then washed to remove residual processing chemicals and dried. Films of this type include Kodacolor and Agfa CNS. The process flow diagram for color film development is shown in Figure IVG-3.

FIGURE IVG-3

COLOR FILM PROCESSING

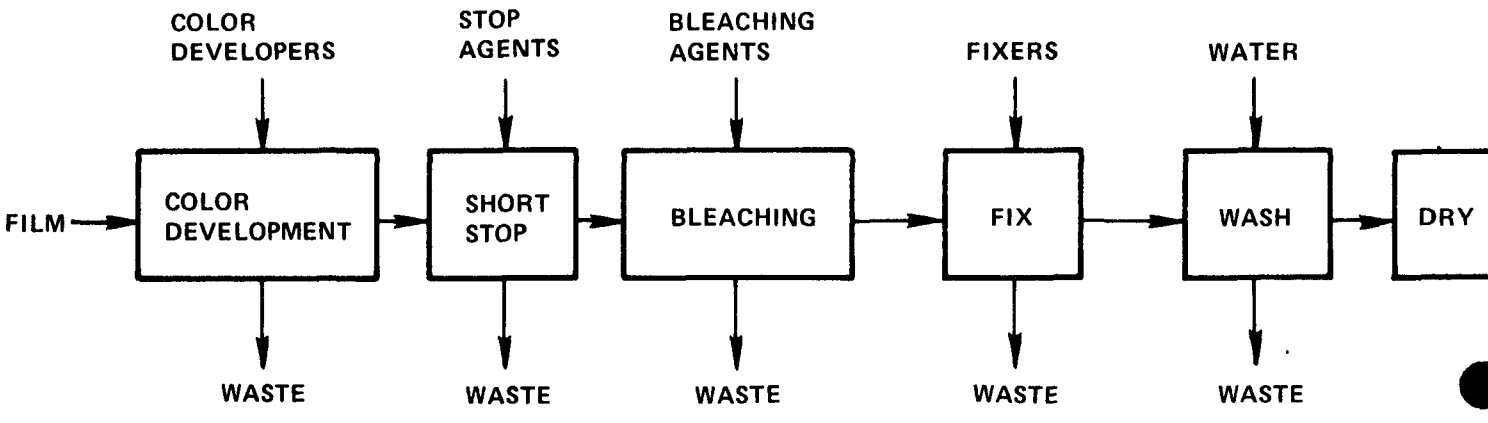

Effluent wastewaters from color film development are also relatively uniform in quality and are characterized by high concentrations of benzyl alcohol, developing agents, sulfates, sulfites, borate and phosphate in the developer wastes; acetates, sulfates diethylene glycol and phosphate in the short stop bath waste; ferrocyanide or ferric EDTA in the bleach waste and acetates, sulfites and silver thiosulfate complex in the fixing bath waste. The major pollutants which contribute to BOD are benzyl alcohol, sulfites, acetates, and thiosulfate. Other wastes are generated during the processing; these pollutants, however, vary in type and concentration depending upon which photoprocessing operation is employed.

Many variations of this basic process exist. Some color processes combine the bleach and fixing steps to give a monobath which performs both operations simultaneously.

After the film is dried, positive paper prints are made by exposing light through the film onto a color photographic paper with three color sensitive layers containing couplers. Processing of the print is similar to that used in the negative development.

Color Reversal Development

There are two different types of color reversal films and their processing is slightly different. In one, the compounds which form the color image are incorporated into the emulsion layers at the time of manufacture. Most color reversal films are of this type. The second type of color reversal film has three black and white color sensitive layers. In this type of film the color couplers are included in the color developer solutions.

In processing the first kind of color reversal film, after the negative image is formed, the emulsion is washed and may be treated in a hardening bath. The silver not used to form the negative image in the three layers is made developable either by light or chemical action, and a positive silver image is formed by the action of a color developer. The oxidized developer combines with the couplers in the three layers to form the three dye images. This part of the process is very similar to the processing of color negative material, except that the image on the film is positive. The remaining steps are much the same. Films of this type include Ektachrome, Ansochrome, Agfachrome and Fugichrome. The process flow diagram for color reversal development with incorporated couplers is shown in Figure IVG-4.

FIGURE IVG-4

COLOR REVERSAL PROCESSING (INCORPORATED COUPLERS)

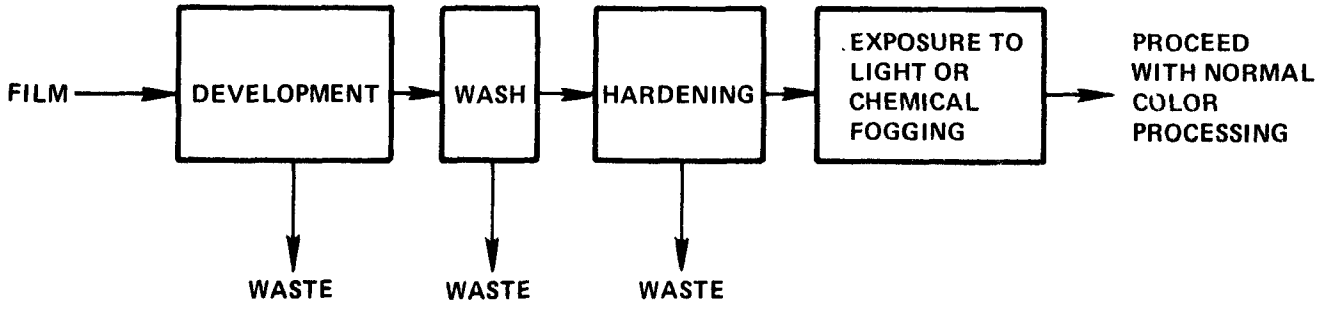

The effluent wastes in the reversal process are similar to the color process wastes except for the addition of sulfamic acid and sulfate from the reversal bleach process and acetate and sulfate from the hardening bath.

Color reversal film without the incorporated couplers are processed in a manner similar to those just described up to the formation of the negative image in all three layers. After this, all three layers in the emulsion are treated separately. First, the red-sensitive layer is made developable by exposure to red light through the base of the film. The other two layers, which are not sensitive to red light, are unaffected. The film is then treated with a color developer that contains, among many other ingredients, a soluble cyan dye coupler. As the color developer agent reduces the silver and forms an image, the oxidized color developer in the vicinity of the developed silver grains forms a positive cyan dye (red) image.

After washing, the film is exposed from the top with blue light, forming a latent image in the top blue-sensitive layer. A yellow filter layer protects the middle green-sensitive layer. A second color developer, containing a soluble yellow coupler, produces both a silver and yellow positive dye image in the top layer.

After a wash the film is either exposed to white light or chemically fogged and a third color developer, containing a magenta coupler, forms the final positive silver and magenta colored dye image (green). In the film or paper, there are three negative silver images, three positive silver images and three colored dye images. The silver images are removed as in the negative color process by bleaching and fixing, washing and drying. Films of this type include Kodachrome and GAF Moviechrome. The process flow diagram for color reversal development with couplers in the developer is shown in Figure IVG-5.

FIGURE IVG-5

COLOR REVERSAL PROCESSING (COUPLERS IN DEVELOPER)

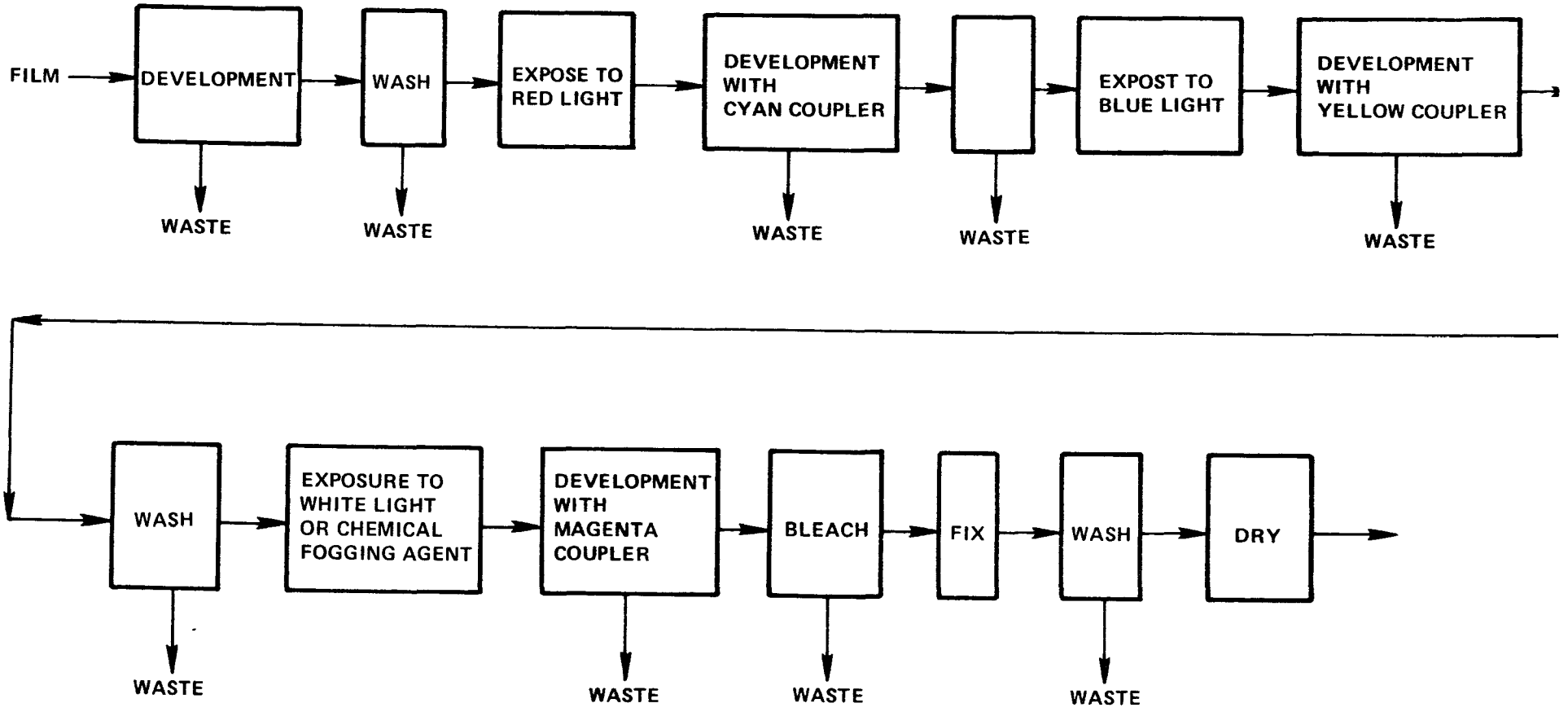

DRAFT

H. Hospitals

Discussion of the Rationale of Categorization

Prior to attempting development of effluent limitation guidelines for the Hospitals category, the potential of need for establishing subcategories was investigated to determine whether there were areas of the Hospitals category where separate effluent limitations and standards should apply. The following factors were considered in determining whether subcategorization was justified.

Hospital Size

From inspection of historical and survey data, it was determined that hospital size, measured in terms of number of occupied beds served, apparently has no significant effect on the pounds of pollutant per occupied bed generated by a hospital. It was also observed that there was no apparent relationship between the volume of wastewater generated, measured as gallons per 1,000 occupied beds, and the size of the hospital in terms of number of occupied beds.

Hospital size, measured in terms of number of occupied beds served, was used as the basis for computing raw waste loads for hospitals. This proved to be a more consistent yardstick for hospitals than floor area.

Hospital Age

During the survey, both old and new hospitals were studied. Following analysis of the survey and historical data, it was concluded that hospital age is not a significant factor in determining the characteristics of a hospital's wastewater.

Hospital Location

The states surveyed during the study include Pennsylvania, New York, West Virginia, California, New Jersey, Maine, Wyoming, and Georgia. Analysis of data from hospitals in these various geographical areas of the United States indicated that location has no effect on the quality or quantity of the wastewaters generated by a hospital facility.

Hospital Type

Hospitals specializing in different types of services were studied during the project. These services included general medical and surgical, psychiatric, tuberculosis, cancer, orthopedic,and research. It was concluded that the type of service provided by a hospital did not form a basis for subcategorization.

Nature of Wastes Generated

Hospital wastewater samples were collected and analyzed during the project, and additional data compiled by the Veterans Administration were also obtained. Analysis of this data indicated that the wastewater characteristics exhibited by all the hospitals studied were fairly uniform. Therefore, it was concluded that the nature of the wastewaters generated by hospitals is similar, and this factor does not form a basis for subcategorization.

Treatability of Wastewaters

Although most hospitals discharge their wastewaters to municipal sewer systems, biological on-site treatment systems are employed in some cases. The predominating type of on-site treatment utilized by hospitals is trickling filters, although some activated sludge and aerated lagoon systems were also observed. The contaminant concentrations and pollutant loadings recorded by the hospitals studied were very similar. It was concluded that hospital wastewaters are amenable to biological treatment and therefore wastewater treatability characteristics did not warrant subcategorization.

Summary of Considerations

It was concluded that the wastewater characteristics of the hospitals studied were very similar and independent of all of the above factors. Therefore, for the purpose of establishing effluent guidelines and standards for hospitals, additional subcategorization of this category was not required.

Category Description

The three major areas in a hospital which generate wastewaters are patient rooms, laundries, and cafeterias. Sanitary flows are the primary wastes from hospital patient rooms and, obviously, the more beds a hospital has, the more significant this flow will be. Cafeterias are another large contributer to the wastewaters generated by hospitals. The cleaning of foodstuffs, preparation of meals, washing of dishes, and floor and equipment cleaning are all activities which generate wastewaters from a cafeteria. These wastes usually contain organic matter, in dissolved and colloidal state, and oils and greases in varying degrees of concentration. The third major contributor of wastewaters in a hospital is laundries. Laundry wastes originate from the use of soap, soda, and detergents in removing grease, dirt, blood, and starch from soiled clothing and linens. Clothes and linens are usually placed in a double cylinder with water, soap, and other washing agents (bleaches, softeners, etc.). Rotation of the inner perforated cylinder (the outer cylinder is stationary)

produces the agitation necessary to free or dissolve the impurities from the fabrics. Following the washing cycle, the dirty wash water is discharged to the sewer. Laundry wastes generally have a high turbidity, alkalinity, and BOD content.

Three other areas in a hospital which discharge smaller quantities of wastewaters are surgical rooms, laboratories, and X-ray departments. Surgical room wastewaters are primarily washwaters from cleaning activities. Laboratory wastes generally consist of solvents, glassware washwater, and various reagents used in the laboratory. Research hospitals may also have animal cage washings in their laboratory wastes. X-ray departments are an additional source of wastewaters. These wastes consist of spent solutions of developer and fixer, containing thiosulfates and compounds of silver. The solutions are usually alkaline and contain various organic reducing agents. Most hospitals recover the silver from spent X-ray film developing solutions. All pathological wastes from surgical suites are collected and disposed of in hospital pathological incinerators.

Some hospitals generate radioactive wastes from diagnostic and therapeutic uses. Iodine-131 and phosphorus-32 are the radioisotopes which predominate in hospital radioactive wastes. Fortunately, these possess short half-lives, and simple detention tanks can render them inactive. The handling of radioactive waste is closely monitored by AEC, and these wastes are not discharged to the hospital sewer system.

SECTION V

WASTE CHARACTERIZATION

General

This section is intended to describe and identify the water usage and wastewater flows in individual processes in each industry. Each industry is presented separately. After developing an understanding of the fundamental production processes and their inter-relationships in each industry, determination of the best method of characterizing each industry's discharges will enhance the interpretation of the industry water pollution profile. If unit raw waste loads could be developed for each production process within an industry, then the current effluent wastewater profile could be obtained by simply adding the components, and future profiles by projecting the types and sizes of the industry. However, the detailed information required for such approach is not available from any of the industries included in the Miscellaneous Chemicals.

A common approach for discussion of waste characteristics of the various Miscellaneous Chemicals industries could not be taken because of the basic differences in the manufacturing processes and practices of various industries. Each industry's waste characteristics are therefore discussed separately in the following text.

A. Pharmaceutical Industry

Plants in the Pharmaceutical industry operate continuously throughout the year. Their processes are characterized largely by batch operations, which have significant variations in pollutional characteristics during any typical operating period. However, some continuous-unit operations are used in the Fermentation and Chemical Synthesis subcategories. Batch operations refer to those processes that utilize reactors on a fill-and-draw basis. The reactor is charged with a batch of raw materials, and at the conclusion of the reaction, the vessel is emptied, cleaned, and charged again with raw materials. In a batch operation, the flow of raw material into a reactor and the flow of product from the reactor are intermittent. In a continuous operation, the flow of raw materials into a reactor and the flow of product from the reactor are continuous.

The major sources of process wastewater in the Pharmaceutical industry include product washings, product purification and separation, fermentation processes, concentration and drying procedures, equipment washdowns, barometric condensers, and pump-seal waters. Wastewaters from this industry can be characterized as having high concentrations of BOD_5, COD, TSS, and volatile organics. Wastewaters from some wet chemical syntheses may contain heavy metals (Fe, Cu, Ni, Ag) or cyanide, and may have anti-bacterial constituents which can exert a toxic effect on biological waste treatment processes. Considerations significant to the design of joint treatment works are the highly variable BOD_5 loadings high chlorine demand, presence of surface-active agents, and the possibility of nutrient deficiency.

Subcategory A - Fermentative Product Manufacturers

Fermentation is an important production process in the Pharmaceutical industry. Liquid wastes from a fermentation plant can be classified as (1) strong fermentation beers, (2) inorganic solids, such as diatomaceous earth, which are utilized as a product or an aid to the filtration process, (3) floor and equipment wash waters, (4) chemical wastes such as solvent solutions used in extraction processes, and (5) barometric condenser water resulting from solids and volatile gases being mixed with condenser water.

The most troublesome waste of the fermentation process is spent beer. The beer is the fermented broth from which the valuable fraction, antibiotic or steroid, has been extracted, usually through the use of a solvent. Spent beer contains the residual food materials such as sugars, starches, and vegetable oils not consumed in the fermentation process. Spent beer contains a large amount of organic material, protein, and other nutrients. Although spent beer frequently contains high amounts of nitrogen, phosphate, and other growth factors, it is also likely to contain salts like sodium chloride and sodium sulfate as the result of extraction processes.

Methods for treating the liquid fermentation waste are generally biological in nature. Although fermentation wastes, even in a highly concentrated form, can be satisfactorily treated by biological systems, it is more proper and less likely to upset the system if these wastes are first diluted to some degree by addition of other waste streams. One such recommended method is to combine fermentation wastes with large volumes of sanitary effluents. No further nitrogen, phosphorus or trace elements are generally needed to carry out a satisfactory biological treatment of the contaminants in the combined wastes. Fermentation wastes are characterized by high BOD_5, COD, and TSS concentration and pH values generally ranging between 4 and 9.

Subcategory B - Biological and Natural Extraction Product Manufacturers

The two major production processes utilized to manufacture biological products are blood fractionation and vaccine production. The primary sources of wastewater in blood fractionation processes are spent solvents, waste plasma fraction, and equipment (reactor) wash waters. Generally, the spent solvents are recovered or incinerated with the waste plasma fraction. The primary sources of wastewater generated during vaccine production are spent media broth, spent eggs, glassware and vessel washings, and bad batches of production seed and/or final product. The spent media broth and spent egg wastes are usually incinerated, while the washwater wastes are sewered. Natural extractions production includes the processing of bulk botanical drugs and herbs. The primary wastewater sources include floor washings, residues, equipment and vessel wash waters, and spills. Whenever possible, bad batches are recycled, if this is not feasible, the bad batches are discharged to the plant process sewer system. Solid wastes, such as spent plant tissue are usually landfilled or incinerated. The wastewaters from these production processes are characterized by low BOD_5 and COD concentrations and pH values between 6 and 8.

Subcategory C - Chemical Synthesis Production

The effluent from the chemical synthesis segment of the Pharmaceutical industry probably is the most difficult to treat compared with the others, because of the many batch type operations and chemical reactions, including nitration, amination, halogenation, sulfonation, alkylation, etc. The processing may generate wastes containing high COD, acids, bases, cyanides, refractory organics, suspended and dissolved solids, and many other specific contaminants. In some instances, process solutions and vessel washwater may also contain residual organic solvents. Thus, it may be necessary to equalize or chemically treat a process wastewater before it is acceptable for discharge to a municipal or on-site conventional biological treatment facility.

Wastewaters from the production of fine chemicals are characterized by high BOD_5 and suspended solids concentrations and pH variations from 1 to 11. Major wastewater sources from these chemical plants include process wastes (filtrates, centrates, spent solvents, etc.), floor and equipment wash waters, ejector condensate, spills, wet scrubber spent waters, and pump seal water. Some wastewaters from chemical manufacturing plants are not always compatible with biological waste treatment, and although it is sometimes possible to acclimate bacteria to various chemicals, there may be instances where certain chemical wastes are too concentrated or too toxic to make this feasible.

Subcategory D - Mixing/Compounding or Formulation Production

Pharmaceutical manufacturing represents all the various operations that are involved in producing a packaged product suitable for administering as a finished, usable drug. The majority of pharmaceutical manufacturing firms are compounders, special processors, formulators and product specialists. Their primary objective is to convert the desired prescription to tablets, pills, lozenges, powders, capsules, extracts, emulsions, solutions, syrups, parenterals, suspensions, tinctures, ointments, aerosols, suppositories, and other miscellaneous consumable forms. These operations can be described as labor intensive and low in waste production. In general, none of the unit operations utilized in manufacturing a drug (i.e., mixing, drying, tableting, capsulating, packaging, etc.) generates wastewater because none of them use water in any way that would cause a water pollution problem. The primary use of water in the actual manufacturing processes is for cooling water in chilling units. The major sources of wastewater from a pharmaceutical manufacturing plant are: floor and equipment wash waters; wet scrubbers; inadvertent raw material, intermediate, or product spills; and laboratories. The use of water to clean out mixing tanks can flush materials of unusual quantity and concentration into the plant sewer system. The washouts from receipe kettles, which are used to prepare the master batches of the pharmaceutical compounds, may contain inorganic salts, sugars, syrup, etc. Dust fumes and scrubbers used in connection with building ventilation systems or, more directly, on dust and fume generating equipment, can be another source of wastewater depending on the characteristics of the material being removed from the air stream.

The current manufacturing practices established by industry and codified by the FDA have insured a number of safeguards with regard to several of these wastewater sources:

1. Tableting, pill, encapsulating, and powder preparation areas are segregated, with air control to remove air-borne particles through adequate recovery systems.

2. Bulk-chemical preparation areas involving aqueous solutions are generally curbed and guttered so that spills and washdowns can be directed to the proper treatment system.

3. Generally, pharmaceutical operations are under-roof; thus, storm water contamination does not present a problem.

4. Generally, pharmaceutical operations utilize scrubbing systems on any vacuum or vent air control systems. Thus, seal and scrubber water can be discharged to the proper drain system for appropriate treatment.

Pharmaceutical plants generate wastewater effluents largely sanitary in nature and readily treatable in a biological treatment system. The wastewaters from a pharmaceutical manufacturing plant are generally characterized by low BOD and COD concentrations and by a pH from 6 to 8.

Subcategory E - Research

Generally, quantities of materials being discharged by research operations are relatively small when compared with the volumes generated by production facilities. However, the problem cannot be measured entirely by volume of material going to the sewer. Research operations are frequently erratic as to quantity, quality, and time schedule when wastewater discharging occurs. The most common problem is that of flammable solvents, especially low-boiling-point solvents like ethyl ether, that can cause explosions and fires. The major wastewater sources are vessel and equipment washings, animal cage wash water, and laboratory-scale production units. The wastewaters are generally characterized by BOD_5 and COD concentrations similar to domestic sewage and by pH values between 6 and 8.

Factors Affecting Wastewater Characteristics

The characteristics of the wastewater generated by a plant in the Pharmaceutical industry depend a great deal on various in-plant production procedures. Specifications and standards in "The Good Manufacturing Practices Regulations" place severe restrictions on the ability to reuse and recycle process effluents because of cross-product contamination considerations. However, some of the industrial in-plant pollution abatement techniques which are used and can significantly influence a plant's wastewater characteristics are discussed below:

1. Solvent recovery and recycle are normally practiced in both the chemical synthesis and fermentation production segments of the industry. Certain products require a high-purity solvent in order to achieve the required extraction efficiency. This increases the incentive for making the recovery process highly efficient. Ammonia recovery and reuse are also employed in some cases.

2. Incineration is a common unit operation in the Pharmaceutical industry. Some solvent streams which cannot be recovered economically are incinerated. Incineration is also used to dispose of such items as "still bottoms" from solvent recovery units, research animals, sludges, and waste materials from biological products manufacturing.

3. Dry-vacuum-cleaning units are used extensively in pharmaceutical manufacturing plants. In this practice, a potential source of significant wastewater flows is removed, in exchange for a solids-handling problem which has significantly less adverse environmental impact.

4. Chemical synthesis plants also employ various pretreatment operations for cyanide destruction and the removal of heavy metals from the wastewaters generated by certain unit operations. This practice improves the biological treatability of the plant's wastewater and reduces the potential problem of metals or cyanide in the plant's wastewater treatment plant final effluent.

The wastewater characteristics generated for each of the five subcategories do not reflect total raw waste loads due to the various in-plant pollution abatement measures practiced by the Pharmaceutical industry. Although the study survey teams did observe some of these in-plant measures, information provided by the individual plants concerning their operation was minimal and sampling around these units was not allowed. For these reasons, it was not possible to evaluate the efficiencies of such units and determine their effectiveness to reduce raw waste loads.

Raw waste loads (RWL) were computed for each of the plants visited during the study survey period. Only contact process wastewaters were used in calculating these loading values. The noncontact streams which were segregated from the contact process wastewater flows and were not included in the raw waste load figures include the following:

1. Sanitary wastewaters.
2. Boiler and cooling tower blowdowns or once-through cooling water.

3. Chemical regenerants from boiler and process feed water preparation.
4. Storm water runoff from nonprocess plant areas, e.g., tank farms.

Five major parameters were considered:

1. BOD_5 Raw Waste Loading (expressed as lbs BOD_5/1,000 lbs of product)

2. COD Raw Waste Loading (expressed as lbs COD/1,000 lbs of product)

3. TSS Raw Waste Loading (expressed as lbs TSS/1,000 lbs of product)

4. TOC Raw Waste Loading (expressed as lbs TOC/1,000 lbs of product)

5. Contact Process Wastewater Flow Loading (expressed as gals/1,000 lbs of product)

The RWL figures for subcategory E are expressed as gallons or pounds per 1,000 square feet of floor area.

Development of the Raw Waste Loads (RWL) was accomplished in stepwise fashion from the data obtained in the field. The RWL data relating to individual manufacturing processes were grouped according to the subcategory in which the processes were assigned. The RWL figures computed for the plants surveyed are shown by subcategory in Table VA-1. An attempt was then made to determine if a relationship existed between the production levels of the plants in the various subcategories and the pollutant raw waste loads generated by these same plants. Only in subcategory A was a clear cut relationship observed, as shown in Figures VA-1 through VA-4 For this subcategory, pollutant raw waste loads decreased as production levels increased. Equations defining these plots were then formulated and serve as the basis for computing average RWL values for subcategory.

A. The equations developed are as follows:

Flow: $\text{Log } y = 5.9 - 1.6 \text{ Log } x$
BOD_5: $\text{Log } y = 4.24 - 1.3 \text{ Log } x$
COD: $\text{Log } y = 4.51 - 1.2 \text{ Log } x$
TOC: $\text{Log } y = 4.08 - 1.3 \text{ Log } x$

Where: y = plant pollutant RWL (lb/1,000 lb production)
x = plant production (1,000 lb/day)

Table VA-1

DRAFT

Pharmaceutical Industry
Raw Waste Loads

Plant	Production kkg/day (1000 lb/day)	Flow kkL/day (mgd)	Flow L/kkg product (gal/1000 lb prod)	Raw Waste Load (kg/kkg Prod)[1] BOD5	COD	TSS	TOC
Subcategory A - Fermentative Products							
4	2.21 (4.87)	1.02 (0.27)	469,000 (56,300)	2050	3310	288	993
1	3.0 (6.7)	0.30 (0.08)	99,000 (11,400)	1250	3110	1180	961
19	2.4 (5.3)	1.62 (0.43)	672,000 (80,700)	2800	6230	1400	2110
20	3.3 (7.2)	0.94 (0.25)	289,000 (34,700)	1060	4060	1940	1430
2	1.43 (3.15)	2.01 (0.53)	1,400,000 (168,000)	6160	10,900	1840	4870
09	0.64 (1.4)	1.82 (0.48)	2,860,000 (343,000)	8090	16,300	1900	4440
Raw Waste Load				Fig. VA-2	Fig. VA-3	--	Fig. VA-4
Subcategory B - Biological and Natural Extraction Products							
12	0.15 (0.34)	0.08 (0.02)	287,000 (34,400)	131	211	1.2	21.6
08	0.06 (0.14)	0.08 (0.02)	992,000 (119,000)	79.1	247	19.3	25.5
17	1.94 (4.28)	0.80 (0.20)	397,000 (47,600)	221	350	7.5	57
Raw Waste Load				144	269	--	34.7
Subcategory C1 - Chem. Synthetic Products							
4	32.9 (72.5)	4.17 (1.10)	126,000 (15,100)	71	284	98	124
10	31.6 (69.6)	5.68 (1.50)	180,000 (21,600)	261	603	31	204
11	8.8 (19.5)	3.33 (0.88)	374,000 (44,900)	859	1390	108	760
19	11.3 (25.0)	1.21 (0.32)	108,000 (13,000)	180	374	61	94
15	11.1 (24.4)	0.11 (0.03)	10,200 (1,230)	142	208	3.8	107
Raw Waste Load				302	572	--	258
Subcategory C2 - Chem. Synthetic Products (Antibiotics only)							
1	0.74 (1.64)	0.08 (0.02)	100,000 (12,000)	5200	5540	58.2	2800
Raw Waste Load				5200	5540	--	2800
Subcategory D - Mixing & Compounding Products							
5	8.99 (19.8)	0.08 (0.02)	8500 (1,020)	8.0	11.4	1.14	3.9
17	24.8 (54.7)	0.23 (0.06)	6420 (770)	8.2	12.5	0	5.10
18	5.1 (11.2)	0.04 (0.01)	5360 (643)	7.4	14.0	2.4	--
3[2]	30.4 (67.0)	1.51 (0.40)	38,200 (4,580)	8.74	21.0	2.2	6.4
Raw Waste Load				8.1	14.7	--	5.1
Subcategory E - Research	Floor Area			Raw Waste Load-kg/1000m^2 (lb/1000 sq ft)			
5	9,200 m^2 (99,000 ft^2)	0.08 (0.02)	7,030 (172)	2.15 (0.44)	4.00 (0.82)	0.15 (0.03)	0.78 (0.16)
17	37,500 m^2 (404,000 ft^2)	0.53 (0.14)	13,900 (340)	1.51 (0.31)	3.42 (0.70)	0.049 (0.01)	0.58 (0.12)
14	7,900 m^2 (85,000 ft^2)	1.10 (0.29)	13,900 (340)	1.61 (0.33)	3.46 (0.71)	4.88 (1.0)	1.95 (0.40)
Raw Waste Load				1.76 (0.36)	3.63 (0.74)	-- --	1.10 (0.23)

[1] kg/kkg equivalent to lbs/1000 lbs

[2] also Subcategory B

FIGURE VA 1

CATEGORY A - BOD_5 RAW WASTE LOAD
VS
PRODUCTION

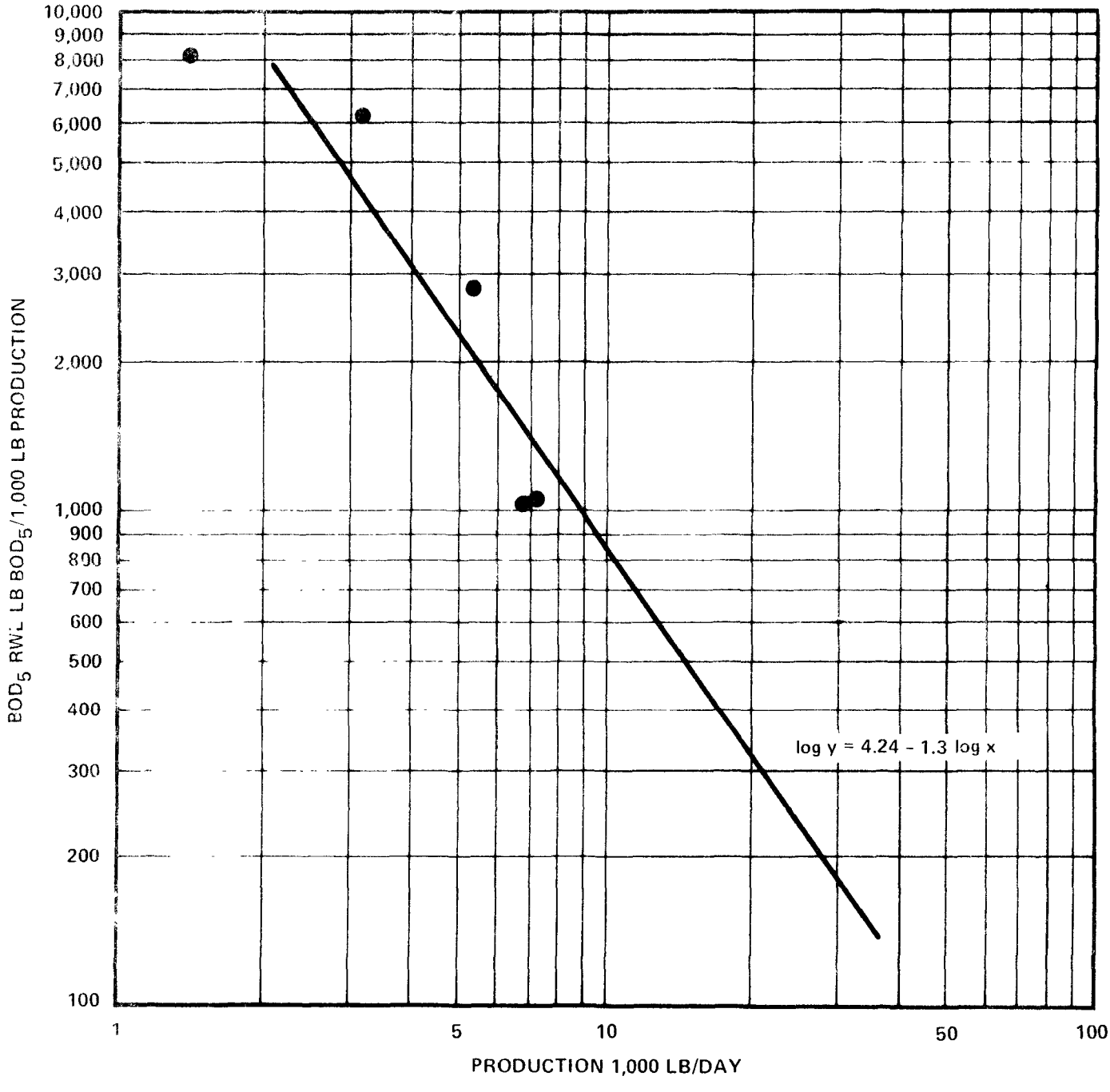

FIGURE VA-2

CATEGORY A - COD RAW WASTE LOAD
VS
PRODUCTION

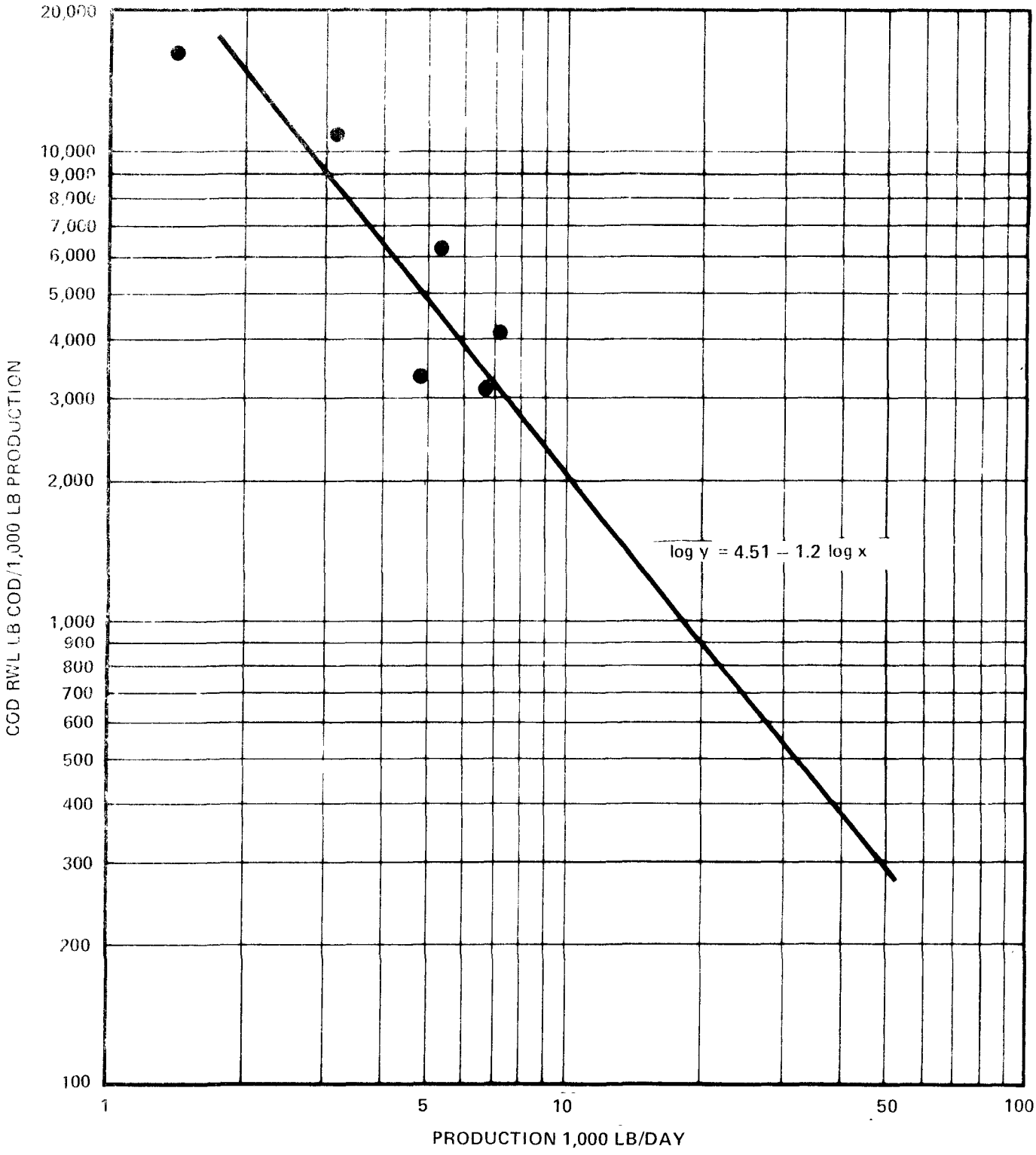

FIGURE VA-3

CATEGORY A - TOC RAW WASTE LOAD
VS
PRODUCTION

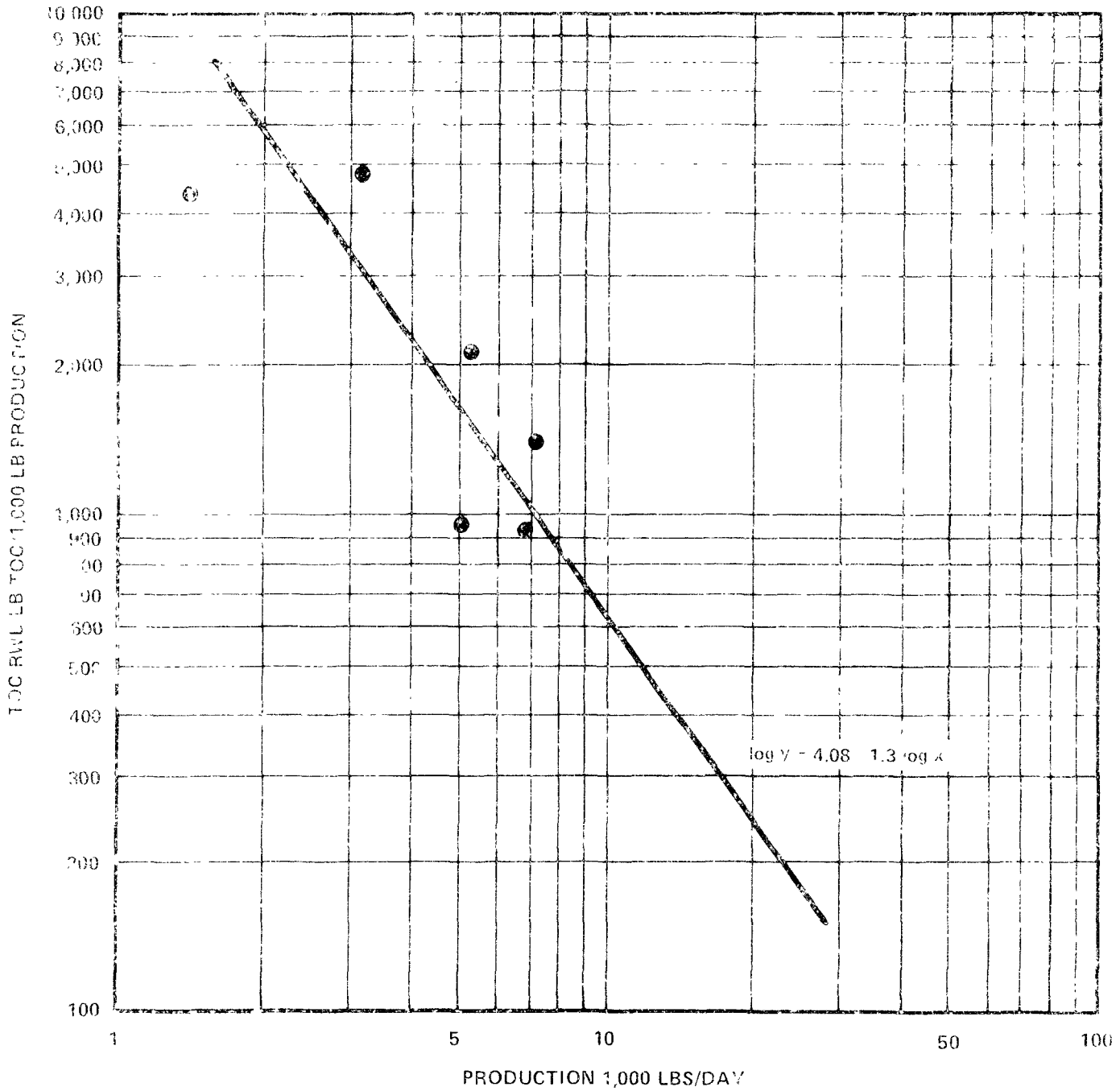

FIGURE VA-4
PHARMACEUTICAL INDUSTRY
SUBCATEGORY A
FLOW RAW WASTE LOAD
VS
PRODUCTION

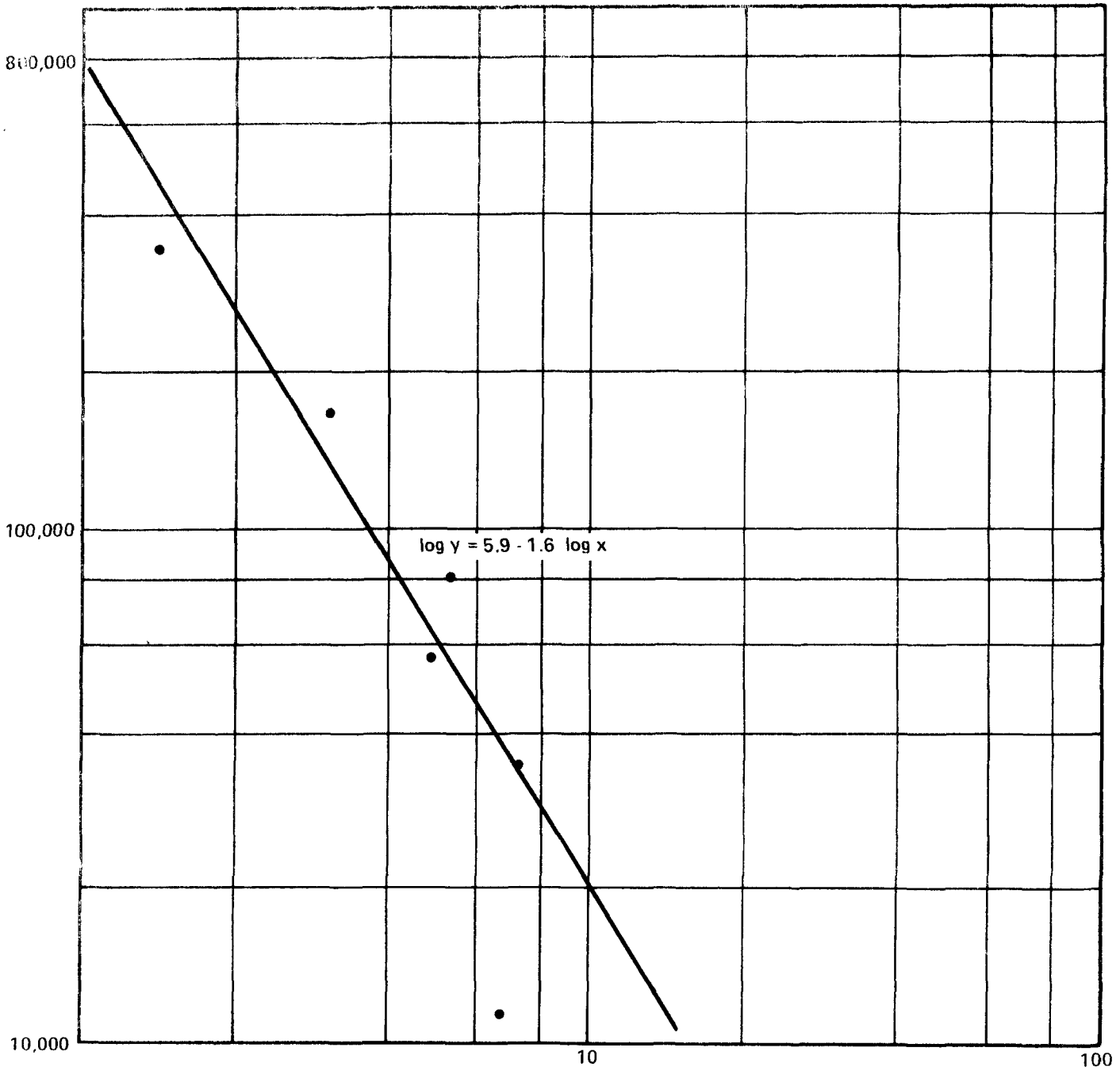

For subcategories B, C, D, and E, the RWL values were determined by averaging the RWL values computed for the plants in each subcategory. These RWL values are shown in Table VA-1. RWL values for TSS were not developed for any of the subcategories; instead, allowable TSS effluent concentrations are proposed. This approach was taken because of the fact that suspended solids will be developed in any biological wastewater treatment system, and it is, therefore, more convenient to establish an allowable TSS effluent concentration.

The raw waste loading data for each subcategory are plotted as pollutant raw waste loading versus contact process wastewater flow loading in Figures VA-5 through VA-9. This type of plot is a convenient device for illustrating the quality or strength of the wastewaters generated by industries in each of the subcategories. Since both the loading (ordinate) and flow (abscissa) are expressed in terms of production, dividing the loading by the flow gives a slope which is equivalent to concentration. Reference lines of constant concentration have been drawn diagonally across each of the plots. Relating a specific data point to one of these lines provides a convenient estimate as to raw waste concentrations. The individual plant RWL data for subcategory A are plotted in Figure VA-5. Sufficient data were obtained to establish general increasing trends between pollutant RWL and flow RWL within the subcategory. Pollutant data points generally fall into the following concentration ranges:

BOD_5 - 4,000 to 11,000 mg/L

COD - 9,000 to 15,000 mg/L

TSS - 800 to 7,000 mg/L

TOC - 1,800 to 10,000 mg/L

The survey RWL data for the plants grouped in subcategory B are plotted in Figure VA-6. This plot indicates that no definite relationships appear to exist between pollutant RWL and flow RWL. The following pollutant concentration ranges generally characterize this subcategory:

BOD_5 - 100 to 600 mg/L

COD - 400 to 1,000 mg/L

TSS - 10 to 50 mg/L

TOC - 30 to 200 mg/L

Figure VA-7 graphically illustrates the relationships between pollutant and flow RWL's for subcategory C. As in subcategory A, pollutant RWL's

FIGURE VA-4

CATEGORY A POLLUTANT RAW WASTE LOAD
VS
FLOW RAW WASTE LOAD

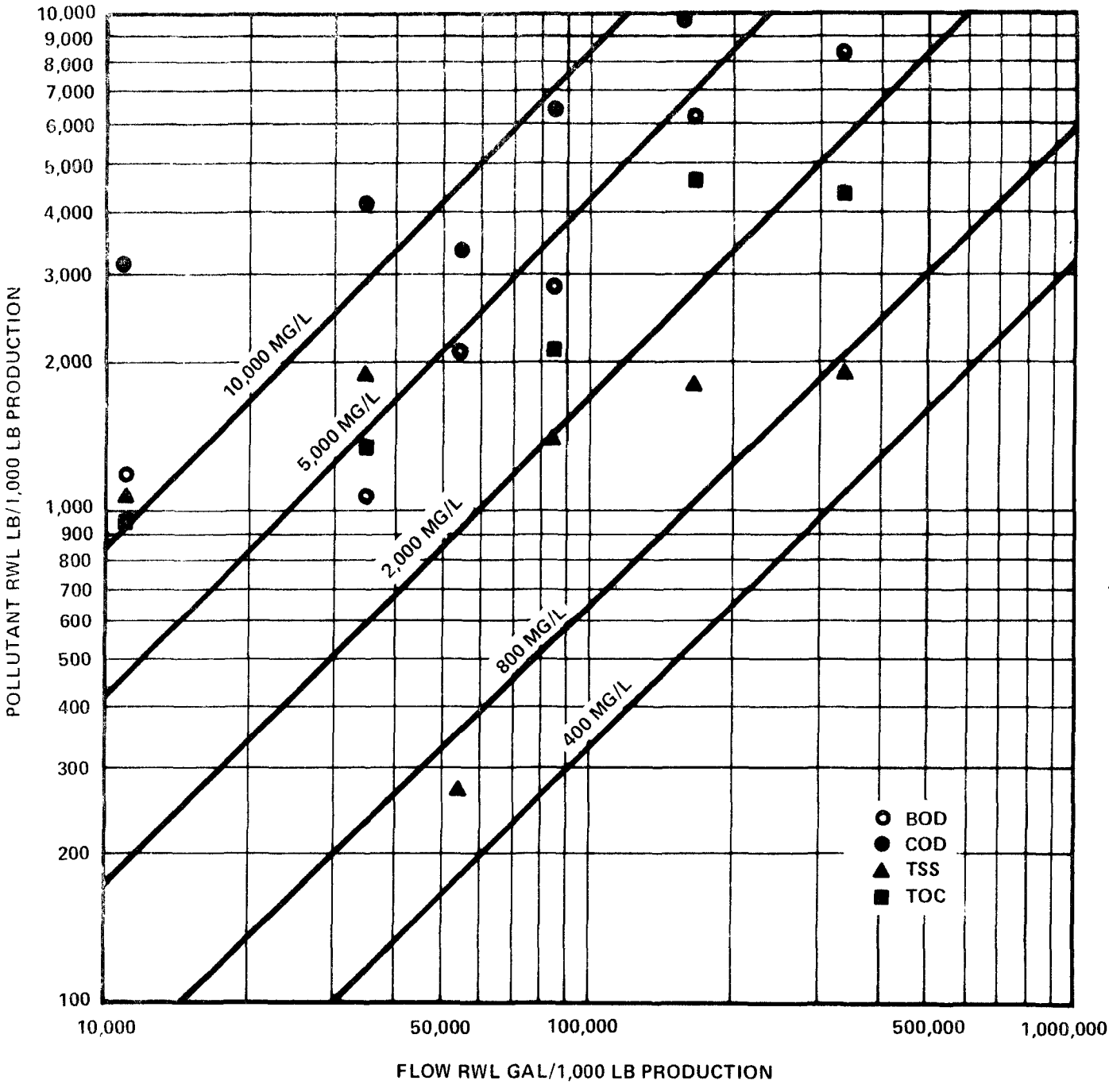

FIGURE VA-5

CATEGORY B POLLUTANT RAW WASTE LOAD
VS
FLOW RAW WASTE LOAD

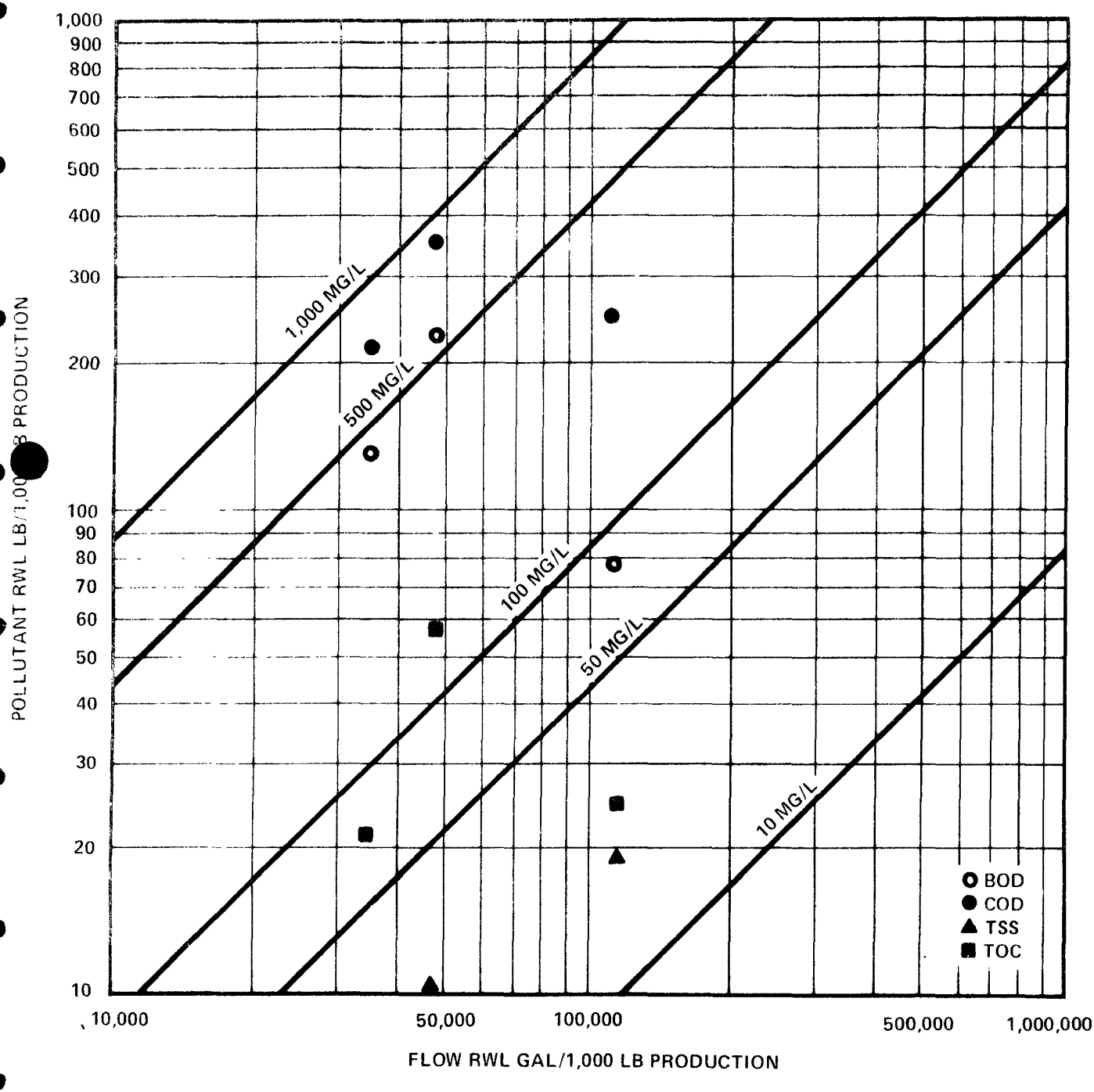

FIGURE VA-6

CATEGORY C POLLUTANT RAW WASTE LOAD
VS
FLOW RAW WASTE LOAD

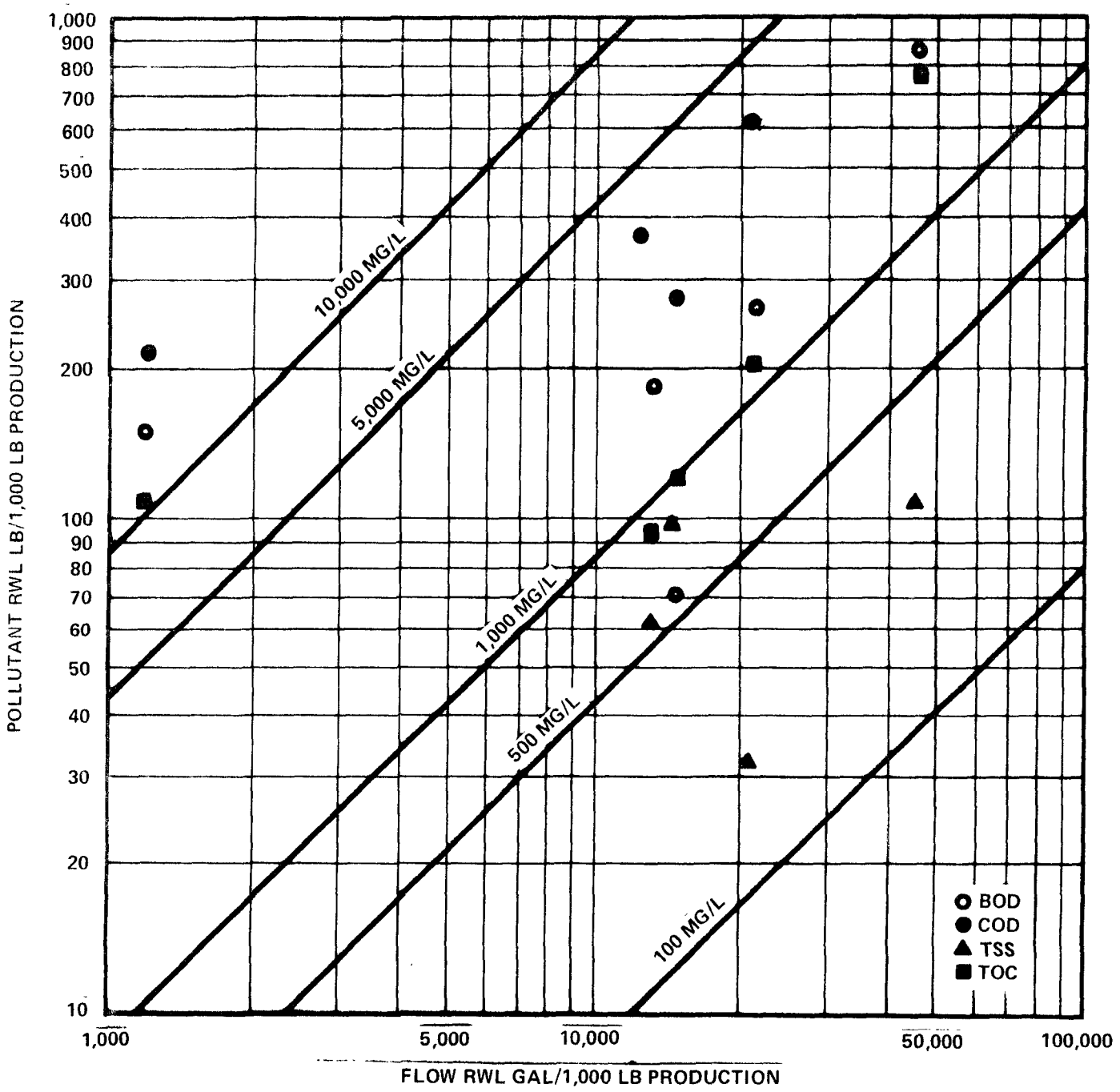

generally increase with flow RWL. The pollutant concentration ranges for subcategory C generally fall into the following ranges:

BOD_5	-	500 to	5,000	mg/L
COD	-	7,000 to	10,000	mg/L
TSS	-	200 to	900	mg/L
TOC	-	900 to	3,000	mg/L

The plant RWL data for subcategory D are plotted in Figure VA-8. The data indicate that within this subcategory pollutant RWL's remain fairly constant and are not dependent on flow RWL. The pollutant data points generally fall into the following concentration ranges:

BOD_5	-	250 to	2,000	mg/L
COD	-	500 to	4,000	mg/L
TSS	-	100 to	500	mg/L
TOC	-	200 to	900	mg/L

The RWL data for subcategory E are graphically presented in Figure VA-9. The RWL data plotted are insufficient to establish any clear-cut relationship between pollutant loading and flow loading. The individual pollutants fall into the general concentration ranges:

BOD_5	-	100 to	300	mg/L
COD	-	200 to	600	mg/L
TSS	-	200 to	500	mg/L
TOC	-	50 to	150	mg/L

As expected, plants falling into subcategories A and C generate wastewaters with the highest pollutant concentrations. In subcategory A, these high levels are primarily due to spent solvents used in extraction processes and sewered fermentation beers. In subcategory C, a myriad of organic chemicals are used as intermediaries in the production of fine chemicals and contribute significant pollutant loads to plant wastewater effluents.

Subcategories B, D and E are characterized by generally lower strength wastes. This is attributable to the limited use of process water by plants in these three subcategories. The major wastewater source for these three subcategories is equipment washwater, and these flows are usually small and intermittent.

FIGURE VA-7

CATEGORY D POLLUTANT RAW WASTE LOAD
VS
FLOW RAW WASTE LOAD

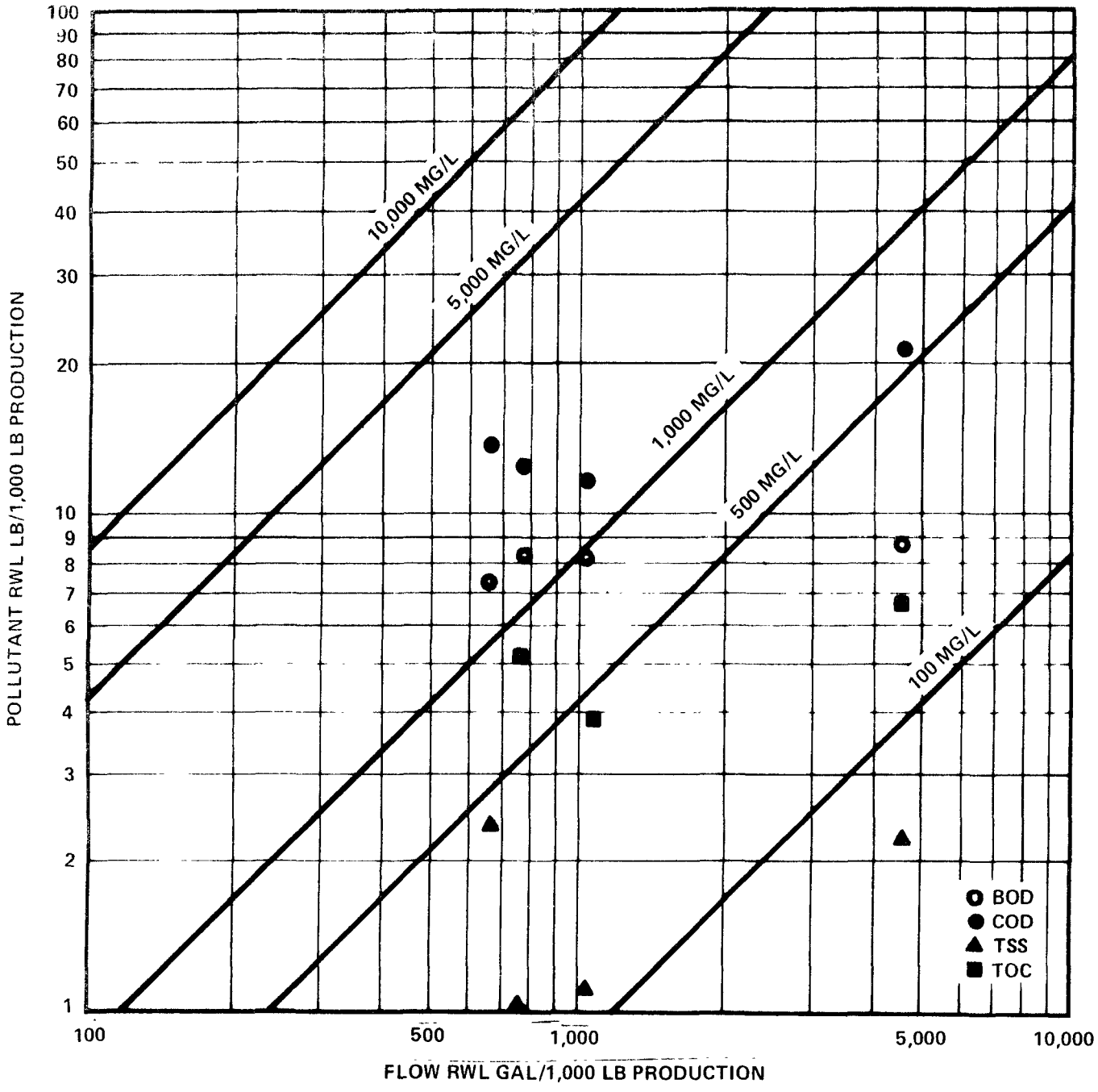

FIGURE VA-8

CATEGORY E POLLUTANT RAW WASTE LOAD
VS
FLOW RATE WASTE LOAD

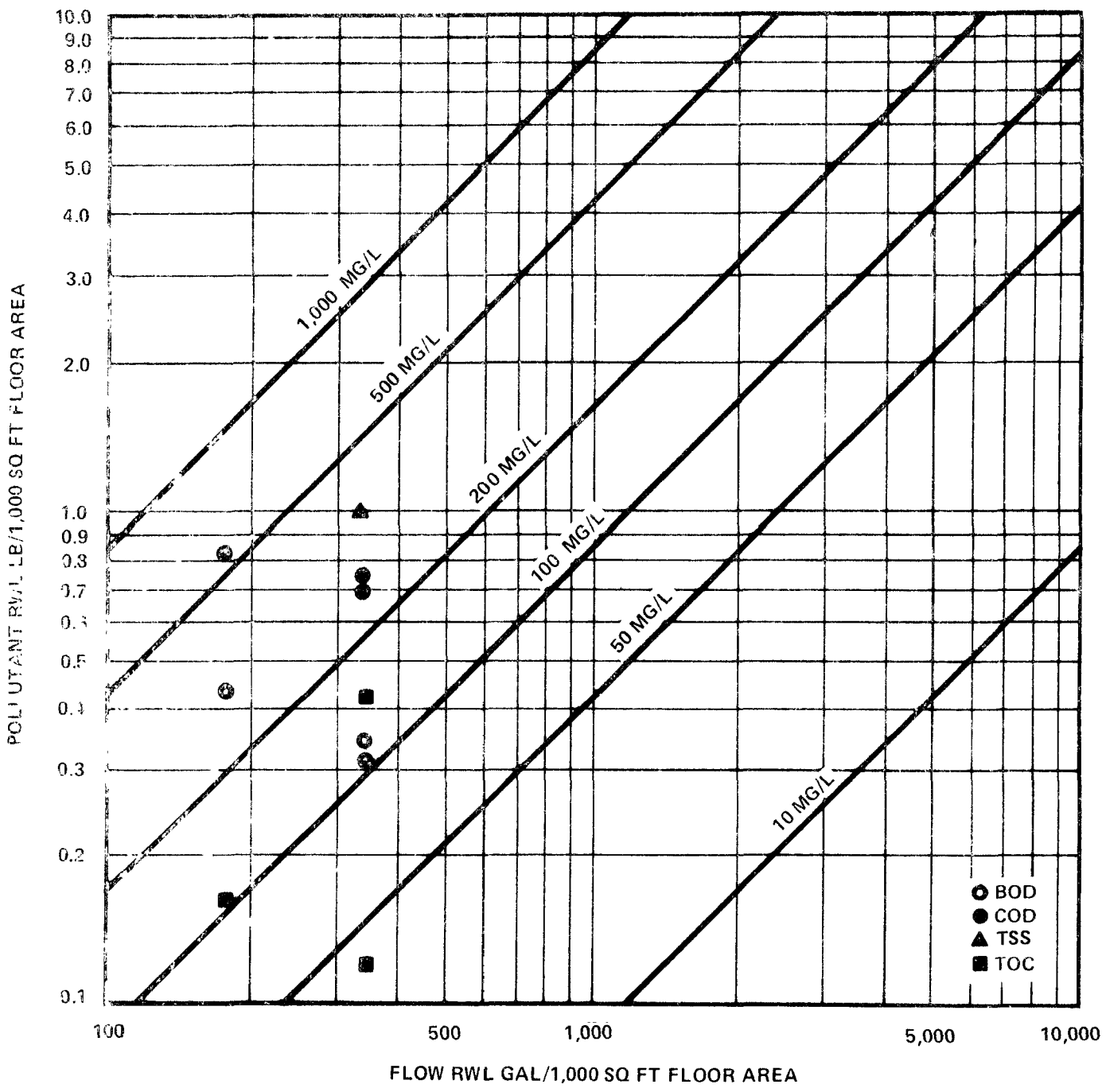

Table VA-2 presents a summary of RWL parameter ranges for each subcategory, as well as several ratios calculated to determine whether correlations existed between any of the parameters. From this table, it can be seen that the pollutant raw waste loadings within each subcategory were fairly consistent, although the raw waste loads varied considerably from subcategory to subcategory. This would verify the subcategorization selected for the Pharmaceutical Industry. Also, although the COD/BOD_5 and BOD_5/TSS ratios varied widely within each subcategory as well as from subcategory to subcategory, the BOD/TOC ratios within each subcategory were generally very close and were even fairly consistent from subcategory to subcategory.

Raw Waste Loads (RWL) for BOD_5, COD, and TOC had to be developed graphically for subcategory A, because RWL values varied with production levels; these are presented in Figures VA-1, 2, and 3. The RWL values for subcategories B, C_1, C_2, D, and E are the arithmetic average of the raw waste loads (RWL) computed for each of the plants in the individual subcategories; these are summarized in Table VA-3. It was felt that this was a logical approach since the RWL values within subcategories B, C_1, C_2, D, and E were fairly consistent. This approach is also more reasonable than selecting the lowest plant RWL value as the RWL for a sub-category, since this method would be unfair to the other plants in that sub-category. Raw waste loads (RWL) for all parameters analyzed in the field survey (except BOD_5, COD, TSS, and TOC) are presented in Table VA-4.

Table VA-2

Comparison of RWL Data

Pharmaceutical Industry

Parameter	Units	Range of Values					
		Subcategory A	Subcategory B	Subcategory C_1	Subcategory C_2	Subcategory D	Subcategory E
Flow	L/kkg (gal/1,000 lbs) product	91,600 - 2,870,000 (11,000 - 345,000)	283,000 - 999,000 (34,000 - 120,000)	8,300 - 375,000 (1,000 - 45,000)	(12,000)	5,400 - 37,500 (650 - 4,500)	7,000 - 14,000 170 - 340
BOD_5	kg/kkg[1]	1,000 - 8,000	80 - 220	70 - 850	5,200	7 - 9	1.5 - 2.0 0.3 - 0.4
COD	kg/kkg[1]	3,000 - 16,000	200 - 350	200 - 1,400	6,600	11 - [illegible]	3.4 - 3.9 0.7 - 0.8
TOC	kg/kkg[1]	1,000 - 5,000	20 - 60	100 - 760	3,100	4 - 5	0.5 - 2.0 0.1 - 1.4
TSS	kg/kkg[1]	300 - 2,000	1 - 20	4 - 100	52	1 - 2	0.05 - 4.9 0.01 - 1.0
COD/BOD_5		2 - 4	1.5 -4	1.2 - 6	1.3	1.4 - 2.4	1.0 - 2.3
BOD_5/TSS		0.5 - 4.3	2.4 - 109	0.4 -78	100	3 - 8.5	0.3 - 15
BOD_5/TOC		0.7 - 2	3.5 - 6	1.1 - 1.9	1.7	1.3 - 2.1	0.8 - 3

[1] kg/kkg production is equivalent to lbs/1000 lbs production

[2] Values for subcategory E are based on kg/1,000 m^2 (lb/1,000 ft^2) of total gross floor area

DRAFT

Table VA-3

Raw Wasteloads
Pharmaceutical Industry

Subcategory	Products	Flow L/kkg Product (gal. 1000 lb. product)	BPCTCA Raw Wasteloads BOD5 kg/kkg[1] product	BOD5 mg/L	COD kg/kkg[1] product	COD mg/L	TOC kg/kkg[1] product	TOC mg/L
A	Fermentation Products	533,000 (64,000)	See Figure VA-1		See Figure VA-2		See Figure VA-3	
B	Biological and Natural Extraction Products	558,000 (67,000)	144	258	269	481	34.7	
C_1	Chemical Synthesis Products	160,000 (19,200)	302	1,890	572	3,590	258	
C_2	Chemical Synthesis Products (Antibiotics only)	100,000 (12,000)	5,200	52,500	5,540	66,600	2,300	
D	Mixing/Compounding	14,600 (1,750)	8.1	555	14.7	1,010	5.1	
E	Research	11,600[4] (285)[2]	1.76[2] (0.36)[2]	151	3.63[2] (0.74)[3]	311	1.1[2] (0.23)[3]	

[1] kg/kkg equivalent to lbs./1000 lbs.
[2] In units of kg/1000 sq.meter
[3] In units of lb/1000 sq.ft.
[4] In units of Lit/1000 sq.meter
[5] In units of gal./1000 sq.ft.

DRAFT

Table VA-4

Raw Waste Loads - Pharmaceutical Industry

kg/kkg Production[1]

Plant No.	Subcategory	Production kkg/day (1,000 lb/day)	Flow L/kkg prod. (gal/1,000 lb prod.)	TDS	TKN	NO_3-N	Total P	Oil & Grease	Cl	SO_4	Sulfide	Total Hardness	Ca	Mg	CN	Phenol
04	A	2.2 (4.9	469,000 (56,300)	1,990	96.4	-	9.04	-	-	-	-	-	-	-	-	-
01	A	3.0 (6.7	95,000 (11,400)	692	172	0.001	20.2	-	-	-	-	-	-	5.35	-	-
19	A	2.4 (5.3	672,000 (80,660)	3,380	160	21.9	30.3	118	64.4	85.3	-	223	59.5	87	0.012	0.21
20	A	3.3 (7.2	289,000 (34,700)	552	232	0.0	11.5	159	10.4	138	-	152	149	1.6	-	-
02	A	1.4 (3.2	1,400,000 (168,000)	27,400	556	1.5	51.4	1 134	4,950	872	-	800	285	56	-	-
09	A	0.6 (1.4	2,860,000 (343,000)	1,900	350	0.0	9.4	1,240		0.0	-	0.0	0.0	[illegible]	0.0	0.086
		RWL		5,990	261	4.68	22.0	413	1,260	274	-	294	123	30.1	0.006	0.15
12	B	0.15(0.34	287,000 (34,400)	1,220	4.38	0.06	2.18	2.17	-	-	-	-	-	-	0.24	-
08	B	0.06(0.14	992,000 (119,000)	840	85	0.00	118.6	5.07	-	527	-	-	-	-	0.10	0.073
17	B	1.94(4.28	397,000 (47,600)	474	4.11	0.0	1.12	-	211	26.9	-	-	36.4	-	-	-
		RWL		895	31.2	0.02	7.30	3.62	211	277	-	-	36.4	-	0.12	0.073
04	C_1	32.9(72.5)	126,000 (15,100)	275	53.5	-	5.94	-	-	-	-	-	-	-	-	-
10	C_1	31.6(69.6)	180,000 (21,600)	1,170	1.31	0.043	0.61	-	72.0	364	-	-	10.9	-	-	-
11	C_1	8.8(19.5)	374,000 (44,900)	3,240	310	.019	15.5	34.0	-	-	-	-	-	-	-	0.247
19	C_1	11.3(25.0)	108,000 (13,000)	253	14.9	0.73	17.1	9.1	95.7	231	-	61.6	19.5	[illegible]	0.002	0.073
15	C_1	11.1(24.4)	10,200 (1,230)	420	22.0	0.0	0.018	-	143	12.8	-	-	-	-	-	-
		RWL		1,060	80.3	0.20	7.83	21.6	104	203	-	61.6	15.2	[illegible]	0.002	0.16
01	C_2	0.74(1.64	100,000 (12,000)	2,020	875	0.50	29.2	-	224	-	-	-	-	-	-	-
05	D	8.99(19.8	8,500 (1,020)	8.5	0.18	0.001	0.18	-	0.48	-	-	-	1.45	-	-	-
17	D	24.8 (54.7	6,420 (770)	20.7	0.26	0.0004	0.34	-	6.02	0.53	-	-	0.57	-	-	-
18	D	5.1 (11.2	5,360 (643)	0.0	0.08	0.20	0.044	0.17	-	-	-	-	-	-	-	-
03	D	30.4 (67.0	38,200 (4,580)	15.9	0.18	0.01	0.045	1.38	1.03	1.03	0.007	5.82	-	-	0.001	-
		RWL		11.3	0.18	0.053	0.15	0.78	2.51	0.52	0.007	5.82	1.01	-	0.001	-
05	E[2]	9.2 (99)	7,000 (172)	3.36 (0.69)	0.40 (0.081)	0.0002 (0.00005)	0.098 (0.020)	- (-)	0.37 (0.075)	- (-)	- (-)	- (-)	0.54 (0.11)	- (-)	- (-)	- (-)
17	E[2]	37.5 (404)	13,800 (340)	6.49 (1.33)	0.18 (0.038)	0.0005 (0.0001)	0.23 (0.048)	- (-)	0.94 (0.192)	1.27 (0.26)	- (-)	- (-)	1.02 (0.21)	- (-)	- (-)	- (-)
14	E[2]	7.9 (85)	13,800 (340)	13.1 (2.68)	0.63 (0.13)	0.005 (0.001)	0.12 (0.025)	0.39 (0.08)	- (-)	2.05 0.42	- (-)	- (-)	- (-)	- (-)	- (-)	- (-)

[1] kg/kkg production equivalent to lbs/1,000 lbs production.
[2] RWL's for subcategory E are expressed in terms of kg/1,000 m^2 gross floor area (lbs/1,000 ft^2)
-Data not reported

DRAFT

Table VA-4
(Continued)

Plant No.	Subcategory	Production kkg/day (1,000 lb/day)	Flow L/kkg prod. (gal/1,000 lb prod.)	Fe	Na	Pb	Hg	Mn	Cu	K	Cr	Zn	Se	Cd	Al	As	Ba
04	A	2.2 (4.9)	469,000 (56,300)	-	-	-	-	-	-	-	-	-	-	-	-	-	-
01	A	3.0 (6.7)	95,000 (11,400)	-	55.1	-	-	-	-	-	-	-	-	-	-	-	-
19	A	2.4 (5.3)	672,000 (80,660)	-	101	-	-	-	-	42.4	0.074	-	-	-	-	-	-
20	A	3.3 (7.2)	289,000 (34,700)	0.0	-	-	-	-	-	-	-	-	-	-	-	-	-
02	A	1.4 (3.2)	1,400,000 (168,000)	-	-	-	-	-	-	-	-	-	-	-	69.5	-	-
09	A	0.6 (1.4)	2,860,000 (343,000)	-	726	0.0	0.0	0.014	0.0	50.3	0.0	0.0	0.21	0.0	0.0	0.47	0.0
		RWL		0.0	294	0.0	0.0	0.014	0.0	46.4	0.037	0.0	0.21	0.0	34.8	0.47	0.0
12	B	0.15(0.34)	287,000 (34,400)	-	355	-	-	-	-	-	-	-	-	-	0.27	-	-
08	B	0.06(0.14)	992,000 (119,000)	-	-	-	-	-	-	-	-	-	-	-	-	-	-
17	B	1.94(4.28)	397,000 (47,600)	0.26	-	0.065	0.002	-	0.051	-	-	0.14	-	-	-	-	-
		RWL		0.26	355	0.065	0.002	-	0.051	-	-	0.14	-	-	0.27	-	-
04	C_1	32.9(72.5)	126,000 (15,100)	-	-	-	-	-	-	-	-	-	-	-	-	-	-
10	C_1	31.6(69.6)	180,000 (21,600)	0.53	300	-	-	-	-	-	-	-	-	-	-	-	-
11	C_1	8.8(19.5)	374,000 (44,900)	-	-	-	-	-	-	-	-	-	-	-	-	-	-
19	C_1	11.3(25.0)	108,000 (13,000)	-	24.9	-	-	-	-	13.4	0.018	-	-	-	-	1.27	-
15	C_1	11.1(24.4)	10,200 (1,230)	-	-	-	-	-	-	-	-	-	-	-	-	-	-
		RWL		0.53	162	-	-	-	-	13.4	0.18	-	-	-	-	1.27	-
01	C_2	0.74(1.64)	100,000 (12,000)	-	285	-	-	-	-	1.99	-	43.5	-	-	-	-	-
05	D	8.99(19.8)	8,500 (1,020)	0.011	0.62	-	-	-	-	-	-	-	-	-	-	-	-
17	D	24.8 (54.7)	6,420 (770)	0.006	-	0.001	0.002	-	0.001	-	-	0.003	-	-	-	-	-
18	D	5.1 (11.2)	5,360 (643)	-	-	-	-	-	-	-	-	-	-	-	-	-	-
03	D	30.4 (67.0)	38,200 (4,580)	0.026	-	0.005	0.00002	-	0.008	-	-	0.034	-	-	-	-	-
		RWL		0.014	0.62	0.003	0.001	-	0.004	-	-	0.018	-	-	-	-	-
05	E^2	9.2 (99)	7,000 (172)	0.002 (0.0004)	0.27 (0.056)	- (-)	- (-)	- (-)	- (-)	- (-)	- (-)	- (-)	- (-)	- (-)	- (-)	- (-)	- (-)
17	E^2	37.5 (404)	13,800 (340)	0.010 (0.002)	- (-)	0.001 (0.0003)	0.00005 (0.00001)	- (-)	0.005 (0.001)	- (-)	- (-)	0.014 (0.003)	- (-)	- (-)	- (-)	- (-)	- (-)
14	E^2	7.9 (85)	13,800 (340)	- (-)	- (-)	- (-)	- (-)	- (-)	- (-)	- (-)	- (-)	- (-)	- (-)	- (-)	- (-)	- (-)	- (-)

[1] kg/kkg production equivalent to lbs/1,000 lbs production.
[2] RWL's for subcategory E are expressed in terms of kg/1,000 m^2 gross floor area (lbs/1,000 ft^2)
- Data not reported

B. Gum and Wood Chemicals Industry

The process RWL data for the six subcategories in the Gum and Wood Chemicals Industry are presented individually in the following text. Subsequent discussions in this section will relate these data to a total data base, and compare waste loadings and concentrations between subcategories.

Subcategory A - Char and Charcoal Briquets

There are no wastewater discharges from the process operations in Subcategory A. For the operation as it is described in Section IV, Figure IVB-1 it is anticipated that stormwater runoff would carry suspended solids loadings. However, much of the dust problem and suspended solids loading in stormwater runoff could be controlled by alternate materials handling systems.

For example, buggies could be used to transport the materials without the need for rehandling and thereby eliminate excessive fines production. Furthermore, it is anticipated that no wastewater will be generated by the recovery of condensable by-products in the proposed recovery operation. In fact, this recovery (air pollution control) operation should be an additional water consumer because of evaporative losses.

Based on the above observation, it can be concluded that charcoal production and hardwood distillation can be operated with no wastewater pollutant discharge.

Subcategory B - Gum Rosin and Turpentine

In the manufacturing processes for gum rosin and turpentine as they are depicted in Figure IVB-2, there are three possible sources of process wastewaters: crude gum wash wastewater, still condensate (low wine), and dehydration brine. Plant No.55 recycled the still condensate back in the process to wash the crude gum stock. Despite the recycled wastewater stream, Plant No.55's RWL's were much higher than Plant No.52's RWL's, as the following tabulation shows:

	Flow (L/kkg)	BOD_5 kg/kkg	COD kg/kkg	TOC kg/kkg
Plant No. 55				
Historical	648	8.11	15.47	5.54[1]
Survey	742	4.39	8.29	3.06
Weighted Average	653	7.88	15.0	5.39
Plant No. 52	402	0.99	1.79	0.33
Subcategory II Average	528	4.44	8.40	2.86

[1] Calculated as follows: $TOC_{Historical} = COD_{Historical} (TOC/COD)_{Survey}$

The historical RWL data reported for Plant No.55 represented the average of 31 pieces of data while the survey RWL data were developed from 2 composite samples. The weighted average RWL reported for Plant No.55 was developed using the size of the respective data bases as the weighting factor.

The disparity of the RWL's was discussed with personnel from both plants. These discussions uncovered several small differences in operation between the two plants:

1. Plant No.52 uses much less wash water than Plant No. 55 (106 L/kkg vs. 695 L/kkg).

2. Plant No.52 treats the crude gum with oxalic acid in the melter vat and probably removes much of the insoluble oxalate salt in the filtration process as a solid waste.

3. Plant No.55 uses greater quantities of oxalic acid. However, because small quantities are involved and because oxalic acid is a highly oxidized compound, it is estimated that items 2 and 3 would account for less than 0.2 lbs BOD/1,000 lbs product.

Subcategory C - Wood Rosin, Turpentine and Pine Oil

The manufacturing processes for wood rosin, turpentine and pine oil illustrated in Figure IVB-3 produce no wastewater discharge from stump washing. The process wastewater includes stripping and vacuum jet steam condensates and unit washdown wastewaters. The pertinent RWL's are:

Flow (L/kkg)	BOD_5 kg/kkg	COD kg/kkg	TOC kg/kkg
9,470	6.49	12.6	4.14

Subcategory D - Tall Oil Rosin, Pitch and Fatty Acids

Figure IVB-4, which depicts the fractionation and refining of crude tall oil, shows that the sources of process wastewater include the acid treatment and overflow, if any, from the recirculated evaporative cooling system. Additional process loads are contributed by process washdowns and quality control laboratory wastes. The plant's control of contact cooling water by means of the recirculated evaporative cooling system is considered exemplary for the crude tall oil processing industry. Discussions with plant operating personnel revealed that separable organics which float to the top of the recirculation system's

reservoir are recovered and recycled through the process and that a net water makeup is usually required to maintain level in the reservoir. No overflow from the reservoir was observed during the survey and it is assumed that this is a normal operating condition. Sources of normal makeup to the reservoir would be vacuum jet steam stripping steam condensates and rainfall on the pond. These water makeup streams would tend to minimize dissolved solids buildup.

During the survey substantial contamination of the once-through, noncontact condenser cooling water was observed. Based on in-plant sampling performed during the survey, it was determined that part of the contamination was due to leaks in the shell-and-tube condensers on the fractionation columns and the remainder of the contamination due to an accidental leak or cross connection between the barometric contact condenser and the noncontact cooling systems. In addition, numerous sources of other noncontact cooling water and steam condensate were observed to be discharging to a combined sewer system.

To determine the RWL for the CTO refining and fractionation units, the plant's total wastewater was measured and sampled for a continuous 24-hour period. Concurrent grab composite samples were taken in-plant to determine the accidental contamination of once-through cooling water by faulty equipment, and this loading was subtracted from the plant's total effluent load. The flow RWL was computed to be 19,400 L/kkg. However, based on our understanding of the process, discussions with industry representatives and the fact that large amounts of water were used at the plant, but unaccounted for, it was estimated that approximately 25 percent of the 19,400 L/kkg flow RWL represented contaminated wastewater. Its source, as discussed previously, was the acid-treating unit, process washdowns and discharges from the quality control laboratory. The remaining portion of the flow RWL was classified as noncontact waters and therefore not included. The previous segregation of noncontact waters did not impact on the BOD, COD or TOC RWL data but merely effected the RWL concentration.

Based on the above discussion, the pertinent RWL's for Subcategory D are:

Flow (L/kkg)	BOD_5 kg/kkg	COD kg/kkg	TOC kg/kkg
4,860	3.11	7.08	1.58

Subcategory E - Essential Oils

The steam used for each batch extraction of oil of cedarwood yields a contaminated condensate. This represents the only process wastewater

discharge, however, from essential oils manufacture, and its RWL's are:

Flow (L/kkg)	BOD kg/kkg	COD kg/kkg	TOC kg/kkg
62,100	70.8	86.9	24.8

The impact of economy of scale on RWL's was evaluated at this facility by comparing the above figures with loadings which were reported on the plant's Corps of Engineers Application for Discharge to Navigable Waters. The latter data represented wastewaters discharged by a much larger bank of smaller retorts which had a similar production capacity. The modernization substantially affected extraction steam quantities, and therefore wastewater quantities, but apparently had little or no effect on other RWL parameters. A comparison of pertinent RWL data is provided in Table VB-1.

Table VB-1

Effect of Process Modernization

RWL's	1971	1974
Flow (L/kkg)	169,000	62,000
BOD (kg/kkg)	24.0	70.8
COD (kg/kkg)	59.4	86.9
TSS (kg/kkg)	10.1	0.37

Subcategory F - Rosin Derivatives

Process wastewaters from the manufacture of rosin derivatives, by the process shown in Figure IVB-6, include: water of reaction; sparge steam, if used; and vacuum jet steam. Noncontact cooling water is used in the kettle overhead condensers, and periodically on the kettle coils. The once-through cooling water was segregated from process wastewaters at both plants. Sample analyses confirm no pollutant pickup in the noncontact cooling water streams. Subcategory F RWL's are presented below:

	Flow (L/kkg)	BOD_5 (kg/kkg)	COD (kg/kkg)	TOC (kg/kkg)
Plant No. 57	395	4.11	7.33	3.10
Plant No. 55				
Historical	214	4.59	9.64	3.41[1]
Survey	273	5.26	11.00	3.90
Weighted Average	222	4.68	9.83	3.47
Subcategory F Average	309	4.40	8.58	3.29

[1]Calculated as follows: $TOC_{Historical} = COD_{Historical}(TOC/COD)_{Survey}$

The historical RWL data reported for Plant No. 55 represented the average of 18 pieces of data, while the survey RWL data were developed from 3 composite samples. The weighted average RWL reported for Plant No. 55 was developed using the size of the respective data bases as the weighting factor.

General Waste Characteristics

Table VB-2 lists the BPCTCA Raw Waste Load values assigned to each subcategory. These values include the following parameters:

1. Contact Process Wastewater Flow (liters/kkg of product)
2. BOD Raw Waste Load (kg BOD/kkg of product)
3. COD Raw Waste Load (kg COD/kkg of product)
4. TOC Raw Waste Load (kg TOC/kkg of product)

Raw waste load data for all parameters analyzed in the field survey (except BOD_5, COD and TOC) are presented in Table VB-3.

For purposes of comparison, concentrations have been calculated for the BOD_5 parameter by dividing the BOD_5 loading by the corresponding contact process wastewater flow. Examination of these data indicates a variability in flows, loadings, and resulting concentrations.

It should be noted that the BOD_5 concentrations shown are based on wastewaters coming directly from the process and do not necessarily represent the waste concentrations which a treatment plant would receive. If the plant manufactured a single product which generated concentrated wastes, these might be diluted with contaminated cooling wastes and steam condensate or other noncontact waters prior to biological treatment, depending upon concentrations and economic considerations. In a multi-product plant, the concentrated wastewater might be diluted with less concentrated wastes from other processes.

Table VB-2
Gum and Wood Chemicals Industry

Major BPCTCA Process Raw Waste Loads

Subcategory	Product	Flow L/kkg Product (gal/1,000 lbs.)	BPCTCA Process Raw Waste Load: BOD_5 kg/kkg[1]	BOD_5 mg/L	COD kg/kkg[1]	COD mg/L	TOC kg/kkg[1]	TOC mg/L
A	Char and Charcoal Briquets		No Discharge of Process Wastewater Pollutants					
B	Gum Rosin and Turpentine	528 (63.4)	4.44	8,410	8.40	15,900	2.86	5,420
C	Wood Rosin, Turpentine, and Pine Oil	9,470 (1,140)	6.49	685	12.6	1,330	4.14	437
D	Tall Oil Rosin, Pitch, and Fatty Acids	4,860 (583)	3.11	640	7.08	1,460	1.58	325
E	Essential Oils	62,100 (7,450)	70.8	1,140	86.9	1,400	24.8	400
F	Rosin Derivatives	309 (37)	4.40	14,200	8.58	27,800	3.29	10,600

[1] kg/kkg product is equivalent to lbs/1,000 lbs. production

DRAFT

Table VB-3

Miscellaneous Raw Waste Load Data
for the Gum and Wood Chemicals Industry

RWL	Subcategory B - Gum Rosin and Turpentine	Subcategory C - Wood Rosin, Turpentine and Pine Oil	Subcategory D - Tall Oil Rosin, Pitch and Fatty Acids	Subcategory E - Essential Oils	Subcategory F - Rosin Derivatives
Flow					
L/kkg	550	9,470	4,860	62,070	319
TSS					
mg/L	138	31	Negative[1]	6	51
kg/kkg	0.095	0.29	Negative[1]	0.37	0.016
TDS					
mg/L	3,580	702	654	55	7,270
kg/kkg	1.92	6.65	3.18	3.41	2.32
Oil					
mg/L	424	50	325	0.5	357
kg/kkg	0.233	0.47	1.58	0.03	0.11
Acidity					
mg/L	2,500	11	82.	594	815
kg/kkg	1.38	0.10	0.40	36.8	0.26
Alkalinity					
mg/L	--	192	300	--	--
kg/kkg	--	1.82	1.46	--	--
TKN-N					
mg/L	21.8	4.2	--	8.4	13.1
kg/kkg	0.012	0.04	--	0.52	0.004
NH_3-N					
mg/L	9.1	--	--	0.14	13.00
kg/kkg	0.005	0.001	Negative[1]	0.01	0.006
NO_3-N					
mg/L	Interference	--	3.23	0.23	0.06
kg/kkg	--	--	0.0157	0.014	0.00002
T-P					
mg/L	2.2	0.4	--	0.01	0.7
kg/kkg	0.0012	0.0036	Negative[1]	0.0006	0.00021
Color Units					
mg/L	210	93	40	--	--
kg/kkg	--	--	--	--	--
SO_4					
mg/L	245	150	131	1.0	12.8
kg/kkg	0.134	1.42	0.64	0.06	0.004
Phenol					
mg/L	0.65	0.21	20.5	0.31	59.8
kg/kkg	0.00036	0.002	0.10	0.019	0.019
Ca					
mg/L	54.5	3.5	3.29	0.5	40.8
kg/kkg	0.030	1.25	0.016	0.03	0.0130
Mg					
mg/L	2.9	15.2	--	0.10	8.84
kg/kkg	0.0016	0.14	Negative[1]	0.006	0.0028
Cn					
mg/L	0.03	--	--	--	--
kg/kkg	--	--	--	--	--
Zn					
mg/L	14.9	0.25	--	--	6.67
kg/kkg	0.0082	0.0024	--	--	0.0021
Cl					
mg/L	818	17.7	2.1	2.2	17.2
kg/kkg	0.10	0.17	0.01	0.14	0.055

[1] Background TSS contributions exceeded the net increase across the process, resulting in a negative TSS - RWL.

C. Pesticides and Agricultural Chemicals Industry

The process RWL data for the five subcategories in the Pesticides and Agricultural Chemicals industry are presented individually in the following text. Subsequent discussions in this section will relate these data to a total data base, and compare waste loadings and concentrations between subcategories.

Subcategory A - Halogenated Organic Pesticides

In the manufacturing processes for Halogenated Organic pesticides illustrated in Figures IVC-1, IVC-2, IVC-3, IVC-4, IVC-5, IVC-6, the principal sources of high organic wastes are decanting, distillation and stripping operations. In addition spillage, washdowns and run-off can also be significant sources of high organic and solids loadings. A summary of pertinent wastewater characteristics for wastes from processing units utilized in the manufacture of halogenated organic pesticides is contained in Table VC-1.

Subcategory B - Organo-Phosphorus Pesticides

Sources of wastewater from the manufacture of organo-phosphorus pesticides by the processes shown in Figures IVC-7 and IVC-8 include: decanter units, distillation towers, overhead collectors, solvent strippers, caustic scrubbers, contact cooling, hydrolyzing, product and equipment washing. Table VC-2 contains a summary of wastewater characteristics for wastes from processing units commonly used in the production of organo-phosphorus pesticides.

Subcategory C - Organo-Nitrogen Pesticides

The principal sources of wastewater in the manufacturing processes for organo-nitrogen pesticides, illustrated in Figures IVC-9 through IVC-14 are: decanting operations, extractor/precipitator units, scrubbing operations, solvent stripping, product purification, vessel rinsing, spillage and equipment washdown. A summary of the wastewater characteristics associated with these unit operations is contained in Table VC-3.

Subcategory D - Metallo-Organic Pesticides

In the manufacturing processes for metallo-organic pesticides illustrated in Figures IVC-15 and IVC-16, the principal sources of wastewater are: by-product stripping, product washing, caustic scrubbing, tank and reactor clean-out and area washdowns. The wastewater characteristics associated with these operations are summarized in Table VC-4.

TABLE VC-1

Summary of Potential Process - Associated Wastewater Sources from Halogenated Organic Pesticide Production

Processing Unit	Source	Nature of Wastewater Contaminants
Wet scrubber	Acidic solution	Low pH, moderately high flow rate, little organic wastes
Caustic soda scrubber	Spent caustic solution	High pH, low average flow rate, high dissolved solids, low organics
Intermediate product neutralizer	Spillage	Low waste loss, pH variable, high organic, high alkalinity, high dissolved solids
Decanter	Aqueous layer	High salt content, generally low dissolved organic, separable organics sludge
	Organic layer	High organic, low dissolved organic salt or sludge
Distillation tower	Distillation residues and tars	High organic, low solubility in water, high chlorine content
Settling tank	Spent acid	Low pH, intermittent flow, moderate organic content
Product washers	Neutralized aqueous wastes	High salt content, organic product loss, high pH, high alkalinity, high dissolved solids
Crystallizer, dryer, flaker, prilling	Dusts, mists	High toxic organics, high total suspended solids
Dust wet scrubbers	Aqueous suspension	High total suspended solids, high toxic organics
Solvent strippers	Stripper clean out rinse water	High organic, low flow
Acid recovery unit	Liquid wastes	High pH
Tanks and reactors	Cleanout rinse water and wasted solvents	Intermittent flows, high organic, high salt content (condensation reactions & neutralizations), high dissolved solids
Centrifuge	Mother liquor	High organic, generally toxic
Vacuum jets	Vacuumed Gases	Low organic, highly acidic
All plant areas	Run-off, area washdowns	Intermittent flow, low organics, variable pH, variable suspended solids, variable salt content

DRAFT

TABLE VC-2

Summary of Potential Process-Associated Wastewater Sources from Production of Organo-Phosphorus Pesticides

Processing Unit	Source	Nature of Wastewater Contaminants
Solvent recovery	Aqueous layer	High salt content, high pH, intermittent flow rate, toxic components, some "intermediate" product
Caustic scrubbers	Vented gases	High pH, high volume, low organic
Hydrolyzer/extractor	Aqueous layer	High pH, high COD, high dissolved solids, possible separable organic sludge
Decanter	Aqueous layer	High salt content, generally low dissolved organic, separable organic sludge
	Organic layer	High organic, low dissolved organic-salt and sludge
Overheads collector	Dusts, mists, vapors	High toxic organics, high total suspended solids
Distillation tower	Residues and tars	High organic, low water solubility
Intermediate product reactor	Reaction product residues	Intermittent flow, high dissolved solids, pH variable, organic content variable
Product washers	Neutralized aqueous wastes	High salt content, organic product loss, high pH, High alkalinity, high dissolved solids, intermittent flow
Product recovery	Aqueous wastes	High toxic organics, low flow
Solvent strippers	Stripper clean-out rinse water	High organic, low flow
Tank and reactors	Clean-out rinse water and wasted solvent	Intermittent flow, high organic, high salt content (condensation and neutralization reactions), high dissolved solids
Vacuum jets	Vacuumed gases	Low organic, generally acidic
All plant areas	Run-off, area washdowns	Intermittent flow, low organics, variable pH, suspended solids, and salt content

DRAFT

TABLE VC-3

Summary of Potential Process - Associated Wastewater Sources from Organo-Nitrogen Production

Processing Unit	Source	Nature of Wastewater Contaminants
Caustic scrubber	Vented process gases	High pH, possible by-product HCN, high flow, [illegible] organics
Solvent stripper	Aqueous fraction	High dissolved organics
Air pollution control equipment	Aqueous suspension	High suspended solids, relatively low dissolved organics and solids
Extractor/precipatator	Aqueous wastes	High dissolved and suspended organics, high pH
Intermediate product purification	Neutralized aqueous wastes	High salt content, organic product loss, pH, and alkalinity. High dissolved organics and dissolved solids.
Filtration	Filtrate	Variable dissolved organics. High pH, alkalinity, dissolved organics and dissolved solids.
Tanks and reactors	Cleanout rinse water and wasted solvents	High soluble organics and by-product salts
Reactors	Aqueous wastes	Brine wastes. High dissolved solids and organics. Variable pH, i.e., either very high of low pH.
Purification	Aqueous wastes	High dissolved organics and solids
Extractor	Aqueous phase	High pH. High dissolved organics and solids. High NH_3-N
Precipitator	Aqueous wastes	Dissolved solids and residual organics
Scrubber from cyanuric chloride unit	Scrubber and filter water	High pH. Cyanide wastewater, low organics, high dissolved solids
Decanter	Aqueous phase	High dissolved organics, NH_3-N and T-K-N
Nitrators	Vent gas scrubbers	High nitrates, dissolved solids and pH
Incinerator exhaust scrubbers	Scrubber water	Dissolved inorganics. High pH

DRAFT

TABLE VC-4

Summary of Potential Process - Associated Wastewater Sources From Metallo-Organic Production

Processing Unit	Source	Nature of Wastewater Contaminants
Caustic scrubber	Spent caustic solution	High pH, alkalinity, TDS and sulfur content. Low average flow rates. Some dissolved organics.
Intermediate recovery	Water wash, washdown	High TDS, salt content. Arsenic-contaminated brine. Separable organic.
Raw material drum washer	Drum wash water, spills (in recovery)	High arsenic content. No organics. Toxic.
Slurry wash	Product rinse water	High TDS and sulfidic wastes. Low average flow rates. Dissolved and separable organics.
Multi-stage counter current washer	Water lost with scrubbed salts, clean-out rinse water	High suspended and dissolved solids. Variable heavy metal content. Relatively low flow rates. Very low organic content. Toxic.
Air pollution control	Scrubber water	High suspended and dissolved solids. Toxic. Medium flow rates. Low dissolved and separable organics.
By-product stripper	Aqueous fraction	Dissolved organics. High BOD and TOD. Neutral pH.
Tanks and reactors	Clean-out rinse water	Dissolved organics, and suspended and dissolved solids. Intermittent flow rate. Toxic.
All processing areas	Area washdowns	Dissolved and separable organics, and suspended and dissolved solids. Toxic.

DRAFT

Subcategory E - Formulators and Packagers

Washing and clearing operations are the principal sources of wastewater in formulating and packaging operations illustrated in Figure IVC-17. Air pollution control devices can also be a significant source of suspended and dissolved solids. Table VC-5 summarizes the wastewater characteristics for formulation and packaging operations.

Factors Affecting Wastewater Characteristics

The characteristics of the wastewater generated by a plant in the Pesticides and Agricultural Chemicals industry depend a great deal on various in-plant production procedures. In addition, general housekeeping reuse and recycle practices affect both the quantity and quality of wastewater generated by a particular plant. Some of the factors that can significantly influence a plant's wastewater characteristics are discussed below:

1. The large fluctuations in flow rates between plants are generally attributable to the use of scrubbers for air pollution control and water management techniques employed in housekeeping and maintenance practices. In addition, fluctuations in flow within individual plants are common, due to the batch type of processing employed throughout the industry. Fluctuations in flow rate are considerable within the formulation segment of the industry. This is attributable to the different types of formulations. Dry-based formulations produce little discharge, while solvent-based and water-based formulations can contribute significant flows.

2. The type of scrubber used for air pollution control can also affect the wastewater characteristics. Compared to water scrubbers, caustic soda scrubbers contribute less flow, but the wastewater typically has high pH and dissolved-solids levels and low organic content.

3. The use of barometric condensers and vacuum sources can have a significant effect on the quantity and quality of wastewater generated within a particular plant, depending on the nature of the materials entering the discharge water stream.

4. In subcategories B, C and D, the BOD_5 loadings are extremely low compared to COD values. This can be attributed to the toxic nature of some of the waste streams.

TABLE VC-5

Summary of Potential Process - Associated Wastewater Sources from Formulators and Packagers

Processing Unit	Source	Nature of Wastewater Contaminants
Mix tank	Condensate from equipment steam cleaning	Dissolved organics, and suspended and dissolved solids. Non-continuous flow rate, and relatively low flow. pH variable.
Air pollution control equipment	Scrubber water	High suspended and dissolved solids, and dissolved organics. Relatively low flow rate.
Drum washers	Rinse water, floor drains, and caustic solution	Dissolved organics, and suspended and dissolved solids. High pH.
Formulation lines and filling equipment	Wash water and steam condensate from clean out	Dissolved organics, and suspended and dissolved solids. A major source of wastewater.
All product formulation and blending areas	Area washdown and clean-up water, spills, leaks	Dissolved organics, and suspended and dissolved solids.
Warehouse, technical active ingredient storage	Spills, leaks, run-off	Dissolved organics, and suspended and dissolved solids.

DRAFT

5. Other sources of wastewater not easily defined are rinse waters from cleaning of solvent strippers, reactors and tanks. The quantity of water used for such cleaning operations is highly variable; consequently, the concentration of soluble organics and by-product salts varied considerably. General area washdowns are also a source of wastewater, although generally low in organic content; other parameters, such as pH, oil, suspended solids and salt content, are highly variable. Flows for cleanout and washdown operations are variable and intermittent.

6. Another undefinable quantity is spillage of intermediates and final products. This type of loss contributes high organics and dissolved solids.

Raw Waste Loads

Raw Waste Loads (RWL) were computed for each of the plants visited during the study survey period. Only contact process wastewaters were used in calculating these loading values. Development of the Raw Waste Loads (RWL) was accomplished in a stepwise fashion from the data obtained in the field. The RWL data relating to individual manufacturing processes were grouped according to the subcategory to which the processes were assigned. The RWL values computed for the plants surveyed are shown by subcategory in Tables VC-6 through VC-10. The RWL values were determined by averaging the RWL values computed for the plants in each subcategory. These RWL values are also shown in Tables VC-6 through VC-10. RWL values for TSS were not developed for any of the subcategories. Instead, allowable TSS effluent concentrations are proposed. This approach was taken because of the fact that suspended solids will be developed in any biological wastewater treatment system, and it is, therefore, more convenient to establish an allowable TSS effluent concentration. Due to the toxic nature of pesticide wastes, BOD_5 raw waste loads have little meaning; consequently, characterization of pesticide wastes by BOD_5 should be avoided. Table VC-11 presents a summary of RWL parameter ranges for each subcategory.

The raw waste load data presented in Tables VC-6 through VC-10 include wastes handled at incineration, deep-well, and disposal contractor facilities. As such, they are not representative of the wastewaters normally treated in wastewater treatment facilities, particularly biological treatment systems.

Table VC-6

Raw Waste Loads for Halogenated Organic Pesticide Plants
(Subcategory A)

Plant[1]	Product[2]	Flow[3]		COD		BOD_5		TOC		TSS		Oil		TDS		Phenol		Chlor
		L/kkg	(gal/1,000 lbs)	kg/kkg	mg/L	kg/kkg	mg/L	kg/kkg	mg/L	kg/kkg	mg/L	kg/kkg	mg/L	kg/kkg	mg/L	kg/kkg	mg/L	kg/kkg
64	A	-	-	-	-	-	-	-	-	-	-	-	-	7.5	3,580	0.01	0.5	-
	B	10,000	(1,200)	160	16,000	85	8,500	-	-	-	-	-	-	950	95,000	-	-	720
70	C	400,000	(48,000)	-	-	-	-	-	-	4	10	-	-	-	-	-	-	-
	D	86,700	(10,400)	35	400	-	-	-	-	39	450	-	-	-	-	-	-	-
	E	400,000	(48,000)	-	-	-	-	-	-	79	198	-	-	-	-	-	-	-
64[4]	A	20,800	(2,500)	17	810	2.5	120	11.5	550	1	48	0.06	3	32	1,550	0.01	0.5	-
	B	10,000	(1,200)	144	14,400	33	3,300	81	8,000	1	100	43	4,300	1,150	115,000	2	200	31
70[4]	G	144,000	(17,300)	-	-	-	-	-	-	-	-	-	-	-	-	-	-	-
	H	315,000	(37,800)	784	2,490	567	1,800	190	603	3	10	2	6	231	733	0.01	0.03	29
Raw Waste Load[5]		145,000	(17,400)	249		218		94		21		15		396		0.01		374

[1] Historical plant data unless otherwise noted.
[2] Product identification: A-2, 4-D and its salts, 2,4-5-T, or dalapon; B-PCP or Na-PCP; C,D,E,-heptachlor, endrin, or isodrin; G,H-heptachlor or endrin.
[3] Includes all process wastewaters, including area and equipment washdowns and contaiminated runoff.
[4] Data obtained during plant visits via sample collection and analyses by Weston personnel.
[5] Raw waste load values were obtained by giving historical and plant visit data equal weighting. Since historical data points are generally based on a limited number of individual data points, this is a reasonable method of data treatment. In the case of duplicated data (i.e. historical as well as plant visit data for the same product and plant) only the historical data were used to determine the RWL.

NOTES:

Dash (-): Data not reported
Kg/kkg production is equivalent to lbs/1,000 lbs. product.

TABLE VC-7

Raw Waste Loads for Organo-Phosphorus Pesticide Plants
(Subcategory B)

Plant[1]	Product[2]	Flow[3] L/kkg	Flow[3] (gal/1,000 lbs.)	COD kg/kkg	COD mg/L	BOD_5 kg/kkg	BOD_5 mg/L	TOC kg/kkg	TOC mg/L	TSS kg/kkg	TSS mg/L	Oil kg/kkg	Oil mg/L
61	A	107,000	(12,900)	333	3,110	-	-	-	-	-	-	-	-
	B	8,250	(989)	332	40,200	-	-	-	-	-	-	-	-
	C	60,500	(7,200)	192	3,150	-	-	-	-	-	-	-	-
	D	55,700	(6,680)	499	8,910	-	-	-	-	-	-	-	-
	E	11,900	(1,430)	46	3,850	-	-	-	-	-	-	-	-
	F	62,100	(7,440)	192	3,100	-	-	-	-	-	-	-	-
	G	7,510	(900)	315	42,000	-	-	-	-	-	-	-	-
	H	54,400	(6 530)	170	3,150	-	-	-	-	-	-	-	-
63	I	49,600	(5,950)	108	2,160	-	-	-	-	-	-	-	-
	J	42,900	(5,140)	155	3,600	-	-	-	-	-	-	-	-
	JJ	42,900	(5,150)	177	4,100	-	-	73	1,700	-	-	-	-
64	K	2,780	(333)	45	19,700	1.5	540	-	-	-	-	-	-
65	L	12,800	(1,530)	79	6,100	-	-	-	-	-	-	-	-
68	M	31,400	(3,760)	-	-	-	-	-	-	-	-	-	-
	N	5,340	(640)	-	-	-	-	-	-	-	-	-	-
	O	1,490	(179)	-	-	-	-	-	-	-	-	-	-
	P	21,100	(2,530)	-	-	-	-	-	-	-	-	-	-
72	R	69,800	(8,380)	-	-	-	-	-	-	-	-	-	-
68[4]	V	14,800	(1,780)	5	335	2	135	1.6	108	1.1	73	0.15	10
62[4]	S	20,000	(2,400)	312	15,600	27	1,350	77	3,850	1.1	55	0.4	20
61[4,5]	T	46,000	(5,510)	195	4,240	44	955	43	934	0.7	15	2.7	59
64[4]	U	2,780	(333)	37	12,500			19	6,830	0.1	36	20	7,200
Raw Waste Load[6]		33,200	(4,000)	188		21		43		0.8		5.8	

Notes

Dash (-): Data not reported.
kg/kkg product is equivalent to lbs/1,000 lbs. product.

1 Historical plant data unless otherwise noted

2 A, B, C, D, E, F, G, & H includes coumaphos, disulfoton, azinphosmethyl, mathamidophos, fensulfothion, tenthion, dementon, or methyl demeton. I, J & JJ includes parathion, me-parathion or Niran 6-3. K is a composite of chlorpyrifos, crufomate and ronnel. L is a composite of me-parathion & Aspon. M, N, O & P can be sterofos, meviphos, naledanat dichlorvos. V-composite of sterofos, dichlorvos, naled & meviphos, R-composite of fonofos, carbophenothion & bensulide, S-diazion, T-composite of coumaphos, disulfonton, ozinphosmethyl.

3 Includes all process wastewaters, including area washdowns and contaminated run-off.

4 Data obtained during plant visits via sample collection and analyses.

5 Includes low quantities of employee showers and washing wastewaters.

6 Raw waste load values were obtained by giving historical and plant visit data equal weighting. Since historical data points are generally based on a limited number of individual data points, this is a reasonable method of data treatment. In the case of duplicated data (i.e., historical as well as plant visit data for the same product and plant) only the historical data was used to determine the RWL.

Plant[1]	Product[2]	Flow[3]		TDS		T-P		Phenol		Chloride		NH_3-N		TKN	
		L/kkg	(gal/1,000 lbs.)	kg/kkg	mg/L	kg/kkg	mg/L	kg/kkg	mg/L	kg/kkg	mg/L	kg/kkg	mg/L	kg/kkg	mg/L
61	A	107,000	(12,900)	763	7,130	5.5	51	-	-	242	2,260	-	-	-	-
	B	8,250	(989)	1,750	210,000	57.0	6,900	-	-	1,220	147,000	-	-	-	-
	C	60,500	(7,250)	565	9,420	18.6	304	-	-	394	6,500	-	-	-	-
	D	55,700	(6,680)	2,790	49,800	43.0	770	-	-	1,830	33,000	295	5,300	-	-
	E	11,900	(1,430)	702	58,500	14.0	1,170	-	-	527	44,000	242	20,200	-	-
	F	62,100	(7,440)	1,030	16,600	7.2	115	-	-	357	5,700	-	-	-	-
	G	7,510	(900)	941	125,000	32.0	4,260	-	-	563	75,000	-	-	-	-
	H	54,400	(6,530)	1,040	19,250	105.0	1,930	-	-	396	700	122	2,200	-	-
63	I	49,600	(5,950)	-	-	-	-	17	340	-	-	-	-	-	-
	J	42,900	(5,140)	-	-	-	-	11	255	-	-	-	-	-	-
	JJ	42,900	(5,150)	814	19,000	9	210	0.01	0.3	296	6,900	-	-	-	-
64	K	2,780	(333)	240	86,000	53	19,000	-	-	-	-	-	-	-	-
65	L	12,800	(1,530)	-	-	-	-	-	-	-	-	-	-	-	-
68	M	31,400	(3,760)	-	-	-	-	-	-	-	-	-	-	-	-
	N	5,340	(640)	-	-	-	-	-	-	-	-	-	-	-	-
	O	1,490	(179)	-	-	-	-	-	-	-	-	-	-	-	-
	P	21,100	(2,530)	-	-	-	-	-	-	-	-	-	-	-	-
68[4]	V	14,800	(1,780)	620	41,500	0.03	2	0.01	0.6	-	-	0.3	2	0.2	-
72	R	69,800	(8,380)	-	-	-	-	-	-	-	-	-	-	-	-
62[4]	S	20,000	(2,400)	1,080	54,000	5	250	0.01	0.5	1,480	74,000	17	850	3	13
61[4]	T	46,000	(5,510)	682	14,800	28	610	0.5	11	-	-	29	630	434	9,400
64[4]	U	2,780	(333)	222	79,000	6	2,150	0.1	36	91		0.7	250	0.7	31
Raw Waste Load[5]		33,200	4,000	880		24		4.1		700		88.2		1.3	

Notes.

Dash (-): Data not available
kg/kkg product is equivalent to lbs/1,000 lbs product.

1 Historical plant data unless otherwise noted.

2 A, B, C, E, F, G, and H can be coumaphos, disulfoton, a inphosmethyl, methamidophos, fensulfothion, fenthion, demeton, or methyl demeton, I, J, and JJ can be parathion, me-parathion or Niran 6-3. K is a composite of chlorpyrifos, crufomate and ronnel. L is a composite of me-parathion and Aspon. M, N, O and P can be sterofos, mevinphos, haledanat dichlorvos V-composite of sterofos, dichlorvos, haled and meviphos, R-composite of fonos, carbophenothion and bonsulide, S-diazion, T-composite coumphos, disulfonton, ozinphosmethyl, fenthion, metamidophos, V-composite of ronnel and chlorpyrifos.

3 Includes all process wastewaters, including area in equipment washdowns and contaminated run-off.

4 Includes low quantities of employee shower and washing wastewaters.

5 Raw waste load values were obtained by giving historical and plant visit data equal weighting. Since historical data points are generally based on a limited number of individual data points, this is a reasonable method of data treatment. In the case of duplicated data (i.e., historical as well as plant visit data for the same product and plant) only the historical data was used to determine the RWL.

Table VC-8

Raw Waste Loads
Organo-Nitrogen Pesticide Plants
(Subcategory C)

Plant[1]	Product[2]	Flow[3] L/kkg	Flow[3] (gal 1,000 lbs)	COD kg/kkg	COD mg/L	BOD_5 kg/kkg	BOD_5 mg/L	TOC kg/kkg	TOC mg/L	TSS kg/kkg	TSS mg/L	Oil kg/kkg	Oil mg/L
61	A	85,100	(10,200)	403	4,740	-	-	-	-	-	-	-	-
	B	51,600	(5,180)	77	1,480	-	-	-	-	-	-	-	-
62	C	45,000	(5,400)	-	-	37	820	-	-	-	-	-	-
	D	47,500	(5,700)	-	-	40	840	-	-	-	-	-	-
64	E	10,000	(1,200)	8	800	3	300	-	-	-	-	-	-
72	K	5,590	(670)	-	-	-	-	-	-	-	-	-	-
67	L	35,900	(4,300)	217	6,030	-	-	-	-	-	-	-	-
	M	50,200	(6,000)	195	3,900	-	-	-	-	-	-	-	-
	N	10,100	(1,210)	143	14,300	-	-	-	-	-	-	-	-
	O	4,170	(500)	30	7,150	-	-	-	-	-	-	-	-
	P	20,000	(2,400)	53	2,650	-	-	-	-	-	-	-	-
71	Q	51,700	(6,200)	40	770	18	350	-	-	-	-	-	-
	R	33,400	(4,000)	60	1,800	25	750	-	-	-	-	-	-
	S	68,800	(8,250)	116	1,680	34	495	-	-	-	-	-	-
	T	43,800	(5,250)	665	15,100	500	11,400	-	-	-	-	-	-
	U	116,000	(14,000)	925	8,000	650	5,600	-	-	-	-	-	-
	V	104,000	(12,500)	1,560	15,000	200	11,500	-	-	-	-	-	-
62[4]	F	45,000	(5,400)	630	14,000	108	2,400	234	5,200	83	1,845	0.02	0.5
64[4]	E	10,000	(1,200)	81	8,100	25	2,500	42	4,200	2	200	0.09	9
67[4]	G	97,200	(11,600)	222	2,300	112	1,155	41	420	1	10	-	-
	H	90,400	(10,800)	206	2,300	105	1,160	38	420	1	11	7.3	81
Literature[5]	J	50,000	(6,000)	500	10,000	Low	-	-	-	Low	-	-	-
Standard Raw Waste Load		49,000	(5,800)	323	5,800	220	3,020	89	2,560	22	517	2.5	30

Dash (-): Data not reported
kg/kkg product is equivalent to lbs/1,000 lbs product

[1] Historical plant data unless otherwise noted.

[2] Product identification: A,B-metribuzin or benzazimide; C,D-atrazine, simazine, propazine, ametryne, prometryne, sinstryne, Sumitol, terbatryne, prometone, or cyanazine; E-dinoseb; F-atrazine; G,H-alachlor or propachlor; J-typical organo-nitrogen compound; k-butylate, EPTC, vernolate, cycloate, molinate, or pebulate; L,M,N,O,P-alachlor, CDAA, propachlor, butachlor; Q,R,S,T,U,V-durion, dromacil, thiram, methomyl, linuron, or terbacil.

[3] Includes all process wastewaters including area and equipment washdowns and contaminated run-off.

[4] Data obtained during plant visits via sample collection and analyses.

[5] "The Pesticide Manufacturing Industry - Current Waste Treatment and Disposal Practices": U.S. Environmental Protection Agency, Water Pollution Control Research Series, January 1972.

[6] Raw waste load values were obtained by giving historical and plant visit data equal weighting. Since historical data points are generally based on a limited number of individual data points, this is a reasonable method of data treatment. In the case of duplicated data (i.e. historical as well as plant visit data for the same product and plant) only the historical data was used to determine the RWL.

Table VC-8
(continued)

Plant[1]	Product[2]	Flow[3]		TDS		Chloride		NH_3-N		T-P	
		L/kkg	(gal 1,000 lbs)	kg/kkg	mg/L	kg/kkg	mg/L	kg/kkg	mg/L	kg/kkg	mg/L
61	A	85,100	(10,200)	3,770	44,300	1,170	13,700	27	318	-	-
	B	51,600	(6,180)	333	6,400	227	4,400	-	-	-	-
62	C	45,000	(5,400)	897	19,900	847	18,800	-	-	8	178
	D	47,500	(5,700)	1,760	36,700	1,210	25,300	-	-	9	190
64	E	10,000	(1,200)	200	20,000	4.5	450	0.13	13	-	-
67	L	35,900	(4,300)	-	-	239	6,600	76	2,100	-	-
	M	50,200	(6,020)	-	-	124	2,500	14.5	288	-	-
	N	10,100	(1,210)	-	-	239	23,000	15	1,500	-	-
	O	4,170	(500)	-	-	-	-	-	-	-	-
	P	20,000	(2,400)	-	-	78	3,900	1.6	80	-	-
71	Q	51,700	(6,200)	-	-	-	-	-	-	-	-
	R	33,400	(4,000)	-	-	-	-	-	-	-	-
	S	68,800	(8.250)	-	-	-	-	-	-	-	-
	T	43,800	(5,250)	-	-	-	-	-	-	-	-
	U	117,000	(14,000)	-	-	-	-	-	-	-	-
	V	104,000	(12,500)	-	-	-	-	-	-	-	-
72	K	5,590	(670)	-	-	-	-	-	-	-	-
Literature[5]	J	50,000	(6,000)	2,000	40,000	5	100	-	-	25	500
62[4]	F	45,000	(5,400)	2,580	57,300	-	-	3	67	74	1,640
64[4]	E	10,000	(1,200)	388	38,800	26	2,600	2.5	250	2.5	250
67[4]	G	97,200	(1,200)	203	2,000	-	-	99	1,020	-	-
	H	90,400	(10,800)	189	2,000	-	-	82	910	-	-
Raw Waste Load[6]		48,900	5,870	123		379		32		23.7	

Notes:

Dash (-): Data not reported
kg/kkg os product is equivalent to lbs/1,000 lbs product

[1]Historical plant data unless otherwise noted

[2]Product identification: A,B-metribuzin or benzazimide; C,D-atrazine, simazine, propazine, ametryne, prometryne, sinstryne, Sumitol, terbatryne, prometone, or cyanazine; E-dinoseb; F-atrazine; G,H-alachlor or propachlor; J-typical organo-nitrogen compound; K-butylate, EPTC, vernolate, cycloate, molinate, or pebulate; L,M,N,O,P-alachlor, CDAA, propachlor, butachlor; Q,R,S,T,U,V-duiron, bromacil, thiram, methomyl, linuron, or terbacil.

[3]Includes all process wastewaters including area and equipment washdowns and contaminated run-off.

[4]Data obtained during plant visits via sample collection and analyses.

[5]"The Pesticide Manufacturing Industry - Current Waste Treatment and Disposal Practices" U.S. Environmental Protection Agency, Water Pollution Control Research Series, January 1972.

[6]Raw waste load values were obtained by giving historical and plant visit data equal weighting. Since historical data points are generally based on a limited number of individual data points, this is a reasonable method of data treatment. In the case of duplicated data (i.e. historical as well as plant visit data for the same product and plant) only the historical data was used to determine the RWL.

Table VC-9

Raw Waste Loads
Metallo-Organic Pesticide Plants
(Subcategory D)

Plant[1]	Product[2]	Flow[3]		COD		BOD_5		TOC		SS		Oil	
		L/kkg	(gal/1,000 lbs)	kg/kkg	mg/L	kg/kkg	mg/L	kg/kkg	mg/L	kg/kkg	mg/L	kg/kkg	mg/L
71	A	63,300	(7,590)	140	2,200	50	790	-	-	200	3,170	-	-
71	C	66,700	(8,000)	100	1,500	45	670	-	-	110	1,645	-	-
71[4]	B	274,000	(32,900)	123	450	6	22	21	77	906	3,300	4.5	16
Raw Waste Load[5]		135,000	(16,200)	121		34		21		405		4.5	

[1]Historical plant data unless otherwise noted.

[2]Product identification: A and B - manganese dithiocarbamates, C - zinc dithicarbamate.

[3]Includes process area washdowns and runoff.

[4]Data obtained during plant visits via sample collection and analyses

[5]Raw waste load values were obtained by giving historical and plant visit data equal weighting. Since historical data points are generally based on a limited number of individual data points, this is a reasonable method of data treatment. In the case of duplicated data (i.e., historical as well as plant visit data for the same product and plant) only the historical data was used to determine the RWL.

NOTES:

Dash (-): Data not reported.

kg/kkg of product is equivalent to lbs/1,000 lbs product

DRAFT

Table VC-9
(continued)

Plant[1]	Product[2]	Flow[3] L/kkg	Flow[3] (gal/1,000 lbs)	TDS kg/kkg	TDS mg/L	NH_3-N kg/kkg	NH_3-N mg/L	TKN kg/kkg	TKN mg/L	Metal kg/kkg	Metal mg/L
71	A	63,300	(7,590)	-	-	-	-	-	-	45 (Mn)	715
71	C	66,700	(8,000)	-	-	-	-	-	-	30	450
71[4]	B	274,000	(32,900)	8,150	29,700	202	737	231	843	369 (Mn)	1,350
Raw Waste Load[5]		135,000	(16,200)	8,150		202		231		148	

[1]Historical plant data unless otherwise noted.

[2]Product identification: A and B - manganese dithiocarbamates, C - zinc dithiocarbamate.

[3]Includes process area washdowns and runoff.

[4]Data obtained during plant visits via sample collection and analyses.

[5]Raw waste load values were obtained by giving historical and plant visit data equal weighting. Since historical data points are generally based on a limited number of individual data points, this is a reasonable method of data treatment. In the case of duplicated data (i.e., historical as well as plant visit data for the same product and plant) only the historical data was used to determine the RWL.

NOTES:

Dash (-): Data not reported.

kg/kkg of product is equivalent to lbs/1,000 lbs product.

DRAFT

Table VC-10

Raw Waste Loads
Formulators and Packagers
(Subcategory E)

Plant[1]	Flow[2,3] L/kkg[1] (gal/1,000 lbs)	COD kg/kkg[1]	COD mg/L	BOD_5 kg/kkg[1]	BOD_5 mg/L	TSS kg/kkg[1]	TSS mg/L	TOC kg/kkg[1]	TOC mg/L
69	41,700 (5,000)	252	6,040	67	1,610	-	-	-	-
Literature[5]	3,120 (374)	1.4	450	-	-	2.0	645	-	-
Literature[5,6]	420 (50)	0.18	450	0.12	286	0.08	190	-	-
66[4]	220 (26.3)	0.1	455	0.03	136	0.04	101	0.06	151
Raw Waste Load[7]	11,400 (1,350)	63		22		0.7		0.06	

Notes: Data in terms of unit of production of formulated/packaged product.
Dash (-): Data not available.

[1] Historical plant data unless otherwise noted.

[2] Includes all process wastewaters including area and equipment washdowns and contaminated run-off.

[3] kg/kkg of product is equivalent to lbs/1,000 product.

[4] Data obtained during plant visits via sample collection and analyses.

[5] "Pollution Control Technology of Pesticide Formulators and Packagers", National Agricultural Chemicals Association, Grant No. R-801577, 12 June 1974.

[6] Waste loads calculated from basic data presented in literature (Item 4).

[7] Raw waste load values were obtained by giving historical and plant visit data equal weighting. Since historical data points are generally based on a limited number of individual data points, this is a reasonable method of data treatment. In the case of duplicated data (i.e. historical as well as plant visit data for the same product and plant) only the historical data was used to determine the RWL.

Table VC-10
(continued)

Plant[1]	Flow[2] L/kkg[1] (gal/1,000 lbs)	TDS kg/kkg[1]	TDS mg/L	T-P kg/kkg[1]	T-P mg/L	Phenol kg/kkg[1]	Phenol mg/L
69	41,700 (5,000)	-	-	-	-	0.2	5
Literature [4]	3,120 (374)	2.0	645	-	-	-	-
Literature[4,5]	420 (50)	0.2	0.5	-	-	-	-
66[3]	220 (26.3)	0.2	1,000	nil	-	-	-
Raw Waste Load[6]	11,400 (1,350)	0.8	-	-	-	0.2	-

Notes: Dash (-): Data not available
kg/kkg of product is equivalent to lbs/1,000 Product

[1] Historican plant data unless otherwise noted

[2] Includes all process wastewaters including area and equipment washdowns and contaminated run-off.

[3] Data obtained during plant visits via sample collection and analyses.

[4] "Pollution Control Technology of Pesticide Formulators and Packagers", National Agricultural Chemicals Association, Grant No. R-801577, 12 June 1974.

[5] Waste loads calculated from basic data presented in literature (Item 4).

[6] Raw waste load values were obtained by giving historical and plant visit data equal weighting. Since historical data points are generally based on a limited number of individual data points, this is a reasonable method of data treatment. In the case of duplicated data (i.e. historical as well as plant visit data for the same product and plant) only the historical data was used to determine the RWL.

TABLE VC-11

Comparison of RWL Data

Pesticides and Agricultural Chemicals Industry

Parameter	Units	Range of Values				
		Subcategory A	Subcategory B	Subcategory C	Subcategory D	Subcategory
Flow	L/kkg	10,000 - 400,000	1,490 - 107,000	4,170 - 117,000	63,300 - 274,000	420 - 3,120
	(gal/1,000 lbs) product	(1,200 - 48,000)	(179 - 12,900)	(500 - 14,000)	(7,590 - 32,900)	(50.4 - 374
	gpd	0.17 - 1.72	0.09 - 1.5	0.06 - 0.65	0.06	0.005 - 0.06
BOD_5	kg/kkg[1]	2.5 - 567	1.5 - 44	3 - 1,200	6 - 50	0.03- 67
	mg/L	125 - 8,500	140 - 750	1,200 - 2,500	20 - 780	1 - 1,700
COD	kg/kkg[1]	2.5 - 784	5 - 499	8 - 1,560	100 - 140	0.1 - 252
	mg/L	850 - 16,000	350 - 1,850	2,400 - 14,000	450 - 2,200	1 - 7,000
TOC	kg/kkg[1]	11.5 - 190	1.6 - 77	38 - 234	21	0.06
	mg/L	650 - 8,400	100 - 4,000	450 - 5,300	80	--
TSS	kg/kkg[1]	1 - 79	0.1 - 1.1	1 - 83	110 - 906	0.04 - 2.0
	mg/L	100 - 250	10 - 100	10 - 1,800	1,700 - 3,000	--

[1] kg/kkg production is equivalent to lbs/1000 lbs production

Table VC-12 indicates the distribution of the raw waste COD loadings between the incineration/deep-well facilities and the more conventional type of wastewater treatment plant. Because wastes handled by incineration or deep-well facilities are usually very strong and toxic, BOD analyses are not reliable. Accordingly, COD was judged to be the best indication of the raw waste load distribution to the various treatment facilities operated at the plants visited.

It is difficult to attribute the raw waste loading of the strong, toxic wastes to the production of individual pesticides, because records of the strong waste flow and loadings contributions of the individual processes normally are not maintained. Therefore, Table VC-12 lists the waste loads only for the basic pesticide subcategories, i.e. halogenated, phosphorus, etc.

It can be seen from Table VC-12 that the percentage of waste material handled at incineration or deep well facilities can vary from zero to 100 percent. The residual raw waste loading to the wastewater treatment system varies appreciably from one plant to another. This variation is caused by differences in processing techniques and water management programs. Obvious examples of this phenomenon are Plant 66 compared to Plant 69, and Plant 68 versus Plant 62. Plants that have been historically subject to stringent environmental enforcement usually implement better end-of-pipe treatment and in-plant control systems, and both raw waste and final effluent loadings reflect this. (See Tables VC-7 and VC-10).

TABLE V-12

Distribution of Raw Waste COD Loadings

Plant	COD Loading: kg/kkg (lb1,000 lb)		
	Total RWL[1]	Incineration/Deep Well RWL[2]	RWL to WW Treatment
Halogenated Organics			
64	122	86	36
70[3]	784	0	784
Organo-Phosphorus			
61	195	0	195
62[4]	312	0	312
63	150	76	74
64	45	45	0
65	79	79	0
68	5	0	5
Organo-Nitrogen			
61	240	0	240
62[4]	630	0	630
64	81	81	0
67	137	0	125
Metallo-Organic			
71	125	0	125
Formulators			
66	0.1	0	0.1
69	252	0	252

[1] Includes wastes handled at the wastewater treatment plant, incinerator, deep well, and contract disposal service.
[2] Includes wastes handled at the incinerator, deep well, and contract disposal service.
[3] Effluent treated at municipal treatment system.
[4] Deep well disposal was practiced until recently (October 1974). Owing to well malfunction, wastewater treatment facilities received strong wastes.

D. Adhesive and Sealants Industry

General process flow diagrams (Figures IVD-1, IVD-2, IVD-3, and IVD-4) discussed in the previous section have indicated some of the wastewater generation points for the individual processes where information was readily available. However, physical sewer system layouts and plant designs prevented the determination of flow rates and analyses for process wastewater streams at points of origin. In the past, plants have been concerned principally with the combined wastewater streams instead of point sources of individual waste streams. Wastewater may emanate from within the process where it was required for the process operating conditions, it may be formed during the course of chemical reactions, or it may be used in washdown of process vessels, area housekeeping, and in laboratories.

The main source of wastewater from adhesive manufacturing processes is the washing of the process vessels and lines. The principal factors that contribute to high effluent loading rates in the washwater are related to tank and line clingage.

Analyses of wastewater streams are not normally performed because monitoring to provide effluent data for state regulatory bodies has not been required. Most of the Adhesive industries discharge directly to municipal sanitary sewer systems and have not had regular analyses performed on their wastewater discharges. Because of this absence of historical data within the Adhesive industry, it is difficult to establish variability in the pollutants discharged in the process wastewater.

A variety of disposal methods for adhesive waste are in use at the present time. The waste loads discharged from each of the subcategories do not reflect actual raw waste loads because in-plant pollution abatement measures currently practiced in the industry have a significant effect on discharges. The pollution abatement measures practiced by the industry include:

1. Using a small controlled rinsing with subsequent recycling of the rinse water rather than simple filling and draining of process vessels and lines.

2. Squeegeeing of clingage before rinsing where controlled rinsing of tanks is not practical.

3. Blowing out the pipe lines and pumping systems where the rinse cannot be re-worked or recycled.

4. Cleaning up accidental spills so that they do not get into the effluent.

5. Employing some type of holding or settling tank or pond for flow equalization and removal of suspended solids.

Any combination of these in-plant abatement measures can be found in the various plants of the Adhesive industry. This fact makes total raw wastewater characterization of the subcategories difficult.

Subcategory A - Animal Glue and Gelatin

Characterization of the plant wastewater in Subcategory A is best typified in the analytical data in Table VD-1. The characteristics of the raw waste given in Table VD-1 are typical of the strength of the wastewater from an old animal glue and gelatin plant, where wastewater flows and concentrations are probably higher than normal, as a result of old piping and other factors related to plant age, as well as housekeeping practices and in-plant measures.

The high total Kjeldahl-nitrogen (TKN) level originates in the glue and gelatin extraction process. Chrome leather scraps are used as raw material for glue production, and the chromium concentrations in the range shown would be typical of this waste. The weekly sampling data indicated that 95 percent of the time the pH was between 11 and 12. There are short periods when dilute sulfuric acid is used to neutralize finished lime stock, and the pH then may range between 4 and 6. However, these isolated incidents can be reduced by scheduling simultaneous dumping of lime vats. The grease concentration in the supernatant averaged approximately 10 percent of the total grease. The wastewater flow of 3 mgd during the sampling period appeared low when compared to historical flow information. During the early 1970's study, the wastewater flow averaged 5.4 mgd and ranged between 4.3 and 6.6 mgd. The daily average flow for the period from January 1973 to April 1974 was 4.0 mgd.

Subcategory B - Water-Based Adhesives

Characterization of the wastewater in subcategory B is best typified in the analytical data presented in Table VD-2. The data represent information collected from three different plants during the sampling period. The wastewater characteristics for these plants producing water-base emulsions, colloids, and dispersins are remarkably similar. Typical raw materials used include starches, dextrins, cellulosic materials, polyvinyl acetate, acrylic polymers, polyvinyl alcohol, and polyvinyl chloride.

Table VD-1

Characterization of Waste Discharge[1]
Adhesives and Sealants Industry
Subcategory A

Parameter	Data Collected During Sampling Period	Data From State and Federal Survey Reports of Early 1960's	Data Collected by Sewerage Commission in Early 1970's	
	mg/L	mg/L	mg/L	Range mg/L
BOD_5	3,720	2080	2750	1200 - 4820
COD	10,100	-	-	-
TOC	2,650	-	-	-
TSS	4,520	1740	3390	2700 - 4330
TKN	370	173	520	400 - 620
NH_3-N	16.3	-	-	-
Total Chromium	31	19	13	8.6 - 19.0
Total Hexane Soluble Grease	1,000	-	970	360 - 1460
Total Hexane Soluble Grease in Supernatant	-	-	73	22 - 243
Industrial Waste Flow (mgd)	3	-	5.4	4.3 - 6.6
pH, Units	9.2	11.6	11.5	11.3 - 11.7

[1]Based on 24 hour composite samples
- Data not reported

DRAFT

Table VD-2

Characterization of Waste Discharges
Subcategory B

Plant Number	Flow (mgd)	BOD_5 (mg/L)	COD (mg/L)	TOC (mg/L)	TSS (mg/L)	NH_3-N (mg/L)
29	0.003	2100	16,600	3800	2100	3.6
27	0.01	5600	16,200	7660	4280	18.0
28	0.01	4200	16,500	5300	3950	20.4

Table VD-3

Characterization of Waste Discharge
Subcategory C

Plant Number	Flow (mgd)	BOD_5 (mg/L)	COD (mg/L)	TOC (mg/L)	TSS (mg/L)	NH_3-N (mg/L)
23	0.006	13200	21,900	4200	36	18

Subcategories C and D - Solvent-Based Adhesives

Subcategories C and D include solvent solutions and cements and non-water-based adhesives. Raw materials include synthetic and natural resins, rosins, modified rosins, and elastomers. Although the products are similar, the manufacturing processes may differ slightly. The manufacturing process used in subcategory C generates contaminated wastewater, while that used in subcategory D does not. Noncontact cooling water is discharged in both subcategories, and process cleaning water may be discharged or recycled. Wastewater characteristics for subcategory C are shown in Table VD-3. All of the plants visited in subcategory D discharged noncontact cooling water only. Process vessels can be cleaned out with solvent, which can, in turn, be recycled back into the products.

Subcategory E - Hot Melt Thermoplastic Adhesives

There is no actual process water discharge from the production of hot melt thermoplastic adhesives (subcategory E). The hot melt adhesives are neither water- nor solvent-based adhesives, and they are not compatible with water. The only contaminated wastewater that might be discharged would be caustic washwater solutions. Two of the four plants visited in this subcategory never clean their process vessels with any type of water solution and suggest that this type of cleaning is not necessary. Instead of caustic and water, they use a hot wax solution which can be drummed and recycled back into the production of the same type or of similar products. Cleaning of the process vessels occurs only when changing from a dark-colored to a light-colored adhesive or when changing to non-compatible adhesives. The vessels may also be cleaned periodically as part of regular maintenance. During the sampling periods, there were never any discharges associated with the production of hot melt adhesives from any of the plants surveyed.

Subcategory F - Dry-Blended Adhesives

There is no process water or washwater discharge from the production of dry-blended adhesive materials (subcategory F). The dry-blended materials are completely solids and are neither water- nor solvent-based materials. The proper formulation and blending of the raw materials requires that absolutely no water be present in the mixing compartment. There should never be any discharge associated with this manufacturing process.

Summary of Raw Waste Loads

Raw waste loads in pounds per 1,000 pounds of production obtained during the sampling period for the subcategories of the Adhesives and Sealants industry are shown in Tables VD-4 and VC-5. Representative raw waste loads in pounds per 1,000 pounds of production, used to characterize the subcategories of the Adhesive and Sealants industry and to establish effluent limitations, are shown in Table VD-6. The values in Table VD-6 represent measures of central tendency. The arithmetic mean was chosen as the measure of central tendency to represent the subcategories in Table VD-6, since it acts as a kind of fulcrum or center of gravity of a set of observations, and thus is sensitive to extreme values. All observations of the group are taken into account, and increases or decreases are included to maintain a balance. The group of observations represented by the arithmetic mean in Table VD-6 are well presented because of the closeness of the observations in the group. The closeness of the observations in the group is shown in Table VD-7, which presents measures of variability for the data in Table VD-6, for subcategory B.

Table VD-4

Raw Waste Loads
Adhesives and Sealants Industry

Plant	Production (1000 lb/day)	Flow (mgd)	Flow (gal/1000 lb production)	Raw Waste Loads (lb/1000 lb production) BOD5	COD	TSS	TOC	NH3-N
Subcategory A								
21	99	3	30,000	942	2,520	1,140	669	4.2
Subcategory B								
29	18.6	0.003	161	2.8	22.3	2.9	5.1	0.005
27	110	0.01	91	4.3	12.3	3.3	5.8	0.02
28	116	0.01	86	3	12	3	4	0.01
Subcategory C								
23	147	0.006	41	4.4	7.3	0.012	1.4	0.006
Subcategory D								
29	21.5	-	-	-	-	-	-	-
28	37	0.07	1,890	0.5	-	0.5	1.1	0
25	431	0.35	825	0.13	0.37	0.45	0.09	0.001
Subcategory E								
28	30	0						
27	-	0						
26	-	0						
21	-	0						
			No discharges in Subcategories E and F					
Subcategory F								
28	-	0						
22	29.6	0						

DRAFT

Table VD-5

Raw Waste Loads - Adhesive and Sealants Industry

Plant Number	Subcategory	Production kkg/day (1,000 lb/day)	Flow l/kkg Production (gal/1,000 lb Production	kg/kkg Production[1] TDS	TKN	NO_3-N_1	Total P	Oil and Grease	Cl	SO_4	Sulfide	Total Hard	Ca	Mg	CN
21	A	44.9 (99)	250,000 (30,000)	800	93	0.1	0.8	254	121	218	0.08	--	318	7.3	--
29	B	8.4 (18.6)	1,340 (161)	21	0.5	0.02	0.02	0.4	1.5	2.3	--	--	2.6	0.5	--
27	B	49.9 (110)	760 (91)	6.7	0.05	0.0004	0.02	2	0.2	0.05	0.3	0.7	0.1	0.02	--
28	B	52.6 (116)	720 (86)	14	0.5	0.03	0.01	1.4	0.8	2.2	0.002	1.7	1.1	4.8	--
		SRWL		14	0.3	0.02	0.02	1.3	0.8	1.5	0.1	1.2	1.3	2.7	--
23	C	66.7 (147)	340 (41)	0.4	0.05	0.0001	0.0001	0.0003	0.03	--	--	--	0.0005	0.0001	--
29	D	9.75 (21.5)	-- --	--	--	--	--	--	--	--	--	--	--	--	--
28	D	16.8 (37)	15,700 (1,890)	--	--	--	--	--	--	--	--	--	--	--	--
25	D	195 (430)	6,870 (825)	5	0.03	0.002	0.002	0.25	1.4	0.4	--	0.4	0.04	0.005	--
28	E	(30)	0	0	0	0	0	0	0	0	0	0	0	0	0
27	E	-- --	0	0	0	0	0	0	0	0	0	0	0	0	0
26	E	-- --	0	0	0	0	0	0	0	0	0	0	0	0	0
21	E	-- --	0	0	0	0	0	0	0	0	0	0	0	0	0
28	F	-- --	0	0	0	0	0	0	0	0	0	0	0	0	0
22	F	13.4 (29.6)	0	0	0	0	0	0	0	0	0	0	0	0	0

[1] kg/kkg production is equivalent to lbs/1,000 lbs production

DRAFT

Table VD-5
(Continued)

Plant Number	Subcategory	Production kkg/day (1,000 lb/day)	Flow l/kkg Production (gal/1,000 lb Production		kg/kkg Production[1] Phenol	Fe	Na	Pb	Mg	Mn	Cu	K	Cr-T	Zn	Se	Cd	Al	As	Ba
21	A	44.9 (99)	250,000	(30,000)	0.6	4.5	66	0.05	--	0.1	0.08	0.9	7.9	2.2	--	--	0.9	0.008	--
29	B	8.4 (18.6)	1,340	(161)	0.001	0.03	1.8	--	0.0002	--	0.005	0.06	--	0.005	--	--	--	0.001	--
27	B	49.9 (110)	760	(91)	0.004	0.04	0.09	--	--	0.0004	0.0004	0.004	--	0.0009	--	--	0.002	--	--
28	B	52.6 (116)	720	(86)	0.008	0.03	2.4	--	--	--	0.0004	0.02	--	0.01	--	--	0.01	0.0003	--
		SRWL			0.006	0.03	1.4	--	0.0002	0.0004	0.002	0.03	--	0.005	--	--	0.006	0.0003	--
23	C	66.7 (147)	340	(41)	--	0.0005	--	--	--	--	--	0.0001	--	--	--	--	--	--	--
29	D	9.75 (21.5)	--	--	--	--	--	--	--	--	--	--	--	--	--	--	--	--	--
28	D	16.8 (37)	15,700	(1,890)	--	--	--	--	--	--	--	--	--	--	--	--	--	--	--
25	D	195 (430)	6,870	(825)	--	0.04	1.9	--	--	--	0.005	0.02	0.0007	0.0009	--	--	--	--	--
28	E	(30)	0		0	0	0	0	0	0	0	0	0	0	0	0	0	0	0
27	E	-- --	0		0	0	0	0	0	0	0	0	0	0	0	0	0	0	0
26	E	-- --	0		0	0	0	0	0	0	0	0	0	0	0	0	0	0	0
21	E	-- --	0		0	0	0	0	0	0	0	0	0	0	0	0	0	0	0
28	F	-- --	0		0	0	0	0	0	0	0	0	0	0	0	0	0	0	0
22	F	13.4 (29.6)	0		0	0	0	0	0	0	0	0	0	0	0	0	0	0	0

[1] kg/kkg production is equivalent to lbs/1,000 lbs production

DRAFT

Table VD-6

Representative Raw Waste Loads

Adhesive and Sealants Industry

Subcategory	Flow	BOD_5		COD		TOC		TSS	
	L/kkg (gal/1,000 lbs)	kg/kkg[1]	mg/L[2]	kg/kkg[1]	mg/L[2]	kg/kkg[1]	mg/L[2]	kg/kkg[1]	mg/L[2]
A	250,000 (30,000)	942	3,770	2,520	10,100	669	2,680	1,140	4,560
B	940 (113)	3.4	3,610	15.5	16,500	5.0	5,310	3.1	3,300
C	340 (41)	4.4	12,900	7.3	21,500	1.4	4,100	0.01	29
D	-	-	No discharge of process wastewater pollutants						
E	-	-	No discharge of process wastewater pollutants						
F	-	-	No discharge of process wastewater pollutants						

[1] kg/kkg Production is equivalent to lbs/1,000 lbs Production

[2] Concentrations are based on flow RWL

DRAFT

Table VD-7

Raw Waste Load Variability - Adhesive and Sealants
Subcategory B

Parameter	Flow (gal/1000 lb product)	Raw Waste Load (lb/1000 lb product)				
		BOD_5	COD	TSS	TOC	NH_3-N
Range	86 - 161	2.8 - 4.3	12.0 - 22.3	2.9 - 3.3	4 - 5.8	0.005 - 0.02
Mean Deviation	31.6	0.6	4.5	0.2	0.6	0.005
Standard Deviation	41.3	0.8	5.8	0.7	0.9	0.008

DRAFT

E. Explosives Industry

The wastewater sources associated with each subcategory and ranges for values of select water quality parameters are presented in the following discussion.

Subcategory A1 - Manufacture of Explosives

The following tabulation summarizes the effluent waste load ranges for subcategory A_1.

Parameter	Range (lbs/1,000 lbs product)
BOD_5	0.18 - 6.35
COD	0.30 - 10.6
Nitrates	0.31 - 9.00
Sulfates	0.28 - 116.
TOC	0.24 - 4.13

The wastes from this subcategory are characteristically high in BOD_5, COD, nitrates, sulfates, and TOC.

Highly variable pH is also characteristic of the wastewater from explosives manufacture.

The manufacture of explosives generally involves the nitrification of organic compounds. Many of the explosives use nitric acid to serve as the nitrate source and sulfuric and acetic acids as dehydrating compounds. Nitrification is followed by product finishing, including washing, refinement and drying. The major waste loads generally come from the finishing area, where the crude explosive becomes the final product.

The raw materials used in the manufacture of explosives explain some of the wastewater characteristics. The BOD_5, COD and TOC loads can be attributed to the organic compounds involved. The high nitrate levels can be attributed to acid and organic compounds that contain nitrogen. The sulfate level can be attributed to sulfuric acid, and, in the case of TNT, the sellite wash used in the purification of TNT.

Initially the wastewaters from explosives manufacture are highly acidic, and pH values of 1.0 are not uncommon. However, prior to discharge, neutralization is practiced and, hence, the pH can be as high as 9.0 at discharge. This explains the extreme values of pH.

Another wastewater problem is the discharge of trace quantities of explosives. Discharges of nitroglycerine as high as 1,000 mg/L are not uncommon. TNT is of particular interest since it has been proven to inhibit natural biological processes (G-12,21). Discharges of wastewater containing 100 mg/L of TNT are typical. Concentration of RDX and HMX can be as high as 25 mg/L.

Subcategory A_2 - Manufactive of Propellants

The waste loads associated with the manufacture of propellants are generally higher than those associated with the manufacture of explosives. The following tabulation summarizes the effluent waste load ranges for subcategory A_2:

Parameter	Range (lbs/1,000 lb product)
BOD_5	63.4
COD	35.41 - 118
Nitrates	0.237 - 66.5
Sulfates	53.5 - 328
TOC	28.8 - 43.6

Suspended solids are a troublesome problem, specifically in the manufacture of nitrocellulose, where NC fines can produce levels of TSS concentration from 1,000 to 10,000 mg/L. Wide variation in pH is also a problem.

High BOD_5, COD and TOC levels can be attributed to the organic compounds and solvents (alcohol and ether) involved in the processes. High nitrate levels can be attributed to the use of nitric acids and oraganic compounds with nitrogen as one of the elements. Similarly, sulfate levels can be attributed to the use of sulfuric acid.

Subcategory B - Load and Pack Plants

Waste loads from subcategory B are the mildest, but most variable, in the Explosives industry. The following tabulation summarizes the range of effluent waste loads for this subcategory:

Parameter	Range (lb/1,000 lbs product)
BOD_5	0 - .01
COD	0.0015 - 1.44
Nitrates	.0003 - .053
Sulfates	0.0015 - 1.22
TOC	0.0025 - 4.3

Waste loads in this subcategory could be almost completely eliminated by the use of dry cleanup procedures.

Subcategory C - Specialty Plants

The waste loads associated with the manufacture of initiators and other specialty explosives are the highest of any subcategory of the Explosives industry. The following tabulation summarizes the effluent waste load ranges for subcategory C.

Parameter	Range (lbs/1,000 lbs Production)
BOD	378 - 2,210
COD	1,040 - 17,100
Nitrates	.015 - 5,750
Sulfates	.006 - 7,180
TOC	10.1 - 1,520

High TKN waste loads were also observed.

Very little can be said to explain why waste loads are so much higher in this subcategory. The cause may have something to do with the total quantity of specialty products manufactured. In general, specialty products are sensitive high explosives, used to detonate the more massive but less sensitive explosives. Therefore, the quantity produced is small when compared with the more widely-used explosives of subcategory A. Because of the small quantity, batch processes are used, recovery of spent materials is not attempted, and a total lack of treatment prevails. For example, it was observed in the field that a discharge with a pH of 12.1 occurred daily.

General

Table VE-1 depicts the raw waste loads (RWL) for the Explosives industry. Tables VE-2 and VE-3 present raw waste load data by plant. As this table indicates, there are seven parameters whose raw waste loads are significant: BOD_5, COD, TOC, TSS, NO_3-N, TKN and SO_4.

The statistical methods used to analyze these data involved calculation of the mean. The mean is very sensitive to the presence or absence of the extremes in the distribution. This is even more pronounced when dealing with a small sample. In a severely skewed distribution, the very high or very low scores can exert a considerable impact on the mean, to the extent that it is no longer a good measure of central tendency. Hence, the statistical technique of discarding the largest and smallest value was used in determining the raw waste load for each subcategory if there were five or more pieces

Table VE-1

Raw Waste Loads
Explosives Industry

Subcategory	Products	Flow/Production L/kkg	Flow/Production gal/1,000 pounds	Raw Waste Loads (kg/kkg Product)[1] BOD	COD	TKN	Nitrates	Sulfates	TOC	TSS
A. Explosives Manufacture 1. Explosives	Dynamites, NG, NH_4NO_3, TNT, RDX, HNX	1190	143	1.46	3.87		2.50	6.90	1.63	0.82
2. Propellants	NC, Single, Double, Triple Base Propellants, High Energy Propellants Rolled Powders	217,000	26,000	63.4	81.5	5.98	38.41	191	43.6	64.5
B. Load and Pack	Primers, Fuses, Shells, Blasting Caps, NCN, Water gels, Slurries, ANFO	1,330	160	0.0039	0.092	0.02	0.015	0.409	0.012	0.92
C. Specialty Area	Manufacture of Initiators such as Primer Explosives, Lead Azide, HNM, LMR, PETN, Lead Styphinate, Mercury Fulmenate	170,000	20,900	1260	6550	6.05	5.50	932	992	9.78

[1] Equivalent to lb/1000 lbs Product

DRAFT

Table VI-2

Explosive Industry
Raw Waste Loads

Plant No.	Production kkg/day (1,000 lb/day)	Flow kkL/day (mgd)	Flow L/kkg product (gal/1,000 prod)	Raw Waste Load (kg/kkg Prod.)[1] BOD_5	COD	TSS	TOC	NO_3-N	SO_4	TKN
Subcategory A1 - Explosive Manufacture										
49	59.4 (131)	0.188 (0.05)	3,190 (382)	0.311	0.921	0.152	0.550	3.35	6.55	0.10
50	145 (320)	0.024 (0.0063)	165 (19.7)	0.181		0.054	0.24	1.11	0.3	0.60
43[7]	128 (283)	0.62 (0.163)	4,800 (576)	--	--	0.062	0.27	0.31	10.4	0.021
41[7]	45.8 (101)	5.68 (1.50)	124,000 (14,900)	--	--	10.7	4.13	--	116	0.770
44[7]	296 (652)	28.4 (7.50)	95,800 (11,500)	6.04	10.6	1.02	4.05	35	--	0.34
01[1]	(2)	(2)	(2)	6.35	10.3	0.90	--	9.0	0.28	5.25
03[1]	(2)	(2)	(2)	0.22	3.23	0.550	--	4.83	1.05	--
04[1]	(2)	(2)	(2)	1.66	6.99	2.55	--	3.60	26.4	1.0
06[1]	(2)	(2)	(2)	0.360	1.19	0.53	--	3.34	3.416	2.38
07[1]	(2)	(2)	(2)	0.085	.300	0.780	--	.92	3.15	0.060
Raw Waste Load[2]	50.7 (112)	0.061[7]	1,190	1.46[3]	3.87[3]	0.82[3]	1.63[3]	2.50[3]	6.90[3]	0.82[3]
Subcategory A2 - Propellant Manufacture										
42	13.1 (28.9)	1.37 (.363)	105,000 (12,600)	63.4	118	24.6	43.6	.236	53.5	13.8
43[7]	22.0 (48.6)	8.29 (2.19)	376,000 (45,100)	--	--	83.5	--	48.4	--	3.51
48	30.3 (66.9)	6.74 (1.78)	22,200 (2,660)	--	35.4	25.7	--	66.5	--	--
42[7]	72.9 (161.0)	26.8 (7.07)	366,000 (43,900)	--	91.0	124.	28.8	--	328	687
Raw Waste Load	34.6 (76.3)	10.8 (2.85)	217,000 (26,000)	63.4	118[8]	64.5	43.6[8]	38.4	191	5.98
Subcategory B - Load & Pack Plants										
50	44.2 (97.5)	.0004 (.0001)	8.58 (1.03)	.010	.073	.005	.0270	--	--	0.00
01[1]	(2)	(2)	(2)	.000	.0015	--	--	.025	--	--
02[1]	(2)	(2)	(2)	.0015	.0180	.0470	--	.0010	--	.078
03[1]	(2)	(2)	(2)	--	1.44	5.12	--	.034	--	.079
43[4]	22.1 (48.6)	.037 (.0097)	1,660 (199)	--	.015	.0176	.0065	.00045	--	.0038
48	30.3 (66.9)	.882 (.233)	29,000 (3,480)	--	.0364	.37	--	.053	1.27	--
41[7]	45.8 (101)	.023 (.0052)	509 (61.1)	--	--	.0003	.003	--	--	0010
	.63 (1.4)	.0057 (.0015)	8,920 (1,070)	--	--	6.25	4.30	--	0045	--
43[5]	128 (283)	.027 (.0071)	209 (25.1)	--	.0015	001	.0025	0003	.0015	0001
Raw Waste Load[2]	19.2[3] (42.4)	.026[3] (.0068)	1,330[3] (160)	.0039	.092[3]	.92[3]	.012[3]	0.015[3]	0.409[3]	.021[3]
Subcategory C - Specialty Manufacture										
A	.119 (.263)	.0026 (.0007)	22,200 (2,660)	--	--	--		5.67	8.36	590
45	.143 (.315)	.0042 (.0011)	29,100 (3,490	378	1,040	1,770	521	.015	15.9	14.2
50	.041 (.090)	.019 (.005)	464,000 (55,600)	1,020	17,100	0.464	1,520	.241	7,180	1 48
50	.0011 (.0025)	.0019 (.0005)	1,670,000 (200,000)	1,430	2,090	10.0	934	5,750	--	8.85
50 & DIAZO	.023 (.051)	.011 (.003)	1,330,000 (159,000)	2,210	5,960	1.96	1,520	--	--	461
B[7]	.636 (1,400)	.0174 (.0046)	27,400 (3,290)	--	--	17.4	10.1	--	0.006	--
A[7]	.150 (.330)	.0026 (.0007)	17,700 (2,120)	--	--	--	--	10.59	2,770	0.53
Raw Waste Load	.052 (.115[2])	.0091[6] (.0024[6])	174,000[6] (20,900[6])	1,260	6,550	9.78[3]	992[3]	5.50[3]	932[3]	6.05[3]

[1] Data from Patterson (1974).
[2] Due to coding ambiguities, this individual information was unavailable, however, the average of these numbers was available and used in computing the over-all average.
[3] Excludes high and low values
[4] Propellant operation
[5] Explosive operation
[6] Four-plant average
[7] Average from plants 49, 50 only (49, 50 the only ones visited in this category).
[8] RWL developed from more reliable single source - 47.

Table VE-3

Raw Waste Loads

Plant No.	Raw Waste Load (lbs/ton Product) TDS	Alkalinity	NH_3-N	T-P	Oil	Na
Subcategory A_1 - Explosive Manufacture						
48	19.5	25.4	.133			
50	31.8	6.36	.147			
43	39.4	1.85				
Joliet	616	49.2				
44	41.3	13.4				
Patterson's Study						
(01)	13.0	--	10.4	--	--	--
(02)	--	--	--	--	--	--
(03)	98.5		5.27	--	0.00	--
(04)	96.8		2.06	--	1.09	--
(06)	47.0	--	5.28	--	.09	--
(07)	43.9	--	1.54			
Raw Waste Load	116	19.2	3.55	--	.72	4.71
Subcategory A_2 - Propellant Manufacture						
47	502	63.9	2.75	1.10	2.75	154
43	10,200	--	2.09	.169	--	--
Sunflower	--	--	--	--	--	--
42	2,890	--	--	.92	--	--
Raw Waste Load	4,520	63.9	2.42	.730	2.75	154
Subcategory B - (Lap - Load & Pack)						
Patterson's Study						
(01)	--	--	.007	--	--	--
(02)	.125		--	--	--	--
(03)	11.9		.129	--	--	--
43 (Propellant)	.263		--	--	--	--
Sunflower	14.2	5.38	--	--	--	--
Joliet	.54	.168	--	--	--	--
Twin Cities	143	83.4	--	--	--	3.19
43 (TNT)	.035	.014	--	--	--	--
50	.028	--	--	--	.0216	--
Raw Waste Load	13.5	13.2	.068	--	0.000	1.8
Subcategory C (Specialty Area Initiator)						
Lake City	--	118	--	.057	--	--
45	17,800	18,800	16	31.7	635	17,300
50						
NHN & 150	19,000	--	1.02	.093	748	8,020
LHR	78,400	440	14	.334	2,910	15,700
PETN & DIAZO	24,600	12,300	26.2	--	5,080	
Twin Cities	1,390	668	--	--	--	494
Lake Cities	--	390	--	.30	--	--

of data to work with. If there were fewer than five pieces of data, a simple mean was determined, and none of the data were discarded.

A significant waste characteristic not represented in Table VE-1 is metals. Information available on heavy metals was not adequate to promulgate effluent limitations; however, they appear significant only in subcategory C. Lead from the production of lead azide and lead styphinate can be found in significant quantities. Quantities of approximately two pounds of lead a day (200 mg/L) were observed being discharged daily at one installation.

Another significant waste characteristic not represented in Table VE-1 is trace quantities of explosives. The following concentrations of explosives have been reported:

Explosives	Effluent Concentration
NG	1,800 mg/L (E-18)
TNT	70-350 mg/L (E-7)
RDX	7.9 mg/L (E-9)
HMX	2.6 mg/L (E-9)

In addition to these manufactured explosives in the effluent, there are significant concentrations of unwanted isomers such as DNT (dinitrotoluene) in the wastewater. The possibility of these small concentrations accumulating in the environment and the toxicity of these wastes necessitates adequate treatment prior to discharge (E-12).

Ranges of Concentration

A key waste characterization is the range of concentration for significant pollutant parameters. Average concentrations are presented in Table VE-4. These concentrations can be very misleading, since non-contact cooling waters cannot be distinguished from process waters in every case. To help visualize the ranges observed in the field, the raw waste load data for each subcategory has been plotted as pollutant raw waste load versus contact process wastewater flow load in Figures VE-1 through VE-4. This type of plot is a convenient device for illustrating the strength of the wastewaters generated by industries in each of the subcategories. Since both the loading (ordinate) and flow (abscissa) are expressed on a production basis, dividing the loading by the flow gives a slope which is equivalent to concentration. For orientation, reference lines of constant concentration have been drawn diagonally across each of the plots. Relating specific data points to one of these line provides a convenient estimate of the raw waste concentrations.

Table VE-4

Concentration of Pollutants

Explosives Industry

Category	BOD mg/L	COD mg/L	TKN mg/L	Nitrates mg/L	SO_4 mg/L	TOC mg/L	TSS mg/L
A1	871	2,310	489	1,490	4,120	972	489
A2	700[1]	1,250[1]	150[2]	13[2]	430[1]	480[2]	270[1]
B	3	70	24	112	307	9	690
C	7,230	37,600	35	32	5,354	5,700	56

[1]Historical Dates Plant No. 47

[2]Survey Dates Plant No. 47

FIGURE VE-1

SUBCATEGORY A1 EXPLOSIVE MANUFACTURE POLLUTANT RWL VS RAW WASTE FLOW

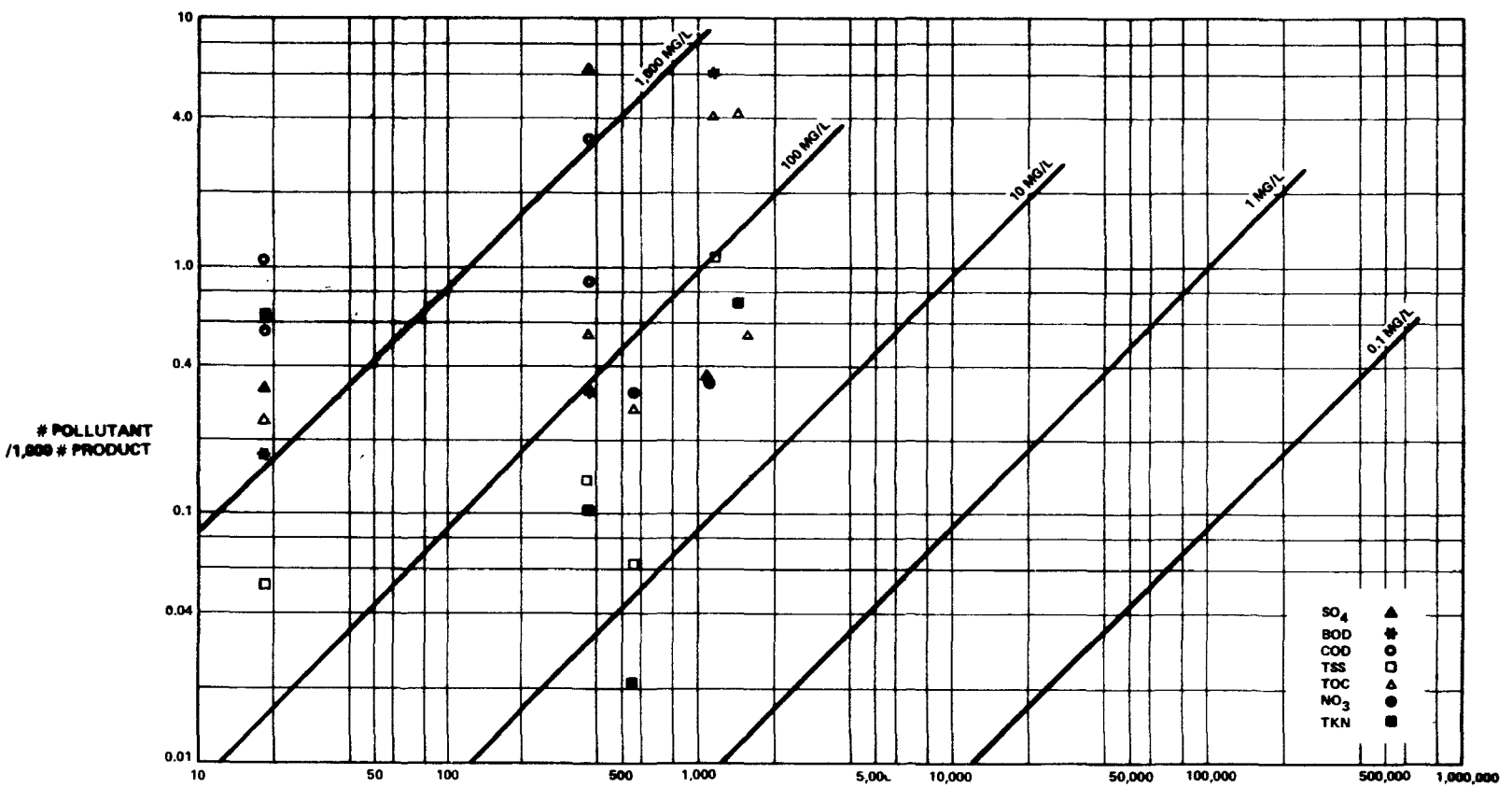

DRAFT

FIGURE VE-2

SUBCATEGORY A2 PROPELLANT MANUFACTURE POLLUTANT RWL VS RAW WASTE FLOW

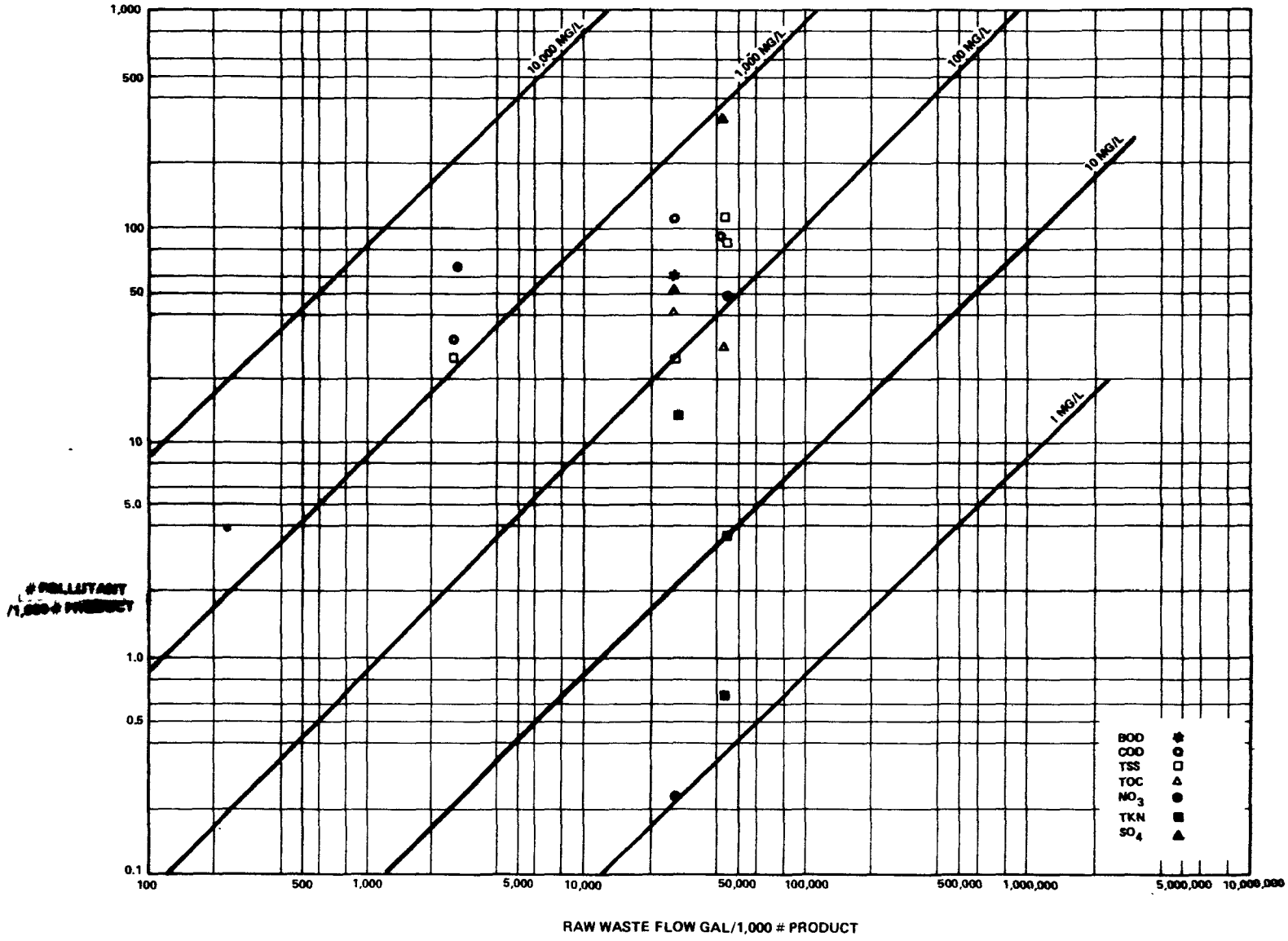

DRAFT

FIGURE VE-3

SUBCATEGORY B LOAD AND PACK: POLLUTANT RWL VS RAW WASTE FLOW

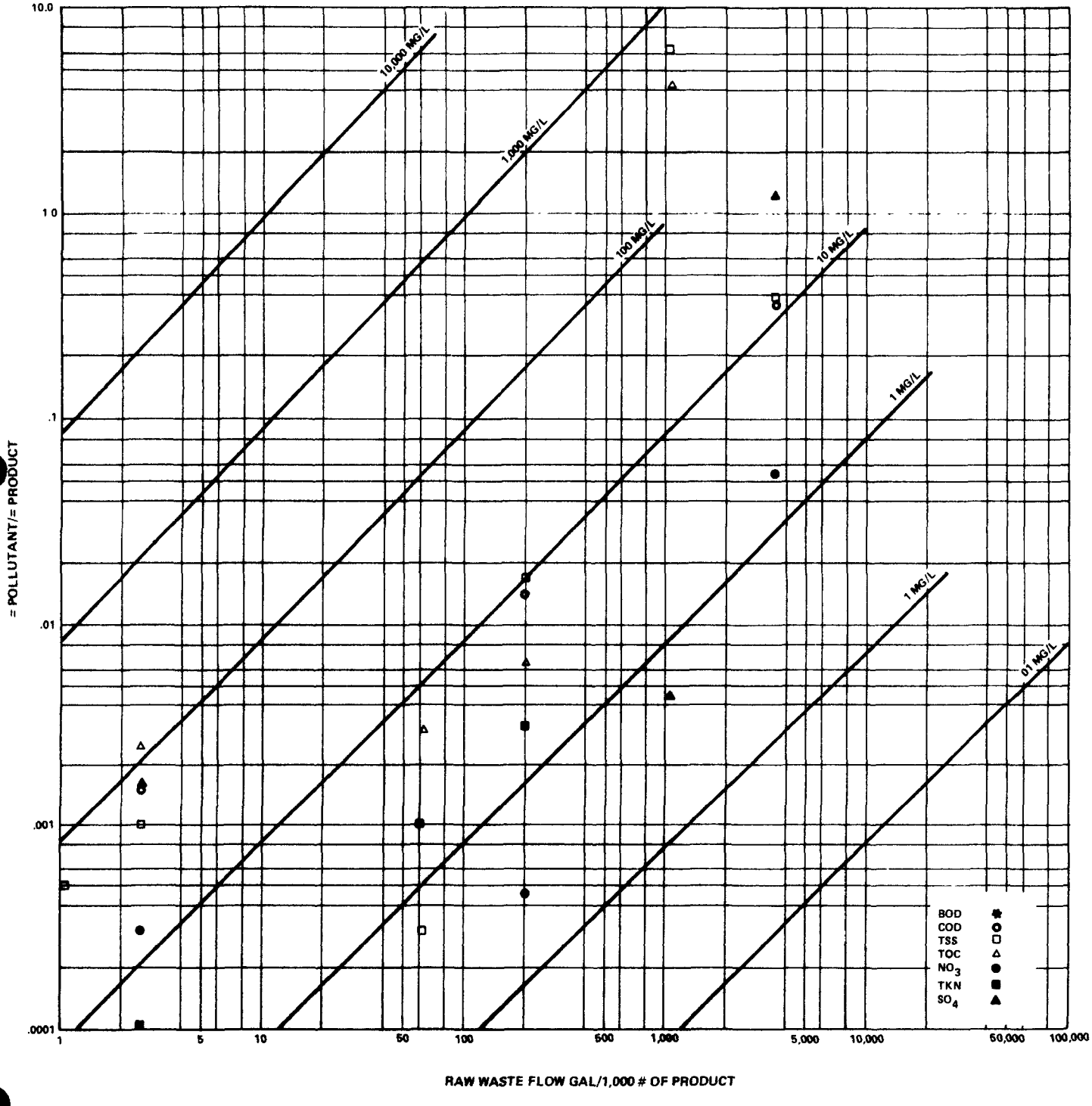

FIGURE VE-4

SUBCATEGORY C SPECIALTY MANUFACTURE· POLLUTANT RWL VS RAW WASTE FLOW

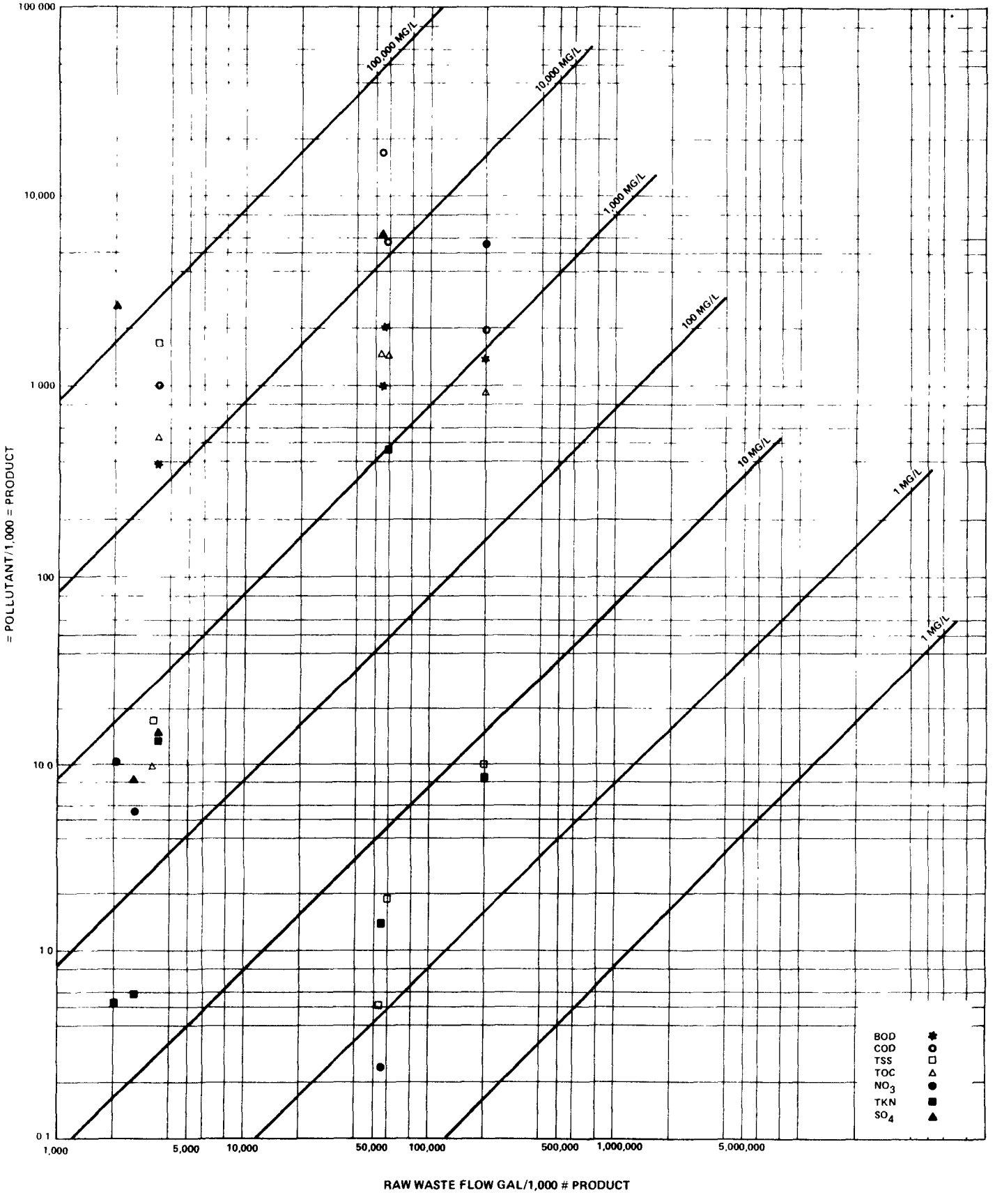

The individual plant RWL data for subcategory A_1 are plotted in Figure VE-1 (explosives) and VE-2 (propellants). The data do not clearly establish any trends between pollutant RWL and flow RWL within the subcategory. Pollutant data points for subcategory A_1 generally fall into the following concentration ranges:

BOD_5 - 20.0 to 1,100 mg/L	NO_3-N - 20.0 to 6,800 mg/L
COD - 60 to 3,500 mg/L	TKN - 5.0 to 3,700 mg/L
TSS - 8.0 to 1,300 mg/L	SO_4 - 50 to 2,100 mg/L
TOC - 12.0 to 1,500 mg/L	

The following pollutant concentration ranges generally characterize subcategory A_1:

BOD_5 - 200 mg/L	NO_3-N - 1.0 to 4,000 mg/L
COD - 200 to 1,200 mg/L	TKN - 1.8 to 60 mg/L
TSS - 100 to 1,000 mg/L	SO_4 - 300 to 900 mg/L
TOC - 30 to 130 mg/L	

Figure VE-3 graphically illustrates the relationships between pollutant and flow RWL's for subcategory B. The pollutant concentration ranges for subcategory B generally fall into the following ranges:

BOD_5 - 1,000 mg/L	NO_3-N - 0.4 to 12 mg/L
COD - 8.0 to 8,500 mg/L	TKN - 2.0 to 6.0 mg/L
TSS - 1 to 700 mg/L	SO_4 - 50 to 85 mg/L
TOC - 5.0 to 550 mg/L	

The plant RWL data for subcategory C are plotted in Figure VE-4. The data indicate an increasing relationship between pollutant RWL and flow RWL within this subcategory. The pollutant data points generally fall into the following concentration ranges:

BOD_5 - 900 to 12,000 mg/L	NO_3-N - 0.5 to 5,000 mg/L
COD - 11,000 to 50,000 mg/L	TKN - 4.0 to 1,000 mg/L
TSS - 1.0 to 60,000 mg/L	SO_4 - 600 to 120,000 mg/L
TOC - 50 to 15,000 mg/L	

Plants in subcategory A_1 appear to use similar amounts of water per 1,000 pounds of product while generating different amounts of wastes per 1,000 pounds of product.

Plants falling in subcategory A_2 show a similar but not so pronounced trend. It is evident that the concentrations for subcategory A_2 appear similar to A_1; however, the amounts of pollutant per 1,000 pounds of product differ greatly. Tables VE-1 and VE-2 provide more detailed data to substantiate this observation.

Plants falling in subcategory B appear to be widely scattered with regard to pollutant concentration. It should be noted that the average flow in this category was about 30,000 gpd, even though the concentrations are still very small.

Wasteloads from plants in subcategory C appear to be variable in concentration. This is borne out by the nature of this category. For example, if a sample extracted when the batch process was being dumped, it would have a high concentration. Also, a plant that discharges a specific process effluent once every three weeks was sampled, and the result was extremely high concentrations of pollutants; however, these periods of high concentration are mitigated by long periods of low concentration.

F. Carbon Black Industry

Unlike the other industries listed under Miscellaneous Chemicals, the Carbon Black industry manufactures only a single major product type. The various production processes for manufacturing carbon black were used as a basis for subcategorization of the industry.

Because the discharges from these processes are intermittent and highly dependent upon the immediate situation, no wastewater sampling was performed for this industry. Available industrial data, however, were acquired for waste categorization for the thermal black process.

The major process wastewater stream for subcategory B (thermal process) is the recirculated dehumidifier stream. The thermal plant visited for this project had no blowdown from this source. The dehumidifier stream was ponded and recirculated as quench water in the process. Data obtained from the plant are presented in Table VF-1.

Table VF-1

Raw Waste Loads
Carbon Black Industry

Process	Flows (L/kkg)	TSS (kg/kkg)
Thermal Black	72,100	8.9

This waste stream is probably representative of a blowdown stream that could be expected from other dehumidifier/quench systems; however, the quantity would be only 1 percent (approximately) of the total flow. The solids concentrations should remain approximately the same.

No definable process waste stream is discharged from subcategory A (furnace black process). This process is a net user of water. Only miscellaneous discharges occur, on an unscheduled basis. Therefore, sampling was not practical.

Carbon black spills are generally vacuumed dry, and are therefore not a source of contamination. Dry vacuuming is used to allow recovery of uncontaminated dry carbon black and prevent wastewater contamination.

G. Photographic Processing Industry

The raw waste loadings (RWL) for the photo-processing industry presented in Table VG-1 were determined from analyses of samples collected during plant visits. These data formed the data base and generally were consistent with existing plant data. The RWL in each case represents an average of four values: one each from two black-and-white film and paper operations and two color film and paper operations. The pollutant loadings from these four operations compared well in order-of-magnitude, and this formed the basis of categorization.

Concentrations of the various parameters were determined from grab samples collected from the combined wastewater overflows and wash waters from each process (C-22, C-41, C-42, Ektaprint 3, etc.). The concentration values for a specific pollutant were found to vary on each of the same machines. Because of this variation in results, direct comparison of the concentrations was not possible.

The constituents of the wastewater for which RWL were determined were those parameters which are frequently present in the wastewater and may have significant ecological consequences once discharged. Other parameters which are considered toxic to municipal treatment plants, such as cadmium, chromium and cyanide, were generally found in trace quantities below the level of analytical detection and are not found in concentrations which would exceed the limits set in the pretreatment guidelines.

Table VG-1
Raw Waste Loads

Photographic Processing Industry

Plant No.	Type of Operation	Raw Waste Load - kg/1,000 sq. in. (lbs./1,000 sq. ft.)													
		BOD_5	COD	TOC	TDS	Silver	TSS	Phenol	Iron	Boron	T-P	Surfactants	TKN	Total Cyanide	Ferrocyanide
32	Black & White	18.4	86.6	11.1	319.8	0.10		1.48×10^{-4}	0.10	7.03	0.13		4.9		
		(3.77)	(17.7)	(2.27)	(65.2)	(0.002)		(3.03×10^{-5})	(0.021)	(1.44)	(0.027)		(1.007)		
33	Black & White	41.6	167.7	48.9	307.1	0.08		0.0097	10.4	0.01	0.36	0.33	46.0		
		(8.5)	(34.3)	(10.0)	(62.8)	(0.016)		(0.0020)	(2.14)	(0.0021)	(0.074)	(0.0679)	(9.42)		
32	Color	45.7	152.6	34.2	158.9	0.06		0.0078	0.85	0.75	0.18	0.07	13.4		
		(9.34)	(31.2)	(7.0)	(32.5)	(0.013)		(0.0016)	(0.174)	(0.154)	(0.036)	(0.0144)	(2.75)		
33	Color	1.46	3.42	1.12	31.5	0.05		0.029	0.25	0.07	0.69		1.19		
		(0.30)	(0.7)	(0.23)	(6.46)	(0.011)		(0.0059)	(0.0509)	(0.0142)	(0.141)		(0.243)		
34	Color	38.1	109.0	39.7	195.6	0.07		0.0088	0.68	0.71	0.89	0.08	3.76		
		(7.8)	(23.3)	(8.12)	(40.0)	(0.015)		(0.0018)	(0.14)	(0.146)	(0.182)	(0.0157)	(0.771)		
Raw Waste Load		36.01	129.0	33.5	245.4	0.07	3.03	0.01	2.46	2.14	0.45	0.16	13.9	0.73	0.58
		(7.36)[1]	(26.4)[1]	(6.85)[1]	(50.2)[1]	(0.014)[2]	(0.622)[5]	(0.0028)[2]	(0.505)	(0.438)[3]	(0.092)	(0.032)	(2.84)	(0.015)[5]	(0.012)[5]
RWL Concentration, mg/L[4]		298	1,069	277	2,032	0.57	25	0.11	20.4	17.8	3.7	1.3	115	6.1	4.9

[1] Plant 33 - Color not included in RWL average

[2] Plant 32 - Black and White not included in RWL average

[3] Plant 33 - Black and White not included in RWL average

[4] Values based on average wastewater flow from the three plants (2,960 gallons per 1,000 sq. ft.) except for TSS, total cyanide, and ferrocyanide

[5] Values based on data obtained from Eastman Kodak's Palo Alto Plant

DRAFT

H. Hospitals

The primary sources of wastewater streams from hospitals include sanitary wastewaters from surgical rooms, laboratories, laundries, X-ray departments, cafeterias, and glassware washing. Wastewaters from hospitals can be characterized as containing BOD_5, COD, and TSS concentrations comparable to normal domestic sewage and amenable to biological treatment.

Specific contaminants which may appear in hospital wastewater include mercury, silver, barium, and boron. Mercury is used primarily in hospital laboratories, but also appears in various forms in medicines, disinfectants, and mildew inhibitors. Silver contamination comes from spent developer solutions discarded by hospital X-ray departments. These developers are used in processing X-ray films. Boron is another contaminant which may appear in X-ray department wastes. This element is found in fixer solutions used in automatic film processing equipment. Barium injections are used for diagnostic purposes, and this metal may appear in a hospital's sanitary wastes.

The characteristics of the wastewater generated by a hospital can be affected by various pollution control practices inside the hospital. Programs to eliminate or reduce the discharge of mercury, solvents, and various strong reagents have been initiated by some hospitals. These wastes are collected in special containers and periodically disposed of by a private contractor. Boron has been eliminated from some hospital wastes by switching to boron-free film developing chemicals. A common practice at many hospitals is the recovery of silver from film developing wastes. This can be accomplished by the use of silver recovery equipment on-site or by collecting the waste and having a contractor periodically pick up the waste for silver recovery.

Five major parameters were considered while analyzing hospital wastewater characteristics:

1. BOD_5 Raw Waste Loading (expressed as lbs BOD_5/1000 occupied beds)
2. COD Raw Waste Loading (expressed as lbs COD/1000 occupied beds)
3. TSS Raw Waste Loading (expressed as lbs TSS/1000 occupied beds)
4. TOC Raw Waste Loading (expressed as lbs TOC/1000 occupied beds)
5. Wastewater Flow Loading (expressed as gals/1000 occupied beds)

The raw waste load (RWL) figures computed for the plants studied are presented in Table VH-1. The raw waste load (RWL) values for hospitals were developed by averaging the RWL values computed for individual hospitals. These RWL values are also shown in Table VH-1. The RWL for all other parameters (except BOD_5, COD, TSS, and TOC) computed from the field survey data and the historical data are presented in Table VH-2.

Table VH-1

Raw Waste Loads - Hospitals

Hospital No.	Number Occupied Beds	Flow KKL/Day (mgd)	Flow L/1000 Beds (gal/1000 Beds)	Raw Waste Load BOD	Raw Waste Load COD	Raw Waste Load TOC	Raw Waste Load TSS
				kg/1,000 Beds (lbs/1,000 Beds)			
				mg/L	mg/L	mg/L	mg/L
91	268	0.560 (0.148)	2,020,000 (533,000)	124 (550)	313 (1460)	96 (425)	69 (306)
92	183	0.174 (0.046)	954,000 (252,000)	321 (674)	785 (1650)	245 (515)	81 (169)
93	835	1.098 (0.290)	1,310,000 (347,000)	224 (646)	596 (1720)	148 (428)	158 (455)
94	577	0.927 (0.245)	1,610,000 (425,000)	223 (789)	-	-	92 (326)
95	1374	0.776 (0.205)	564,000 (149,000)	396 (494)	-	-	199 (248)
96	165	0.265 (0.070)	1,610,000 (424,000)	183 (647)	-	-	170 (647)
97	1054	0.636 (0.168)	602,000 (159,000)	244 (325)	-	-	161 (165)
98	319	0.405 (0.107)	1,270,000 (335,000)	190 (532)	-	-	171 (478)
99	1460	1.525 (0.403)	1,050,000 (276,000)	282 (649)	-	-	234 (538)
100*	681	0.458 (0.121)	670,000 (177,000)	239 (354)	-	-	21 (31)
101*	314	0.409 (0.108)	1,310,000 (345,000)	232 (666)	-	-	194 (556)
102*	398	0.587 (0.155)	1,470,000 (389,000)	220 (715)	-	-	204 (662)
SRWL	-	-	1,210,000 (319,000)	221 (587)	605 (1610)	171 (456)	171 (378)

*Hospitals not visited - values based on average yearly values.

Table VH-2

Hospitals

Raw Waste Loads

	Hospital No. 91	Hospital No. 92	Hospital No. 93	SWRL
Number of Occupied Beds	268	183	835	
Flow - liters/1,000 beds[1] (gallons/1,000 beds[1])	2,020,000 (533,000)	954,000 (252,000)	1,310,000 (347,000)	
Raw Waste Loads				
TDS - kg/1,000 beds[1] (lbs/1,000 beds[1])	1,480 (3,260)	790 (1,740)	540 (1,190)	937 (2,060)
TKN	55.8 (123)	24.7 (54.5)	60.4 (133)	47.0 (103)
NO_3-Nitrogen	0.0 (0.0)	0.37 (0.82)	1.45 (3.2)	0.61 (1.34)
Total Phosphorus	16.1 (35.5)	21.1 (46.6)	6.86 (15.1)	14.7 (32.3)
Oil & Grease	67.6 (149)	73.5 (162)	- (-)	70.6 (155)
Cyanide	0.0 (0.0)	0.0 (0.0)	0.0 (0.0)	0.0 (0.0)
Phenol	3.63 (8.00)	0.12 (0.26)	- (-)	1.88 (4.13)
Iron	2.97 (6.55)	2.49 (5.48)	- (-)	2.73 (6.01)
Lead	0.0 (0.0)	0.0 (0.0)	- (-)	0.0 (0.0)
Mercury	0.018 (0.040)	0.0018 (0.004)	- (-)	0.01 (0.022)
Copper	0.29 (0.64)	0.60 (1.33)	- (-)	0.44 (0.98)
Chromium (Total)	0.17 (0.37)	0.0 (0.0)	- (-)	0.085 (0.19)
Arsenic	0.0 (0.0)	- (-)	- (-)	0.0 (0.0)
Barium	7.62 (16.8)	0.0 (0.0)	- (-)	0.0 (8.39)
Silver	0.59 (1.31)	0.22 (0.48)	0.41 (0.90)	0.41 (0.90)
Boron	0.98 (2.17)	0.48 (1.07)	0.91 (2.0)	0.79 (1.74)
Manganese	- (-)	0.17 (0.38)	- (-)	0.17 (0.38)
Sulfate	- (-)	- (-)	52.2 (115)	52.2 (115)

[1] Occupied Beds

The raw waste loading data are plotted as pollutant raw waste loading versus wastewater flow loading in Figure VH-1. This type of plot is a convenient device for illustrating the quality or strength of the wastewaters generated by hospitals. Since both the loading (ordinate) and flow (abscissa) are expressed on a 1,000-bed basis, dividing the loading by the flow gives a slope which is representative of waste concentration. For orientation, reference lines of constant concentration have been drawn diagonally across each of the plots. Relating a specific data point to one of these lines provides a convenient estimate of raw waste concentrations. This plot indicates that no definite relationships appear to exist between pollutant RWL and flow RWL. Pollutant data points generally fall into the following concentration ranges:

BOD_5	-	100 to 400 mg/L
COD	-	300 to 800 mg/L
TSS	-	60 to 200 mg/L
TOC	-	100 to 300 mg/L

These narrow ranges of concentration indicate that the characteristics of the hospital wastes surveyed were fairly uniform.

The average quantity of wastewater generated per total number of beds was 228 gallons/occupied bed. This compares favorably with the value of 242 gallons/occupied bed reported by the American Hospital Association.

The correlation between BOD_5 and COD, BOD_5 and TOC, and BOD_5 and TSS raw waste loads were checked to see if any apparent relationships existed. A close correlation was observed between BOD_5 and COD, and between and BOD_5 and TOC RWL's. The COD/BOD_5 and BOD/TOC ratios ranged between 2.4 and 2.7, and 1.3 and 1.5 respectively. The correlation between BOD_5 and TSS RWL's were not as close. The BOD_5/TSS ratios observed varied from 1.0 to 2.4.

FIGURE VH-1

POLLUTANT RAW WASTE LOAD
VS
FLOW RAW WASTE LOAD

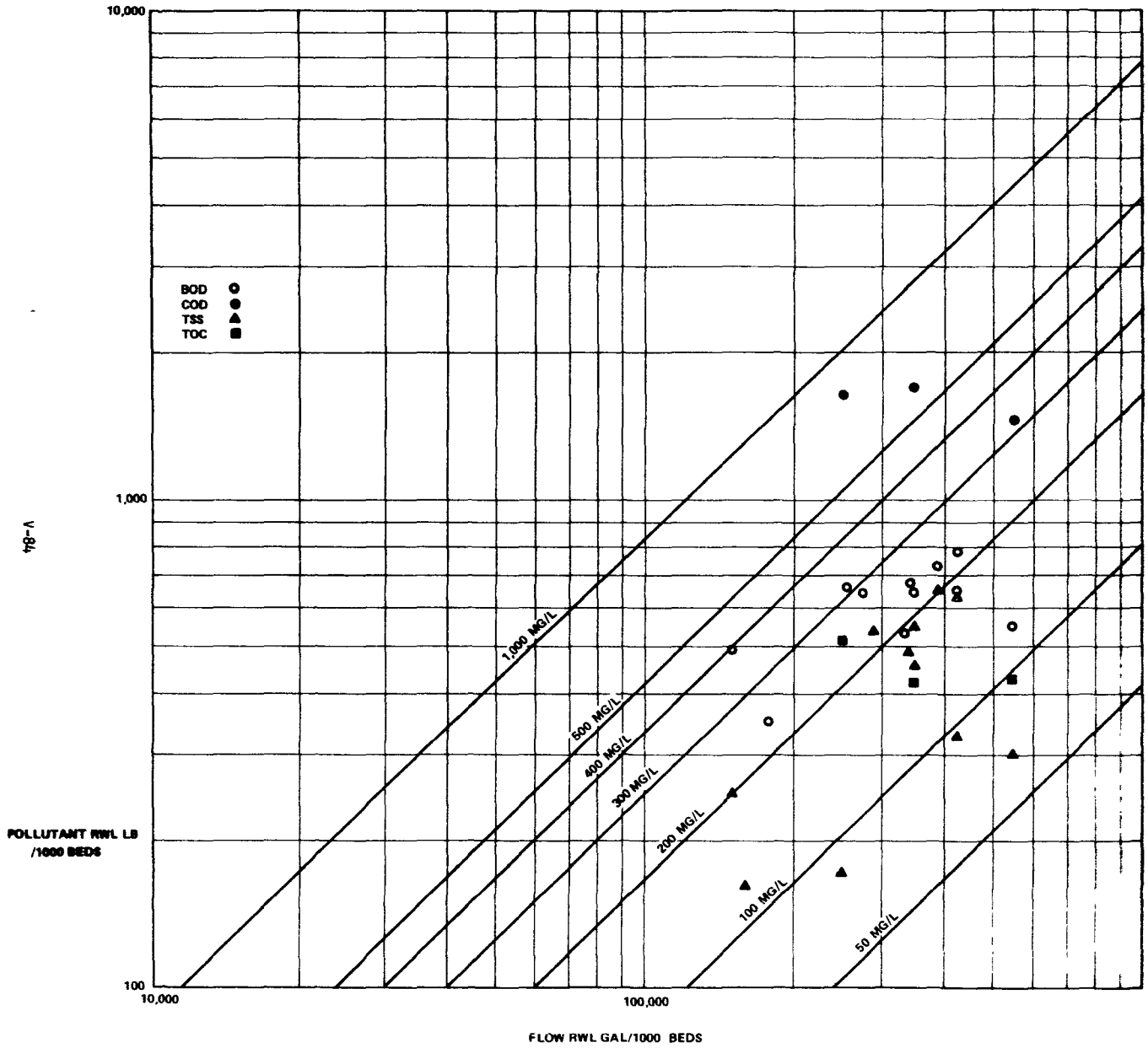

DRAFT

SECTION VI

SELECTION OF POLLUTANT PARAMETERS

General

From review of NPDES permit applications for direct discharge of wastewaters from various industries grouped under Miscellaneous Chemicals and examination of related published data, twelve parameters (listed in Table VI-1) were selected and examined for all industrial wastewaters during the field data collection program. In addition, several specific parameters were examined for each individual industry. All field sampling data are summarized in Supplement B.

The degree of impact on the overall environment has been used as a basis for dividing the pollutants into groups as follows:

1. Pollutants of Significance.
2. Pollutants of Limited Significance.
3. Pollutants of Specific Significance.

The rationale and justification for pollutant categorization within the foregoing groupings, as discussed herein, will indicate the basis for selection of the parameters upon which the actual effluent limitations guidelines were postulated for each industrial category. In addition, particular parameters have been discussed in terms of their validity as measures of environmental impact and as sources of analytical insight, in the light of current knowledge.

Pollutants observed from the field data that were present in sufficient concentrations so as to interfere with, the incompatible with, or pass with inadequate treatment through publicly owned treatment works are discussed in Section XII.

Pollutants of Significance

Parameters of pollution significance for the Miscellaneous Chemicals industry are BOD_5, COD, TOC, and TSS.

BOD_5, COD, and TOC have been selected as the pollutants of significance because they are the primary measurements of organic pollution. In the survey of the industrial categories, almost all of the effluent data collected from wastewater treatment facilities were based upon BOD_5, because almost all the treatment facilities were biological processes. If other processes (such as evaporation, incineration, or activated carbon) are utilized, either COD or TOC may be a more appropriate measure of pollution.

TABLE VI-I

Miscellaneous Chemicals Industry

List of Pollutants to be Examined

Biochemical Oxygen Demand

Chemical Oxygen Demand

Total Organic Carbon

Total Dissolved Solids

Total Suspended Solids

Total Kjeldahl Nitrogen

Ammonia Nitrogen

Nitrate Nitrogen

pH

Alkalinity

Acidity

Total Phosphorus

BOD

Biochemical oxygen demand (BOD) is usually defined as the amount of oxygen required by bacteria while stabilizing decomposable organic matter under aerobic conditions. The term "decomposable" may be interpreted as meaning that the organic matter can serve as food for the bacteria and that energy is derived from this oxidation.

The BOD does not in itself cause direct harm to a water system, but it does exert an indirect effect by depressing the oxygen content of the water. Organic effluents exert a BOD during their processes of decomposition which can have a catastrophic effect on the ecosystem by depleting the oxygen supply. Conditions are reached frequently where all of the oxygen is used, and the continuing decay process causes the production of noxious gases, such as hydrogen sulfide and methane. Water with a high BOD indicates the presence of decomposing organic matter and subsequent high bacterial counts that degrade its quality and potential uses.

Dissolved oxygen (DO) is a water quality constituent that in appropriate concentrations, is essential not only to keep organisms living but also to sustain species reproduction, vigor, and the development of populations. Organisms undergo stress at reduced DO concentrations that make them less competitive and less capable of sustaining their species within the aquatic environment. For example, reduced DO concentrations have been shown to interfere with fish population through delayed hatching of eggs, reduced size and vigor of embryos, production of deformities in the young, interference with food digestion, acceleration of blood clotting, decreased tolerance to certain toxicants, reduced food efficiency and growth rate, and reduced maximum sustained swimming speed. Fish food orgnisms are likewise affected adversely in conditions with suppresed DO. Since all aerobic aquatic organisms need a certain amount of oxygen, the consequences of total lack of dissolved oxygen due to a high BOD can kill all inhabitants of the affected area.

If a high BOD is present, the quality of the water is usually visually degraded by the presence of decomposing materials and algae blooms due to the uptake of degraded materials that form the foodstuffs of the algal populations.

The BOD test has been used to gauge the pollutional strength of a wastewater in terms of the oxygen it would demand if discharged into a watercourse. Historically, the BOD test has also been used to evaluate the performance of biological wastewater treatment facilities and to establish effluent limitation values. However, objections to the use of the BOD test have been raised. The major objections are:

1. The standard BOD_5 test takes five days before the results are available, which negates its use as an operational indicator.

2. At the start of the BOD test, a seed culture (microorganisms) is added to the BOD bottle. If the seed culture were not acclimated (i.e., exposed to a similar wastewater in the past), then it may not readily biologically degrade the waste, and a low BOD value will be reported. THis situation is very likely to occur when dealing with complex industrial wastes, for which acclimation is required in most cases. The necessity of using "acclimated bacteria" makes it very time-consuming for reviewing agencies to duplicate industrial BOD values unless great care is taken in seed preparation.

3. The BOD test is sensitive to toxic materials, as are all biological processes. Therefore, if toxic materials are present in particular wastewater, the reported BOD value may very well be erroneous. This situation can be remedied by running a microorganism toxicity test, i.e., subsequently diluting the sample until the BOD value reaches a plateau indicating that the material is at a concentration which no longer inhibits biological oxidation.

However, some of the previously cited weaknesses of the BOD test also make it uniquely applicable. It is the only parameter now available which measures the amount of oxygen utilized by microorganisms in metabolizing organics (wastewater). The use of COD or TOC to monitor the efficiency of BOD removal in biological treatment is possible only if there is a good correlation between COD or TOC and BOD. Under normal circumstances, two correlations would be necessary, one for the raw wastewater and one for the treated effluent. During the field data analysis, varying correlations between COD or TOC and BOD_5 were evident within each industry and subcategory, and between industry and subcategories. In spite of its disadvantages, the Miscellaneous Chemicals industry should continue to use the BOD_5 parameter as one of its pollutional indicators.

The BOD_5 test is essentially a bioassay procedure involving the measurement of oxygen consumed by living organisms while utilizing the organic matter present in a waste under conditions as similar as possible to those that occur in nature. The problem arises when the test must be standardized to permit its use (for comparative purposes) on different samples, at different times, and in different locations. Once "Standard Conditions" have been defined, as they have for the BOD_5 test, then the original assumption that the analysis simulates natural conditions in the receiving water applies, except only occassionally.

In order to make the test quantitative, the samples must be protected from the air to prevent reaeration as the dissolved oxygen level diminishes. In addition, because of the limited solubility of oxygen in water (about 9 mg/L at 20°C), strong wastes must be diluted to levels of demand consistent with this value to ensure that dissolved oxygen will be present throughout the period of the test.

Since this is a bioassay procedure, it is extremely important that enviornmental conditions be suitable for the living organisms to function in an unhindered manner at all times. This requirement means that toxic substances must be absent and that accessory nutrients needed for microbial growth (such as nitrogen, phosphorus and certain trace elements) must be present. Biological degradation of organic matter under natural conditions is brought about by a diverse group of organisms that carry the oxidation essentially to completion (i.e., almost entirely to carbon dioxide and water). Therefore, it is important that a mixed group of organisms commonly called "seed" be present in the test. For most industrial wastes, this "seed" should be allowed to adapt to the particular waste (acclimate") prior to introduction of the culture into the BOD_5 bottle.

The BOD_5 test may be considered as a wet oxidation procedure in which the living organisms serve as the medium for oxidation of the organic matter to carbon dioxide and water. A quantitative relationship exists between the amount of oxygen required to convert a definite amount of any given organic compound to carbon dioxide and water, which can be represented by a generalized equation. On the basis of this relationship, it is possible to interpret BOD_5 data in terms of organic matter as well as in terms of the amount of oxygen used during its oxidation. This concept is fundamental to an understanding of the rate at which BOD_5 is exerted.

The oxidative reactions involved in the BOD_5 test are the result of biological activity, and the rate at which the reactions proceed is governed to a major extent by population numbers and temperature. Temperature effects are held constant by performing the test at 20°C, which is more or less a median value for natural bodies of water.

The predominant organisms responsible for the stabilization of most organic matter in natural waters are native to the soil. The rate of their metabolic processes at 20°C and under the conditions of the test (total darkness, quiescence, etc) is such that time must be reckoned in days. Theoretically, an infinite time is required for complete biological oxidation of organic matter, but for all practical purposes the reaction may be considered to be complete in 20 days. A BOD test conducted over the 20 day period is normally considered a good estimate of the "ultimate BOD." However, a 20-day period is too long

to wait for results in most instances. It has been found by experience with domestic sewage that a reasonably large percentage of the total BOD is exerted in five days. Consequently, the test has been developed on the basis of a 5-day incubation period. It should be remembered, therefore, that 5-day BOD values represent only a portion of the total BOD. The exact percentage depends on the character of the "seed" and the nature of the organic matter, and can be determined only by experiment.

COD

The Chemical Oxygend Demand (COD) test represents an alternative to the BOD test, and in many respects it is superior to the BOD test. COD is widely used and allows measurement of a waste in terms of the total quantity of oxygen required for oxidation to carbon dioxide and water under severe chemical and physical conditions. It is based on the fact that all organic compounds, with a few exceptions, can be oxidized by the action of strong oxidizing agents under acid conditions. Although amino nitrogen will be converted to ammonia nitrogen, organic nitrogen in higher oxidation states will be converted to nitrates; that is, it will be oxidized.

During the COD test, organic matter is converted to carbon dioxide and water regardless of the biological assimilability of the substances; for instance, glucose and lignin are both oxidized completely. As a result, COD values are greater than BOD values and may be much greater when significant amounts of biologically-resistant organic matter is present.

One drawback of the COD test is that its results give no indication of the rate at which the biologically active material would be stabilized under conditions that exist in nature. Another drawback is analogous to a problem also encountered with the BOD test, that is, high levels of chloride interfere with the analysis. Normally, 0.4 grams of mercuric sulfate are added to each sample being analyzed for chemical oxygen demand. This eliminates the chloride interference in the sample up to a chloride level of 40 mg/L. At concentrations above this level, further mercuric sulfate must be added.

The major advantage of the COD test is the short time required for evaluation. The determination can be made in about 3 hours rather than the 5 days required for the measurement of BOD. Furthermore, the COD test requires less sophisticated equipment, smaller working area, and less investment in laboratory facilities, and does not require as high a degree of training as does the BOD test. Another major advantage of the COD test is that there is no seed acclimation problem. With the

BOD test, the seed used to inoculate the culture should have been acclimated for a period of several days, using carefully prescribed procedures, to assure that the normal lag time (exhibited by all micro-organisms when subjected to a new substrate) can be minimized. No acclimation, of course, is required in the COD test.

TOC

Total organic carbon (TOC) is a measure of the amount of carbon in the organic material in a wastewater sample. The TOC analyzer withdraws a samll volume of sample and thermally oxidizes it at 150°C. The water vapor and carbon dioxide from the combustion chamber (where the water vapor is removed) are condensed and sent to an infrared analyzer, where the carbon dioxide is monitored. This carbon dioxide value corresponds to the total inorganic value. Another portion of the same sample is thermally oxidized at temperatures above 950°C, which converts all the carbonaceous material; this value corresponds to the total carbon value. TOC is determined by subtracting the inorganic carbon (carbonates and water vapor) from the total carbon value.

TSS

Total suspended solids discharged in the biological treatment system efflent consist of biological solids and other suspended solids carried over through the treatment facilities. Total suspended solids, when discharged to a watercourse, settle to the bottom and can blanket spawning grounds and interfere with fish propagation. In addition, the solids which are organic will be metabolized and exert an oxygen demand (which can be appreciable) on the body of water. Total suspended solids, in large concentrations, can impede light transmittance and interfere with aquatic photosynthesis, thereby affecting the oxygen content of a body of water.

TSS RWL's vary significantly within each industry and between industries. The problem is compounded because much of the TSS eventually discharged to surface waters are biological solids which have been produced in the end-of-pipe biological treatment facilities and only partly removed before discharge. To minimize this problem, the effluent limitations will be based on a concentration value which will be attainable with adequate solids separation facilities.

Pollutants of Limited Significance

The following parameters, which were investigated in particular cases, have significant effects on the applicability of end-of-pipe treatment technologies.

Arsenic

Arsenic is found to a small extent in nature in the elemental form. It occurs mostly in the form of arsenites of metals or as pyrites.

Arsenic is normally present in sea water at concentrations of 2 to 3 mg/L and tends to be accumulated by oysters and other shellfish. Concentrations of 100 mg/kg have been reported in certain shellfish. Arsenic is a cumulative poison with long-term chronic effects on both aquatic organisms and on mammalian species, and a succession of small doses may add up to a final lethal dose. It is moderately toxic to plants and highly toxic to animals especially as AsH_3.

Arsenic trioxide, which also is exceedingly toxic, was studied in concentrations of 1.96 to 40 mg/L and found to be harmful in that range to fish and other aquatic life. Work by the Washington Department of Fisheries on pink salmon has shown that at a level of 5.3 mg/L of As_2O_3 for 8 days was extremely harmful to this species: on mussels, a level of 16 mg/L was lethal in 3 to 16 days.

Severe human poisoning can result from 100 mg/L concentrations, and 130 mg/L has proved fatal. Arsenic can accumulate in the body faster than it is excreted and can build to toxic levels, from small amounts taken periodically through lung and intestinal walls from the air, water and food.

Arsenic is a normal constituent of most soils, with concentrations ranging up to 500 mg/kg. Although very low concentrations of arsenates may actually stimulate plant growth, the presence of excessive soluble arsenic in irrigation waters will reduce the yield of crops, the main effect appearing to be the destruction of chlorophyll in the foliage. Plants grown in water containing one mg/L of arsenic trioxides showed a blackening of the vascular bundles in the leaves. Beans and cucumbers are very sensitive, while turnips, cereals, and grasses are relatively resistant. Old orchard soils in Washington that contained 4 to 12 mg/kg of arsenic trioxide in the topsoil were found to have become unproductive.

Cadmium

Cadmium in drinking water supplies is extremely hazardous to humans, and conventional treatment (as practiced in the United States) does not remove it. Cadmium is cumulative in the liver, kidney, pancreas, and thyroid of humans and other animals. A severe bone and kidney syndrome in Japan has been associated with the ingestion of as little as 600 g/day of cadmium.

Cadmium is an extremely dangerous cumulative toxicant, causing insidious progressive chronic poisoning in mammals, fish, and probably other animals because the metal is not excreted. Cadmium could form organic compounds which might lead to mutagenic or teratogenic effects. Cadmium is known to have marked acute and chronic effects on aquatic organisms also.

Cadmium acts synergistically with other metals. Copper and zinc substantially increase its toxicity. Cadmium is concentrated by marine organisms, particularly molluses, which accumulate cadmium in calcareous tissues and in the viscera. A concentration factor of 1,000 for cadmium in fish muscle has been reported, as have concentration factors of 3,000 in marine plants, and up to 29,600 in certain marine animals. The eggs and larvae of fish are apparently more sensitive than adult fish to poisoning by cadmium, and crustaceans appear to be more sensitive than fish eggs and larvae.

Copper

Copper salts occur in natural surface waters only in trace amounts, up to about 0.05 mg/L; consequently, their presence generally is the result of pollution. This is attributable to the corrosive action of the water on copper and brass tubing, to industrial effluents, and frequently to the use of copper compounds for the control of undesirable plankton organisms.

Copper is not considered to be a cumulative systemic poison for humans, but it can cause symptons of gastroenteritis, with nausea and intestinal irritations, at relatively low dosages. The limiting factor in domestic water supplies is taste. Threshold concentrations for taste have been generally reported in the range of 1.0 to 2.0 mg/L of copper, while 5 to 7.5 makes the water completely unpalatable.

The toxicity of copper to aquatic organisms varies significantly, not only with the species, but also with the physical and chemical characteristics of the water, including temperature, hardness, turbidity, and carbon dioxide content. In hard water, the toxicity of copper salts is reduced by the precipitation of copper carbonate or other insoluble compounds. The sulfates of copper and zinc, and of copper and calcium, are synergistic in their toxic effect on fish.

Copper concentrations less than 1 mg/L have been reported to be toxic (particularly in soft water) to many kinds of fish, crustaceans, molluscs, insects, phytoplankton, and zooplankton. Concentrations of copper, for example, are detrimental to some oysters above 0.1 ppm. Oysters cultured in sea water containing 0.13 to 0.5 ppm of copper deposited the metal in their bodies and became unfit as food.

Chromium

Chromium, in its various valence states, is hazardous to man. It can produce lung tumors when inhaled and induces skin sensitizations. Large doses of chromates have corrosive effects on the intestinal tract and can cause inflammation of the kidneys. Levels of chromate ions that have no effect on man appear to be so low as to prohibit determination to date.

The toxicity of chromium slats toward aquatic life varies widely with the species, temperature, pH, valence of the chromium, and synergistic or antagonistic effects, especially that of hardness. Fish are relatively tolerant of chromium salts, but fish food organisms and other lower forms of aquatic life are extremely sensitive. Chromium also inhibits the growth of algae.

In some agricultural crops, chromium can cause reduced growth or death of the crop. Adverse effects of low concentrations of chromium on corn, tobacco, and sugar beets have been documented.

Cyanide

Cyanides in water derive their toxicity primarily from undissolved hydrogen cyanide (HCN) rather than from the cyanide ion (CN^-). HCN dissociates in water into H^+ and CN^- in a pH-dependent reaction. At a pH of 7 or below, less than 1 percent of the cyanide is present as CN^-; at a pH of 8, 6.7 percent; at a pH of 9, 42 percent; and at a pH of 10, 87 percent of the cyanide is dissociated. The toxicity of cyanides is also increased by increases in temperature and reductions in oxygen tensions. A temperature rise of 10^oC produced a two to three-fold increase in the rate of the lethal action of cyanide.

Cyanide has been shown to be poisonous to humans, and amounts over 18 ppm can have adverse effects. A single dose of about 50 to 60 mg is reported to be fatal.

Trout and other aquatic organisms are extremely sensitive to cyanide. Amounts of small as 0.1 ppm can kill them. Certain metals, such as nickel, may complex with cyanide to reduce lethality, especially at higher pH values, but zinc and cadmium cyanide complexes are exceedingly toxic. When fish are poisoned by cyanide, the gills become considerably brighter in color than those of normal fish, owing to the inhibition by cyanide of the oxidase responsible for oxygen transfer from the blood to the tissues.

Dissolved Solids

In natural waters, the dissolved solids are mainly carbonates, chlorides, sulfates, phosphates, and to a lesser extent, nitrates of calcium, magnesium, sodium, and potassium, with traces of iron, manganese and other substances.

Many communities in the United States and in other countries use water supplies containing 2,000 to 4,000 mg/L of dissolved salts, when no better water is available. Such waters are not palatable, may not quench thirst, and may have a laxative action on new users. Waters containing more than 4,000 mg/L of total salts are generally considered unfit for human use, although in hot climates such higher salt concentrations can be tolerated. Waters containing 5,000 mg/L or more are reported to be bitter and act as a bladder and intestinal irritants. It is generally agreed that the salt concentration of good, palatable water should not exceed 500 mg/L.

Limiting concentrations of dissolved solids for fresh-water fish may range from 5,000 to 10,000 mg/L, according to species and prior acclimatization. Some fish are adapted to living in more saline waters, and a few species of fresh-water forms have been found in natural waters with a salt concentration of 15,000 to 20,000 mg/L. Fish can slowly become acclimatized to higher salinities, but fish in waters of low salinity cannot survive sudden exposure to high salinities, such as those resulting from discharges of oil-well brines. Dissolved solids may influence the toxicity of heavy metals and organic compounds to fish and other aquatic life, primarily because of the antagonistic effect of hardness on metals.

Waters with total dissolved solids concentrations higher than 500 mg/L have decreasing utility as irrigation water. At 5,000 mg/L, water has little or no value for irrigation.

Dissolved solids in industrial waters can cause foaming in boilers and can cause interference with cleanliness, color, or taste of many finished products. High concentrations of dissolved solids also tend to accelerate corrosion.

Specific conductance is a measure of the capacity of water to convey an electric current. This property is related to the total concentration of ionized substances in water and to the water temperature. This property is frequently used as a substitute method of quickly estimating the dissolved solids concentration.

Fecal Coliform

Fecal coliforms are used as an indicator since they have originated from the intestinal tract of warm-blooded animals. Their presence in water indicates the potential presence of pathogenic bacteria and viruses.

The presence of coliforms, more specifically fecal coliforms, in water is indicative of fecal pollution. In general, the presence of fecal coliform organisms indicates recent and possibly dangerous fecal contamination. When the fecal coliform count exceeds 2,000 per 100 ml there is a high correlation with increased numbers of both pathogenic viruses and bacteria.

Many microorganisms, pathogenic to humans and animals, may be carried in surface water, particularly that derived from effluent sources which find their way into surface water from municipal and industrial wastes. The diseases associated with bacteria include bacillary and amoebic dysentery, Salmonella gastroenteritis, typhoid and paratyphoid fevers, leptospirosis, cholera, vibriosis, and infectious hepatitis. Recent studies have emphasized the value of fecal coliform density in assessing the occurrence of Salmonella, a common bacterial pathogen in surface water. Field studies involving irrigation water, field crops, and soils indicate that when the fecal coliform density in stream waters exceeded 1,000 per 100 ml, the probability of occurrence of Salmonella was 53.5 percent.

Fluorides

As the most reactive non-metal, fluorine is never found free in nature but as a constituent of fluorite, fluorspar, or calcium fluoride (in sedimentary rocks) and also of cryolite or sodium aluminum fluoride (in igneous rocks). Owing to their origin only in certain types of rocks, and only in a few regions, fluorides in high concentrations are not a common constituent of natural surface waters, but they are not a common constituent of natural surface waters, but they may occur in detrimental concentrations in ground waters.

Fluorides are used as insecticides, for disinfecting brewery apparatus, as a flux in the manufacture of steel, for preserving wood and mucilages, for the manufacture of glass and enamels, in chemical industries, for water treatment, and for other uses.

Fluorides in sufficient quantity are toxic to humans, with doses of 250 to 450 mg giving severe symptoms or causing death.

There are numerous articles describing the effects of fluoride-bearing waters on dental enamel of children; these studies lead to the genralization that water containing less than 0.9 to 1.0 mg/L of fluoride will seldom cause mottled enamel in children, to cause endemic cumulative fluorosis and skeletal effects. Abundant literature is also available describing the advantages in drinking water to aid in the reduction of dental decay, especially among children.

Chronic fluoride poisoning of livestock has been observed in areas where water contained 10 to 15 mg/L fluoride. Concentrations of 30 to 50 mg/L of fluoride in the total ration of dairy cows is considered the upper safe limit. Fluoride from waters apparently does not accumulate in soft tissue to a significant degree, and it is transferred to only a very small extent into the milk and to a somewhat greater degree into eggs. Data for fresh water indicates that fluorides are toxic to fish at concentrations above 1.5 mg/L.

Lead

Some natural waters contain lead in solution, as much as 0.4 to 0.8 mg/L where mountain limestone and galena are found. In the U.S.A., lead concentrations in surface and ground waters used for domestic supplies range from traces to 0.04 mg/L, averaging about 0.01 mg/L.

Foreign to the human body, lead is cumulative poison. It tends to be deposited in bone as a cumulative poison. The intake that can be regarded as safe for everyone cannot be stated definitely, because the sensitivity of individuals to lead differs considerably. Lead poisoning usually results from the cumulative toxic effects of lead after continuous consumption over a long period of time, rather than from occasional small doses. Lead is not among the metals considered essential to the nutrition of animals or human beings.

Lead may enter the body through food, air, and tobacco smoke as well as from water and other beverages. The exact level at which the intake of lead by the human body will exceed the amount excreted has not been established, but it probably lies between 0.3 and 1.0 mg per day. The mean daily intake of lead by adults in North America is about 0.33 mg per day are derived from water used for cooking and drinking.

Lead in an amount of 0.1 mg ingested daily over a period of years has been reported to cause lead poisoning. On the other hand, one reference considered 0.5 mg per day safe for human beings, and a daily dose of 0.16 mg/L over long periods of time have apparently been non-poisonous. The mandatotry limit for lead in the USPHS Drinking Water Standards is 0.05 mg/L. Several countries use 0.1 mg/L as a standard.

Traces of lead in metal-plating baths will affect the smoothness and brightness of deposits. Inorganic lead salts in irrigation water may be toxic to plants and should be investigated further. It is not unusual for cattle to be poisoned by lead in their water: the lead need not necessarily be in solution, but may be in suspension, as, for example, oxycarbonate. Chronic lead poisoning among animals has been caused by 0.18 mg/L of lead in soft water. Most authorities agree that 0.5 mg/L of lead is the maximum safe limit for lead in a potable supply for animals. The toxic concentration of lead for aerobic bacteria is reported to be 1.0 mg/L, and for flagellates and infusoria, 0.5 mg/L. The bacterial decomposition of organic matter is inhibited by 0.1 to 0.5 mg/L of lead.

Studies indicate that in water containing lead salts, a film of coagulated mucus forms, first over the gills, and then over the whole body of the fish, probably as a result of a reaction between lead and an organic constituent of mucus. The death of the fish is caused by suffocation due to this obstructive layer. In soft water, lead may be very toxic: in hard water equivalent concentrations of lead are less toxic. Concentrations of lead as low as 0.1 mg/L have been reported toxic or lethal to fish. Other studies have shown that the toxicity of lead toward rainbow trout increases with a reduction of the dissolved-oxygen concentration of the water.

Manganese

The presence of manganese may interfere with water usage, since manganese stains materials, especially when the pH is raised as in laundering, scouring, or other washing operations. These stains, if not masked by iron, may be dirty brown, gray or black in color, and usually occur in spots and streaks. Waters containing manganous bicarbonate cannot be used in the textile industries, in dyeing, tanning, laundering, or in hosts of other industrial uses. In the pulp and paper industry, waters containing above 0.05 ppm manganese cannot be tolerated except for low-grade products. Very small amounts of manganese -- 0.2 to 0.3 ppm -- may form heavy encrustations in piping, while even smaller amounts may form noticeable black deposits.

Nickel

Elemental nickel seldom occurs in nature, but nickel compounds are found in many ores and minerals. As a pure metal, it is not a problem in water pollution because it is not affected by, or soluble in, water. Many nickel salts, however, are highly soluble in water.

Nickel is extremely toxic to citrus plants. It is found in many soils in California, generally in insoluble form, but excessive acidification of such soil may render it soluble, causing severe injury or death to plants. Many experiments with plants in solution cultures have shown that nickel at 0.5 to 1.0 mg/L is inhibitory to growth.

Nickel salts can kill fish at very low concentrations. Data for the fathead minnow show death occurring in the range of 5 - 43 mg, depending on the alkalinity of the water.

Nickel is present in coastal and open ocean concentrations in the range of 0.1 - 6.0 mg.L, although the most common values are 2 - 3 Marine animals contain up to 400 /L, and marine plants contain up to 3,000 /L. The lethal limit of nickel to some marine fish has been reported as low as 0.8 ppm. Concentrations of 13.1 mg/L have been reported to cause a 50 percent reduction of the photosynthetic activity in the giant kelp (Macrocystis pyrifer) in 96 hours, and a low concentration was found to kill oyster eggs.

Nitrogen

Ammonia nitrogen (NH_3-N) and Total Kjeldahl nitrogen (TKN) are two parameters which have received a substantial amount of interest in the last decade. TKN is the sum of the NH_3-N and organic nitrogen present in the sample. Both NH_3 and TKN are expressed in terms of equivalent nitrogen values in mg/L to facilitate mathematical manipulations of the values.

Organic nitrogen may be converted in the environment to ammonia by saprophytic bacteria under either aerobic or anaerobic conditions. The ammonia nitrogen then becomes the nitrogen and energy source for autotrophic organisms (nitrofiers). The oxidation of ammonia to nitrite and then to nitrate has a stoichiometric oxygen requirement of approximately 4.6 times the concentration of NH_3-N. The nitrification reaction is much slower than the carbonaceous reactions, and, therefore, the dissolved oxygen utilization is observed over a much longer period.

Ammonia is a common product of the decomposition of organic matter. Dead and decaying animals and plants along with human and animal body wastes account for much of the ammonia entering the aquatic ecosystem. Ammonia exists in its non-ionized form only at higher pH levels and is the most toxic in this state. The lower the pH, the more ionized ammonia is formed and its toxicity decreases. Ammonia, in the presence of dissolved oxygen, is converted to nitrate (NO_3) by nitrifying bacteria. Nitrite (NO_2), which is an intermediate product between ammonia and nitrate, sometimes occurs in quantity when depressed oxygen conditions permit. Ammonia can exist in several other chemical combinations, including ammonium chloride and other salts.

Nitrates are considered to be among the poisonous ingredients of mineralized waters, with potassium nitrate being more poisonous than sodium nitrate. Excess nitrates cause irritation of the mucous linings of the gastrointestinal tract and the bladder; the symptoms are diarrhea and diuresis. Drinking one liter of water containing 500 mg/L of nitrate can cause such symptoms.

Infant methemoglobinemia, a disease characterized by certain specific blood changes and cyanosis, may be caused by high nitrate concentrations in the water used for preparing feeding formulae. While it is still impossible to state precise concentration limits, it has been widely recommended that water containing more than 10 mg/L of nitrate nitrogen (NO_3-N) should not be used for infants.

Nitrates are also harmful in fermentation processes and can cause disagreeable tastes in beer. In most natural water the pH range is such that ammonium ions (NH_4+) predominate. In alkaline waters, however, high concentrations of non-ionized ammonia in undissociated ammonium hydroxide increase the toxicity of ammonia solutions.

In streams polluted with sewage, up to one-half of the nitrogen in the sewage may be in the form of free ammonia, and sewage may carry up to 35 mg/L of total nitrogen. It has been shown that at a level of 1.0 mg/L non-ionized ammonia, the ability of hemoglobin to combine with oxygen is impaired and may cause fish to suffocate. Evidence indicates that ammonia exerts a considerable toxic effect on all aquatic life within a range of less than 1.0 to 25 mg/L, depending on the pH and dissolved oxygen level present.

Ammonia can add to the problem of eutrophication by supplying nitrogen through its breakdown products. Some lakes in warmer climates, and others that are aging quickly, are sometimes limited by the nitrogen available. Any increase will speed up the plant growth and decay process.

Oil and Grease

Oil and grease exhibit an oxygen demand. Oil emulsions may adhere to the gills of fish or coat and destroy algae or other plankton. Deposition of oil in the bottom sediments can serve to exhibit normal benthic growths, thus interrupting the aquatic food chain. Soluble and emulsified material ingested by fish may taint the flavor of the fish flesh.

Water-soluble components may exert toxic action on fish. Floating oil may reduce the re-aeration of the water surface and in conjunction with emulsified oil may interfere with photosynthesis.

Water insoluble components damage the coats of water animals and the plumage fowls. Oil and grease in water can result in the formation of objectionable surface slicks preventing the full aesthetic enjoyment of the water. Oil spills can damage the surface of boats and destroy the aesthetic characteristics of beaches and shorelines.

pH, Acidity and Alkalinity

Acidity and alkalinity are reciprocal terms. Acidity is produced by substances that yield hydrogen ions upon hydrolysis, and alkalinity is produced by substances that yield hydroxyl ions. The term "total acidity" and "total alkalinity" are often used to express the buffering capacity of a solution.

Acidity in natural waters is caused by carbon dioxide, mineral acids, weakly dissociated acids, and the salts of strong acids and weak bases. Alkalinity is caused by strong bases and the salts of strong alkalies and weak acids.

The term pH is a logarithmic expression of the concentration of hydrogen ions. At a pH of 7, the hydrogen and hydroxyl ion concentrations are essentially equal and the water is neutral. Lower pH values indicate acidity, while higher values indicate alkalinity. The relationship between pH and acidity or alkalinity is not necessarily linear or direct.

Waters with a pH below 6 are corrosive to waterwork structures, distribution lines, and household plumbing fixtures, and can thus add such constituents to drinking water as iron, copper, zinc, cadmium, and lead.

The hydrogen ion concentration can affect the "taste" of water. At a low pH water tates "sour". As pH increases, the bacterical effect of chlorine is weakened, and it is advantageous to keep the pH close to 7. This is very significant to providing safe drinking water.

Extremes of pH or rapid pH changes can exert stress conditions or kill aquatic life outright. Dead fish, associated algal blooms, and foul stenches are aesthetic liabilities of any waterway. Even moderage changes from "acceptable" criteria limits of pH are deleterious to some species. The relative toxicity to aquatic life of many materials is increased by changes in the water pH. A drop of 1.5 units Metallocyanide complexes can increase a thousandfold in toxicity. The availability of many nutrient substances varies with the alkalinity and acidity. Ammonia is more lethal with a higher pH.

The lacrimal fluid of the human eye has a pH of approximately 7, and a deviation of 0.1 pH unit from the norm may result in eye irritation or severe pain for the swimmer.

Phenols

Phenols and phenolic wastes are derived in the petroleum, coke, and chemical industries; from wood distillation; and from domestic and animal wastes. Many phenolic compounds are more toxic than pure phenol; their toxicity varies with the combinations and general nature of total wastes. The effect of combinations of different phenolic compounds is cumulative.

Phenols and phenolic compounds are both acutely and chronically toxic to fish and other aquatic animals. Also, chlorophenols produce an unpleasant taste in fish flesh, destroying their reactional and commercial value.

It is necessary to limit phenolic compounds in the raw water used for supplying drinking water, as conventional treatment methods used by water supply facilities do not remove phenols. The ingestion of concentrated solutions of phenols will result in severe pain, renal irritation, shock, and possibly death.

Phenols also reduce the utility of water for certain industrial uses, notably food and beverage processing, where it creates unpleasant tastes and odors in the product.

Phenols in wastewater present the following two major problems:

1) At high concentrations, phenol acts as a bactericide.

2) At very low concentrations, when disinfected with chlorine, chlorophenols are formed, producing taste and odor problems.

Past experience has indicated that biological treatment systems may be acclimated to phenol concentrations of 300 mg/L or more (A-18). However, protection of the biological treatment system against slug loads of phenol should be given careful consideration in the design. Slug loadings as low as 50 mg/L could be inhibitory to the biological population, especially if the biological system is not completely mixed.

Phosphorus

During the past 30 years, a formidable case has developed, supporting the belief that increasing standing crops of aquatic plant growths, which often interfere with water uses and are nuisances to man, frequently are caused by increasing the supply of phosphorus. Such phenomena are associated with a condition of accelerated eutrophication or aging of waters. It is generally recognized that phosphorus is not the sole cause of eutrophication, but there is evidence to substantiate that it is frequently the key element in all of the elements required by fresh water plants and is generally present in the least amount relative to need. Therefore, an increase in phosphorus allows the use of other, already present, nutrients for plant growths. For this reason, phosphorus is usually described as a "limiting factor".

When plant life is stimulated and attains a nuisance status, a large number of associated liabilities are immediately apparent. Growths of pond weeds make swimming dangerous. Boating, water skiing, and sometimes, fishing may be eliminated because the mass of vegetation physically impedes such activities. Dense plant populations have been associated with causing stunted fish populations and poor fishing. Plant nuisances emit vile stenches, impart tastes and odors to water supplies, reduce the efficiency of industrial and municipal water treatment, impair aesthetic beauty, reduce or restrict resort trade, lower waterfront property values, cause skin rashes to man during water contact, and serve as a desired substrate and breeding-ground for flies.

Phosphorus in the elemental form is particularly toxic, and subject to bioaccumulation in much the same way as mercury. Colloidal elemental phosphorus will poison marine fish (causing skin tissue breakdown and discoloration). Also, phosphorus is capable of being concentrated and will accumulate in organs and soft tissues. Experiments have found concentrations of phosphorus in marine fish from water containing as little as 1 mg/L.

Radioactivity

Ionizing radiation is recognized as injurious when absorbed in living tissue in quantities substantially above that of natural background levels. It is necessary, therefore, to prevent any living organism -

humans, fishes, and invertebrates - from being exposed to excessive radiation. Beyond the fact that radioactive wastes emit ionizing radiation, they are also similar in many respects to other chemical wastes. Man's senses cannot detect radiation until it is present in massive amounts.

To be a significant factor in the cycling of radionuclides in the aquatic environments, plants and animals must accumulate the radionuclide, retain it, be eaten by another organism, and be digested. However, even if an organism with radionuclide is not eaten before it dies, its radionuclide can enter the "biological cycle" through organisms decomposing the dead organism into elemental components. Plants and animals which become radioactive in this way do, thus, pose a health hazard when eaten by man.

Aquatic life may receive radiation from radionuclides present in the water and substrate, and also from radionuclides that may accumulate with their tissues. Humans can acquire radionuclides through many different pathways. Among the most important are by drinking contaminated water and eating fish and shellfish containing concentrated nuclides. When fish or other fresh or marine products which have accumulated radioactive materials are used as food by humans, the concentrations of the nuclides in the water must be furthe restricted, in order to provide assurance that the total intake of radionuclides from all sources will not exceed the recommended levels.

In order to prevent dangerous radiation exposure to humans, fish, and other important organisms, the concentrations of radionuclides in water, both fresh and marine, must be restricted.

Sulfides

Sulfides are oxidizable, and therefore can exert an oxygen demand on the receiving stream. Their presence in amounts which consume oxygen at a rate exceeding the oxygen uptake of the stream can produce a condition of insufficient dissolved oxygen in the receiving water. Sulfides also impart an unpleasant taste and odor to the water and can render the water unfit for other uses.

Sulfides are constituents of many industrial wastes, such as those from tanneries, paper mills, chemical plants, and gas works. They are also generated in sewage and some natural waters by the anaerobic decomposition or organic matter. When added to water, soluble sulfide salts, such as Na_2S dissociate into sulfide ions, which in turn react with the hydrogen ions in the water to form HS- or H_2S, the proportion of each depending upon the resulting pH value. Thus, when reference is made to sulfides in water, note that the sulfide is probably in the form of HS- or H_2S.

Owing to the unpleasant taste and odor that result when sulfides occur in water, it is unlikely that any person or animal will consume a harmful dose. The threshold of both taste and smell was reported to be 0.2 mg/L of sulfides in pulp mill wastes. For industrial uses, however, even small traces of sulfides are often detrimental. Sulfides in irrigation waters are of little significance.

For fish, the toxicity of solutions of sulfides increases as the pH value is lowered, i.e., the H_2S or HS^-, rather than the sulfide ion, appears to be the principal toxic agent. In a test in water containing 3.2 mg/L of sodium sulfide, trout overturned in two hours at 9 pH, in 10 minutes at 7.8 pH, and in four minutes in 6 pH. Inorganic sulfides have proved fatal to sensitive fishes, such as trout, at concentrations between 0.5 and 1.0 mg/L of sulfide, even in neutral and somewhat alkaline solutions.

Temperature

Temperature is one of the most important and influential water quality characteristics. Temperature determines what species may be present; activates the hatching of young, regulates their activity, and stimulates or suppresses their growth and development; attracts, and may kill when the water becomes too hot or becomes chilled too suddenly. Colder water generally suppresses development. Warmer water generally accelerates activity and may be a primary cause of aquatic plant nuisances when other environmental factors are suitable.

Temperature is a prime regulator or natural processes within the water environment. It governs physiological functions in organisms and, acting directly or indirectly in combination with other water quality constituents, affects aquatic life with each change. These effects include chemical reaction rates, enzymatic functions, molecular movements, and molecular exchanges between membranes within and between the physiological systems and the organs of an animal.

Chemical reaction rates vary with temperature and generally increase as the temperature is increased. The solubility of gases in water varies with temperature. Dissolved oxygen is decreased by the decay or decomposition of dissolved organic substances, and the decay rate increases as the temperature of the water increases, reaching a maximul at about 30°C (86°F). The temperature of stream water, even during summer, is below the optimum for pollution-associated bacteria. Increasing the water temperature increases the bacterial multiplication rate when the environment is favorable and the food supply is abundant.

Reproduction cycles may be changed significantly by increased temperature because this function takes place under restricted temperature ranges.

Spawning may not occur at all when temperatures are too high. Thus, a fish population may exist in a heated area only by continued immigration. Disregarding the decreased reproductive potential, water temperatures need not reach lethal levels to decimate a species. Temperatures that favor competitors, predators, parasites, and disease can destroy a species at levels far below those that are lethal.

Fish food organisms are altered severely when temperatures approach or exceed 90°F. Predominant algal species change; primary production is decreased; and bottom-associated organisms may be depleted or altered drastically in numbers and distribution. Increased water temperature may cause aquatic plant nuisances when other environmental factors are favorable.

Synergistic actions of pollutants are more severe at higher water temperatures. Domestic sewage, refinery wastes, oils, tars, insecticides, detergents, and fertilizers deplete oxygen in water more rapidly at higher temperatures, and the respective toxicities are likewise increased.

When water temperatures increase, the predominant algal species may change from diatoms, to green algae, then at high temperatures blue-green algae finally because of species temperature preferentials. Blue-green algae can cause serious odor problems. The number and distribution of benthic organisms decreases as water temperature increases above 90°F, which is close to the tolerance limit for the water's population. This could seriously affect certain fish that depend on benthic organisms as a food source.

The cost of fish mortalities resulting from their returning to cooler water after being attracted to heated waters in winter may be considerable.

Rising temperatures stimulate the decomposition of sludge, formation of sludge gas, multiplication of saprophytic bacteria and fungi (particularly in the present of organic wastes), and the consumption of oxygen by putrefactive processes, thus affecting the aesthetic value of a water course.

In general, marine water temperatures do not hcange as rapidly or range as widely as those of fresh waters. Marine and estuarine fishes, therefore, are less tolerant of temperature variation. Although this limited tolerance is greater in estuarine than in open water marine species, temperature changes are more important to those fishes in estuaries and bays than to those in open marine areas, because of the nursery and replenishment functions of the estuary that can be adversely affected by extreme temperature changes.

Zinc

Occurring abundantly in rocks and ores, zinc is readily refined into a stable pure metal and is used extensively for galvanizing, in alloys, for electrical purposes, in printing plates, for dye-manufacture and for dyeing processes, and for many other industrial purposes. Zinc salts are used in paint pigments, cosmetics, pharmaceuticals, dyes, insecticides, and other products too numerous to list here. Many of these salts (e.g., zinc chloride and zinc sulfate) are highly soluble in water; hence, it is to be expected that zinc might occur in many industrial wastes. On the other hand, some zinc salts (zinc carbonate, zinc oxide, zinc sulfide) are insoluble in water; and consequently, it is to be expected that some zinc will precipitate and be removed readily in most natural waters.

In zinc-mining areas, zinc has been found in waters in concentrations as high as 50 mg/L. In effluents from metal-plating works and small-arms ammunition plants, it may also occur in significant concentrations. In most surface and ground waters, it is present only in trace amounts. There is some evidence that zinc ions are adsorbed strongly and permanently on silt, resulting in inactivation of the zinc.

Concentrations of zinc in excess of 5 mg/L in raw water used for drinking water supplies cause an undesirable taste which persists through conventional treatment. Zinc can have an adverse effect on man and animals at high concentrations.

In soft water, concentrations of zinc ranging from 0.1 to 1.0 mg/L have been reported to be lethal to fish. Zinc is thought to exert its toxic action by forming insoluble compounds with the mucous that covers the gills, by damage to the gill epithelium, or possibly by acting as an internal poison. The sensitivity of fish to zinc varies with species, age and condition, as well as with the physical and chemical characteristics of the water. Some acclimatization to the presence of zinc is possible. It has also been observed that the effects of zinc poisoning may not become apparent immediately, so that fish moved from zinc-contaminated (after 4 to 6 hours of exposure) to zinc-free water may die 48 hours later. The presence of copper in water may increase the toxicity of zinc to aquatic organisms, but the presence of calcium or hardness may decrease the relative toxicity.

Observed values for the distribution of zinc in ocean waters vary widely. The major concern with zinc compounds in marine waters is not one of acute toxicity, but rather of the long-term sublethal effects of the metallic compounds and complexes. From an acute toxicity point of view, invertebrate marine animals seem to be the most sensitive organisms tested. The growth of the sea urchin, for example, has been retarded by as little as 30 mg/L of zinc. Zinc sulfate has also been found to be lethal to many plants, which could impair its agricultural use.

Total Dissolved Solids

Total dissolved solids consist mainly of carbonates, bicarbonates, chlorides, sulfates, nitrates, and phosphates. Sulfate concentrations of 500 mg/L have been reported to be inhibitory to anaerobic digestion, and NaCl concentrations of 10,000 mg/L are reported to be inhibitory to biological treatment.

Pollutants of Specific Significance

In addition to the parameters already discussed, there are pollutants specific to various individual industry categories of the Miscellaneous Chemicals industry. These will be covered as applicable to the industry discussions.

A. Pharmaceutical Industry

Review of Raw Waste Load (RWL) data indicates that the pollutants of special significance to the Pharmaceutical industry in addition to BOD_5, COD, TOC, TSS and NH_3-N, are: mercury, cyanide, ammonia nitrogen, organic nitrogen, and total phosphorus. The raw waste loads computed for all parameters analyzed in the field are presented in Table VA-4, except for BOD_5, COD, TOC, TSS, and NH_3-N (which are presented in Table VA-1).

Mercury and Cyanide

Numerous synthetic mercuric salts are used by the Pharmaceutical industry to produce medicinal products and disinfectants. Cyanide salts are used by the industry as catalysts in certain chemical synthesis processes (amination). The presence of mercury and/or cyanide in wastewaters from these processes may have toxic effects on the biological unit operations of a wastewater treatment plant, and thus cause it to be ineffective.

Toxicity is classified as either acute or chronic. Acute toxicity is characterized by the rapid onset of negative physiological effects upon exposure, whereas chronic toxicity is usually manifested by the appearance of negative physiological effects after a prolonged dosage of a chemical at concentrations below the acute level. The latter effect is often the result of the accumulation of the toxic compound in the tissues of the organism. One complicating factor in trying to understand toxicity is the synergistic or antagonistic effect of various chemicals. For example, mature fish have been killed by 0.1 mg/L of lead in water containing 1 mg/L of calcium, but have not been harmed by this concentration of lead in water containing 50 mg/L of calcium.

"The U.S. Public Health Service (USPHS) Drinking Water Standards" specify a maximum allowable cyanide concentration of 0.01 mg/L, as CN^-. "U.S. Environmental Protection Agency Preliminary Draft of Interim Primary Drinking Water Standards" proposes a limit of 0.002 mg/L of mercury.

Only minimal concentrations of mercury and cyanide were observed in most of the RWL data. This is attributed to the various in-plant pollutant abatement measures currently practiced in the Pharmaceutical industry (i.e., metals recovery, cyanide destruction). It is emphasized that the end-of-pipe treatment models proposed in this study should be used in conjunction with these in-plant practices. Their expanded use, wherever feasible, and improvement of current in-plant contaminant reduction systems are also encouraged.

Nitrogen

Ammonia nitrogen and organic nitrogen have been previously discussed as "pollutants of limited significance." High concentrations of organic and inorganic nitrogen were observed in the RWL data for the Pharmaceutical industry. As Federal, state, and local effluent discharge standards become more stringent, it is inevitable that maximum allowable discharge limitations will be adopted for the various forms of nitrogen, and that nitrogen removal will become a major requirement of the Pharmaceutical industry. However, the selection of ammonia and organic nitrogen discharge standards shall be related to local conditions.

Phosphorus

Phosphorus compounds are used by some segments of the Pharmaceutical industry. High total phosphorus concentrations were observed in the raw water from subcategories A, C_1, and C_2 plants. Phosphorus is often a limiting nutrient in many water courses; consequently, elevated phosphorus concentrations often lead to algae blooms and steady degradation of impounded waters. The selection of standards for discharge of phosphorus shall be related to local conditions.

B. Gum and Wood Chemicals Industry

Review of RWL data indicates that the pollutants of special significance to Gum and Wood Chemicals industry are: oil, phenol, total dissolved solids, and heavy metals. Tables VB-2 and VB-3 contain RWL data for five of the six subcategories in the Gum and Wood Chemicals industry (excluding the Char and Charcoal Briquet subcategory, which involves no discharge of process wastewater pollutants).

Oil

Oil RWL data for the following subcategories reflect relatively high concentrations for the Gum and Wood Chemicals industry. The following RWL data are summarized from Table VIB-1.

Subcategory	Product	RWL Concentration mg/L
B	Gum Turpentine and Rosin	441
D	Tall Oil, Pitch and Fatty Acids	325
F	Rosin Derivatives	356

The oil RWL consists mainly of oil of vegetable origin and not petroleum-based free oil. Oils of vegetable origin at significant concentrations have been reported as being not inhibitory to biological treatment. However, efficient reduction of TSS (which is necessary for effective biological treatment) would require prior reduction of any oils to low concentrations.

Phenol

The following are phenol RWL's which were found to be of significance in this industry:

Subcategory	Product	RWL Concentration mg/L
D	Tall Oil, Pitch and Fatty Acids	20.5
F	Rosin Derivatives	61.5

Equalization of the wastewater before biological treatment will minimize slug loads and the consequent inhibition of the biological population.

Total Dissolved Solids

Total dissolved solids in Gum and Wood Chemicals wastewaters vary dramatically from one category to another. The following is a summary of TDS, SO_4, and Cl data from Table VIB-1:

Subcategory	Product	RWL Concentration		
		TDS mg/L	SO_4 mg/L	Cl mg/L
B	Gum Turpentine & Rosin	3,640	254	189
F	Rosin Derivatives	7,480	12.9	178

Metals

Metals such as zinc were found in the wastewaters from subcategories B and F. The following zinc RWL data are summarized from Table VIB-1.

Subcategory	Product	Zinc RWL Concentration mg/L
B	Gum Turpentine and Rosin	15.5
F	Rosin Derivatives	6.80

The zinc in subcategory F is attributed to catalyst losses, but no such zinc catalyst is used in subcategory B. Consequently, it would appear that the presence of the zinc in subcategory B indicates a cross contamination between the gum turpentine and rosin derivative production areas within one of the plants surveyed.

C. Pesticides and Agricultural Chemicals Industry

The raw waste loads computed for all parameters analyzed are presented in Tables VIC-1 through VIC-5, except for BOD_5, COD, TOC, oil and grease, and TSS (which are presented in Tables VC-6 through VC-10). Pollutants of special significance, in addition to those above, are:

Subcategory A - Halogenated Organic Pesticides

Of the pollutants examined, oil and grease and phenol are significant parameters for subcategory A process wastewaters. Oil and grease exist in process wastewaters due to organics scrubbed from vapor streams, entrainment in decanted aqueous layers, as well as washdown, run-off, spills and leakage in the process areas. Loadings in the plants visited ranged from less than 0.1 kg/kkg to 43 kg/kkg of final product. Since oil wastes result from intermittent flows, instantaneous values could at times be much higher. The phenol raw waste loads appear minor and since biological treatment will effectively remove phenol, concentrations in the final plant effluent should be minimal.

Subcategory B - Organo-Phosphorus Pesticides

Review of RWL data indicates that the pollutants of special significance to subcategory B are: oil and grease, phenol, cyanide, total-phosphorus, NH_3-N, and TKN. Besides lubricating oils and process separable organics washed into the sewer system during area washdowns, sources of oil and grease common to this category are organics scrubbed from vapor streams. Oil loadings vary from plant to plant, but tend to be low. However, oil wastes are often carried to the sewer system by intermittent flows; accordingly, instantaneous concentrations can be high. As the pesticides in this subcategory are phosphorus-based, the presence of high amounts of total-phosphorus in the process wastewaters is not unexpected. The total nitrogen concentrations in raw process wastewaters were considered significant. Analytical results showed ammonia nitrogen to be the major contributor to the total nitrogen loading. Significant cyanide concentrations were not observed in all subcategory B process wastewaters; however, it was found to be present in significant concentrations in certain individual plants.

Subcategory C - Organo-Nitrogen Pesticides

Significant pollutants for subcategory C wastewaters are: oil and grease, cyanide, and NH_3-N. Oil and grease is present in varying concentrations in process wastewaters. It is attributable to carryover of separable organics into the wastewater system from various process

units. The presence of cyanide (CN) concentrations above 0.02 ppm was observed in the process waters of some of the plants in the subcategory. Although not a problem for the subcategory as a whole, it is significant for specific products, depending on raw materials used and products manufactured. Analyses for nitrogen show that the major portion of the total nitrogen is due to ammonia (NH_3-N).

Subcategory D - Metallo-Organic Pesticides

Of the pollutants examined, oil and grease and heavy metals are the most significant parameters when considering process wastewaters from the metallo-organic pesticides industry. Oil and grease exist in process wastewaters due to organic carryover, and rinse and washdown operations. Limited data are available on composite oil loadings, but actual instantaneous concentrations can be high since most oily wastes result from intermittent flows. Various heavy metals are used in the production of subcategory D pesticides. In most instances, the heavy metal used will show up in the process wastewater and will require control.

Subcategory E - Formulators and Packagers

Of the pollutants examined, significant parameters vary according to the particular category of formulation process. Significant characteristics for water-based formulators include oil and grease, total-phosphorus, TKN, and, in some cases, cyanide and heavy metals. For solvent-based and dry formulators, significant characteristics include total-phosphorus, TKN, and, in some cases, cyanide and heavy metals. Although the available oil and grease data for this sector of the industry is very limited, knowledge of the processing techniques indicates that oil and grease can potentially enter the plant sewer system. Principal sources are cleanout and washdown wastes. Oil loadings tend to be more of a consideration with water-based formulations rather than with the other categories. Although data was limited, total-phosphorus, cyanide, and heavy metal loadings can be significant for certain product formulations.

D. Adhesive and Sealants Industry

Parameters of significance in the Adhesive and Sealants industry are BOD_5, COD, and TSS. Additional pollutants which were found to be of specific significance in this industry were phenol, oil, chromium, and TKN. The raw waste loads computed for all the parameters analyzed have been presented in Tables VD-4 and VD-5 in Section V of this report.

In Subcategory A chromium, TKN, and oil may be present in significant quantities in the wastewaters from the manufacture of animal glue. Phenol may be present in significant quantities in the wastewaters from the manufacture of phenol formaldehyde resins (Subcategory B or C).

The plants visited during the field survey did not generate significant quantities of these pollutants. Nevertheless, the possibility of discharge of large quantities of these materials still exists at certain types of plants.

E. Explosives Industry

General parameters of significance in the Explosives industry are BOD_5, TOC, TSS, TKN, lead, nitrates, and sulfates. Of special significance to the Explosives industry is the problem of trace quantities of the explosive products themselves.

Explosives such as TNT, NG, RDX, and HMX can all be considered significant, because of their potential hazard, toxicity, or inhibitory effect on microorganisms (E-12). NG has been shown to be amenable to biological treatment by some investigators (E-11, E-15), while others have found little success with biological treatment (E-13).

Of particular interest to the industry are the pollutants associated with the manufacture of TNT, the production of which far exceeds any other explosive in the military segment. These include color, sulfates, and saturation levels of TNT. The color problem is manifested in the Red and Pink water previously discussed in Section IV. The sulfate problem is associated with the Red-water condition. Saturation concentration of TNT in the effluent is an obvious problem and must be abated.

The major problem with NC is NC fines, which generally are present in quantities large enough to cause a significant TSS problem.

F. Carbon Black Industry

As discussed in Section V, only subcategory B involves a discharge of process contact wastewater. In this subcategory, the process quench water contacts a hot process stream of carbon black and hydrogen formed by cracking natural gas. The quench water is later condensed in a dehumidifier by further cooling by active sprays. This contact water contains a relatively small amount of carbon black as TSS. Since carbon black consists of elemental carbon (which exerts no oxygen demand), the only pollutant of significance is TSS. TSS is measured by the organic and inorganic solids removed when filtered through a preformed glass filter mat in a Gooch crucible.

The thermal plant that was visited had a TSS concentration of approximately 125 mg/L in the recirculated dehumidifier system, and had no blowdown. Normally, a blowdown is taken from such a closed-loop system. The TSS concentration of the blowdown would probably be similar to the concentration measured in the closed loop that was investigated.

The nature of the solids that are discharged is primarily elemental carbon. Therefore, the solids will exhibit no oxygen demand, either chemical or biochemical, and will have no toxic effect on any organisms within the receiving body, whether it be a stream or a municipal treatment system.

G. Photographic Processing Industry

Review of analytical data indicate that the pollutants of special significance in the Photographic Processing industry are ferrocyanide and silver.

Ferrocyanide

Ferrocyanide concentrations were determined through a visual determination method developed by American National Standards Institute (G-7). This analysis is not a standard method, but the results do serve as a reasonable guide for differentiating between the various forms of cyanide when used in conjunction with the results from the total cyanide determination.

The ferrocyanide ion, $Fe(CN)_6^{-4}$, comes from the bleach used in most color processes, i.e. ferricyanide bleach. Ferrocyanide is one of the most objectionable pollutants resulting from photographic processing. Primarily, the complexed ion is potentially harmful because it is converted to free, highly toxic cyanide in the presence of sun light (G-8). Ferrocyanide concentration was 4.7 mg/L in the effluent from Plant 34. A noteworthy finding at two particular plants was that free cyanide had already evolved from the complexed form when measured in the plant effluents.

Silver

Silver is by far the most prevalent among the heavy metals in photographic wastewaters. Most of the silver enters the wastewater stream from either the fix or bleach-fix bath overflow. At this point, silver is in a soluble complex form as silver thiosulfate, which is innocuous to secondary waste treatment plants and is much less toxic than ionic silver (G-3). As reported in one study, essentially no free silver ion results from photographic processing operations. Silver measured in the effluent from Plant 34 was 0.26 mg/L.

H. Hospitals

The pollutant raw waste loads computed for the Hospitals category are presented in Tables VH-1 and VH-2.

Pollutants of special concern in the hospital category are silver and mercury; these compounds in large enough concentrations will have significant effects on the applicability of end-of-pipe treatment technologies. Other pollutants of concern are barium and boron.

The possibility of discharge of significant quantities of these four materials from hospitals exists. However, the hospitals visited during the sampling period discharged very small quantities of these materials. Through proper handling, reduction of use, and proper disposal and recovery techniques, the discharge of these materials to the wastewater stream can be greatly reduced.

Silver

Silver discharge is associated with the development of x-rays. If the silver level is above the minimum, the silver recovery system should be carefully reviewed. The most efficient method is to collect all effluent from the processors and physically remove the liquid from the hospital. Several service companies are equipped to do this.

There are also in-line recovery units that basically work on the principle of an electro-plating system. Disposal of scrap x-ray film is also closely related to the scrap silver recovery. A definite economic advantage can also be realized in hospitals developing large quantities of x-rays.

Mercury

Hospitals utilize mercury in its elemental form in manometers, thermometers, and some electronic switches; the laboratories are the biggest users of these items in hospitals.

Mercurous and mercuric compounds are used for medicinal purposes in: diuretics, cathartics, and antiseptics; disinfectants for cleaning; amalgams for dental procedures; and in tissue fixatives in laboratories. Some mildew inhibitors containing mercury are used by laundries.

Barium

Many hospitals have been following a procedure of draining the barium with a catheter into a plastic bag, which almost eliminates the barium from the hospital's sewage. However, the possibility exists for accidental discharge of barium into the waste stream.

Boron

Boron can be discharged into the sewer system via the automatic processors in the x-ray department. The fixer has been found to yield the greatest quantity of boron, but the developer also contains significant quantities. In order to minimize the boron discharged into the sewer system, boron-free fixers and developers have been introduced by reformulation of the chemistry to eliminate boron.

SECTION VII

CONTROL AND TREATMENT TECHNOLOGIES

General

The entire spectrum of wastewater control and treatment technology is at the disposal of the Miscellaneous Chemicals industry. The selection of technology options depends on the economics of that technology and the magnitude of the final effluent concentration. Control and treatment technology may be divided into two major groupings: in-plant pollution abatement and end-of-pipe treatment.

After discussing the available performance data for each of the industries covered under Miscellaneous Chemicals, conclusions will be made relative to the reduction of various pollutants commensurate with the following distinct technology levels:

I. Best Practicable Control Technology Currently Available (BPCTCA)

II. Best Available Technology Economically Achievable (BATEA)

III. Best Available Demonstrated Control Technology (BADCT)

To assess the economic impact of these proposed effluent limitation guidelines on each of the industries, model treatment systems have been proposed which are considered capable of attaining the recommended RWL reduction. It should be noted and understood that the particular systems were chosen for use in the economic analysis only, and are not the only systems capable of attaining the specified pollutant reductions.

There are many possible combinations of in-plant and end-of-pipe systems capable of attaining the effluent limitation guidelines and standards of performance suggested in this report. The complexity of the Miscellaneous Chemicals industry, however, dictated the use of only one treatment model for each subcategory for each effluent level.

It is the intent of this study to allow the individual manufacturer within the Miscellaneous Chemicals industry to make the final decision about what specific combination of pollution control measures is best suited to his situation in complying with the limitations and standards presented in this report.

A. Pharmaceutical Industry

General

Pharmaceutical wastewaters vary in quantity and quality depending on the type of manufacturing activities employed by the various segments of the industry. However, in general, the wastes are readily treatable. The results of an industry survey indicate that a variety of in-plant abatement techniques are utilized by pharmaceutical plants, and, overall, in-plant wastewater control measures are being practiced throughout the industry. The survey has shown that biological treatment methods are the most prevalent end-of-pipe wastewater treatment systems utilized by the industry.

In-Plant Pollution Abatement

It is within the manufacturing facility itself that maximum reduction, reuse, and elimination of wastewaters can be accomplished. In-plant practices are the major factor in determining the overall effort required in end-of-pipe wastewater treatment. A complete evaluation of the effectiveness of in-plant processing practices in reducing wastewater pollution requires detailed information on the wastewater flows and pollution concentrations from all types of processing units. With such information one could determine the pollutional effect of substitution of one alternative subprocess for another, or of improving operating and housekeeping practices in general. Unfortunately, this kind of information is not available, as the survey contractor in most instances was not permitted to review manufacturing processes in sufficient detail to develop such information.

Despite this lack of specific process wastewater data, there is information of a more general nature which indicates substantial wastewater pollution reduction through in-plant control. Specific in-plant techniques that are important in controlling waste discharge volumes and pollutant quantities are discussed below:

Housekeeping and General Practices

In general, operating and housekeeping practices within the Pharmaceutical industry are excellent. The competitive nature of the industry, combined with strict regulations from the Food and Drug Administration, requires most producers to operate their plants in the most efficient manner possible. There are numerous examples of good housekeeping practices utilized throughout the industry; a few of the better practices used by exemplary plants are described in the following discussion.

1. All of the plants visited in subcategory D (mixing/compounding and/or formulation) carried out their routine cleaning most efficiently by vacuum cleaning. Most facilities utilized "house"

vacuum systems equipped with bag filters. This practice has resulted in a substantial reduction in the concentration of pollutants and volume of wastewater generated.

2. The use of portable equipment in conjunction with central wash areas is a common practice by many plants throughout the industry. This practice provides better control over the possibility of haphazard dumping of "tail ends" of potentially harmful polluting material to the sewer.

3. Quality control laboratories are an integral part of the Pharmaceutical industry, and solvent and toxic substance disposal practices within the laboratories are further evidence of the apparent industry-wide commitment to good housekeeping. Standard practice throughout the industry is to collect toxic wastes and flammable solvents, especially low-boiling-point solvents like ethyl ether, in special waste containers located within the laboratories. Disposal of these wastes varies within the industry, but the most prevalent practice is to have the wastes disposed of by a private contractor or by on-site incineration.

4. Spills of both liquid and solid chemicals, not only inside production areas, but in general plant areas such as roads and loading docks, can lead to water pollution. In most of the pharmaceutical plants visited a comprehensive spill prevention and cleanup procedures program was an integral part of the plant's good housekeeping procedure. Several plants visited during the survey had excellent spill prevention programs and have efficiently reduced the amount of water used for spill cleanup through the use of vacuum collection devices and "squeegees".

5. Stormwater runoff from manufacturing areas, under certain circumstances, contains significant quantities of pollutants. One exemplary technique for controlling such discharges, observed at several plants during the survey visitations, consisted of containment and monitoring of stormwater for pH. If the stormwater pH exceeds present limits it is then automatically diverted to the waste treatment facility. Uncontaminated stormwater is discharged without further treatment.

6. The survey indicated that disposal of off-specification batches to the sewer system is not a wide-spread practice because of the high value of the product. Most of the subcategory D plants visited reprocessed their off-specification liquid formulation batches and either discharded the off-specification solid products in a landfill or reformulated them when possible. Plants in other subcategories, when reprocessing is not possible, either incinerate off-specification batches or collect them in drums and dispose of them via a private disposal contractor.

Process Technology

Many of the newer pharmaceutical plants are being designed with reduction of water use and subsequent minimization of contamination as design criteria. Improvements which have been implemented in existing plants are primarily dedicated to better control of manufacturing processes and other activities with regard to their environmental aspects. Examples of the kinds of changes which have been implemented within plants surveyed are:

1. The use of barometric condensers (Figure VIIA-1) can result in significant water contamination, depending upon the nature of the materials entering the discharge water stream. This could be substantially reduced by substituting an exchanger for water sprays as shown on Figure VIIA-1. As an alternative, several plants are using surface condensers to reduce hydraulic or organic loads.

2. Water sealed vacuum pumps often create water pollution problems. Several plants are using a recirculation system as a means of greatly reducing the amount of water being discharged. These systems often require the recycle water to be cooled.

3. The recovery of waste solvents is a common practice among plants using solvents in their manufacturing processes (subcategory A - Fermentation Products; subcategory C - Chemical Synthesis Products; and to a lesser extent subcategory B - Biological Products). However, several plants have instituted further measures to reduce the amount of waste solvent discharge. Such measures include incineration of solvents that cannot be recovered economically and "bottoms" from solvent recovery units and design and construction of solvent recovery columns to strip solvents beyond the economical recovery point.

4. One plant (19) producing large amount of organic arsenic eliminated the discharge of this toxic substance by recovering the arsenic. Arsenic-laden waste streams are segregated and concentrated before being reused. Non-recoverable arsenic residues are drummed and shipped to an approved landfill.

5. Several techniques have been employed by various subcategory A plants in an effort to reduce the volume of fermentation wastes discharged to end-of-pipe treatment systems. These include concentration of "spent beer" wastes by evaporation and dewatering and drying of waste mycellia. The resulting dry product in some instances has sufficient economic value as an animal feed supplement to offset a part of the drying cost.

6. One plant (01) has installed automatic COD monitoring instrumentation, and others have utilized pH and TOC monitoring to permit early detection of process upsets which may result in excessive discharges to sewers.

FIGURE VIIA-1

BAROMETRIC CONDENSER

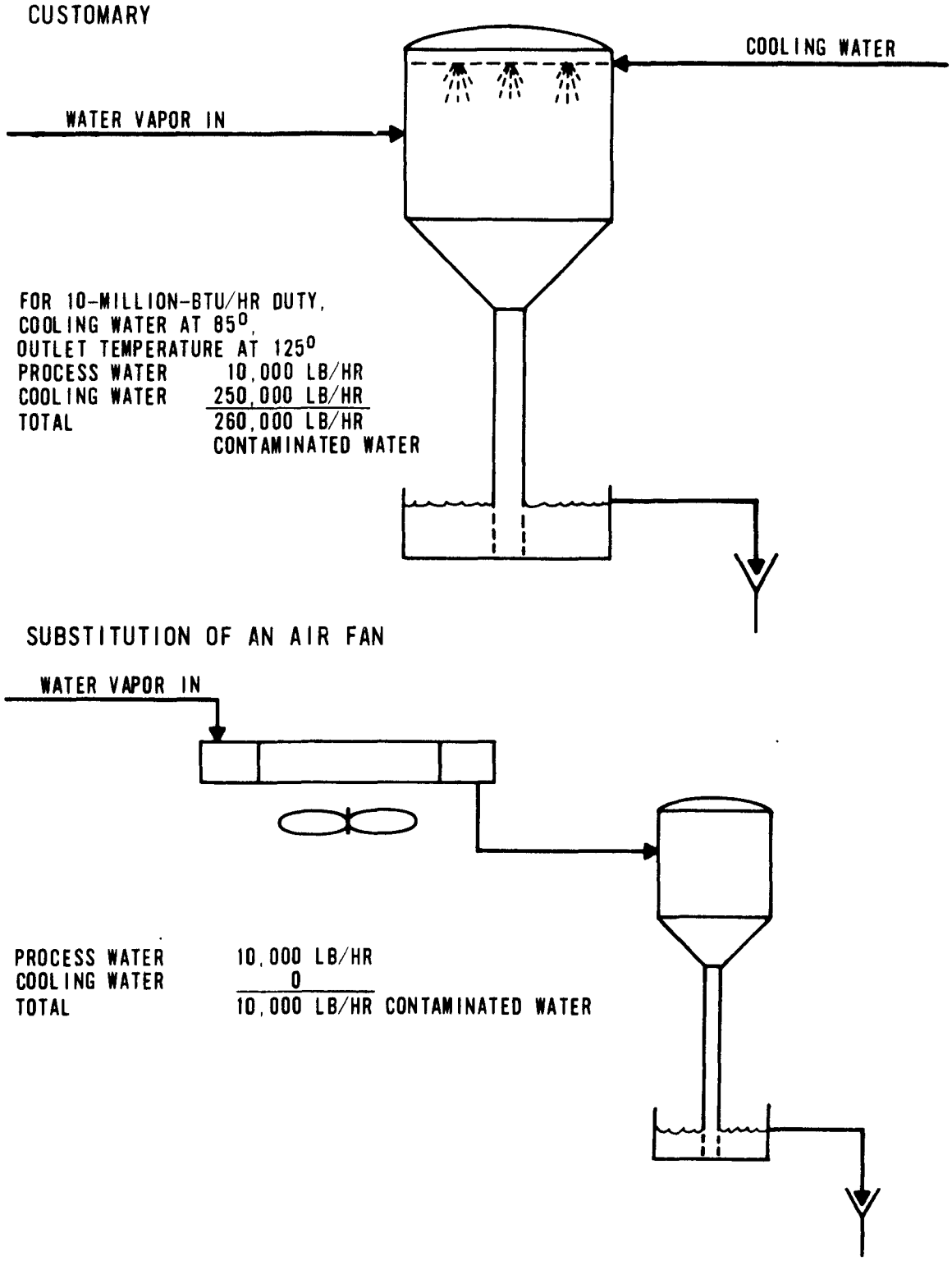

7. Several plants (08, 12, 17) in subcategory B (Biological Products) segregate the spent eggs used in virus production and the waste plasma or blood fractions used in blood fractionation procedures. These were disposed of by incineration at all plants.

8. Substitution of chemicals in this industry may be possible; however, the research program required to obtain FDS approval can cost as much as the original studies to obtain approval of the product.

9. Some plants practice ocean discharges or deep-well injection following a pretreatment to dispose of process wastewater. Recent regulations tend to limit the use of ocean discharge and deep-well injection because of the potential long-term detrimental effects associated with these disposal procedures.

Recycle/Reuse Practices

Recycle/reuse can be accomplished either by returning wastewater to its original use, or by using it to satisfy a demand for lower quality water. The recycle/reuse practices within the pharmaceutical industry are varied and only a few examples are described briefly below:

1. Reduction of once-through cooling water by recycling through cooling towers is used in numerous plants and results in tremendously decreased total effluents.

2. Dilute waste scrubber waters are collected by one pharmaceutical (01) plant and are used to wash equipment. Although this practice is not applicable to all segments of the industry it can lead to a substantial reduction in water usage and should be considered in situations where it does not pose a serious threat to product contamination.

3. Several plants (17) reuse waste deionized rinse water for cooling tower makeup.

4. Waste cooling water from one plant (18) was collected in an aesthetically located pond and held as a source of water for fire protection.

At-Source Pretreatment

The survey indicated that at-source pretreatment was practiced by very few plants on an industry-wide basis. Those manufacturing plants utilizing at-source pretreatment were all in subcategory C. The particular pretreatment processes utilized are discussed below:

Cyanide Destruction

The purpose of the cyanide treatment is to reduce high levels of cyanide from raw waste streams by alkaline chlorination prior to

discharging the waste into an activated sludge treatment system. The treatment of cyanide wastes by alkaline chlorination involves the addition of chalorine to a waste of high pH. Sufficient alkalinity, usually $Ca(OH)_2$ or NaOH, is added prior to chlorination to bring the waste to a pH of about 11. Violent agitation must accompany the chlorination, to prevent the cyanide salt from precipitating out prior to oxidation and hydrolysis. About 7 to 9 pounds each of caustic soda and chlorine are normally required to oxidize one pound of CN to N_2 and CO_2. However, variation can be expected, depending on the COD and alkalinity of the waste. Destruction of 99.7 percent of cyanide has been achieved by one plant (11).

Cyanide removal can also be accomplished by electrolytic destruction (A-26) and by ozonation (A-27). Mercury removal can also be accomplished by other techniques (A-18) such as sulfide precipitation, ion exchange, reduction or adsorption.

Mercury Removal

One manufacturing plant (02) in subcategory C produces a product requiring the use of mercury. The waste from this process contains about 25 mg/L of mercury. In order to protect the biological treatment system utilized to treat the plant's chemical wastes, the mercury-contaminated wastewater is pretreated. Pretreatment consists of exposing the waste to zinc under the proper chemical conditions to permit the amalgamation of the two metals. The mercury concentration has been reduced to less than 5 mg/L, the contents of the holding tank are mixed with other chemical wastes to further reduce the mercury concentration before it is discharged to activated sludge treatment. The mercury-zinc sludge is disposed of by a private disposal contractor.

Ammonia Removal

Two plants (05, 11) in subcategory C uses ammonia compounds in its manufacturing process resulting in waste streams containing 2.5 to 3.0 percent ammonia. A steam stripping column is utilized to reduce this concentration to about 0.6 percent after which it is mixed with other chemical waste streams to dilute it before treatment by an activated sludge system. The stripped ammonia is returned to the process and reused.

Sewer Segregation

Wastewater quantity is one of the major factors that affect the cost of waste treatment facilities. In order to provide efficient treatment to the wastes originating within a pharmaceutical plant it is

important to consider segregation of concentrated waste streams, since it frequently simplifies waste treatment problems. Preferably, the wastewaters should be segregated into several streams to economize treatment of the following various types of wastewater:

1. Strong waste streams.

2. Weak waste streams.

3. Contaminated stormwater from padded process areas and tank farms.

4. Special wastes such as spent caustics, spent acids, waste solvents and metal-bearing wastes.

Segregation and incineration of strong waste stream is being practiced by many pharmaceutical plants; however, potential for further segregation still exists. It is conceivable that plant utilizing a variety of manufacturing processes could further separate their waste streams to optimize the overall treatment efficiency of their waste treatment program. For example, some plants might find that the most cost-effective waste treatment program would include incineration of extremely concentrated waste, biological treatment of intermediate strength waste, and dilution of weak strength wastes with the effluent from the biological treatment plant. The feasibility of such an approach should be examined by plants when considering treatment systems for achievement of BATEA effluent limitations.

Separation of stormwater runoff is practiced through the industry and, as discussed previously, this practice often facilitates the isolation and treatment of contaminated run-off. The isolation of wastes containing pollutants that may require specialized treatment is also a demonstrated practice in the Pharmaceutical Industry which permits effective removal of such pollutants as metals, arsenic, ammonia, cyanide and other chemicals that may be toxic or inhibitory to biological treatment systems.

Segregation of non-contact cooling water is also practiced within the industry. This practice not only reduces the quantity of wastewater that must be treated, but also facilitates water reuse either prior to or after treatment.

End-of-Pipe Control Technology

Table VIIA-1 indicates the types of wastewater treatment technology observed during the survey and the treatment systems identified by consultation with Regional EPA Offices. End-of-pipe control technology in the Pharmaceutical Industry relies heavily upon the use of biological treatment methods. When used, pretreatment most often consists of equalization basins to minimize shock organic loads,

Table VIIA-1

Treatment Technology Survey

Pharmaceutical Industry

TYPE OF TREATMENT OR DISPOSAL FACILITY	NUMBER OF TREATMENT FACILITIES OBSERVED DURING FIELD SURVEY	PLANT NO.	ADDITIONAL TREATMENT FACILITIES IDENTIFIED IN NPDES PERMIT APPLICATIONS
Activated Sludge	8	02, 05, 11, 19, 15, 20, 02, 14	6
Activated Sludge/Polishing Pond	2	10, 16	-
Activated Sludge/Phosphate Precipitation	1	14	-
Bio-Filter/Activated Sludge	2	04, 18	-
Aerated Lagoons	-		2
Aerated Lagoon/Settling Pond-Polishing Cascade	1	09	-
Aerated Lagoon/Phosphate Precipitation	1	08	-
Trickling Filters	-		1
Evaporation	1	01	2[1]
Thermal Oxidation	1	01	-
Pretreatment/To Municipal Treatment Plant (H_2O_2 + Oxinite Addition)	1	17	-
To Municipal Treatment	2	03, 12	12

[1] One is under construction, one is being designed.

neutralization to insure optimum environmental conditions are present, and clarifiers for removal of solids. Other pretreatment systems observed include cooling of waste to reduce temperatures and use of roughing filters to reduce organic loadings. Effluent polishing was utilized by many plants, and systems observed included polishing ponds, cascades and sand filters. Odor control and phosphate removal systems were also observed. One pharmaceutical plant (01) manufacturing subcategory A and C products utilized thermal oxidation and a liquid evaporation process to treat their wastewaters. No activated carbon adsorption systems were observed.

Though the present practice is to select a biological treatment method as an end-of-pipe treatment, other treatment techniques are emerging with good potential. The evaporation and the thermal oxidation of strong wastestreams are becoming more attractive for those wastewaters which have significant fuel value. In some case, high fuel requirement would discourage the use of such techniques. Deep well injection and ocean disposal are being practiced for strong chemical wastes, but the recent regulation trend limits the use of ocean discharge and deep-well injection because of the potential long-term detrimental effects associated with these disposal procedures. As a result of Public Law 93-523, EPA is in the process of developing guidelines which cover deep-well injection of potentially hazardous wastewaters. Other techniques including reverse osmosis, ultrafiltration, ozonation and ion exchange are being studied and have good potential. For treating strong pharmaceutical wastewater, an activated sludge system using pure oxygen system is utilized by a pharmaceutical plant. The pure oxygen system has an additional advantage of odor control.

One of the initial criteria used to screen pharmaceutical plants, for the field survey, was the degree of treatment provided by the wastewater treatment facilities. During the survey program historical wastewater treatment plant performance was obtained when possible. The historical data were analyzed statistically, and the individual plant's performance evaluated.

After this evaluation, a group of exemplary plants were selected on the basis of operation and performance. The historical treatment data from the exemplary plants were analyzed statistically to formulate the basis for developing BPCTCA effluent criteria. A summary of these statistical analyses is presented in Table VIIA-2. The amount of analytical data used in the statistical analyses are indicated in the "data base" column of Table VIIA-2, and the removal efficiencies and effluent concentrations shown correspond to 90, 50 and 10 percent probability of occurrence.

During the survey program, 24-hour composite samples of influent and effluent of the wastewater treatment plant over a two to five day

Table VIIA-2

Summary of Statistical Analysis of Historical Treatment Data
(Exemplary Plants

Pharmaceutical Industry

Plant No	Subcategory	Type of Treatment	BOD_5 Removal Efficiency P_{90}	P_{50}	P_{10}	Effluent BOD_5 P_{90} mg/L	P_{50} mg/L	P_{10} mg/L	COD Removal Efficiency P_{90}	P_{50}	P_{10}	Effluent COD P_{90} mg/L	P_{50} mg/L	P_{10} mg/L	TOC Removal Efficiency P_{90}	P_{50}	P_{10}	Effluent TOC P_{90} mg/L	P_{50} mg/L	P_{10} mg/L	Effluent TSS P_{90} mg/L	P_{50} mg/L	P_{10} mg/L	DATA Duration Months	Type of Data Period
04	A & C	Activated Sludge	93	85	69	570	310	123	-	-	-	-	-	-	-	-	-	-	-	-	-	-	-	24	D values
19	A & C	Activated Sludge	98	97	84	433	100	40	-	-	-	-	-	-	[illegible]	[illegible]	[illegible]	[illegible]	290	[illegible]	803	147	64	12	Weekly Values
11	C	Activated Sludge	96	92	83	163	51	29	90	86	80	584	382	234	-	-	-	-	-	-	143	53	24	18	Daily Values
05	D & E	Activated Sludge	98	95	89	20	8	3	96	91	71	198	30	19	-	-	-	-	-	-	29	11	[illegible]	19	Bi-weekly Values
14	E	Activated Sludge	98	97	94	3.0	1.4	0.9	95	90	78	28.0	16.8	10.8	-	-	-	-	-	-	13	4	[illegible]	9	Daily Values
08	B	Aerated Lagoon	97	77	17	13.1	3.5	1.8	92	53	6	68.0	32.[illegible]	20.8	-	-	-	-	-	-	40	22	11	12	Daily Values
Average Activated Sludge Systems			97	93	84				94	89	76				[illegible]	81	[illegible]								

period were collected in order to verify the plants' historical performance data, as well as to provide a more complete wastewater analytical profile. The performance characteristics which were observed during the survey are presented in Table VIIA-3.

Of the fourteen biological treatment plants visited, five treated multiple subcategory wastes (Plant Nos. 02, 04, 05, 09, 19). The summary table above illustrates that there is no significant difference in the removal efficiencies for exemplary plants treating multiple subcategory wastes and those treating single subcategory wastes.

Historical treatment plant data was reviewed so that it would be possible to quantify BPCTCA reduction factors, which would then be applied to raw waste load values for each subcategory in order to develop effluent limitations guidelines. On the basis of historical performance data for the exemplary biological treatment plants, the following treatment efficiencies were selected as being applicable for the development of BPCTCA treatment technology, on the basis of data presented in Table VIIA-3.

Parameters	Subcategories A, B, C_1, D, & E	Subcategory C_2
BOD_5	93%	99%
COD	89%	99%
TOC	81%	99%

Selection of the reduction factors for subcategory C_2 was based on observed performance of one thermal oxidation plant. The plant observed obtained BOD_5, TOC and COD removal in excess of 99 percent; however, in order account for the miscellaneous streams being discharged separately, 99 percent removal was selected as being applicable for BPCTCA technology.

In addition to BOD_5, COD and TOC the other major pollutant to be considered is total suspended solids (TSS). As indicated in Tables VIIA-2 and VIIA-3, limited historical TSS removal data were available and survey TSS removal data exhibited a wide range in removal efficiency. As previously mentioned, the majority of treatment plants surveyed were biological treatment systems.

Such treatment systems generate biological solids which must be removed before discharge of the effluent and unless one is thoroughly familiar with a particular plant's operation, it is difficult to interpret TSS data. For this reason, recommendation concerning TSS will be based on effluent concentration.

Since flocculator-clarifiers with polymer addition have been used in other industries to reduce TSS in effluents, this process can also

Table VIIA-3

Treatment Plant Survey Data
Pharmaceutical Industry

Plant No.	Treatment System	Subcategory	BOD % Removal	BOD Effluent mg/L	COD % Removal	COD Effluent mg/L	TOC % Removal	TOC Effluent mg/L	TSS % Removal	TSS Effluent mg/L	NH_3-N Effluent mg/L	Total-P Effluent mg/L
05*	Activated Sludge	D & E	99	3.5	96	28	91	18	88	6.2	2.8	12.3
08*	Aerated Lagoon + Tertiary Treatment PO_4 Precip.	B	68	6.0	38	48	Negative	16	Negative	30	2.8	0.35
14*	Activated Sludge + PO_4 Precip.	E	98	2.2	86	34	84	18	96	10	0.2	0.12
11*	Activated Sludge	C_1	91	202	82	652	85	291	79	60	740	4.3
01*	Evaporation	A_1	83	1050	89	1,690	89	621	99	47	188	1.3
01*	Thermal Oxidizers	C_2	99+	3.8	99+	43	99+	20	95	28	26.5	2.8
02*	Activated Sludge	A_2	99	54	91	205	88	418	87	173	110	11.8
02*	Activated Sludge	$A_2 + C_1$	92	330	82	1,580	84	485	84	353	231	35 8
19*	Activated Sludge	$A_1 + C_1$	96	134	90	680	86	292	85	210	11.4	0.3
09*	Aerated Lagoons Settling Pond - Cascades	A_2 + D	99	26	93	374	89	150	99	3	56.8	6.7
15	Activated Sludge	C_1	30	8700	42	10,500	98	221	86	47	1150	0.71
10*	Activated Sludge Polishing Pond	C_1	96	47	52	1,350	36	606	16	122	11.8	6.7
20*	Activated Sludge	A_1	96	100	89	854	92	213	90	334	5.4	4.1
18*	Bio Filter - Activated Sludge- Sand Filter	D	92	59	83	290	77	120	98	2	5.9	24.0
04*	Bio Filter - Activated Sludge	A & C_1	92	141	83	623	79	265	78	160	218	33.3
Average ALL Exemplary Plants			93		82		83		84			
Average ALL Exemplary Activated Sludge Plants			95		83		80		80			
Average Exemplary Activated Sludge Plants - Subcategory A			98		90		90		88			
Average Exemplary Activated Sludge Plants - Subcategory C_1			94		67		60		48			
Average Exemplary Activated Sludge Plants - Subcategory D			92		83		77		98			
Average Exemplary Activated Sludge Plants - Subcategory E			98		86		84		96			
Average Exemplary Activated Sludge Plants - Multi Subcategories			95		88		85		84			

Note No Activated Sludge Plants Observed for Subcategory B
Designated Exemplary Plants

be applied in the Pharmaceutical Industry as a demonstrated technology capable of achieving low effluent TSS concentrations. On this basis a BPCTCA TSS effluent limitation of 50 mg/L is recommended for subcategories A, C_1 and C_2 and 20 mg/L for subcategories B, D and E.

In order to measure the economic impact of the proposed effluent standards, model biological treatment systems were developed for each subcategory. The end-of-pipe treatment models were designed for each subcategory based on Raw Waste Loads (RWL). The prime design parameter in BPCTCA and BADCT treatment models is BOD_5 removal, whereas COD and TOC removal were considered as secondary design parameters. In the case of BATEA treatment models, COD and TOC were the prime design parameters.

The use of biological treatment models for BPCTCA is done only to facilitate the economic analysis and is not to be thought of as the only technology capable of meeting the effluent limitation guidelines and standards of performance presented in this report.

Activated Carbon Adsorption

No activated carbon treatment systems were observed during the survey; consequently, to investigate the possibilities of using activated carbon technology on the effluents from biological treatment plants treating pharmaceutical wastewaters, a series of carbon isotherms were run at standard conditions using a contact time of 30 minutes. The results of the carbon isotherm tests are presented in Tables VIIA-4, VIIA-5, and VIIA-6. Average performance values for subcategories A and C_1 are as follows:

Parameter	Carbon Exhaustion Rate (lbs removed/lb carbon)	Highest Pollutant Removal Observed (percent)
COD	0.69	80
BOD_5	0.02	77
TOC	0.48	80

Ideally, pilot-plant continuous column studies should be run in order to generate design data. However, inspection of the data in Tables VIIA-9 and VIIA-10 indicates carbon adsorption has potential for subcategories A and C_1, with regard to cost-effective wastewater treatment. The treatment facilities were sized using general conservative criteria from operating systems.

In order to develop BATEA effluent criteria the following treatment efficiencies were judged to be reasonable based on the available data, data presented in process Design Manual for Carbon Adsorption (A-24) and the experience of the contractor.

Table VIIA-4

Summary of COD Carbon Isotherm Tests

Performed on Biological Treatment Plant Effluent

Pharmaceutical Industry

Plant No.	Subcategory	Carbon Exhaustion Rate		Highest Soluble BOD Removal Observed (%)
		lbs. COD Removed / lb. Carbon	lbs. Carbon / 1000 gal.	
19	A&C_1	1.22	2.98	84
08	B	Test Not Conclusive		
14	E	Test Not Conclusive		
11	C_1	0.45	11.3	71
20	A	0.40	5.4	81
05	D&E	Test Not Conclusive		

Table VIIA-5

Summary of BOD_5 Carbon Isotherm Tests

Performed On Biological Treatment Plant Effluent

Pharmaceutical Industry

Plant No.	Subcategory	Carbon Exhaustion Rate		Highest Soluble BOD Removal Observed (%)
		lbs. BOD_5 Removed / lb. Carbon	lbs. Carbon / 1000 gal.	
19	$A\&C_1$	0.021	8.74	77
08	B	0.011	3.79	80
14	E	Test not conclusive		
11	C_1	Test not conclusive		
20	A	Test not conclusive		
05	D&E	Test not conclusive		

Table VIIA-6

Summary of TOC Carbon Isotherm Tests

Performed on Biological Treatment Plant Effluent

Pharmaceutical Industry

Plant No.	Subcategory	Carbon Exhaustion Rate		Highest Soluble TOC Removal Observed (%)
		lbs. TOC Removed / lb. Carbon	lbs. Carbon / 1000 gal.	
11	C1	0.68	2.8	83
20	A	0.25	2.3	77
05	D&E	Test not conclusive		

Pollutant	Subcategories A, B, C1, D and E Removal Efficiency[1] (Percent)
COD	80
BOD_5	77
TOC	80

[1]Incremental over BADCT filtration effluent.

Dual-Media Filtration

Effluent filtration by use of dual-media filters cannot be considered a demonstrated technology for the Pharmaceutical Industry. During the plant survey visit use of this technology was not observed. Consequently, historical data needed to quantify the effectiveness of effluent filtration were not available.

In order to quantify the effectiveness of effluent filtration, samples of biological treatment plant effluents were collected and filtered, using filter paper, to determine the fraction of effluent BOD_5, COD and TOC attributable to suspended solids. Results of these tests are presented in Table VIIA-7. Based on this data, the experience of the contractor, and information contained in the literature, the following suspended pollutant to TSS relationships were selected for the purpose of determining BOD_5, COD and TOC removals obtainable by dual-media filtration:

$$\frac{BOD_5}{TSS} = 0.20; \qquad \frac{COD}{TSS} = 1.14; \qquad \frac{TOC}{TSS} = 0.42$$

These valves are based on $\frac{1.42 \text{ lbs COD}}{\text{lb VSS}}$, $\frac{0.53 \text{ lbs TOC}}{\text{lb VSS}}$, and VSS = 0.8 TSS

Table VIIA-7

Results of Filtration Tests
on Biological Treatment Plant Effluent
Pharmaceutical Industry

Plant	Subcategory	TSS mg/L	Δ BOD_5 mg/L	Δ COD mg/L	Δ TOC mg/L	Δ BOD_5 / TSS	Δ COD / TSS	Δ TOC / TSS
20	A	380	81	1398	114	0.21	3.7	0.30
19	A,C_1	80	128	220	-	1.6	2.8	-
14	E	14	0	19	-	-	1.4	-
08	B	25	0	38	-	-	1.5	-
05	D,E	6	2	18	5	0.33	3.0	0.83

Δ Pollutant = Total effluent pollutant concentration - soluble pollutant concentration

B. Gum and Wood Chemicals Industry

In-Plant Pollution Abatement

The Gum and Wood Chemicals industry is characterized by relatively sophisticated process equipment which has been developed to maximize product yield and reduce air and water pollution. The fact that a number of the plants discharge to municipal treatment facilities has no doubt also influenced both water usage and pollutant levels.

Water management and plant age are the two major factors to be considered when discussing in-plant pollution abatement. As a whole, the industry practices good water management. However, instances of poor water management were observed, with resulting high wastewater flows. Age of equipment primarily has an impact on the cost-effectiveness of modifying process equipment to minimize pollution or to segregate storm and process wastewaters.

Since it is not possible, at the present time, to quantify the effects of water management and equipment age, in general terms, these factors should be handled on a case by case basis. This is particularly feasible in light of the fact that less than five percent of the plants in the Gum and Wood Chemicals industry discharge to surface waters.

End-of-Pipe Treatment

During the study, seven plants in the Gum and Wood Chemicals industry were surveyed and a summary of the treatment technology observed is presented in Table VIIB-1. Plants 59 and 54 provide their own wastewater treatment facilities, while Plants 58 and 55 discharge to municipal treatment plants after pretreatment.

Table VIIB-1

Treatment Technology Survey

Gum and Wood Chemicals Study

Type of Treatment or Disposal Facility	Plant Code No.	No. of Plants Observed
Physical/Chemical - Aerated Lagoon - Oxidation Pond	59	1
Oil/Water Separation - Trickling Filter - Oxidation Pond[1]	54	1
Lime Treatment (Odor Control) - Evaporation Pond	52	1
To Municipal Treatment Plant - No Pretreatment	58	1
To Municipal Treatment Plant - Pretreatment includes equalization, neutralization, and filtration	55	1
Wastewaters Drummed and Sent to Industrial Landfill	57	1
No discharge of process wastewater pollutants	51	1
TOTAL		7

[1]Trickling Filter was not operational during the field survey, nor was performance data available for the historic period reported in Table VIIB-3.

Biological Treatment

During the plant survey program, 24-hour composite samples were obtained to verify historical performance data which was made available by the plants. The results of the plant survey data are presented in Table VIIB-2. Plant No. 59 had experienced a shutdown before the plant visit resulting in the measurement of abnormally high organic removals. Plant No. 54 in contrast, had low pollutant removals since the trickling filter was not operational.

The TDS and oil concentrations measured in the plant effluents in Table VIIB-2 are of such magnitude that they should not impact on the effluent TSS levels which are attainable.

The historical wastewater treatment plant performance data obtained from Plants No. 59 and 54 are presented in Table VIIB-3. The amount of data used in the performance evaluation is indicated in the Data Base column of Table VIIB-3. Influent pollutant concentrations were not recorded for Plant No. 59; therefore, it was not possible to quantify its removal efficiency. The historical data reported for Plant No. 54 was the design basis proposed in a consulting engineer's report which was developed from bench scale biological treatability studies.

Table VIIB-3 also contains design criteria proposed for two plants producing tall oil by-products, which were summarized from two other individual consulting engineers' reports. The design criteria in these reports were also developed from bench scale biological treatability studies simulating aerated lagoon technology. Plants A and B were not visited during the field survey program; however, the information is pertinent and was therefore included in this plant evaluation phase.

The relative biodegradability of the wastewaters from Plant No. 54, A and B were compared using WESTON's mathematical formulation for BOD_5 removal rate and loading ratios.[1] The results of the comparison indicated that these three wastewaters had relatively similar BOD_5 removal rates and therefore could be equitably compared in an evaluation of exemplary treatment plants.

Based on the previous analysis and the performance data in Table VIIB-3, it was concluded that Plants 2, A and B are exemplary in the industry and that the following average reductions can be achieved by exemplary treatment plants:

COD removal	-	73 percent
BOD_5 removal	-	95 percent
Effluent TSS	-	50 mg/L

[1] Process Design Manual for Upgrading Existing Wastewater Treatment Plants. U.S. Environmental Protection Agency. October 1974, pp. 5-22.

Table VIIB-2

Treatment Plant Survey Data

Gum and Wood Chemicals Industry

Plant No.	Treatment System	Sub-category	COD Percent Removal	COD Effluent mg/L	BOD_5 Percent Removal	BOD_5 Effluent mg/L	TOC Percent Removal	TOC Effluent mg/L	TSS Percent Removal	TSS Effluent mg/L	TDS Effluent mg/L	Oil and Grease Effluen mg/L
59[1]	PC-AL-OP	D	79.9	38.9	97.7	1.8	68.3	19	46.7	8	203	2.6
54	OP	C	45.5	590	40.5	333	44.2	199	Negative	62	425	21.3

[1] Performance data not typical since production facilities were shut down prior to plant visit.

Legend

PC - Primary Clarifier
AL - Aerated Lagoon
OP - Oxidation Pond

Table VIIB-3

Historic Treatment Plant Performance

Gum and Wood Chemicals Industry

Plant No.	Treatment System	Sub-category	COD Percent Removal	COD Effluent mg/L	BOD_5 Percent Removal	BOD_5 Effluent mg/L	TSS Percent Removal	TSS Effluent mg/L	Data Base Duration (months)	Data Base Performance Period
59	PC-AL-OP	D	-	65	-	10.6	-	2.2	2 (July-Aug)	Daily Grab Sample
54	PC-AL	C	-	310	90	187	-	50	3 (Sept-Nov)	Daily Composite Samples
A[1, 2]	AL	D	53.9	2,110	96	83	-	50	3 (June-Aug)	Daily Composite Sample
B[1, 2]	DAF-AL	D	93	190	98.8	40	-	30	2 (Nov-Dec)	Daily Composite Sample
Average			73		95					

[1] Exemplary Treatment Plants.

[2] Design basis proposed in a consulting engineer's report which was developed from bench scale biological treatability studies.

Legend

PC - Primary Clarifier
AL - Aerated Lagoon
OP - Oxidation Pond
DAF - Dissolved Air Flotation

Biological Treatment Plant Effluent Filtration

Filtration of biological treatment plant effluent is one method of providing supplemental removal of solids and organic material. In addition, the use of polishing ponds after biological treatment is a common method in the industrial wastewater treatment field for reducing effluent pollutants.

BOD_5 is reduced by filtration mostly by removing suspended solids. Therefore, the percentage reduction of BOD will be significantly affected by the suspended solids level in the treated effluent to be filtered.

The following analysis was developed to equitably quantify the expected BOD reduction attributable to biological treatment plant effluent filtration:

Pollutant (mg/L)	Plant No. 54 Biological Treatment Effluent Design Data	Calculated Filtration Effluent From Plant No. 54
Total BOD_5	187	172
Soluble BOD_5	162	162
Suspended BOD_5	25	10
TSS	50	20

The data for previous biological treatment effluent is taken from Table VIIB-3 and the consulting engineer's report referred to therein. The calculated effluent concentrations were determined by calculations based on 60 percent removal of the TSS and the corresponding suspended BOD component, resulting in an overall BOD_5 reduction of 8 percent. This 60 percent removal factor is based on the contractor's experience in filtration of industrial wastewaters at typical effluent TSS levels under discussion.

A corresponding analysis was performed using COD data and the results are shown below:

Pollutant (mg/L)	Plant No. 54 Survey Data	Calculated Filtration Effluent From Plant No. 54
Total COD	590	510
Soluble COD	457	457
Suspended COD	133	53

Soluble COD data was not available to correspond to the BOD_5 values used in the previous analysis; therefore, survey data from Table VIIB-2 was used. An overall COD reduction of 13 percent would result with the use of effluent filtration.

In summary, it is expected that the application of effluent filtration to biological treatment would result in the following average reductions:

COD removal	-	13 percent
BOD_5 removal	-	8 percent
Effluent TSS	-	20 mg/L

Carbon Adsorption

During the plant survey program, a sample of treatment plant effluent from Plant No. 54 was evaluated using a carbon isotherm. The results of the isotherm are presented in Table VIIB-4. The maximum soluble COD removal was 99 percent, which corresponds to an exhaustion rate of 0.59 pounds COD/pound carbon.

In the past, Plant No. 59, which produces products in subcategories B and F, evaluated the applicability of carbon adsorption for treatment of biological effluent. The results of the evaluation are summarized in Table VIIB-5. Only 31 percent of the soluble TOC was removed with a carbon dose of 100 gm/L. The fact that carbon did not prove cost-effective led to the eventual recommendation that incineration be considered for their highly concentrated waste streams. These two cases merely illustrate that carbon adsorption is not universally applicable to all wastewaters in the Gum and Wood Chemicals industry. However, alternative wastewater treatment technology is available on a cost-effectiveness basis.

BPCTCA Treatment Systems

Biological treatment plant data was reviewed so that it would be possible to quantify BPCTCA reduction factors. These factors, applied to standard raw waste load figures for each subcategory, make it possible to generate recommended effluent limitation guidelines. The previous discussions of biological treatment indicate that the following pollutant reduction factors are consistent with BPCTCA treatment technology:

Parameter	Reduction Factors Applied to Average BPCTCA RWL
BOD_5[1]	95 percent
COD	73 percent
TSS	50 mg/L

[1]Controlling Parameter.

Table VIIB-4

Summary of COD Carbon Isotherm Data

Gum and Wood Chemicals Industry

Plant No.	Influent Soluble COD (mg/l)	Effluent Soluble COD (mg/l)	Maximum Soluble COD Removal (percent)	Carbon Exhaustion[1]	
				Lbs. COD Removed Per Lb. Carbon	Lbs. Carbon Per 1,000 gal.
54	457	5	99	0.59	3.8

[1]Powered carbon dose varied between 0.6 and 4.8 gm/l.

Table VIIB-5

Gum and Wood Chemicals Industry

Summary of Individual Isotherm Data[1]

Plant No.	Subcategory	Influent Composite Soluble TOC (mg/L)	Effluent Composite Soluble TOC (mg/L)	Soluble TOC Removal	Powered Carbon Dose (gm/L)
55	B and F	6,520	4,490	31%	100

[1]Summarized from an engineering report prepared for Plant 55 by a carbon manufacturer.

The BPCTCA effluent discharge recommendations will be made only for BOD. TSS is expressed as a concentration limitation because BPCTCA raw waste loads are minimal (as indicated in Section VI). The major source of TSS is biological treatment plant effluents is biological solids.

BADCT Treatment Systems

Based on the previous discussion of biological treatment plant effluent filtration, the following equitable waste reduction factors commensurate with BADCT treatment technology have been developed:

Parameter	Reduction Factors Applied to BPCTCA Effluent Limitations
BOD[1]	8 percent
COD	13 percent
TSS	20 mg/L

[1]Controlling Parameter.

BATEA Treatment Systems

The quantity and quality of the data available for establishing BATEA reduction factors for the Gum and Wood Chemicals industry is sparse. Therefore, any recommendations made must be based on general experience in related industries. As additional performance data becomes available from the EPA National Environmental Research Center and various EPA-funded demonstration grants within the Gum and Wood Chemicals industry, the existing data base will be expanded and updated. However, at this point in time the following reduction factors are considered to be commensurate with BATEA treatment technology:

Parameter	Reduction Factors Applied to BPCTCA Effluent Limitation	Minimum Monthly Average Effluent Concentration (mg/L)
BOD	70 percent	10
COD	70 percent	-
TSS	20 mg/L	10

C. Pesticides and Agricultural Chemicals Industry

The characteristics of wastewaters generated within the Pesticides and Agricultural Chemicals industry are highly variable and, in general, require substantial pretreatment before they can be oxidized by biological treatment systems. A variety of in-plant abatement techniques are utilized by the industry. The most prevalent end-of-pipe wastewater treatment facilities utilized by the industry are biological oxidation systems.

In-plant Control

It is not possible to recommend a general list of process modifications or controls which would be applicable to all processes within the Pesticide industry or even within one subcategory. Therefore, the following discussion deals with individual techniques which have general application to most instances where a particular unit process or waste type is encountered.

The techniques described are based on both the practices observed during the sampling visits as well as those which have been described in the literature. In most cases, they can be implemented with existing processes or be designed into new ones.

The general effect of these techniques is to reduce both the pollutant RWL and the volume of contact process water discharged for end-of-pipe treatment.

Waste segregation is an important and fundamental step in meeting the needs of the proposed standards of treatment. The following factors generally form the primary basis for waste segregation, containment, and isolation.

1. Wastewaters with high organic loadings frequently require stripping or incineration as opposed to conventional end-of-pipe treatment.

2. Wastewaters with high acidity or alkalinity should be neutralized prior to being mixed with the rest of the process wastewater.

3. Wastewaters with separable organics or solids should be decanted or settled separately.

4. Wastewaters with high BOD loadings or toxic characteristics require storage and gradual bleed-in facilities.

Dry or non-water techniques can be substituted for water-based techniques. Potential areas where this type of substitution are possible are:

1. Substitution of an organic solvent for water in the synthesis and separation steps of the production process. The solvent can be recovered, whereas water used in these applications is most frequently discharged.

2. Substitution of dry cleanup methods for water washdowns. This is applicable for situations where liquid or solid materials have been spilled.

In many cases decanter systems do not perform satisfactorily. This can be caused by overloading, poor design, or flow surge characteristics. In many cases, however, the problem is not so much in the design but rather the decanter does not perform adequately owing to the inherent characteristics of the waste stream. In such instances, satisfactory overall organics removal can be obtained by installing a coalescer downstream of the decanter.

Many pesticide products, intermediates, or wastes are recovered via filtration and the filtrate is then discharged. In some cases, the filtrate contains residual suspended solids owing to incomplete filtration, and additional filtration of the filtrate stream is called for.

Steam jet ejectors and barometric condensers can be replaced in most cases with vacuum pumps and surfact condenser systems. Barometric condenser systems are a major cource of organic contamination and high hydraulic loads in pesticide plant effluents.

Specific In-Plant Control Technologies

Subcategory A - Halogenated Organic Pesticides

Many of the chlorinated organic pesticides are manufactured via a direct chlorination process. Residual chlorine and by-product hydrogen chloride gases are frequently vented from this process; the common technique of control involves water or caustic soda scrubbing, resulting in a wastewater discharge. An alternative approach applicable to some situations is to recycle the vented chlorine gas and to recover the hydrogen chloride, as dry gas or munatic acid.

Subcategory B - Organo-Phosphorus Pesticides

Preferably, detoxification of organo-phosphorus wastes should be carried out at-the-source prior to combination with other plant wastewaters. Following are several reasons for this.

1. Detoxification can be more readily taken to a high degree of conversion on a concentrated, segregated waste stream than can be accomplished on a dilute, combined effluent.

2. The size of detoxification equipment can be minimized.

3. Higher temperatures, necessary for fast detoxification, can be maintained more readily.

4. Lime addition, lime solids disposal, and acid back-neutralization requirements are less for a concentrated waste stream.

High ammonia levels are a problem in some sectors of the organophosphorus industry. Although ammonia stripping is not a proven technology for this industry as a whole, there is potential for ammonia stripping on those isolated waste streams with high ammonia loadings. In most cases, it is necessary to recover the stripped ammonia in order to avoid creating an air pollution problem. This latter requirement is generally the reason that ammonia stripping is considered very costly as a solution to wastewater ammonia problems.

Subcategory C - Organo-Nitrogen

Potentially some sectors of the organo-nitrogen industry can produce cyanide-laden waste streams. In such cases, the cyanide-laden streams should pass through a cyanide removal unit where the toxic cyanide group is oxidized with chlorine in an alkaline medium to the significantly less toxic cyanate species. This technology is proven and, although not common to the Pesticide industry (because of need rather than applicability), it is used in other industries where cyanide wastes are encountered.

Subcategory D - Metallo-Organic

The manufacture of many of the metallo-organic pesticides, particularly the carbamate-type products, generage wastewaters containing metals. These metals require removal from the concentrated and segregated process wastes prior to dilution with the other plant effluents. Generally, the most appropriate metals-removal technology is lime precipitation followed by sedimentation. If metals removal is carried out on the concentrated individual stream as opposed to the combined effluent, lime addition and disposal requirements are minimized, acid back-neutralization needs are generally reduced, and better overall metal removals can be achieved.

Subcategory E - Formulators and Packagers

Formulation and blending operations are generally batchwise, and equipment is multi-product in nature. Vessels are cleaned out between batches to avoid cross-contamination. Many plants now employ wash liquid storage tanks to hold vessel wash liquids in order that they can be used for makeup purposes at the next formulation of the same product. This procedure reduces the total quantity of wastewater discharged and minimizes product losses. This approach can be applied in plants where both water- and solvent-based products are manufactured.

End-Of-Pipe Treatment

Table VIIC-1 summarizes the types of wastewater treatment technology observed during the survey. End-of-pipe control technology within the Pesticides and Agricultural Chemicals industry generally consist of biological oxidation systems such as activated sludge or aerated lagoons.

Table VIIC-2 summarizes the characteristics of the final effluent from the treatment plants of various pesticide facilities. The data were obtained from historical records and analyses of samples taken during plant visits (see Table VIIC-3). These data are used as the basis for effluent limitations.

For the most part, the recorded values reflect good wastewater management and practicable and appropriate in-plant or at-the-source controls. The end-of-pipe treatment processes are appropriate for their specific waste types and, in most cases, include biological oxidation systems such as activated sludge or aerated lagoons. Where possible, the data were based on current operations, but in some cases, supplemented with data from well-designed pilot-plant studies. Where a plant manufactures more than one subcategory of pesticides, the combined effluent loadings are presented since it was difficult to realistically separate the contributions of the individual subcategories.

The use of biological treatment models is done only to facilitate the economic analysis and is not to be thought of as the only technology capable of meeting the effluent limitation guidelines and standards of performance presented in this report.

Table VIIC-1

Treatment Technology Survey

Pesticides and Agricultural Chemicals Industry

Type Treatment	No.	Key Design Criteria
Pretreatment:		
Alkaline Hydrolysis	2	Plant 68 - 12 hour detention, 100°F; Plant 69 - 16 hours detention
Cyanide Removal	1	Plant 62 - pH 10.5 or above
Oil Separation	2	Plant 66 - no details; Plant 68 - 4 hours detention, API type
Lime Precipitation	1	Plant 61 - pH 9.5
Metals Precipitation	1	Plant 71 - estimated 24-hour detention
Final Treatment:		
Activated Sludge	2	Plant 63 - 2 days detention prior to discharge to municipal treatment; Plant 64 - shows detention, 95% BOD removal
Aerated Lagoons	5	Plant 62 - 15 days detention; Plant 65 - no details; Plant 66 - 7 days detention, Plant 69 - 25 days detention, 50% COD removal; Plant 71 - estimated 5 days detention
Trickling Filter/Activated Sludge	1	Plant 64 - 13 mgd, 1.45 acres, COD loading 65 lbs/day/1,000 cu ft, (aerated lagoon follows trickling filter)
Incineration	2	Plant 63 - no details; Plant 64 - Tar wastes, 1,800°F, 3-9 gpm
Deepwell Disposal	3	Plant 62 - no details; Plant 64 - depths 4,000 ft; Plant 65 - 50,000 gpd
Discharge to Municipal System	3	Plant 63 - wastes pretreated with 95% removal of TOC and 100 ppm COD, Plant 69 - 76,000 gpd untreated; Plant 70 - 3.2 mgd, 2,800 lbs/day COD

Table VIIC-2

Effluent Quality Data From Selected Pesticide Production Facilities
Pesticides and Agricultural Chemicals Industry

Plant	Product Subcategories	BOD		COD		TOC		Oil		Suspended Solids		Phenol		Total Phosphus		Total Kjeldahl Nitrogen		Cyanide		Heavy Metals	
		kg/kkg	mg/L	kg/kkg	mg/L	kg/kkg	mg/L	kg/kkg	mg/L	kg/kkg	mg/L	kg/kkg	mg/L	kg/kkg	mg/L	kg/kkg	mg/L	kg/kkg	mg/L	(kg/kkg)	mg/L
61	B	1.67	50	-	-	-	-	-	-	0.84	25	0.017	0.5	-	-	-	-	-	-	-	-
62	B&C	1.96	20	-	-	-	-	-	-	-	-	-	-	-	-	-	-	-	-	0.252	-
	B&C[1]	0.79	8	14.3	146	5.68	58	0.05	0.5	1.86	19	0.01	0.066	0.05	0.5	2.43	24.5	0.01	0.02	-	-
63	B	-	-	7.95	272	5.42	187	-	-	1.10	38	0.001	0.005	[illegible]	24	[illegible]	0.05	-	-	-	-
64	A_1	0.23	12	-	-	-	-	-	-	1.14	60	-	-	-	-	-	-	-	-	-	-
	A	0.13	7	3.59	189	0.65	34	0.07	3.7	-	-	0.001	0.05	0.01	0.52	0.19	9.8	0.007	0.37	-	-
65	B_1	0.29	110	1.76	678	0.24	92	-	-	0.0	0.0	-	-	0.28	106	0.003	1.1	-	-	-	-
	B[1]	0.21	80	1.50	575	0.28	106	0.001	0.5	0.11	42	0.001	0.02	0.02	8.6	0.012	4.5	0.001	0.02	-	-
66	E_1	-	-	0.08	202	0.004	10	-	-	-	-	-	-	-	-	-	-	-	-	-	-
	E[1]	0.0036	9	0.024	60	0.013	32	0.0002	0.5	0.086	216	0.001	0.002	0.002	0.42	0.002	0.2	0.001	0.02	-	-
68	B_1	0.47	130	1.4	390	-	-	-	-	0.63	175	-	-	0.23	65	-	-	-	-	-	-
	B[1]	0.13	36	0.53	146	0.14	39	0.01	3.0	0.01	3	0.001	0.016	0.006	1.7	0.013	3.6	0.001	0.02	-	-
71	D	3.2	12.5	18.5	72.1	-	-	-	-	5.3	20.5	-	-	-	-	5.1	19.9	-	-	0.18	0.7(Mn)
	D	0.51	2	27.5	107	8.48	33	1.3	5.1	5.4	21	0.004	0.016	0.09	0.36	6.4	25	0.001	0.028	0.15	0.6(Mn)

[1] Data - Obtained by plant visit and samples analyses

DRAFT

Table VIIC-3

Source of Historical Data - RWL

Pesticides and Agricultural Chemicals Industry

Plant No.	Source
61	1) Pilot plant study February 1973, average of 6 samples. 2) In-house report, 26 September 1974.
62	Undated data supplied by plant personnel.
63	Average of 4 samples between March and April 1974.
64	Daily samples April 1972 to March 1973.
65	Monthly average, April 1974.
66	Undated data supplied by plant personnel.
67	Undated data supplied by plant personnel.
68	Based on plant-developed material balance.
69	Daily samples, 12-day period November 1974
70	Daily samples, January through May 1974.
71	Based on plant-developed material balance.
72	Estimates by plant personnel.

D. Adhesives and Sealants Industry

In-Plant Pollution Abatement

In-plant control technology is dependent upon two major considerations:

1. Process requirements for water usage and the pollutants resulting from these operations, such as unreacted raw materials, partially reacted by-products which must be removed to meet major product specifications, catalysts or accelerators required for controlling the reactions, and additives necessary to provide the appropriate chemical characteristics; and

2. Emission of pollutants into water streams due to poor housekeeping practices, excessive use of water for control of hazardous conditions such as fires, leaks, and spills due to inadequate equipment maintenance, and accidental occurrences due to equipment failure or personnel errors. The major way to control the emission of pollutants from spills and leaks is to recognize the potential that exists in various areas of the plants.

The process modifications and control measures discussed below are applicable to all of the processes within the Adhesives and Sealants industry because of the fact that all adhesive manufacturing processes are similar. The techniques described are based on both the practices observed during the sampling visits and those which have been described in the literature. In most cases, they can be either implemented with existing processes or designed into new ones.

The reduction or elimination of water-borne pollutants in the Adhesives and Sealants industry depends upon the following factors:

1. The replacement of present technology with technology which generates fewer water-borne pollutants.

2. The age of the plant and equipment.

3. Process operational changes.

4. Maintenance and housekeeping.

Some of the specific in-plant pollution abatement measures which could be adopted are:

1. Segregate discharge lines to reduce the quantity of wastewater to be treated. This includes separate drainage systems for process water, sanitary wastewater, and non-contact water and storm water.

2. Replace old piping and pumping systems with new ones.

3. Instead of simply filling and draining vessels and lines, use a small controlled rinsing with subsequent recycling of the rinse into the product.

4. Where controlled rinsing of tanks is not practical, manual squeegeeing of clingage before rinsing can be practiced.

5. Pipe lines and pumping systems, where the rinse cannot be reworked or recycled, can be blown out with an air or inert gas purge clingage in the final rinse.

6. Recirculate and reuse cleaning water and rinse water by treating the water to remove solids.

7. Implement recovery systems for by-products from the process stream (for example, grease recovery from animal glue manufacturing). Good recovery practices depend on segregated collection systems, proper plant piping systems, good housekeeping and employee awareness.

8. One adhesive plant visited during the survey practiced complete reuse of all contaminated washwater. The plant manufactured urea formaldehyde and phenol formaldehyde resin adhesives and recycled all washwater back into the products. Reuse systems for contaminated wastewaters from other types of adhesive manufacturing should be tried where they are not presently being employed. Important in a complete reuse system is reduction in volume of washwater, which can be achieved through better in-plant practices.

9. The Adhesives and Sealants industry should investigate the applicability of the technology currently used by the Timber Products industry in handling their glue washwater, which achieves zero discharge. This technology has been applied to protein glues, phenolic formaldehyde glues and urea formaldehyde glue. The various in-plant operational and equipment modifications adopted by the Timber Products industry have included:

   a. Some plants wash process vessels several times a day, and some wash only once a week. Less frequent washings can reduce the amount of water to between 10 and 30 percent of the original volume.

   b. The use of steam to clean the process vessels and lines also reduces water usage considerably. This is quite significant since the frequency of washing for protein glue lines cannot be reduced to the same extent as when synthetic resins are used.

c. The use of high pressure water lines and nozzles can reduce the amount of water used.

d. The use of washwater for glue preparation and the reuse of remaining washwater to wash process vessels will reduce wastewater flows. Since part of the washwater is used in the preparation of the glue, a volume of fresh water can be added as final rinse in the washing of the process vessels without increasing water use. A typical recycle system is shown in Figure VIID-1.

Any combination of these modifications can be used to completely recycle the washwater and eliminate discharge from protein, phenol formaldehyde, and urea formaldehyde adhesive manufacturing processes.

End of Pipe Treatment

End-of-pipe treatment and control technology in the Adhesive industry is not extensive. This is due in part to the fact that the water pollution problems in the industry are usually relatively minor when compared to other industries, and to the fact that a very large percentage of the adhesive plants discharge directly to municipal wastewater treatment facilities. The major efforts made by the industry to reduce wastewater discharge have been to reduce the amount of wastewater produced by reuse, conservation of water, and containment of wastewaters that cannot be reused.

Many different methods for disposal of adhesive wastewater are currently in use. Some treatment plants employ some type of settling or holding pond or tank for the removal of suspended solids and, in some cases, floating solids. During the industrial survey, no adhesive plants which conducted complete treatment of their wastewater discharges were found. The only type of treatment observed was physical treatment for suspended solids removal. Therefore, there are no exemplary treatment plants associated with the Adhesive category of the Miscellaneous Chemicals industry with which to determine the Best Practical Control Technology Currently Available (BPCTCA).

Biological treatability studies have been undertaken to determine the feasibility of this method for the treatment of protein, urea, and phenolic glue wastewaters (D-9). It was found that protein and urea glues possessed adequate nutrients for biological treatment, while phenolic glue required supplemental additions of nitrogen and phosphorus. At detention times of 8, 12, and 16 hours, BOD removals of 90 percent and more were achieved at loadings as high as 50 pounds

FIGURE VII D-1

PLYWOOD PLANT GLUE WASHWATER REUSE SYSTEM

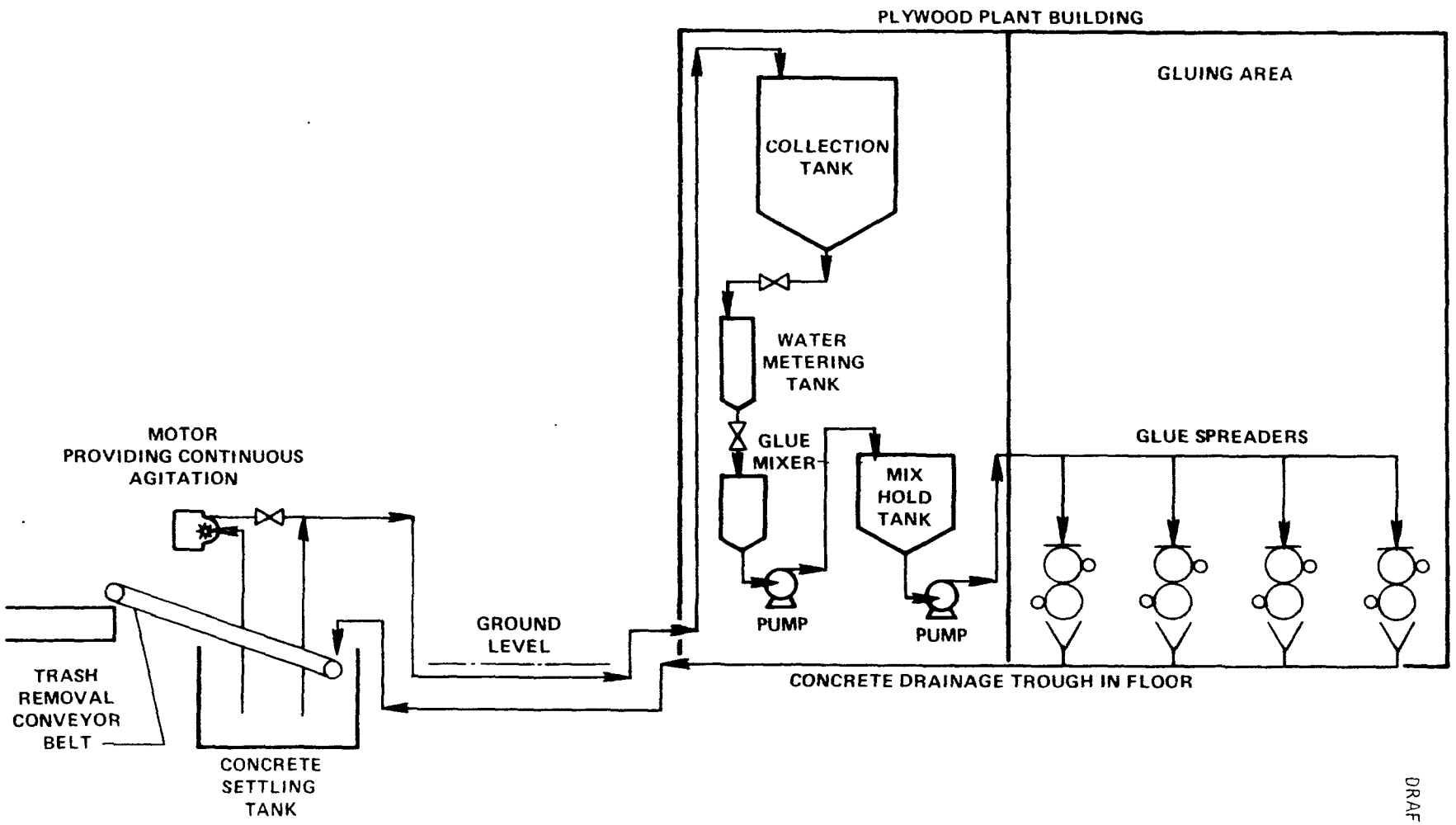

DRAFT

of BOD_5 per 100 pounds of mixed liquor suspended solids for protein glue wastes. Urea glue wastes were more slowly biodegraded and required longer detention times to achieve high degrees of BOD_5 removal.

Physical-chemical treatment studies involving neutralization and settling of protein and phenolic glue wastewaters using alum, sulfuric acid, or hydrochloric acid removed 99 percent or more of the COD and TOC (D-9). However, these good removals were accompanied by the production of large amounts of sludge. Glue solids can be burned at high temperatures producing only small percentages of ash. However, problems involving transportation of the glue waste to the incinerator, injection of the waste into the furnace, air pollution problems, and scaling of burners must be solved before incineration can be an acceptable method of disposal.

Synthetic resins are used extensively in the Adhesive industry for the production of synthetic resin adhesives (subcategories B and C). Wastewater treatment technology for synthetic resins relies heavily upon the use of biological treatment methods. These are supplemented by appropriate initial treatment, especially by pH controls and equalization, to insure that proper conditions are present in the feed to the biological system.

Biochemical-oxygen-demanding pollutants in the wastewaters from this industry are amenable to varying degrees of removal depending upon the usual parameters associated with the specific biochemical oxidation rates of the wastewaters. Table VIID-1 records average BOD_5, COD, and TSS wastewater concentrations found among wastewater treatment plants selected as exemplary of practical technology in the Synthetic Resin industry during the study to establish effluent limitations guidelines and new-source performance standards for that industry (D-11). All the types of synthetic resins listed in Table VIID-1 are used as raw materials in the Adhesives industry for the production of synthetic resin adhesives. Although all 19 of the wastewater treatment plants visited in the synthetic resin study employed biological systems, the treatability of the different wastewaters undoubtedly influenced both the design and established operational modes of practical wastewater treatment systems.

The treatment efficiencies selected as being applicable to subcategory A for the determination of BPCTCA effluent limitations are as follows:

Parameter	Treatment Efficiency Percent
BOD_5	93
COD	93

Similar removals have been observed in pilot studies with similar wastewaters.

The increase in treatment efficiencies selected as being applicable for the determination of BATEA effluent limitations are as follows:

Parameter	Treatment Efficiency Percent
BOD_5	49
COD	49

The increase in treatment efficiencies over BPCTCA selected as being applicable for the determination of BADCT effluent limitations are as follows:

Parameter	Treatment Efficiency Percent
BOD_5	2
COD	4

Many factors govern the selection of treatment processes for a particular industrial wastewater: the ability of the selected system to provide adequate and consistent treatment; the flexibility of the system; and the capital and operating costs of the systems. An economic evaluation was undertaken for the following treatment alternatives, all of which are considered to have great potential in treating this type of wastewater:

1. Biological Treatment
2. Evaporation
3. Liquid Incineration
4. Activated Carbon

Taking both economics and the nature of the wastewater generated by subcategories B and C (which has low, intermittent flow and high concentrations of pollutants) into consideration, the evaporation process was chosen.

The types of wastewaters generated by subcategories B and C have been shown to be amenable to biological treatment with high degrees of removal. However, evaporation proved to be the most economical process for wastewater treatment. Also, the evaporation process would attain higher degrees of BOD_5, COD, and TSS removals

than biological treatment. Due to lack of data on evaporation of this type of wastewater, removals attainable by biological treatment were applied to determine effluent limitations, as shown below:

Parameter	Treatment Efficiency Percent
BOD_5	93
COD	93

These treatment efficiencies should be conservative values when liquid evaporation processes are applied.

E. Explosives Industry

In-Plant Pollution Abatement

A significant amount of pollution abatement can be accomplished in the Explosives industry simply by consistent adherence to good housekeeping practices. Many of the final products such as ANFO and NCN are dry mixed, while others involve only limited water use such as water gels and slurries. Wastes generated from these products are primarily from spills, careless handling, leaks, and washdown of machinery and floors. Such wastes have the potential to be almost completely eliminated by dry cleanup, i.e. procedures involving sweeping and vacuum cleaning.

Process changes to reduce hydraulic loadings do not have much potential in the commercial segment of the Explosives industry but because of high volume have shown promise in the military manufacturing area. In the manufacture of propellents, large quantities of waters are used to transport them safely and to purify the product from one process step to another. For this task, high-quality water is not required. Hence, water reuse with perhaps slight treatment has a tremendous potential to reduce the hydraulic loading. For example, such wastewater reductions for nitrocellulose production in one of the plants visited could reduce total plant discharge by 95 percent and overall propellent area discharge by 87 percent; this change is in the planning stage. (E8)

The production of TNT is another area where significant reduction of hydraulic loading can be attained. As a part of the military modernization program, 100 percent reduction of current process water use is possible and will be implemented within the near future at a large army ammunitions plant. (E4) (E5)

In general, good water management, whose focus is recycling process and cooling water, can have a significant effect on hydraulic loading and would significantly reduce treatment costs. For example at one AAP in the current study, an overall plant water reduction (including cooling as well as process water) reached 6 percent. This saved an estimated $900,000 per year in pumping and treatment costs. Such substantial savings show that water conservation practices can be economical as well ecologically favorable. (E4)

Separation of process and non-contact waters is not practiced universally. This is technically feasible and would greatly reduce the hydraulic loadir to a treatment plant, thereby reducing the cost, and is an essential first step in economical pollution abatement.

Studies documented in Section XV have shown explosive wastes to be treatable with present technology. However, prior to end-of-pipe treatment, certain in-plant control measures will be mandatory.

Such measures are neutralization facilities, catch tanks on finishing explosive lines, and other pretreatment techniques to ensure compatability of raw waste load with the subsequent treatment system.

Treatment and Control Technology

In developing potential treatment technology for each subcategory, sources of information will be laboratory studies, pilot plants, demonstration projects, facilities under construction, and facilities in operation. First, control technology will be discussed from the viewpoint of effluent water quality. After reviewing what has been accomplished and what is feasible, control technology will be designed for each subcategory for BPCTCA, BATEA, and BADCT.

pH

The control technology for pH is neutralization. The pH of a discharge can vary over extreme ranges; from plant visits it was observed to range from 1 to 12. An example of such ranges can be seen from the manufacture of NG, where the initial washing of NG produces an acidic wastewater and subsequent sodium carbonate washings yield an alkaline flow.

The problem of high-alkaline flows is significant in subcategory C, e.g. the discharges from PETN, lead azide, and diazo production. The problems of acidic flows are generally associated with the manufacture of nitric and sulfuric acids as raw materials in the production of explosives. However, as these materials are not explosives they are covered under major inorganic industrial category.

There are many acceptable methods for treating either acidic or alkaline wastes, including: mixing acids and alkaline wastes and the use of chemicals, such as lime, caustic or sulfuric acid to neutralize the wastewaters.

BOD_5 and COD

Current emphasis in treatment technology for both these areas is on biological treatment. Activated sludge lagooning and spray

irrigation are combined at one commercial plant treating propellent wastewater and this treatment technique attains excellent and consistent results. One military installation is currently finalizing the design of biological treatment facilities based on pilot plant test data. (E1)

Solids

High dissolved solid concentrations come from the high nitrate, sulfate and carbonate levels, and these will be addressed separately. Suspended solid generally are low in the Explosives industry. However, catch tanks and sumps are usually employed to catch trace explosives prior to discharge. An exception to low suspended solids in Explosives industry wastewaters is in the manufacture of nitrocellulose. Here, large concentrations of NC fines are present in the waste discharge from the purification process. Treatment technology focuses on sedimentation, dissolved air flotation, flocculation, granular filtration, and centrifugation. Centrifuging has produced excellent results in pilot studies at a military installation and will be implemented shortly. (E-4)

Nitrates

The U. S. Army has investigated several methods for abatement of nitrates. Among these methods are biodenitrification, algae harvesting, ion exchange, and reverse osmosis, distillation, and land application. After initial feasibility studies, the Army selected biodenitrification, ion, exchange, and reverse osmosis as having the most potential. Current engineering emphasis is placed on biological denitrification. At least two plants have plans for design. Pilot plant treatability studies of biodenitrification on nitrocellulose waste have indicated 80 to 90 percent reduction of nitrates on a consisten basis. Influent nitrate values ranged from 600 to 800 mg/L and the detention time was about one day.

Additional engineering studies have been performed utilizing reverse osmosis and ion exchange. Excellent removal rates of 90 percent have been obtained at a pilot plant level using reverse osmosis. Reverse osmosis can be used to treat sulfates as well. At neutral pH, removal rates of 90 to 99 percent for nitrates and sulfates, respectively, were observed during this same pilot investigation. For nitrates it appears that the economical limit of nitrates in the effluent is approximately 20 mg/L as NO_3-N. Hence, reverse osmosis could be a means of nitrate recovery, while an additional step such as biodenitrification may be necessary to reduce the smaller concentration of nitrates to more acceptable levels.

Problems associated with reverse osmosis are acid sensitive membranes and concentrate disposal. (E14). Ion exchange studies have shown wastewater effluent with concentrations as high as 1,200 mg/L to remove 99 percent, resulting in an effluent of 10 mg/L. (E2) (E3) (E4) (E8). Chemicals used for regeneration of the resin are nitric acid and ammonium hydroxide. Ammonium nitrate, a raw material in certain explosives (ANFO, NCN, etc.) can be recovered in the regeneration step.

Sulfates

Present in the water because of the use of sulfuric acid or, in the case of TNT production, the sellite wash (red water), sulfates have only recently received any attention as a pollutant. Hence, abatement studies are only in the initial assessment stages. Existing abatement involves incineration. However, incineration leads to air pollution (SO_x), and the sodium sulfate ash disposed of in landfill causes leaching problems. Several chemical processes are being considered for reusing the ash. The most promising involves a fluidized-bed reduction system which utilizes a reducing gas to liberate hydrogen sulfide from the ash. The hydrogen sulfide can then be used to manufacture sellite and, hence, complete recycling. Additional methods under consideration for controlling high sulfate discharge are reverse osmosis, ion exchange, evaporation (combined with reverse osmosis to reuse sulfuric acid), and calcination (precipitation with lime then heating to recover sulfuric acid and lime).

Reverse osmosis has been investigated at the pilot scale, in combination with nitrate removal. High sulfate removal efficiences (99 percent or better) are reported even at acidic pH. However, membrane hydrolysis at low pH greatly decreases useful membrane life. In the absence of more resistant membranes, neutralization would likely be required for the reverse osmosis feed stream. This may result in precipitation and fouling of the membranes by solids. (E-11)

The most technically feasible method of sulfate treatment appears to be calcination. However, the solubility of calcium sulfate is high (approximately 470 mg/L of sulfate), and lime treatment may not be feasible for more stringent effluent requirements. The use of barium to precipitate sulfate has been suggested in the literature, but cost and the possiblity of exceeding effluent barium levels appear to be major disadvantages. (E11) The economic and technical difficulties associated with treatment for pollutants such as sulfate have led to several applications of waste disposal by land irrigation in the Explosives industry. One such plant that goes through biological activated sludge, lagooning and spray irrigation is presented achieving 95 percent removal of sulfates. (Historical Data)

Trace Quantities of Explosives

Unique pollutants such as NG, TNT, and RDX can be hazardous and toxic. (12)

Nitroglycerin (NG)

Treatment technology universally used for NG washwaters is catch tanks. The catch tanks make it possible to recover by sedimentation any NG that comes out of solution. However, this leaves the supernatant waters at their saturation point upon discharge. At room temperature, 20°C, the solubility of NG is recorded as 1,800 mg/L. (See Table VIIE-1.) Therefore, during warm summer weather without further treatment, NG wastewater could pose a safety problem, especially if discharged into a cool mountain stream. If cooling water is available, the cooling of NG prior to discharge could recover additional product and decrease the waste load significantly.

Additional technology for the treatment of wastes high in nitroglycerin is only in the experimental stage. NG wastes containing 900 to 2,100 mg/L have been shown to be amenable to activated sludge treatment. In one study, Koziorowski and Kucharski report consistent success in treatment of influent wastes containing 400 to 500 mg/L of NG at a detention time of 16 hours. (E14) It has been demonstrated by Koziorowski and Kucharski that NG can also be destroyed by quicklime. (E14) Lime (up to 200 mg/L) was added to the wastewater and allowed to react for three days; the result was a non-explosive sludge, but the effluent was highly alkaline. (E11) The Army has conducted experiments on the treatability of NG by biological, physical/chemical, and ozonation methods. With wastewater containing concentrations of NG and DNG (dinitroglycerin) of 1,500 mg/L and 850 mg/L, respectively, the results show that NG can be treated biologically and chemically, although with varying degrees of success. It is generally considered that NG waste be handled biologically together with other plant waste. (E11)

TNT

TNT has been shown to interfere with biochemical oxygen demand, and implies an inhibiting or toxic effect. Klausmeier has confirmed this inhibiting, but not toxic, effect on soil microorganisms. (E21) Biological treatment of wastes high in TNT and DNT (red and pink water) was performed by the Navy (1972). Reduction has been successful only in the laboratory using specific cultures and nutrients. At Crane Naval Ammunition Center, treatability studies using activated sludge proved unsuccessful. Numerous other treatability studies at Crane Naval Ammunition Center included activated carbon, aerated lagoon, trickling filtration, and physical/chemical mechanisms. Of these, activated carbon adsorption process

Table VIIE-1

Summary of Treatment Investigations
Explosives Industry

Type of Study	Reference	Treatment	Percent Reduction BOD	COD	TOC	TKN	NO_3	SO_4	TSS
Pilot (3 months)	U.S. Army (PE249)	Activated Sludge (NG Waste)	86.7	78.3					
Operational	Operational	Activated Sludge (Propellant Waste)	92.8 [1]	71.5 [1]	90 [2]	Increase	96 [2]	None	88.4 [1,2]
Laboratory	Clark, Dietz Eng. Rept. HAAP	(Explosive Waste) Activated Sludge	Failed -(Filamentous Organism)						
Laboratory	Clark, Dietz Eng. Rept. HAAP	Trickling Filters	83.7	72.9					
Laboratory	Clark, Dietz Eng Rept HAAP	Fixed Film Denitrofication	41 4				94.9		
Laboratory	Clark, Dietz Eng. Rept. HAAP	Dual Media Filtration							75
Laboratory	Clark, Dietz Eng. Rept.	A.C.-Note Removes all explosives down to 0.0 mg/L		77.6					
Operational	Operational	(Propellant waste(Lagoon Sp. Irr	72.0 [1]	78.9 [1]	88.7 [2]	96.6 [2]	increase	59.4 [1]	77.8 [2]
Laboratory	U.S.Army PE 249 Phase II	(NG Waste) Decompose NG & DNG by Na_2S	(Successful in Decomposing 350 mg/L NG & 130 mg/L DNG)						
	U.S. Army PE 249 Phase II	Using Lime	Successful Decomposition						
	U.S. Army PE 249 Phase II	Oxidating Agent Ozone NG DNG		20 100					
Laboratory	U.S Army PE 249 Phase II	(Propellant Wastes) Activated Carbon	Excellent Removal of Dissolved Organics						
		Inorganic SO_4						97.5	
Pilot	U S. Army PE 249 Phase II	NC Fines Separation & Centrifuge							99
Laboratory Demonstration	U.S. Army PE 249 Phase II	Reverse Osmosis					75	99	
Lab Unit (Pilot)	U.S.Army PE 249 Phase II	Biodenitrification					70-90		

Table VIIE-1
(Continued)

Type of Study	Reference	Treatment	BOD	COD	TOC	TKN	NO_3	SO_4	TSS
			Percent Reduction						
Pilot	Pollution Abatement Review Aug. 1973	Reverse Osmosis Treatment of Red. Water		Impractical Due To High Pressure					
Operation	Pollution Abatement Review Aug. 1973	(Pinkwater) Activated Carbon (Reduction of TNT 99.5%)		95	91.5-92.7			None	67
Operation	Pollution Abatement Review Aug. 1973	(Pinkwater) Activated Carbon	-Data not available-						
Pilot and Laboratory	Harris, 1973	Biodenitrification					70-97		
Commercial Demonstration	Pollution Abatement Review Aug. 1973	Ion Exchange					90-99		
Laboratory	Pollution Abatement Review Aug. 1973	Reverse Osmosis					90		
Laboratory	Harris, 1973	Biodenitrification					95-99		
Pilot	Harris, 1973	Ion Exchange Countercurrent					98.8	95.4	
Laboratory	Harris, 1973	Reverse Osmosis					90	95	
Laboratory Treatability and Pilot	Harris, 1973	Calcium ppt of sulfate waste						successful	
Laboratory Tests	Harris, 1973	AC adsorption	Regeneration of carbon is feasible						
Bench Scale Pilot Plants	U.S. Navy 1972	TNT wastes							
		Activated Sludge		Not successful					
		Aerated Lagoon		Not successful					
		Trickling Filter		Not successful					
		Chemical Precipitation		Not Successful					
		Activated Carbon		98					

[1]Data
[2]Survey Data

was recommended. Spent carbon from the adsorption column cannot be regenerated at the present time and must be incinerated or landfilled. (E13)

The Army has reached a similar conclusion regarding TNT. In tests of reverse osmosis, ozonolysis, and activated carbon, only the latter proved effective, reducing initial concentrations of TNT in the range of 100 mg/L down to 0.05 mg/L. The Army recommended development work in the regeneration of carbon, because it is uneconomical at present. A promising method involves dissolving the TNT in toluene then crystalling it by a drop in temperature and filtration to separate the carbon. (E15)

If regeneration of carbon cannot be achieved, the incineration of the spent carbon is necessary. However, incineration, though inactivating TNT and its derivatives, produces a waste high in sulfates (from the sellite purification process resulting in red and pink water). This ash causes a major solid waste disposal. In addition, leachate from its storage can cause ground-water contamination. (E5) Reclamation of this ash is being investigated by the Army. A fluid-bed reduction system is being tested presently with the focus of regenerating selite.

RDX and HMX

The present removal of RDX and HMX from wastewaters by catch basins has only partially alleviated the problem. The army has investigated the following treatment methods at Holsten AAP reverse osmosis, activated carbon adsorption, polymeric column adsorption, and biological treatment. These treatment techniques are presently being studied. Hence, a definite statement as to their success cannot be drawn. However, one conclusion can be drawn; biological treatment is feasible and will break down as much as 99 percent of the explosives present. (E15)

End-of-Pipe Treatment

Due to the lack of effective treatment in all but exceptional cases in the Explosives industry, treatment sytems will be proposed for all subcategories based on the preceding discussion of laboratory studies, pilot plant investigations, demonstrated projects, facilities designed, facilities under construction, and facilities in operation.

Treatment systems were developed for the Explosives industrial subcategories for the following levels of treatment technology:

1. Best Practicable Control Technology Currently Available (BPCTCA).

2. Best Available Technology Economically Achievable (BATEA).
3. Best Available Demonstrated Control Technology (BADCT).

It should be noted that the treatment systems presented for each level of technology are not the only systems that are capable of meeting the effluent limitations prescribed. Moreover, within each subcategory there may be exceptions to the suggested level of treatment due to unforeseen complications. The objective of this section is not to prescribe but to suggest feasible treatment systems that will satisfy the effluent limitations guidelines developed in this report.

BPCTCA Treatment System

Of the six plants visited during the survey, only one operated a treatment system other than neutralization and sedimentation. Therefore, the levels of treatment for BPCTCA will be based on the performance of this existing activated sludge plant. Laboratory and pilot plant investigations summarized in Table VIIE-1 will be used to verify these levels of treatment.

The results of nine months of data for this activated sludge treatment system is shown in the summary tabulation below. It should be noted that this treatment system was designed for a propellant waste having typical waste characteristics as indicated in Section V. The BPCTCA treatment level indicated below includes the survey data as well as historical data.

BPCTCA Treatment Level

Parameter	Percent Reduction of RWL
BOD_5	93[1]
COD	72[1]
TOC	90[2]
TSS	88[2,3]

[1]Based on historical data
[2]Based on 24-hour composites from survey
[3]Except average concentration not to exceed 50 mg/L.

Pretreatment Requirements for BPCTCA Treatment System

Certain waste flows will have to be pretreated prior to discharging to a central treatment facility such as the one proposed for BPCTCA. The following problem wastewaters should be considered in that category:

1. Discharges high in sulfate
2. Discharges high in TNT (red water, yellow water, pink water).
3. Discharges high in NC fines
4. Heavy metals

Since no proof has been shown that pretreatment is absolutely necessary, design and cost estimates will not be attempted. Instead, suggested methods of abatement will be explored.

High sulfate concentration can disrupt a biological secondary treatment system. Therefore, the removal of high sulfate concentration by calcination may be a necessary pretreatment technique. TNT is suspected of being toxic or an inhibitor of biological processes. Wastes high in TNT may, therefore, require activated carbon adsorption prior to discharge to a biological system to remove the dissolved explosive and its isomers. High concentrations of NC suspended solids could also disrupt a biological system. Removal by the use of centrifuging has been shown to be economical.

Heavy metals concentration can be toxic to microorganisms and, subsequently, disrupt the activated sludge process. If heavy metals are a problem, some means of physical-chemical pretreatment will necessarily have to be implemented.

BATEA Treatment System

Out of six explosives plants visited, only one had any kind of treatment that could be considered as exemplary. Hence, operational performance data from this facility was used to establish BATEA treatment levels; these levels was verified by laboratory and pilot studies.

BATEA Treatment Levels

Parameter	Percent Reduction of BPCTCA Waste Effluent
BOD_5	72
COD	79
TSS	78[1]

[1] Except average concentration not to exceed 20 mg/L.

This percent reduction is based on lagooning and spray irrigation as a treatment system. However, a system specifically designed to remove dissolved and suspended explosive organics would be preferable. Therefore, a system using activated carbon has been recommended for BATEA. Laboratory and pilot plant investigations in the area of activated carbon (indicated in Table VIIE-1) have shown it to attain comparable percentages of removal.

BADCT Treatment Systems

Not enough information could be gathered to quantify BADCT from process changes in the Explosive industry. Therefore, any recommendations made must be based on general experience in related industries. However, new explosive plants initiating production between now and 1983 should attain a level of treatment somewhere between BPCTCA and BATEA. It is recommended that dual-media filtration be used as an additional step after BPCTCA to comply with BADCT.

On the basis of information derived from the contractor's previous experience and EPA publications, the following percent reductions are considered reasonable using dual-media filtration:

BADCT Effluent Reductions

Parameter	Percent Reduction of BPCTCA Effluent
BOD_5	8.0
COD	13.0
TSS	60.0

F. Carbon Black Industry

In-Plant Pollution Abatement

The elimination or reduction of in-plant pollution sources depends upon any one or a combination of the following factors:

1. New plant process selection to minimize pollution. Present corporate environmental awareness requires that the new environmental impact of products and processes be evaluated.

2. The modification of process equipment to improve product recovery or to minimize pollution.

3. Maintenance and good housekeeping practices to minimize pollution. The competitive nature of the industry requires that most producers operate their plants in the most efficient manner possible. This necessitates good maintenance and housekeeping practices. However, there are segments of the industry who have minimized maintenance expenditures and whose management does not adequately fund their environmental control staff nor support them in their efforts to enforce rigid housekeeping regulations.

4. The age of the plant and process equipment as it impacts on pollution. Poorly maintained process equipment does not warrant consideration of its age. The real problem is that older equipment generally pollutes more than new equipment. An example of the impact of new technology on the Carbon Black industry is the use of bag filters for carbon black recovery, accepted as state-of-the-art technology. In the past, cyclones and wet scrubbers were used, which generate larger quantities of wastewaters.

   In addition, older plant layouts do not allow for pollution control and, in many cases, prohibit segregation of storm and process waters.

End-of-Pipe Treatment

A summary of the types of treatment technology which were observed during the field visits are listed in Table VIIF-1. Performance data for these treatment plants were rather scarce.

Table VIIF-1

Treatment Technology Survey
Carbon Black Industry

Plant	Subcategory	Treatment Technology
81	A	Settling/Evaporation (no discharge)
82	A	Settling Basin, Gravity Filtration
83	B	Evaporation/Settling Ponds

It is important to note that the treatment technology applied to subcategory A was not for process contact sources. Rather, the technology was applied to treatment of stormwater runoff, utility water and in some instances sanitary wastes (including shower facilities).

Plant 81 collected stormwater runoff from their property and from adjoining property for use as quench water in their process. Also, they were implementing a program to include their sanitary wastewater within this treatment system.

Plant 82 treated miscellaneous utility discharges and stormwater runoff by gravity settling followed by gravity filtration. At the time of the plant visit, little discharge was observed. Again, this system did not treat any process contact water. Plant 83 was a thermal black plant. All process contact waters (from the dehumidifier system) were collected in approximately seven acres of evaporation/settling ponds. No discharge occurred from this system due to the high net evaporation for the area. The sanitary wastes (including shower water) were also collected by this system.

Gravity Settling and/or Gravity Filtration

During the plant survey program, historic wastewater treatment plant performance data were obtained when available. Table VIIF-2 is a summary of average treatment results attained by the plants surveyed. The number of data points available were not statistically significant. The information in Table VIIF-2 indicates only the relative effectiveness of the applied treatment technology.

Table VIIF-2

Wastewater Treatment Plant Performance Data
Carbon Black Industry

Plant Number	Subcategory	Flow Rate, gpm		Effluent TSS, mg/L	
		Average	Range	Avg., mg/L	Range
82	A	18	12-26	12	6-19
83	B	900[1]	-	124[2]	-

[1]The recirculated rate, no discharge occurs from these ponds.
[2]Represents a single sample taken from the pond effluent.

It must be emphasized that the data presented above is significant only in that it illustrates the possible performance of applied treatment technology. Both plants received wastewater from many different sources, including sanitary wastewater, utilities and stormwater. These data do not represent the application of these technology to process contact streams.

BPCTCA Treatment Systems

Historical treatment plant data was reviewed to quantify BPCTCA reduction factors, which could then be applied to BPCTCA raw waste load figures for each subcategory to generate recommended effluent limitation guidelines. Based on the previous discussions of treatment technologv, it is recommended that the following pollutant reduction factors be consistent with BPCTCA treatment technology:

TSS - 40 percent reduction of RWL

BPCTCA effluent discharge recommendations will be made only for TSS.

A minimum concentration figure would be used when the calculated TSS concentration was less than the minimum concentration limitation, as the following example shows:

Subcategory	BPCTCA Effluent Limitations (kg TSS/kkg)	Min. TSS BPCTCA Concentration (mg/L)
B	0.053	75

In subcategory B, the effluent TSS-BPCTCA effluent limitation is 0.053 kg TSS/kkg product. When applied to actual plant flow RWL data, the calculated TSS concentration would be 50 mg/L. In this case, the minimum TSS concentration of 75 mg/L would apply and the BPCTCA effluent limitation would be recomputed this concentration. The new TSS effluent limitation would be 0.105 kg/kkg.

BATEA Treatment Systems

Waste reduction factors commensurate with BATEA treatment technology have been formulated as follows:

Parameter	Reduction Factors Applied to BPCTCA Effluent Limitation (percent)	Minimum Monthly Average Effluent Concentration (mg/L)
TSS	60	30

BADCT Treatment Systems

Waste reduction factors commensurate with BADCT treatment technology have been formulated as follows:

Parameter	Reduction Factors Applied to BPCTCA Effluent Limitation (percent)	Minimum Monthly Average Effluent Concentration (mg/L)
TSS	60	30

G. Photographic Processing Industry

In-Plant Pollution Abatement

Regeneration and Reuse

Present state-of-the-art techniques can effectively reduce most of the problems associated with photo-processing effluent loads (G-9). The most advantageous system, both environmentally and economically, is the regeneration and reuse of solutions.

Silver Recovery

Basically there are three methods of recovering silver from photographic processing solutions: metallic replacement, electrolytic plating, and chemical precipitation. These methods can be used singly or in combination, depending on which is most suitable for the particular needs of the user. These three methods are examined in detail.

Metallic Replacement

Metallic replacement occurs when a metal, such as iron, comes in contact with a solution containing dissolved ions of a less active metal, such as silver. The dissolved silver, which is present in the form of a thiosulfate complex, reacts with solid metal (iron); the more active metal (iron) goes into solution as an ion, and an ion of the less active metal becomes solid metal (silver).

Silver ions will displace ions of many of the common metals from their solid state. Zinc or iron can be used to recover silver from fixes. Because of its economy and convenience, steel wool is the form of metal used most often. Furthermore, the zinc that would be carried into the drain is potentially a pollutant. Its use, therefore, is not generally considered acceptable from an environmental standpoint.

The acidity of the fix is an important factor when using steel wool in the recovery of silver. Below a pH of 4, the dissolution of the steel wool is too rapid. Above a pH of 6.5, the replacement reaction may be so slow that an excessive amount of silver may be lost because of the long reaction time required to recover the silver. Silver loss in this case will depend on the flow rate through the cartridge.

Silver recovery by metallic replacement is most often carried out using commercially available cartridges consisting of a sealed plastic bucket containing steel wool. The fixer that comes out of a steel wool cartridge will usually contain less than 50 mg/L silver. Common practice is to replace the cartridge when the silver reaches 1,000 mg/L, as shown on a silver test paper. With careful maintenance, 90% or more of the silver in the fixer can be recovered.

Electrolytic Recovery

In the electrolytic method of recovery, silver is removed from fixing baths by passing a controlled, direct electrical current between two electrodes (cathode and anode) suspended in the fixer solution. Silver is deposited on the cathode in the form of nearly pure silver plate. The cathodes are removed periodically, and the silver is stripped off.

Electrolytic systems can be installed in two basic ways. One is to de-silver the fixer overflow from a processing machine as it flows to the sewer. The system can be operated for either a batch or a continuous-flow cell. Another method is to remove silver from the fixer in a continuously recirculating in-line system at approximately the rate at which silver is being added by processing. The latter procedure has the advantage of maintaining a low silver concentration in the processing bath so that the amount of silver carried out with the fixer into the wash tanks is minimal. A modification of the circulating system is to collect fixer overflowing from several processing machines, deliver it in a separate electrolytic system, and then reconstitute the de-silvered fixer to supply the processing equipment again where recommended by the manufacturer.

In-line electrolytic silver recovery can maintain the silver concentration in a recirculated fixer system between 500 mg/L and 1,000 mg/L. When used as a tailing or terminal treatment, a silver concentration of 10 mg/L to 20 mg/L can be achieved.

Sulfide Precipitation

Silver may be precipitated from fixers and their washes with sodium sulfide. The precipitation is quantitative in an alkaline solution, and the resultant silver sulfide is one of the most insoluble substances known. It has a solubility product of about 10^{-50}. The physical characteristics are not as favorable as the chemical characteristics. Silver sulfide tends to form colloidal suspensions. Its very small particle size makes filtration difficult, and the filter cake produced is extremely dense. Diatomaceous earth filter aid can be used to improve filtration. About three grams of filter aid are required for each gram of silver if a conventional filter press is used.

With sulfide precipitation it is possible to remove virtually all the silver from both the fixer and the wash following the fixer. Tests on experimental equipment have given results of less than 0.5 mg/L. The actual concentration usually depends on the efficiency of the filtering or settling step. Any silver lost is in the form of insoluble silver sulfide particles.

There is no commercially available equipment designed to apply to most processing situations; however, equipment is available for application to smaller-volume graphic arts applications, and it is within the present state-of-the-art to produce sulfide precipitation and filtration equipment.

Regeneration of Ferricyanide Bleach

The basis for all the regeneration methods is the use of a sufficiently strong oxidizing agent that has reaction products compatible with or used in the process. Since bromide is required in the bleach formula, bromate, bromite, and elemental bromine have been used. Persulfate can be used because some sulfate can be tolerated. Ozone, hydrogen peroxide and electrolytic oxidation have also been used because they leave no chemical by-products.

Persulfate Regeneration

In actual practice, persulfate is most widely used. This technique has the advantages of being simple to use, involving no significant capital expenditure, and requiring only comparatively safe and stable chemicals. However, regeneration of a bleach with persulfate results in a build-up of the sulfate ion that slows the rate of bleaching. The build-up of sulfate is higher in bleaches for reversal products because of the comparatively large amounts of persulfate used in the regeneration process. In some processes, especially if squeegees are used to minimize water carry-in, the sulfate build-up may require the sewering of up to 10 percent of the bleach for each regeneration cycle in order to maintain adequate bleaching.

Ozone Regeneration

This process is characterized by the following reaction:

$$2Fe(CN)_6^{-4} + H_2O + O_3 \longrightarrow 2Fe(CN)_6^{-3} + 2(OH)^{-1} + O_2$$

The pH of the bleach increases as the reaction proceeds; consequently, it is necessary to add acid. Bromide is required in the bleaching process; the use of hydrobromic acid, therefore, furnishes both the bromide and the hydrogen ion. Theoretically, one bromide ion is required for each ferrocyanide ion that is oxidized to ferricyanide. The hydrobromic acid avoids all build-up of sulfate and other unwanted products. If in practice there is a slight build-up of bromide ion, a small amount of sulfuric acid could be added without danger of high sulfate build-up. Likewise, slight pH adjustments could be made with sulfuric acid.

Developer Recovery

Developers become exhausted both by loss of active developing agents and by increase of reaction products. The limiting factor is usually the increased bromide concentration. Two approaches may be taken to reuse developers: 1) the reaction products can be removed so that the bulk of the solution may be reused; or 2) specific chemicals can be separated from the bulk of the solution and reused with or without further purification.

Ion Exchange

The ion exchange generally can give a greater reduction in chemical usage. As an example, bromide and developer decomposition products can be removed by ion exchange from Eastman Color Developers; other constituents are not affected. After passing through the column, the developer is reconstituted to replenisher strength and is reused. This method requires additional analytical work for regeneration of the resin.

Precipitation and Extraction

The recovery of specific chemicals may not have as great an effect on reduced chemical usage as the removal of bromide by ion exchange, but significant cost savings can be realized and certain non-biodegradable organics can be removed. The most widely practiced application is the recovery of couplers from the various color developers in the process for Kodachrome film. The couplers are soluble in an alkaline solution but precipitate at a neutral or acid pH.

It is common practice to use CO_2 to adjust the solution to pH 7 and then remove the precipitated coupler by centrifuging. The coupler is dried, assayed, and sometimes repurified.

Developing agents can be extracted with organic solvents using conventional liquid-liquid- extraction techniques. One problem is that unwanted substances are also extracted, often making the chemical analysis of the extract difficult. This technique is not in use at the present time and is being considered only for possible use in the event of shortages of certain chemicals.

Some of the difficulties with developer reuse are: chemical analysis is needed; suitably scaled equipment is difficult to find; a higher degree of operator skill is required; and these operations are not always economically attractive.

Use of Squeegees

Effluent loads can also be minimized in the photographic process by the correct use of mechanical aids (such as squeegees), which generally inhibit the carry-over from one tank to the next (G-10).

There are four general locations for squeegee action in the photographic process:

1. After the photographic solution but prior to a wash
2. After a wash but prior to a photographic solution
3. Between two photographic solutions
4. After a wash but prior to drying

Generally, a squeegee following a photographic solution will have relatively little effect on the replenishment rate of that solution. An exception to this would be the first solution in the sequence, such as a developer or prehardener. The first solution is usually alkaline and causes a considerable swelling of the gelatin; consequently, large amounts of chemicals are imbibed in the swollen emulsion. Solution removed in this manner is not replaced by carry-over from any previous solution. The squeegee action here will retain most of the solution on the surfaces of the film, thus possibly reducing the replenishment rate. The advantage of the squeegee in this situation, however, is not only to reduce the replenishment rate, but rather to increase chemical recovery. The squeegee prevents the processing solution from being transported by the film to the wash water which is generally discarded. Instead it allows more of the solution to overflow where it is collected and ultimately reused or treated to remove unwanted materials.

The squeegee following a wash, like the processing solution discussed, will have little affect on the wash itself. Again, the water must go somewhere and if the squeegee removes it from the film, the resulting build-up of water will simply go out the overflow if the wash rates are not reduced accordingly. The important effect of the squeegee in this instance is evident by a reduction in replenishment in the next bath caused by the reduction in dilution water. The reduction of dilution water results in higher concentration in the bath, which generally means both a cost savings to the processor and fewer chemical pollutants going to the sewer.

Careful study is required when considering a squeegee between two photographic solutions. There may be some interdependence between the two chemical baths that was designed into the process. By placing a squeegee between them, the equilibrium could be upset, thus reducing the effectiveness of the process.

Use of Holding Tanks

Large-scale processors operate on a continuously replenished system, not in batches. Normal operations require no dumping of solutions. However, because of an emergency, periodic shutdown, contamination, or exhaustion of solutions, occasional disposal of a processing solution may be necessary. If this is suddenly "dumped", it may shock load or overload wastewater treatment facilities. This situation can be avoided by a controlled discharge of the solution. A holding tank large enough to hold the total volume of solution that might be reasonably expected to be dumped at any one time is used, and the solution in the holding tank is bled slowly to the waste water sewer taking advantage of the dilute wastewaters.

End-of-Pipe-Treatment

Biological Treatment

Large-Scale Activated Sludge

An activated-sludge pilot unit is being operated on photographic processing wastes (G-4). The extended aeration unit has a capacity of 20,000 gpd and was chosen for its high potential for BOD_5 reduction and its low solids production. The processing wastes fed to the extended-aeration plant were collected from nine processing machines. These wastes which varied over a period of years, included effluents from Ektaprint R, Ektaprint C, Ektaprint 3 chemicals, and from the E-4, C-22, CRI-I, and K-12 processes. The effluents from the machine flows were collected and pumped to two 1,000-gallon fiberglass holding tanks. These were used to smooth out surges and to provide a constant source of feed for the treatment plant and insure a constant flow to the system.

During the first year of operation BOD_5 reductions were low, because of a combination of hydraulic overloading and poor sludge settling characteristics, which caused high suspended solids in the effluent. As a result, the MLSS content in the aeration tank was low. This was remedied by the installation of sand filters to increase MLSS by recycling the backwash wastewater into the aeration tank. After the sand filters were put into operation, BOD reduction immediately improved. Simultaneously, the food to microorganisms ratio decreased because of the MLSS increase.

Lagoons

Lagooning and ponding are popular methods for treating industrial and municipal wastes. However, a significant amount of acreage is required for satisfactory treatment, and the degree of treatment is often unpredictable because the process is very dependent upon the weather. The use of surface mechanical aeration equipment or of diffused aeration (i.e. aerated lagoons) has helped lagoons become an economical alternative in biological waste treatment of industrial wastes.

Several processing laboratories have used lagoons for treating their photographic processing effluent. The overall BOD_5 reductions ranged from 30% to 90% depending upon the loading and the use of supplemental aeration.

Physical/Chemical Treatment

Ozonation

Biological treatment experiments have shown that the photographic chemicals used in the largest quantity (such as thiosulfate, acetate, sulfite, hydroquinone, and benzyl alcohol) respond well to biological treatment. However, a small percentage of chemicals (such as color-developing agents and EDTA) appear to be biodegraded only slowly or not at all. Consequently, ozonation, a non-biological waste treatment system, has been tested to evaluate the treatability of such chemicals.

The results of these experiments are summarized in Table VIIG-1 (G-11). Only acetate and glycine were found to be untreatable, and ethylene glycol, methanol, ferricyanide, and ethylene diamine marginally treatable; the other chemicals are considered treatable. However, the degree of completion of the degrading by ozonation is subject to variation and is not fully substantiated.

The suggested uses of ozone are: 1) as a preliminary treatment for overflow color developer solution; 2) as a preliminary treatment for solutions that may contain substantial amounts of thiocyanate, formate, EDTA, or black-and-white developing agents (other than hydroquinone); and 3) as a means of tertiary treatment and disinfection for an overall mixed waste, after that waste has first been treated biologically.

Activated Carbon Adsorption

The feasibility of treating various photographic processing chemicals and solutions by activated carbon is summarized in Table VIIG-2.

As with ozonation, more of the photographic processing chemicals are treatable than are untreatable, but the group of untreatable or marginally treatable chemicals is more significant than with ozonation.

Table VIIG-I

Summation of Ozonation Results (G-II)
Photographic Processing Industry

Treatable Chemicals	Untreatable Chemicals
HAS	Glycine
Benzyl Alcohol	Acetate ion
Color Developing Agent	
Thiosulfate	
Sulfate	
Hydroquinone	
Kodak Elon Developing Agent	
Phenidone	
EDTA	
Ferric EDTA	**Marginally Treatable Chemicals**
Formate Ion	
Formalin	
Maleic Acid	Ethylene Glycol
Eastman Color Print Effluent	Methanol
Ektaprint 3 Effluent	Ferricyanide
Flexicolor Effluent	Ethylene Diamine
Synthetic Effluent from Combined	Ektachrome ME-4

Table VIIG-2

Feasibility of Treating Photographic Processing Chemicals with Activated Carbon (G-II)
Photographic Processing Industry

Treatable Solutions	Non-Treatable Solutions
Ektaprint 3 Mixed Effluent	Citrizinic Acid
Ektaprint R Color Developer	HAS
Color Developers	$Na_2S_2O_3 \cdot 5H_2O$
CD-1, CD-2, CD-3, CD-4	Ethylene Glycol
Anti-Calcium No. 3	Potassium Oxalate
Elon	Ferricyanide
Phenidone	
Citric Acid	**Marginally-Treatable Solutions**
Benzyl Alcohol	Ethylene Diamine
Hydroquinone	Formic Acid
$Na_4EDTA \cdot 2H_2O$	Acetic Acid
$NH_4FeEDTA$	Overall Photographic

Chemical Precipitation

Precipitation can be used effectively for the removal of ferrocyanide and ferricyanide from photo processing wastewaters. These complex ions can be precipitated by using iron salts; ferrous sulfate has proved to be an economical and effective precipitant.

When employing precipitation for removal of ferri-ferrocyanide, four items must be considered: equalization, chemical feed system, clarification, and solids handling and disposal. The purpose of equalization is to minimize the peaks in flow and concentration so that the treatment system can be designed to provide reliable and consistent results. The chemical feed system adds the precipitation chemicals in the proper quantity at the proper point. (Ferrous sulfate dosage in the range of 250-500 mg/L with pH of about 8.5 or greater have been reported to give good results (G-II). The precipitated materials may be removed in a clarifier.

The advantages of the precipitation technique for ferri-ferrocyanide over other forms of destruction or removal are: 1) Precipitation occurs instantaneously, and the system thus requires less reaction tank capacity per unit volume of wastes; 2) precipitation removes virtually all of the ferri-ferrocyanide; 3) hour-to-hour fluctuations in concentration of the waste do not significally change the operating characteristics; and 4) the process works equally well with a variable influent since only the ferri-ferrocyanide in the system reacts with iron. Disposal of the ferrocyanide sludges presents some problems, but the studies to date are inconclusive as regards the relative hazards of the various disposal methods.

Reverse Osmosis

The major chemicals used in photo processing have been tested to find the degree to which they are stopped by a cellulose acetate membrane under reverse-osmosis conditions (G-II). Water, hydroquinone, and alcohol passed through the membrane easily, but halides and the complex inorganic ions found in fixing baths and bleaches were easily stopped. Recent studies have confirmed that fixer wash water is easily separated into two streams, one containing the concentrated salts and the other stream nearly pure water. Thus, it is possible to return the fixer concentrate or the bleach concentrate to the mix area for reuse in building a new replenisher. The fixer concentrate contains virtually all of the silver complex that was in the wash water, and it is now practical to remove electrolytically.

H. Hospitals

In general, hospital wastes can be readily treated by biological treatment systems. Although potential does exist for discharge of biologically inhibiting substances, the industry survey indicates that the discharge of such substances (such as mercury or silver) is not general practice. Such substances are usually collected at the source rather than discharged.

Relatively few hospitals within the United States treat their own treatment. Most hospitals are located in areas of high population density, and consequently, it is more convenient for them to discharge their wastes to municipal treatment systems. However, the small number of hospitals located in remote areas must treat their own wastes. Among these hospitals the most prevalent end-of-pipe wastewater treatment system is the trickling filter plant; however, some activated sludge systems do exist, as shown in Table VIIH-1.

In-House Pollution Abatement

During the survey the two most exemplary practiced pollution control measures observed within hospitals were elimination of mercury discharge and recovery of silver from spent X-ray developer. One hospital in particular has gone so far as to institute a "no mercury discharge" policy. Used chemical compounds or solutions containing mercury are collected in special containers rather than discarded in a sink. When a sufficient quantity has been collected the mercury waste is then disposed of by a private disposal contractor.

Recovery of silver from spent X-ray developer is practiced at all hospitals visited during the survey. Larger hospitals processing a large number of X-rays performed the silver recovery on-site, whereas smaller hospitals drummed their spent developing solutions and returned them to the manufacturer.

Although many hospitals have active programs aimed at preventing the discharge of volatile solvents and/or toxic chemicals to sinks and drains, some are totally unaware of the potential water pollution problems associated with such practices. In fact, one hospital was not even aware of the potential fire hazard associated with discarding volatile solvents into sinks. Restrictions on the discharge of such substances should be an integral part of a hospital's operating procedure.

End-of-Pipe Control Technology

Table VIIH-1 indicates the types of wastewater treatment technology observed during the survey and the treatment systems identified but

not observed. As discussed previously, most hospitals discharge their wastes to municipal treatment systems. Those hospitals that treat their wastes generally use trickling filter systems. Activated sludge systems are in use at several hospitals and aerated lagoons are utilized by another hospital.

Table VIIH-1

Treatment Technology Survey
Hospitals

Type of Treatment	Number Observed	Number Identified But Not Observed
Activated Sludge	1 (No. 93)	1
Trickling Filters	0	11
Aerated Lagoons	0	1

During the survey program, historical wastewater treatment plant performance data were obtained when possible. The historical data were analyzed statistically, and the performance of individual plants was evaluated. The results of those analyses are presented in Figures VIIH-1 through VIIH-8. A summary of the statistical analyses for two of the hospitals is presented in Table VIIH-2. The amount of analytical data used in the statistical analyses is indicated in the "data base" column of Table VIIH-2, and the removal efficiencies and effluent concentrations shown correspond to 90, 50, and 10 percent probability of occurrence.

During the survey program, 24-hour composite samples over a two-day period were collected in order to verify historical performance data and to provide a more complete wastewater analytical profile. The performance characteristics which were observed during the survey are presented in Table VIIH-3. The major purpose for the review of historical treatment plant performance data was to be able to quantify BPCTCA reduction factors, which could then be applied to BPCTCA raw waste load values to develop an end-of-pipe treatment model. Based on historical data for activated sludge treatment plants, a BOD_5 treatment efficiency of 93 percent was selected as being applicable for the development of BPCTCA treatment technology.

In addition to BOD, the other major pollutant to be considered is total suspended solids (TSS). The model BPCTCA treatment system is an activated sludge system. Such systems generate biological solids which must be removed before discharge of the effluent. Unless one is thoroughly familiar with a particular plant's operation, it is difficult to interpret TSS data. For this reason, recommendation concerning TSS will be based on effluent concentration.

Table VIIH-2

Summary of Historic Treatment Performance

Hospitals

Hospital	Type of Treatment	BOD_5 Removal Eff. (%)			Effluent BOD_5 mg/L			TSS Removal Eff. (%)			Effluent TSS mg/L		
		P90	P50	P10	P90	P50	P10	P90	P50	P10	P90	P50	P10
93	Activated Sludge	96	95	90	25	14	10	92	89	85	16	12	8
102	Activated Sludge	93	92	91	20	16	12	95	94	91	15	10	6
94*	Trickling Filter		88			27			87			12	
95*	Trickling Filter		92			32			88			24	
96*	Trickling Filter		94			11			95			8	
97*	Trickling Filter		90			24			88			19	
98*	Trickling Filter		98			4			98			3	
99*	Trickling Filter		96			11			95			12	
100*	Trickling Filter		96			10			90			2	
101*	Trickling Filter		76			56			83			33	

*Values based on annual average removal efficiencies

Table VIIH-3

Survey Data - Wastewater Treatment Plant

Hospitals

Hospital Number	Type of Treatment	BOD Removal %	BOD Effl. Conc. mg/L	COD Removal %	COD Effl. Conc. mg/L	TOC Removal %	TOC Effl. Conc. mg/L	TSS Removal %	TSS Effl. Conc. mg/L
93	Activated Sludge	85	34	45	325	58	52	neg.	175

Since flocculator-clarifiers with polymer addition have been used in other industries to reduce TSS effluent levels, this process has been applied to hospital wastewater. On this basis a BPCTCA effluent limitation of 30 mg/L is recommended for TSS.

To assess the economic impact of the proposed effluent standards, a model activated sludge treatment system was developed. The end-of-pipe treatment model was designed based on Raw Waste Load (RWL) data for the Hospitals category. The primary design parameter in BPCTCA, BADCT and BATEA treatment models is BOD_5 removal.

The use of an activated sludge treatment model is done only to facilitate the economic analysis and is not to be inferred as the only technology capable of meeting the effluent limitation guidelines and standards of performance presented in this report.

SECTION VIII

COST, ENERGY, AND NON-WATER QUALITY ASPECTS

General

Quantitative cost information for the suggested end-of-pipe treatment models is presented in the following discussion for the purpose of assessing the economic impact of the proposed effluent limitation guidelines on the various Miscellaneous Chemicals industries. A separate economic analysis of treatment cost impact on the industry will be prepared by another contractor and the results will be published in a separate document.

In order to evaluate the economic impact of treatment on a uniform basis, end-of-pipe treatment models which will provide the desired level of treatment were proposed for each industrial subcategory. In-plant control measures have not been evaluated because the cost, energy, and non-water quality aspects of in-plant controls are intimately related to the specific processes for which they are developed. Although there are general cost and energy requirements for equipment items, these correlations are usually expressed in terms of specific design parameters. Such parameters are related to the production rate and other specific considerations at a particular production site.

In the manufacture of a single product there is a wide variety of process plant sizes and unit operations. Many detailed designs might be required to develop a meaningful understanding of the economic impact of process modifications. Such a development is really not necessary, however, because the end-of-pipe models are capable of attaining the recommended effluent limitations at the RWL's within the subcategories of each industry. A series of designs for end-of-pipe treatment models has been provided. These can be related directly to the range of influent hydraulic and organic loading within each industry and subcategory, and the costs associated with these systems can be divided by the production rate for any given subcategory to show the economic impact of the system in terms of dollars per pound of product. The combination of in-plant controls and end-of-pipe treatment used to attain the effluent limitation guidelines presented in this document should be a decision made by the individual plant, based generally upon economic considerations.

The major non-water quality consideration associated with in-process control measures is the means of ultimate disposal of wastes. As the volume of the process RWL is reduced, alternative disposal techniques such as incineration, pyrolysis, evaporation, ocean discharge, and deep-well injection become more feasible. Recent regulations tend to limit the use of ocean discharge and deep-well injection because of the potential long-term detrimental effects associated with these disposal procedures. Incineration and evaporation are viable alternatives for concentrated waste streams. Considerations involving air pollution and auxiliary fuel requirements,

depending on the heating value of the waste, must be evaluated individually for each situation.

Other non-water quality aspects such as noise levels will not be perceptibly affected by the proposed wastewater treatment systems. Most miscellaneous chemical plants generate fairly high noise levels (85-95 dB (A)) within the battery limits because of equipment such as pumps, compressors, steam jets, flare stacks, etc. Equipment associated with in-process and end-of-pipe control systems would not add significantly to these noise levels.

Extensive annual and capital cost estimates have been prepared for numerous end-of-pipe treatment models for each industry to help EPA evaluate the economic impact of the proposed effluent limitation guidelines. The capital costs were generated on a unit process basis (e.g., equalization, neutralization, etc.) and are reported in the form of cost curves in Supplement A for all the proposed treatment systems. The following percentage figures were added on to the total unit process costs to develop the total capital cost requirements:

Item	Percent of Unit Process Capital Cost
Electrical	14
Piping	20
Instrumentation	8
Site Work	6
Engineering Design and Construction Surveillance Fees	15
Construction Contingency	15

Land costs were computed independently and added directly to the total capital costs.

Annual costs were computed using the following cost basis:

Item	Cost Allocation
Capital Recovery plus Return	10 yrs at 10 percent
Operations and Maintenance	Includes labor and supervision, chemicals, sludge hauling and disposal, insurance and taxes (computed at 2 percent of the capital cost), and maintenance (computed at 4 percent of the capital cost).
Energy and Power	Based on $0.02/kw hr for electrical power and 17¢/gal for grade II furnace oil.

The 10 years period used for capital recovery is that which is presently acceptable under current Internal Revenue Service Regulations pertaining to industrial pollution control equipment.

The following is a qualitative as well as a quantitative discussion of the possible effects that variations in treatment technology or design criteria could have on the total capital costs and annual costs.

Technology or Design Criteria	Capital Cost Differential
1. Use aerated lagoons and sludge dewatering lagoons in place of the proposed treatment system.	1. The cost reduction could be 20 to 40 percent of the proposed figures.
2. Use earthen basins with a plastic liner in place of reinforced concrete construction, and floating aerators with permanent-access walkways.	2. Cost reduction could be 20 to 30 percent of the total cost.
3. Place all treatment tankage above grade to minimize excavation, especially if a pumping station is required in any case. Use all-steel tankage to minimize capital cost.	3. Cost savings would depend on the individual situation.
4. Minimize flows and maximize concentrations through extensive in-plant recovery and water conservation, so that other treatment technologies, e.g., incineration, may be economically competitive.	4. Cost differential would depend on a number of items, e.g., age of plant, accessibility to process piping, local air pollution standards, etc.

All cost data were computed in terms of August 1972 dollars, which corresponds to an Engineering News Records Index (ENR) value of 1780.

A. Pharmaceutical Industry

This section provides quantitative information relative only to the suggested end-of-pipe treatment models. Since in-plant modifications have not been recommended, quantitative information was not developed for this potential pollution abatement approach.

The design considerations for the model treatment systems (namely, the influent RWL) were selected so that they represented the average RWL expected within each subcategory. This generated cost data which would be representative when applied to most of the RWL data within a particular subcategory. Activated sludge was proposed in Section VII as the BPCTCA treatment system for subcategories A, B, C, D and E. Thermal oxidation is recommended for subcategory C_2 for all treatment levels. The activated sludge plant designs were varied to generate cost-effectiveness data for each subcategory. Dual-media filtration was proposed in Section VII as BADCT treatment for subcategories B, D and E. Activated carbon was proposed for BATEA treatment for subcategories A and C.

BPCTCA Cost Model

A general flow diagram for the BPCTCA wastewater treatment facilities for subcategories A, B, C_1, D and E is shown in Figure VIIIA-1. Specific unit processes, applicable to each subcategory model treatment facility, are listed in Table VIIIA-1. A summary of the general design basis is presented in Table VIIIA-2, and a summary of the treatment system effluent requirements is presented in Table VIIIA-3.

The recommended BPCTCA treatment facility for subcategory C_2 is thermal oxidation. A general flow diagram is shown in Figure VIIIA-2. A summary of the general design basis is presented in Table VIIIA-4.

The following is a brief discussion of the treatment technology available and the rationale for selection of the unit processes included.

Rationale For Selection of Unit Treatment Processes

Subcategories A, B, C_1, D and E

Equalization facilities are provided in order to minimize short-interval (e.g. hourly) fluctuations in the organic loading to the treatment plant, as well as to absorb slug loads from reactor cleanouts and accidental spills, and to minimize the usage of neutralization chemicals. On the basis of average flow, two-day detention time is provided for subcategory B, D, and E flows, compared to one day's detention for subcategories A and C_1.

FIGURE VIIIA-1

PHARMACEUTICAL INDUSTRY BPCTCA COST MODEL SUBCATEGORIES A, B, C_1, D AND E

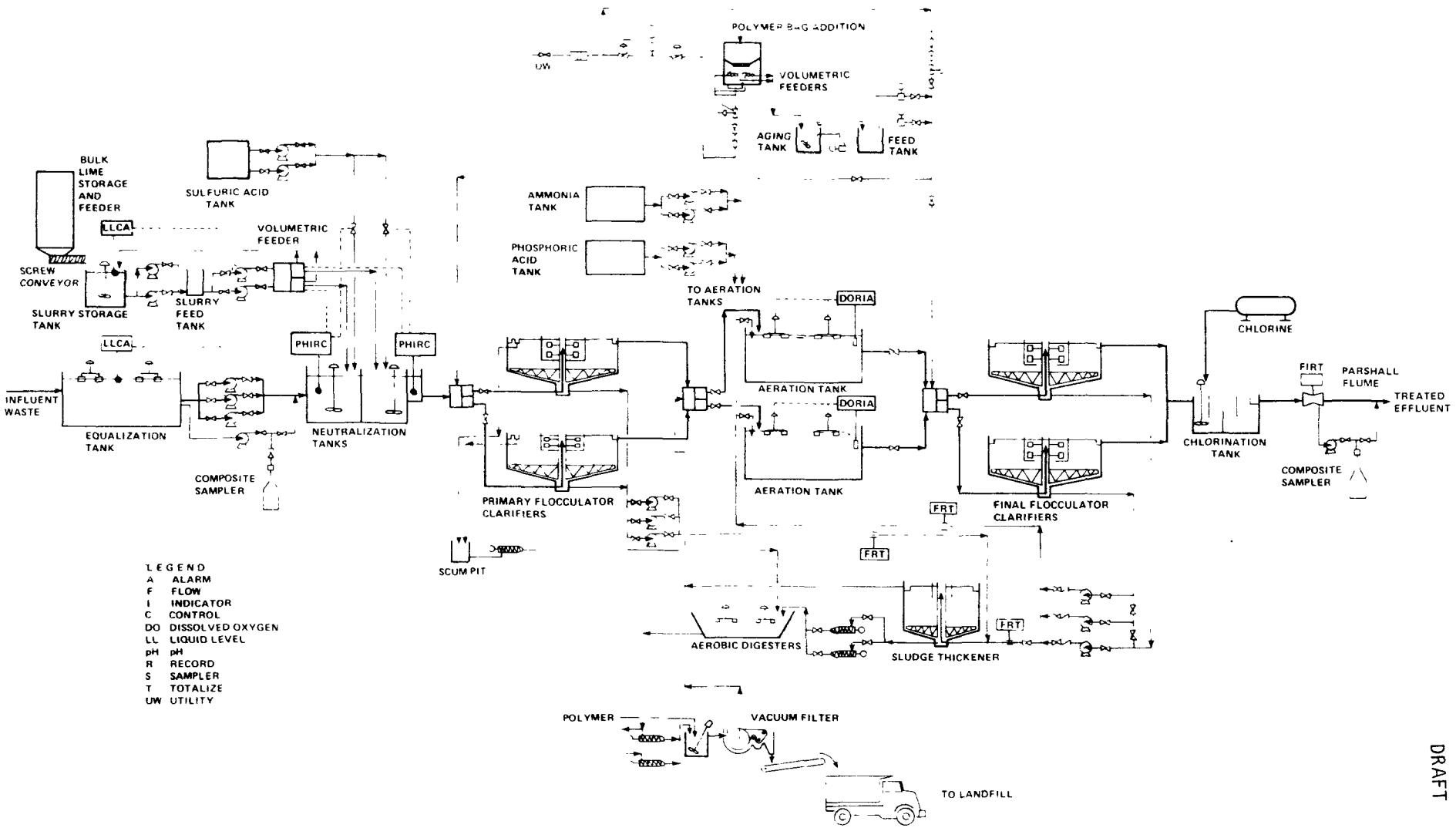

DRAFT

Table VIIIA-1

BPCTCA Waste Treatment Cost Models

Pharmaceutical Industry

Subcategory	A	B	C_1	D	E
Equalization Facilities	X	X	X	X	X
Neutralization Facilities	X		X		
Primary Flocculator/Clarifier	X		X		
Aeration Tanks	X	X	X	X	X
Nutrient Addition Facilities	X	X	X	X	X
Secondary Flocculator/Clarifier	X	X	X	X	X
Flow Measurement & Effluent Monitoring	X	X	X	X	X
Sludge Thickening Facilities	X		X		
Aerobic Sludge Digestion Facilities	X	X	X	X	X
Vacuum Filtration Facilities	X		X	X	
Sludge Disposal Via Sanitary Landfill	X	X	X	X	X

DRAFT

Table VIIIA-2

BPCTCA Cost Model Design Summary

Pharmaceutical Industry

Subcategories A,B,C_1,D and E

Treatment System Hydraulic Loading
(average design capacities)

Subcategory	Hydraulic Loading (gpd)	Hydraulic Loading (L/day)
A	307,000	1,160,000
B	20,000	76,000
C_1	808,000	3,060,000
D	70,000	265,000
E	28,500	108,000

Equalization

For plants with less than 24-hour/day and 7 day/week production, a minimum holding time of 1.5 days is provided, with continuous discharge from the equalization basin over 24 hours. For plants with less than 24-hour/day and 5 days/week production, 2-day equalization is provided. Discharge from the basin will be continuous over the seven days. For plants with 24-hour/day and 7/day week batch production processes, one-day holding capacity is provided. For continuous production processes, no equalization is required except in special cases. Protective liners are provided, based on the following criteria:

Influent pH	Type of Liner required
Greater than 6	No lining
Between 4.0 and 6.0	Epoxy coating
Between 2.0 and 4.0	Rubber or polypropylene
Below 2.0	Acid brick lining

Neutralization

The two-stage neutralization basin is sized on the basis of an average detention time of 10 minutes. The size of lime and acid handling facilities is determined according to acidity/alkalinity data collected during the survey. Bulk lime-storage facilities (20 tons) or bag

Table VIIIA-2
(continued)

storage is provided, depending on plant size. Sulfuric acid storage is either by 55-gallon drums or in carbon-steel tanks. Lime or acid addition is controlled by two pH probes, one in each basin. The lime slurry is added to the neutralization basin from a volumetric feeder. Acid is supplied by positive displacement metering pumps.

Primary Flocculation Clarifiers

Primary flocculator clarifiers with surface areas less than 1000 square feet are rectangular units with a length-to-width ratio of 1 to 4. The side water depth varies from 6 to 8 feet depending on plant size, and the design overflow rate is 800 gpd/sq ft. Clarifiers with surface areas greater than 1000 square feet are circular units. The side water depth varies from 7 to 13 feet depending on plant size and the design overflow rate is 600 gpd/sq ft. Polymer addition facilities are provided.

Nutrient Addition

Facilities are provided for the addition of phosphoric acid and anhydrous ammonia to the biological system in order to maintain the ratio of BOD:N:P at 100:5:1.

Aeration Basin

The size of aeration basins is based on historic treatability data collected during the survey. Mechanical surface aerators are provided in the aeration basin.

Aerators were selected on the basis of the following:

Oxygen Utilization: Energy	0.8 lb O_2/lb BOD removed
Oxygen Utilization: Endogenous	6 lbs O_2/hr/1000 lbs MLVSS
α	0.75
β	0.90
Oxygen Transfer	3.5 lbs O_2/hr/shaft HP at 20°C and D.O. in tap water
Motor Efficiency	85 percent
Minimum Basin D.O.	2 mg/L
Minimum Number of Aerators	2

Oxygen is monitored in the basins using D.O. probes.

Table VIIIA-2
(continued)

Secondary Flocculation Clarifiers

The design basis for secondary flocculation clarifiers is the same as for primary units except for overflow rate. Secondary clarifiers are designed for an overflow rate of 600 gpd/sq ft. Feed facilities for polymer addition are provided.

Sludge Thickener

The thickener provided was designed on the basis of a solids loading of 6 lbs/sq ft/day.

Aerobic Digester

The size of the aerobic digester is based on a hydraulic detention time of 20 days. The size of the aerator-mixers was based on an oxygen requirement of 1.6 lbs O_2/lb VSS destroyed and a mixing requirement of 165 HP/million gallons of digester volume.

Vacuum Filtration

The size of the vacuum filters was based on a cake yield of 2 lbs/sq ft/hr for biological sludge, and 4 lbs/sq ft/hr for combined primary and biological sludge. Maximum running times of 16 hours for large plants and 8 hours for small plants are used. The polymer system was sized to deliver up to 20 lbs of polymer per ton of dry solids.

Final Sludge Disposal

For all plants, sludge is disposed of at a sanitary landfill.

Design Philosophy

Individual units within the plant have been sized and arranged so that they may be taken out of operation for maintenance without seriously disrupting the operation of the plant.

Table VIIIA-3

BPCTCA End-Of-Pipe Treatment System Requirements

Pharmaceutical Industry

Subcategories A, B, C_1, C_2, D and E

Subcategory	Flow SWRL kL/kkg Prod. (gal./100 lbs product)	Flow kL/day (gpd)	BOD_5 RWL BOD/kkg lbs. product	Effluent BOD_5 (kg BOD/1000 l kg product	Effluent BOD mg/L
A	530 (64,000)	1,200 (307,000	2,500	175	328
B	(67,560)	(20,076)	144	10.1	18
C_1	(19,160)	3,100 (808,000)	302	21.1	132
C_2	100 (12,000)	76 (20,000)		52	525
D	15 (1,750)	270 (70,000)	5,200	0.577	39
E	2 (285)	(28,108)	0.36	0.0252	11

[1]kg/kkg production is equivalent to lbs/1000 lbs production
[2]Data for subcategory is expressed in terms of floor area rather than production level

FIGURE VIIIA-2

PHARMACEUTICAL INDUSTRY
BPCTCA COST MODEL - SUBCATEGORY C_2

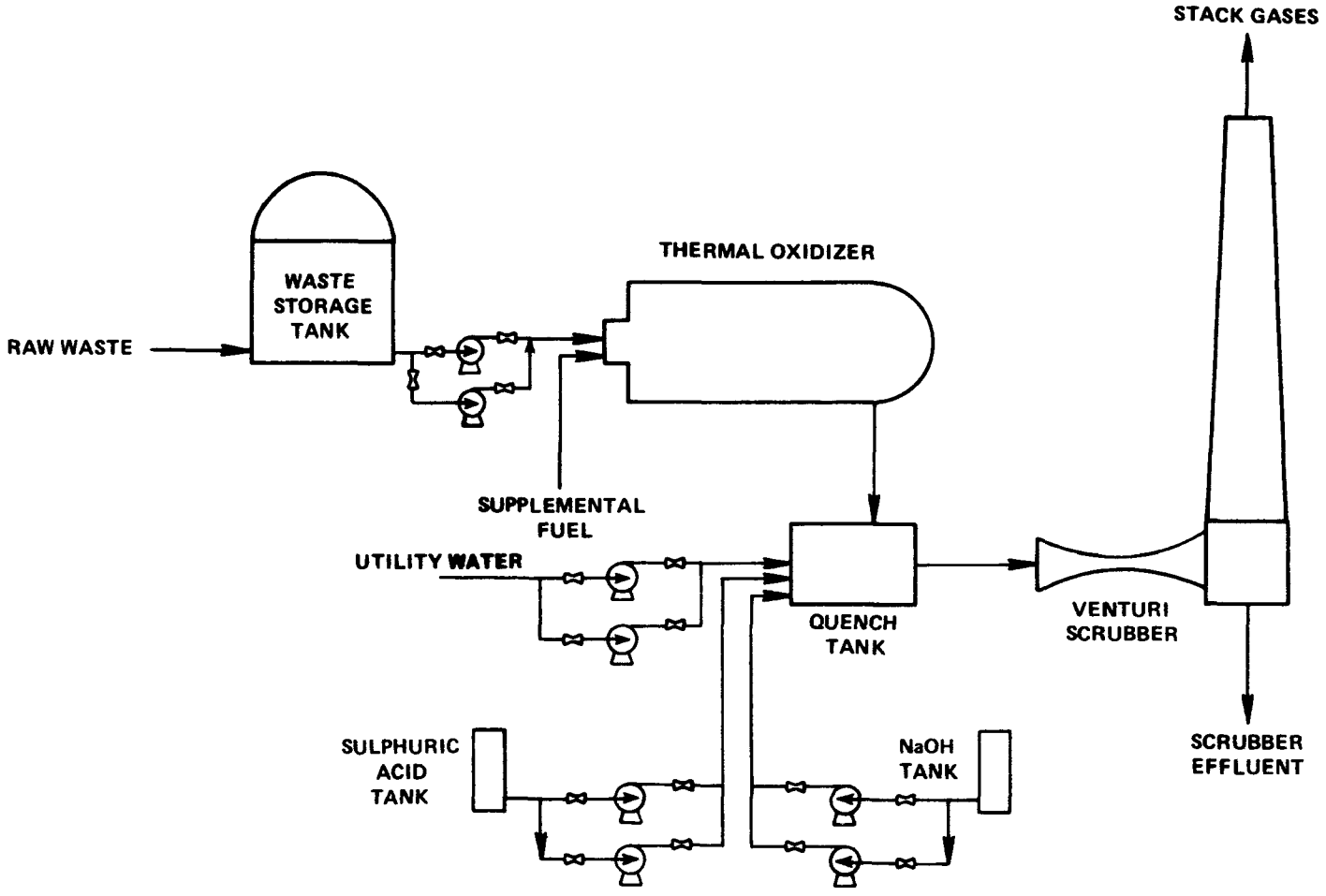

DRAFT

Table VIIIA-4

BPCTCA End-Of-Pipe Treatment System Design Summary

Pharmaceutical Industry

Subcategory C_2

Treatment System Hydraulic Loading

The treatment system has been designed for a flow of 20,000 gal/day.

Waste Storage

Storage facilites have been provided with a capacity to hold waste for 2.5 days.

Thermal Oxidizer

Supplemental fuel requirements for the thermal oxidizers were based on a heat release of 2.3×10^6 BTU/hr for dilute wastes and 12×10^6 BTU/hr for concentrated wastes.

The larger detention time is provided to allow for the hydraulic and organic variability inherent in manufacturing facilities operating less than 24 hours per day and seven days per week. The added detention time will provide for continuous seven days per week operation of the wastewater treatment facilities.

After equalization and depending on the individual plant's product mix, it may be necessary to neutralize the wastewater to make it more amenable to biological treatment. Neutralization facilities are provided for subcategory A and C_1 wastes; however, neutralization is not required for wastes in subcategories B, D and E.

Primary clarification units are included for subcategory A and C_1 however, they are not included in subcategory B, D, and E facilities because the TSS SRWL data indicated it would not be necessary to remove TSS before biological treatment.

For all subcategories, a single-stage activated sludge process was selected because of its demonstrated ability to efficiently treat pharmaceutical wastes.

Although single-stage activated sludge treatment system has been selected for the purpose of developing cost models, a multi-stage activated sludge treatment system merits consideration for subcategories A and C_1. The raw waste loads for subcategories A and C_1 are significantly higher than other subcategories, and, although single-stage processes have provided efficient treatment, use of a multi-stage system may be desirable for the following reasons:

1. Greater overall removal of BOD.
2. Increased stability and more consistent performance.
3. Greater stability against shock loads.
4. Ability to nitrify in the second stage, resulting in some NH_3 removal.

Activated sludge facilities pose a distinct sludge disposal problem. In the biological process, for every pound of BOD removed from a wastewater, approximately 0.6 pound of TSS (biological solids) is produced which must be removed from the system.

Subcategory C_2

For subcategory C_2 a thermal oxidation process was selected as the model waste treatment system. This system was selected for the following reasons:

1. Demonstrated performance

2. High heat release value of the waste

3. High cost of biological treatment of wastes generated by industries in subcategory C_2.

Storage facilities have been provided in order to permit maintenance of the thermal oxidizers and to insure proper blending and equalizing of the wastes. A venturi scrubber is also provided to reduce emissions to the atmosphere. Supplemental fuel is required for the system and use of fuel will vary depending on the heat release of the waste. Fuel oil has been selected as the supplemental fuel for the purpose of arriving at operating costs.

BATEA Cost Model

The BATEA treatment model used for economic evaluation of the proposed limitations includes the BPCTCA treatment model followed by dual media filtration and activated carbon adsorption. A typical flow diagram for the selected model treatment facilities is shown in Figure VIII-3. A summary of the general design basis is presented in Table VIIA-5. Treatment facilities for subcategory A and C_1 plants include both dual-media gravity filtration and carbon adsorption. Due to the low COD concentrations obtainable by application of BPCTCA technology, carbon adsorption will not be required for subcategories B, D and E. The removal efficiencies for dual-media filtration is established according to the rationale presented in the discussion for BADCT technology below. No activated carbon treatment systems were observed during the survey; consequently, to investigate the possibilities of using activated carbon technology on the effluents from biological treatment plants treating pharmaceutical wastewaters, a series of carbon isotherms were run at standard conditions using a contact time of 30 minutes. The results of the carbon isotherm tests are presented in Tables VIIA-4, VIIA-5, and VIIA-6. Average performance values for subcategories A and C_1 are as follows:

Parameter	Carbon Exhaustion Rate (lbs removed/lb carbon)	Maximum Soluble Pollutant Removal (percent)
COD	0.69	80
BOD_5	0.02	77
TOC	0.48	80

FIGURE VIIIA-3

PHARMACEUTICAL INDUSTRY
BATEA COST MODEL
SUBCATEGORIES A AND C_1

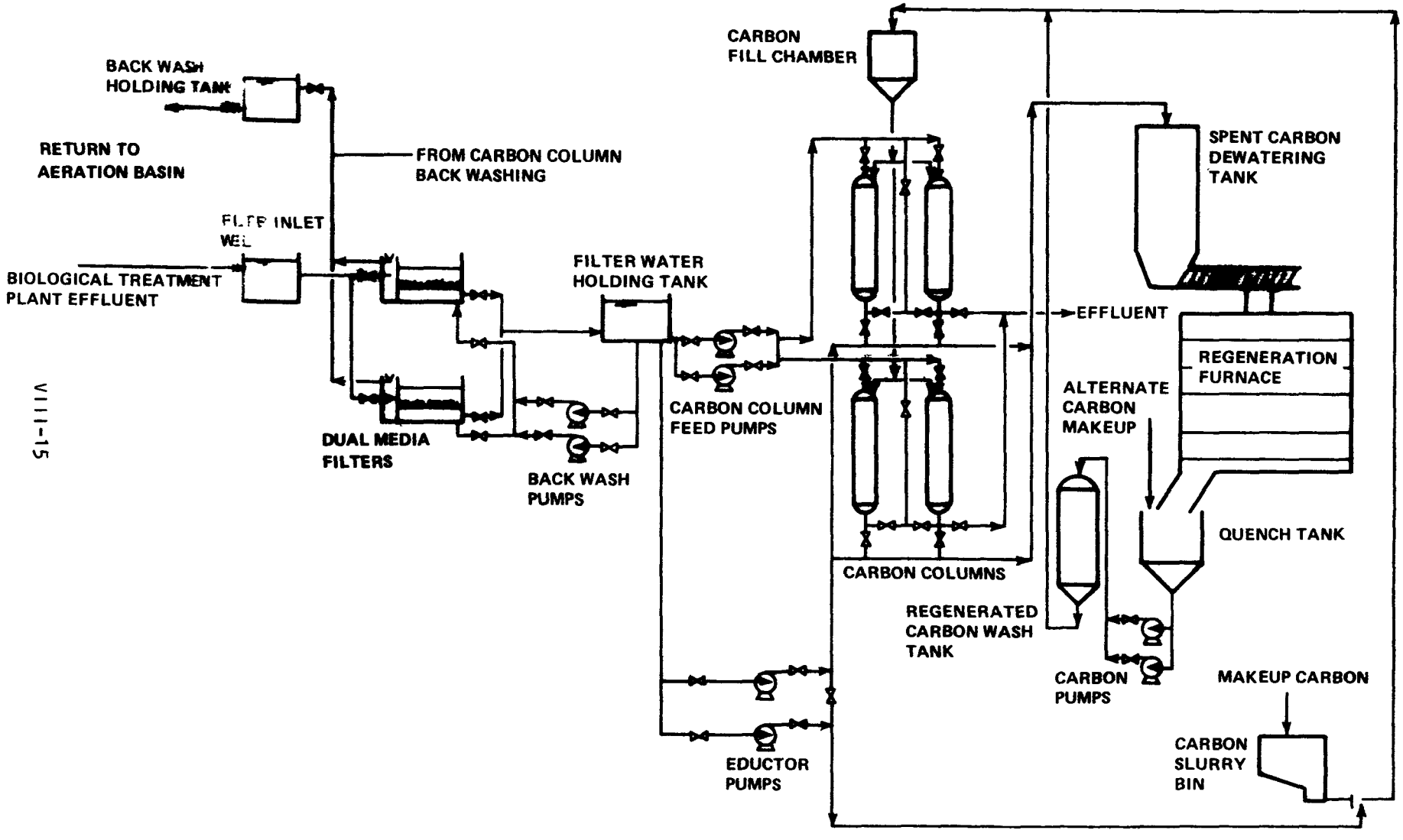

DRAFT

Table VIIIA-5

BATEA Cost Model Design Summary

Pharmaceutical Industry

Subcategories A,B,C_1,D and E

Dual-Media Filtration

The size of the filters is based on an average hydraulic loading of 3 gpm/sq ft. The size of backwash facilities provides rates up to 20 gpm/sq ft and a total backwash cycle of up to 10 minutes in duration. The filter media are 24" of coal (1mm effective size) and 12" of sand (0.4-0.5 mm effective size).

Backwash Holding Tank

Tankage is provided to hold the backwash water and decant it back to the treatment plant over a 24-hour period. This will eliminate hydraulic surging of the treatment units.

Activated Carbon Columns

The size of the carbon columns is based on a hydraulic loading of 4 gpm/sq ft and a column detention time of 30 minutes. A backwash rate of 20 gpm/sq ft was assumed for 50% bed expansion at 70°F.

Regeneration Furnace

A carbon exhaustion rate of 0.5 lb COD/lb carbon was used for the sizing of the regeneration facilities. A multiple-hearth furnace is employed for regeneration of the carbon and is designed for a carbon loading of 2.5 lbs/sq ft/hr and 5 days/week operation.

Ideally, pilot-plant continuous column studies should be run in order to generate design data. However, inspection of the data in Tables VIIIA-1 and VIIIA-2 indicates carbon adsorption has potential for subcategories A and C_1, with regard to cost-effective wastewater treatment.

In order to develop BATEA effluent criteria the following treatment efficiencies were judged to be reasonable based on the available data, data presented in process Design Manual for Carbon Adsorption (A-24) and the experience of the contractor.

Pollutant	Subcategories A, and C_1 Removal Efficiency[1] (percent)
COD	80
BOD	77
TOC	80

[1] Incremental over BADCT filtration effluent

Dual-media filtration is provided since activated carbon typically requires that the concentration of TSS be 50 mg/L or lower to maximize carbon adsorption and minimize the filtration function. High TSS would involve shortened filter runs and increased amounts of backwash water usage.

Due to the high degree of treatment obtainable by application of BPCTCA treatment technology, no further treatment is proposed for subcategory C_2.

The BADCT end-of-pipe treatment model used for economic evaluation of the proposed limitations for subcategories A, B, C_1, D and E includes the BPCTCA treatment model followed by dual media filtration. A typical flow diagram for the selected model treatment facilities is shown in Figure VIIIA-1. A summary of the design basis is presented in Table VIIIA-6. The BADCT treatment model for subcategory C_2 is the same as the BPCTCA treatment model.

Effluent filtration by use of dual-media filters cannot be considered a demonstrated technology for the Pharmaceutical industry. During the plant survey visit use of this technology was not observed. Consequently, historical data needed to quantify the effectiveness of effluent filtration were not available.

FIGURE VIIIA-4

PHARMACEUTICAL INDUSTRY
BADCT COST MODEL
SUBCATEGORIES A, B, C, D AND E

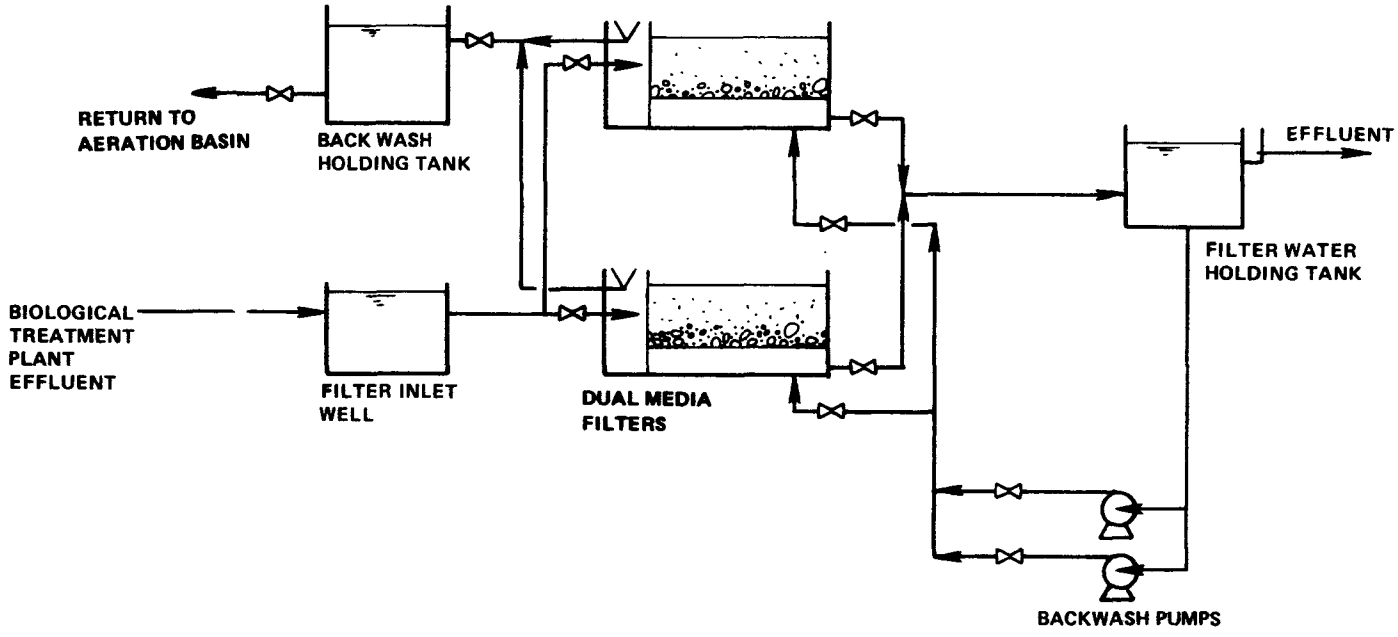

DRAFT

Table VIIIA-6

BADCT Treatment System Design Summary

Pharmaceutical Industry

Subcategories A,B,C_1,D and E

Dual-Media Filtration

The size of the filters is based on an average hydraulic loading of 3 gpm/sq ft. The size of the backwash facilities should provide rates up to 20 gpm/sq ft and for a total backwash cycle of up to 10 minutes in duration. The filter media are 24" of coal (1 mm effective size) and 12" of sand (0.4-0.5 mm effective size).

Backwash Holding Tank

Tankage is provided to hold the backwash water and decant it back to the treatment plant over a 24-hour period. This will eliminate hydraulic surging of the treatment units.

In order to quantify the effectiveness of effluent filtration, samples of biological treatment plant effluents were collected and filtered, using filter paper, to determine the fraction of effluent BOD, COD and TOC attributable to suspended solids. Results of these tests are presented in Table VIIIA-7. Based on this data, the experience of the contractor, and information contained in the literature, the following suspended pollutant to TSS relationships were selected for the purpose of determining BOD_5, COD and TOC removals obtainable by dual-media filtration:

$$\frac{BOD_5}{TSS} = 0.20; \qquad \frac{COD}{TSS} = 1.14; \qquad \frac{TOC}{TSS} = 0.42$$

These valves are based on $\frac{1.42 \text{ lbs COD}}{\text{lb VSS}}$, $\frac{0.53 \text{ lbs TOC}}{\text{lb VSS}}$, and VSS = 0.8 TSS.

Cost

Capital and annual cost data were prepared for each of these proposed treatment systems in accordance with the considerations outlined in the General part of this section. The cost requirements for implementing the proposed effluent standards are presented in Tables VIIIA-7 through VIIIA-12. The detailed breakdown by unit processes are included in the Supplement A (supporting document).

A discussion of the possible effects that variations in treatment technology or design criteria could have on capital and annual costs is presented in the preceding General Section.

Wastes from certain plants within subcategories A and C_1 may be amenable to sludge incineration because of the large quantities of sludge produced. For example, sludge incineration would reduce the quantities of sludge cake by about 90 percent, and is viable alternative sludge disposal method. However, if additional energy in the form of auxiliary boiler fuel is required for incineration this alternative is strongly discouraged. Sludge incineration costs were not evaluated for those specific cases in subcategories A and C_1, because the particular economics depend to a large degree on the accessibility of a sanitary landfill and the relative associated haul costs.

Before comparing the variations in costs between each subcategory, the following discussion is presented to help understand the complexities involved in evaluating cost effectiveness data. Every treatment system is composed of units whose design basis is primarily hydraulically dependent, organically dependent, or a combination of the two.

Table VIIIA-7

Wastewater Treatment Costs for
BPCTCA, BADCT and BATEA Effluent Limitations
(ENR 1780 - August, 1972 Costs)

Pharmaceutical Industry - Subcategory A

	Technology Level			
	RWL	BPCTCA	BADCT[2]	BATEA[2]
Average Production 2.18 x 10^3 kg/day (4.8 x 10^3 lbs/day)				
Production Days	365	365	365	365
Wastewater Flow - kL/Day	1,160	1,160	1,160	1,160
(gpd)	(307,000)	(307,000)	(307,000)	(307,000)
kL/1,000 kg Product	533	533	533	533
(gal/1,000 lbs)	(64,000)	(64,000)	(64,000)	(64,000)
BOD Effluent Limitation - kg BOD/1,000 kg product	2,500	175	172	40
mg/L	4,690	328	322	74
COD Effluent Limitation - kg COD/1,000 kg product	5,000	550	532	106
mg/L	9,370	1,030	997	199
Total Capital Costs		$2,570,000	$110,000	$470,000
Annual Costs				
Capital Recovery plus return at 10% at 10 years		$419,000	$18,000	$77,000
Operating + Maintenance		341,000	15,000	94,000
Energy + Power		72,000	100	8,000
Total Annual Cost		$832,000	$33,000	$179,000
Cost[1] $/1,000 kg Product		$1,050	$42	$225
($/1,000 lbs Product)		($475)	($19)	($102)

[1]Cost based on total annual cost
[2]Incremental cost over BPCTCA cost

DRAFT

Table VIIIA-8

Wastewater Treatment Costs for
BPCTCA, BADCT and BATEA Effluent Limitations
(ENR 1780 - August, 1972 Costs)

Pharmaceutical Industry - Subcategory B

	Technology Level			
	RWL	BPCTCA	BADCT[2]	BATEA[2]
Average Production 136 x 10^3 kg/day (0.3 x 10^3 lbs/day)				
Production Days	260	260	260	260
Wastewater Flow - kL/Day	76	76	76	76
(gpd)	(20,100)	(20,100)	(20,100)	(20,100)
kL/1,000 kg Product	559	559	559	559
(gal/1,000 lbs)	(67,000)	(67,000)	(67,000)	(67,000)
BOD Effluent Limitation - kg BOD/1,000 kg product	144	10.1	8.93	8.93
mg/L	258	18	16	16
COD Effluent Limitation - kg COD/1,000 kg product	269	29.6	23.5	23.5
mg/L	481	53	42	42
Total Capital Costs		$677,000	$28,000	$28,000
Annual Costs				
Capital Recovery plus return at 10% at 10 years		$110,000	$4,600	$4,600
Operating + Maintenance		60,000	9,200	9,200
Energy + Power		1,500	100	100
Total Annual Cost		$172,000	$13,900	$13,900
Cost[1] $/1,000 kg Product		$4,860	$393	$393
($/1,000 lbs Product)		($2,210)	($178)	($178)

[1]Cost based on total annual cost
[2]Incremental cost over BPCTCA cost

DRAFT

Table VIIIA-9

Wastewater Treatment Costs for
BPCTCA, BADCT and BATEA Effluent Limitations
(ENR 1780 - August, 1972 Costs)

Pharmaceutical Industry - Subcategory C_1

	Technology Level			
	RWL	BPCTCA	BADCT[2]	BATEA[2]
Average Production 19.2 x 10^3 kg/day (42.2 x 10^3 lbs/day)				
Production Days	365	365	365	365
Wastewater Flow - kL/Day	3,060	3,060	3,060	3,060
(gpd)	(808,000)	(808,000)	(808,000)	(808,000)
kL/1,000 kg Product	159	159	159	159
(gal/1,000 lbs)	(19,200)	(19,200)	(19,200)	(19,200)
BOD Effluent Limitation - kg BOD/1,000 kg product	302	21	20	5
mg/L	1,890	132	126	29
COD Effluent Limitation - kg COD/1,000 kg product	572	63	58	12
mg/L	3,580	394	360	72
Total Capital Costs		$3,450,000	$190,000	$610,000
Annual Costs				
Capital Recovery plus return at 10% at 10 years		$562,000	$31,000	$100,000
Operating + Maintenance		424,000	18,800	97,000
Energy + Power		46,000	200	5,000
Total Annual Cost		$1,032,000	$50,000	$202,000
Cost[1] $/1,000 kg Product		$147	$7.15	$28.81
($/1,000 lbs Product)		($67)	($3)	($13)

[1]Cost based on total annual cost
[2]Incremental cost over BPCTCA cost

DRAFT

Table VIIIA-10

Wastewater Treatment Costs for
BPCTCA, BADCT and BATEA Effluent Limitations
(ENR 1780 - August, 1972 Costs)

Pharmaceutical Industry - Subcategory C_2

	Technology Level			
	RWL	BPCTCA	BADCT[2]	BATEA[2]
Average Production 727 x 10^3 kg/day (1.6 x 10^3 lbs/day)				
Production Days	365	365	365	365
Wastewater Flow - kL/Day	72.7	72.7	72.7	72.7
(gpd)	(19,200)	(19,200)	(19,200)	(19,200)
kL/1,000 kg Product	100	100	100	100
(gal/1,000 lbs)	(12,000)	(12,000)	(12,000)	(12,000)
BOD Effluent Limitation - kg BOD/1,000 kg product	5,200	52	52	52
mg/L	52,500	525	525	525
COD Effluent Limitation - kg COD/1,000 kg product	6,600	66	66	66
mg/L	66,600	667	667	667
Total Capital Costs		$551,000	0	0
Annual Costs				
Capital Recovery plus return at 10% at 10 years		$90,000	0	0
Operating + Maintenance		$90,000	0	0
Energy + Power		$24,000	0	0
Total Annual Cost		$204,000	0	0
Cost[1] $/1,000 kg Product		$769	0	0
($/1,000 lbs Product)		($349)	(0)	(0)

[1]Cost based on total annual cost
[2]Incremental cost over BPCTCA cost

Table VIIIA-11

Wastewater Treatment Costs for
BPCTCA, BADCT and BATEA Effluent Limitations
(ENR 1780 - August, 1972 Costs)

Pharmaceutical Industry - Subcategory D

	Technology Level			
	RWL	BPCTCA	BADCT[2]	BATEA[2]
Average Production 18.2 x 10^3 kg/day (40 x 10^3 lbs/day)				
Production Days	260	260	260	260
Wastewater Flow - kL/Day	151	151	151	151
(gpd)	(70,000)	(70,000)	(70,000)	(70,000)
kL/1,000 kg Product	8.3	8.3	8.3	8.3
(gal/1,000 lbs)	(1,750)	(1,750)	(1,750)	(1,750)
BOD Effluent Limitation - kg BOD/1,000 kg product	8.1	0.567	0.540	0.540
mg/L	555	39	37	37
COD Effluent Limitation - kg COD/1,000 kg product	14.7	1.62	1.46	1.46
mg/L	1,010	111	100	100
Total Capital Costs		$1,050,000	$49,000	$99,000
Annual Costs				
Capital Recovery plus return at 10% at 10 years		$171,000	$8,000	$8,000
Operating + Maintenance		$81,000	$11,000	$11,000
Energy + Power		$5,000	$100	$100
Total Annual Cost		$257,000	$19,000	$19,000
Cost[1] $/1,000 kg Product		$54.3	$4.0	$4.0
($/1,000 lbs Product)		($24.7)	($1.8)	($1.8)

[1]Cost based on total annual cost
[2]Incremental cost over BPCTCA cost

DRAFT

Table VIIA-12

Wastewater Treatment Costs for
BPCTCA, BADCT and BATEA Effluent Limitations
(ENR 1780 - August, 1972 Costs)

Pharmaceutical Industry - Subcategory E

	Technology Level			
	RWL	BPCTCA	BADCT[2]	BATEA[2]
Average Research Area	9.3 x 10^3 sq m (100 x 10^3 sq ft)			
Production Days				
Wastewater Flow - kL/Day	108	108	108	108
(gpd)	(28,500)	(28,500)	(28,500)	(28,500)
kL/1,000 sq m	11.6	11.6	11.6	11.6
(gal/1,000 sq ft)	(285)	(285)	(285)	(285)
BOD Effluent Limitation - kg BOD_5/1,000 sq m	1.76	0.12	0.10	0.10
(lbs BOD_5/1,000 sq ft)	(0.36)	(0.025)	(0.021)	(0.021)
mg/L	151	11	9	9
COD Effluent Limitation - kg COD/1,000 sq m	3.63	0.40	0.27	0.27
(lbs COD/1,000 sq ft)	(0.74)	(0.081)	(0.055)	(0.055)
mg/L	311	34	23	23
Total Capital Costs		$677,000	$29,000	$29,000
Annual Costs				
Capital Recovery plus return at 10% at 10 years		$110,000	$4,700	$4,700
Operating + Maintenance		180,000	9,300	9,300
Energy + Power		1,500	100	100
Total Annual Cost		$192,000	$14,000	$14,000
Cost[1] $/1,000 sq m		$20,600	$1,510	$1,510
($/1,000 sq ft)		($1,920)	($140)	($140)

[1]Cost based on total annual cost
[2]Incremental cost over BPCTCA cost

DRAFT

The following is a list of the unit processes employed, and a breakdown of the design basis:

Hydraulically Dependent	Organically Dependent	Hydraulically and Organically Dependent
Pump station	Thickener	Aeration basin
Equalization	Aerobic digester	Oxygen transfer equipt.
Neutralization	Vacuum filter	
Nutrient addition		
Sludge recycle pump		
Clarifier		

The annual cost associated with hydraulically dependent unit processes is not a function of effluent level. On the other hand, the sizing of the organically dependent units should theoretically vary in direct proportion to the effluent level: e.g., reducing the BOD removal from 95 to 85 percent should reduce the sizes of the sludge handling equipment by approximately 10 percent. However, there are two complicating factors: 1) a relatively few sizes are commercially available; and 2) capacity ranges are broad. These two factors, especially in regard to vacuum filters, tend to negate differentials in capital cost with decreasing treatment levels.

The relationship between design varying contaminant levels and the design of aeration basins and oxygen transfer equipment is somewhat more complex. The levels are dependent on the hydraulic flow, organic concentration, sludge settleability, and the relationship between mixing and oxygen requirements. For example, to reach a particular effluent level, the wastewater's organic removal kinetics will require a particular detention time at a given mixed-liquor concentration. The oxygen transfer capacity of the aerators may or may not be sufficient to keep the mixed liquor suspended solids in suspension within the aeration basin. Therefore, required horsepower would be increased to fulfill a solids mixing requirement. On the other hand, the oxygen requirements may be such that the manufacturer's recommended minimum spacing and water depth requirements would require that the basin volume be increased to accommodate oxygen transfer requirements.

Costs abstracted from Tables VIIIA-7 through VIIIA-12 are presented in Table VIIIA-13 on a per gallon basis. As expected, the estimated total capital and operation and maintenance costs for subcategory A and C_1 are the highest. This reflects the high wastewater flows that characterize these two subcategories. In addition, these wastewaters typically contain high concentrations of organic material, which require relatively long aeration times and more extensive sludge handling facilities.

Table VIIIA-13

Per Gallon Capital and Yearly Operation and Maintenance Costs for the Pharmaceutical Industry Model Treatment Plants

Subcategory	Flow GPD	BPCTCA Model Plant Costs: Total Capital $	Capital / GPD $/GPD	O & M $	O & M / GPD $/GPD	BADCT Model Plant Costs[3]: Total Capital $	Capital / GPD $/GPD	O & M $	O & M / GPD $/GPD	BATEA Model Plant Costs[3]: Total Capital $	Capital / GPD $/GPD	O & M $	O & M / GPD $/GPD
C_2	19,200	551,000	28.7	90,000	4.7	(1)							
B	20,000	677,000	33.8	60,000	3.0	28,000	1.4	9,000	0.4	(2)			
E	28,500	677,000	23.8	80,000	2.8	29,000	1.0	9,300	0.3	(2)			
D	70,000	1,050,000	15.0	81,000	1.2	49,000	0.7	11,000	0.2	(2)			
A	307,000	2,570,000	8.4	341,000	1.1	110,000	0.4	15,000	0.05	470,000	1.5	94,000	0.3
C_1	808,000	3,450,000	4.3	424,000	0.5	190,000	0.2	18,800	0.02	610,000	0.8	97,000	0.1

(1) No additional treatment required to meet BADCT and BATEA limitations.

(2) No additional treatment required to meet BATEA limitations.

(3) Incremental cost over BPCTCA model.

DRAFT

The cost per gallon figures presented in Figure VIIIA-7 decrease with increasing flows, illustrating treatment system economies of scale. The annual cost per thousand pounds of product listed in Table VIIIA-1 through VIIIA-6 also indicate that the plants with the higher production rates have lower annual costs when seen in terms of dollars per 1,000 pounds of production.

Energy

For the Pharmaceutical industry, the primary energy and power needs for BPCTCA level treatment for all Subcategories except C_2, are pumps, aerators, and vacuum filters. For Subcategory C_2 the need of auxiliary fuel as estimated could be considerably reduced by mixing primary waste streams containing high concentration of solvents as normally done in the industry. Under BADCT, energy is needed for additional pumping requirements for all Subcategories except C_2. Primary energy and power needs for BATEA include additional pumping and carbon regeneration furnace fuel requirements. Therefore, the overall impact on energy for this industry should be minimal.

Tables VIIIA-7 through VIIIA-12 present the cost for energy and power for each treatment models for BPCTCA, BATEA and BADCT. The detailed energy and power requirements are included in the Supplement A (supporting document).

Sludge cake quantities from vacuum filtration corresponding to each treatment system design are presented in Supplement A. The following table summarizes the sludge quantities generated by the model plants:

Subcategory	Cu Yd/Year[1]	lbs/day	Exhausted Carbon
A	20,000	6,700	340
B	900	15	--
C_1	11,000	3,700	320
D	450	150	--
E	1,825	40	--

[1]Dry-Weight basis

Non-Water Quality Aspects

The major non-water quality aspects of the proposed effluent limitations guidelines are ultimate sludge disposal, noise and air pollution.

The BPCTCA treatment models proposes sludge disposal by landfilling of the dewatered digested biological sludge for Subcategories A, B, C, D and E and also landfilling for the residue from the thermal oxidation in Subcategory C_2. If practised correctly, landfilling of the digested biological sludge does not create health hazards or nuisance condition. Sludge incineration is a viable alternative, but not included in the treatment model due to high fuel requirement and high cost. Sludge incineration is practised by some plants where sludge is incinerated along with other solid waste and strong waste streams with high fuel value, reducing the auxiliary fuel requirement to a minimal level.

Noise levels will not be appreciably affected with the implementation of the proposed treatment models. Most Pharmaceutical plants in themselves generate relatively high noise levels and the pumps, aerators, mixers, etc. associated with end-of-pipe treatment plants will not add significantly to these noise levels.

Provision for air pollution control equipment have been made in case of thermal oxidation in BPCTCA treatment model for Subcategory C_2 and for carbon regeneration furnaces in BATEA treatment models for Subcategories A, B, C, D, and E. In case of Subcategory A, odor is a problem for an activated sludge plant if the plant is located in the middle of the inhibitory area. Covering of the aeration basin for odor control is practised in some plant.

B. Gum and Wood Chemicals Industry

This section provides quantitative cost information relative to assessing the economic impact of the proposed effluent limitations guidelines on the Gum and Wood Chemicals industry. A separate economic analysis of treatment cost impact on the industry will be prepared by another contractor and the results will be published in a separate document.

In order to evaluate the economic impact on a uniform treatment basis, end-of-pipe treatment models were proposed which will provide the desired level of treatment:

Technology Level	End-of-Pipe Treatment Model
BPCTCA	Activated Sludge.
BADCT	Activated Sludge and Filtration.
BATEA	Activated Sludge, Filtration, and Carbon Adsorption.

The combination of in-plant controls and by end-of-pipe treatment used to attain the effluent limitations guidelines is left up to the individual manufacturer to decide on the basis of cost-effectiveness.

BPCTCA COST MODEL

To evaluate the economic effects of BPCTCA effluent limitations guidelines on the Gum and Wood Chemicals industry, it was necessary to formulate a BPCTCA treatment cost model which is activated sludge. The proposed model is shown on Figure VIIIB-1. A summary of the general design basis used to size the unit processes is presented in Table VIIIB-1.

The following is a brief discussion of the treatment technology available and the rationale for selection of the unit processes to be included in the BPCTCA waste treatment model.

As shown in Figure VIIIB-1, for critical unit operations, two units, are proposed in the model. This is to insure operating flexibility and reliability. Total wastewater flows in the Gum and Wood Chemicals Industry are characteristically low, generally less than 200,000 gpd. The parallel-train design is not normally used for treatment plants in the very low flow range because of economic consideration. However, standby items should be provided for key process functions.

FIGURE VIIIB-1

GUM AND WOOD CHEMICALS INDUSTRY
BPCTCA COST MODEL

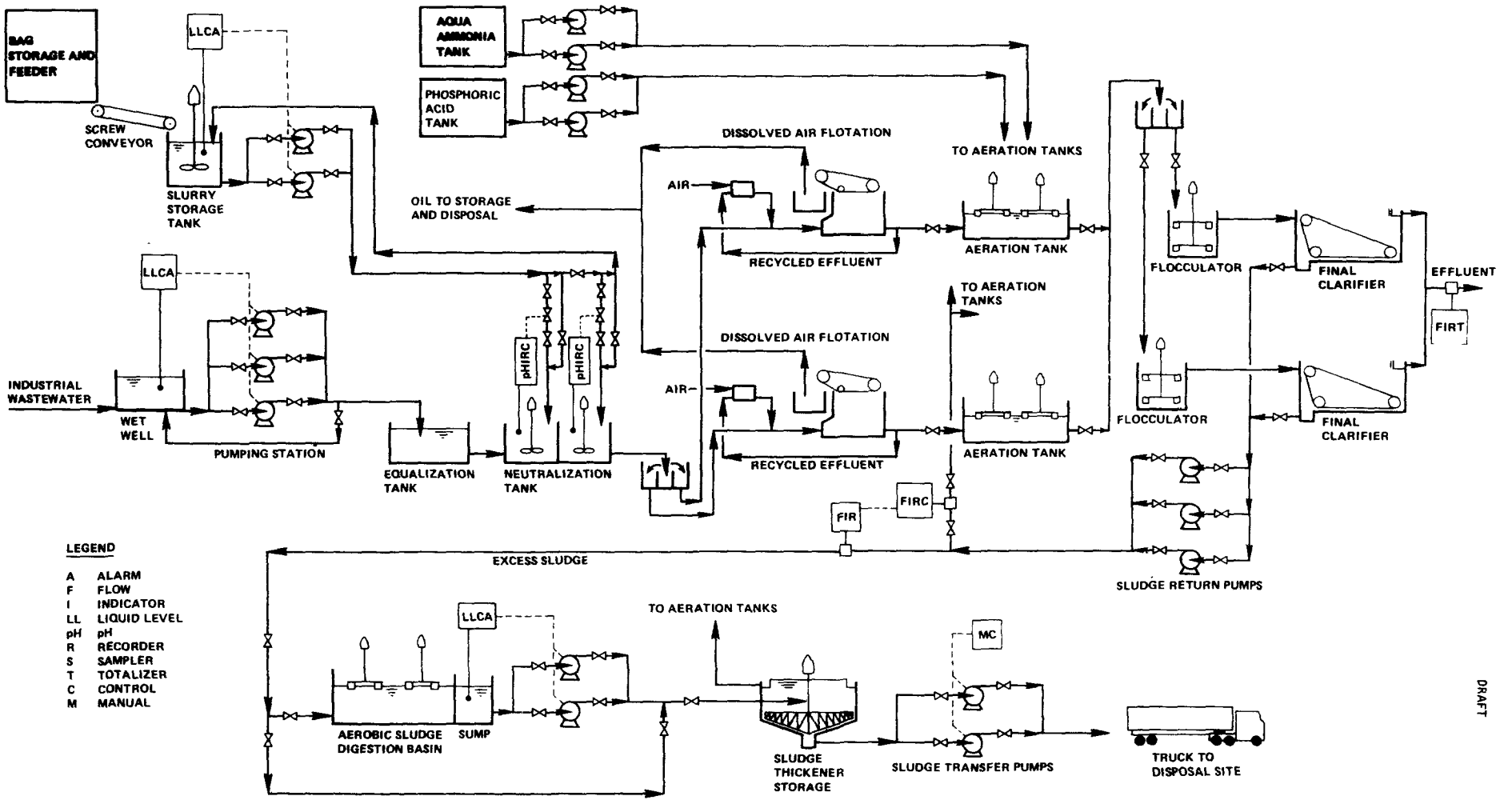

DRAFT

Table VIIIB-1

BPCTCA Treatment System Design Summary

Gum and Wood Chemicals Industry

Subcategory	Treatment System Hydraulic Loading (capacities covered, in gpd)
B	3,000
C	130,000
D	133,000
E	7,960[1]
F	2,300

Pump Station

Capacity to handle 200 percent of the average daily flow. Stand-by capability included, with minimum pump motor of 1/4 hp.

Equalization

One day detention time is provided for subcategories B,C and F. Two days are provided for subcategory E. Three days are provided for subcategory D. The basins are not provided with mixers to prevent oil and grease emulsification.

Neutralization

The two-stage neutralization basin is sized on the basis of a minimum detention time of 30 minutes. The lime-handling facilities are sized to provide 1,000 lbs of hydrated lime per MGD of wastewater for pH adjustment as needed in subcategories B, D, E, and F. Subcategory C requires no adjustment. Bag storage is provided for all plants. Lime addition is controlled by two pH probes, one in each basin. The lime slurry is added to the neutralization basin from a lime slurry recirculation loop. The lime-handling facilities are enclosed in a building.

Air Flotation

The air flotation units recommended for subcategories B, C, D and F are designed for oil and grease removal. They are sized on a rise rate of 1.5 gpm/ft^2 including recycle of 75 percent with a minimum 40 minute detention time. Air is provided for the units at a rate of 1.5 scf per 100 gallon recycle at 50 psig.

[1]Equalized flow is 5,680 gpd.

Table VIIIB-1
(continued)

Nutrient Addition

Facilities are provided for the addition of phosphoric acid and aqua ammonia to the biological system in order to maintain the ratio of BOD:N:P at 100:5:1.

Aeration Basin

Platform-mounted mechanical aerators are provided in the aeration basin. In addition, walkways are provided to all aerators for access and maintenance. The following data were used in sizing the aerators:

Energy oxygen	0.8 lb O_2/lb BOD removal
Endogenous oxygen	6 lb O_2/hr 1,000 lb MLVSS
Field Oxygen Transfer	2.0 lb O_2/hp-hr

Oxygen is monitored in the basins using D.O. probes. All aeration basins are sized using kinetics developed from treatability data for plants 2, A, B (see Table VIIB-2).

Secondary Clarifiers

All secondary clarifiers are rectangular units with a length-to width ratio of 4 to 1. The overflow rate varies between 40 and 400 gpd/sq. ft. depending on plant size. Sludge recycle pumps are sized to deliver 100 percent of the average flow.

Aerobic Digester

The aerobic digester is sized on the basis of a hydraulic detention time of 20 days. The sizing of the aerator-mixers is based on 165 hp/MG of digester volume.

Sludge Holding Tank - Thickener

A sludge-holding tank is provided for all plants, with sufficient capacity to hold 7 days flow from the aerobic digester. Facilities are included for discharge to tank trucks for hauling and disposal.

The topography of a particular plant site will dictate whether pumping is required. Equalization facilities are provided to minimize short-interval (e.g., hourly) fluctuations in the organic loading to the treatment plant to absorb loads from reactor cleanouts, accidental spills and other heavy loads, and to minimize the usage of neutralization chemicals. Equalization will provide for continuous (seven days per week) operation of the wastewater treatment facilities even though the manufacturing facilities operate only five days a week.

Since many of the gum and wood chemical waste streams are of low pH, neutralization may be necessary. Alkaline neutralization is provided in the form of hydrated lime storage and feed facilities. Since some of the subcategories have high oil RWL concentrations, dissolved air flotation was recommended.

An activated sludge process was selected for the biological treatment portion of the system. However, many of the gum and wood chemical plants are located in the southeastern United States, where aerated lagoons could provide a viable treatment alternative. However, to make the subsequent cost estimates universally applicable, activated sludge was selected.

The sludge handling scheme proposed in Figure VIIIB-1 was developed to handle anticipated small quantities of sludge. The aerobic digester will produce a nonputrescible sludge which can be thickened and stored before being trucked for either land spreading or to a regional treatment facility for dewatering.

BATEA Cost Model

For the purpose of the economic evaluation of BATEA on the Gum and Wood Chemicals industry, it was necessary to formulate a BATEA waste treatment model, which is presented in Figure VIIIB-2. The model includes dual media filtration followed by carbon adsorption of the BPCTCA biological treatment plant effluent. A summary of the general design basis used to size the unit processes is presented in Table VIIIB-2.

Dual media filtration was selected for the BATEA treatment model to minimize plugging of the carbon column during biological treatment plant upsets. The pulsed bed upflow carbon system was selected to minimize capital investment for a system with a relatively high carbon exhaustion rate compared to the carbon column inventory.

The BATEA waste treatment model in Figure VIIIB-2 shows the exhausted carbon being hauled to a sanitary landfill. This is because the amount of carbon exhausted per day is generally substantially less than 500 pounds/day, which is generally considered below the break-even point for on-site carbon regeneration.

FIGURE VIIIB-2

GUM AND WOOD CHEMICALS INDUSTRY
BATEA COST MODEL

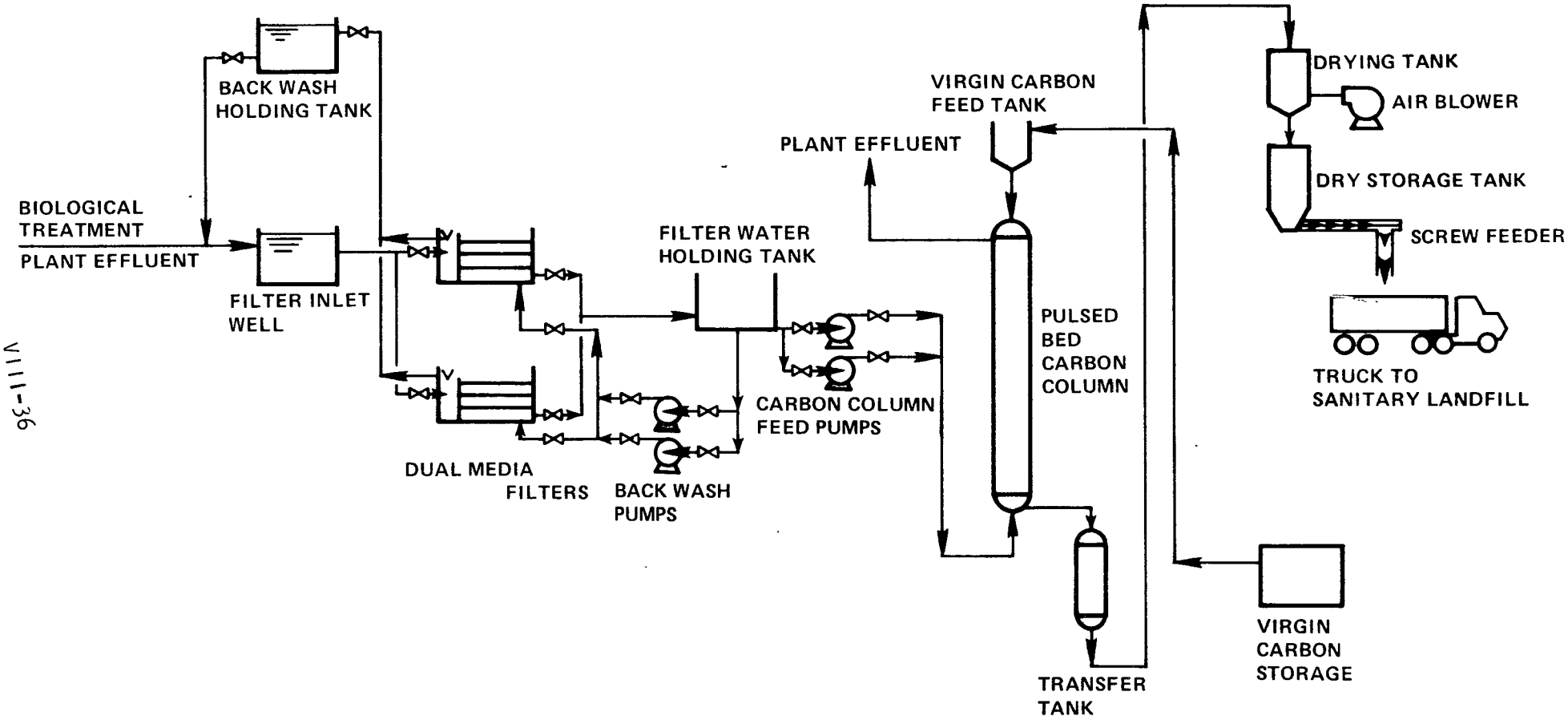

DRAFT

Table VIIIB-2

BATEA End-of-Pipe Treatment System Design Summary

Subcategory	Treatment System Hydraulic Loading (capacities covered, in gpd)
B	3,000
C	130,000
D	133,000
E	7,960[1]
F	2,300

Dual-Media Filtration

The filters are sized on the basis of an average hydraulic loading of 2 gpm/sq. ft. Backwash facilities are sized to provide rates up to 20 gpm/sq. ft. and for a total backwash cycle of up to 20 minutes in duration. The filter media are 24" of coal (1mm effective size) and 12" of sand (0.4-0.5 mm effective size).

Granular Carbon Columns

The carbon columns are sized on a hydraulic loading of 4 gpm/sq. ft. and a column detention time of 40 minutes. A backwash rate of 20 gpm/sq. ft. was assumed for 40 percent bed expansion at 70°F.

Backwash Holding Tank

Tankage is provided to hold the backwash water and decant it back to the treatment plant over a 24-hour period. This will eliminate hydraulic surging to the treatment units.

Virgin/Exhausted Carbon Storage

Tankage is provided to handle the virgin and exhausted carbon. A carbon exhaustion capacity of 0.6 lbs. COD/lb. carbon was used for design. The quantities of carbon exhausted based on the previous exhaustion capacity are not sufficiently large enough to warrant the investment in a regeneration furnace. For this reason the exhausted carbon is disposed of in a sanitary landfill as indicated in Figure VIIB-2.

[1]Equalized flow is 5,680 gpd.

BADCT Cost Model

The evaluation of the economic effects of the BADCT effluent limitations guidelines on the Gum and Wood Chemicals industry necessitated the formulation of a treatment model using a dual media filtration treatment system. A summary of the general design basis and proposed model is presented in the previous discussion on BATEA treatment systems.

COST

Capital and annual cost estimates were prepared for these end-of-pipe treatment models for five of the six subcategories. Subcategory A has a no discharge and therefore end-of-pipe treatment was not applicable. The prepared cost estimates are presented in Tables VIIIB-3 through VIIIB-7. The detailed cost breakdown by unit processes are included in the Supplement A (supporting document).

The costs presented in these tables are incremental costs for achieving each technology level. For example, in Table VIIIB-4, the total capital cost for biological treatment to attain BPCTCA effluent limitations is shown to be $1,390,000 for a plant producing 114,000 lbs/day of wood turpentine and rosin. The BPCTCA effluent limitations in Table VIIIB-4 were determined using the reduction factors presented in Section VII. The incremental capital costs for achieving the recommended BADCT effluent limitation is shown in Table VIIIB-4 to be $135,000. This cost would be in addition to the capital investment made to achieve the BPCTCA effluent limitation. In contrast the incremental cost for achieving the BATEA COD effluent limitation would be $403,000.

A discussion of the possible effects that variations in treatment technology or design criteria could have on capital and annual costs is presented in the General section.

ENERGY

The size ranges of the BPCTCA and BATEA treatment models preclude the application of some high energy-using unit processes such as sludge incineration and carbon regeneration. Therefore, the overall impact on energy should be minimal. Tables VIIIB-3 through VIIIB-7 present the cost for energy and power, for each treatment model for BPCTCA, BATEA and BADCT. The details for energy and power requirements are included in the Supplement A (supporting document).

Table VIIIB-3

Wastewater Treatment Costs for
BPCTCA, BADCT and BATEA Effluent Limitations
(ENR 1780 - August, 1972 Costs)

Gum Turpentine and Rosin - Subcategory B

	Technology Level			
	RWL	BPCTCA	BADCT[2]	BATEA[2]
Average Production 20.7 x 10^3 kg/day (45.6 x 10^3 lbs/day)	--	--	--	--
Production Days 365 days				
Wastewater Flow - kL/Day	11.4	--	--	--
(gpd)	(3,020)	--	--	--
kL/1,000 kg Product	0.528	--	--	--
(gal/1,000 lbs product)	(63.4)	--	--	--
BOD Effluent Limitation - kg BOD_5/1,000 kg product	4.44	0.22	0.20	0.066
mg/L	8,410	417	379	125
COD Effluent Limitation - kg COD/1,000 kg product	8.40	2.27	1.97	0.68
mg/L	15,900	4,300	3,730	1,290
Total Capital Costs	--	$566,000	$23,000	$184,000
Annual Costs				
Capital Recovery plus return at 10% @ 10 years	--	$ 92,200	$ 3,700	$ 30,000
Insurance and Taxes	--	11,400	400	3,200
Operating + Maintenance	--	29,800	1,600	21,000
Energy + Power	--	2,600	100	100
Total Annual Cost	--	$136,000	$ 5,800	$ 54,300
Cost[1] $/1,000 kg Product	--	$ 18	$ 0.77	$ 7.19
($/1,000 lbs Product)	--	($ 8.17)	($ 0.35)	($ 3.26)

[1]Cost based on total annual cost
[2]Incremental cost over BPCTCA cost

DRAFT

Table VIIIB-4

Wastewater Treatment Costs for
BPCTCA, BADCT and BATEA Effluent Limitations
(ENR 1780 - August, 1972 Costs)

Wood Turpentine and Rosin - Subcategory C

	Technology Level			
	RWL	BPCTCA	BADCT[2]	BATEA[2]
Average Production 51.8 x 10^3 kg/day (114 x 10^3 lbs/day)	--	--	--	--
Production Days 365 days				
Wastewater Flow - kL/Day	492	--	--	--
(gpd)	(130,000)	--	--	--
kL/1,000 kg Product	9.47	--	--	--
(gal/1,000 lbs product)	(1,140)	--	--	--
BOD Effluent Limitation - kg BOD_5/1,000 kg product	6.49	0.32	0.29	0.096
mg/L	685	34	31	10
COD Effluent Limitation - kg COD/1,000 kg product	12.6	3.40	2.96	1.02
mg/L	1,330	360	312	107
Total Capital Costs	--	$1,390,000	$135,000	$403,000
Annual Costs				
Capital Recovery plus return at 10% @ 10 years	--	$ 227,000	$ 22,000	$ 65,700
Insurance and Taxes	--	27,500	2,400	6,800
Operating + Maintenance	--	82,400	6,500	74,200
Energy + Power	--	13,100	100	300
Total Annual Cost	--	$ 350,000	$ 31,000	$147,000
Cost[1] $/1,000 kg Product	--	$ 18.5	$ 1.64	$ 7.77
($/1,000 lbs Product)	--	($ 8.40)	($ 0.75)	($ 3.53)

[1]Cost based on total annual cost
[2]Incremental cost over BPCTCA cost

DRAFT

Liquid waste incineration is a viable industry alternative for concentrated waste streams. The heating value of the particular waste dictates the auxiliary fuel requirement and thus these energy considerations must be evaluated on an individual basis.

NON-WATER QUALITY ASPECTS

The major non-water quality aspects of the proposed effluent limitations guidelines are ultimate sludge disposal, noise and air pollution.

The BPCTCA treatment model proposes land spreading of the digested biological sludge. If practiced correctly, this disposal method will not create health hazards or nuisance conditions. However, there is a widespread diversity of opinion over the effects of heavy metals on crop toxicity and in the food chain, and the possible nitrate contamination of the ground water. Carefully controlled sludge application should minimize these problems. The following are summaries of the biological sludge and exhausted carbon residue from the proposed BPCTCA and BATEA treatment facilities:

Subcategory	Biological Sludge Quantity (gallons/day)[1]	Exhausted Carbon Residue (cu yd/year)[2]
B	430	54
C	1,910	249
D	1,820	28
E	140	16
F	760	97

[1]Based on a 2 percent solids concentration.
[2]Dry weight basis.

Noise levels will not be appreciably affected with the implementation of the proposed treatment models. Air pollution should only be a consideration if liquid incineration were selected as the waste disposal alternative.

Table VIIIB-5

Wastewater Treatment Costs for
BPCTCA, BADCT and BATEA Effluent Limitations
(ENR 1780 - August, 1972 Costs)

Tall Oil Fractionation - Subcategory D

		Technology Level		
	RWL	BPCTCA	BADCT[2]	BATEA[2]
Average Production 104 x 10^3 kg/day				
(228 x 10^3 lbs/day)	--	--	--	--
Production Days 365 days				
Wastewater Flow - kL/Day	503	--	--	--
(gpd)	(133,000)	--	--	--
kL/1,000 kg Product	4.86	--	--	--
(gal/1,000 lbs product)	(583)	--	--	--
BOD Effluent Limitation - kg BOD/1,000 kg product	3.11	0.16	0.15	0.048
mg/L	640	32	31	10
COD Effluent Limitation - kg COD/1,000 kg product	7.08	1.91	1.66	0.57
mg/L	1,460	394	343	118
Total Capital Costs	--	$1,400,000	$137,000	$411,000
Annual Costs				
Capital Recovery plus return at 10% @ 10 years	--	$ 228,000	$ 22,300	$ 67,000
	--	28,300	2,400	6.800
Operating + Maintenance	--	83,200	6,700	81,900
Energy + Power	--	14,500	100	300
Total Annual Cost	--	$ 354,000	$ 31,500	$156,000
Cost[1] $/1,000 kg Product	--	$ 9.33	$ 0.83	$ 4.11
($/1,000 lbs Product)	--	($ 4.25)	($ 0.38)	($ 1.87)

[1]Cost based on total annual cost
[2]Incremental cost over BPCTCA cost

Table VIIIB-6

Wastewater Treatment Costs for
BPCTCA, BADCT and BATEA Effluent Limitations
(ENR 1780 - August, 1972 Costs)

Essential Oil - Subcategory E

	Technology Level			
	RWL	BPCTCA	BADCT[2]	BATEA[2]
Average Production - 486 kgs/day (1.07 x 10^3 lbs/day)	--	--	--	--
Production Days 260 days				
Wastewater Flow - kL/Day	30.1	--	--	--
(gpd)	(7,960)	--	--	--
kL/1,000 kg Product	62	--	--	--
(gal/1,000 lbs product)	(7,490)	--	--	--
BOD Effluent Limitation - kg BOD/1,000 kg product	70.8	3.54	3.26	1.06
mg/L	1,140	57	52	17
COD Effluent Limitation - kg COD/1,000 kg product	86.9	23.5	20.40	7.05
mg/L	1,400	378	329	113
Total Capital Costs	--	$ 460,000	$ 29,000	$ 199,000
Annual Costs				
Capital Recovery plus return at 10% @ 10 years	--	$ 75,000	$ 4,700	$ 32,400
Insurance and Taxes	--	9,100	500	3,400
Operating + Maintenance	--	26,100	2,200	14,500
Energy + Power	--	800	100	100
Total Annual Cost	--	$ 111,000	$ 7,500	$ 50,400
Cost[1] $/1,000 kg Product	--	$ 878	$ 59.4	$ 399
($/1,000 lbs Product)	--	($ 399)	($ 27.0)	($ 181)

[1]Cost based on total annual cost
[2]Incremental cost over BPCTCA cost

DRAFT

Table VIIIB-7

Wastewater Treatment Costs for
BPCTCA, BADCT and BATEA Effluent Limitations
(ENR 1780 - August, 1972 Costs)

Rosin Derivatives - Subcategory F

	Technology Level			
	RWL	BPCTCA	BADCT[2]	BATEA[2]
Average Production 27.8 x 10^3 kg/day (61.2 x 10^3 lbs/day)	--	--	--	--
Production Days 365 days				
Wastewater Flow - kL/Day	8.82	--	--	--
(gpd)	(2,330)	--	--	--
kL/1,000 kg Product	309	--	--	--
(gal/1,000 lbs product	(37.1)	--	--	--
BOD Effluent Limitation - kg BOD/1,000 kg product	4.40	0.22	0.20	0.066
mg/L	14,200	711	647	214
COD Effluent Limitation - kg COD/1,000 kg product	8.58	2.32	2.02	0.70
mg/L	27,800	7,510	6,540	2,260
Total Capital Costs	--	$ 674,000	$ 23,000	$ 184,000
Annual Costs				
Capital Recovery plus return at 10% @ 10 years	--	$ 110,000	$ 3,700	$ 30,000
Insurance and Taxes	--	12,600	400	3,200
Operating + Maintenance	--	36,500	1,600	30,500
Energy + Power	--	4,900	100	100
Total Annual Cost	--	$ 164,000	$ 5,800	$ 63,800
Cost[1] $/1,000 kg Product	--	$ 16.2	$ 0.57	$ 6.29
($/1,000 lbs Product)	--	($ 7.34)	($ 0.26)	($ 2.85)

[1]Cost based on total annual cost
[2]Incremental cost over BPCTCA cost

DRAFT

C. Pesticides and Agricultural Chemistry Industry

BPCTCA COST MODEL

General flow diagrams for the BPCTCA wastewater treatment facilities are shown in Figures VIIIC-1 through VIIIC-5. A summary of the general design basis is presented in Table VIIIC-1.

The following is a brief discussion of the treatment technology applicable to the individual subcategories and the rationale for selection of the unit processes included.

Model treatment systems for all subcategories include a biological treatment system preceded by various types of pretreatment, depending on the particuliar subcategory. Extensive pretreatment systems are required due to the toxic nature of many pesticide wastewaters.

Pretreatment Required

The type and arrangement of pretreatment processes varies from subcategory to subcategory; however, in general facilities include neutralization, alkaline hydrolysis, oil and solids separation, and metals removal.

The pH of raw process wastewaters flowing into the model biological treatment systems will potentially deviate from neutral conditions. In order to make the wastewater more amenable to biological treatment, neutralization facilities are provided for all subcategories.

Subcategory B (organo-phosphorous) wastes frequently contain contaminants that are slow to biodegrade and also exhibit toxic or inhibitory characteristics for biological treatment. Accordingly, detoxification of these species is required. Lime slurry is added to the waste in a rapid mix tank and the pH is raised to approximately 10. The waste passes from the mix tank to a settling tank where the lime solids settle out and are removed. The overflow proceeds to the detoxification unit.

The detoxification of organo-phosphorus wastes is based on extended heat treatment in an alkaline medium. The unit consists of a flow-through basin providing 8 to 24 hours of detention. The optimal pH range is usually 10 to 11, and caustic soda addition is frequently required to raise the pH above that produced by the lime precipitation process. Steam is injected into the detoxifier basin to maintain a temperature of approximately 100°F, and plastic bubbles should be kept on the water surface to reduce sensible and evaporative heat losses. Since subcategory E_1 wastes may contain organo-phosphorus contaminates, provisions for detoxification by alkaline hydrolysis have been provided.

FIGURE VIIIC-1

PESTICIDES AND AGRICULTURAL CHEMICALS INDUSTRY
BPCTCA COST MODEL
SUBCATEGORY A

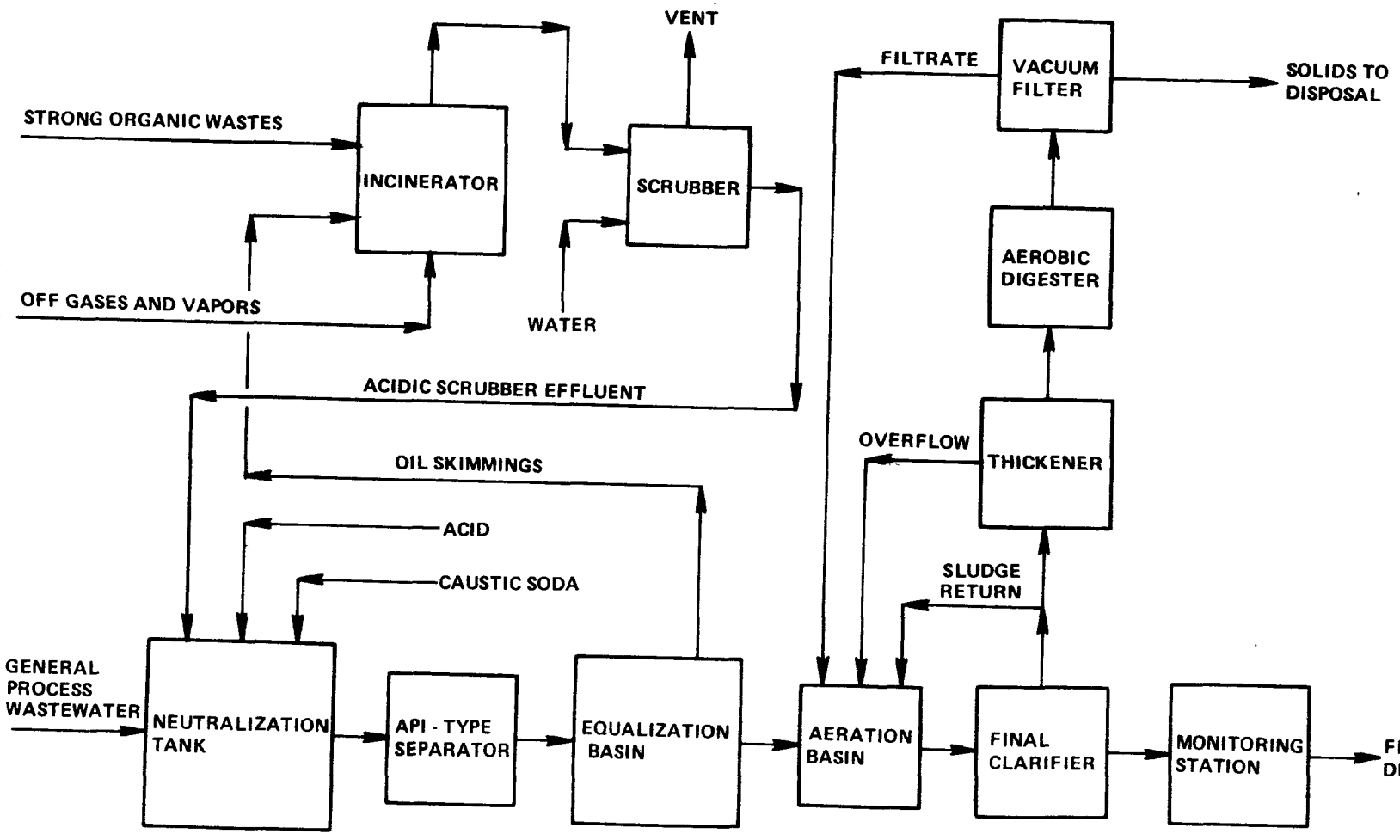

DRAFT

FIGURE VIIIC-2

PESTICIDES AND AGRICULTURAL CHEMICALS INDUSTRY
BPCTCA COST MODEL
SUBCATEGORY B

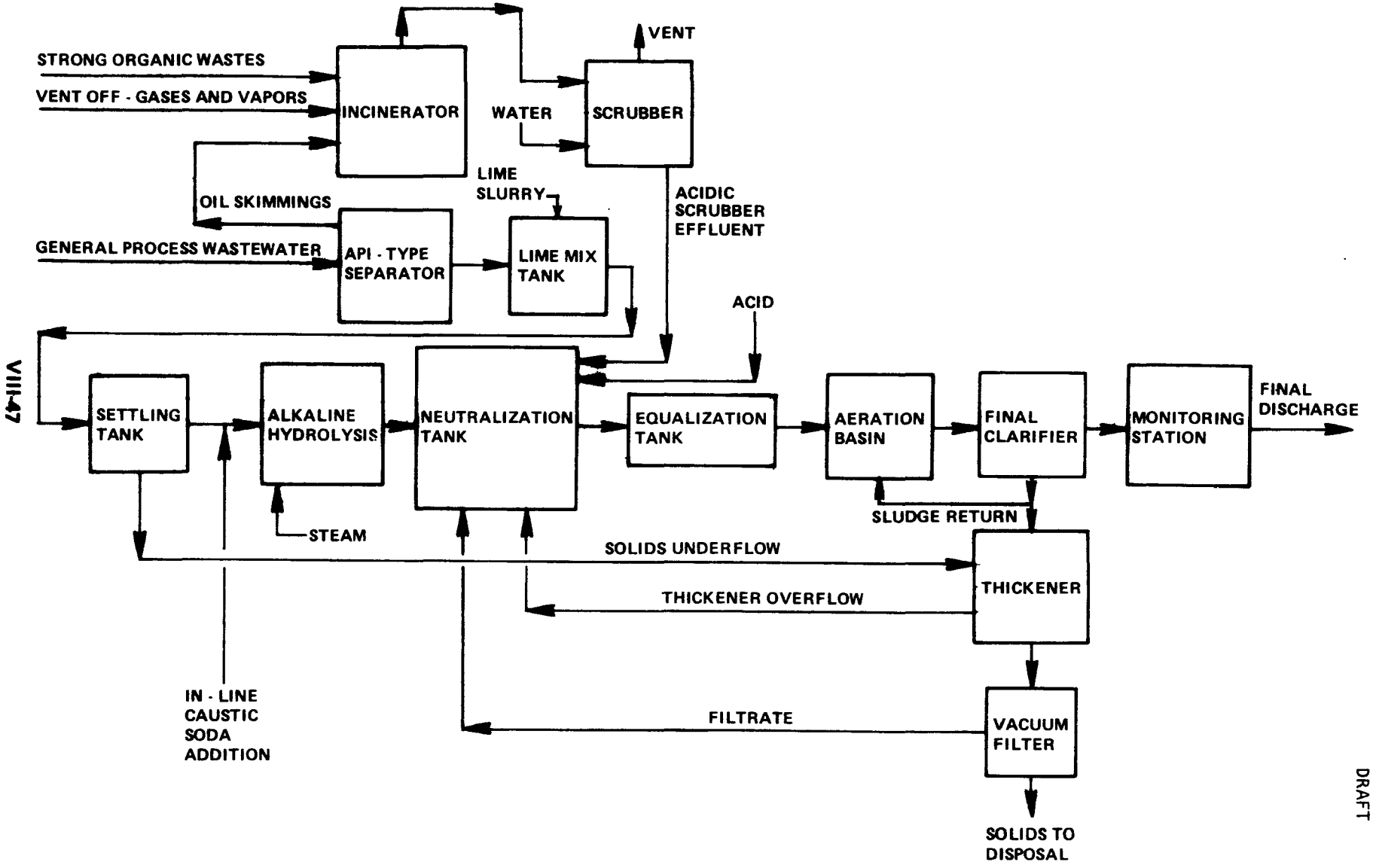

DRAFT

FIGURE VIIIC-3

PESTICIDES AND AGRICULTURAL CHEMICALS INDUSTRY
BPCTCA COST MODEL
SUBCATEGORY C

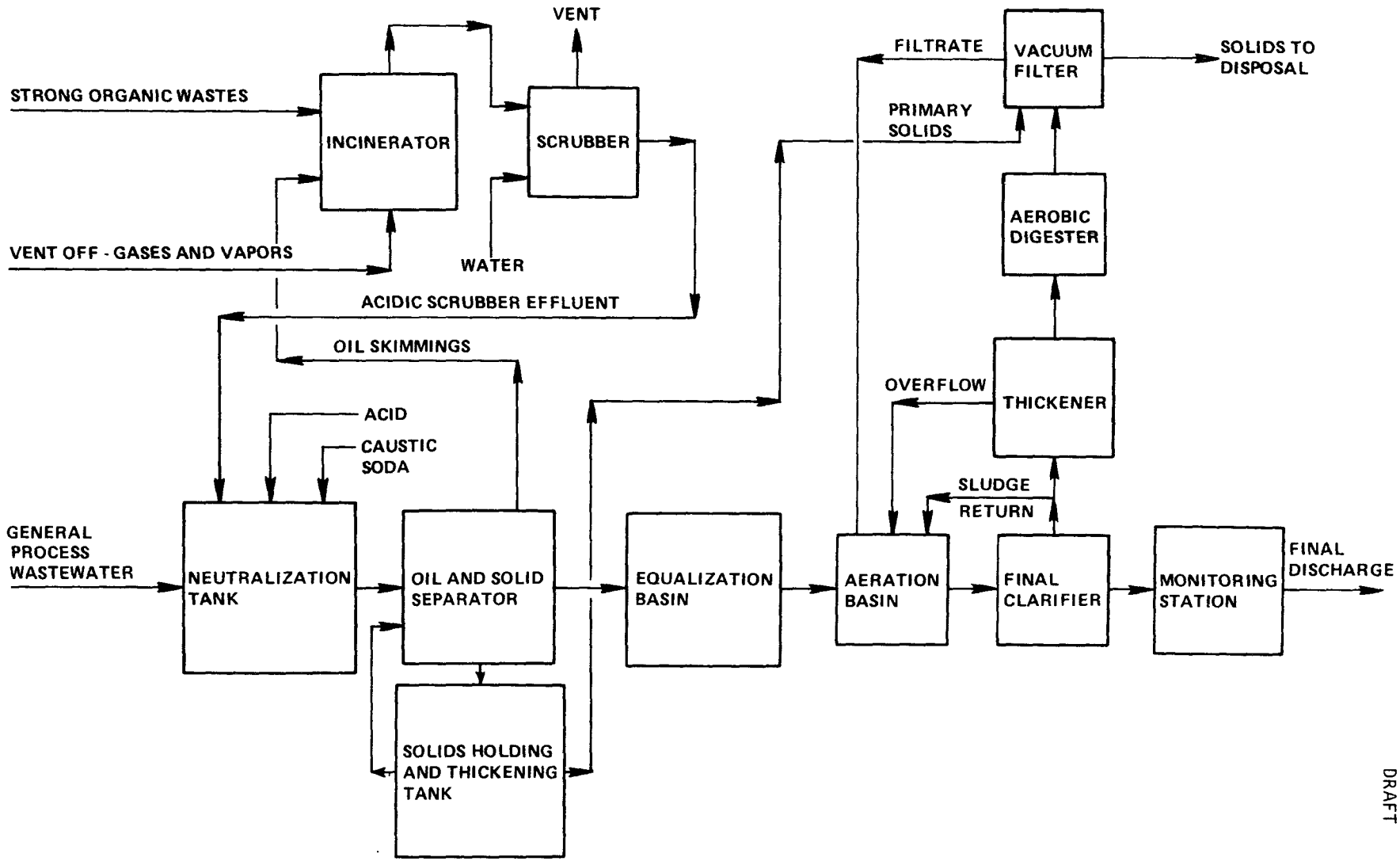

DRAFT

FIGURE VIIIC-4

PESTICIDES AND AGRICULTURAL CHEMICALS INDUSTRY
BPCTCA COST MODEL
SUBCATEGORY D

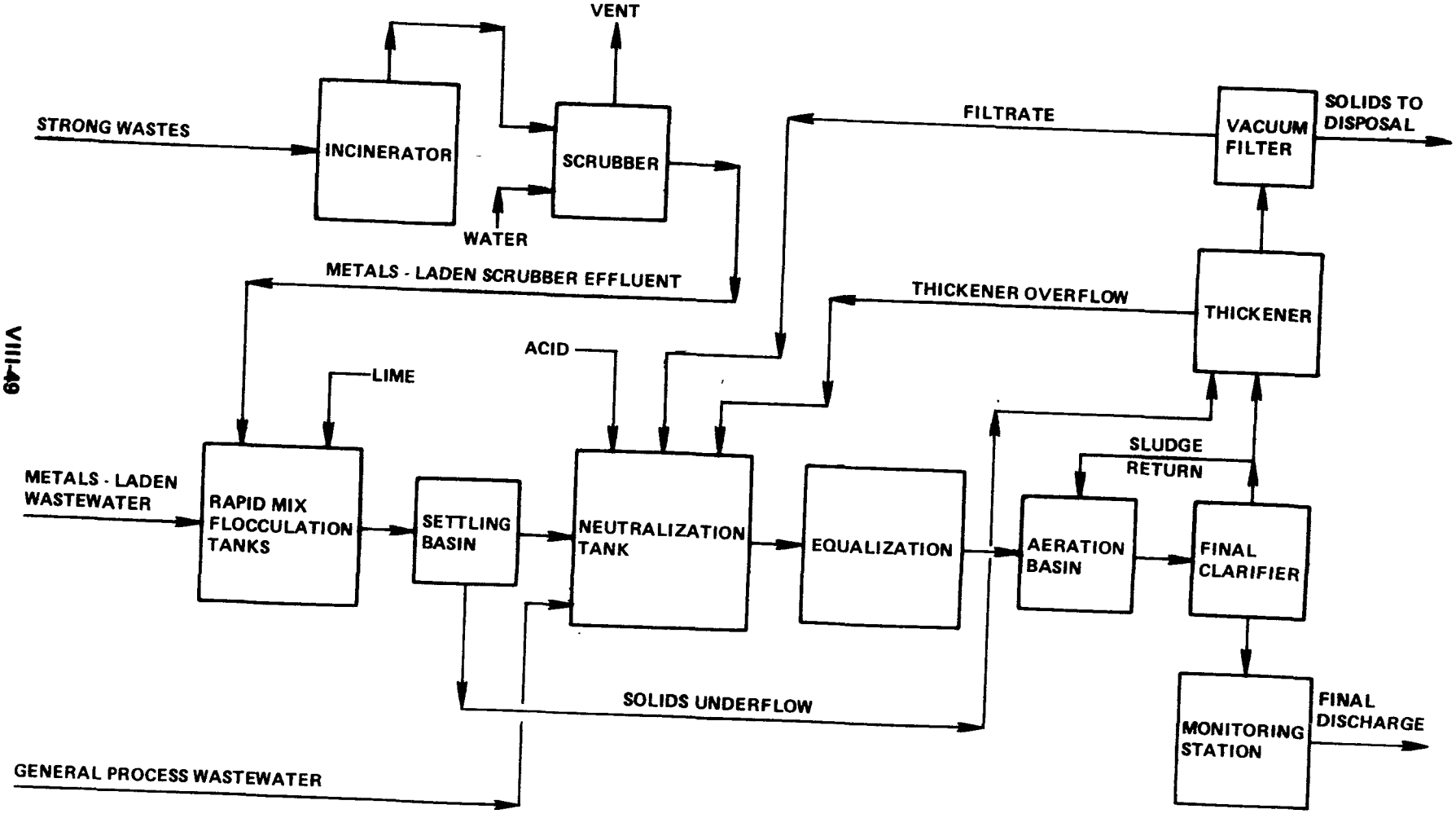

DRAFT

FIGURE VIIIC-5

PESTICIDES AND AGRICULTURAL CHEMICALS INDUSTRY
BPCTCA COST MODEL
SUBCATEGORY E (WATER - BASED)

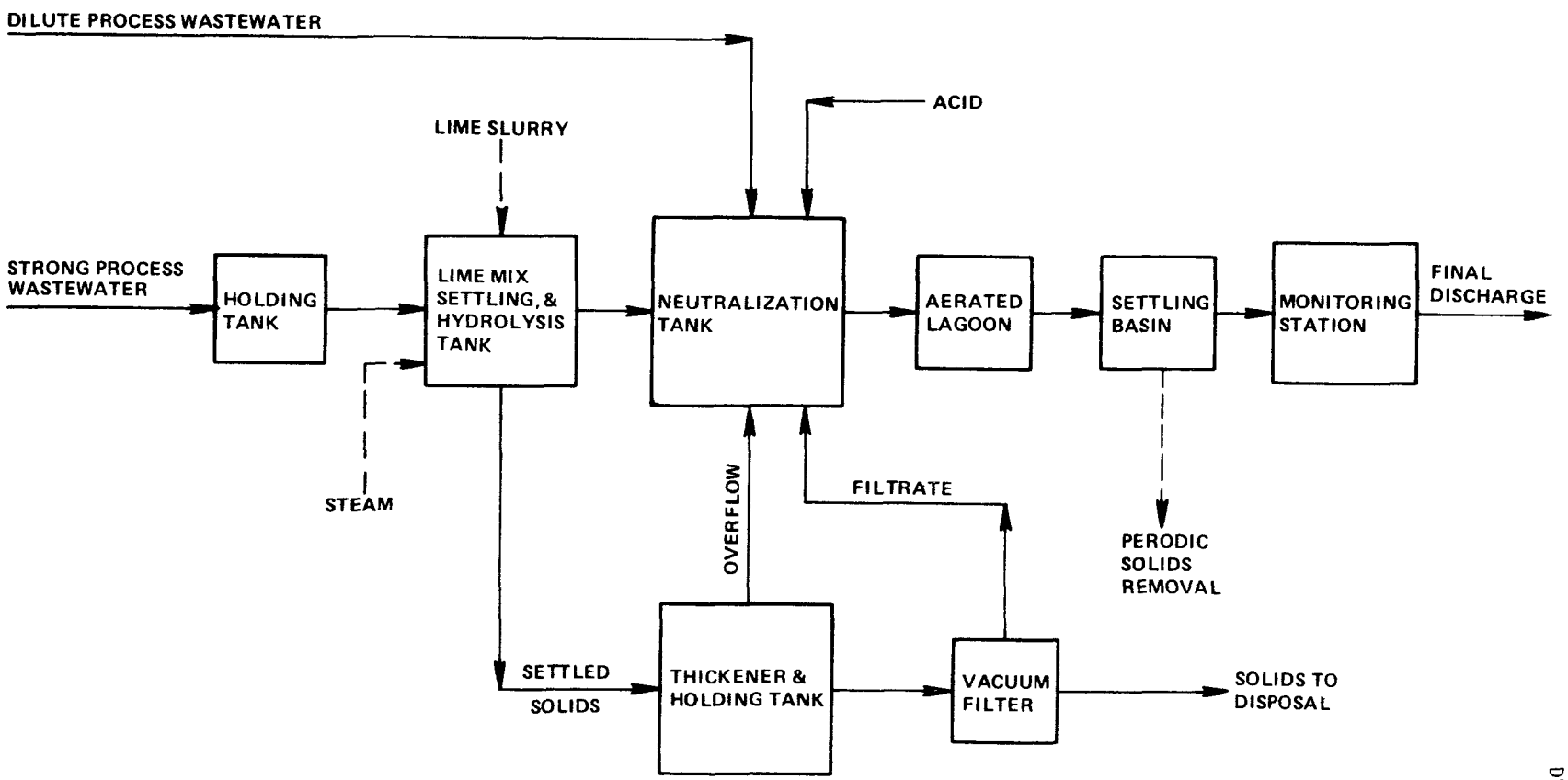

DRAFT

Table VIIIC-1

BPCTCA Treatment System Design Summary

Pesticides and Agricultural Chemicals Industry

Treatment System Hydraulic Loading
(Design Capacities)

Subcategory		Hydraulic Loading (gpd)	Hydraulic Loading (L/day)
A	Small Plant	66,000	250,000
A	Large Plant	350,000	1,320,000
B	Small Plant	76,000	288,000
B	Large Plant	812,000	3,070,000
C	Small Plant	88,300	334,000
C	Large Plant	1,080,000	4,090,000
D	Typical	120,000	454,000
E_1	Typical	16,000	60,600

API Seperators

The API type seperators are sized based on the following:

Temperate = 40°F

Rise rate of oil globules = 0.16 ft/min

Maximum allowable mean horizontal velocity = 2.4 ft/min

Detoxification Unit

Alkaline hydrolysis units for the purpose of detoxifying pesticide wastes are designed for a detention time of 12 hours and a length to width ratio of 5 to 1.

Table VIIIC-1
(Continued)

Incinerators

The design of incinerator is based strictly on flow as the heat release values of the waste are neglibible. Fuel requirements are based on a heat requirement of 1,000 BTU's/lb of waste.

Neutralization

The two-stage neutralization basin is sized on the basis of an average detention time of 10 minutes. The size of lime and acid handling facilities is determined according to acidity/alkalinity data collected during the survey. Bulk lime-storage facilities (20 tons) or bag storage is provided, depending on plant size. Sulfuric acid storage is either by 55-gallon drums or in carbon-steel tanks. Lime or acid addition is controlled by two pH probes, one in each basin. The lime slurry is added to the neutralization basin from a volumetric feeder. Acid is supplied by positive displacement metering pumps.

Equalization

Equalization basins for all plants are sized for a holding time of 36 hours.

Primary Flocculation Clarifiers

Primary flocculator clarifiers with surface areas less than 1,000 square feet are rectangular units with a length-to-width ration of 1 to 4. The

Table VIIIC-1
(Continued)

side water depth varies from 6 to 8 feet, depending on plant size, and the design overflow rate is 400 gpd/sq ft. Clarifiers with surface areas greater than 1,000 square feet are circular units. The side water depth varies from 7 to 13 feet, depending on plant size and the design overflow rate is 400 gpd/sq ft. Polymer addition facilities are provided.

Nutrient Addition

Facilities are provided for the addition of phosphoric acid and anhydrous ammonia to the biological system in order to maintain the ration of BOD:N:P at 100:5:1.

Aeration Basin

The size of aeration basins is based on detention times and food to micro-organism ratios commonly used within the industry. Mechanical surface aerators are provided in the aeration basin.

Aerators were selected on the basis of the following:

Oxygen Utilization: Energy	0.8 lb O_2/lb BOD removed
Oxygen Utilization: Endogenous	6 lbs O_2/hr/1,000 lbs MLVSS
Oxygen Transfer	3.5 lbs O_2/hr/shaft HP at 20°C and D.O. in tap water
Motor Efficiency	85 percent
Minimum Basin D.O.	2 mg/L
Minimum Number of Aerators	2

Oxygen is monitored in the basins using D.O. probes.

Table VIIIC-1
(Continued)

Sludge Thickener

The thickener provided was designed on the basis of a solids loading of 6 lbs/sq ft/day.

Aerobic Digester

The size of the aerobic digester is based on a hydraulic detention time of 20 days. The size of the aerator-mixers was based on an oxygen requirement of 1.6 lbs O_2/lb VSS destroyed and a mixing requirement of 165 HP/mg of digester volume.

Vacuum Filtration

The size of the vacuum filters was based on a cake yield of 2 lbs/sq ft/hr for biological sludge, and 4 lbs/sq ft/hr for combined primary and biological sludge. Maximum running times of 16 hours for large plants and 8 hours for small plants are used. The polymer system was sized to deliver up to 20 lbs of polymer per ton of dry solids.

Final Sludge Disposal

For all plants, sludge is disposed of at a sanitary landfill.

Design Philosophy

Individual units within the plant have been sized and arranged so that they may be taken out of operation for maintenance without seriously disrupting the operation of the plant.

Since subcategory A and B wastewaters can contain seperable organics which would interfere with downstream treatment processes, oils removal in an API type separator is needed. The separator can be rectangular or circular depending on land availability, flow, and other design considerations. The skimmed organics cannot be reclaimed in most cases and should be incinerated or containerized for disposal. Subcategory C wastes contain high suspended solids loadings in addition to oil and grease. Removal of both pollutants can be accomplished in a combination oil and solids separation. Skimmed oils, or organics, should be incinerated or containerized for disposal. Settled solids are held in a holding tank prior to dewatering with biological solids.

Subcategory D production facilities generate wastewaters containing metal, particularly heavy-metal components. The removal of the heavy metals is best accomplished on the undiluted metals-laden wastes prior to combination with general process wastewaters. The most common method for removing heavy metals is lime precipitation. The metals-laden wastewaters first pass through a rapid mix tank where lime and flocculating aids are added. The treated wastewater then proceeds to a flocculator where the metal/lime solids are flocculated to improve their settleability. The waste finally flows into a settling basin where the metal/lime precipitate is removed.

In addition to the pretreatment systems mentioned above for less concentrated process wastes, waste streams which are not compatible with biological treatment, such as distillation tower bottoms or tars, will be generated by all subcategories except E. The most applicable treatment for such wastes is incineration. The incinerator will burn principally liquid wastes, but it is possible that provisions will be necessary to incinerate toxic or polluting components from off-gases and vessel vents. The incinerator should be equipped with air pollution control devices, and the wastewater effluent from these units should be discharged to the wastewater treatment plant, potentially to the neutralization stage.

Biological Treatment

After pretreatment the plant wastewaters require equalization prior to biological treatment to equalize flow, organics, and toxic material surges. Equalization is best carried out in a mixed-concrete or concrete-lined basin. The size of the basin is dependent on the flow and contaminant loading patterns which, of course, are closely related to the production processes with particular consideration given to the batch-type operations.

For all subcategories except E_1, biological treatment consists of an activated sludge system. The overall activated sludge process includes aeration basins, final flocculator-clarifiers, and sludge handling facilities. Aerated lagoons were selected as the model treatment system for subcategory E_1 plants formulating water-based pesticides due to the relatively low and intermittant wastewater flows.

Sludge handling facilities for subcategory A and C plants consist of sludge thickening, aerobic digestion, and vacuum filtration. For subcategories B, E, and D aerobic digestion will not be required, as the sludge produced will contain a large amount of lime and should be relatively stable without digestion.

No model waste treatment facilities are provided for subcategory E_2 wastes since no discharge of process wastewater pollutants is recommended.

BATEA COST MODEL

In order to recommend further treatment technologies as candidates for BATEA, it is necessary to evaluate the residual characteristics of the effluents potentially produced by the proceeding technologies. In all cases, the significant characteristics remaining after application of the respective BPCTCA technologies are COD and TSS. The use of dual media filtration and activated carbon adsorption to treat biological treatment effluent has been shown to be an effective method for removing TSS and COD in other industries. Therefore, it is recommended that such technology be applied to the treatment of pesticide wastes. A generalized wastewater flow diagram for dual media filtration and activated carbon adsorption is shown in Figure VIIIC-6. A summary of the general design basis is presented in Table VIIIC-2.

In order to develop BATEA COD effluent criteria, a removal efficiency of 75 percent was judged to be reasonable. In addition, an effluent TSS concentration of 20 mg/L was judged to be obtainable by dual media filtration, based on inspection of data contained in Upgrading Existing Wastewater Treatment Plants (EPA 1974).

BADCT COST MODEL

The BADCT end-of-pipe treatment model used for economic evaluation of the proposed limitations includes the BPCTCA treatment model followed by dual media filtration. A typical flow diagram for the selected model treatment facilities is shown in Figure VIIIC-7 and a summary of the design basis is presented in Table VIII-3.

As discussed previously, the recommended effluent TSS value for dual media filtration is 20 mg/L.

FIGURE VIIIC-6

GENERAL WASTEWATER TREATMENT COST MODEL FOR MULTI-MEDIA FILTRATION AND ACTIVATED CARBON ADSORPTION

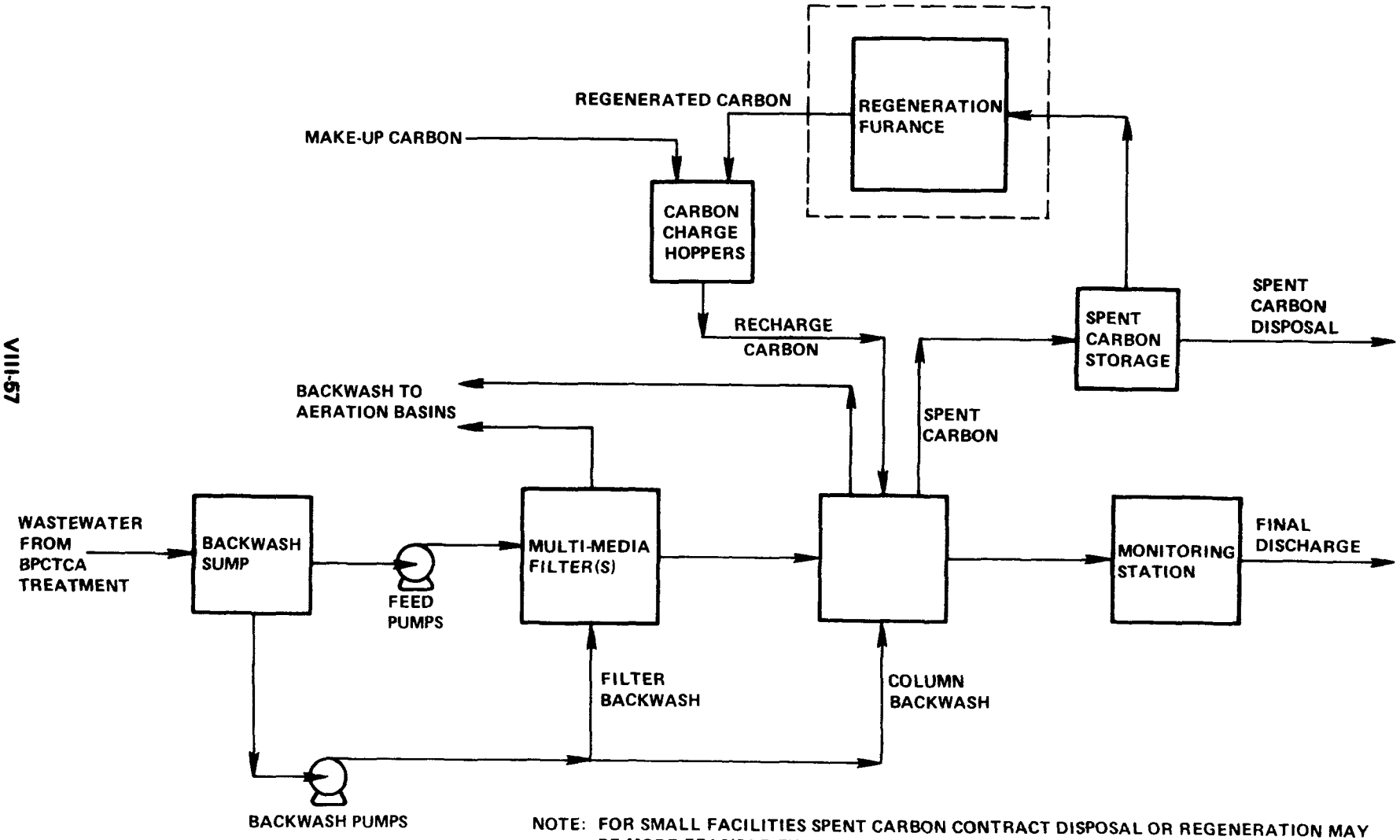

NOTE: FOR SMALL FACILITIES SPENT CARBON CONTRACT DISPOSAL OR REGENERATION MAY BE MORE FEASIBLE THAN ON-SITE REGENERATION.

DRAFT

Table VIIIC-2

BATEA Treatment System Design Summary

Dual-Media Filtration

The size of the filters is based on an average hydraulic loading of 3 gpm/sq ft. The size of backwash facilities provides rates up to 20 gpm/sq ft and a total backwash cycle of up to 10 minutes in duration. The filter media are 24" of anthrafelt (No. 1-1/2) and 12" of sand (0.4 - 0.5 mm Muscatine sand).

Filter-Column Decant Sump

Tankage is provided to hold the backwash water and decant it back to the treatment plant over a 24-hour period. This will eliminate hydraulic surging of the treatment units.

Granular Carbon Columns

The size of the carbon columns is based on a hydraulic loading of 4 gpm/sq ft and a column detention time of 30 minutes. A backwash rate of 20 gpm/sq ft was assumed for 50% bed expansion at 70°F.

Regeneration Furnace

A carbon exhaustion rate of 0.5 lb COD/lb carbon was used for the sizing of the regeneration facilities. A multiple-hearth furnace is employed for regeneration of the carbon and is designed for a carbon loading of 2.5 lbs/ft/hr and 5 days/week operation.

FIGURE VIIIC-7

PESTICIDES AND AGRICULTURAL CHEMICALS INDUSTRY
BADCT COST MODEL

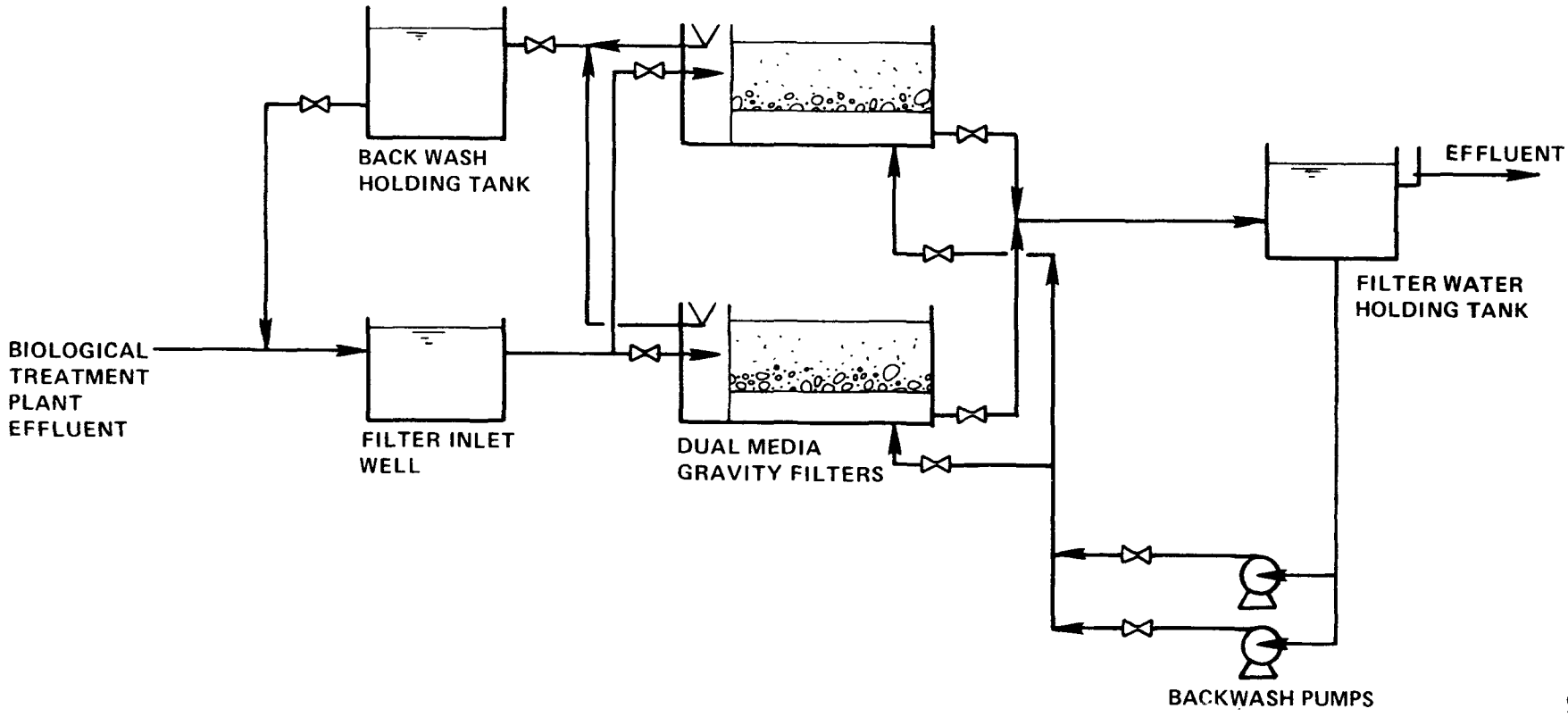

DRAFT

Table VIIIC-3

BADCT Treatment System Design Summary

Dual-Media Filtration

The size of the filters is based on an average hydraulic loading of 3 gpm/sq ft. The size of the backwash facilities should provide rates up to 20 gpm/sq ft and for a total backwash cycle of up to 10 minutes in duration. The filter media are 24" of anthrafelt (No. 1-1/2) and 12" of sand (0.4 - 0.5 mm Muscatine sand).

Filter-Column Decant Sump

Tankage is provided to hold the backwash water and decant it back to the treatment plant over a 24-hour period. This will eliminate hydraulic surging of the treatment units.

COST

The development of the cost for various treatment levels follows the procedure used for the other industries. For some categories, costs of treatment are presented for two plant sizes to indicate, where necessary, the effect of plant size on treatment cost. Tables VIIIC-4 through VIIIC-11 present the cost data for each subcategory. The detailed cost breakdown by unit processes are included in the Supplement A (supporting document).

ENERGY

For the Pesticides and Agricultural Chemicals Industry, the primary energy and power needs for BPCTCA level treatment are pumps, aerators, mixers and incineration fuel. Under BADCT, energy is needed for additional pumping requirements. Primary energy and power needs for BATEA include additional pumping and carbon regeneration furnace requirements. Tables VIIIC-4 through VIIIC-11 present the cost for energy and power, for each treatment models for BPCTCA, BATEA and BADCT. The details for energy and power requirements are included in the Supplement A (supporting document).

NON-WATER QUALITY ASPECTS

The major non-water quality considerations of the proposed treatment systems involve the use of alternative means of waste streams. The off-gases from incineration can be adequately scrubbed and controlled and the effluent discharged to the treatment system. Accordingly, the proposed treatment facilities do not have significant air quality impact.

Primarily, lime and biological sludges are all compatible with ultimate disposal in a sanitary landfill. Where necessary, biological solids can be adequately stabilized by digestion prior to landfill. The following table summarizes the sludge quantities generated by the model plants.

	Plant Size, gpd	lbs/day[1]
Subcategory A	(66,000)	1,200
	(350,000)	
B	(76,000)	2,400
	(812,000)	24,000
C	(88,300)	2,160
	(1,090,000)	14,900
D	(120,000)	5,140
E	(16,000)	200

[1]Dry weight basis

Other non-water quality aspects, such as noise levels, will not be perceptibly affected. Most pesticide plants in themselves generate relatively high noise levels, and the pumps, aerators, mixers, incineration equipment, etc., associated with in-plant or end-of-pipe wastewater control and treatment systems will not add significantly to these levels.

Table VIIIC-4

Wastewater Treatment Costs for
BPCTCA, BADCT and BATEA Effluent Limitations
(ENR 1780 - August, 1972 Costs)
Pesticides and Agricultural Chemicals industry - Halogenated
Organic Subcategory: Typical Small Plant

		Technology Level		
	RWL [2]	BPCTCA [4]	BADCT	BATEA
Average Production 17 kkg/day (38 x 10^3 lbs/day)	-	-	-	-
Production Days				
Wastewater Flow - kL/day (gpd)	250 (66,000)	-	-	-
kL/kkg product (gal/1,000 lbs product)	15 (1,740)	-	-	-
BOD_5 Effluent Limitation - kg BOD_5/kkg product[3]	62.7	0.44	0.44	0.15
mg/L	4,300	30	30	10
COD Effluent Limitation - kg COD/kkg product[3]	95.2	2.93	2.93	0.73
mg/L	6,520	200	200	50
Total Capital Costs		$1,590,000	$139,000	$254,000
Annual Costs				
Capital Recovery plus return at 10% at 10 years		259,000	23,000	41,000
Operating + Maintenance		128,000	8,000	47,000
Energy + Power		25,000	1,000	1,000
Total Annual Cost		$ 412,000	$ 32,400	$ 89,000
Costs/kkg Product (Costs[1]/1,000 lbs product)		66 (30)	4.4 (2)	13 (6)

[1] Cost based on total annual cost.
[2] Includes process wastes going to incineration and other disposal methods besides treatment.
[3] kg/kkg product is equivalent to lbs/1,000 lbs product.
[4] Cost includes cost of incineration of strong process wastewater streams.

DRAFT

Table VIIIC-5

Wastewater Treatment Costs for
BPCTCA, BADCT and BATEA Effluent Limitations
(ENR 1780 - August, 1972 Costs)
Pesticides and Agricultural Chemicals Industry - Halogenated
Organic Subcategory: Typical Large Plant

		Technology Level		
	RWL[2]	BPCTCA[4]	BADCT[2]	BATEA[2]
Average Production 91 kkg/day (200 x 10^3 lbs/day)	-	-	-	-
Production Days				
Wastewater Flow - kL/day (gpd)	1,320(350,000)	-	-	-
kL/kkg product (gals/1000 lbs product)	15 (1750)	-	-	-
BOD_5 Effluent Limitation - kg BOD_5/kkg product[3]	62.7	0.44	0.44	0.15
mg/L	4,300	30	30	10
COD Effluent Limitation - kg COD/kkg product[3]	95.2	2.93	2.93	0.73
mg/L	6,520	200	200	50
Total Capital Costs		$3,430,000	$279,000	$856,000
Annual Costs				
Capital Recovery plus return at 10% at 10 years		559,000	46,000	140,000
Operating + Maintenance		290,000	17,000	66,000
Energy + Power		125,000	2,000	11,000
Total Annual Cost		974,000	65,000	217,000
Costs/kkg Product (Costs[1]/1000 lbs product)		29 (13)	2.2(1)	6.6 (3)

[1] Cost based on total annual cost.
[2] Includes process wastes going to incineration and other disposal methods besides treatment.
[3] kg/kkg product is equivalent to lbs/1000 lbs product.
[4] Cost includes cost of incineration of strong process wastewater streams.

DRAFT

Table VIII C-6

Wastewater Treatment Costs for
BPCTCA, BADCT and BATEA Effluent Limitations
(ENR 1780 - August, 1972 Costs)
Pesticides and Chemicals Industry
Organo Phosphorus Subcategory: Typical Small Plant

	Technology Level			
	RWL [2]	BPCTCA [4]	BADCT[2]	BATEA[2]
Average Production 12 kkg/day (26 x 10^3 lbs/day)	-	-	-	-
Production Days				
Wastewater Flow - kL/day (gpd)	288 (76,000)	-	-	-
kL/kkg product gal/1,000 lbs product	24 (2,920)	-	-	-
BOD_5 Effluent Limitation - kg BOD_5/kkg product	24	0.73	0.73	0.24
mg/L	996	30	30	10
COD Effluent Limitation - kg COD/kkg product[3]	165	4.87	4.87	1.22
mg/L	6,820	200	200	50
Total Capital Costs		$1,810,000	$139,000	$273,000
Annual Costs				
Capital Recovery plus return at 10% at 10 years		295,000	23,000	45,000
Operating + Maintenance		151,000	8,000	52,000
Energy + Power		19,000	1,000	1,000
Total Annual Cost		465,000	32,000	78,000
Costs[1]/kkg Product (Costs[1]/1,000 lbs product)		108 (49)	6.6 (3)	22 (10)

[1] Cost based on total annual cost.
[2] Includes process wastes going to incineration and other disposal methods besides incineration.
[3] kg/kkg product is equivalent to lbs/1,000 lbs product.
[4] Cost includes cost of incineration of strong process wastewater streams.

DRAFT

Table VIIIC-7

Wastewater Treatment Costs for
BPCTCA, BADCT and BATEA Effluent Limitations
(ENR 1780 - August, 1972 Costs)
Pesticides and Agricultural Chemicals Industry
Organo Phosphorus Subcategory: Typical Large Plant

	Technology Level			
	RWL[2]	BPCTCA[4]	BADCT[2]	BATEA[2]
Average Production 126 kkg/day (278 x 10^3 lbs/day)	-	-	-	-
Production Days				
Wastewater Flow - kL/Day (gpd)	3,100 (812,000)	-	-	-
gal/1,000 lbs product	24 (2,920)	-	-	-
BOD_5 Effluent Limitation - kg BOD_5/kkg product[3]	24	0.73	0.73	0.24
mg/L	996	30	30	10
COD Effluent Limitation - kg COD/kkg product[3]	165	4.87	4.87	1.22
mg/L	6,820	200	200	50
Total Capital Costs		5,100,000	433,000	1,400,000
Annual Costs				
Capital Recovery plus return at 10% at 10 years		831,000	71,000	227,000
Operating + Maintenance		487,000	27,000	109,000
Energy + Power		174,000	3,000	12,000
Total Annual Cost		1,490,000	101,000	348,000
Cost[1] /kkg Product (Costs[1]/1,000 lbs product)		33 (15)	2.2(4)	6.6(3)

[1]Cost based on total annual cost
[2]Includes process wastes going to incineration and other disposal methods besides treatment.
[3]kg/kkg product is equivalent to lbs/1,000 lbs product.
[4]Cost includes cost of incineration of strong process wastewater streams.

DRAFT

Table VIIIC-8

Wastewater Treatment Costs for
BPCTCA, BADCT and BATEA Effluent Limitations
(ENR 1780 - August, 1972 Costs)
Pesticide and Agricultural Chemicals Industry
Organo Nitrogen Subcategory: Typical Small Plant

		Technology Level		
	RWL[2]	BPCTCA[4]	BADCT[2]	BATEA[2]
Average Production 11 kkg/day (24 x 10^3 lbs/day)	-	-	-	-
Production Days				
Wastewater Flow - kL/day (gpd)	333 (88,000)	-	-	-
L/kkg product (gals/1000 lbs product)	30 (3,670)	-	-	-
BOD_5 Effluent Limitation - kg BOD_5/kkg product[3]	61	0.92	0.92	0.31
mg/L	1,980	30	30	10
COD Effluent Limitation - kg COD/kkg product[3]	213	10.61	10.61	3.06
mg/L	6,910	350	350	100
Total Capital Costs		$1,700,000	$140,000	$448,000
Annual Costs				
Capital Recovery plus return at 10% at 10 years		276,000	23,000	73,000
Operating + Maintenance		136,000	9,000	37,000
Energy + Power		18,000	1,000	9,000
Total Annual Cost		$ 430,000	$ 33,000	$119,000
Costs/kkg Product (Costs[1]/1,000 lbs product)		108 (49)	6.6 (3)	31 (14)

[1] Cost based on total annual cost.
[2] Includes process wastes going to incineration and other disposal methods besides treatment.
[3] kg/kkg product is equivalent to lbs/1,000 lbs product.
[4] Cost includes cost of incineration of strong process wastewater streams.

DRAFT

Table VIIIC-9

Wastewater Treatment Costs for
BPCTCA, BADCT and BATEA Effluent Limitations
(ENR 1780 - August, 1972 Costs)
Pesticides and Agriculatural Chemicals Industry-
Organo Nitrogen Subcategory: Typical Large Plant

		Technology Level			
		RWL[2]	BPCTCA[4]	BADCT	BATEA
Average Production 133 kkg/day (292 x 10^3 lbs/day)		-	-	-	-
Wastewater Flow - kL/day (gpd)	4,100	(1,080,000)	-	-	-
kL/kkg product (gal/1,000 lbs product)	31	(3,700)	-	-	-
BOD_5 Effluent Limitation - kg BOD_5/kkg product[3]		.61	0.92	0.92	0.31
mg/L		1,980	30	30	10
COD Effluent Limitation - kg COD/kkg product[3]		213	10.6	10.6	3.06
mg/L		6,910	350	350	100
Total Capital Costs			4,780,000	514,000	1,760,000
Annual Costs			778,000	84,000	288,000
Capital Recovery plus return at 10% at 10 years			450,000	32,000	146,000
Operating + Maintenance			178,000	4,000	18,000
Energy + Power			1,410,000	120,000	452,000
Total Annual Cost			10,600	900	3,400
Costs[1]/kkg Product (Costs[1]/1,000 lbs product)			29 (13)	2.2 (1)	8.8 (4)

[1] Cost based on total annual cost
[2] Included process wastes going to incineration and other disposal methods besides treatment.
[3] kg/kkg product is equivalent to lbs/1000 lbs product.
[4] Cost includes cost of incineration of strong process wastewater streams.

DRAFT

TABLE VIIIC-10

Wastewater Treatment Costs for
BPCTCA, BADCT and BATEA Effluent Limitations
(ENR - 1780 - August, 1972 Costs)
Pesticides and Agricultural Chemicals Industry-
Metallo-Organic Subcategory

	Technology Level			
	RWL[2]	BPCTCA[4]	BADCT	BATEA
Average Production 7 kkg/day (15 x 10^3 lbs/day)	-	-	-	-
Wastewater Flow kL/day (gpd)	454 (120,000)	-	-	-
kL/kkg product (gals/1000 lbs product)	65 (8,000)	-	-	-
BOD_5 Effluent Limitation - kg BOD_5/kkg product[3]	34	2.0	2.0	0.67
mg/L	292	30	30	10
COD Effluent Limitation - kg COD/kkg product[3]	121	13.3	13.3	3.34
mg/L	1040	200	200	50
Total Capital Costs		1,830,000	160,000	477,000
Annual Costs				
Capital Recovery plus return @10%		298,000	26,000	78,000
at 10 years		173,000	10,000	13,000
Operating + Maintenance		11,000	1,000	9,000
Energy + Power		482,000	47,000	100,000
Total Annual Costs		68,900	6,700	14,300
Costs[1]/kkg Product (Costs[1]/1,000 lbs product)		194 (88)	15 (7)	40 (18)

[1] Cost based on total annual cost

[2] Includes process wastes going to incineration and other disposal methods as well as treatment.

[3] kg/kkg product is equivalent to lbs/1000 lbs product

[4] Cost includes cost of incineration of strong process wastewater streams.

DRAFT

Table VIIIC-11

Wastewater Treatment Costs for
BPCTCA, BADCT and BATEA Effluent Limitations
(ENR 1780 - August, 1972 Costs)
Pesticides and Agricultural Chemicals Industry
Formulators/Packagers Subcategory

	Technology Level			
	RWL[2]	BPCTCA[4]	BADCT[2]	BATEA[2]
Average Production 45 kkg/day (100 x 10^3/lbs/day)	-	-	-	-
Production Days				
Wastewater Flow - kL/day (gpd)	61 (16,000)	-	-	-
kL/kkg product (gals/1000 lbs product)	13 (160)	-	-	-
BOD_5 Effluent Limitation - kg BOD_5/kkg product[3]	0.3	0.04	0.04	0.013
mg/L	225	30	30	10
COD Effluent Limitation - kg COD/kkg product[3]	1	0.27	0.27	0.27
mg/L	749	200	200	50
Total Capital Costs		$849,000	$ 38,000	$135,000
Annual Costs				
Capital Recovery plus return at 10% at 10 years		138,000	6,000	22,000
Operating + Maintenance		77,000	2,000	21,000
Energy + Power		5,000	1,000	1,000
Total Annual Cost		220,000	81,000	44,000
Costs[1]/kkg Product (Costs[1]/1,000 lbs product)		13 (6)	2.2(1)	2.2(1)

[1] Cost based on total annual cost
[2] Includes process wastes going to incineration and other disposal methods besides treatment.
[3] kg/kkg product is equivalent to lbs/1,000 lbs product.
[4] Cost includes cost of incineration of strong Process wastewater streams.

DRAFT

D. Adhesives and Sealants Industry

This section provides quantitative cost information relative to assessing the economic impact of the proposed effluent limitations on the Adhesive and Sealants industry. A separate economic analysis of treatment cost impact on the industry will be prepared by another contractor and the results will be published in a separate document.

In order to evaluate the economic impact on a uniform treatment basis, end-of-pipe treatment models were proposed which will provide the desired level of treatment:

Technology Level	(Subcategory) End-Of-Pipe Treatment Model
BPCTCA	(A) Activated Sludge
	(B&C) Double Effect Liquid Evaporation
BATEA	(A) Two Stage Activated Sludge and Filtration
	(B&C) Double Effect Liquid Evaporation
BADCT	(A) Activated Sludge and Filtration
	(B&C) Double Effect Liquid Evaporation

BPCTCA Treatment Systems

Subcategory A

A general flow diagram for the BPCTCA wastewater treatment facilities for Subcategory A is shown in Figure VIIID-1.

A summary of the general design basis for this system is presented in Table VIIID-1.

The following is a brief discussion of the treatment technology available and the rationale for selection of the unit processes included in the described BPCTCA treatment system.

FIGURE VIIID-1

ADHESIVE & SEALANTS INDUSTRY
BPCTCA COST MODELS
(SUBCATEGORY A)

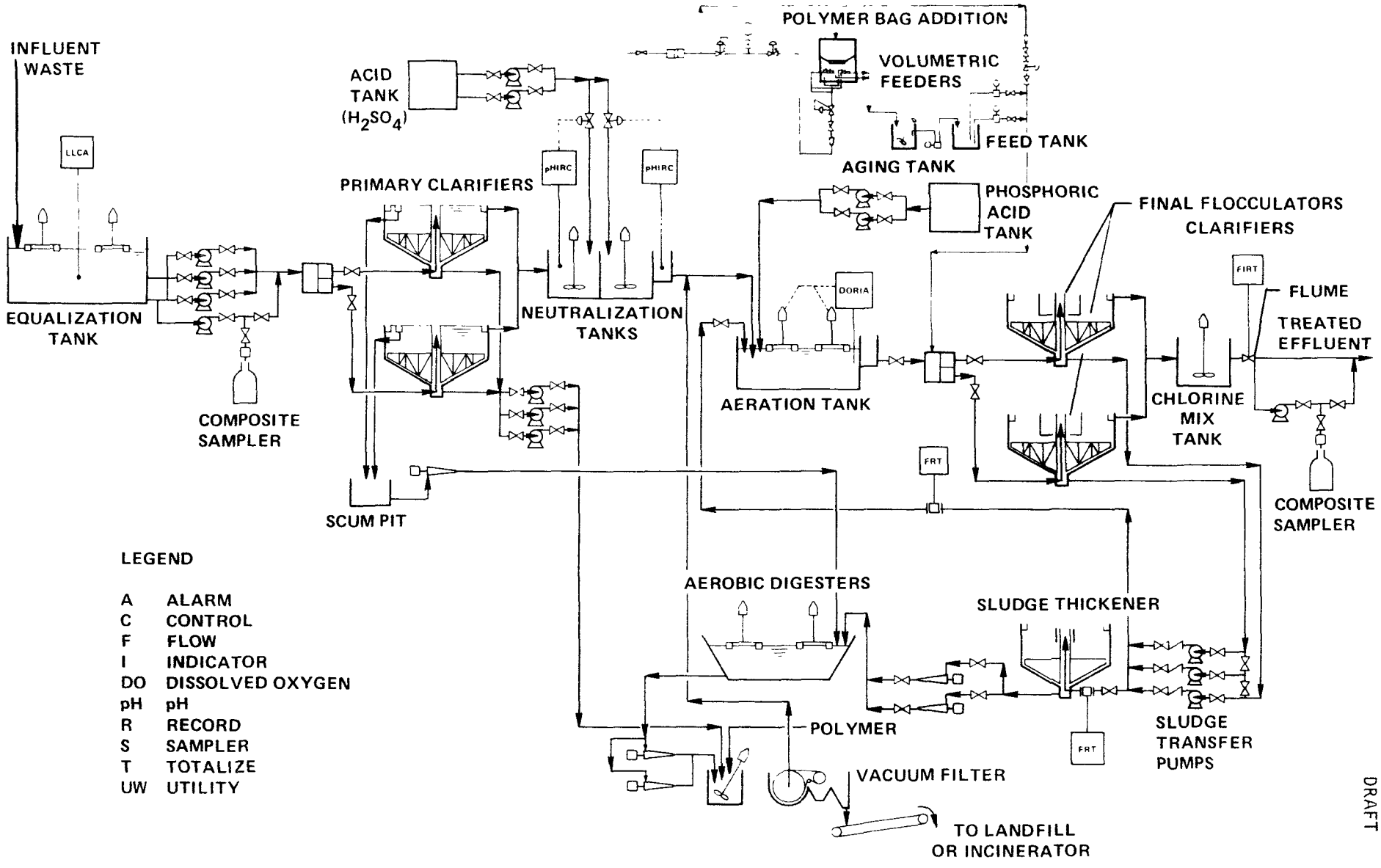

DRAFT

Table VIIID-1

BPCTCA Treatment System Design Summary
Adhesives and Sealants Industry
Subcategory A

Treatment System Hydraulic Loading: 4 mgd

Equalization

Two days of detention time are provided. Floating mixers are provided to keep the contents completely mixed.

Primary Clarifier

The primary clarifier is a circular reinforced concrete unit. The side water depth is ten feet and the overflow rate is 800 gpd/sq ft. Sludge recycle pumps are sized to withdraw sludge at 1.5 percent.

Neutralization

The size of the two-stage neutralization basin is based on an average detention time of twenty minutes. The sulfuric acid handling facilities are designed to add 9,700 lbs of sulfuric acid per mgd of wastewater, to adjust the pH. Bulk-storage facilities (based on 15 days usage) are provided. Sulfuric acid addition is controlled by two pH probes, one in each basin.

Nutrient Addition

Facilities are provided for the addition of phosphoric acid to the biological system in order to maintain the ratio of BOD:P at 100:1. There should be sufficient nitrogen concentrations in the wastewater to maintain the desired ratio of BOD:N of 100:5.

Aeration Basin

Platform-mounted mechanical surface aerators are provided in the aeration basins. Concrete walkways are provided to all aerators for access and maintenance. The following data were used in determining the size of the aerators.

Energy Oxygen	0.8 lbs O_2/lb BOD removed
Endogenous Oxygen	6 lbs O_2/hr/1000 lbs MLVSS under aeration
Minimum Basin D.O.	2 mg/L

Oxygen is monitored in the basins using D.O. probes.

Table VIIID-1
(continued)

Secondary Clarifiers

The secondary clarifiers are circular units with flocculator mechanisms. A flocculation time of 20 minutes is provided. The side water depth is 10 ft, and the overflow rate is 600 gpd/sq ft. Sludge recycle pumps are sized to deliver 50 percent of the average flow.

Sludge Holding Tank-Thickener

The thickener provided for this plant was designed on the basis of 6 lbs/sq ft/day and a side water depth of 10 ft.

Aerobic Digestor

The size of the aerobic digestor is based on a hydraulic detention time of 20 days. The size of the aerator-mixers was based on an oxygen requirement of 1.6 lbs O_2/lb VSS destroyed and mixing requirement of 165 HP/million gallons of digestor volume.

Vacuum Filtration

The size of the vacuum filters was based on a cake yield of 2 lbs/sq ft/hr and an average running time of 16 hrs/day. The polymer system was sized to deliver up to 20 lbs of polymer/ton dry solids.

Final Sludge Disposal

Sludge is disposed of at a sanitary landfill assumed to be 10 miles from the wastewater treatment facility.

Design Philosophy

The process units of the treatment model are designed for series flow except for the final clarifiers which are designed for parallel flow.

Equalization facilities are provided in order to minimize short-interval (e.g. hourly) fluctuations in the organic loading to the treatment plant, as well as to absorb slug loads from reactor cleanouts, accidental spills, and other high-level sources, and to minimize the usage of neutralization chemicals. A two-day detention time is provided, based on average flow. This detention time is provided to allow for the hydraulic and organic variability inherent in batch chemical production wastes. Also, this detention time will provide for continuous operation of the wastewater treatment facilities.

After equalization, it will be necessary to remove the suspended solids and chromium from the wastewater to make it more amenable to biological treatment. A primary clarifier will be used to remove the primary sludge, which will be pumped directly to the sludge conditioning tank prior to vacuum filtration. The sludge is a high lime content sludge and contains lime solids, lime soaps, grease, dirt, and hair. Past analyses have shown the chromium to be trivalent chromium, which can be precipitated at the high pH values of the raw wastewater (pH 11 to 12). The trivalent chromium will be removed with the primary sludge and go directly to the sludge dewatering system.

Neutralization will also be necessary to make the wastewater more amenable to biological treatment. Acid neutralization is provided in the form of sulfuric acid storage and feed facilities.

An activated sludge process was selected for the biological treatment portion of the system. This process was selected over aerated lagoons because of the nature and concentrations of pollutants in the wastewater to be treated. Both aerated lagoons and activated sludge processes involve aeration basins, but aerated lagoons normally discharge directly without a clarification step. This results in a much lower concentration of microorganisms in the aerated lagoon than in an activated sludge basin because the microorganism mass is not recirculated back to the aeration lagoon. Therefore, for comparable organic loadings, a much larger aerated lagoon would be required to provide treatment equivalent to that of an activated sludge plant. Also, the influent BOD_5 (approximately 4000 mg/L) to the treatment plant is high in protein content and thus high in organic-nitrogen.

In the biological process, for every pound of BOD_5 removed from a wastewater, approximately 0.6 pounds of TSS (biological solids) are produced which must be removed from the system. In the areas where aerated lagoons are applicable, settling lagoons are often used to separate these biological solids. In the activated sludge process, sludge wasting is done daily to dewatering facilities. Sludge removal is accomplished by allowing the solids to settle in flocculation clarifiers.

Sludge thickening is provided to concentrate the waste activated sludge before digestion. The sludge will be aerobically digested and removed by vacuum filtration. The sludge cake would then be acceptable for sanitary landfill or incineration. Filtrate from the vacuum filtration process will be returned to the aeration basins along with the thickener overflow.

Subcategories B and C

A general flow diagram for the BPCTCA wastewater treatment facilities for Subcategories B and C is shown in Figure VIIID-2. A summary of the general design basis for these subcategories is presented in Table VIIID-2, and a summary of the treatment system effluent requirements is presented in Table VIIID-3.

BATEA Treatment Systems

The BATEA treatment system recommended for subcategory A is a two-stage biological activated sludge treatment system followed by dual-media filtration. A general flow diagram for the BATEA treatment system for subcategory A is shown in Figure VIIID-3. A summary of the general design basis is presented in Table VIIID-4, and a summary of the treatment system effluent requirements is presented in Table VIIID-5. Possibilities of in-plant measures and recirculation of part of the treated effluent should be explored as a possible means of reducing the pollution loads.

The technology and effluent limitations guidelines applied for BPCTCA treatment systems in subcategories B and C are also applied for BATEA treatment systems.

BADCT Treatment Systems

The BADCT treatment system recommended for subcategory A is activated sludge followed by dual-media filtration. A general flow diagram for the BADCT treatment system for subcategory A is shown in Figure VIIID-4. A summary of the general design basis is presented in Table VIIID-6, and a summary of the treatment system effluent requirements is presented in Table VIIID-7.

The technology and effluent limitations guidelines applied for BPCTCA treatment systems in subcategories B and C are also applied for BADCT treatment systems.

FIGURE VIIID-2

ADHESIVE & SEALANTS INDUSTRY
BPCTCA COST MODEL
(SUBCATEGORIES B AND C)

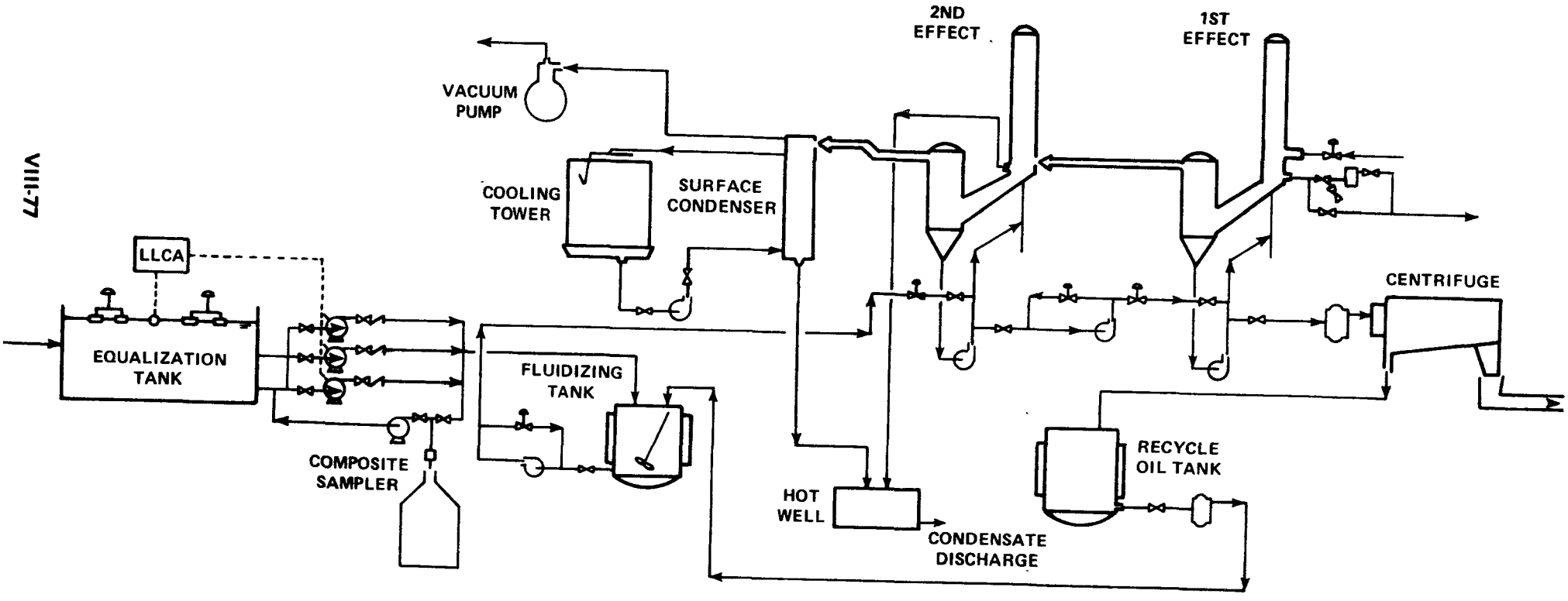

DRAFT

Table VIIIB-2

BPCTCA Treatment System Design Summary
Adhesive and Sealants Industry
Subcategories B and C

Treatment System Hydraulic Loadings

0.01 mgd - Subcategory B
0.006 mgd - Subcategory C

Equalization

Two days of detention time are provided. Floating mixers are provided to keep the contents completely mixed.

Evaporation System

The selection of evaporative equipment depends on the job requirement. In selecting the optimum number of effects, a balance has to be made between equipment costs and operating costs. Due to wastewater characteristics and operating conditions, double effect liquid evaporation was used. Heat-transfer area, operating conditions of each unit, and steam consumption were estimated.

Sludge Disposal

Sludge is disposed of at a sanitary landfill assumed to be 10 miles from the wastewater treatment facility.

Design Philosophy

Equalization of the wastewater for continuous flow to the evaporation system is required because of the intermittent discharges. The wastewater is pumped from the equalization basin to the fluidizing tank where it is mixed with recycle oil before it proceeds to the vapor chambers.

Table VIIID-3

BPCTCA End-of-Pipe Treatment System Requirements
Adhesives and Sealants Industry
Subcategories B and C

Parameter	Flow RWL kL/kkg (gal/1000 lbs) Product	RWL kg/kkg Product	Effluent kg/kkg Product	Effluent mg/L
Subcategory B				
BOD_5	0.94 (113)	3.4	0.24	287
COD	0.94 (113)	15.5	1.09	1300
TOC	0.94 (113)	5.0	-	-
TSS	0.94 (113)	3.1	-	20
Subcategory C				
BOD_5	0.34 (41)	4.4	0.31	910
COD	0.34 (41)	7.3	0.51	1530
TOC	0.34 (41)	1.4	-	-
TSS	0.34 (41)	0.01	-	20

DRAFT

FIGURE VIIID-3

ADHESIVE & SEALANTS INDUSTRY
BATEA COST MODEL
(SUBCATEGORY A)

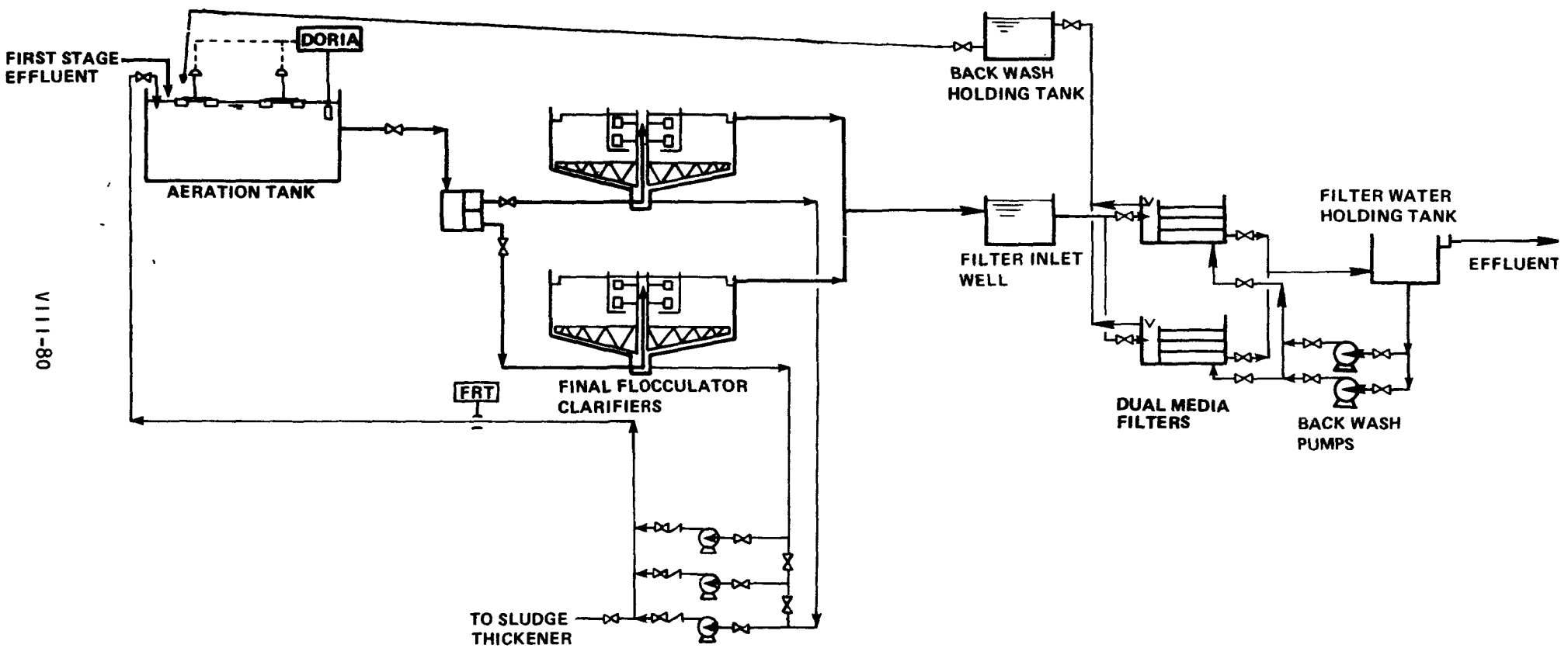

DRAFT

Table VIIID-4

BATEA Treatment System Design Summary
Adhesives and Sealants Industry
Subcategory A

Second Stage Aeration Basin

Platform-mounted mechanical surface aerators are provided in the aeration basin. Concrete walkways are provided to all aerators for access and maintenance. The following data were used in sizing the aerators.

Energy Oxygen	0.8 lbs O_2/lb BOD
Endogenous Oxygen	6 lbs O_2/hr/1000 lbs MLVSS under aeration
Minimum Basin D.O.	2 mg/L

Oxygen is monitored in the basins using D.O. probes.

Secondary Clarifiers

The secondary clarifiers are circular units with flocculator mechanisms. A flocculation time of 20 minutes is provided. The side water depth is 10 ft, and the overflow rate is 600 gpd/sq ft. Sludge recycle pumps are designed to deliver 50 percent of the average flow.

Sludge Holding Tank-Thickener

The thickener provided for this plant was designed on the basis of 6 lbs/sq ft/day and a side water depth of 10 ft.

Dual-Media Filtration

The size of the filters is based on an average hydraulic loading of three gpm/ft^2. Backwash facilities are designed to provide rates up to 20 gpm/ft^2 and for a total backwash cycle of up to 10 minutes in duration. The backwash water holding tanks are designed to hold two backwashes.

Table VIIID-5

BATEA End-of-Pipe Treatment System Requirements
Adhesives and Sealants Industry
Subcategory A

Parameter	Flow RWL kL/kkg (gal/1000 lbs) Product	BPCTCA Effluent kg/kkg[1] Product	BPCTCA Effluent mg/L	BATEA Effluent kg/kkg[1] Product	BATEA Effluent mg/L
BOD_5	250 (30,000)	66	-	33.6	100
COD	250 (30,000)	177	-	91	270
TSS	250 (30,000)	50	-	-	20

[1] kg/kkg product is equivalent to lbs/1000 lbs product

DRAFT

FIGURE VIIID-4

ADHESIVE & SEALANTS INDUSTRY
BADCT COST MODEL
(SUBCATEGORY A)

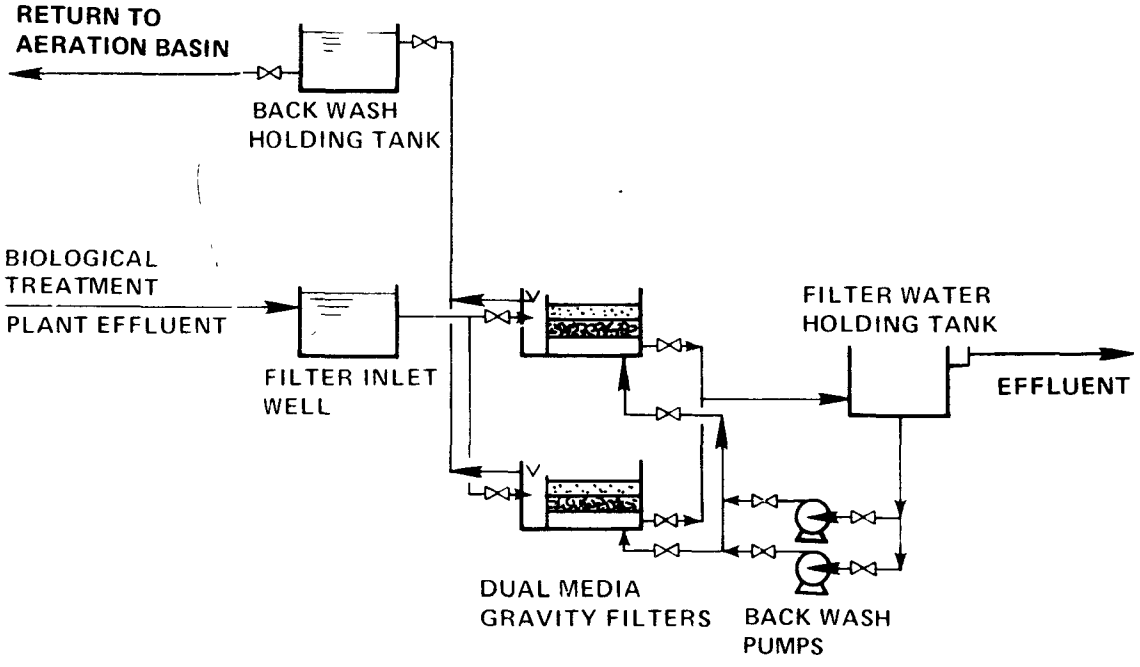

DRAFT

Table VIIID-6

BADCT Treatment System Design Summary
Adhesives and Sealants Industry
Subcategory A

Dual-Media Filtration

The size of the filters is based on an average hydraulic loading of three gpm/ft^2. Backwash facilities are sized to provide rates up to 20 gpm/ft^2 and for a total backwash cycle of up to 10 minutes in duration. The backwash water holding tanks are designed to hold two backwashes.

Table VIIID-7

BADCT End-of-Pipe Treatment System Requirements
Adhesives and Sealants Industry
Subcategory A

Parameter	Flow RWL kL /kkg (gal/1,000 lbs) Product	BPCTCA Effluent kg/kkg[1] Product	BPCTCA Effluent mg/L	BADCT Effluent kg/kkg[1] Product	BADCT Effluent mg/L
BOD_5	250 (30,000)	66	-	65.0	260
COD	250 (30,000)	177	-	170	676
TSS	250 (30,000)	50		--	20

[1] kg/kkg Product is equivalent to lbs/1,000 lbs Product

DRAFT

Cost

Capital and annual cost estimates were prepared for these end-of-pipe treatment models for three of the six subcategories. The prepared cost estimates are presented in Tables VIIID-8 through VIIID-10. The detailed breakdown by unit processes are included in the supplement A (Supporting Document).

The costs presented in these tables are incremental costs for achieving each technology level. For example, in Table VIIID-1, the total capital cost for biological treatment to attain BPCTCA effluent limitations is $10,600,000 for a plant producing 99,000 pounds per day of animal glue and gelatin. The BPCTCA effluent limitations in Table VIIID-1 were determined using the reduction factors presented in Section IX. The capital costs for achieving the recommended BATEA and BADCT effluent limitations for the plant producing 99,000 lbs/day of animal glue and gelatin are $1,600,000 and $480,000, to be added to the cost of BPCTCA treatment.

A discussion of the possible effects that variations in treatment technology or design criteria could have on capital and annual costs is presented in the General section.

Energy

The size of the BPCTCA and BATEA treatment models for subcategory A preclude the application of some high energy-using unit processes such as incineration and carbon regeneration. Therefore, the overall impact on energy for subcategory A should be minimal.

Each type of evaporator is suited to particular areas of performance. The selection of evaporative equipment depends on the job requirements. The amount of power required depends on the evaporative situation. In selecting the optimum number of effects, a balance has to be made between equipment costs and operating costs. If the addition of an effect will not pay for itself in lower steam costs within a certain period of time, the effect probably should not be added. Interrelationships between number of effects, capital cost, and steam usage can be developed.

Tables VIIID-8 through VIIID-10 present the cost for energy and power, for each of the treatment models for BPCTCA, BATEA and BADCT. The details for energy and power requirements are included in the Supplement A (supporting document).

Table VIIID-8

Wastewater Treatment Costs for
BPCTCA, BADCT and BATEA Effluent Limitations
(ENR 1780 - August, 1972 Costs)

Adhesive and Sealants Industry - Subcategory A

		Technology Level		
	RWL	BPCTCA	BADCT[2]	BATEA[2]
Average Production 45 kkg/day (99 x 10^3 lbs/day)				
Production Days 260 Days/Year				
Wastewater Flow - kL/Day	15,140			
(gpd)	(4×10^6)			
kL/kkg production	337			
(gal/1,000 lbs product)	(30,000)			
BOD Effluent Limitation - kg BOD/kkg product[3]	942	65.9	65	33.6
mg/L	3,770	265	260	100
COD Effluent Limitation - kg COD/kkg product[3]	2,520	177	170	91
mg/L	10,100	710	680	267
Total Capital Costs		$10,600,000	$480,000	$1,600,000
Annual Costs				
Capital Recovery plus return at 10% at 10 years		$ 1,730,000	$ 78,200	$ 261,000
Operating + Maintenance		990,000	29,000	96,000
Energy + Power		535,000	28,700	106,000
Total Annual Cost		$ 3,250,000	$135,900	$ 463,000
Cost[1] /kkg product		72,200	3,020	10,209
(Cost[1] /1,000 lbs Product)		($ 125)	($ 5.30)	($ 18.00)

[1]Cost based on total annual cost
[2]Incremental cost over BPCTCA cost
[3]kg/kkg production is equivalent to lbs/1,000 lbs product)

DRAFT

Table VIIID-9

Wastewater Treatment Costs for
BPCTCA, BADCT and BATEA Effluent Limitations
(ENR 1780 - August, 1972 Costs)
Adhesive and Sealants Industry - Subcategory B

		Technology Level		
	RWL	BPCTCA	BADCT[2]	BATEA[2]
Average Production 50 kkg/day (110 x 10^3 lbs/day)				
Production Days 260 Days/Year				
Wastewater Flow - kL/Day	38			
(gpd)	(10,000)			
kL/kkg product	0.8			
(gal/1,000 lbs product)	(113)			
BOD Effluent Limitation - kg BOD/kkg product[3]	3.4	0.24	0.24	0.24
mg/L	3,610	255	255	255
COD Effluent Limitation - kg COD/kkg product[3]	15.5	1.09	1.09	1.09
mg/L	16,500	1,160	1,160	1,160
Total Capital Costs		$412,000	--	--
Annual Costs				
Capital Recovery plus return at 10% at 10 years		$ 67,000	--	--
Operating + Maintenance		65,000	--	--
Energy + Power		57,000	--	--
Total Annual Cost		$189,000	--	--
Cost[1] /kkg product		3,780	--	--
Cost[1] /1,000 lbs Product)		($ 6.60)	--	--

[1]Cost based on total annual cost
[2]Incremental cost over BPCTCA cost
[3]kg/kkg product is equivalent to lbs/1,000 product

DRAFT

Table VIIID-10

Wastewater Treatment Costs for
BPCTCA, BADCT and BATEA Effluent Limitations
(ENR 1780 - August, 1972 Costs)

Adhesive and Sealants Industry - Subcategory C

	Technology Level			
	RWL	BPCTCA	BADCT[2]	BATEA[2]
Average Production 67 kkg/day (147 x 10^3 lbs/day)				
Production Days 260 Days/Year				
Wastewater Flow - kL/Day	23			
(gpd)	(6,000)			
kL/kkg product	0.3			
(gal/1,000 lbs product)	(41)			
BOD Effluent Limitation - kg BOD/kkg product[3]	4.4	0.31	0.31	0.31
mg/L	12,900	910	910	910
COD Effluent Limitation - kg COD/kkg product[3]	7.3	0.51	0.51	0.51
mg/L	21,500	1,500	1,500	1,500
Total Capital Costs		$324,000	--	--
Annual Costs				
Capital Recovery plus return at 10% at 10 years		$ 53,000	--	--
Operating + Maintenance		56,000	--	--
Energy + Power		30,000	--	--
Total Annual Cost		$139,000	--	--
Cost[1] /kkg product		2,075	--	--
Cost[1] /1,000 lbs Product)		($ 3.60)	--	--

[1]Cost based on total annual cost
[2]Incremental cost over BPCTCA cost
[3]kg/kkg product is equivalent to lbs/1,000 lbs product

DRAFT

Non-Water Quality Aspects

The major non-water quality aspects of the proposed effluent limitations are ultimate sludge disposal, noise and air pollution.

The BPCTCA treatment models propose disposal of sludge to sanitary landfills. If practiced correctly, this disposal method will not create health hazards or nuisance conditions.

The following table summarizes the sludge quantities generated by the model plants:

Subcategory	Pounds per Year[1]
A	58,400,000
B	125,000
C	1,250

[1] Dry-Weight Basis

Noise levels will not be appreciably affected with the implementation of the proposed treatment models. Air pollution should only be a consideration if liquid incineration is selected as the waste disposal alternative.

E. Explosives Industry

This section provides quantitative cost information relative to assessing the economic impact of the proposed effluent limitations on the Explosives industry.

In order to evaluate the economic impact on a uniform treatment basis, end-of-pipe treatment models were proposed based on design criteria that provide the desired level of treatment. A summary of the treatment models follow:

Technology Level	End-of-Pipe Treatment Model
BPCTCA	Activated Sludge
BADCT	Activated Sludge and Filtration
BATEA	Activated Sludge, Filtration, and Carbon Adsorption.

The treatment technology shown above is intended to attain the effluent limitations guidelines proposed. Individual plants may attain effluent limitations guidelines through in-plant controls or by different end-of-pipe treatment than is shown. The decision is left up to the manufacturer as to which is the most cost-effective.

BPCTCA Cost Model

To evaluate the economic effects of BPCTCA on the Explosives industry, a BPCTCA treatment model was developed. The treatment model is described in Table VIII-E1. As shown in Figure VIII-E1, there are two parallel treatment trains in the proposed system. This is to ensure operating flexibility and reliability. Treatment systems involving very low flow may not be able to use this parallel mode.

The following is a brief discussion of the treatment technology available and the rationale for the selection of the unit processes included in the described BPCTCA treatment system.

The topography of a particular plant site will dictate the type of pumping equipment required. Equalization facilities are provided in order to minimize short interval (e.g., hourly) fluctuations in the hydraulic loading to the treatment plant and to absorb organic sludge

Table VIIIE-1

BPCTCA Treatment System Design Summary
Explosives Industry

Equalization

For plants with less than 24 hour/day and 7 day/week production, a minimum holding time of 1.5 days is provided with continuous discharge from the equalization basin over 24 hours.

For plants with less than 24 hour/day and 5 days/week production, two day equalization is provided. Discharge from the basin will be continuous over the seven days. For plants with 24 hour/day and 7 day/week batch production, one day holding capacity is provided. For continuous processes (24 hours/day, 7 days/week) no equalization is required except under special cases.

Protective liners are provided, based on the following criteria:

Influent pH	Type of Liner Required
Greater than 6	No Lining
Between 4.0 and 6.0	Epoxy Coating
Between 2.0 and 4.0	Rubber or Polypropylene
Below 2.0	Acid Brick Lining

Neutralization

The size of the two-stage neutralization basin is based on an average detention time of 10 minutes. Lime and acid handling facilities are sized according to acidity/alkalinity data collected during the survey. Bulk lime-storage facilities (20 tons) or bag storage is provided, depending on plant size. Sulfuric acid storage is either by 55-gallon drums or in carbon-steel tanks. Lime or acid addition is controlled by two pH probes, one in each basin. The lime slurry is added to the neutralization basin from a volumetric feeder. Acid is supplied by positive displacement metering pumps.

Primary Flocculation Clarifiers

Primary flocculator clarifiers with surface areas less than 1,000 square feet are rectangular units with a length-to-width ratio of 1 to 4. The side water depth varies from 6 to 8 feet and the overflow rate varies between 600 and 800 gpd/sq ft depending on plant size. Clarifiers with surface areas greater than 1,000 square feet are circular units. The side water depth varies from 7 to 13 feet and the overflow rate varies between 600 and 800 gpd/sq ft, depending on plant size. Polymer addition facilities are provided.

Table VIIIE-1
(continued)

Nutrient Addition

Facilities are provided for the addition of phosphoric acid to the biological system to maintain the ratio of BOD:N:P at 100:5:1.

Aeration Basin/Aerated Lagoons

The size of the aeration basins is based on historical treatability data collected during the survey. Mechanical surface aerators are provided.

The necessary design criteria for the aeration basins are:

Oxygen Utilization:	Energy	0.8 lbs O_2/lb BOD removed
Oxygen Utilization:	Endogenous	6 lbs O_2/hr/1,000 lbs MLVSS
α		0.75
β		0.90
Oxygen transfer		3.5 lbs O_2/hr/shaft HP at 20°C and zero D.O. in tap water
Motor Efficiency		85 percent
Minimum Basin D.O.		2 mg/L

Oxygen is monitored in the basins using D.O. probes.

Secondary Flocculator Clarifiers

The design basis for secondary flocculator clarifiers is the same as discussed previously for primary flocculator clarifiers except for overflow rate. Secondary flocculator clarifiers are designed for an overflow rate of 600 gpd/sq ft. Feed facilities for anionic polymer addition are provided.

Sludge Thickener

The thickener provided was designed on the basis of a solids loading of 6 lbs/sq ft/day.

Aerobic Digester

The size of the aerobic digester was based on a hydraulic detention time of 20 days. The size of the aerator-mixers was based on an oxygen requirement of 1.6 lbs O_2/lb VSS destroyed and a mixing requirement of 165 HP/mg of digester volume.

Final Sludge Disposal

For small plants sludge is disposed of at a sanitary landfill. Sludge incineration facilities are provided for larger plants.

FIGURE VIIIE-1
COST MODEL
EXPLOSIVES INDUSTRY
BPCTCA WASTE TREATMENT MODEL

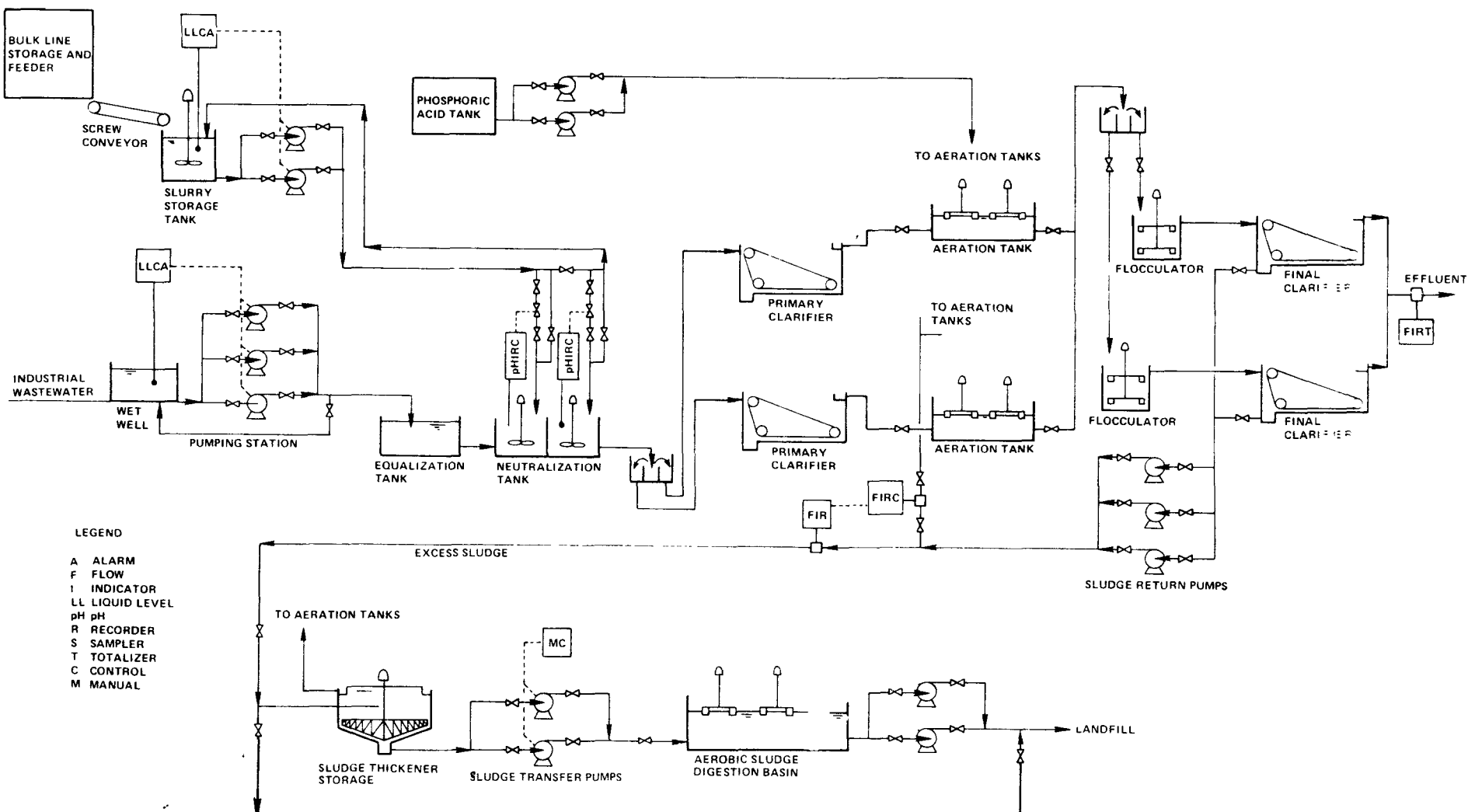

DRAFT

loads from reactor cleanouts and accidental spills and minimize the usage of neutralization chemicals. Equalization will provide continuous (seven days per week) operation of the wastewater treatment facilities even though the manufacturing facilities operate only five days a week.

Since many of the explosive waste streams have extreme values of pH, neutralization is necessary. Alkaline neutralization is provided in the model system in the form of hydrated lime storage and feed facilities.

An activated sludge process was selected for the biological treatment portion of the system. However, for plants located in the area with available land space, aerated lagoons with clarification could provide a viable treatment alternative. However, for the purpose of cost estimates, activated sludge was selected.

The sludge handling scheme is shown in Figure VIII-1. The aerobic digester will produce a nonputrescible sludge which can be thickened and stored before being trucked to a certified landfill.

It should be noted that the activated sludge process cannot be justified for the dilute waste streams of subcategory B. However, since most load and pack operations are part of larger plant operations which include manufacturing activities in the other subcategories, the same percentage removals were applied.

BATEA Cost Model

For the purpose of the economic evaluation of BATEA, it was necessary to formulate a BATEA waste treatment model (Table VIII-2). The model, composed of dual media filters and activated carbon adsorption, is presented in Figure VIIIE-2. It is intended that this model be added on to the BPCTCA treatment system.

Dual media filtration is intended to remove the suspended solids to avoid clogging of the activated carbon column. The down-flow fixed bed system was selected. Regeneration of activated carbon has been a problem in TNT waste streams, but no studies have shown it to be a problem in composite waste streams.

BADCT Cost Model

For the purpose of the economic evaluation of BADCT, a cost model (Table VIII-2) was formulated consisting of dual media filtration added on to the BPCTCA treatment system.

Table VIII-2

BATEA and BADCT Treatment System
Design Summary

Explosives Industry

Multimedia Filtration

Filters were sized using the criteria of 3 gpm/sq ft. Backwash rates used were 20 gpm/sq ft for 10 minute duration.

Carbon Adsorption

The unit is designed as a downflow fixed bed. Pretreatment for removal of suspended solids is provided so as to thwart clogging of the carbon column. Carbon contact time was set at 30 minutes. Hydraulic loading rates used were 4 gpm/sq ft. The spent carbon to be regenerated was calculated on a 0.5 lb of COD/lb carbon The regeneration furnace itself was designed for 2.5 lbs/sq ft/hr.

FIGURE VIIIE-2

EXPLOSIVES INDUSTRY STURY
BATEA COST MODEL

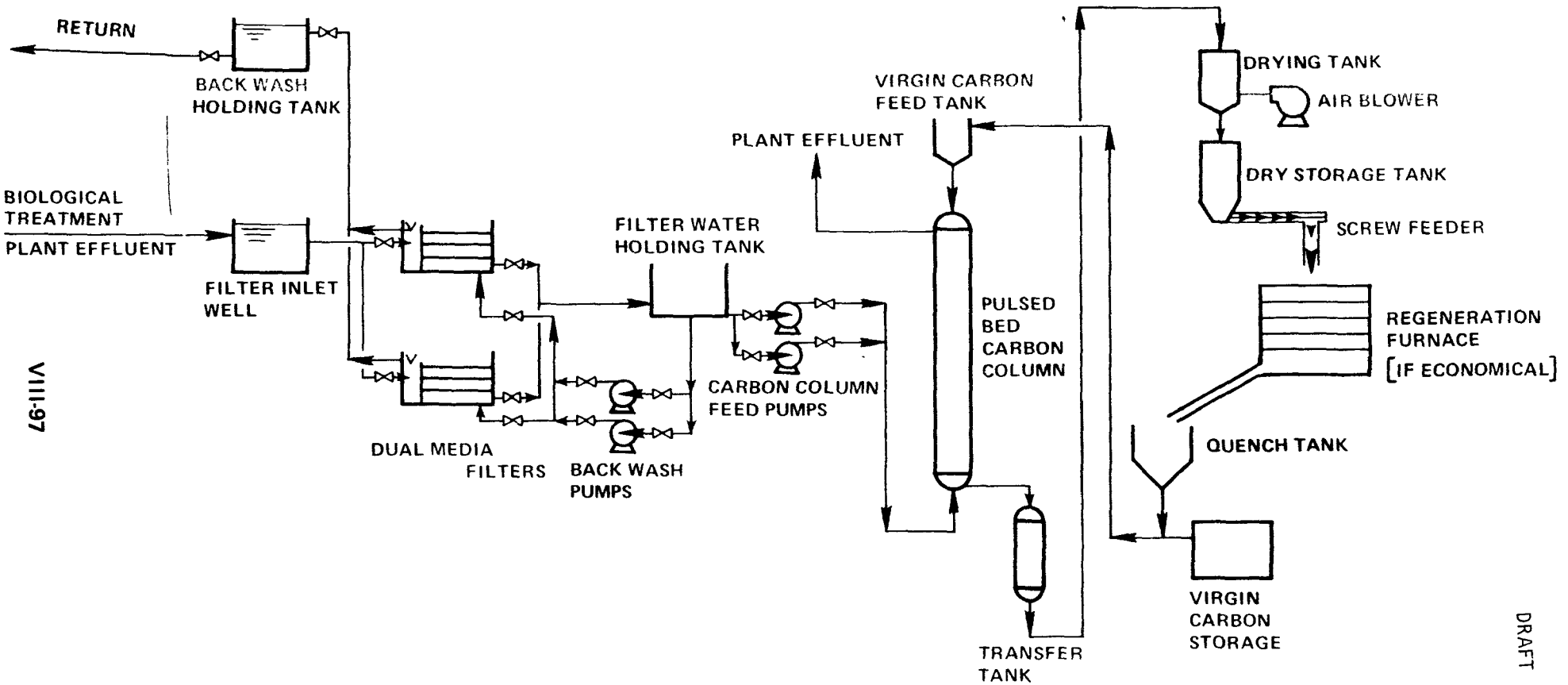

DRAFT

Cost

Capital and annual cost estimates were prepared for the previous end-of-pipe treatment models for all subcategories. The prepared cost estimates are presented in Tables VIIIE-1 through VIIIE-4. The costs presented in these tables are incremental costs for acheiving each technology level. The detailed cost breakdown by unit processes are included in the Supplement A (supporting document).

For example, in Table VIIIE-1, the total capital cost for subcategory A to attain BPCTCA effluent limitations is $192,000 for a plant producing an average of 112,000 pounds of explosive per day. The BPCTCA effluent limitations in Table VIIIE-1 were determined using the reduction factors presented in Section VII.

The incremental capital costs for achieving the recommended BADCT effluent limitation in Table VIIIE-1 would be in addition to the capital investment made to achieve the BPCTCA effluent limitation. Similarly, the incremental cost for achieving the BATEA effluent limitation for subcategory A_1 would be $1,180,000.

A discussion of the possible effects that variations in treatment technology or design criteria could have on capital and annual costs is presented in the General section.

Energy

The size ranges of the BPCTCA and BATEA treatment models preclude the application of some high energy-using unit processes such as sludge incineration. Carbon regeneration will require significant amounts of energy; however, the overall impact on energy consumption should be minimal. Tables VIIIE-3 through VIIIE-6 present the cost for energy and power, for each treatment model for BPCTCA, BATEA and BADCT. The details for energy and power requirements are included in Supplement A (supporting document).

Non-Water Quality Aspects

The major non-water quality aspects of the proposed effluent limitations encompass ultimate sludge disposal, noise and air pollution.

The BPCTCA treatment model proposes land spreading of the digested biological sludge. If practiced correctly, this disposal method will not create health hazards or nuisance conditions. The possibility of trace explosives leaching into groundwater reservoirs can be minimized by carefully controlled sludge application. The following are summaries of the biological sludge from proposed BPCTCA and BATEA treatment facilities:

Subcategory	Biological Sludge Quantity lbs/day[1]
A1	17,600
A2	33,000
B	5,360
C	480

[1]Based on solids concentration (dry weight basis)

Noise levels will not be appreciably affected with the implementation of the proposed treatment models. Air pollution should only be a consideration if liquid incineration were selected as the waste disposal alternative.

Wastewater Treatment Costs for
BPCTCA, BADCT and BATEA Effluent Limitations
(ENR 1780 - August, 1972 Costs)

Explosive Industry - Subcategory A1

		Technology Level			
		RWL	BPCTCA	BADCT[2]	BATEA[2]
Average Production	36.2 x 10^3 kg/day (79.6 x 10^3 lbs/day)				
Production Days	260				
Wastewater Flow - kL/Day (gpd)	61 (16,000)				
kL/1,000 kg Product (gal/1,000 lbs)		1.68 (201)			
BOD Effluent Limitation - kg BOD/1,000 kg product[3]		1.46	.111	.0971	.0291
mg/L[4]		871	.61	.55	.17
COD Effluent Limitation - kg COD/1,000 kg product[3]		3.87	1.10	.961	.231
mg/L[4]		2310	647	560	137
Total Capital Costs			$ 192,000	$ 35,200	$108,000
Annual Costs					
Capital Recovery plus return at 10% at 10 years			$ 31,400	$ 5,800	$ 31,600
Operating + Maintenance			11,400	2,000	6,400
Energy + Power			3,000	-	-
Total Annual Cost			$ 45,800	$ 7,800	$ 38,000
Cost[1] $/1,000 kg Product			4.87	0.83	4.04
($/1,000 lbs Product)			(2.21)	(0.38)	(1.84)

[1]Cost based on total annual cost
[2]Incremental cost over BPCTCA cost
[3]kg/kkg product is equivalent to lbs/1,000 lbs product
[4]See Table VE3

DRAFT

Table IIIE-4

Wastewater Treatment Costs for
BPCTCA, BADCT and BATEA Effluent Limitations
(ENR 1780 - August, 1972 Costs)

Explosive Industry - Subcategory A2

		Technology Level			
		RWL	BPCTCA	BADCT[2]	BATEA[2]
Average Production	35 x 10^3 kg/day (76.3 x 10^3 lbs/day)				
Production Days	260				
Wastewater Flow - kL/Day (gpd)	10,787 (2,850,000)				
kL/1,000 kg Product (gal/1,000 lbs)		217 (26,000)			
BOD Effluent Limitation - kg BOD/1,000 kg product[3]		63.4	4.56	4.20	1.28
mg/L[4]		700	49	45.	14.0
COD Effluent Limitation - kg COD/1,000 kg product[3]		118.	33	29	6.9
mg/L[4]		1250	350	305	74.
Total Capital Costs			$7,869,000	$768,000	$2,290,000
Annual Costs					
Capital Recovery plus return at 10% at 10 years			$1,280,000	$125,000	$ 373,000
Operating + Maintenance			401,000	41,400	137,000
Energy + Power			110,000	-	-
Total Annual Cost			$1,790,000	$167,000	511,000
Cost[1] $/1,000 kg Product			197	18.4	56.2
($/1,000 lbs Product)			(90.2)	(8.4)	(25.8)

[1]Cost based on total annual cost
[2]Incremental cost over BPCTCA cost
[3]kg/kkg product is equivalent to lbs/1,000 lbs product
[4]See Table VE-3

DRAFT

Table VIIIE-5

Wastewater Treatment Costs for
BPCTCA, BADCT and BATEA Effluent Limitations
(ENR 1780 - August, 1972 Costs)

Explosive Industry - Subcategory B

	Technology Level			
	RWL	BPCTCA	BADCT[2]	BATEA[2]
Average Production 19 x 10^3 kg/day (42.4 x 10^3 lbs/day)				
Production Days 260				
Wastewater Flow - kL/Day (gpd) 26 (6,810)				
kL/1,000 kg Product (gal/1,000 lbs)	1.3 (160)			
BOD Effluent Limitation - kg BOD/1,000 kg product[3]	.0039	.0003	.0003	.00008
mg/L	2.89	0.2	0.06	0.06
COD Effluent Limitation - kg COD/1,000 kg product[3]	.092	.027	.023	.006
mg/L	70.	20.	17.	4.2
Total Capital Costs		$ 429,000	$ 21,200	$ 98,100
Annual Costs				
Capital Recovery plus return at 10% at 10 years		$ 68,800	$ 3,500	$ 16,000
Operating + Maintenance		28,300	1,600	10,900
Energy + Power		300	-	-
Total Annual Cost		$ 97,400	$ 5,100	$ 26,900
Cost[1] $/1,000 kg Product		19.7	1.0	5.40
($/1,000 lbs Product)		(8.8)	(.5)	(2.40)

[1]Cost based on total annual cost
[2]Incremental cost over BPCTCA cost
[3]kg/kkg product is equivalent to lbs/1,000 lbs product

DRAFT

Table VIIIE-6

Wastewater Treatment Costs for
BPCTCA, BADCT and BATEA Effluent Limitations
(ENR 1780 - August, 1972 Costs)

Explosive Industry - Subcategory C

		Technology Level			
		RWL	BPCTCA	BADCT[2]	BATEA[2]
Average Production	0.052 x 10^3 kg/day (.115 x 10^3 lbs/day)				
Production Days	260				
Wastewater Flow - kL/Day (gpd)	9 (2,400)				
kL/1,000 kg Product (gal/1,000 lbs)		173	(20,900)		
BOD Effluent Limitation - kg BOD/1,000 kg product[3]		1260	90.6	83.4	25.4
mg/L		7,230	520.	478.	146.
COD Effluent Limitation - kg COD/1,000 kg product		6,550	1870.	1630.	395.
mg/L		37,600	10700.	9040.	2260.
Total Capital Costs			$ 386,000	$ 18,200	$135,000
Annual Costs					
Capital Recovery plus return at 10% at 10 years			$ 62,900	$ 3,000	$ 21,900
Operating + Maintenance			23,100	1,300	13,200
Energy + Power			100	-	-
Total Annual Cost			$ 86,100	$ 4,300	$ 35,100
Cost[1] $/1,000 kg Product			6400	318	2600
($/1,000 lbs Product)			(2880)	(140)	(1200)

[1]Cost based on total annual cost
[2]Incremental cost over BPCTCA cost
[3]kg/kkg product is equivalent to lbs/1,000 lbs product

DRAFT

F. Carbon Black Industry

This section provides quantitative cost information relative to assessing the economic impact of the proposed effluent limitations guidelines on the Carbon Black industry. Since no discharge of pollutants is proposed for subcategory A, to be achieved through housekeeping measures, no treatment models were developed for this subcategory. End-of-pipe treatment models were only considered for subcategory B. In order to evaluate the economic impact on a uniform treatment basis, end-of-pipe treatment models were proposed which will provide the desired level of treatment. These treatment models are summarized below:

Technology Level	End-of-Pipe Treatment Model
BPCTCA	Gravity Settling Pond
BADCT	Gravity Settling and Filtration
BATEA	Gravity Settling and Filtration

The choice of whether to use in-plant controls or end-of-pipe treatment to attain effluent limitations is left up to the individual manufacturer.

BPCTCA Cost Model

To evaluate the economic effects of the BPCTCA effluent limitations on the Carbon Black industry, it was necessary to formulate a BPCTCA treatment model. The model selected was gravity settling ponds, as shown in Figure VIII-1.

BATEA Cost Model

The BATEA treatment model used for economic evaluation of the proposed limitations includes dual media filtration in addition to BPCTCA treatment model. A typical diagram of the system is shown in Figure VIII-2.

BADCT Cost Model

The BADCT treatment model used for economic evaluation of the proposed limitations includes the BPCTCA treatment model, followed by dual media filtration, as shown in Figure VIII-3.

FIGURE VIIIF-1

CARBON BLACK INDUSTRY
BPCTCA COST MODEL

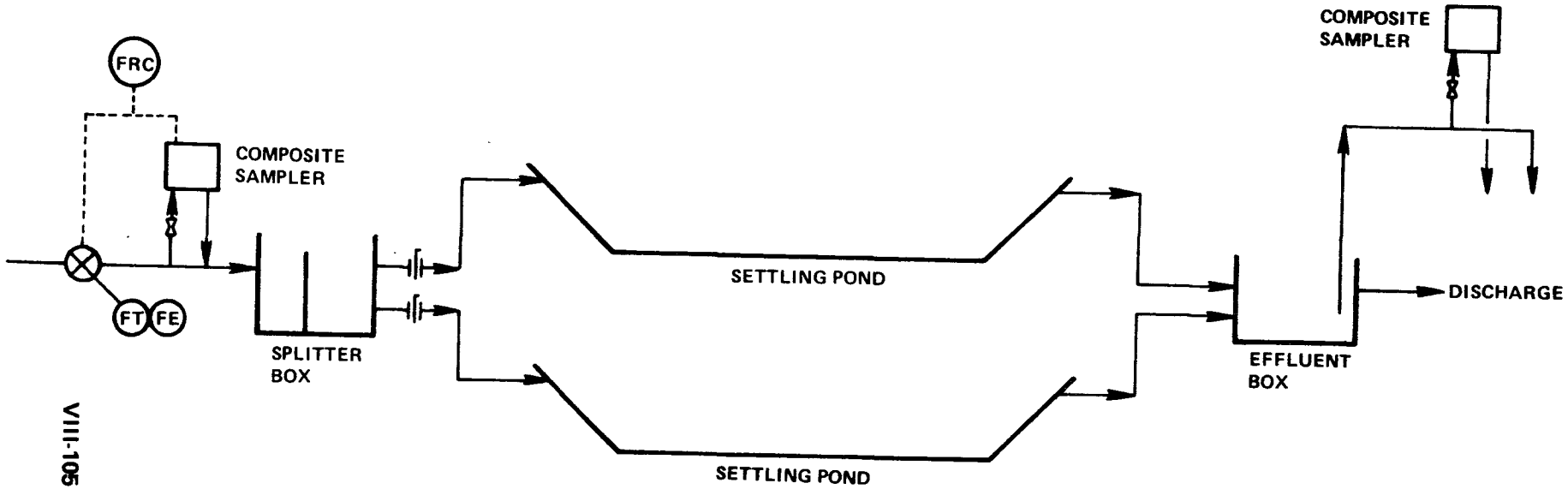

DRAFT

FIGURE VIIIF-2

BATEA WASTE TREATMENT MODEL

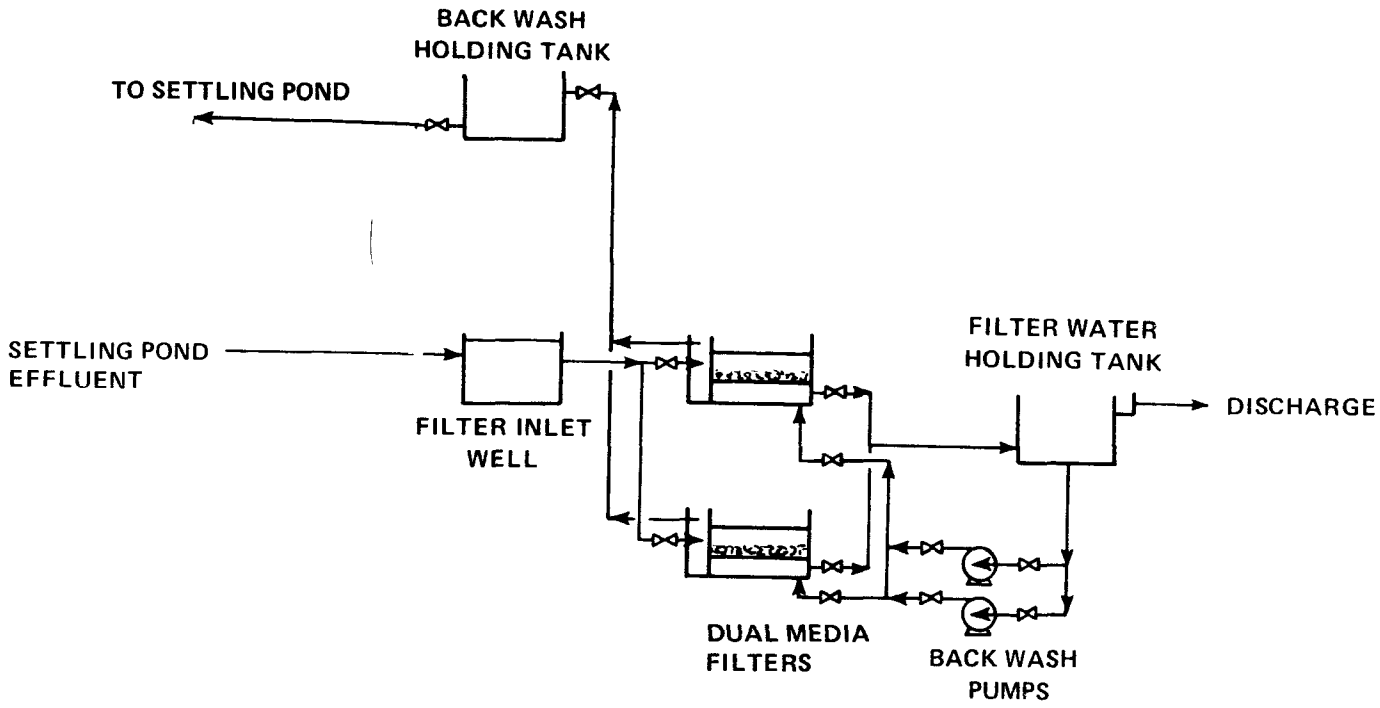

DRAFT

FIGURE VIIIF-3

CARBON BLACK INDUSTRY
BADCT COST MODEL

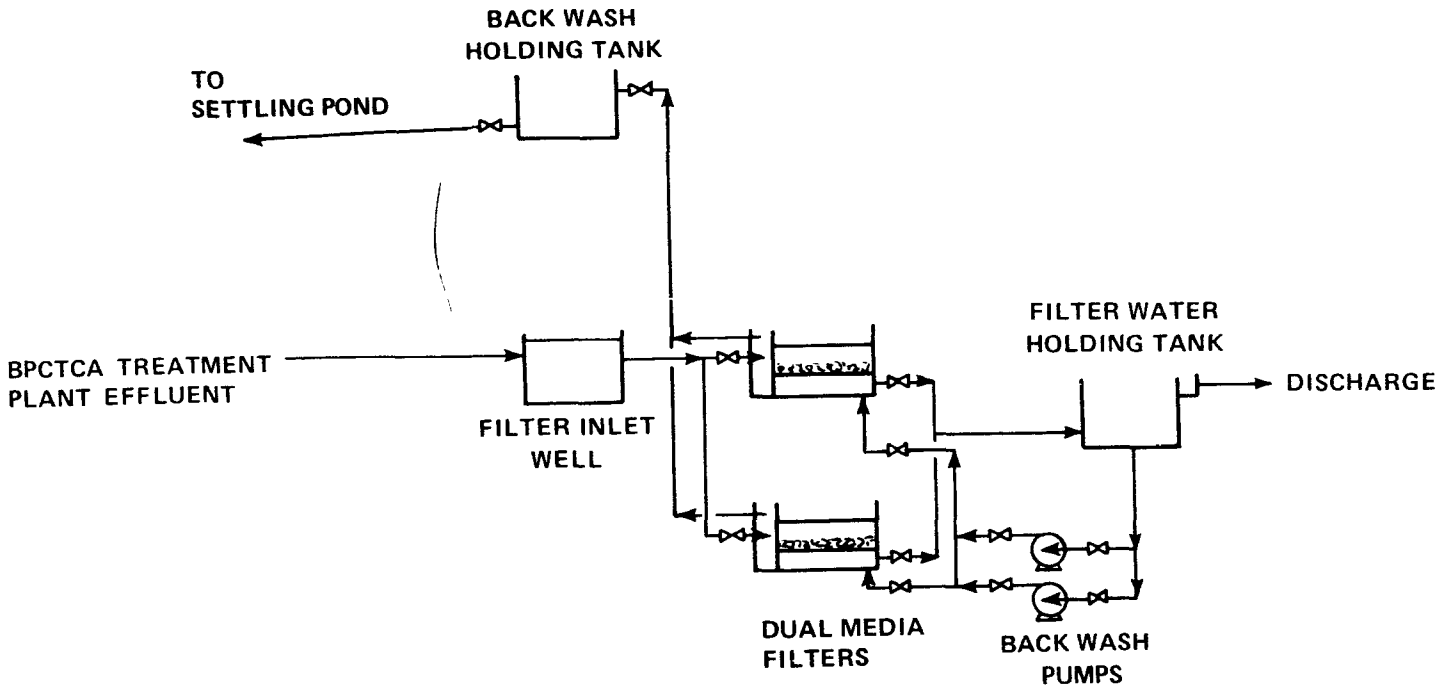

DRAFT

Cost

Annual and capital cost estimates have been prepared for the above end-of-pipe models for each technology level. These costs are presented in Table VIIIF-1. The costs presented in this table are incremental costs for achieving each technology level. The detailed cost breakdown by unit processes are included in the Supplement A. (supporting document).

A discussion of the possible effects that variations in treatment technology or design criteria could have on capital and annual costs is presented in the General section.

Energy

Since the BPCTCA treatment models were designed to use landfilling of gravity compacted sludge, the only possible consumers of energy could be low-horsepower pumps and the energy required to dredge the ponds. BATEA and BADCT models add gravity filtration. The energy impact of these would be very small; only small-horsepower pumps. Table VIIIF-1 presents the cost for energy and power, for the treatment models for BPCTCA, BATEA, and BADCT. The details for energy and power requirements are included in the Supplement A (supporting document).

Non-Water Quality Aspects

The non-water quality considerations for the Carbon Black industry in achieving the proposed effluent limitations are minimal. The major consideration will be disposal of the settled carbon black, which will be done primarily by landfilling.

Other non-water quality aspects will not be perceptibly affected. Equipment associated with in-process or end-of-pipe control systems would not add significantly to these.

Table VIIIF-1

Wastewater Treatment Costs for
BPCTCA, BADCT and BATEA Effluent Limitations
(ENR 1780 - August, 1972 Costs)

Carbon Black Industry - Subcategory B

		Technology Level			
		RWL	BPCTCA	BADCT[2]	BATEA[2]
Average Production	68 kkg/day x 10^3 lbs/day (150 x 10^3 lbs/day)				
Production Days	350				
Wastewater Flow -	kL/Day	49			
	(gpd)	(13,000)			
	kL/kkg product	0.7			
	(gal/1,000 lbs)	(86)			
TSS Effluent Limitation -	kg TSS/kkg product[3]	0.089	0.053	0.021	0.021
	mg/L		75	30	30
Total Capital Costs			$ 104,000	$ 38,500	$ 38,500
Annual Costs					
Capital Recovery plus return at 10% at 10 years			17,000	6,300	6,300
Operating + Maintenance			5,000	5,000	5,000
Energy + Power			--	--	--
Total Annual Cost			$ 22,000	$ 19,000	$ 19,000
Cost[1] $/1,000 kg Product ($/1,000 lbs Product)			($0.39)	($0.19)	($0.19)

[1]Cost based on total annual cost
[2]Incremental cost over BPCTCA cost
[3]kg/kkg product is equivalent to lb/1,000 lb product

DRAFT

G. Photographic Processing Industry

This section provides quantitative cost information relative to assessing the economic impact of the proposed effluent limitations on the Photographic Processing industry. A separate economic analysis of treatment cost impact on the industry will be prepared by another contractor and the results will be published in a separate document.

In order to evaluate the economic impact on a uniform treatment basis, end-of-pipe treatment models were proposed which will provide the desired level of treatment:

Technology Level	End-of-Pipe Treatment Model
BPCTCA	Extended aeration activated sludge.
BADCT	BPCTCA plus Filtration.
BATEA	BPCTCA plus Filtration.

The combination of in-plant controls and end-of-pipe treatment used to attain effluent limitations is left up to the individual manufacturer to decide on the basis of cost-effectiveness.

BPCTCA COST MODEL

Activated sludge treatment process has been selected as the BPCTCA treatment system. The 20,000 gpd activated sludge facility was chosen as the model for Level I treatment. Performance data on other end-of-pipe treatment systems presently on line were insufficient. Furthermore, a survey of the Photographic Industry indicated that there are no full plant scale end-of-pipe wastewater treatment systems.

The application of the activated sludge treatment scheme in the Photographic Processing industry was made because of the success encountered by the system in reducing BOD. Average BOD removals from this process were 70%. Higher BOD removals (perhaps as much as 85%) are possible, however, by increasing the size of the equalization tank used in the model plant (G-4). This slight design change will allow the treatment process to accomodate variable incoming flows without adversely affecting performance. Also, allowances were made in the proposed BPCTCA system to handle any excessive sludge produced by the upgraded treatment process. Figure VIIIG-1 illustrates the unit processes included in the treatment system. A summary of the general design basis for this system is presented in Table VIIIG-1.

FIGURE VIIIG-1

PHOTOGRAPHIC PROCESSING INDUSTRY
BPCTCA COST MODEL

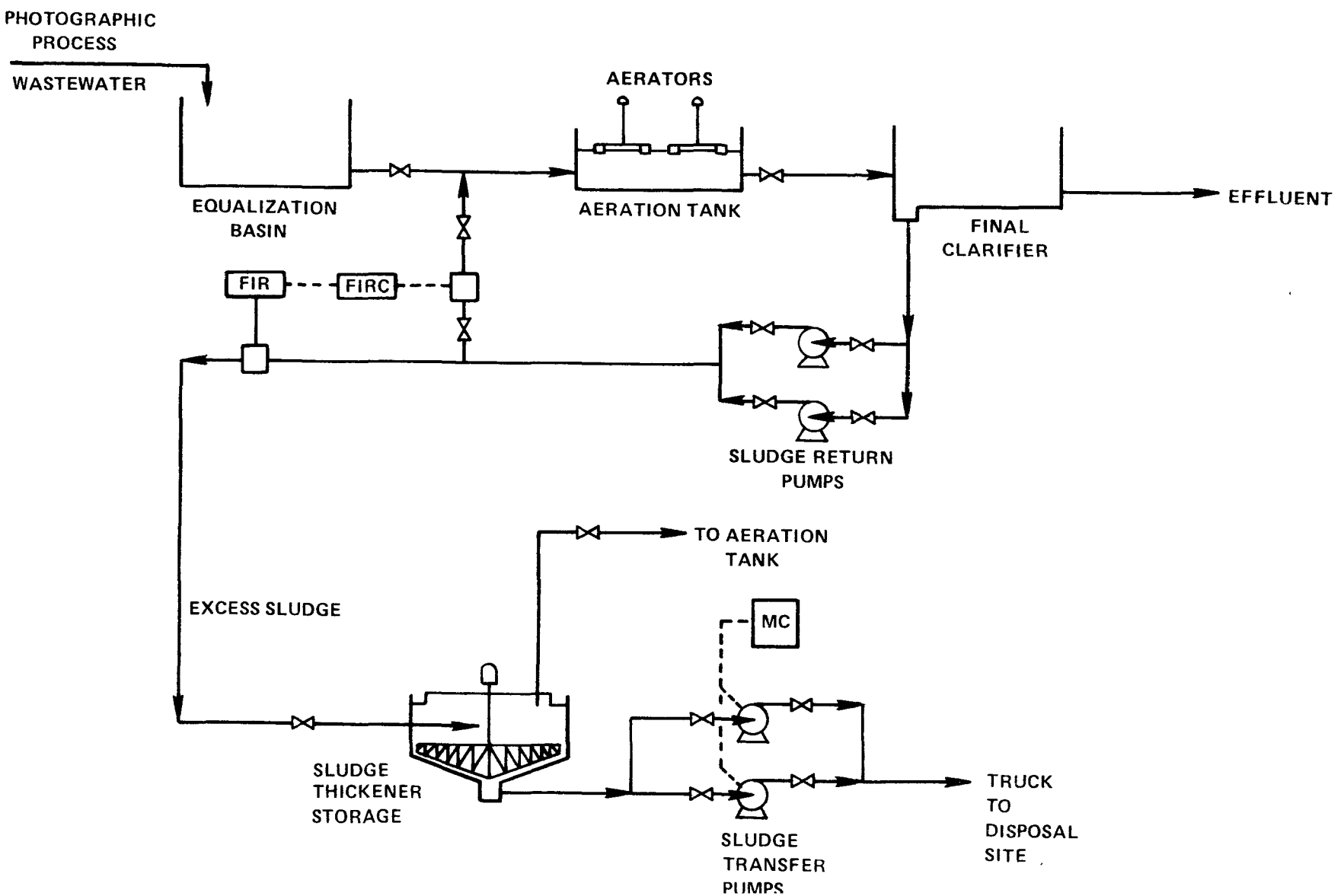

DRAFT

Table VIIIG-1

BPCTCA Treatment System Design Summary
Photographic Processing Industry

Treatment System Hydraulic Loading: 20,000 gpd (G-1)

Equalization

For plants with less than 24-hour/day and 7 day/week production (as is the case for most photoprocessors), a minimum holding time of 1.5 days is provided, with continuous discharge from the equalization basin over 24 hours. Given the design flow of 20,000 gpd, the basin size becomes 30,000 gallons.

Aeration Basin

Aeration Basins are sized on the basis of historic treatability data collected during the survey. The aeration tank has a volume of 20,000 gallons. Mechanical turbine blowers will be provided to supply the air. There are sufficient phosphates and nitrates in the wastewaters to satisfy the nutrient requirement of the system.

Secondary Flocculator Clarifiers

Secondary flocculator-clarifiers are designed for an overflow rate of 300 gpd/sq ft. The required surface area of the clarifier is then 70 square feet.

Sludge Thickener

The thickener was designed on the basis of a solids loading of 6 lbs/sq ft/day.

Final Sludge Disposal

Excess biological sludge is disposed of to a sanitary landfill by a contract hauler.

Specific in-plant modifications aimed to reduce both the silver and ferrocyanide concentrations in the wastewater flow should be incorporated into end-of-pipe treatment. These in-plant changes are considered part of good housekeeping practice, and modifications include electrolytic silver recovery from the fix or bleach-fix baths; regeneration of the ferricyanide bleach by ozone; using ferric EDTA bleach in some processes, after evaluating the respective effectiveness; using squeegees; and collecting the spent concentrated solutions in a holding tank for controlled bleed-off to a dilute wastewater stream.

Pollutants of special significance such as silver (in the form of silver thiosulfate) can be tolerated in the influent in concentrations as high as 10 mg/L (G-3). Ferrocyanide passes through the biological system unchanged and does not exhibit an inhibitory action on the treatment system. However, ferrocyanide may convert to free cyanide in the presence of sunlight, and therefore, an effluent limitation of 1.35 mg/L Fe $(CN)_6^{-4}$ (equivalent to 1 mg/L CN^-) should be imposed, based on cyanide toxicity studies (G-8).

Additional study into the fate of ferrocyanide may turn up evidence correlating excessive levels of free cyanide found in the receiving waters from the degeneration of the complex ferrocyanide ion. In that event, pretreatment of the ferrocyanide by precipition techniques should be imposed on the industry.

BATEA COST MODEL

The filtration of the effluent from the biological system, using dual-media filters, was selected as BATEA treatment system. Filtration of the effluent from the biological treatment process would provide incremental BOD reduction of 33 percent. Silver measured in the effluent from the model plant was 1 mg/L, which represents an 80 percent reduction from the influent to the biological system (G-3). Figure VIIIG-2. illustrates the unit processes involved in the treatment system. A summary of the general design basis for the system is presented in Table VIIIG-2.

Table VIIIG-2

BATEA Treatment System Design Summary
Photographic Processing Industry

Dual-Media Filter

The filters are sized on the basis of an average hydraulic loading of 3 gpm/sq ft. Backwash facilities are sized to provide rates up to 20 gpm/sq ft and for a total backwash cycle of up to 10 min. in duration. The filter media are 18" of anthracite (0.45m) 6" of sand (0.15m) and a drainage bed of 12" (0.3m) of graded gravel.

FIGURE VIIIG-2

DRAFT

PHOTOGRAPHIC PROCESSING INDUSTRY
BATEA COST MODEL

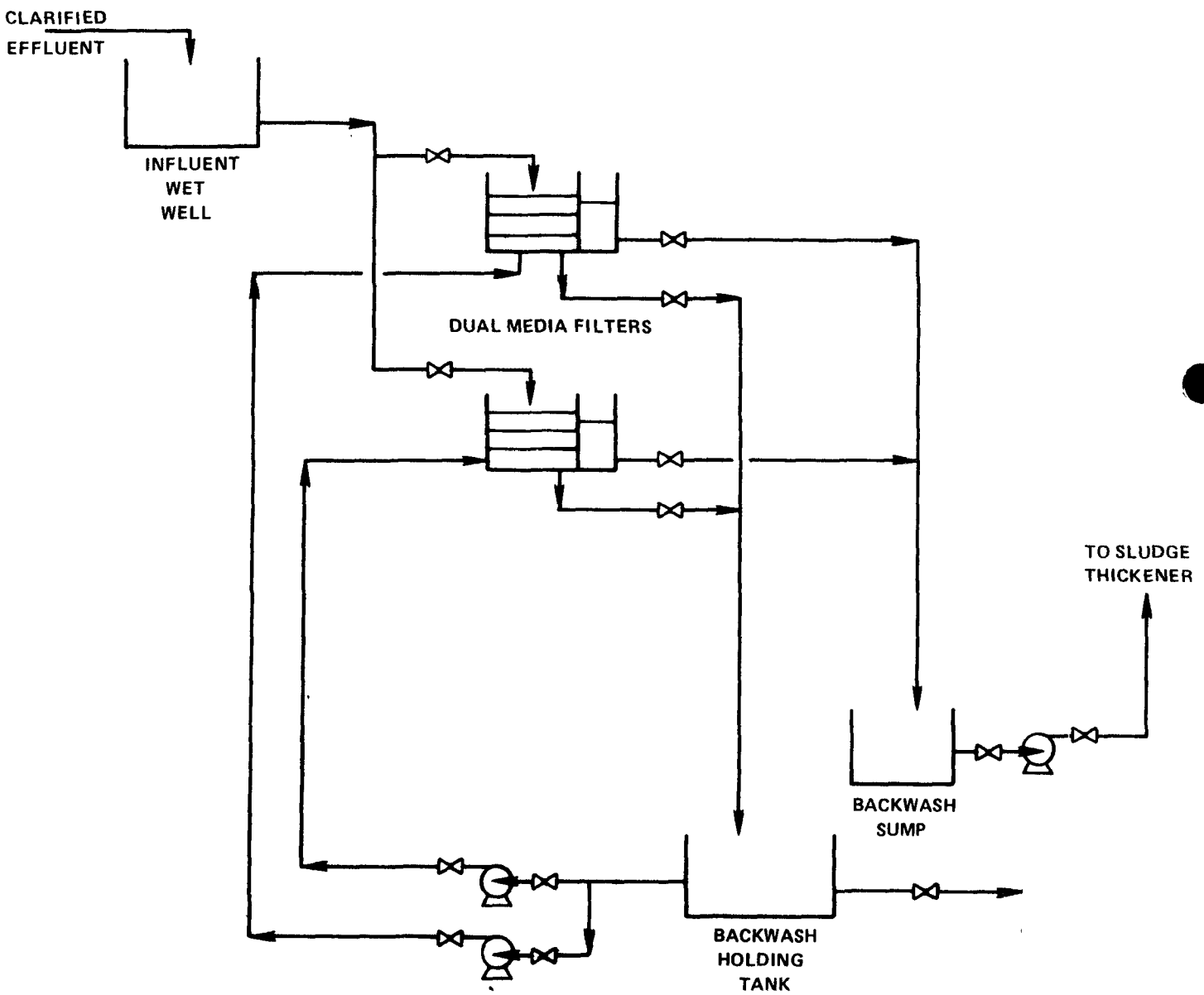

BADCT COST MODEL

For new plant sources, the in-plant modifications available for reducing the raw waste loads should be applied wherever possible. In addition, a minimum of end-of-pipe treatment as described in the BATEA Treatment System subsection should be applied; this consists of the BPCTCA system plus dual-media filtration.

COST

Capital and annual cost estimates were prepared for the treatment models described above. Average process water consumption (2,960 gal/1,000 sq ft) for the industry was based on the average of the three plants visited. Costs were developed for an average flow rate of 20,000 gpd, as explained earlier in Section VII under "Size of Facility." The costs presented for BATEA and BADCT in these tables are incremental costs over the cost for BPCTCA. For example, in Table VIIIG-1 the total capital cost for the average size photoprocessing plant to attain BPCTCA effluent limitation is $207,000. (This cost includes in-plant modifications.) The incremental capital costs for achieving the recommended BADCT in Table VIIIG-1 would be $43,900. This cost would be in addition to the capital investment made to achieve the BPCTCA effluent limitation. The detailed cost breakdown by unit processes are included in the Supplement A (supporting document).

Table VIIIG-1 also illustrates RWL, and effluent limitations based on the production for a model plant. Percent removals for BOD and COD are based on past operating experience of the large-scale activated sludge treatment process. Applying the 85 percent reduction factor to the BOD RWL, BPCTCA effluent limitations are determined. Applying the 90 percent reduction factor to BOD RWL, BADCT effluent limitations result. The respective COD reduction for BPCTCA and BADCT treatment systems factors are 50 percent and 60 percent. There are no incremental pollutant reductions for BATEA treatment.

These cost estimates were prepared based on the recommended design basis. Variations in the design basis or selection of alternative treatment process can have appreciable effects on the reported capital costs, as discussed in the General section

Table VIIIG-1

Wastewater Treatment Costs for
BPCTCA, BADCT and BATEA Effluent Limitations
(ENR 1780 - August, 1972 Costs)

Photographic Processing Industry

	Technology Level			
	RWL	BPCTCA	BADCT[2]	BATEA[2]
Average Production (628 sqm/day)				
Production Days				
Wastewater Flow - kL/day	75.7			
(gpd)	(20,000)			
kL/1,000 sqm	120			
(gal/1,000 sq ft)	(2960)			
BOD Effluent Limitation - kg BOD/1,000 m^2 product	36 (7.36)	5.4 (1.11)	3.6 (0.74)	3.6 (0.74)
mg/L	298	45	3.6 (0.74)	45 30
COD Effluent Limitation - kg COD/1,000 m^2 product	129 (26.4)	64.5 (13.2)	3.6 (0.74)	51.6 (10.6)
mg/L	1070	535	3.6 (0.74)	429
Total Capital Costs		$ 207,000	3.6 (0.74)	$ 43,900
Annual Costs				
Capital Recovery plus return at 10% at 10 years		$ 33,700	3.6 (0.74)	$ 7,200
Operating + Maintenance		27,400	3.6 (0.74)	2,600
Energy + Power		700	3.6 (0.74)	200
Total Annual Cost		$ 61,800	3.6 (0.74)	$ 10,000
Cost[1] /1,000 m^2 Product		$ 230		$ 37.60

[1]Cost based on total annual cost
[2]Incremental cost over BPCTCA cost

DRAFT

ENERGY

The sizes ranges of the BPCTCA and BATEA treatment models preclude the application of high energy-using units such as sludge incinerators. Therefore, the overall impact on energy should be minimal. Estimated energy consumption per year for BPCTCA and BATEA treatment models are 32,570 kwh and 9,700 kwh, respectively. Table VIIIG-1 presents the cost for energy and power for the treatment models for BPCTCA, BATEA and BADCT. The details for energy and power requirements are included in the supplement A (supporting document).

NON-WATER QUALITY ASPECTS

The major non-water quality aspects of the proposed effluent limitations encompass are sludge disposal, noise and air pollution.

The BPCTCA treatment model proposes landfilling of biological sludge. If practiced correctly, this disposal method will not create health hazards or nuisance conditions. However, there is a widespread diversity of opinion over the effects of silver leaching into ground water supplies. Carefully controlled sludge application should minimize these problems.

Noise levels will not be appreciably affected with the implementation of the proposed treatment models. Air pollution should only be a consideration if sludge incineration is selected as the waste disposal alternative.

H. Hospitals

This section provides quantitative cost information relative to assessing the economic impact of the proposed effluent limitations guidelines on hospitals. A separate economic analysis of treatment cost impact on the industry will be prepared by another contractor and the results will be published in a separate document.

In order to evaluate the economic impact on a uniform treatment basis, an end-of-pipe treatment model which will provide the desired levels of treatment was proposed.

Technology Level	End-of-Pipe Treatment Model
BPCTCA	Activated Sludge
BATEA	Activated Sludge and Filtration
BADCT	Activated Sludge and Filtration

BPCTCA Cost Model

A flow diagram for the BPCTCA wastewater treatment facility for hospitals is shown in Figure VIIIH-1. A summary of the general design basis is presented in Table VIIIH-1, and the treatment system effluent requirements are as follows:

Influent (RWL)		Effluent	
Flow gal/1,000 occupied beds[1] (gpd)	BOD_5 lbs/1,000 occupied beds[1]	BOD_5 lbs/1,000 occupied beds[1]	mg/L
319,000	587	41.1	18
172,000			

[1]Occupied beds on average annual basis.

The following is a brief discussion of the rationale for selection of the unit processes included in the model wastewater treatment system.

FIGURE VIIIH-1

HOSPITALS
BPCTCA COST MODEL

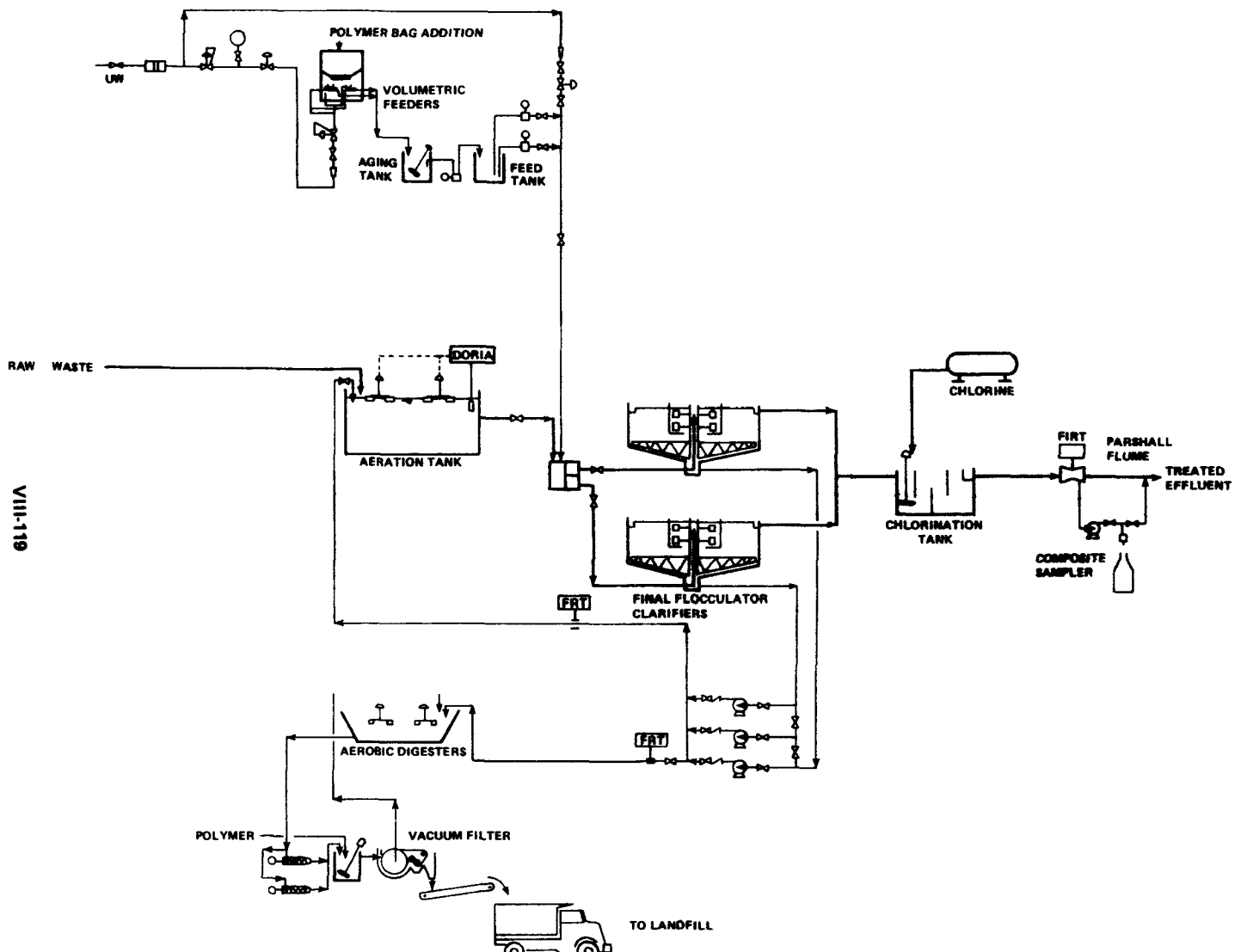

DRAFT

Table VIIIH-1

BPCTCA Treatment Systems Design Summary
Hospitals

Hydraulic Loading

The model plant was designed for a flow of 191,000 gpd.

Aeration Basin

The size of the aeration basin is based on data collected during the survey. Mechanical surface aerators are provided on the following basis:

Minimum Number of Aerators	2
Oxygen Utilization: Energy	0.8 lbs O_2/lb BOD removed
Oxygen Utilization: Endogenous	6 lbs/hr/1,000 lbs MLVSS
α	0.75
β	0.90
Oxygen Transfer (Standard)	3.5 lbs O_2/hr/shaft HP at 20°C and zero D.O. in tap water
Motor Efficiency	85 percent
Minimum Basin D.O.	2 mg/L

Secondary Flocculator/Clarifiers

Secondary flocculator clarifiers are rectangular units with a length to-width ratio of 1 to 4 and a side water depth of 8 feet. The overflow rate is approximately 450 gpd/sq ft. Polymer addition facilities are provided.

Chlorination Facilities

Chlorine contact basins have been designed to provide 30 minutes detention time, based on average flow.

Sludge Thickener

The thickener provided was designed on the basis of a solids loading of 6 lbs/sq ft/day.

Aerobic Digester

The aerobic digester was designed on the basis of a hydraulic detention time of 20 days. The size of the aeration-mixers was based on an oxygen requirement of 1.6 lbs O_2/lb VSS destroyed and a mixing requirement of 165 HP/mg of digester volume.

Vacuum Filtration

The size of the vacuum filters was based on a cake yield of 2 lbs/sq ft/hr and a maximum running time of 8 hours per day. The polymer system was designed to deliver up to 20 lbs of polymer per ton of dry solids.

BATEA Cost Model

The BATEA model treatment system used for economic evaluation of the proposed limitations includes the BPCTCA treatment model followed by dual-media filtration. A typical flow diagram for the selected model treatment facilities is shown in Figure VIIIH-2. A summary of the general design basis is presented in Table VIIIH-2.

Based on effluent filtration data presented in Process Design Manual for Upgrading Existing Wastewater Treatment Plants, U.S. EPA, 1974, BATEA effluent limitations of 10 mg/L (22.6 lbs/1,000 occupied beds) for both BOD and TSS are recommended. Selection of these values actual field data, since no effluent filtration facilities were observed during the survey.

BADCT Cost Model

The BADCT model treatment system is identical to the proposed BATEA treatment system.

An activated sludge process was selected because of its demonstrated ability to efficiently treat hospital wastes. Because of the relatively low suspended solids concentrations, primary clarifiers are not included in the model facilities. The activated sludge system produces biological solids which must be removed from the system and returned to the aeration basin or wasted in order to maintain the proper load to microorganism ratio. To serve this purpose, secondary flocculator-clarifiers have been provided. Sludge handling facilities consisting of thickening, aerobic digestion and vacuum filtration have been provided to facilitate ultimate disposal of sludge to a sanitary landfill.

Cost

Capital and annual costs estimates were prepared for an end-of-pipe treatment model. The prepared cost estimates are presented in Table VIIIH-3. The costs presented in this table are incremental costs for achieving each technology level. The total capital cost for biological treatment to attain BPCTCA effluent limitations is $830,000 for a hospital with 600 beds. The BPCTCA effluent limitations were determined using the reduction factors presented in Section IX. The incremental capital cost for achieving the recommended BATEA and BADCT effluent limitations for a hospital with 600 beds, over the cost for BPCTCA, is $169,000. The detailed cost breakdown by unit processes are included in the Supplement A (supporting document).

FIGURE VIIIH-2

BADCT AND BATEA COST MODEL
HOSPITALS

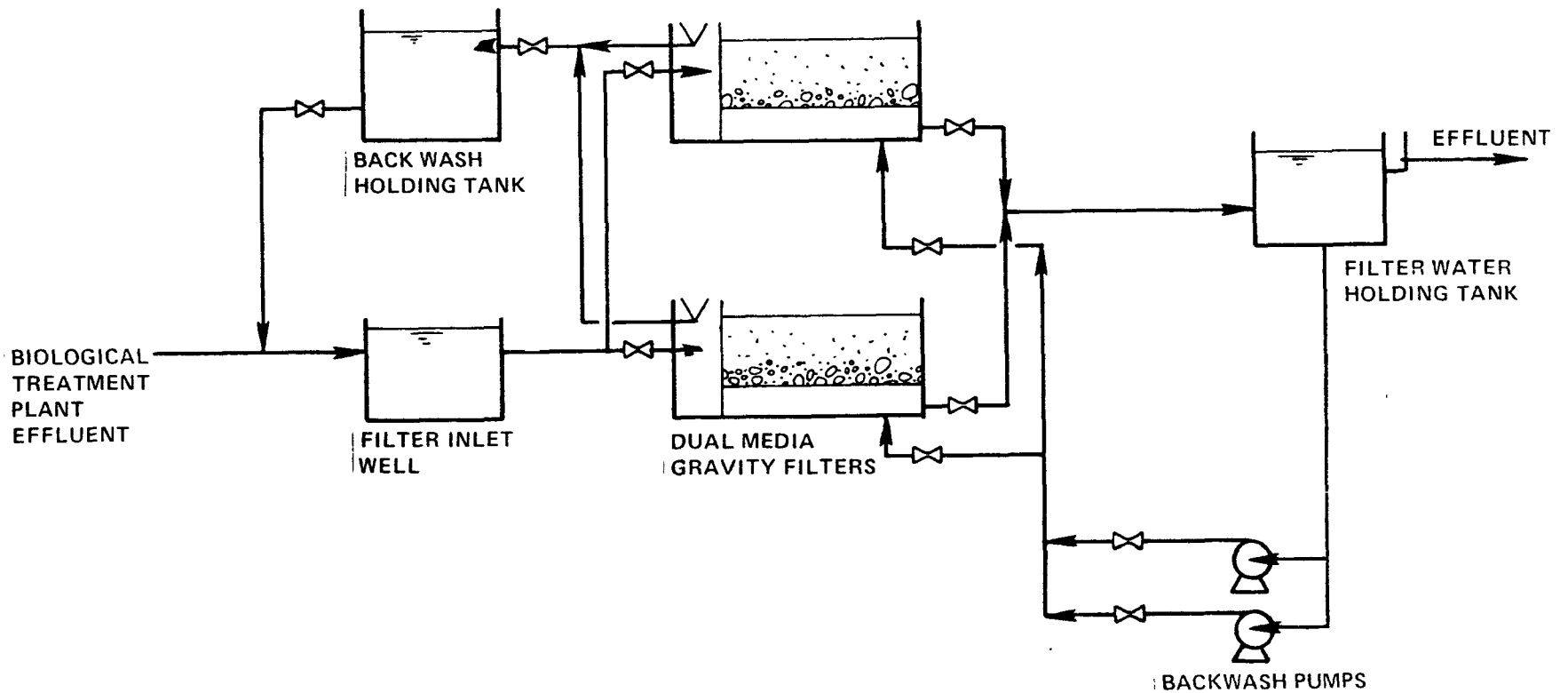

DRAFT

Table VIIIH-2

BADCT Treatment System Design Summary
Hospitals

Dual-Media Filtration

The size of the filters is based on average hydraulic loading of 3 gpm/sq ft. Backwash facilities are designed to provide rates up to 20 gpm/sq ft and for a total backwash cycle of up to 10 minutes in duration. The filter media are 24" of coal (1mm effective size) 12" of sand (0.4-0.5 mm effective size).

Backwash Holding Tank

Tankage is provided to hold the backwash water and decant it back to the treatment plant over a 24-hour period. This will eliminate hydraulic surging of the treatment units.

Wastewater Treatment Costs for
BPCTCA, BADCT and BATEA Effluent Limitations
(ENR 1780 - August, 1972 Costs)

Hospitals

	Technology Level			
	RWL	**BPCTCA**	**BADCT[2]**	**BATEA[2]**
Average Number of Occupied Beds - 636				
Wastewater Flow - kL/Day	768	768	768	768
(gpd)	(203,000)	(203,000)	(203,000)	(203,000)
kL/1,000 beds	1,210	1,200	1,200	1,200
(gal/1,000	(319,000)	(319,000)	(319,000)	(319,000)
BOD Effluent Limitation - kg/1,000 beds	266			
(lbs BOD/1,000 beds)	(587)			
mg/L	221	18.6	12.1	12.1
COD Effluent Limitation - kg/1,000 beds	731	(41.)	(266)	(26.6)
(lbs COD/1,000 beds)	(1610)	15	10.	10
	605	23 (51) 19	8 (17) 6	8 (17) 6
Total Capital Costs		$830,000	$169,000	$169,000
Annual Costs				
Capital Recovery plus return at 10% at 10 years		$135,000	$ 27,000	$ 27,000
Operating + Maintenance		105,000	10,000	10,000
Energy + Power		10,000	3,000	3,000
Total Annual Cost		$250,000	$ 40,000	40,000
Cost[1]/1,000 occupied beds/year		$393,000	$ 63,000	$ 63,000

[1]Cost based on total annual cost
[2]Incremental cost over BPCTCA cost

DRAFT

The previous cost estimates were prepared based on the recommended design basis. Variations in the design basis or selection of alternative treatment processes can have appreciable effects on the reported capital costs, as discussed in the General section.

Energy

Due to the characteristics of wastewater generated from hospitals and the high degree of pollutant removal obtainable by use of activated sludge treatment systems, application of high energy-consuming processes was not considered. Therefore, the overall impact on energy for hospitals should be minimal. Table VIIIH-1 presents the cost for energy and power for the treatment model for BPCTCA, BATEA and BADCT. The details for energy and power requirements are included in the Supplement A (supporting document).

Non-Water Quality Aspects

The major non-water quality aspects of the proposed effluent limitations guidelines are ultimate sludge disposal, noise and air pollution.

The ultimate sludge disposal by landfilling for the digested biological sludge has been proposed. Is practiced correctly, landfilling of the digested biological sludge does not create health hazards or nuisance condition. Sludge incineration is a viable alternative, but is not included in the treatment model due to high cost and high fuel requirement.

The sludge quantities generated by the treatment model plants are estimated to be 33,000 lbs/year on dry solids weight basis.

Noise levels increase by the implementation of the proposed treatment model needs a consideration in Hospital.

However in the installations observed, noise levels due to the treatment plants were not a problem.

As incineration is not proposed in the treatment model, air pollution is not of concern.

SECTION IX

BEST PRACTICABLE CONTROL TECHNOLOGY CURRENTLY AVAILABLE (BPCTCA)

General

The effluent limitations that must be achieved by all plants by 1 July 1977 through the application of the best practicable control technology currently available (BPCTCA) are based upon an average of the best performance achievements of existing exemplary plants. In those industrial categories where an exemplary treatment plant does not exist, the effluent limitations have been based upon levels of technology which are currently practiced in other industries with similar wastewater characteristics and which can be practicably implemented by 1 July 1977.

The development of best practicable control technology currently available has been based on both in-plant and end-of-pipe technology for each industrial subcategory. The effluent limitations commensurate with the best practicable control technology currently available have been established for each industrial subcategory on the basis of information in Sections III through VIII of this report, and are presented in the following sections. It has been shown that these limitations can be attained through the application of BPCTCA pollution control technology.

The approach taken by each industry in developing BPCTCA effluent limitations is described in the following text.

NOTICE: THESE ARE TENTATIVE RECOMMENDATIONS BASED UPON INFORMATION IN THIS REPORT AND ARE SUBJECT TO CHANGE BASED UPON COMMENTS RECEIVED AND FURTHER INTERNAL REVIEW BY EPA.

A. Pharmaceutical Industry

Based on the information contained in Sections III through VIII of this report, effluent limitations guidelines commensurate with the Best Practicable Control Technology Currently Available, which explicitly set numerical values for the allowable pollutant discharges within each subcategory are presented in Table IXA-1. The effluent limitations guidelines specify allowable discharge of BOD_5 and COD, based on removals attainable through the application of BPCTCA pollution control technology described in Section VII of this report. It should be emphasized that the removal efficiencies selected for determining BPCTCA effluent limitations guidelines represent average historical values of exemplary waste treatment facilities within the Pharmaceutical industry. For subcategories A, B, C_1, D, and E, model BPCTCA waste treatment technology includes equalization, neutralization, a biological treatment system with sludge digestion, vacuum filtration and ultimate disposal via landfill. For subcategory C_2 the model waste treatment system is thermal oxidation.

As previously discussed in Section VII, promulgation of effluent TSS limitations based on historical TSS removal efficiencies is not feasible. Since flocculator-clarifiers with polymer addition have been used in other industries to reduce effluent TSS, it is reasonably assumed that they can also be applied in the Pharmaceutical industry. On the basis of this information, a TSS effluent limitations guideline of 50 mg/L has been recommended for subcategories A and C_1, and 20 mg/L for subcategories B, C_2, D, and E. It is recommended that if more severe restrictions for total suspended solids are desired, these should be established on the basis of water quality objectives. The objective of these effluent limitations is to provide inducement for in-plant reduction of both flow and contaminant loadings, prior to end-of-pipe treatment. However, it is not the intent of these effluent limitations guidelines to specify either the unit wastewater flow which must be achieved, or the wastewater treatment practices which must be employed, at the individual pharmaceutical plants.

As indicated in Section VII, the following treatment efficiencies, based on historical treatment plant data (except for subcategory C_2) were selected as being applicable for the determination of BPCTCA effluent limitations guidelines. The treatment efficiencies for subcategory C_2 are based on the performance of a thermal oxidation system.

	Treatment Efficiency (percent)	
Subcategory	BOD_5	COD
A, B, C_1, D, E	93	89
C_2	99	99

NOTICE: THESE ARE TENTATIVE RECOMMENDATIONS BASED UPON INFORMATION IN THIS REPORT AND ARE SUBJECT TO CHANGE BASED UPON COMMENTS RECEIVED AND FURTHER INTERNAL REVIEW BY EPA.

Table IXA-1

BPCTCA Effluent Limitations Guidelines

Pharmaceutical Industry

Subcategories	Flow L/kkg Product (gal/1,000 lbs)	Raw Waste Load (RWL) Parameter	RWL kg/kkg[1]	RWL mg/L	BPCTCA (1977) Long-Term Average Daily Effluent Parameter	BPCTCA kg/kkg[1]	BPCTCA mg/L	Effluent Limitations: Average of Daily Values for 30 Consecutive Days Shall Not Exceed Parameter	Avg. kg/kkg[1]	Avg. mg/L	Effluent Limitations: Maximum for Any One Day Parameter	Max. kg/kkg[1]	Max. mg/L
Subcategory A Fermentation	See Figure VA-4	BOD_5	See Figure VA-1		BOD_5	See Figure IIA-1		BOD_5	Avg Daily x 2 3		BOD_5	Avg.Daily x 4 1	
		COD	See Figure VA-2		COD	See Figure IIA-1		COD	Avg Daily x 2 1		COD	Avg.Daily x 2 9	
		TSS	--	--	TSS	--	50	TSS	--	130	TSS	--	250
Subcategory B Biological and Natural Extraction Products	558,000 (67,000)	BOD_5	144	256	BOD_5	10.1	18	BOD_5	23.2	--	BOD_5	44.4	--
		COD	269	481	COD	29.6	53	COD	62.2	--	COD	85.8	--
		TSS	--	--	TSS	--	20	TSS	--	52	TSS	-	100
Subcategory C_1 Chemical Synthesis	160,000 (19,200)	BOD_5	302	1,890	BOD_5	21.1	132	BOD_5	48 5	--	BOD_5	86 5	--
		COD	572	3,580	COD	62 9	394	COD	132	--	COD	182	--
		TSS	--	--	TSS	--	50	TSS	--	130	TSS	--	250
Subcategory C_2 Chemical Synthesis Synthetic Antibiotic Production	100,000 (12,000)	BOD_5	5,200	52,500	BOD_5	52	525	BOD_5	120	--	BOD_5	213	--
		COD	6,600	66,600	COD	66	667	COD	139	--	COD	191	--
		TSS	--	--	TSS	--	20	TSS	--	52	TSS	--	100
Subcategory D Formulation	14,600 (1,750)	BOD_5	8.1	555	BOD_5	0.57	39	BOD_5	1.31	--	BOD_5	2.34	--
		COD	14.7	1,010	COD	1.62	111	COD	3.40	--	COD	4 70	--
		TSS	--	--	TSS	--	20	TSS	--	52	TSS	--	100
Subcategory E[2] Research	11,600 lit/1,000 sq m (285 gal/1,000 sq ft)	BOD_5	1.76[3] (0 36)[4]	151	BOD_5	0 12[3] (0.025)[4]	11	BOD_5	0.28[3] (0.058)[4]	--	BOD_5	0.49[3] (0.103)[4]	--
		COD	3.63[3] (0.74)[4]	31	COD	0.40[3] (0.081)[4]	34	COD	0.84[3] (0.17)[4]	--	COD	1.16[3] (0.235)[4]	--
		TSS	--	--	TSS	--	20	TSS	--	52	TSS	--	100

[1] kg/kkg production is equivalent to lbs/1,000 lbs production
[2] Effluent limitations for subcategory E are based on gross floor area
[3] kg/1,000 sq m
[4] lb/1,000 sq ft

NOTICE: THESE ARE TENTATIVE RECOMMENDATIONS BASED UPON INFORMATION IN THIS REPORT AND ARE SUBJECT TO CHANGE BASED UPON COMMENTS RECEIVED AND FURTHER INTERNAL REVIEW BY EPA.

DRAFT

The BPCTCA effluent limitations guidelines shown in Table IXA-1 were developed by applying these treatment efficiencies to the RWL's shown in Table VA-1.

It should be understood that the effluent limitations guidelines are to be applied to individual subcategories. The information required to do this is:

1. The identity of the manufacturing process, so that it can be subcategorized.

2. The production rate so that the specific limitation can be calculated.

The actual effluent limitations guidelines would be applied directly only to a plant whose manufacturing processes fall within a single subcategory. In the case of multi-subcategory plants the effluent limitations guidelines to be placed upon a plant would be the sum of the individual effluent limitations guidelines applied to each of its subcategory operations. This building-block approach allows the system to be applied to any facility regardless of its unique set of processes.

Since separate limitations are specified for BOD_5, COD, and TSS, there may be cases where compliance with one of the limitations would require treating to levels below the active limitations for the other parameter. In such cases, compliance with BOD_5 and TSS limitations will be factors used to determine if a plant is in compliance with effluent limitations guidelines.

NOTICE: THESE ARE TENTATIVE RECOMMENDATIONS BASED UPON INFORMATION IN THIS REPORT AND ARE SUBJECT TO CHANGE BASED UPON COMMENTS RECEIVED AND FURTHER INTERNAL REVIEW BY EPA.

B. Gum and Wood Chemicals Industry

Strategy for Development of BPCTCA Effluent Limitations Guidelines

The effluent limitations guidelines for BPCTCA for the Gum and Wood Chemicals Industry were developed by steps, starting from the process raw waste loads (RWL).

As previously discussed in Section IV, subcategory A (production of char and charcoal briquets via carbonization of hardwood and softwood) is a net water consumer and discharges no process wastewaters. Raw materials, intermediate char and charcoal briquets are handled in a dry form. The char is brittle and disintegrates with excessive handling, thus generating excessive fines and creating fugitive dust problems in the production area. This problem can be mitigated by utilizing buggies for material transport. Any off-specification materials in the production can be reworked or disposed of in dry form. Therefore, no discharge of process wastewater pollutants is consistent with BPCTCA for this subcategory

For the other five subcategories, the process RWL is a production-based ratio relating specific pollutants to production quantities. During the field sampling program, process RWL's were developed for the five subcategories by sampling contact process wastewaters wherever possible. Where it was not feasible to sample a segregated, process wastewater stream (e.g., subcategory D), the total process discharge was sampled but the RWL-flow was determined by subtracting the uncontaminated cooling water and steam condensate contribution from the total process discharge.

There were also instances where the data obtained for RWL-flow was not considered representative of the process. For example, in subcategory F, Plant No. 57 has the operating practice of venting an aqueous waste stream to the atmosphere in a vapor phase. It was determined that normal industry practice is to condense such steam vapor; therefore, this stream was included in the RWL-flow for that plant, since the stream contacted small quantities of entrained material and noncondensible hydrocarbons.

Single RWL values were established in each category for all pertinent pollutants, historic data on raw waste loads was only available at Plant No. 55, subcategory B, and Plant No. 55, subcategory F. All other data was derived from the field sampling survey conducted by the contractor. These data are indicative of the variations in raw waste load which may exist for a single process at a particular plant or between different manufacturers operating the same process. For example, this variation in RWL's was observed between Plants No. 55 and No. 52 in subcategory B and is discussed in Section V.

NOTICE: THESE ARE TENTATIVE RECOMMENDATIONS BASED UPON INFORMATION IN THIS REPORT AND ARE SUBJECT TO CHANGE BASED UPON COMMENTS RECEIVED AND FURTHER INTERNAL REVIEW BY EPA.

The single set of values assigned to each process was designated as the RWL which can be obtained through the application of in-process pollution control practices which are commensurate with BPCTCA. Briefly, the process modifications considered consistent with BPCTCA include the following:

1. The recycle of still condensate for raw material washing water as illustrated in Plant No. 55, subcategory B.

2. The on-site treatment and recycle of raw material wash water as demonstrated in subcategory C.

3. The direct recycle of immiscible solvents as an absorbent of noncondensible hydrocarbons as demonstrated in Plant No. 55, subcategory F.

4. The recycle of water used in barometric condensers as demonstrated in subcategory D.

End-of-pipe treatment technologies commensurate with BPCTCA are based on the utilization of biological treatment, including activated sludge or aerated lagoon with clarification of the lagoon effluent. These end-of-pipe systems may include additional treatment operations such as equalization, neutralization, dissolved air flotation for the separation of insoluble hydrocarbons, or nutrient addition.

Although biological systems are considered as most generally applicable to the wide variety of waste generated by this industry, it should be noted that only two such systems were observed during the study. The performance data for these two systems are presented in Table VIIB-2. The effluent from Plant No. 55, while producing a high quality effluent, was considered atypical because the plant was operating at low levels of production for approximately two weeks prior to the plant survey. Plant No. 55 employed a trickling filter which was inoperative during the survey period due to flooding of the filter media. Therefore, the data could not be used to develop adequate treatment models.

The design criteria for the proposed biological treatment models were developed from bench scale biological treatability studies on wastewaters from a wood naval stores production operation and two tall oil by-product production facilities, as discussed in Section VIIB of this document. It should be noted that metal catalyst may in some cases be used in the production of rosin based derivatives, and that the process wastewaters may contain sufficient levels of metal to be toxic or inhibitory to a biological system. However, if specific manufacturing processes employing such catalyst discharge

NOTICE: THESE ARE TENTATIVE RECOMMENDATIONS BASED UPON INFORMATION IN THIS REPORT AND ARE SUBJECT TO CHANGE BASED UPON COMMENTS RECEIVED AND FURTHER INTERNAL REVIEW BY EPA.

wastewaters are combined with wastewaters from processes not employing metal catalysts, the resulting toxicity of the total wastewater may be reduced to non-inhibitory levels for biological treatment. If this is not the case, BPCTCA does not preclude the use of in-process pretreatment for discharge to biological facilities, or physical chemical processes to remove the toxic metals from the process wastewaters.

Effluent Reduction Obtainable Through Application of BPCTCA

Based on the information contained in Sections IV and VII of this document, a determination has been made of degree of effluent reduction obtainable via BPCTCA, which is presented in Table IXB-1. Although the effluent limitations guidelines for BPCTCA may be obtained by whatever combination of in-process and end-of-pipe means is best suited to the individual manufacturer, the numerical values for the guidelines were calculated through application of waste reduction factors based on the use of end-of-pipe biological treatment systems. The waste reduction factors used for calculating the BPCTCA effluent limitation guidelines for BOD and COD parameters are:

BOD_5 - 95 percent
COD - 73 percent

These factors are based on the performance of biological treatment systems described in Section VII - Control and Treatment Technologies.

It should be noted that BOD_5 should be used as the controlling parameter for BPCTCA effluent limitations guidelines. The value specified for COD would be used in those cases where the process waste (even after dilution with other waste from plant operations) cannot be effectively reduced in a biological system. In such cases, it is anticipated that some combination of in-process control coupled with end-of-process system (e.g., physical-chemical processes) can achieve the recommended effluent COD limitation. It should also be noted that compliance with both BOD_5 and COD effluent limitations guidelines is not required.

NOTICE: THESE ARE TENTATIVE RECOMMENDATIONS BASED UPON INFORMATION IN THIS REPORT AND ARE SUBJECT TO CHANGE BASED UPON COMMENTS RECEIVED AND FURTHER INTERNAL REVIEW BY EPA.

Table IXB-1
BPCTCA Effluent Limitations Guidelines
Gum and Wood Chemicals Industry

Subcategories	Flow L/kkg Product (gal/1,000 lbs.)	Raw Waste Load (RWL) Parameter	RWL kg/kkg[1]	RWL mg/L	BPCTCA (1977) Long-Term Average Daily Effluent Parameter	BPCTCA kg/kkg[1]	BPCTCA mg/L	Effluent Limitations: Average of Daily Values for 30 Consecutive Days Shall Not Exceed Parameter	30-day kg/kkg[1]	30-day mg/L	Effluent Limitations: Maximum for Any One Day Parameter	Maximum kg/kkg[1]	Maximum mg/L
Subcategory A													
Char and Charcoal Briquets		No Discharge of Process Wastewater Pollutants											
Subcategory B													
Gum Rosin and Turpentine	528 (63.4)	BOD_5	4.44	8,410	BOD_5	0.22	420	BOD_5	0.37	701	BOD_5	0.70	1,330
		COD^5	8.40	15,900	COD^5	2.27	4,300	COD^5	3.63	6,880	COD^5	7.04	13,300
		TSS	--	--	TSS	--	50	TSS	--	85	TSS	--	140
Subcategory C													
Wood Rosin, Turpentine, and Pine Oil	9,470 (1,140)	BOD_5	6.49	685	BOD_5	0.32	34	BOD_5	0.54	57	BOD_5	1.02	108
		COD^5	12.6	1,330	COD^5	3.40	360	COD^5	5.44	574	COD^5	10.54	1,110
		TSS	--	--	TSS	--	50	TSS	--	85	TSS	--	140
Subcategory D													
Tall Oil Rosin, Pitch, and Fatty Acids	4,860 (583)	BOD_5	3.11	639	BOD_5	0.16	32	BOD_5	0.27	56	BOD_5	0.51	105
		COD^5	7.08	1,460	COD^5	1.91	394	COD^5	3.06	630	COD^5	5.92	1,220
		TSS	--	--	TSS	--	50	TSS	--	50	TSS	--	140
Subcategory E													
Essential Oil	62,100 (7,450)	BOD_5	70.8	1,140	BOD_5	3.54	57	BOD_5	6.02	97	BOD_5	11.33	183
		COD^5	86.9	1,400	COD^5	23.5	378	COD^5	37.8	606	COD^5	72.8	1,170
		TSS	--	--	TSS	--	50	TSS	--	50	TSS	--	140
Subcategory F													
Rosin Derivatives	309 (37)	BOD_5	4.40	14,200	BOD	0.22	711	BOD_5	0.37	1,200	BOD_5	0.70	2,270
		COD^5	8.58	27,800	COD^5	2.32	7,510	COD^5	3.71	12,000	COD^5	7.14	23,300
		TSS	--	--	TSS	--	50	TSS	--	50	TSS	--	140

[1] kg/kkg product is equivalent to lbs./1,000 lbs. production

NOTICE: THESE ARE TENTATIVE RECOMMENDATIONS BASED UPON INFORMATION IN THIS REPORT AND ARE SUBJECT TO CHANGE BASED UPON COMMENTS RECEIVED AND FURTHER INTERNAL REVIEW BY EPA.

DRAFT

C. Pesticides and Agricultural Chemicals Industry

Based on the information contained in Sections III through VIII of this report, effluent limitations guidelines commensurate with the best practicable control technology currently available, which explicitly set numerical values for the allowable pollutant discharges within each subcategory, are presented in Table IIC-1. The effluent limitations specify allowable discharge of BOD_5 based on removals attainable through the application of BPCTCA Pollution Control Technology, described in Section VII of this report. BPCTCA waste treatment technology includes various types of pretreatment, depending on the particular subcategory, a biological oxidation system and sludge handling facilities. In addition, the recommended technology includes incineration of highly concentrated toxic wastes.

With few exceptions, untreated raw wastes generated by the Pesticides and Agricultural Chemicals industry as a whole exhibit some degree of toxicity to biological treatment and biological analytical procedures. This phenomenon is illustrated by the high COD to BOD_5 ratios indicated in Tables VC-6 to VC-10. Accordingly, it would not be reasonable to drive limitations for biological treatment effluents using removal efficiencies as a basis.

By contrast, effluent waste load data (refer to Bable VIIC-2) do not exhibit the same degree of biological toxicity as raw waste load data. This can be attributed to the fact that effluents discharged from biological treatment systems, where residence times are commonly high, have lower concentrations of toxic components. In other words, effluent BOD_5 data is more reliable and usable than raw waste load data.

Since all of the recommended BPCTCA treatment models for the Pesticides and Agricultural Chemicals industry feature biological treatment, BOD_5 limitations are the only direct measure of the treatment effectiveness and the only reasonable parameter for developing effluent standards and limitations.

Based on the above arguments, it was decided to derive limitations on effluent qualities and treatment performances being attained and proven in the industry, and, in addition, these limitations should be in terms of BOD_5.

The BPCTCA limitations for the industry were developed in a stepwise manner. First, based on industry data and observations, it was ascertained that well-designed and operated treatment facilities could achieve 30 mg/L BOD_5 and 40 mg/L TSS. These levels agree favorably with the effluent data reported in Table VIIC-2.

NOTICE: THESE ARE TENTATIVE RECOMMENDATIONS BASED UPON INFORMATION IN THIS REPORT AND ARE SUBJECT TO CHANGE BASED UPON COMMENTS RECEIVED AND FURTHER INTERNAL REVIEW BY EPA.

Flow data of the industry were compiled for each subcategory, as shown in Table IXC-1. From this data reasonable flow allocations based on production rates were established for each subcategory.

Subcategory A: Halogenated Organics

Since Plant 70 does not utilize good water management practices, it therefore cannot be considered as exemplary; the wastewater flow from this plant is higher than the industry's in general. In addition, the flow data for Plant 70 presented in Table IXC-1 includes non-process effluents, such as cooling water. Accordingly, 1,750 gal/1,000 lb flow from Plant 64 was used as the flow allocation value for the halogenated organics subcategory.

Subcategory B: Organo-Phosphorus

The flow allocation for this subcategory was derived from the average of the data presented in Table IXC-1, and is equivalent to 3,000 gal/1000 lb.

Subcategory C: Organo-Nitrogen

The flow allocation for the organo-nitrogen subcategory was developed from the data presented in Table IXC-1 by utilizing the average flow value of 3,700 gal/1,000 lb of product.

Subcategory D: Metallo Organic

The flow allocation for this subcategory is based on the data for Plant 71 (Table IXC-1) and was set at 8,000 gal/1,000 lb.

Subcategory E-1: Water-based Formulators/Packagers

The flow data presented in Table IXC-1 for this subcategory is not considered representative of the industry as a whole, since Plant 66's is extremely good from a water and effluent management point of view; on the other hand, Plant 69's is very poor. Therefore, the data presented in Table VC-10 was used to develop a more reasonable and realistic flow allocation. Since Plant 69 is quite definitely non-exemplary, its flow data was not used. Using the data from the other three plants, a flow allocation of 160 gal/1,000 lb was established.

Subcategory E-2: Solvent-based and "Dry" Formulator/Packagers

Since this subcategory is considered capable of attaining no discharge of process wastewater pollutants, a flow allocation is not appropriate or necessary.

NOTICE: THESE ARE TENTATIVE RECOMMENDATIONS BASED UPON INFORMATION IN THIS REPORT AND ARE SUBJECT TO CHANGE BASED UPON COMMENTS RECEIVED AND FURTHER INTERNAL REVIEW BY EPA.

Table IXC-1
BPCTCA Effluent Limitations Guidelines

Pesticides and Agricultural Chemicals Industry

Subcategories	Flow L/kkg Product (gal/1,000 lbs.)	Raw Waste Load Parameter	Raw Waste Load kg/kkg[1]	Raw Waste Load mg/L	BPCTCA (1977) Long-Term Average Daily Effluent Parameter	BPCTCA (1977) Long-Term Average Daily Effluent kg/kkg[1]	BPCTCA (1977) Long-Term Average Daily Effluent mg/L	Effluent Limitations: Average of Daily Values for 30 Consecutive Days Shall Not Exceed Parameter	Average of Daily Values kg/kkg[1]	Average of Daily Values mg/L	Maximum for Any One Day Parameter	Maximum for Any One Day kg/kkg[1]	Maximum for Any One Day mg/L
Subcategory A													
Halogenated-Organic Pesticides	14,600 (1,750)	BOD_5	218	--	BOD_5	0.44	30	BOD_5	1.01	--	BOD_5	1.80	--
		Phenol	0.01	--	Phenol	0.00073	0.05	Phenol	0.0015	--	Phenol	0.0020	--
		TSS	--	--	TSS	--	40	TSS	--	84	TSS	--	156
Subcategory B													
Organo-Phorphorus Pesticides	25,000 (3,000)	BOD_5	21	--	BOD_5	0.73	30	BOD_5	1.68	--	BOD_5	2.99	--
		Total P	24	--	Total P	0.08	3	Total P	0.17	--	Total P	0.23	--
		TKN	1.3	--	TKN	0.24	10	TKN	0.50	--	TKN	0.70	--
		Phenol	4.1	--	Phenol	0.00073	0.03	Phenol	0.0015	--	Phenol	0.002	--
		Cyanide[2]	--	--	Cyanide[2]	0.00037	0.01	Cyanide[2]	0.00078	--	Cyanide[2]	0.001	--
		TSS	--	--	TSS	--	40	TSS	--	84	TSS	--	156
Subcategory C													
Organo-Nitrogen Pesticides	30,800 (3,700)	BOD_5	220	--	BOD_5	0.92	30	BOD_5	2.12	--	BOD_5	3.77	--
		TKN	--	--	TKN	0.62	20	TKN	1.30	--	TKN	1.80	--
		Cyanide[2]	--	--	Cyanide[2]	0.00036	0.01	Cyanide[2]	0.00076	--	Cyanide[2]	0.0010	--
		TSS	--	--	TSS	--	40	TSS	--	84	TSS	--	156
Subcategory D													
Metallo-Organic Pesticides	66,700 (8,000)	BOD_5	34	--	BOD_5	2.0	30	BOD_5	4.6	--	BOD_5	8.2	--
		TKN	231	--	TKN	1.34	20	TKN	2.81	--	TKN	3.89	--
		Metals[3]	148	--	Metals[3]	0.0014	0.02	Metals[3]	0.0029	--	Metals[3]	0.004	--
		TSS	--	--	TSS	--	40	TSS	--	84	TSS	--	156
Subcategory E_1													
Formulators & Packagers Water-Based Products	1,330 (160)	BOD_5	22	--	BOD_5	0.40	30	BOD_5	0.92	--	BOD_5	1.64	--
		TKN	--	--	TKN	0.014	10	TKN	0.029	--	TKN	0.04	--
		TSS	--	--	TSS	--	40	TSS	--	84	TSS	--	156
Subcategory E_2													
Formulators & Packagers Solvent-Based Dry Products	No Discharge of Process Wastewater Pollutants												

[1] kg/kkg production is equivalent to lbs/1,000 product

[2] Only applicable when cyanide compounds can enter the effluent

[3] Limitations are applicable individually for each metal that can enter the effluent

NOTICE THESE ARE TENTATIVE RECOMMENDATIONS BASED UPON INFORMATION IN THIS REPORT AND ARE SUBJECT TO CHANGE BASED UPON COMMENTS RECEIVED AND FURTHER INTERNAL REVIEW BY EPA.

DRAFT

Using these flow values and the BOD_5 (30 mg/L) and SS (40 mg/L) concentrations, effluent limitations guidelines, in terms of pound of pollutants per 1,000 pounds of product, were calculated. These effluent limitation guidelines loadings agree well with the observed loading attained by the existing wastewater treatment plants in the industry (refer to Table VIIC-2).

The objective of these effluent limitations guidelines is to provide inducement for in-plant reduction of both flow and contaminant loadings, prior to end-of-pipe treatment. However, it is not the intention of these effluent limitations guidelines to specify the unit wastewater flow which must be achieved, or the wastewater treatment practices which must be employed, at the individual plants.

It should be understood that the effluent limitations guidelines are to be applied to individual subcategories. To do this the following information is required:

1. Identify of the manufacturing process (for subcategorization).
2. Production rate (for calculation of specific limitation).

The actual effluent limitations would be applied directly only to a plant whose manufacturing processes fall within a single subcategory. In the case of multi-subcategory plants, the effluent limitations guidelines to be placed upon a plant would be the sum of the individual effluent limitations guidelines applied to each of its subcategory operations. This building-block approach allows the system to be applied to any facility, regardless of its unique set of processes.

Since separate limitations are specified for various pollutants, there may be cases where compliance with one of the limitations would require treating to levels below the active limitations for the other parameter. In such cases, compliance with BOD_5 and TSS limitations will be factors used to determine if a plant is in compliance with effluent limitations guidelines.

NOTICE: THESE ARE TENTATIVE RECOMMENDATIONS BASED UPON INFORMATION IN THIS REPORT AND ARE SUBJECT TO CHANGE BASED UPON COMMENTS RECEIVED AND FURTHER INTERNAL REVIEW BY EPA.

D. Adhesives and Sealants Industry

Based on the information contained in Sections III through VIII of this report, effluent limitations guidelines commensurate with the best practicable control technology currently available have been established for each subcategory of the Adhesives and Sealants industry. These limitations may be attained through the application of BPCTCA pollution control technology. BPCTCA in-process technology includes the segregation of non-contact wastewaters from contaminated process wastewater. The batch process wastewaters include mainly cleaning and washing water.

As discussed in Section VII, BPCTCA end-of-pipe technology for subcategory A is equivalent to the application of equalization, primary clarification, a biological treatment, sludge digestion, vacuum filtration, and off-site landfill for sludge cakes. BPCTCA end-of-pipe technology for subcategories B and C is equivalent to the application of evaporation systems. In subcategories D, E and F, there is no discharge of process wastewater pollutants.

The recommended BPCTCA treatment systems are not the only ones which may be applicable to a given subcategory. Specific treatability studies may be required to determine effluent limitations guidelines for some processes whose RWL's were not specifically defined by sampling during this study.

It should be understood that the effluent limitations guidelines are to be applied to individual processes as they are defined within the five industrial subcategories. The actual effluent limitations guidelines would only be applied directly to a plant whose manufacturing processes fall within a single subcategory; many adhesive plants, however, are involved in multi-product manufacturing. In this case, the effluent limitations guidelines placed upon a plant would be the sum of the individual effluent limitations guidelines applied to each of its subcategories. This additive approach allows the system to be applied to any facility regardless of its unique set of processes.

For the case of the biological treatment system, in absence of any existing exemplary treatment facilities in the industry, the treatment efficiencies considered to be attainable are based on pilot studies with similar wastewaters. For the case of the liquid evaporation system, since there are no data available for the

NOTICE: THESE ARE TENTATIVE RECOMMENDATIONS BASED UPON INFORMATION IN THIS REPORT AND ARE SUBJECT TO CHANGE BASED UPON COMMENTS RECEIVED AND FURTHER INTERNAL REVIEW BY EPA.

treatment efficiencies, it is assumed that at least the same removal efficiencies attainable by biological treatment for subcategory A could be achieved by the liquid evaporation treatment system. In reality, higher removal efficiencies will be attainable with the application of liquid evaporation systems.

The treatment efficiencies selected as being applicable to subcategories A, B, and C for the determination of BPCTCA effluent limitations guidelines are as follows:

Parameter	Treatment Efficiency percent
BOD_5	93
COD	93

These treatment efficiencies were applied to the RWL for each subcategory to attain BPCTCA effluent limitations guidelines as shown in Table IXD-1.

It should also be noted that, since separate limitations are specified for BOD, COD, and TSS, there may be cases where compliance with one of the limitations will require treating to levels below the actual limitations for the other. In such cases, it will be necessary to ascertain the particular character of the waste and to determine whether compliance with all these limitations is reasonable. This discussion should be based on actual treatability studies of the specific wastes or combination of wastes in question.

NOTICE: THESE ARE TENTATIVE RECOMMENDATIONS BASED UPON INFORMATION IN THIS REPORT AND ARE SUBJECT TO CHANGE BASED UPON COMMENTS RECEIVED AND FURTHER INTERNAL REVIEW BY EPA.

Table IXD-1

BPCTCA Effluent Limitations Guidelines

Adhesive & Sealants Industry

Subcategories	Flow L/kkg Product (gal/1,000 lbs)	Raw Waste Load (RWL) Parameter	RWL kg/kkg[1]	RWL mg/L	BPCTCA (1977) Long-Term Average Daily Effluent Parameter	BPCTCA kg/kkg[1]	BPCTCA mg/L	Effluent Limitations: Average of Daily Values for 30 Consecutive Days Shall Not Exceed Parameter	Avg. kg/kkg[1]	Avg. mg/L	Maximum for Any One Day Parameter	Max. kg/kkg[1]	Max. mg/L
Subcategory A Water-Based Animal Glues and Gelatins	250,000 (30,000)	BOD_5	942	3,770	BOD_5	65.9	265	BOD_5	138	--	BOD_5	257	--
		COD^5	2,520	10,100	COD^5	176	710	COD^5	370	--	COD^5	686	--
		TSS	--	--	TSS	--	50	TSS	--	130	TSS	--	250
Subcategory B Water-Based Adhesive Solutions Containing Synthetic and Natural Materials	940 (113)	BOD_5	3 4	3,610	BOD_5	0.24	255	BOD_5	0.50	--	BOD_5	0.94	--
		COD^5	15.5	16,500	COD^5	1.09	1,300	COD^5	2.29	--	COD^5	4.25	--
		TSS	--	--	TSS	--	20	TSS	--	52	TSS	--	100
Subcategory C Solvent Solution Adhesives and Cements Generating Contaminant Wastewaters	340 (41)	BOD_5	4.4	12,900	BOD_5	0 31	910	BOD_5	0.65	--	BOD_5	1.21	--
		COD^5	7.3	21,500	COD^5	0.51	1,530	COD^5	1.07	--	COD^5	1.99	--
		TSS	--	--	TSS	--	20	TSS	--	52	TSS	--	100
Subcategory D Solvent Solution Adhesives and Cements Generating Non-Contact Cooling Water Only		No Discharge of Process Wastewater Pollutants											
Subcategory E Solid and Semi-Solid Hot Melt Thermoplastic Adhesives		No Discharge of Process Wastewater Pollutants											
Subcategory F Dry-Blended Adhesive Materials		No Discharge of Process Wastewater Pollutants											

[1] kg/kkg production is equivalent to lbs/1,000 lbs production

NOTICE THESE ARE TENTATIVE RECOMMENDATIONS BASED UPON INFORMATION IN THIS REPORT AND ARE SUBJECT TO CHANGE BASED UPON COMMENTS RECEIVED AND FURTHER INTERNAL REVIEW BY EPA.

DRAFT

E. Explosives Industry

The effluent limitations guidelines for BPCTCA for the Explosives industry were developed from the information contained in Sections IV to VIII of this document. The limitations are expressed in terms of allowable pounds of pollutant per 1,000 pounds of products produced. The guidelines are based on pollutant reductions being achieved in the industry at the present time.

For all subcategories, the treatment system is the same: equalization, neutralization, primary sedimentation, aeration basin, final clarification, and sludge handling facilities. Subcategory B and C, however, may choose to limit their effluent by other means. Subcategory B, with a low flow of 6,800 gallons per day and moderate strength concentration, could eliminate all wastewater flow in many cases. Averaging only 2,520 gallons per day, subcategory C with its concentrated waste may find liquid incineration the most cost-effective solution. Subcategory C could, by employing dry clean-up and more careful operations, reduce its waste load to a level where it would be feasible to drum all wastes and ship them to a regional treatment center.

It is recognized that the waste flow from subcategory B is very dilute. Hence, a biological process would not work well on this waste. However, since load and pack operations are almost always combined with the manufacturing of explosives or propellants in a plant, it was concluded that the same level of treatment be required for subcategory B wastes. Hence, no separate treatment system has been devised.

As indicated in Section VII, the following treatment levels, based on historical data, were selected for the determination of BPCTCA effluent limitations guidelines for all subcategories.

Parameter	Average Percent Removal of RWL	Concentrations Limitation
BOD_5	93	-
COD	72	-
TSS	--	50 mg/L

TSS has a concentration limitation because, as previously discussed, removal rates using activated sludge that produces an effluent TSS concentration of less than 50 mg/L are unrealistic.

Note that although NO_3-N can be in certain instances a significant problem in this industry, no effluent limitation has been prescribed.

NOTICE: THESE ARE TENTATIVE RECOMMENDATIONS BASED UPON INFORMATION IN THIS REPORT AND ARE SUBJECT TO CHANGE BASED UPON COMMENTS RECEIVED AND FURTHER INTERNAL REVIEW BY EPA.

The only reason to put an effluent limitation on NO_3-N is if there is a public water supply a short distance downstream. Since there is no way of assuring that a munitions plant is significantly close to a water supply intake, it is recommended that this be governed in local conditions.

Application of these removal rates to the RWL produces the BPCTCA effluent limitations guidelines shown in Table IXE-1.

It should be understood that the effluent limitations guidelines are to be applied to individual subcategories. The information required to do this are:

1. The identity of the manufacturing process, so that it can be subcategorized.

2. The production rate, so that the specific limitation can be calculated.

The actual effluent limitations guidelines would be applied directly only to a plant whose manufacturing processes fall within a single subcategory. In the case of multi-subcategory plants, the effluent limitations guidelines to be placed upon a plant would represent a production-weighted sum of the individual effluent limitations guidelines applied to each of its subcategory operations. This building-block approach allows the guidelines to be applied to any facility regardless of its products because of the different water bodies discharged to.

It is anticipated that local conditions will control discharges of nitrates and sulfates. Because of this, nitrates and sulfates are not addressed in BPCTCA.

NOTICE: THESE ARE TENTATIVE RECOMMENDATIONS BASED UPON INFORMATION IN THIS REPORT AND ARE SUBJECT TO CHANGE BASED UPON COMMENTS RECEIVED AND FURTHER INTERNAL REVIEW BY EPA.

Table IXE-1

BPCTCA Effluent Limitations Guidelines

Explosives Industry

Subcategories	Flow L/kkg Product (gal/1,000 lb)	Raw Waste Load (RWL) Parameter	RWL kg/kkg[1]	RWL mg/L	BPCTCA (1977) Long-Term Average Daily Effluent Parameter	Long-Term Average kg/kkg[1]	Long-Term Average mg/L	Effluent Limitations: Average of Daily Values for 30 Consecutive Days Shall Not Exceed Parameter	30-day Average kg/kkg[1]	30-day Average mg/L	Maximum for Any One Day Parameter	Maximum kg/kkg[1]	Maximum mg/L
Subcategory A1 Manufacture of Explosives	1,680 (201)	BOD_5	1.46	871	BOD_5	0.10	60	BOD_5	0.21	-	BOD_5	0.39	-
		COD	3.87	2,310	COD	1.08	647	COD	2.27	-	COD	4.21	-
		TSS	-	690	TSS	-	50	TSS	-	52	TSS	-	100
Subcategory A2 Manufacture of Propellants	217,000 (26,000)	BOD_5	63.4	700	BOD_5	4.44	20	BOD_5	9.32	-	BOD_5	17.3	-
		COD	118	1,250	COD	33	152	COD	78	-	COD	126	-
		TSS	-	270	TSS	-	50	TSS	-	52	TSS	-	100
Subcategory B Load and Pack Operations	1,330 (160)	BOD_5	0.0039	3	BOD_5	0.0003	0.2	BOD_5	0.006	-	BOD_5	0.001	-
		COD	0.092	70	COD	0.026	20	COD	0.055	-	COD	0.10	-
		TSS	-	690	TSS	-	50	TSS	-	52	TSS	-	100
Subcategory C Manufacture of Initiators	174,000 (20,900)	BOD_5	1,260	7,230	BOD_5	88.2	507	BOD_5	185	-	BOD_5	344	-
		COD	6,550	37,600	COD	1,830	10,500	COD	3,840	-	COD	7,140	-
		TSS	-	56	TSS	-	50	TSS	-	130	TSS	-	250

[1] kg/kkg production is equivalent to lbs/1,000 lbs product

NOTICE: THESE ARE TENTATIVE RECOMMENDATIONS BASED UPON INFORMATION IN THIS REPORT AND ARE SUBJECT TO CHANGE BASED UPON COMMENTS RECEIVED AND FURTHER INTERNAL REVIEW BY EPA.

DRAFT

F. Carbon Black Industry

Based on the information contained in Sections III through VIII of this report, effluent limitations guidelines commensurate with the best practicable control technology currently available, which explicitly set numerical values for the allowable pollutant discharges within each subcategory, are presented in Table IXF-1. The effluent limitations guidelines specify allowable discharges of TSS based on removals attainable through the application of BPCTCA Pollution Control Technology described in Section VII of this report. The removal efficiencies selected for determining BPCTCA effluent limitations guidelines represent average historical values of existing waste treatment facilities within the Carbon Black industry. For subcategory B, model BPCTCA waste treatment technology includes either pond settling or more conventional clarifiers.

Based on a dehumidifier/quench water flow rate of 8,640 gallons per thousand pounds of carbon black produced (72,100 L/kkg) in a closed loop system, a blowdown of 100 gallons per thousand pounds of carbon black produced (835 L/kkg) was considered reasonable. This is the waste stream to which BPCTCA was applied. On the basis of these data, an average TSS effluent limitation guideline of 0.053 kg/kkg is recommended. Since variability data were unavailable, no daily maximum values are presented. These should be developed through experience in the industry.

Survey findings indicate that the furnace process is a net user of water, i.e., no process contact wastewater is discharged from the process. Based on this fact, no discharge of process wastewater pollutants is recommended for subcategory A.

The objective of these effluent limitations guidelines is to provide inducement for in-plant reduction of both flow and contaminant loadings, prior to end-of-pipe treatment. However, it is not the intent of these effluent limitations guidelines to specify either the unit wastewater flow which must be achieved, or the wastewater treatment practices which must be employed, at the individual carbon black plants.

It should be understood that the effluent limitations guidelines are to be applied to individual subcategories. The information required to do this is:

1. The identity of the manufacturing process, so that it can be subcategorized.

2. The production rate so that the specific limitation can be calculated.

NOTICE: THESE ARE TENTATIVE RECOMMENDATIONS BASED UPON INFORMATION IN THIS REPORT AND ARE SUBJECT TO CHANGE BASED UPON COMMENTS RECEIVED AND FURTHER INTERNAL REVIEW BY EPA.

Table IXF-1

BPCTCA Effluent Limitations Guidelines

Carbon Black Industry

Subcategories	Flow L/kkg Product (gal/1,000 lbs)	Raw Waste Load (RWL) Parameter	kg/kkg[1]	mg/L	BPCTCA Long-Term Average Daily Effluent Parameter	kg/kkg[1]	mg/L
Subcategory A Furnace Black		--- No Discharge of Process Wastewater Pollutants ---					
Subcategory B Thermal Black	721 (87)	TSS	0 089	124	TSS	0 053	75

Subcategories	Effluent Limitations: Average of Daily Value for Thirty Consecutive Days Shall Not Exceed Parameter	kg/kkg[1]	mg/L	Maximum Value for Any One Day Parameter	kg/kkg[1]	mg/L
Subcategory A Furnace Black	--- No Discharge of Process Wastewater Pollutants ---					
Subcategory B Thermal Black	TSS	--[2]	--[2]	TSS	--[2]	--[2]

[1] kg/kkg production is equivalent to lb /1 000 lbs production

[2] Data for developing performance factors for treatment plant operations is not available but needs to be developed with experience in the industry

NOTICE: THESE ARE TENTATIVE RECOMMENDATIONS BASED UPON INFORMATION IN THIS REPORT AND ARE SUBJECT TO CHANGE BASED UPON COMMENTS RECEIVED AND FURTHER INTERNAL REVIEW BY EPA

DRAFT

The actual effluent limitations guidelines would be applied directly only to a plant whose manufacturing processes fall within a single subcategory. In the case of multi-subcategory plants the effluent limitations guidelines to be placed upon a plant would represent the sum of the individual effluent limitations applied to each of its subcategory operations. This building-block approach allows the system to be applied to any facility regardless of its unique set of processes.

It should be noted that BPCTCA treatment technology, as discussed in Section VII, has been designed with TSS removal as the primary design consideration.

NOTICE: THESE ARE TENTATIVE RECOMMENDATIONS BASED UPON INFORMATION IN THIS REPORT AND ARE SUBJECT TO CHANGE BASED UPON COMMENTS RECEIVED AND FURTHER INTERNAL REVIEW BY EPA.

G. Photographic Processing Industry

Effluent limitations guidelines for the entire Photographic Processing industry were developed by applying the in-plant measures and end-of-pipe treatment model presented in Section VII. The in-plant measures include silver recovery, bleach regeneration, and squeegee installation. The raw waste loads developed from the three processing plants visited were subject to percentage removals commensurate with these controls. The variability in this system is discussed in Section XIII.

The design data from the large-scale activated sludge unit was the basis of the BOD_5, COD, and silver thiosulfate reduction obtainable through BPCTCA presented in Table IXG-1. Although the effluent limitation guidelines for BPCTCA may be attained by a number of combinations of in-process and end-of-process means, the numerical values for these guidelines were calculated by the application of waste reduction factors in the BPCTCA treatment model for BOD, COD, and silver thiosulfate parameters. The reduction factors are as follows:

BOD_5 - 85 percent reduction (effluent is 15 percent of RWL)
COD - 50 percent reduction (effluent is 50 percent of RWL)
Silver thiosulfate - 80 percent reduction (effluent is 20 percent of RWL)

The concentration limitatin placed on ferrocyanide was based on studies which indicated that cyanide in levels greater than 1 mg/L inhibited biological systems. Insufficient data on TSS removal rates by the biological system prevents a direct determination of an effluent limitation for the industry; however, based on technology transfer from other industries, a daily average concentration of 20 mg/L of suspended solids has been set.

NOTICE: THESE ARE TENTATIVE RECOMMENDATIONS BASED UPON INFORMATION IN THIS REPORT AND ARE SUBJECT TO CHANGE BASED UPON COMMENTS RECEIVED AND FURTHER INTERNAL REVIEW BY EPA.

Table IXG-1

BPCTCA Effluent Limitations Guidelines
Photographic Processing Industry

Subcategory	Flow	Raw Waste Load (RW)			BPCTCA Long-Term Average Daily Effluent		Effluent Limitations: Average of Daily Values for 30 Consecutive Days Shall Not Exceed		Effluent Limitations: Maximum for Any One Day	
	L/1,000 sq m (gal/1,000 sq ft)	Parameter	kg/1,000 sq m (lb/1,000 sq ft)	mg/L	kg/1,000 (lb/1,000 sq ft)	mg/L	kg/1,000 (lb/1,000 sq ft)	mg/L	kg/1,000 (lb/1,000 sq ft)	mg/L
Entire Industry	120,000 (2,960)	BOD_5	36 (7.36)	298	5.4 (1.11)	45	12.4 (2.54)	-	22.1 (4.55)	-
		COD	129 (26.4)	1070	64.5 (13.2)	535	135 (27.7)	-	187 (38.3)	-
		TSS			-	20	-	52	-	100
		Silver Thio-sulfate as Ag	0.07 (0.014)	0.6	0.015 (0.003)	0.1	0.038 (0.008)	-	0.073 (0.015)	-
		Ferrocyanide	0.58 (0.012)	4.9	-	1.35	-	3.5		6.8

NOTICE: THESE ARE TENTATIVE RECOMMENDATIONS BASED UPON INFORMATION IN THIS REPORT AND ARE SUBJECT TO CHANGE BASED UPON COMMENTS RECEIVED AND FURTHER INTERNAL REVIEW BY EPA.

DRAFT

H. Hospitals

Based on the information contained in Sections III through VIII of this report, effluent limitations guidelines commensurate with the best practicable control technology currently available have been established for hospitals. The limitations which explicitly set numerical values for allowable pollutant discharges are presented in Table IXH-1. The effluent limitations guidelines specify allowable discharges of BOD_5 and TSS based on removals attainable through application of BPCTCA pollution control technology described in Section VII of this report. Model BPCTCA waste treatment technology includes biological treatment with sludge handling facilities consisting of digestion, dewatering, and ultimate disposal via a sanitary landfill.

As indicated in Section VII, a BOD_5 removal efficiency of 93 percent, based on historical treatment plant data, was selected as being applicable for the determination of BPCTCA effluent limitations guidelines. Promulgation of effluent TSS limitations based on historical TSS removal efficiencies is not feasible in that activated sludge treatment systems generate biological solids. The BPCTCA model treatment plant has been designed to include a flocculator-clarifier with polymer addition. Such systems have been shown to be capable of achieving extremely efficient TSS removal. On this basis, a TSS effluent limitation guidelines of 20 mg/L is recommended. If a more severe restrictions for total suspended solids is desired, it should be established on the basis of water quality objectives.

The objective of these effluent limitations guidelines is to provide inducement for reduction of both flow and contaminant loading prior to end-of-pipe treatment. However, it is not the intent of these effluent limitations guidelines to specify either the unit wastewater flow which must be achieved, or the wastewater treatment practices which must be employed at individual hospitals.

NOTICE: THESE ARE TENTATIVE RECOMMENDATIONS BASED UPON INFORMATION IN THIS REPORT AND ARE SUBJECT TO CHANGE BASED UPON COMMENTS RECEIVED AND FURTHER INTERNAL REVIEW BY EPA.

Table IXH-1

BPCTCA Effluent Limitations Guidelines

Hospitals

Subcategories	Flow L/1,000 occupied beds (gal/1,000 occupied beds)	Raw Waste Load (RWL) Parameter	kg/1,000 occupied beds (lb/1,000 occupied beds)	mg/L	BPCTCA (1977) Long-Term Average Daily Effluent Parameter	kg/1,000 occupied beds (lb/1,000 occupied beds)	mg/L
Hospitals	1,210,000 (319,000)	BOD_5	266 (587)	221	BOD_5	18.6 (41.1)	15
		TSS	-	-	TSS	-	20

Effluent Limitations: Average of Daily Values for Thirty Consecutive Days Shall Not Exceed Parameter	kg/1,000 occupied beds (lb/1,000 occupied beds)	mg/L	Maximum for Any One Day Parameter	kg/1,000 occupied beds (lb/1,000 occupied beds)	mg/L
BOD_5	26 (58)	-	BOD_5	30 (66)	-
TSS	-	28	TSS	-	30

NOTICE THESE ARE TENTATIVE RECOMMENDATIONS BASED UPON INFORMATION IN THIS REPORT AND ARE SUBJECT TO CHANGE BASED UPON COMMENTS RECEIVED AND FURTHER INTERNAL REVIEW BY EPA.

DRAFT

SECTION X

BEST AVAILABLE TECHNOLOGY ECONOMICALLY ACHIEVABLE

General

The effluent limitations guidelines to be achieved by all plants by July 1, 1983 through the application of the best available technology economically achievable (BATEA) are based upon the very best control and treatment technology employed by the existing exemplary plants in each industrial subcategory. In those industrial subcategories where this level of control and treatment technology was found inadequate for the purpose of defining BATEA, control and treatment technologies transferrable from other industries or technology demonstrated in pilot plant studies were employed.

BATEA in-plant technology and end-of-pipe systems for the individual industrial categories are discussed in the following text.

NOTICE: THESE ARE TENTATIVE RECOMMENDATIONS BASED UPON INFORMATION IN THIS REPORT AND ARE SUBJECT TO CHANGE BASED UPON COMMENTS RECEIVED AND FURTHER INTERNAL REVIEW BY EPA.

A. Pharmaceutical Industry

Effluent limitations guidelines commensurate with the best available technology economically achievable are presented in Table XA-1. BATEA effluent limitations guidelines were developed by evaluating those end-of-pipe modifications which seemed applicable for achieving better effluent quality. The BATEA effluent limitations guidelines presented in this section can be attained with the end-of-pipe treatment technology outlined in Section VII, which consists of the addition of dual-media filtration and activated carbon adsorption to the proposed BPCTCA technology for sub-categories A and C_1. BATEA effluent limitations guidelines for subcategories B, D and E are based on the addition of dual-media gravity filtration to the proposed BPCTCA technology. For subcategory C_2, BATEA effluent limitations guidelines are the same as BPCTCA effluent limitations guidelines.

BATEA effluent limitations guidelines were developed by the following procedure:

1. Based on the contractor's experience with application of dual-media filtration in other industries, filtration information contained in Process Design Manual for Upgrading Existing Wastewater Treatment Plants (EPA 1974), and information contained in other literature, the following effluent TSS concentrations were selected as being achievable by dual-media filtration of biologically treated wastes.

Subcategory	Effluent TSS, mg/L
A, C_1	20
B, D, E	10

2. As discussed in Section VII, samples of biological treatment plant effluents were filtered to determine the BOD_5 and COD concentrations associated with TSS. Based on those tests, the following relationships were developed:

$$\frac{BOD_5}{TSS} = 0.20 \qquad \frac{COD}{TSS} = 1.14$$

The amount of BOD_5 and COD that could be removed by filtration was then calculated by multiplying the expected TSS removal by the above relationships. For example: BOD_5 due to filtration = 0.20 (BPCTCA TSS effluent limitation - BATEA TSS effluent limitation).

NOTICE: THESE ARE TENTATIVE RECOMMENDATIONS BASED UPON INFORMATION IN THIS REPORT AND ARE SUBJECT TO CHANGE BASED UPON COMMENTS RECEIVED AND FURTHER INTERNAL REVIEW BY EPA.

Effluent limitations guidelines for dual-media filter effluents were then calculated by subtracting from the BPCTCA effluent limitations guidelines the BOD_5 and COD removed by filtration. In the case of subcategories B, D, and E these values have been used as the BATEA effluent limitations guidelines.

3. For subcategories A and C_1, the values obtained by the procedure discussed above were further reduced by applying the following removal efficiencies, which are achievable by the use of activated carbon adsorption.

Parameter	Activated Carbon Treatment Efficiencies (percent)
BOD_5	77
COD	80

As discussed in Section VII, these treatment efficiencies were based on results of laboratory carbon isotherm tests. As actual full-scale performance data become available, effluent limitations guidelines based on these performance standards will be re-evaluated.

In cases where compliance with one of the effluent limitationsguidelines would require treating to levels below the limitations for the remaining parameters, determination of compliance should be based on the following controlling parameters:

Subcategory	Controlling Limitations
A, C_1, C_2	COD, TSS
B, D, E	BOD_5, TSS

NOTICE: THESE ARE TENTATIVE RECOMMENDATIONS BASED UPON INFORMATION IN THIS REPORT AND ARE SUBJECT TO CHANGE BASED UPON COMMENTS RECEIVED AND FURTHER INTERNAL REVIEW BY EPA.

Table XA-1

BATEA Effluent Limitations Guidelines

Pharmaceuticals Industry

Subcategories	Flow L/kkg Product (gal/1,000 lbs)	BPCTCA Long-Term Average Daily Effluent			BATEA (1983) Long-Term Average Daily Effluent			Effluent Limitations: Average of Daily Values for 30 Consecutive Days Shall Not Exceed			Effluent Limitations: Maximum for Any One Day		
		Parameter	kg/kkg[1]	mg/L	Parameter	kg/kkg[1]	mg/L	Parameter	kg/kkg[1]	mg/L	Parameter	kg/kkg[1]	mg/L
Subcategory A Fermentation	See Figure VA-4	BOD_5	See Figure IIA-1		BOD_5	See Figure IIA-2		BOD_5	Avg.Daily x 2.3		BOD_5	Avg.Daily x 4 1	
		COD	See Figure IIA-1		COD	See Figure IIA-2		COD	Avg.Daily x 2.1		COD	Avg.Daily x 2.9	
		TSS	--	50	TSS	--	20	TSS	--	52	TSS	--	100
Subcategory B Biological and Natural Extractions	558,000 (67,000)	BOD_5	10.1	18	BOD_5	8.93	16	BOD_5	20.5	--	BOD_5	36.6	--
		COD	29.6	53	COD	23.5	42	COD	49.4	--	COD	68.2	--
		TSS	--	20	TSS	--	10	TSS	--	26	TSS	--	50
Subcategory C_1 Chemical Synthesis	160,000 (19,200)	BOD_5	21.1	132	BOD_5	4.6	29	BOD_5	10.6	--	BOD_5	18.9	--
		COD	62.9	394	COD	11.5	72	COD	24.2	--	COD	33.4	--
		TSS	--	50	TSS	--	20	TSS	--	52	TSS	--	100
Subcategory C_2 Chemical Synthesis Synthetic Antibiotic Production	100,000 (12,000)	BOD_5	52	525	BOD_5	52	525	BOD_5	120	--	BOD_5	213	--
		COD	66	667	COD	66	667	COD	139	--	COD	191	--
		TSS	--	20	TSS	--	20	TSS	--	52	TSS	--	100
Subcategory D Formulation	14,600 (1,750)	BOD_5	0.57	39	BOD_5	0.54	37	BOD_5	1.24	--	BOD_5	2.21	--
		COD	1.62	111	COD	1.46	100	COD	3.07	--	COD	4.23	--
		TSS	--	20	TSS	--	10	TSS	--	26	TSS	--	50
Subcategory E[2] Research	11,600 lit/1,000 sq m (285 gal/1,000 sq ft)	BOD_5	0.12[3] (0.025)[4]	11	BOD_5	0.10[3] (0.021)[4]	9	BOD_5	0.23[3] (0.048)[4]	--	BOD_5	0.41[3] (0.086)[4]	--
		COD	0.40[3] (0.081)[4]	34	COD	0.27[3] (0.055)[4]	23	COD	0.57[3] (0.116)[4]	--	COD	0.78[3] (0.160)[4]	
		TSS	--	20	TSS	--	10	TSS	--	26	TSS	--	50

[1] kg/kkg production is equivalent to lbs/1,000 lbs production
[2] Effluent limitations for subcategory E are based on gross floor area
[3] kg/1,000 sq m
[4] lb/1,000 sq ft

NOTICE: THESE ARE TENTATIVE RECOMMENDATIONS BASED UPON INFORMATION IN THIS REPORT AND ARE SUBJECT TO CHANGE BASED UPON COMMENTS RECEIVED AND FURTHER INTERNAL REVIEW BY EPA.

DRAFT

B. Gum and Wood Chemicals Industry

Treatment commensurate with BATEA for Gum and Wood Chemicals industry requires the application of activated carbon adsorption to filtered effluent from the biological treatment system described for BPCTCA, or the use of second stage biological treatment in series with the BPCTCA. The specific choice of waste treatment systems should depend on the specific process, or group of processes, in operation at any given facility.

The performance of these systems has been discussed in Section VII - Control and Treatment Technologies. Incremental waste reduction associated with these technologies for BOD_5 and COD parameters are:

BOD_5 - 70 percent reduction (BATEA effluent is 30 percent of a BPCTCA effluent)

COD - 70 percent reduction (BATEA effluent is 30 percent of a BPCTCA effluent)

Effluent limitations guidelines for BATEA were calculated by applying the above reduction factors to average effluent for BPCTCA shown in Table IXB-1.

The effluent limitations guidelines for BATEA are presented in Table XB-1. Again, it must be understood that the BOD_5 and COD values as presented are average daily effluent limitations guidelines for BATEA and should not be directly applied before adjustment for variation in treatment plant performance, as presented in Section XIII.

NOTICE: THESE ARE TENTATIVE RECOMMENDATIONS BASED UPON INFORMATION IN THIS REPORT AND ARE SUBJECT TO CHANGE BASED UPON COMMENTS RECEIVED AND FURTHER INTERNAL REVIEW BY EPA.

Table XB-1
BATEA Effluent Limitations Guidelines
Gum and Wood Chemicals Industry

Subcategories	Flow L/kkg Product (gal/1,000 lbs.)	BPCTCA Long-Term Average Daily Effluent Parameter	kg/kkg[1]	mg/L	BATEA (1983) Long-Term Average Daily Effluent Parameter	kg/kkg[1]	mg/L	Effluent Limitations: Average of Daily Value for 30 Consecutive Days Shall Not Exceed Parameter	kg/kkg[1]	mg/L	Maximum for Any One Day Parameter	kg/kkg[1]	mg/L
Subcategory A													
Char and Charcoal Briquets		No Discharge of Process Wastewater Pollutants											
Subcategory B													
Gum Rosin and Turpentine	528 (63.4)	BOD_5	0.22	420	BOD_5	0.066	125	BOD_5	0.11	--	BOD_5	0.14	--
		COD^5	2.27	4,300	COD^5	0.68	1,290	COD^5	1.09	--	COD^5	1.36	--
		TSS	--	50	TSS	--	20	TSS	--	34	TSS	--	40
Subcategory C													
Wood Rosin, Turpentine and Pine Oil	9,470 (1,140)	BOD_5	0.32	34	BOD_5	0.096	10	BOD_5	0.16	--	BOD_5	0.20	--
		COD^5	3.40	360	COD^5	1.02	107	COD^5	1.63	--	COD^5	2.04	--
		TSS	--	50	TSS	--	20	TSS	--	34	TSS	--	40
Subcategory D													
Tall Oil Rosin, Pitch, and Fatty Acids	4,860 (583)	BOD_5	0.16	32	BOD_5	0.048	10	BOD_5	0.082	--	BOD_5	0.10	--
		COD^5	1.91	394	COD^5	0.57	118	COD^5	0.91	--	COD^5	1.14	--
		TSS	--	50	TSS	--	20	TSS	--	34	TSS	--	40
Subcategory E													
Essential Oils	62,100 (7,450)	BOD_5	3.54	57	BOD_5	1.06	17	BOD_5	1.80	--	BOD_5	2.23	--
		COD^5	23.5	378	COD^5	7.05	113	COD^5	11.30	--	COD^5	14.1	--
		TSS	--	50	TSS	--	20	TSS	--	34	TSS	--	40
Subcategory F													
Rosin Derivatives	309 (37)	BOD_5	0.22	711	BOD_5	0.066	214	BOD_5	0.11	--	BOD_5	0.14	--
		COD^5	2.32	7,510	COD^5	0.70	2,260	COD^5	1.12	--	COD^5	1.40	--
		TSS	--	50	TSS	--	20	TSS	--	34	TSS	--	40

[1] kg/kkg product is equivalent to lbs./1,000 lbs. production

NOTICE: THESE ARE TENTATIVE RECOMMENDATIONS BASED UPON INFORMATION IN THIS REPORT AND ARE SUBJECT TO CHANGE BASED UPON COMMENTS RECEIVED AND FURTHER INTERNAL REVIEW BY EPA.

DRAFT

C. Pesticides and Agricultural Chemicals Industry

Best available technology economically achievable (BATEA) for the pesticides segment of the miscellaneous chemicals pojnt source category is based upon end-of-process treatment technologies. The wide diversity of the Pesticides and Agriculture Chemicals industry prevents describing a concise list of in-plant control techniques applicable to the industry as a whole under BATEA. This problem is aggravated by the fact that the industry zealously guards information relating to the nature of a specific manufacturing process. This secrecy may or may not be warranted in order to maintain a competitive position. However, it makes the development of effluent limitations guidelines utilizing considerable in-plant control impossible. Therefore, although the use of in-plant techniques may represent a viable alternative for specific manufacturers, general effluent limitations guidelines for BATEA have been developed based upon the application of additional end-of-pipe treatment technologies. Treatment commensurate with BATEA requires the application of multi-media filtration and activated carbon adsorption to the effluent from the activated sludge treatment proposed under BPCTCA.

Effluent limitations guidelines for each subcategory of pesticides manufactured are presented in Table IIC-2.

BATEA COD effluent limitations guidelines are based on achievement of 75 percent COD removal by the activated carbon system. TSS limitations are based on filtration information contained in Process Design Manual for Upgrading Existing Wastewater Treatment Plants, EPA, 1974, and information contained in other literature.

The application of BATEA treatment technology will not have a significant effect on other pollutant parameters limited by BPCTCA guidelines. Consequently, the recommended BATEA effluent limitations guidelines for these parameters are identical to those specified under BPCTCA effluent limitations.

NOTICE: THESE ARE TENTATIVE RECOMMENDATIONS BASED UPON INFORMATION IN THIS REPORT AND ARE SUBJECT TO CHANGE BASED UPON COMMENTS RECEIVED AND FURTHER INTERNAL REVIEW BY EPA.

Table XC-1
BATEA Effluent Limitations Guidelines

Pesticides and Agricultural Chemicals Industry

Subcategories	Flow L/kkg Product (gal/1,000 lbs.)	BPCTCA Long-Term Average Daily Effluent Parameter	kg/kkg[1]	mg/L	BATEA (1983) Long-Term Average Daily Effluent Parameter	kg/kkg[1]	mg/L	Effluent Limitations: Average of Daily Values for 30 Consecutive Days Shall Not Exceed Parameter	kg/kkg[1]	mg/L	Effluent Limitations: Maximum for Any One Day Parameter	kg/kkg[1]	mg/L
Subcategory A													
Halogenated Organic Pesticides	14,600 (1,750)	BOD_5	0.44	30	BOD_5	0.44	--	BOD_5	1.01	--	BOD_5	1.80	--
		Phenol	0.00073	0.05	Phenol	0.00073	--	Phenol	0.0015	--	Phenol	0.0020	--
		COD	--	--	COD	0.73	--	COD	1.53	--	COD	2.12	--
		TSS	--	40	TSS	--	20	TSS	--	42	TSS	--	78
Subcategory B													
Organic Phosphorus Pesticides	25,000 (3,000)	BOD_5	0.73	30	BOD_5	0.73	--	BOD_5	1.68	--	BOD_5	2.99	--
		Total P	0.08	3	Total P	0 08	--	Total P	0.17	--	Total P	2.23	--
		TKN	0.24	10	TKN	0.24	--	TKN	0.50	--	TKN	0.70	--
		Phenol	0.00073	0 03	Phenol	0.00073	--	Phenol	0.0015	--	Phenol	0.002	--
		Cyanide[2]	0.00037	0.01	Cyanide[2]	0.00037	--	Cyanide[2]	0.00078	--	Cyanide[2]	0.0010	--
		COD	--	--	COD	1.22	--	COD	2.56	--	COD	3.54	--
		TSS	--	40	TSS	--	20	TSS	--	42	TSS	--	78
Subcategory C													
Organo-Nitrogen Pesticides	30,800 (3,700)	BOD_5	0.92	30	BOD_5	0.92	--	BOD_5	2.12	--	BOD_5	3.77	--
		TKN^5	0.62	20	TKN^5	0.62	--	TKN^5	1.30	--	TKN^5	1.80	--
		Cyanide[2]	0.00036	0.01	Cyanide[2]	0.00036	--	Cyanide[2]	0.00076	--	Cyanide[2]	0.0010	--
		COD	--	--	COD	3.06	--	COD	6.43	--	COD	8.87	--
		TSS	--	40	TSS	--	20	TSS	--	42	TSS	--	78
Subcategory D													
Metallo-Organic Pesticides	66,700 (8,000)	BOD_5	2.0	30	BOD_5	2.0	--	BOD_5	4.6	--	BOD_5	8.2	--
		TKN^5	1.34	20	TKN^5	1.34	--	TKN^5	2.81	--	TKN^5	3.89	--
		Metals[3]	0.0014	0.02	Metals[3]	0.0014	--	Metals[3]	0.0029	--	Metals[3]	0.004	--
		COD	--	--	COD	3.34	--	COD	7.01	--	COD	9.7	--
		TSS	--	40	TSS	--	20	TSS	--	42	TSS	--	78
Subcategory E													
Formulators & Packagers Water-Based Products	1,330 (160)	BOD_5	0.40	30	BOD_5	0 40	--	BOD_5	0.92	--	BOD_5	1.64	--
		TKN^5	0.014	10	TKN^5	0.014	--	TKN^5	0.029	--	TKN^5	0.04	--
		COD	--	--	COD	0.067	--	COD	0.14	--	COD	0.19	--
		TSS	--	40	TSS	--	20	TSS	--	42	TSS	--	78
Subcategory F													
Formulators & Packagers Solvent-Based Dry Products		No Discharge of Process Wastewater Pollutants											

[1] kg/kkg production is equivalent to lbs/1,000 production

[2] Only applicable when cyanide compounds can enter the effluent

[3] Limitations are applicable individually for each metal that can enter the [illegible]

NOTICE: THESE ARE TENTATIVE RECOMMENDATIONS BASED UPON INFORMATION IN THIS REPORT AND ARE SUBJECT TO CHANGE BASED UPON COMMENTS RECEIVED AND FURTHER INTERNAL REVIEW BY EPA.

DRAFT

D. Adhesive and Sealants Industry

Effluent limitations guidelines commensurate with the best available technology economically achievable and with new-source performance standards are identical for subcategories B and C. It must be recognized that, in most cases, in-process modifications to existing plants are equivalent to those which can be designed for new ones. Although there are specific systems which can effectively reduce the RWL from particular processes to zero, these "zero discharge" systems may or may not be uniformly applicable throughout each subcategory. Investigations should be conducted for all types of adhesive wastewaters to see if the wastewaters can be totally recycled or to see if the wastewater discharges can be eliminated altogether. The specific systems and associated processes are identified in Section IV of this report.

None of the plants sampled during the data collection program had end-of-pipe treatment systems, and therefore, information collected was inadequate for establishing effluent limitations commensurate with the best available technology economically achievable or with new-source performance standards. A thorough investigation of available literature, treatability studies for similar wastewaters, and the contractor's experience in this area were utilized to supplement existing data in the development of the treatment systems and effluent limitations guidelines.

The BATEA treatment system for subcategory A included BPCTCA plus additional biological treatment followed by dual-media filtration. The end-of-pipe treatment system proposed for BATEA and BADCT for subcategories B and C is identical to BPCTCA, i.e., double effect evaporation preceded by an equalization basin or surge tank.

Each of the BATEA and BADCT effluent limitations guidelines is attainable with the treatment systems indicated. However, each plant should use those treatment processes which are applicable to its own wastewater.

The BATEA limitations proposed represent a combination of in-process and end-of-pipe control measures. The specific nature of this combination depends on the contact process wastewater flow to which the control measures are applied. This is not meant to imply that reduction in water usage is an acceptable substitute for reduction of pollutant loads. However, practical technical considerations dictate that most in-plant modifications for decreasing contact process water flow do not reduce he accompanying pollutant loadings in the same proportion.

NOTICE: THESE ARE TENTATIVE RECOMMENDATIONS BASED UPON INFORMATION IN THIS REPORT AND ARE SUBJECT TO CHANGE BASED UPON COMMENTS RECEIVED AND FURTHER INTERNAL REVIEW BY EPA.

BATEA effluent limitations guidelines are based upon the following removals from BPCTCA:

Parameter	Percent Removal of BPCTCA Effluent
BOD Removal	49%
COD Removal	49%

The BATEA effluent limitations guidelines were developed by applying these treatment efficiencies to BPCTCA effluent as shown in Table XD-1.

NOTICE: THESE ARE TENTATIVE RECOMMENDATIONS BASED UPON INFORMATION IN THIS REPORT AND ARE SUBJECT TO CHANGE BASED UPON COMMENTS RECEIVED AND FURTHER INTERNAL REVIEW BY EPA.

Table XD-1

BATEA Effluent Limitations Guidelines

Adhesive and Sealants Industry

Subcategories	Flow L/kkg Product (gal/1,000 lbs)	BPCTCA Long-Term Average Daily Effluent Parameter	kg/kkg[1]	mg/L	BATEA (1983) Long-Term Average Daily Effluent Parameter	kg/kkg[1]	mg/L	Effluent Limitations: Average of Daily Values for 30 Consecutive Days Shall Not Exceed Parameter	kg/kkg[1]	mg/L	Effluent Limitations: Maximum for Any One Day Parameter	kg/kkg[1]	mg/L
Subcategory A Water-Based Animal Glues and Gelatins	250,000 (30,000)	BOD_5 COD TSS	65.9 176 --	265 710 50	BOD_5 COD TSS	25 66.9 --	100 267 20	BOD_5 COD TSS	57.5 140 --	-- -- 52	BOD_5 COD TSS	103 194 --	-- -- 100
Subcategory B Water-Based Adhesive Solutions Containing Synthetic and Natural Materials	940 (113)	BOD_5 COD TSS	0.24 1.09 --	255 1,300 20	BOD_5 COD TSS	0.24 1.09 --	255 1,160 20	BOD_5 COD TSS	0.55 2.29 --	-- -- 52	BOD_5 COD TSS	0.98 3.16 --	-- -- 100
Subcategory C Solvent Solution Adhesives and Cements Generating Contaminant Wastewaters	340 (41)	BOD_5 COD TSS	0.31 0.51 --	910 1,530 20	BOD_5 COD TSS	0.31 0.51 --	910 1,150 20	BOD_5 COD TSS	0.71 1.07 --	-- -- 52	BOD_5 COD TSS	1.27 1.48 --	-- -- 100
Subcategory D Solvent Solution Adhesives and Cements Generating Non-Contact Cooling Water Only		No Discharge of Process Wastewater Pollutants											
Subcategory E Solid and Semi-Solid Hot Melt Thermoplastic Adhesives		No Discharge of Process Wastewater Pollutants											
Subcategory F Dry-Blended Adhesive Materials		No Discharge of Process Wastewater Pollutants											

[1] kg/kkg production is equivalent to lbs/1,000 lbs production

NOTICE THESE ARE TENTATIVE RECOMMENDATIONS BASED UPON INFORMATION IN THIS REPORT AND ARE SUBJECT TO CHANGE BASED UPON COMMENTS RECEIVED AND FURTHER INTERNAL REVIEW BY EPA

DRAFT

E. Explosives Industry

The BATEA effluent limitation guidelines for the Explosives industry presented below have been developed from the best available technology presently operating in the field. Historical data was used to develop effluent limitations guidelines. For all subcategories, the BATEA treatment focuses on filtration and carbon adsorption. Published findings generally support the biodegradation of most explosives. Those explosives that are resistant to biodegration will be removed by carbon adsorption.

BATEA Effluent Limitation Guidelines

Explosives Industry

Parameter	Percent Removal of BPCTCA Effluent
BOD_5	72%
COD	79%
TSS	78%

Application of these removal rates to BPCTCA effluent waste loads is shown in Table XE-1.

NOTICE: THESE ARE TENTATIVE RECOMMENDATIONS BASED UPON INFORMATION IN THIS REPORT AND ARE SUBJECT TO CHANGE BASED UPON COMMENTS RECEIVED AND FURTHER INTERNAL REVIEW BY EPA.

Table XE-1

BATEA Effluent Limitations Guidelines

Explosives Industry

Subcategories	Flow	BPCTCA Long-Term Average Daily Effluent			BATEA (1983) Long-Term Average Daily Effluent			Effluent Limitations: Average of Daily Values for 30 Consecutive Days Shall Not Exceed			Effluent Limitations: Maximum for Any One Day		
	L/kkg Product (gal/1,000 lbs)	Parameter	kg/kkg[1]	mg/L	Parameter	kg/kkg[1]	mg/L	Parameter	kg/kkg	mg/L	Parameter	kg/kkg	mg/L
Subcategory A_1 Manufacture of Explosives	1,680 (201)	BOD_5	0.10	60	BOD_5	0.028	17	BOD_5	0.066	-	BOD_5	0.11	-
		COD^5	1.08	647	COD^5	0.23	136	COD^5	0.54	-	COD^5	0.88	-
		TSS	-	50	TSS	-	20	TSS	-	52	TSS	-	100
Subcategory A_2 Manufacture of Propellants	217,000 (26,000)	BOD_5	4.44	20	BOD_5	1.24	6	BOD_5	2.93	-	BOD_5	4.74	-
		COD^5	33	152	COD^5	6.90	32	COD^5	16.3	-	COD^5	26.3	-
		TSS	-	50	TSS	-	20	TSS	-	52	TSS	-	100
Subcategory B Load and Pack Operations	1,330 (160)	BOD_5	0.0003	0.2	BOD_5	0.00008	0.06	BOD_5	0.0002	-	BOD_5	0.0003	-
		COD^5	0.026	20	COD^5	0.005	4	COD^5	0.012	-	COD^5	0.019	-
		TSS	-	50	TSS	-	20	TSS	-	52	TSS	-	100
Subcategory C Manufacture of Initiators	170,000 (20,900)	BOD_5	88.2	507	BOD_5	24.7	142	BOD_5	58.3	-	BOD_5	94.4	-
		COD^5	1,830	10,500	COD^5	384	2,210	COD^5	932	-	COD^5	151	-
		TSS	-	50	TSS	-	20	TSS	-	52	TSS	-	100

[1] kg/kkg is equivalent to lb/1,000 lbs production.

NOTICE: THESE ARE TENTATIVE RECOMMENDATIONS BASED UPON INFORMATION IN THIS REPORT AND ARE SUBJECT TO CHANGE BASED UPON COMMENTS RECEIVED AND FURTHER INTERNAL REVIEW BY EPA.

DRAFT

F. Carbon Black Industry

Effluent limitations guidelines commensurate with the best available technology economically achievable are presented in Table XF-1. BATEA effluent limitations guidelines were developed by evaluating those end-of-pipe modifications which seemed applicable for achieving better effluent quality. The BATEA effluent limitations guidelines presented in this section are attainable with the end-of-pipe treatment technology outlined in Section VII, which consists of the addition of dual-media gravity filtration to the treatment system proposed for subcategory B as BPCTCA technology. BATEA effluent limitations guidelines for subcategory A will remain at no discharge of process wastewater pollutants.

As indicated in Section VII, the following treatment efficiencies in cremental over BPCTCA were considered to be applicable for determination of BATEA effluent limitations.

Subcategory	Effluent TSS
A	No discharge of process wastewater pollutants
B	60 percent

BATEA effluent limitations guidelines were developed by applying these treatment efficiencies to the BPCTCA effluent limitations guidelines shown in Table IXF-1.

The treatment efficiency for subcategory B was based on performance data for filtration processes used in other applications. As actual full-scale performance data become available, effluent limitations guidelines based on these removal efficiencies may require revision.

Although the thermal black plant visited discharged no wastewater, this fact cannot be uniformly applied to the entire industry to develop no discharge of process wastewater. This is due to the location of the facilities in question. As discussed in Section VII, it was not possible during the survey to gain sufficient access to individual manufacturing processes to quantitatively ascertain the effectiveness of in-plant control measures. Consequently, recommendations for specific in-plant process modifications for achieving better effluent quality have not been made.

NOTICE: THESE ARE TENTATIVE RECOMMENDATIONS BASED UPON INFORMATION IN THIS REPORT AND ARE SUBJECT TO CHANGE BASED UPON COMMENTS RECEIVED AND FURTHER INTERNAL REVIEW BY EPA.

Table XF-1

BATEA Effluent Limitations Guidelines

Carbon Black Industry

Subcategories	Flow L/kkg Product (gal/1,000 lbs.)	BPCTCA Long-Term Daily Effluent Parameter	kg/kkg[1]	mg/L	BATEA and BADCT Long-Term Average Daily Effluent Parameter	kg/kkg[1]	mg/L
Subcategory A Furnace Black		--- No Discharge of Process Wastewater Pollutants ---					
Subcategory B Thermal Black	721 (87)	TSS	0.053	75	TSS	0.021	30

	Effluent Limitations: Average of Daily Value for Thirty Consecutive Days Shall Not Exceed Parameter	kg/kkg[1]	mg/L	Maximum Value for Any One Day Parameter	kg/kkg[1]	mg/L
Subcategory A Furnace Black	--- No Discharge of Process Wastewater Pollutants ---					
Subcategory B Thermal Black	TSS	--[2]	--[2]	TSS	--[2]	--[2]

[1] kg/kkg production is equivalent to lbs /1,000 lbs. production.

[2] Data for developing performance factors for treatment plant operation is not available, but needs to be developed with experience in the industry

NOTICE: THESE ARE TENTATIVE RECOMMENDATIONS BASED UPON INFORMATION IN THIS REPORT AND ARE SUBJECT TO CHANGE BASED UPON COMMENTS RECEIVED AND FURTHER INTERNAL REVIEW BY EPA.

DRAFT

G. Photographic Processing Industry

Treatment commensurate with BATEA for the Photographic Processing industry requires the application of filtration to the effluent from BPCTCA biological treatment.

The performance of these systems has been discussed in Section VII. Incremental waste reduction possible with these technologies is:

BOD_5 - 33 percent reduction (BATEA effluent is 67 percent of BPCTCA effluent)

COD - 20 percent reduction (BATEA effluent is 80 percent of BPCTCA effluent)

Silver thiosulfate = 0 percent

Effluent limitations guidelines for BATEA were calculated by applying the above reduction factors to the BPCTCA effluent limitations guidelines as shown in Table IXG-1. Insufficient data on TSS removal rates prevented an effluent limitations guidelines determination for the industry, but, based on technology from other industries, a daily average concentration of 10 mg/L was set.

The effluent limitations guidelines for BATEA are presented in Table XG-1. Again, it must be understood that the BOD and COD values as presented are average daily effluent limitations guidelines for BATEA and should not be directly applied before compensating for variation in treatment plant performance in the manner described in Section XIII.

NOTICE: THESE ARE TENTATIVE RECOMMENDATIONS BASED UPON INFORMATION IN THIS REPORT AND ARE SUBJECT TO CHANGE BASED UPON COMMENTS RECEIVED AND FURTHER INTERNAL REVIEW BY EPA.

Table XG-1

BATEA Effluent Limitations Guidelines
Photographic Processing Industry

Subcategory	Flow L/1,000 sq m (gal/1,000 sq ft)	Parameter	BPCTCA Long-Term Average Daily Effluent kg/1,000 sq m (lbs/1,000 sq ft)	BPCTCA Long-Term Average Daily Effluent mg/L	BATEA and BADCT Effluent Limitations: Long-Term Average Daily kg/1,000 sq m (lbs/1,000 sq ft)	Long-Term Average Daily mg/L	Average of Daily Values for 30 Consecutive Days shall not exceed kg/1,000 sq m (lbs/1,000 sq ft)	Average of Daily Values mg/L	Maximum Value for Any One Day kg/1,000 sq m (lbs/1,000 sq ft)	Maximum Value for Any One Day mg/L
Entire Industry	120,000 (2,960)	BOD_5	5.4 (1.11)	45	3.6 (0.74)	30	8.28 (1.70)	-	14.8 (3.03)	-
		COD	64.5 (13.2)	534	51.6 (10.6)	427	108 (22.3)	-	150 (30.7)	-
		TSS	-	20	-	10	-	26	-	50
		Silver Thiosulfate (as Ag)	0.015 (0.003)	0.1	0.015 (0.003)	0.1	0.038 (0.008)	-	0.073 (0.015)	-
		Ferrocyanide	-	1.35	-	1.35	-	3.5	-	6.8

DRAFT

NOTICE: THESE ARE TENTATIVE RECOMMENDATIONS BASED UPON INFORMATION IN THIS REPORT AND ARE SUBJECT TO CHANGE BASED UPON COMMENTS RECEIVED AND FURTHER INTERNAL REVIEW BY EPA.

H. Hospitals

Effluent limitations guidelines commensurate with the best available techonology economically achievable are presented in Table XH-1. BATEA effluent limitations guidelines were developed by evaluating those end-of-pipe modifications which indicated applicability for achieving better effluent quality. The BATEA effluent limitations guidelines are attainable with the end-of-pipe treatment technology outlined in Section VII, which consists of the addition of dual-media filtration to the treatment system proposed as BPCTCA technology.

In absence of any performance data for dual-media filtration on the biological treatment effluent for Hospitals, the performance of the dual-media filters as contained in Process Design Manual for Upgrading Existing Wastewater Treatment Plants by EPA 1974 is considered applicable to the Hospitals wastewaters. The BATEA effluent limitations guidelines are based on this performance data. As additional plant performance data becomes available, it may be used to verify the initial judgements.

NOTICE: THESE ARE TENTATIVE RECOMMENDATIONS BASED UPON INFORMATION IN THIS REPORT AND ARE SUBJECT TO CHANGE BASED UPON COMMENTS RECEIVED AND FURTHER INTERNAL REVIEW BY EPA.

Table XH-1

BATEA Effluent Limitations Guidelines
Hospitals

Subcategory	Flow L/1,000 occupied beds (gal/1,000 occupied beds)	BPCTCA Long-Term Average Daily Effluent Parameter	kg/1,000 occupied beds (lb/1,000 occupied beds)	mg/L	BATEA (1983) and BADCT Long-Term Average Daily Effluent Parameter	kg/1,000 occupied beds (lb/1,000 occupied beds)	mg/L
Hospitals	1,210,000 (319,000)	BOD_5	18.6 (41.1)	15	BOD_5	12.1 (26.6)	10
		TSS	-	20	TSS	-	10

Effluent Limitations

Average of Daily Values for Thirty Consecutive Days Shall Not Exceed Parameter	kg/1,000 occupied beds (lb/1,000 occupied beds)	mg/L	Maximum for Any One Day Parameter	kg/1,000 occupied beds (lb/1,000 occupied beds)	mg/L
BOD_5	16.9 (37.2)	-	BOD_5	19.4 (42.6)	-
TSS	-	14	TSS	-	15

NOTICE: THESE ARE TENTATIVE RECOMMENDATIONS BASED UPON INFORMATION IN THIS REPORT AND ARE SUBJECT TO CHANGE BASED UPON COMMENTS RECEIVED AND FURTHER INTERNAL REVIEW BY EPA.

DRAFT

SECTION XI

NEW SOURCE PERFORMANCE STANDARDS

General

The term "new source" is defined in the Environmental Protection Act to mean "any source, the construction of which is commenced after the publication of proposed regulations prescribing a standard of performance". Technology applicable to new sources shall be the Best Available Demonstrated Control Technology, defined by a determination of what higher levels of pollution control can be attained through the use of improved production process and/or treatment techniques. Thus, in addition to considering the best in-plant and end-of-process control technology, BADCT technology is to be based upon an analysis of how the level of effluent may be reduced by changing the production process itself.

BADCT in-plant technology and end-of-pipe systems for individual industrial categories are discussed in the following text.

NOTICE: THESE ARE TENTATIVE RECOMMENDATIONS BASED UPON INFORMATION IN THIS REPORT AND ARE SUBJECT TO CHANGE BASED UPON COMMENTS RECEIVED AND FURTHER INTERNAL REVIEW BY EPA.

A. Pharmaceutical Industry

New source performance standards commensurate with BADCT for the Pharmaceutical industry are presented in Table XIA-1. These performance standards are attainable with the end-of-pipe treatment technology outlined in Section VII, which consists of the addition of filtration to the treatment system proposed as BPCTCA technology for subcategories A, B, C, D and E. New source performance standards for subcategory C are identical to BPCTCA limitations.

The wastewater treatment technology recommended for new source performance standards does not include the use of activated carbon adsorption, as this advanced wastewater treatment technology has not been sufficiently demonstrated in the Pharmaceutical industry to establish operating performance, reliability, and economics.

For subcategories B, D, and E, new source performance standards are identical to BATEA effluent limitations guidelines. The performance standards for subcategories A and C_1 were developed according to the rationale presented in Section X for determining pollutant removals obtainable by filtration. It is conceivable that in certain cases compliance with one of the specific performance standards presented in such cases determination of compliance should be based on BOD_5 and TSS performance standards.

With the construction of new pharmaceutical plants, potential exists for substitution of processes which produce lower raw waste loads for others with higher raw waste loads. However, no recommendations are made with regard to such process substitutions, since in most cases during the survey the access to individual manufacturing processes needed to develop such recommendations were not permitted. In addition, major changes in pharmaceutical manufacturing processes are subject to the approval of FDA and often require extensive research programs. Consequently, process modifications are not as readily expedited in the Pharmaceutical industry as within other industries.

NOTICE: THESE ARE TENTATIVE RECOMMENDATIONS BASED UPON INFORMATION IN THIS REPORT AND ARE SUBJECT TO CHANGE BASED UPON COMMENTS RECEIVED AND FURTHER INTERNAL REVIEW BY EPA.

Table XIA-1

New Source Performance Standards

Pharmaceutical Industry

Subcategories	Flow L/kkg Product (gal/1,000 lbs)	BPCTCA Long-Term Average Daily Effluent Parameter	kg/kkg[1]	mg/L	BADCT Long-Term Average Daily Effluent Parameter	kg/kkg[1]	mg/L	New Source Performance Standards: Average of Daily Values for 30 Consecutive Days Shall Not Exceed Parameter	kg/kkg[1]	mg/L	Maximum for Any One Day Parameter	kg/kkg[1]	mg/L
Subcategory A Fermentation	See Figure VA-4	BOD_5	See Figure IIA-1		BOD_5	See Figure IIA-3		BOD_5	Avg.Daily x 2.3		BOD_5	Avg.Daily x 4.1	
		COD	See Figure IIA-1		COD	See Figure IIA-3		COD	Avg.Daily x 2.1		COD	Avg.Daily x 2.9	
		TSS	--	50	TSS	--	20	TSS	--	52	TSS	--	52
Subcategory B Biological and Natural Extractions Products	558,000 (67,000)	BOD_5	10.1	18	BOD_5	8.93	16	BOD_5	20.5	--	BOD_5	36.6	--
		COD	29.6	53	COD	23.5	42	COD	49 4	--	[illegible]	68.2	--
		TSS	--	20	TSS	--	10	TSS	--	26	TSS	--	50
Subcategory C_1 Chemical Synthesis	160,000 (19,200)	BOD_5	21.1	132	BOD_5	20.1	126	BOD_5	46.2	--	BOD_5	82.4	--
		COD	62.9	394	COD	57.5	320	COD	121	--	COD	167	--
		TSS	--	50	TSS	--	20	TSS	--	52	TSS	--	100
Subcategory C_2 Chemical Synthesis Synthetic Antibiotic Production	100,000 (12,000)	BOD_5	52	525	BOD_5	52	525	BOD_5	120	--	BOD_5	213	--
		COD	66	667	COD	66	667	COD	139	--	COD	191	--
		TSS	--	20	TSS	--	20	TSS	--	52	TSS	--	100
Subcategory D Formulation	14,600 (1,750)	BOD_5	0.57	39	BOD_5	0.54	37	BOD_5	1.24	--	BOD_5	2.21	--
		COD	1.62	111	COD	1.46	100	COD	3.07	--	COD	4.23	--
		TSS	--	20	TSS	--	10	TSS	--	26	TSS	--	50
Subcategory E[2] Research	11,600[3] (285)[4]	BOD_5	0.12[5] (0.025)[6]	11	BOD_5	0.10[5] (0.021)[6]	9	BOD_5	0.23[5] (0.048)[6]	--	BOD_5	0.41[5] (0.086)[6]	--
		COD	0.40[5] (0.081)[6]	34	COD	0.27[5] (0.055)[6]	23	COD	0.57[5] (0.116)[6]	--	COD	0.78[5] (0.16)[6]	--
		TSS	--	20	TSS	--	10	TSS	--	26	TSS	--	50

[1] kg/kkg production is equivalent to lbs/1,000 lbs production
[2] Effluent limitations for subcategory E are based on gross floor area
[3] Liter/1,000 sq m
[4] gal/1,000 sq ft
[5] kg/1,000 sq m
[6] lb/1,000 sq ft

NOTICE: THESE ARE TENTATIVE RECOMMENDATIONS BASED UPON INFORMATION IN THIS REPORT AND ARE SUBJECT TO CHANGE BASED UPON COMMENTS RECEIVED AND FURTHER INTERNAL REVIEW BY EPA.

DRAFT

B. Gum and Wood Chemicals Industry

Best Available Demonstrated Control Technology (BADCT) for the Gum and Wood Chemicals industry is based upon the utilization of both in-process controls and end-of-pipe process treatment technologies, which include biological treatment as proposed for BPCTCA and removal of additional total suspended solids via effluent filtration. The reduction in BOD_5 and COD parameters via the filtration of BPCTCA effluent is as follows:

BOD_5 - 8 percent reduction of BPCTCA effluent

COD - 13 percent reduction of BPCTCA effluent

As with BATEA, suspended solids limitation is 20 mg/L, which will be applied to the effluent from the entire treatment facility.

Table XIB-1 indicates BADCT effluent limitations guidelines for the Gum and Wood Chemicals industry for subcategories B through F. As with BPCTCA and BATEA, the values shown for the average BADCT effluent should not be directly applied until they are adjusted, as presented in Table XIB-1, for variation in treatment plant performance as provided in Section XIII, Performance Factors in Treatment Plant Operations.

NOTICE: THESE ARE TENTATIVE RECOMMENDATIONS BASED UPON INFORMATION IN THIS REPORT AND ARE SUBJECT TO CHANGE BASED UPON COMMENTS RECEIVED AND FURTHER INTERNAL REVIEW BY EPA.

Table XIB-1
New Source Performance Standards
Gum and Wood Chemicals Industry

Subcategories	Flow L/kkg Product (gal/1,000 lbs.)	BPCTCA Long-Term Average Daily Effluent Parameter	kg/kkg[1]	mg/L	BADCT Long-Term Average Daily Effluent Parameter	kg/kkg[1]	mg/L	New Source Performance Standards: Average of Daily Value for 30 Consecutive Days Shall Not Exceed Parameter	kg/kkg[1]	mg/L	Maximum for Any One Day Parameter	kg/kkg[1]	mg/L
Subcategory A													
Char and Charcoal Briquets		No Discharge of Process Wastewater Pollutants											
Subcategory B													
Gum Rosin and Turpentine	528 (63.4)	BOD_5	0.22	420	BOD_5	0.20	379	BOD_5	0.34	--	BOD_5	0.42	--
		COD^5	2.27	4,300	COD^5	1.97	3,730	COD^5	3.15	--	COD^5	3.94	--
		TSS	--	50	TSS	--	20	TSS	--	34	TSS	--	40
Subcategory C													
Wood Rosin, Turpentine, and Pine Oil	9,470 (1,140)	BOD_5	0.32	34	BOD_5	0.29	31	BOD_5	0.49	--	BOD_5	0.61	--
		COD^5	3.40	360	COD^5	2.96	312	COD^5	4.74	--	COD^5	5.92	--
		TSS	--	50	TSS	--	20	TSS	--	34	TSS	--	40
Subcategory D													
Tall Oil Rosin, Pitch, and Fatty Acids	4,860 (583)	BOD_5	0.16	32	BOD_5	0.15	31	BOD_5	0.26	--	BOD_5	0.32	--
		COD^5	1.91	394	COD^5	1.66	343	COD^5	2.66	--	COD^5	3.32	--
		TSS	--	50	TSS	--	20	TSS	--	34	TSS	--	40
Subcategory E													
Essential Oils	62,100 (7,450)	BOD_5	3.54	57	BOD_5	3.26	52	BOD_5	5.54	--	BOD_5	6.85	--
		COD^5	23.5	378	COD^5	20.4	329	COD^5	32.60	--	COD^5	40.8	--
		TSS	--	50	TSS	--	20	TSS	--	34	TSS	--	40
Subcategory F													
Rosin Derivatives	309 (37)	BOD_5	0.22	711	BOD_5	0.20	647	BOD_5	0.34	--	BOD_5	0.42	--
		COD^5	2.32	7,510	COD^5	2.02	6,540	COD^5	3.23	--	COD^5	4.04	--
		TSS	--	50	TSS	--	20	TSS	--	34	TSS	--	40

[1] kg/kkg production is equivalent to lbs./1,000 lbs. production

NOTICE: THESE ARE TENTATIVE RECOMMENDATIONS BASED UPON INFORMATION IN THIS REPORT AND ARE SUBJECT TO CHANGE BASED UPON COMMENTS RECEIVED AND FURTHER INTERNAL REVIEW BY EPA.

DRAFT

C. Pesticides and Agricultural Chemicals Industry

New source performance standards commensurate with BADCT for the Pesticides and Agricultural Chemicals industry are presented in Table XIC-1.

Best Available Demonstrated Technology Control Technology proposed consits of addition of filtration to BPCTCA treatment model, as a means of further suspended solids removal. The recommended performance standards are identical to the BPCTCA values with the exception of TSS. The recommended TSS standards is 20 mg/L for all subcategories.

With the construction of new pesticides production facilities, potential exists for the application of in-plant pollution control measures which could reduce raw waste loads. However, no specific recommendations are made with regard to in-plant measures since sufficient data was not available to develop such recommendations in detail.

NOTICE: THESE ARE TENTATIVE RECOMMENDATIONS BASED UPON INFORMATION IN THIS REPORT AND ARE SUBJECT TO CHANGE BASED UPON COMMENTS RECEIVED AND FURTHER INTERNAL REVIEW BY EPA.

Table XIC-1

New Source Performance Standards

Pesticides and Agricultural Chemicals Industry

Subcategories	Flow L/kkg Product (gal/1,000 lbs)	BPCTCA Long-Term Average Daily Effluent Parameter	kg/kkg[1]	mg/L	BADCT Long-Term Average Daily Effluent Parameter	kg/kkg[1]	mg/L	New Source Performance Standards: Average of Daily Values for 30 Consecutive Days Shall Not Exceed Parameter	kg/kkg[1]	mg/L	Maximum for Any One Day Parameter	kg/kkg[1]	mg/L
Subcategory A													
Halogenated	14,600	BOD_5	0.44	-	BOD_5	0.44	-	BOD_5	1.01	-	BOD_5	1.80	-
Organic Pesticides	(1,750)	Phenol	0.00073	-	Phenol	0.00073	-	Phenol	0.0015	-	Phenol	0.0020	-
		TSS	-	40	TSS	-	20	TSS	-	42	TSS	-	78
Subcategory B													
Organo-Phosphorus	25,000	BOD_5	0.73	-	BOD_5	0.73	-	BOD_5	1.68	-	BOD_5	2.99	-
Pesticides	(3,000)	Total P	0.08	-	Total P	0.08	-	Total P	0.17	-	Total P	0.23	-
		TKN	0.24	-	TKN	0.24	-	TKN	0.50	-	TKN	0.70	-
		Phenol	0.00073	-	Phenol	0.00073	-	Phenol	0.0015	-	Phenol	0.0020	-
		Cyanide[2]	0.00037	-	Cyanide[2]	0.00037	-	Cyanide[2]	0.00078	-	Cyanide[2]	0.0010	-
		TSS	-	40	TSS	-	20	TSS	-	42	TSS	-	78
Subcategory C													
Organo-Nitrogen	30,800	BOD_5	0.92	-	BOD_5	0.92	-	BOD_5	2.12	-	BOD_5	3.77	-
Pesticides	(3,700)	TKN	0.62	-	TKN	0.62	-	TKN	1.30	-	TKN	1.80	-
		Cyanide[2]	0.00036	-	Cyanide[2]	0.00036	-	Cyanide[2]	0.00076	-	Cyanide[2]	0.0010	-
		TSS	-	40	TSS	-	20	TSS	-	42	TSS	-	78
Subcategory D													
Metallo-Organic	66,700	BOD_5	2.0	-	BOD_5	2.0	-	BOD_5	4.6	-	BOD_5	8.2	-
Pesticides	(8,000)	TKN	1.34	-	TKN	1.34	-	TKN	2.81	-	TKN	3.89	-
		Metals[3]	0.0014	-	Metals[3]	0.0014	-	Metals[3]	0.0029	-	Metals[3]	0.004	-
		TSS	-	40	TSS	-	20	TSS	-	42	TSS	-	78
Subcategory E_1													
Formulators and	1,330	BOD_5	0.4	-	BOD_5	0.4	-	BOD_5	0.92	-	BOD_5	1.64	-
Packagers	(160)	TKN	0.014	-	TKN	0.014	-	TKN	0.029	-	TKN	0.04	-
Water-Based Products		TSS	-	40	TSS	-	20	TSS	-	42	TSS	-	78
Subcategory E_2													
Formulators and Packagers Solvent-Based Dry Products		--- No Discharge of Process Wastewater Pollutants ---											

[1] kg/kkg production is equivalent to lbs./1,000 lbs. production.

[2] Only applicable when cyanide compounds can enter the effluent.

[3] Limitations are applicable individually for each metal that can enter the effluent.

NOTICE: THESE ARE TENTATIVE RECOMMENDATIONS BASED UPON INFORMATION IN THIS REPORT AND ARE SUBJECT TO CHANGE BASED UPON COMMENTS RECEIVED AND FURTHER INTERNAL REVIEW BY EPA.

DRAFT

D. Adhesive and Sealants Industry

Best Available Demonstrated Control Technology (BADCT) for the Adhesive and Sealants industry is based upon the utilization of both in-plant controls and end-of-pipe process treatment technologies. The end-of-pipe treatment technology for subcategory A includes biological treatment as proposed for BPCTCA and removal of additional total suspended solids via effluent filtration. New source performance standards were obtained by applying the following reduction in the BPCTCA effluents:

TSS removal = 60 percent

BOD_5 removal = 0.2 x TSS removed

COD removal = 1.14 x TSS removed

The end-of-pipe treatment technology for subcategories B and C are identical to those for BPCTCA which is a double effect evaporation preceded by an equalization basin or surge tank. The new source performance standards commensurate with BADCT are identical with BPCTCA for subcategories B and C.

NOTICE: THESE ARE TENTATIVE RECOMMENDATIONS BASED UPON INFORMATION IN THIS REPORT AND ARE SUBJECT TO CHANGE BASED UPON COMMENTS RECEIVED AND FURTHER INTERNAL REVIEW BY EPA.

Table XID-1

New Source Performance Standards

Adhesive & Sealants Industry

Subcategories	Flow L/kkg Product (gal/1,000 lbs)	BPCTCA Long-Term Average Daily Effluent Parameter	kg/kkg[1]	mg/L	New Source Performance Standard (BADCT) Long-Term Average Daily Effluent Parameter	kg/kkg[1]	mg/L	New Source Performance Standards: Average of Daily Values for 30 Consecutive Days Shall Not Exceed Parameter	kg/kkg[1]	mg/L	New Source Performance Standards: Maximum for Any One Day Parameter	kg/kkg[1]	mg/L
Subcategory A													
Water-Based Animal Glues and Gelatins	250,000 (30,000)	BOD_5	65.9	265	BOD_5	65	260	BOD_5	150	--	BOD_5	267	--
		COD	176	710	COD	170	680	COD	357	--	COD	493	--
		TSS	--	50	TSS	--	20	TSS	--	52	TSS	--	100
Subcategory B													
Water-Based Adhesive Solutions Containing Synthetic and Natural Materials	940 (113)	BOD_5	0.24	255	BOD_5	0.24	255	BOD_5	0.55	--	BOD_5	0.98	--
		COD	1.09	1,300	COD	1.09	1,160	COD	2.29	--	COD	3.16	--
		TSS	--	20	TSS	--	20	TSS	--	52	TSS	--	100
Subcategory C													
Solvent Solution Adhesives and Cements Generating Contaminant Wastewaters	340 (41)	BOD_5	0.31	910	BOD_5	0.31	910	BOD_5	0.71	--	BOD_5	1.27	--
		COD	0.51	1,530	COD	0.51	1,500	COD	1.07	--	COD	1.48	--
		TSS	--	20	TSS	--	20	TSS	--	52	TSS	--	100
Subcategory D													
Solvent Solution Adhesives and Cements Generating Non-Contact Cooling Water Only		No Discharge of Process Wastewater Pollutants											
Subcategory E													
Solid and Semi-Solid Hot Melt Thermoplastic Adhesives		No Discharge of Process Wastewater Pollutants											
Subcategory F													
Dry-Blended Adhesive Materials		No Discharge of Process Wastewater Pollutants											

[1] kg/kkg product is equivalent to lbs/1,000 lbs product

NOTICE THESE ARE TENTATIVE RECOMMENDATIONS BASED UPON INFORMATION IN THIS REPORT AND ARE SUBJECT TO CHANGE BASED UPON COMMENTS RECEIVED AND FURTHER INTERNAL REVIEW BY EPA.

DRAFT

E. Explosives Industry

BADCT is based upon the utilization of in-house controls and filtration as an addition to BPCTCA end-of-pipe processes. The BADCT limitations presented in Section VII were developed on the basis of the contractor's previous experience and EPA publications on the efficiency of a filter. The waste load reductions are presented below. Application of these removal rates to BPCTCA effluent production loads is shown in Table XIE-1.

New Source Performance Standards

Wasteload Reductions

Parameter	Percent Reduction of BPCTCA Effluent
BOD_5	8.0
COD	13.0
TSS	60.0

It was anticipated that, for this level of treatment, significant reduction of hydraulic loading will be implemented by application of good water management practices.

NOTICE: THESE ARE TENTATIVE RECOMMENDATIONS BASED UPON INFORMATION IN THIS REPORT AND ARE SUBJECT TO CHANGE BASED UPON COMMENTS RECEIVED AND FURTHER INTERNAL REVIEW BY EPA.

Table XIE-1

New Source Performance Standards

Explosives Industry

Subcategories	Flow L/kkg Product (gal/1,000 lbs)	BPCTCA Long-Term Average Daily Effluent Parameter	kg/kkg[1]	mg/L	BADCT Long-Term Average Daily Effluent Parameter	kg/kkg[1]	mg/L	New Source Performance Standards: Average of Daily Values for 30 Consecutive Days Shall Not Exceed Parameter	kg/kkg[1]	mg/L	Maximum for Any One Day Parameter	kg/kkg[1]	mg/L
Subcategory A_1 Manufacture of Explosives	1,680 (201)	BOD_5	0.10	60	BOD_5	0.097	55	BOD_5	0.22	--	BOD_5	3.5	--
		COD	1.08	647	COD	0.94	560	COD	2.2	--	COD	3.6	--
		TSS	--	50	TSS	--	20	TSS	--	52	TSS	--	100
Subcategory A_2 Manufacture of Propellants	217,000 (26,000)	BOD_5	4.44	20	BOD_5	4.08	19	BOD_5	9.63	--	BOD_5	15.6	--
		COD	33	152	COD	29	134	COD	68.5	--	COD	111	--
		TSS	--	50	TSS	--	20	TSS	--	52	TSS	--	100
Subcategory B Load and Pack Operations	1,330 (160)	BOD_5	0.0003	0.2	BOD_5	0.0003	0.2	BOD_5	0.0006	--	BOD_5	0.001	--
		COD	0.026	20	COD	0.023	17	COD	0.054	--	COD	0.088	--
		TSS	--	50	TSS	--	20	TSS	--	52	TSS	--	100
Subcategory C Manufacture of Initiators	170,000 (20,900)	BOD_5	88.2	507	BOD_5	81.1	466	BOD_5	191	--	BOD_5	310	--
		COD	1,830	10,500	COD	1,590	9,140	COD	3,750	--	COD	6,070	--
		TSS	--	50	TSS	--	20	TSS	--	52	TSS	--	100

[1] kg/kkg is equivalent to lb/1,000 lbs production

NOTICE: THESE ARE TENTATIVE RECOMMENDATIONS BASED UPON INFORMATION IN THIS REPORT AND ARE SUBJECT TO CHANGE BASED UPON COMMENTS RECEIVED AND FURTHER INTERNAL REVIEW BY EPA.

DRAFT

F. Carbon Black Industry

New source performance standards commensurate with BADCT for the Carbon Black industry are presented in Table XIF-1. These performance standards are attainable with the end-of-pipe treatment technology outlined in Section VII, which consists of the addition of filtration to the treatment system proposed as BPCTCA technology.

As indicated in Section VII, the following treatment efficiencies were selected as being applicable for determination of new source performance standards:

Subcategory	TSS Removal Efficiency (Incremental over BPCTCA)
A	No dicharge of process wastewater pollutants
B	60%

These removal efficiencies were selected on the basis of a review of the application of filtration to the other industries.
New source performance standards were developed by applying these treatment efficiencies to the BPCTCA effluent limitations shown in Table XIF-1.

No recommendations have been made regarding the substitution of processes which produce a lower raw waste load for others with higher raw waste load. In most instances, the access to individual manufacturing processes needed to develop such recommendations was not permitted.

Table XIF-1

New Source Performance Standards

Carbon Black Industry

Subcategory	Average Daily TSS kg/kkg
A	No discharge of process wastewater pollutants
B	0.021

NOTICE: THESE ARE TENTATIVE RECOMMENDATIONS BASED UPON INFORMATION IN THIS REPORT AND ARE SUBJECT TO CHANGE BASED UPON COMMENTS RECEIVED AND FURTHER INTERNAL REVIEW BY EPA.

G. Photographic Processing Industry

Best Available Demonstrated Control Technology (BADCT) for the Photographic Processing industry is based upon the utilization of both in-process controls and end-of-pipe process treatment technologies which include biological treatment as proposed for BATEA. Performance standards for BOD_5 and COD parameters are identical with the BATEA effluent limitations guidelines. Table XIG-1 presents BADCT performance standards for the Photographic Processing industry. As with BPCTCA and BATEA, the values shown for the average BADCT effluent should not be directly applied until they are adjusted for variation in treatment plant performance as provided in Section XIII-Performance Factors in Treatment Plant Operations.

NOTICE: THESE ARE TENTATIVE RECOMMENDATIONS BASED UPON INFORMATION IN THIS REPORT AND ARE SUBJECT TO CHANGE BASED UPON COMMENTS RECEIVED AND FURTHER INTERNAL REVIEW BY EPA.

Table XIG-1

New Source Performance Standards
Photographic Processing Industry

Subcategory	Flow L/1,000 sq m (gal/1,000 sq ft)	Parameter	BPCTCA Long-Term Average Daily Effluent kg/1,000 sq m (lbs/1,000 sq ft)	BPCTCA Long-Term Average Daily Effluent mg/L	BATEA and BADCT Effluent Limitations: Long-Term Average Daily kg/1,000 sq m (lbs/1,000 sq ft)	Long-Term Average Daily mg/L	Average of Daily Values for 30 Consecutive Days shall not exceed kg/1,000 sq m (lbs/1,000 sq ft)	Average of Daily Values mg/L	Maximum Value for Any One Day kg/1,000 sq m (lbs/1,000 sq ft)	Maximum Value for Any One Day mg/L
Entire Industry	120,000 (2,960)	BOD_5	5.4 (1.11)	45	3.6 (0.74)	30	8.28 (1.70)	-	14.8 (3.03)	-
		COD	64.5 (13.2)	534	51.6 (10.6)	427	108 (22.3)	-	150 (30.7)	-
		TSS	-	20	-	10	-	26	-	50
		Silver Thiosulfate (as Ag)	0.015 (0.003)	0.1	0.015 (0.003)	0.1	0.038 (0.008)	-	0.073 (0.015)	-
		Ferrocyanide	-	1.35	-	1.35	-	3.5	-	6.8

NOTICE: THESE ARE TENTATIVE RECOMMENDATIONS BASED UPON INFORMATION IN THIS REPORT AND ARE SUBJECT TO CHANGE BASED UPON COMMENTS RECEIVED AND FURTHER INTERNAL REVIEW BY EPA.

DRAFT

H. Hospitals

The performance standards commensurate with the Best Available Technology Economically Achievable are also recommended as new source performance standards. These performance standards are presented in Table XIH-1.

It must be recognized that, in most cases, in-house modifications to existing hospitals are interchangeable with those which can be designed for new ones. Investigations should be conducted for all types of hospital wastewater sources to see if the wastewaters can be eliminated or reduced in quantities.

NOTICE: THESE ARE TENTATIVE RECOMMENDATIONS BASED UPON INFORMATION IN THIS REPORT AND ARE SUBJECT TO CHANGE BASED UPON COMMENTS RECEIVED AND FURTHER INTERNAL REVIEW BY EPA.

Table XIH-1

New Source Performance Standards
Hospitals

Subcategory	Flow L/1,000 occupied beds (gal/1,000 occupied beds)	BPCTCA Long-Term Average Daily Effluent Parameter	kg/1,000 occupied beds (lb/1,000 occupied beds)	mg/L	BATEA (1983) and BADCT Long-Term Average Daily Effluent Parameter	kg/1,000 occupied beds (lb/1,000 occupied beds)	mg/L
Hospitals	1,210,000 (319,000)	BOD_5	18.6 (41.1)	15	BOD_5	12.1 (26.6)	10
		TSS	-	20	TSS	-	10

Effluent Limitations					
Average of Daily Values for Thirty Consecutive Days Shall Not Exceed			Maximum for Any One Day		
Parameter	kg/1,000 occupied beds (lb/1,000 occupied beds)	mg/L	Parameter	kg/1,000 occupied beds (lb/1,000 occupied beds)	mg/L
BOD_5	16.9 (37.2)	-	BOD_5	19.4 (42.6)	-
TSS	-	14	TSS	-	15

NOTICE: THESE ARE TENTATIVE RECOMMENDATIONS BASED UPON INFORMATION IN THIS REPORT AND ARE SUBJECT TO CHANGE BASED UPON COMMENTS RECEIVED AND FURTHER INTERNAL REVIEW BY EPA.

DRAFT

SECTION XII

PRETREATMENT GUIDELINES

General

Pollutants from specific processes within the Miscellaneous Chemicals industry may interfere with, pass through, or otherwise be incompatible with publicly owned treatment works (municipal system) The following sections examine the general wastewater characteristics of the various industries and the pretreatment unit operations which may be applicable.

A. Pharmaceutical Industry

The majority of the manufacturing plants in the Pharmaceutical industry discharge their wastewaters into municipal sewage collection systems. The major sources of wastewaters in the Pharmaceutical industry are product washings, extraction and concentration procedures, and equipment washdown. Wastewaters generated by this industry have high concentrations of BOD_5, COD, TSS, and volatile organics. Wastewaters from some chemical synthesis and fermentation operations may contain metals (Fe, Cu, Ni, Ag, etc.) or cyanide and have anti-bacterial constituents, which may exert a toxic effect on biological waste treatment processes. For example, one class of pharmaceutical chemicals produced is bacteriostats, disinfectants, and compounds used for sterilizing public facilities, hospitals, etc. Certain formulations containing phenolics have been effective in this area. Since these products are, by nature, disinfectant, a biological treatment system could be deactivated if the raw effluent from such a manufacturing process was directly charged to the treatment system at too high a concentration. It may be necessary to equalize or chemically treat process effluents. This pretreated effluent, in certain circumstances, shoud then be acceptable for treatment in a conventional municipal system.

Considerations significant to the design of a pretreatment plant which will receive pharmaceutical plant effluent are the highly variable BOD_5 loadings, high chlorine demand, presence of surface-active agents, and the lack of required nutrients which may characterize the wastewater.

In view of the wastewater characteristics discussed above, it was concluded that certain production techniques could be grouped together on the basis of pollutants requiring pretreatment. Accordingly, the previously determined five technology subcategories for the pharmaceutical industry were divided into two pretreatment sub-groups as follows:

Sub-Group 1	Sub-Group 2
Subcategory A	Subcategory B
Subcategory C	Subcategory D
	Subcategory E

The principle difference in the general characteristics of the process wastewaters generated by the process techniques in these two Sub-Groups is that the wastewaters of Sub-Group 1 are more likely to include significant amounts of metals, cyanide, and spent solvents. The wastewaters generated by the two process subcategories in Sub-Group 1 are also generally much higher-strength wastes than those from the Sub-Group 2 process subcategories.

The types and amounts of metals and spent solvents in the wastewater from a pharmaceutical manufacturing process depend primarily on the manufacturing process and on the amounts and types of catalysts and solvents lost from the process. Most catalysts and solvents are expensive and therefore, are recovered for reuse. Only unrecoverable catalysts (metals), generally in small concentrations, and spent solvents appear in the wastewater.

Pharmaceutical industries generate wastewaters on an intermittent basis and equalization may be needed as pretreatment. When solvents are used for extraction, solvent removal can be accomplished by using gravity separation and skimming. Neutralization may be required to neutralize acidic or alkaline wastewaters generated from the production of specific pharmaceutical products. The metals present in some pharmaceutical wastes are in many cases so low in concentration that the removal of metals is not required from the standpoint of treatability characteristics. However the effluent limitations for metals and toxic pollutants may require additional pretreatment (chemical precipitation) for removal of these materials.

The pretreatment unit operations which may be necessary for various types of joint treatment facilities are shown in Table XIIA-1. The pretreatment unit operations which may be required for a Sub-Group 1 consist of equalization, neutralization, solvent separation, cyanide removal and spill protection for chemical storage areas. For Sub-Group 2 the general requirements are equalization and neutralization.

Table XIIA-1

Pretreatment Unit Operations

Pharmaceutical Industry

Pretreatment Sub-Group	Suspended Biological System	Fixed Biological System	Independent Physical Chemical System
1	Chemical Precipitation (Metals) + Solvent Separation + Equalization + Neutralization + Cyanide Oxidation + Spill Protection	Chemical Precipitation (Metals) + Solvent Separation + Equalization + Neutralization + Cyanide Oxidation + Spill Protection	Chemical Precipitation (Metals) + Solvent Separation + Equalization + Neutralization + Cyanide Oxidation + Spill Protection
2	Equalization + Neutralization	Equalization + Neutralization	Equalization + Neutralization

DRAFT

B. Gum and Wood Chemicals Industry

A review of the wastewater characteristics in the Gum and Wood Chemicals industry reveals that the process wastewaters contain high concentrations of soluble oxygen demanding materials, and are generally acidic and deficient in the nutrients phosphorous and nitrogen. Significant concentrations of zinc were noted during the survey in subcategories B and F. The zinc metal in subcategory F was attributed to losses of process catalyst. Contamination of gum distillation wastewaters with process wastewaters from subcategory F process is the suspected source of zinc in subcategory B wastewaters.

Oil and grease (from vegetable sources) was found in wastewaters from subcategories B, D and F. These oils are not hazardous and generally considered more biodegradable than oils from petroleum sources. However, separable oils should be removed from the process wastewaters by pretreatment prior to discharge to public sewers in order to minimize fouling problems in the sewer.

The scope of this study did not allow for a specific toxicity evaluation of individual product wastewaters. However, the completeness of the RWL analytical data did provide a wastewater profile which could be used to evaluate possible biological inhibition. Such evaluations must bring into account the dilution effect of domestic wastewaters when considering concentrations of possible inhibiting materials. Domestic wastewaters should also provide sufficient nitrogen and phosphorous to improve the treatability characteristics of the process wastes. Because this industry's wastewaters contain high levels of soluble oxygen demand in relatively small discharge flow, it will be necessary that the sewage treatment facility have sufficient oxygen transfer and solids handling and disposal capacity to adequately treat wastewaters from the Gum and Wood Chemicals industry. If such capacity cannot be made available at the public system, biological pretreatment facilities must be provided by industry to reduce the oxygen demand content of the process wastewaters to acceptable levels before discharge to the public sewers. In all cases, the industry should provide sufficient equalization and neutralization of wastewaters to prevent discharge loadings which could cause adverse impact on the performance of the municipal system. Table XIIB-1 shows possible unit operations which may be required for pretreatment of gum and wood chemicals wastewaters.

Table XIIB-1

Pretreatment Unit Operations

Gum and Wood Chemicals Industry

Subcategories	Suspended Growth Biological System	Fixed Growth Biological System	Independent Physical - Chemical System
B, D, F	Oil Separation + Equalization + Neutralization + Spill Protection + Chemical Precipitation[1]	Oil Separation + Equalization + Neutralization + Spill Protection + Chemical Precipitation[1]	Oil Separation + Equalization + Neutralization + Chemical Precipitation[1]
C, E	Equalization + Neutralization + Spill Protection	Equalization + Neutralization	Equalization + Neutralization

[1]Need for chemical precipitation depends on metal(s) content.

DRAFT

C. Pesticides and Agricultural Chemicals Industry

Pollutants from specific processes within the pesticide industry may pass through inadequately treated, interfere with, or otherwise be incompatible with a publicly-owned treatment works.

Strong wastes and toxic wastes should not be discharged to municipal treatment systems. Wherever possible, such wastes should be incinerated or disposed of in an approved manner by a certified contractor.

General process wastewaters will require neutralization to protect sewer collection lines from corrosion damage. Removal of separable organics should be performed by means of an API-type separator, and solids which could potentially block municipal sewer systems require removal. Equalization is recommended to avoid shock loads of flow, basic organic contaminants and toxic components. In addition to these general pretreatment requirements, the individual pesticide subcategories generally require specific pretreatment steps.

Halogenated Organic Pesticides

The wastewaters from this category require no specific pretreatment other than those mentioned above.

Organo-Phosphorus Pesticides

In addition to the general pretreatment guidelines outlined above, process wastewaters from facilities in this subcategory may require detoxification. Detoxification is best accomplished by extended heat treatment in alkaline conditions. Without detoxification, the wastes would have an inhibitory affect on biological treatment. In addition, alkaline precipitation of phosphate-type materials may be necessary in some cases.

Organo-Nitrogen Pesticides

The general discussions on pretreatment are applicable to the Organo-Nitrogen subcategory. In addition, some method of cyanide removal may be necessary to bring cyanide concentrations down to acceptable levels for municipal treatment.

Metallo-Organic Pesticides

Recommended pretreatment of process wastewaters includes the general guidelines, plus the removal of heavy metals by lime precipitation.

Formulators/Packagers

Since formulators and packagers can potentially process the products from all subcategories of active ingredients, pretreatment may consist of a combination of the preceding recommendations.

D. Adhesive and Sealants Industry

Pollutants from specific processes within the Adhesive and Sealants industry may interfere with, pass through, or otherwise be incompatible with a publicly-owned treatment works. Compatible pollutants are biochemical oxygen demand, suspended solids, pH, and fecal coliform bacteria, and any additional pollutants identified in the NPDES permit if the publicly-owned treatment works was designed to treat such pollutants and in fact does remove such pollutants to a substantial degree. The term "substantial degree" is not subject to precise definition, but is taken here to mean 80 percent or greater removal. Examples of the additional pollutants which may be considered compatible include:

1. Chemical oxygen demand
2. Total organic carbon
3. Phosphorus and phosphorus compounds
4. Nitrogen and nitrogen compounds
5. Fats, oils, and greases of animal or vegetable origin (except as prohibited where these materials would interfere with the operation of the publicly-owned treatment works).

In-plant measures to reduce the quantity and strength of industrial wastewater flows can be beneficial to joint treatment, and should be encouraged. Pretreatment for the removal of the compatible pollutants is not required by the Federal pretreatment standards. Pretreatment of wastewaters containing compatible pollutants may be necessary in the form of spill protection or flow equalization in order to ensure compliance with the pretreatment standards. To allow for the broad spectrum of industries, waste constituents, and treatment plants, pretreatment requirements should be based on an individual analysis of the permitted effluent limitations placed on a publicly-owned treatment works and on the potential for adverse effects on such works.

The characteristics of wastewaters from animal glue manufacturing plants vary according to the type of raw material being processed. The process wastewaters from animal glue plants contain BOD_5, COD, TOC, suspended and dissolved solids, alkalinity, organic-nitrogen, chromium, and oil and grease as major constituents. Since oil and grease occur in large quantities, they are recovered in the plant for sale as a non-edible by-product. Tankage may also be reclaimed as a by-product for the manufacture of fertilizer. The alkaline wastewater, which is high in lime solids, can be used to advantage for precipitation of the trivalent chromium. The trivalent chromium in the waste stream will be removed with the lime solids during clarification. In general, animal glue

wastewaters are amenable to joint treatment by conventional methods, if the industrial wastewater is adequately pretreated. The pretreatment unit operations which may be necessary for various types of joint treatment processes are shown in Table XIID-1. Screening to remove debris, equalization to provide uniformity of effluent, chemical precipitation to reduce the amount of chromium and neutralization to prevent excessively high pH values are generally necessary prior to discharge to a municipal collection system. The considerations in Table XIID-1 assume that fat and grease will be recovered as a by-product. Where this is not practiced, grease removal facilities may also be needed.

The characteristics of wastewaters from water- and solvent-based adhesive manufacturing plants vary according to the type of adhesives being produced. The wastewaters contain BOD_5, COD, TOC, suspended and dissolved solids, and usually alkalinity as major constituents. Wastewater discharges from plants producing certain types of adhesives may also contain organic-nitrogen, oil and grease, and phenol as major constituents. The diversity and complexity of the adhesive products produced, as well as the proprietary nature of many of the process chemicals, may require that the pretreatment be established on a case-by-case basis after thorough investigation. The pre-treatment unit operations which may be necessary for various types of joint treatment processes are shown in Table XIID-1.

The survey data collected during the sampling program were examined for specific pollutants which may inhibit biological treatment. Since most adhesive plants discharge directly to municipal treatment facilities, pretreatment requirements for these wastewater discharges are very important. The pollutants of major concern in the Adhesive and Sealants industry are chromium and phenol. Chromium has been shown to be toxic to activated sludge and trickling filter processes above certain concentrations. Trivalent chromium will precipitate from alkaline solutions, while hexavalent chromium will not precipitate. Therefore, the first step in treating wastewaters containing hexavalent chromium is to reduce it from the hexavalent to the trivalent form. Chromium reduction proceeds most rapidly in acid solution. When the chromium has been reduced, the pH of the wastewater is increased to precipitate not only the trivalent chromium, but other heavy metals as well.

Phenol is biologically degradable in an acclimated system. It has been reported that concentrations of mixed phenolics as high as 2,000 to 3,000 mg/L are degradable in a properly designed system. However, concentrations as low as 50 mg/L can inhibit biological treatment if the organisms are not properly acclimated.

In recent years, the activated sludge process has been adapted to industrial wastes similar in composition to that of effluents from the adhesive and sealants industry. Similarly, reductions greater than 90 percent of both BOD_5 and phenols from these types of wastewaters by the activated sludge process have been reported.

Table XIID-1

Pretreatment Unit Operations

Adhesives and Sealants Industry

Pretreatment Subcategory	Suspended Biological System	Fixed Biological System	Independent Physical Chemical System
A[1]	Coarse Solids Separation + Equalization + Chemical Precipitation (Metals) + Solids Separation + Neutralization	Coarse Solids Separation + Equalization + Chemical Precipitation (Metals) + Solids Separation + Neutralization	Coarse Solids Separation + Equalization
B, C	Equalization + Neutralization + Chemical Precipitation	Equalization + Neutralization + Chemical Precipitation	Equalization

[1] Pretreatment requirements assume fat and grease recovery as saleable by-product.

DRAFT

E. Explosives Industry

A review of the wastewater characteristics of the explosives industry indicates that the process wastewaters contain high concentrations of soluble oxygen-demanding materials, varied ranges of suspended solids, nitrates, sulfates, organic nitrogen and carbon, metals and trace quantities of explosives.

The scope of this study did not allow for a specific toxicity evaluation of explosive wastewaters. However, all but the last two parameters appear to be amenable to secondary treatment.

Metals such as lead and mercury have been shown to be discharged in quantities sufficient to disrupt biological activity. In one field investigation in subcategory C, lead discharges were found in concentrations of 200 mg/L. This makes physical/chemical precipitation mandatory as a pretreatment step.

Trace quantities of explosives may present a significant problem for a municipal sewage treatment system because of their toxicity and hazardous nature. However, a pretreatment system can be designed to ensure that toxicity and safety hazards are eliminated. The system would have to ensure that a slug of explosive material from an emergency discharge could never enter the municipal system. Such a system would consist of the following unit operations: equalization, chemical precipitation of metals, and neutralization.

F. Carbon Black Industry

Pollutants from specific processes within the Carbon Black industry will not interfere with, pass through inadequately treated, or otherwise be incompatible with a publicly-owned treatment works.

Subcategory A should have no process contact discharges. The only wastewater from this subcategory would be sanitary wastewater and utility blowdowns. All discharges of these types would be governed by local ordinances.

Subcategory B will have a single process contact wastewater, in addition to those non-contact sanitary and utility sources: i.e., the blowdown from the dehumidifier loop. The only significant contaminant in this source is TSS, which is compatible with a publicly-owned treatment works. Therefore, the discharges from subcategory B would also be governed by local ordinances.

G. Photographic Processing Industry

Approximately 5 percent of all major photoprocessing plants are classified as existing point sources and, therefore, are subject to the effluent limitations contained herein. The remaining 95 percent of the plants discharge their effluent to municipal treatment systems and are regulated by the pretreatment guidelines for those systems. These guidelines are designed to prevent plants from discharging industrial wastewaters which would upset the treatment processes used by the municipal system and industrial wastewaters which would pass through the works without adequate treatment (G-12).

Information presently available indicates that ferrocyanide should not exceed 1 mg/L expressed as free cyanide, since concentrations above this level have been shown to inhibit biological systems (G-5). Pretreatment of silver thiosulfate should be practiced to attain levels not to exceed 10 mg/L in the municipal treatment plant influent (G-3).

H. Hospitals

Pollutants from hospitals may interfere with, pass through, or otherwise be incompatible with a publicly-owned treatment works. Bio-chemical oxygen demand, suspended solids, pH, and fecal coliform bacteria are defined as compatible pollutants, along with any other pollutants which publicly-owned treatment works are designed to remove.

In-process measures to reduce the quantity and strength of incompatible pollutants in the wastewater flow can be beneficial to joint treatment, and should be encouraged. Pretreatment for the removal of the compatible pollutants is not required by the Federal pretreatment standards. Pretreatment requirements should be based on an individual analysis of the permitted effluent limitations placed on a publicly-owned treatment works and on the potential for adverse effects on such works.

The most practicable and economical pretreatment of incompatible pollutants in hospitals involves in-process modifications or changes in operating and maintenance procedures to completely eliminate the pollutants from the wastewater, rather than end-of-pipe treatment for removal of these pollutants. Economic advantages can be realized from in-process removals (for example, silver recovery), especially in large hospitals.

The following in-house controls have been recommended as methods of dealing with the pollution problems of hospitals:

1. All X-ray processing units should utilize the boron-free fixer which is now available from most manufacturers.

2. Wherever possible, stand-by control units should be installed on all X-ray processing units to decrease the usage of water by the processor. In the event that stand-by controls are not adaptable to the processing unit, it is recommended that the water flow be reduced to the minimum input possible without distracting from the final radiograph.

3. All barium should be encased in a plastic bag container and this container should be disposed of through solid waste procedures.

4. The discharge of silver from X-ray processing units should be controlled by utilization of a silver recovery system or by containing the spent developer and returning it to the manufacturer for silver recovery. If an in-house silver recovery system is utilized, it is recommended that recovery units for heavily-used X-ray processing equipment be placed in tandem.

5. Because the sources of potential mercury pollution are varied and complex, the administration should become familiar with the total mercury problem and establish staff responsibilities with appropriate duties.

Since most hospitals discharge directly to municipal treatment facilities, pretreatment requirements for their wastewater discharges are very important. If in-process modifications and operating procedures are not incorporated to reduce silver, mercury, barium, and boron from the waste stream, end-of-pipe pretreatment methods will have to be implemented to remove or reduce these incompatible pollutants from the hospital discharge before going to municipal treatment plants. The pretreatment unit operations which may be necessary for various types of joint treatment processes are shown in Table XII H-1.

TABLE XII H-1

Pretreatment Unit Operations
Hospitals

Suspended Biological System	Fixed Biological System	Independent Physical Chemical System
Chemical Precipitation (Metals) + Solids Separation	Chemical Precipitation (Metals) + Solids Separation	Chemical Precipitation (Metals) + Solids Separation

SECTION XIII

PERFORMANCE FACTORS FOR TREATMENT PLANT OPERATIONS

General

As referenced in the discussion of End-of-Pipe Treatment Systems in Section VII, the historic treatment plant data were analyzed on the basis of 50 percent occurrence value based upon long-term data, where possible.

In the past, effluent requirements have been issued by regulatory agencies without stated concern for uniform expression. Some agencies have issued regulations without definition of time interval or without stipulation of the type of the sample (grab or composite). This has caused difficulties in determining whether a particular plant was in violation. To overcome that situation, daily historic data (when available) from several biological treatment plants were reviewed, monthly averages were calculated, and then the data were analyzed statistically by each industrial category. The results of these analyses are discussed separately for each industrial category.

The significance of the data is that although a biological treatment plant is producing an effluent with a certain BOD_5 concentration 50 percent of the time or less, it will also produce an effluent with a greater BOD_5 concentration 50 percent of the time.

Variations in the performance of wastewater treatment plants are attributable to one or more of the following:

1. Severe ambient air temperature changes which are uncontrollable in conventional designs.

2. Variations in sampling techniques.

3. Variations in analytical methods.

4. Variations in one or more operational parameters, e.g., the organic removal rate by the biological mass, settling rate changes of biological sludge.

5. Controllable changes in the treatability characteristics of the process wastewaters even after adequate equalization.

These variations are purely a function of the wastewater treatment plant performance. They will still occur even if the wastewater treatment plant has provisions for equalization of fluctuation in the influent raw waste load which it receives.

A. Pharmaceutical Industry

Variability in historic effluent data from exemplary biological treatment plants treating pharmaceutical wastes were statistically analyzed. The results of these analyses are shown in Table XIIIA-1. Ratios of the 99 percent probability of occurrence to the 50 percent probability of occurrence, the 95 percent to the 50 percent value, and the 90 percent to the 50 percent value were computed for each plant. The average of the ratios are presented in Table XIIIA-2.

The 50 percent probability of occurrence values shown in Table XIIIA-1 are based upon long-term daily data. The 99 percent, 95 percent and 90 percent probability of occurrence values for the monthly average were based on "normalized data"; that is data values were assumed to follow a normal distribution. However, is should be emphasized that no data points were discarded. The maximum daily values were not normalized, because adequate long-term data were available to form definite distribution patterns. The occurrence of these abnormally high values, causing the skewing in the data distribution, is indicative of unusually poor treatment performance, probably attributable to some sort of process upset. Because of this phenomenon, selection of 99 percent probability of occurrence values as a basis for establishing daily variability is not recommended, since the 99/50 ratios of probability would be abnormally high. Use of 95 percent probability of occurrence values results in 95/50 ratios of probability more within a range typically observed in the past as being reasonable in the context of statistical analysis of treatment plant dates. Use of 95 percent probability of occurrence values for establishing monthly variability is also recommended since use of 95 percent probability suggests that a plant would be in violation less than one month/year.

The following effluent adjustment factors are proposed for the following parameters and time intervals:

Parameter	Performance Factor for Maximum Daily Effluent Value[1]	Performance Factor for Maximum Monthly Effluent Value[1]
BOD_5	4.1	2.3
COD	2.9	2.1
TSS	5.0	2.6

[1] 95/50 ratio of probability

Table XIIIA-1

Exemplary Biological
Treatment Plant Performance

Pharmaceutical Industry

Plant No	BOD5 Probability	BOD5 Max Day[1] mg/L	BOD5 Max. Month Ave. mg/L	BOD5 Max Day / P_{50} Day	BOD5 Max Month / P_{50} Day	COD Probability	COD Max Day[1] mg/L	COD Max. Month Ave. mg/L	COD Max Day / P_{50} Day	COD Max Month / P_{50} Day	TOC Probability	TOC Max Day[1] mg/L	TOC Max. Month Ave mg/L	TOC Max Day / P_{50} Day	TOC Max Month / P_{50} Day	TSS Probability	TSS Max Day[1] mg/L	TSS Max. Month Ave. mg/L	TSS Max Day / P_{50} Day	TSS Max Month / P_{50} Day	Subcategory
11	P_{50}=5' mg/L					P_{50}=382 mg/L										P_{50}=53 mg/L					C
	P_{99}	402	144	7.9	2.8	P_{99}	894	670	2.5	1.8						P_{99}	320	132	6 0	2 5	
	P_{95}	194	124	3.8	2.4	P_{95}	690	588	1.8	1.5						P_{95}	188	114	3.5	2.2	
	P_{90}	162	110	3.2	2 2	P_{90}	584	545	1.5	1.4						P_{90}	143	104	2.7	2.0	
14	P_{50}=1 4 mg/L					P_{50}=16 8 mg/L										P_{50}=3.8 mg/L					E
	P_{99}	19 4	4.2	13.9	3 0	P_{99}	52 6	23 0	3.1	1.4						P_{99}	37.9	11.9	10 0	3.1	
	P_{95}	3.7	3.6	2 6	2 6	P_{95}	32.8	21.5	2.0	1.3						P_{95}	20.0	10.0	5.3	2 6	
	P_{90}	3.0	3 2	2.1	1.5	P_{90}	28 0	20 5	1.7	1.2						P_{90}	12.0	9.0	3 2	2.4	
15	P_{50}=8 mg/L					P_{50}=30 mg/L										P_{50}=11 mg/L					D & E
	P_{99}	29	24	2 6	3 0	P_{99}	162	120	5 4	4.0						P_{99}	42	39	3.8	3.5	
	P_{95}	23	20	2.9	2 5	P_{95}	126	98	4.2	3.3						P_{95}	36	32	3.3	2.9	
	P_{90}	20	18	2.5	2.2	P_{90}	108	88	3.6	2 9						P_{90}	29	28	2.6	2.5	
9	P_{50}=100 mg/L										P_{50}=292 mg/L					P_{50}=147 mg/L					A & C
	P_{99}	1115	222	11.1	2.2						P_{99}	1573	518	5.3	1.8	P_{99}	2620	620	17.8	4.2	
	P_{95}	630	190	6.3	1.9						P_{95}	862	465	3.0	1.6	P_{95}	1557	520	10.6	3.5	
	P_{90}	431	175	4.3	1.8						P_{90}	580	435	2.0	1.5	P_{90}	802	460	5.4	3.1	
04	P_{50}=310 mg/L																				A & C
	P_{99}	1667	830	5.4	2.7																
	P_{95}	812	698	2.6	2 2																
	P_{90}	711	625	2.3	2.0																
08	P_{50}=3 5 mg/L					P_{50}=32.6 mg/L										P_{50}=21.5 mg/L					B
	P_{99}	104	9	29.7	2.6	P_{99}	202	88	6.2	2.7						P_{99}	56.0	39	2.6	1.8	
	P_{95}	24	8	6.9	2 3	P_{95}	124	75	3.7	2.3						P_{95}	46	34	2.1	1.6	
	P_{90}	13	7	3.7	2.0	P_{90}	68	68	2.1	2.1						P_{90}	40	31.5	1.9	1.5	

[1] P_{50} = Values are based upon daily data on long term basis

Normalized Data

DRAFT

Table XIIIA-2

Pharmaceutical Industry
Average Ratios of Probabilities of Occurrence

Ratio Of Probability	Daily	Monthly
	BOD_5	
99/50	10.9	3.0
95/50	4.1	2.3
90/50	3.1	2.0
	COD	
99/50	4.3	2.5
95/50	2.9	2.1
90/50	2.2	1.9
	TOC	
99/50	5.3	1.8
95/50	3.0	1.6
90/50	2.0	1.5
	TSS	
99/50	8.0	3.0
95/50	5.0	2.6
90/50	3.2	2.3

The following is an illustration of how the EPA Regional Offices would employ the monthly effluent adjustment factors:

	BOD_5 kg/kkg product	COD kg/kkg product	TSS kg/kkg product
Average BPCTCA Effluent Limitations	8	15	1
Daily Effluent Performance Factor	4.1	2.9	5.0
Monthly Effluent Performance Factor	2.3	2.1	2.6
Acceptable Maximum for Any One Day	32.8	43.5	5.0
Average of Daily Values for 30 Consecutive Days Shall Not Exceed	18.4	31.5	2.6

There is not enough performance data available from physical/chemical treatment systems at this time to determine variability for BATEA and BADCT effluent limitations; consequently, the ratios established for BPCTCA have been used. As performance data become available, their ratios should be reevaluated.

The performance factors in this section were applied to the average daily effluent limitations to develop the effluent limitations guidelines presented in Sections II, IX, X, and XI.

B. Gum and Wood Chemicals Industry

Biological Wastewater Treatment

Only two wastewater treatment plants which employ biological treatment were surveyed during the Gum and Wood Chemicals study. Neither of these plants had sufficient historic data to perform the statistical analysis to determine performance factors for treatment plant operation.

The performance factors developed for the Pharmaceutical industry are not considered applicable for the Gum and Wood industry because of significant differences in production processes and wastewater variability. The Petroleum Refining industry more closely resembles the Gum and Wood Chemicals industry in that both employ continuous or batch continuous distillation operations. Organic load variability on end-of-pipe treatment facilities for these two industries are, therefore anticipated to be closely related.

The performance factors for the Petroleum Refining industry have been published by EPA[1] as follows:

Level of Treatment	Effluent Parameter	Performance Factor for Maximum Monthly Effluent Value	Performance Factor for Maximum Daily Effluent Value
BPCTCA	BOD_5	1.7	3.2
	COD	1.6	3.1
	TSS	1.7	2.9
BATEA	BOD_5	1.7	2.1
	COD	1.6	2.0
	TSS	1.7	2.0
BADCT	BOD_5	1.7	2.1
	COD	1.6	2.0
	TSS	1.7	2.0

The proper performance factors were applied to long-term average daily BPCTCA effluent limitations in order to generate effluent limitations guidelines based on the maximum average of daily values for thirty consecutive days and the maximum for any one day as presented in Table IXB-1.

[1] "Development Document for Effluent Limitations Guidelines and New Source Performance Standards for Petroleum Refining Point Source Category, Issued April, 1974, EPA - 440174-014-A, EPA, Washington, D.C. 20460.

The applicability of this established treatment plant performance variability data for the Petroleum Refining industry to the Gum and Wood Chemicals industry will be substantiated as additional plant performance data become available.

Activated Carbon Wastewater Treatment

During the survey of the Gum and Wood Chemicals industry, no plant employed activated carbon after biological treatment. Consequently, no long-term performance data were available for this industry. As a result, the performance factors developed for BATEA and BADCT for the Petroleum Refining industry were applied to BATEA and BADCT effluent limitations guidelines. The effluent limitations guidelines based on maximum average of daily values for thirty consecutive days and maximum for any one day in Tables XB-1 and XIB-1 were similarly calculated from the long-term average daily BATEA and New Source (BADCT) effluent limitations guidelines.

C. Pesticides and Agricultural Chemicals Industry

Insufficient historical data were available to perform a statistical analysis to determine variability factors for annual treatment plant performance.

Characteristic of the manufacturing facilities in the Pesticides and Agricultural Chemicals industry are batch type operations, a very diverse product mix, and seasonal production variation. As these process variations are similar to those in the Pharmaceutical industry, the organic load variability on end-of-pipe treatment plants for the Pesticides and Agricultural Chemicals industry and the Pharmaceutical industry are, therefore, anticipated to be closely related. For the same reason, the performance of end-of-pipe treatment plants in these two industries should be similar. Consequently, the performance factors of treatment plant operations as developed for the Pharmaceutical industry from the long-term performance of biological treatment plant operations have been applied to this industry also. These performance factors are as follows:

Parameter	Performance Factor for Maximum Monthly Effluent Value	Performance Factor for Maximum Daily Effluent Value
BOD_5	2.3	4.1
COD	2.1	2.9
TSS	2.6	5.0

As additional treatment plant performance data in this industry become available, such data should be used to reevaluate the performance factors used in this document.

Since there is not enough performance data available from physical/chemical treatment systems reported at this time to determine performance factors for BATEA and BADCT effluent limitations guidelines, the factors establishe for BPCTCA biological treatment systems have been used for BATEA and BADCT effluent limitations guidelines. As performance data become available, the performance factors used in this document should be reevaluated.

The performance factors presented in this section were applied to the long-term average daily effluent limitations to develop the effluent limitation guidelines for the maximum average daily values for thirty consecutive days and the maximum for any one day, as presented in Sections II, IX, X, and XI of this document.

D. Adhesive and Sealants Industry

Biological Wastewater Treatment

No wastewater treatment plants which employed biological treatment were surveyed during the adhesive and sealants study. Therefore, there were no historic data available as a basis for statistical analysis to determine variability factors for annual treatment plant performance in this category.

Characteristic of the manufacturing facilities in the Adhesive and Sealants industry are batch type operations, a very diverse product mix, and seasonal production variation. As these process variations are similar to those in the Pharmaceutical industry, the organic load variability on end-of-pipe treatment plants for the Adhesive and Sealants industry and the Pharmaceutical industry are, therefore, anticipated to be closely related. For the same reason, the performance of end-of-pipe treatment plants in these two industries should be similar. Consequently, the performance factors of treatment plant operations as developed for the Pharmaceutical industry from the long-term performance of biological treatment plant operations have been applied to this industry. These performance factors are as follows:

Parameter	Performance Factor for Maximum Monthly Effluent Value	Performance Factor for Maximum Daily Effluent Value
BOD_5	2.3	4.1
COD	2.1	2.9
TSS	2.6	5.0

As additional treatment plant performance data in this industry become available, such data should be used to reevaluate the performance factors used in this document.

Since there is not enough performance data available from physical/chemical treatment systems reported at this time to determine performance factors for BATEA and BADCT effluent limitations, the factors established for BPCTCA biological treatment systems have been used for BATEA and BADCT effluent limitations guidelines. As performance data become available, the performance factors used in this document should be reevaluated.

The performance factors presented in this section were applied to the long-term average daily effluent limitations to develop the effluent limitation guidelines for the maximum average of daily values for thirty consecutive days and the maximum for any one day, as presented in Sections II, IX, X, and XI of this document.

E. Explosives Industry

Variability in historic effluent data from an exemplary biological treatment plant treating propellant wastes was statistically analyzed. The results of this analysis are shown below. Ratios of the 95 percent probability of occurrence to the 50 percent probability of occurrence, were computed for this plant, with the average of the daily and monthly BOD and COD ratios as follows:

Ratio of Probability	Daily	Monthly
95/50	3.8	2.4

For lack of data, variability in suspended solids could not be developed by historical means. Because of the similarity of their treatment systems, TSS variability for the Explosives industry was assumed to be similar to the Pharmaceuticals industry. The following performance factors are to be multiplied by long-term average effluent guidelines to ascertain effluent limitations. These factors represent a ratio of the 95 percent probability of occurrence to 50 percent probability of occurrence for daily and monthly values of TSS.

Ratio of Probability	Daily	Monthly
95/50	5.0	2.6

These performance factors were applied to the long-term average daily effluent limitations to develop the effluent limitations guidelines presented in Sections II, IX, X, and XI.

F. Carbon Black Industry

No historic data were obtained during the study of the Carbon Black industry on which to base a statistical analysis to determine variability factors for annual treatment plant performance on segregated process streams in this category. Therefore, no performance factors are recommended at this time since the character of the suspended solids from this industry cannot be related to any other industrial category. They should be developed as soon as data become available in the industry.

G. Photographic Processing Industry

It is apparent from the performance data collected on the large-scale activated sludge unit during the field study that BOD and COD reductions were variable during the first two years of performance. Following the installation of the sand filters in the second year, BOD reduction in percent brought about by the combined installation varied from 78 percent to 91 percent; during a different period, COD reduction varied from 45 percent to 70 percent. These data were reported as ten-week averages and were not available in a more usable form to determine variability.

The Photographic Processing industry is characterized by batch type operations, a very diverse product mix, and seasonal production variation. As these process variations are similar to those in the Pharmaceutical industry, the organic load variability on end-of-pipe treatment plants for the Photographic Processing industry and the Pharmaceutical industry are, therefore, anticipated to be closely related. For the same reason, the performance of end-of-pipe treatment plants in these two industries should be similar. Consequently, the performance factors of treatment plant operations as developed for the Pharmaceutical industry from the long-term performance of biological treatment plant operations have been applied to this industry also. These performance factors are as follows:

Parameter	Performance Factor for Maximum Monthly Effluent Value	Performance Factor for Maximum Daily Effluent Value
BOD_5	2.3	4.1
COD	2.1	2.9
TSS	2.6	5.0

As additional treatment plant performance data in this industry become available, such data should be used to reevaluate the performance factors used in this document.

Sufficient historical data were not available to perform a statistical analysis to determine variability factors for silver and ferrocyanide in treatment plant effluent. The draft development document for effluent limitations guidelines for the Metal Finishing industry (G-14) establishes a variability factor of 2.0 between the maximum for any single day average and the thirty-day average. However, it does not establish any variability relationship between annual daily average values and the thirty-day average. Since silver and ferrocyanide in treatment plant effluent are more likely to be in the form of TSS, the

same performance factors used for TSS were applied to silver and ferrocyanide to develop the maximum average of daily values for any period of thirty consecutive days and maximum value for any one day shown in Tables IIG-1 and IIG-2.

Since there is not enough performance data available from physical/chemical treatment systems at this time to determine performance factors for BATEA and BADCT effluent limitations, the factors established for BPCTCA biological treatment systems have been used for BATEA and BADCT effluent limitations. As performance data become available, the performance factors used in this document should be reevaluated.

The performance factors presented in this section were applied to the long-term average daily effluent limitations to develop the effluent limitation guidelines for the maximum average of daily values for thirty consecutive days and the maximum for any one day, as presented in Sections II, IX, X, and XI of this document.

H. Hospitals

Historic effluent data from activated sludge plants treating hospital wastes were statistically analyzed to determine variability. The results of the analyses are shown in Table XIIIH-1. Ratios of the 99 percent probability of occurence to the 50 percent probability, the 95 percent to the 50 percent value, and the 90 percent to the 50 percent value were computed for each hospital. The average ratios are as follows:

Ratio of Probability	BOD_5 Daily	BOD_5 Monthly	TSS Daily	TSS Monthly
99/50	2.2	1.8	2.3	1.4
95/50	1.6	1.4	1.5	1.4
90/50	1.5	1.2	1.4	1.3

The 50 percent probability of occurrence values and the maximum daily values shown in Table XIIIH-1 are based on analysis of weekly grab sample data over a long period. The 99 percent, 95 percent and 90 percent probability of occurrence values for the monthly average were based on "normalized data"; that is, data values were assumed to follow a normal distribution. However, it should be emphasized that no data points were discarded. The maximum daily values were not normalized, as adequate long-term data were available to form definite distribution patterns. The occurrence of these abnormally high values, causing the skewing in the data distribution, is indicative of unusually poor treatment performance, probably caused by some sort of process upset. Because of this phenomenon, selection of 99 percent probability of occurrence values as a basis for establishing daily variability is not recommended, since the 99/50 ratios of probability would be abnormally high. Use of 95 percent probability of occurrence values results in 95/50 rations of probability more within a range considered reasonable in statistical analysis of treatment plant data. Use of 95 percent probability of occurrence values for establishing monthly variability is also recommended because use of 95 percent probability suggests that a plant could be in violation less than one month/year.

The following performance factors are proposed for the following parameters and time intervals:

Parameter	Performance Factors[1] for Maximum Daily Effluent	Performance Factors[1] for Maximum Daily Effluent
BOD_5	1.6	1.4
TSS	1.5	1.4

[1] 95/50 ratio of probability

Table XIIIH-1

Effluent Variation of
Activated Sludge Treatment Plant Effluents

Hospitals

Hospital No.	BOD5					TSS				
	Probability	Max. Day[1] mg/L	Max. Month Ave. mg/L	Max Day P_{50} Day	Max Month P_{50} Day	Probability	Max. Day[1] mg/L	Max. Month Ave. mg/L	Max Day P_{50} Day	Max Month P_{50} Day
93	P_{50}=14 mg/L[1]					P_{50}=15 mg/L[1]				
	P_{99}	42	29*	3.0	2.1	P_{99}	32	23*	2.1	1.5
	P_{95}	30	25*	2.1	1.8	P_{95}	23	21*	1.5	1.4
	P_{90}	25	20*	1.8	1.4	P_{90}	20	19*	1.3	1.3
102	P_{50}=16 mg/L[1]					P_{50}=10 mg/L[1]				
	P_{99}	24	22*	1.5	1.4	P_{99}	25	14*	2.5	1.4
	P_{95}	20	18*	1.2	1.1	P_{95}	15	13*	1.5	1.3
	P_{90}	20	16*	1.2	1.0	P_{90}	15	12*	1.5	1.2

[1] P_{50} values are based on analysis of weekly grab sample data over a long term basis.

* = Normalized Data

DRAFT

Although these performance factors are somewhat low in comparison to values found in other industries, they appear responsible in view of the fact that waste discharges from hospitals are relatively continuous and activated sludge systems treating such wastes are rarely subjected to shock loadings; hence, their performance tends to be more consistent.

The following is an illustration of how the EPA Regional Offices would employ the performance factors:

	BOD_5 lbs./1000 occupied beds	TSS lbs./1000 occupied beds
Average BPCTCA Effluent Limitations	41	22
Daily Effluent Adjusted Factor	1.6	1.5
Monthly Effluent Adjustment Factor	1.4	1.4
Acceptable Maximum for Any One Day	65.6	33.0
Acceptable Average of Daily Values for Any 30 Consecutive Days Shall Not Exceed	57.4	30.8

There is not enough performance data available from dual-media filtration treatment systems at this time to determine variability for BATEA and BADCT effluent limitations; consequently, the ratios established for BPCTCA have been used. As performance data become available, these ratios should be reevaluated.

The adjustment factors in this section were applied to the long term average daily effluent limitations to develop the effluent limitations guidelines as presented in Sections II, IX, X, and XI.

SECTION XIV

ACKNOWLEDGEMENTS

Roy F. Weston, Inc. wishes to express appreciation to the following organizations and individuals for the valuable assistance which they provided throughout the study:

The Pharmaceutical Manufacturers Association and personnel of selected plants in the Pharmaceutical industry who provided valuable assistance in the collection of data relating to process RWL and treatment plant performance.

The Pulp Chemicals Association for providing valuable information on the tall oil industry, and the personnel of selected plants of the Gum and Wood Chemicals industry for their help in the collection of data relating to process RWL and treatment plant performance.

Acknowledgement is made of the cooperation of personnel in many plants in the Pesticides and Agricultural Chemicals industry who provided valuable assistance in the collection of data relating to process raw waste loads and treatment plant performance.

The Adhesives and Sealants Council for assisting in the development of logical effluent limitations and standards by providing an industry breakdown which made possible the subcategorization of the industry, and also for their aid in obtaining volunteer plants to participate in field investigations. Acknowledgement is also made of the personnel in selected plants of the Adhesives and Sealants industry for their cooperation in the collection of data relating to process RWL.

The personnel of selected plants of the Explosives industry for their assistance in obtaining pertinent data necessary in the writing of this document.

The personnel of the Carbon Black industry who aided in the collection of data related to manufacturing processes, RWL and treatment plant performance.

The Photographic Processing industry for not only providing valuable information used in the development of the effluent guidelines of this document, but for the cooperation of personnel in selected plants who aided in the collection of data relating to process RWL and in-plant pollution abatement techniques.

The American Hospital Association and the Veteran's Administration for their assistance in the selection of representative hospitals, and the personnel of surveyed hospitals who provided data relating to RWL and treatment plant performance.

Roy F. Weston, Inc. also wishes to acknowledge the assistance of the personnel at the Environmental Protection Agency's Regional Centers, who helped identify those plants in the miscellaneous chemicals industry known to be achieving effective waste treatment, and whose tireless efforts provided much of the research necessary for the treatment technology review.

Special acknowledgement is also made of the assistance and direction of Mr. Joseph Vitalis, Project Officer, and others in the Effluent Guidelines Division: Messrs. Allen Cywin, Ernst Hall, Walter Hunt, John Nardella, John Ciancia, Don Wilson, Raymond Loehr, Martin Halper, Bruno Maier, George Jett, David Becker and others, for their helpful suggestions and comments.

WESTON would like to extend its appreciation for the time and effort the following governmental organizations displayed:

- EPA-Effluent Guidelines Branch, Washington, D.C.
- EPA-Region I-Industrial Waste Treatment Research Laboratory
- American Defense Preparedness Association - Ad Hoc Committee
- U.S. Army Environmental Hygiene Agency
- Manufacturing Technology Directorate, U.S. Army Picatinny Arsenal
- Headquarters U.S. Army Armaments Command
- U.S. Army Material Command
- Headquarters Department of the Army

In addition WESTON would like to extend its gratitude to the following individuals for the significant input into the development of this document:

- Gerry Eskulund
- Tom Wash (HAAP) U.S. Armament Commander
- Lt. Col. Ronald Snyder, HAAP
- Don Emig
- Irving Forsten
- Sheldon Meyers - Director, Office of Federal Activity - EPA
- Charles Sell
- H. R. Smith - Acting Deputy Assistant Secretary of Defense (Environmental Quality)

- John Pace
- Col. William Gardiner - Headquarters Department of the Army
- Lt. Col. Victor J. Gongola - Counselor, HAAP
- John R. Evans - Holsten Defense Corporation
- Col. Marshal Steinberg - U.S. AEHA
- Lt. Col. Waldimir Gulevich - U.S. AEHA
- Lt. Col. Roy Reuter - U.S. Army Medical R&D Command
- Marvin Robin - U.S. AEHA

This study was conducted and the report prepared for the Environmental Protection Agency under the direction of Project Director, James H. Dougherty, P.E., and Technical Project Manager, Jitendra R. Ghia, P.E. The following individual members of the staff of Roy F. Weston, Inc. made significant contributions to the overall effort:

Roy F. Weston, Chairman of the Board

Paul H. Woodruff, President

James E. Germain, Vice President

Pharmaceutical Industry and Hospitals

D. R. Junkins
D. W. Grogan

Gum & Wood Chemicals Industry

C. M. Mangan
J. G. McGovern
R. P. Stevens

Pesticides & Agricultural Chemicals Industry

D. C. Day
J. J. Davies
J. R. Piskura

Adhesive and Sealants Industry

E. L. Stover

Explosives Industry

J. A. Defilippi
K. J. Phillips

Carbon Black Industry

P. A. Haderer

Cost Estimates

T. E. Taylor

Laboratory Services

P. J. Marks
K. K. Wahl

Technical Editing

J. L. Simons
A. M. Tocci
F. T. Russo

Internal Consultants

D. A. Baker
Y. H. Lin
D. S. Smallwood
R. R. Wright
M. Ramanathan

SECTION XV

BIBLIOGRAPHY

A. Pharmaceutical Industry

A-1. Anderson, D. R. et al, "Study of Pharmaceutical Manufacturing Wastewater Characteristics and Aerated Treatment System," Proceedings 25th Purdue Industrial Waste Conference, May 1970, 26.

A-2. "Antibiotics" Industrial Wastes - Their Disposal and Treatment, Reinhold Publishing Corporation, New York, 1953.

A-3. Breaz, E., "Drug Firm Cuts Sludge Handling Costs," Water and Wastes Engineering, January 1972, Appendix 22 - 23.

A-4. Brown, W. E., "Antibiotics," Encyclopedia of Chemical Technology, Kirk-Othmer, Vol. 2, 533-540.

A-5. "Cooling Tower," Power, Special Report, March 1973, 51-523.

A-6. "Economic Priorities Report," In Whose Hands, Vol. 4, Council on Economic Priorities, New York.

A-7. Herion, R.W., Jr, "Two Treatment Installations for Pharmaceutical Wastes," Proceedings 18th Purdue Industrial Waste Conference, 1963.

A-8. Holmberg, J. D. and Kinney, D. L., Drift Technology of Cooling Towers, Marley Company, Mission, Kansas, 1973.

A-9. Lederman, P. B., Skovronek, H., and desRosiers, P. E., "Pollution Abatement in the Pharmaceutical Industry," Pharmaceutical Symposium of the American Institute of Chemical Engineers' National Meeting, Washington, D.C., 1974.

A-10. Nemerow, N.L., Liquid Waste of Industry - Theories, Practices and Treatment, Addison-Wesley Publishing Company, Reading, Massachusetts, 1971.

A-11. Mayes, J. H., "Characterization of Wastewaters from the Ethical Pharmaceutical Industry," EPA 67012-74-057, National Environmental Research Center, Cincinnati, Ohio, July 1974.

A-12. Mohanrao, G. J., et al., "Waste Treatment at a Synthetic Drug Factory in India," JWPCF, Vol. 42, No. 8, Part 1, August 1970, 1530-1543.

A-13. Shor, L. A. and Magee, R. J., "Veterinary Drugs," Encyclopedia of Chemical Technology, Kirk-Othmer, Vol. 21, 241-254.

A-14. Shreve, R. N., Chemical Process Industries, Third Edition, McGraw-Hill, 1967.

A-15. Strong, L. E., "Blood Fractionation," Encyclopedia of Chemical Technology, Kirk-Othmer, Vol. 3, 576-602.

A-16. Taber, C. W., Tabers' Cyclopedic Medical Dictionary, Tenth Edition, F. A. Davis Company, Philadelphia, Pa., 1965.

A-17. Windheuser, J. J., Perrin-John, "Pharmaceuticals," Encyclopedia of Chemical Technology, Kirk-Othmer, Vol. 15, 112-132.

A-18. Patterson, J.W. and Minear, R.A., "Wastewater Treatment Technology" 2nd Edition Jan. 1973 for State of Illinois, Institute for Environmental Quality.

A-19. "Pollution Abatement Practices in the AAP", by I. Forster, Environmental Science & Technology, summer of 1973.

A-20. "A Primer on Waste Water Treatment", Environmental Protection Agency, Water Quality Office, U. S. Government Printing Office 1971, 0-419-407.

A-21. "Industrial Process Design for Pollution Control", Volume 4, Proceedings of Workshop organized and held under the auspices of the AIChE Environmental Division, October 27-29, 1971, Charleston, West Virginia.

A-22. "Making Hard-to-Treat Chemical Wastes Evaporate", Chemical Week, May 9, 1973.

A-23. Cost of Clean Water, Industrial Waste Profile No. 3, GWQA, U. S. Department of the Interior (November 1967).

A-24. "Development of Operator Training Materials", Prepared by Environmental Science Services Corp., Stanford, Conn., under the direction of W. W. Eckenfelder, Jr. for FWQA (August 1968).

A-25. Quirk, T. P., "Application of Computerized Analysis to Comparative Costs of Sludge Dewatering by Vacuum Filtration and Centrifuge," Proc., 23rd Ind. Waste Conf., Purdue University 1968, pp. 691-709.

A-26. "Compilation Industrial and Municipal Injection Wells in U.S.A.", EPA-520-9-74-020, Vol. 1 and Vol. 2, Industrial Waste, January - February 1975.

A-27. Davis, K. E., Funk, R. J., "Deep Well Disposal of Industrial Waste", Industrial Waste, January - February 1975.

A-28. Ajit Sadana, "Multi-Effect Evaporation and Pyrolyzation of Industrial Wastewater Residues and Energy Recovery", Enviro-engineering, Inc., Somerville, New Jersey, Paper Presented at National Conference on Management and Disposal of Residues from the Treatment of Industrial Wastewaters, Washington, D.C., February 3-5, 1975.

A-29. Engineering-News Record. Published Weekly by McGraw Hill, Inc., Highstown, New Jersey.

A-30. Barnard, J. L., "Treatment Cost Relationships for Industrial Waste Treatment", Ph.D. Dissertation, Vanderbilt University, Tennessee (1971).

A-31. Swanson, C. L., "Unit Process Operating and Maintenance Costs for Conventional Waste Treatment Plants," FWQA, Cincinnati, Ohio (June 1968).

A-32. "Estimating Staff and Cost Factors for Small Wastewater Treatment Plants Less than 1 MGD". Part 1 and Part II. "Staffing Guidelines for Conventional Municipal Wastewater Treatment Plants Less than 1 MGD". By Department of Industrial Engineering and Engineering Research Institute, Iowa State University. EPA Grant No. 5P2-WP-195-0452, June 1973.

A-33. EPA 625/1-74-006 "Process Design Manual for Sludge Treatment and Disposal", U. S. EPA - Technology Transfer, October 1974.

A-34. "Process Design Manual for Carbon Adsorption", U. S. EPA Technology Transfer, October 1973.

A-35. EPA, "Development Document for Effluent Limitations Guidelines and Standards of Performance - Organic Chemicals Industry", June 1973.

A-36. EPA, "Draft Development Document for Effluent Limitations Guidelines and Standards of Performance - Steam Supply and Noncontact Cooling Water Industries", October 1974.

A-37. "Water Quality Criteria, 1972", National Academy of Sciences and National Academy of Engineering for Environmental Protection Agency, Washington, D.C., 1972 (U.S. Government Printing Office, Stock No. 5501-00520).

A-38. "Process Design Manual for Upgrading Existing Wastewater Treatment Plants", EPA, 1974.

B. Gum and Wood Chemicals Industry

B-1. Kent, J. A., ed. Riegel's Industrial Chemistry, Reinhold Publishing Corporation, New York, 1962.

B-2. Publicity Committee (Zachary, L. G., et al.) "Tall Oil and its Uses," Tall Oil Products Division, Pulp Chemicals Association, F. W. Dodge Company, New York, 1965.

B-3. Shreve, R. N., Chemical Process Industries, Third Edition McGraw-Hill Book Company, New York, 1967.

B-4. Encyclopedia of Chemical Technology, 2nd Edition, Kirk-Othmer, Interscience Publishers Division, John Wiley and Sons, Inc.

C. Pesticides and Agricultural Chemicals Industry

C-1. "Pesticide Handbook - Entoma", Entomological Society of America, 24th Edition, 1974.

C-2. "The Pollution Potential in Pesticide Manufacturing": Pesticide Study Series - 5, Technical Studies Report (TS-00-72-04), Environmental Protection Agency, June 1972.

C-3. "Pesticides '72", Chemical Week, Part 1, June 21, 1972.

C-4. "Pollution Control Technology for Pesticide Formulators and Packagers", Grant No R-801577, Office of Research and Monitoring, Environmental Protection Agency, 12 June 1974.

C-5. "Development Document for Proposed Effluent Limitations Guidelines and New Source Performance Standards for the Major Organic Products", U. S. Environmental Protection Agency, EPA 440/1-73/009, December 1973.

C-6. "Pollution Control at the Source", Chemical Engineering, August 6, 1973.

C-7. "Currents - Technology", Environmental Science and Technology, Volume 8, No. 10, October 1974.

C-8. "Development Document for Effluent Limitations Guidelines and Standards of Performance", draft, Organic Chemicals Industry Phase ii, Environmental Protection Agency, under contract, number 68-01-1509, February, 1974.

C-9. "The Pesticide Manufacturing Industry - Current Waste Treatment and Disposal Practices", Water Pollution Control Research Series (12020 FYE 01/72), U. S. Environmental Protection Agency, January 1972.

C-10. Anon., "Activated - Sludge Process Solves Waste Problem", Chemical Engineering, 68 (2), 1961.

C-11. "Biological Treatment of Chlorophenolic Wastes", Water Pollution Control Research Series (12130 EGK 06/71), U. S. Environmental Protection Agency, June 1971.

C-12. "Process Design Manual for Upgrading Existing Wastewater Treatment Plants", EPA 1974.

C-13. EPA internal Memorandum, "Variability in BOD Concentration from Biological Treatment Plants", To: Lilliam Regelson, From: Charles Cook, March 1974.

C-14. "Production, Distribution, Use and Environmental Impact Potential of Selected Pesticides", Midwest Research Institute Report, Final Report, 25 February 1973, 15 March 1974, Contract No. EQC-311, Council on Environmental Quality, 1974.

C-15. "Pesticides in the Aquatic Environment", Environmental Protection Agency, April 1972.

C-16. "Metabolism of Pesticides", U.S. Department of Interior, July 1969.

C-17. "Water Quality Criteria, 1972", #5501-00520 National Academy of Science.

C-18. Sittig, M., "Pesticides Production Processes", Noyes Development Corporation, Park Ridge, New Jersey, 1967.

C-19. "Pesticides and Pesticide Containers", Federal Register, October 15, 1974, Volume 39, Number 200, Part 1.

C-20. "Chlorinated Insecticides", Volumes I and II, Technology and Application, G.T. Brooks, The University of Sussex, Brighton, Sussex, England, CRC Press, Inc., Cleveland, Ohio, 44128 (1974).

C-21. "Guidelines For The Disposal of Small Quantities of Unused Pesticides" - Part A and Part B. Contract 68-01-0098, Project 15090 HGR, by Midwest Research Institute, Kansas City, Mo. for EPA., Cincinnati, Ohio, Published by Midwest Research Institute, Kansas City, Mo. 64110.

C-22. "Interaction of Heavy Metals and Biological Sewage Treatment Process", Environmental Health Series, Water Supply and Pollution Control, U.S. Department of Health, Education, and Welfare, May 1965.

U. S. Patent No.	Date Patented	Title of Patent
2,699,451	1-11-55	Process for the Production of Organic Amino Diol Derivatives
2,694,089	11-9-54	Process for the Recovery of dl-Threo-1-p-Nitrophenyl-2-Amino-1,3-Propanediol
2,692,897	10-26-54	Process for the Production of Acylamido Diol Compounds
2,692,896	10-26-54	Process for the Production of N-Acylamido Diols
2,687,434	8-24-54	Production of 1-(Nitrophenyl)-Z Acylamidopropane-1-3-Diols
2,686,802	8-17-54	Dichloracetimino Thioethers and Acid Addition Salts Thereof
2,681,364	6-15-54	Process for the Production of 1-p-Nitrophenyl-Z-Acylamidopropane-1,3-Diols
2,662,906	12-15-53	Chloramphenicol Esters and Method for Obtaining Same
2,568,571	9-18-51	Haloacetylamidophenyl-Halo-Acetamido propandiol
2,562,107	6-24-51	Derivatives of Organic Amino Alcohols and Methods for Obtaining the Same
2,546,762	3-27-51	Acylamino Acetophenones and Preparation Thereof
2,538,792	1-23-51	Preparation of Phenylserinol
2,538,766	1-23-51	Triacyl-Phenylpropane-aminodiols
2,538,765	1-23-51	Diacyl Phenylpropane-aminodiols

U. S. Patent No.	Date Patented	Title of Patent
2,538,764	1-23-51	Acylamido-Phenylpropanediols
2,515,241	7-18-50	Nitrophenyl Acylamino Acyloxy Ketones
2,515,239	7-18-50	a-Acylamido-p Hydroxy Nitro Substituted Propiophenones
2,514,376	7-11-50	Triacyl Nitrophenylpropane-aminodiols and Preparation Thereof
2,513,346	7-4-50	Process for Obtaining Organic Amino Diols
2,483,885	10-4-49	Nitrophenyl Acyl Amido Alkane Diols
2,483,884	10-4-49	Method for Making Nitrophenyl Acylamido Alkane Diols

D. Adhesive and Sealants Industry

D-1. Adhesives Red Book, Palmerton Publishing Company, Inc., New York, 1974-1975.

D-2. Skeist, I., Handbook of Adhesives, Reinhold Publishing Corporation, 1966.

D-3. "Effluent Limitations Guidelines and Standards of Performance for the Organic Chemicals Industry," Phase 1, Development Document, RFW.

D-4. Shreve, R. N., Chemical Process Industries, Third Edition, McGraw-Hill, Inc., New York, 1956.

D-5. Clarke, J. S., "New Rules Prevent Tank Failures, " Hydrocarbon Processing, 50 (5), 1971, 92-94.

D-6. Crocker, B. B., "Preventing Hazardous Pollution During Plant Catastrophes," 4, 1970.

D-7. McDermott, G. N., "Industrial Spill Control and Pollution Incident Prevention," J. Water Pollution Control Federation, 43 (8), 1971, 1629.

D-8. "Effluent Limitations Guidelines and New Source Performance Standards for the Timber Products Industry Veneer/Plywood and Hardboard Wood Preserving," Development Document, Environmental Science and Engineering, Inc.

D-9. Bodien, D.G., Plywood Plant Glue Wastes Disposal, Federal Water Pollution Control Administration, Pacific Northwest Water Laboratory, U.S. Department of the Interior, 1969.

D-10. Haskell, H. H., "Handling Phenolic Resin Adhesive Wash Water in Southern Pine Plywood Plants," Forest Products Journal, Vol. 21, No. 9, September, 1971.

D-11. "Proposed Effluent Limitations Guidelines and New Source Performance Standards for the Synthetic Materials Manufacturing Point Source Category", Development Document, Report No. EPA 440/1-73/010, Effluent Guidelines Division, Office of Air and Water Programs, U.S. EPA, Washington, D.C., September, 1973.

D-12. Ullrich, A. H., and Smith, M. W., "The Biosorption Process of Sewage and Waste Treatment," Sewage and Industrial Wastes, 23, 1951, 1248-1253.

E. Explosives Industry

E-1. "Industrial Waste Treatment Facilities, Holston Army Ammunition Plant, Volume II," The Army Corps of Engineers, Mobile District, Clark Dietz and Assoc., January 1974.

E-2. "Annotated Bibliography Development Of Methods To Minimize Environmental Pollution, MM&T Project 54114," Facilities and Protective Technology Div., Manufacturing Technology Directorate, Picatinny Arsenal, Dover, N.J., January 1974.

E-3. Harris, R., "Abatement Of High Nitrate Concentrations At Munitions Plants: A State Of The Art Review," Picatinny Arsenal, Dover, N.J., August 1973.

E-4. "Pollution Status Report," U.S. Army, Radford Army Ammunition Plant, Radford, Va., August 1974.

E-5. Maybury, D. H. and Evans, J. L., "Propellant Plant Pollution Abatement Improvement Of Water Utilization," December 1973.

E-6. "Pollution Abatement Engineering Program For Munition Plant Modernization" 3,4 & 5 Briefings for Senior Scientist Steering Group," Picatinny Arsenal, Dover, N.J., February 1973, 1974, 1975.

E-7. Eskelund, G. R., et al., "A Laboratory Study Of Carbon Adsorption For Elimination Of Nitrobody Waste From Army Ammunition Plants," Picatinny Arsenal, Dover, N.J., January 1973.

E-8. Information Package, Radford AAP, 1974.

E-9. Information Package, HAAP, 1974.

E-10. Reed, S., "Wastewater Management By Disposal On The Land," Special Report 171, U.S. Army Corps of Engineers, Cold Regions Research and Engineering Laboratory, May 1972.

E-11. Patterson, J. W. and Minear, R. A., "Pollution Control In The Commercial Explosives Industry," April 1974. (EPA Publication)

E-12. Smith, L. L. and Dickenson, R. L., "Biological And Engineering Investigation To Develop Optimum Control Measures To Prevent Water Pollution," Final Engineering Report - Propellant Plant Pollution Abatement, Radford Army Ammunition Plant, April 1972.

E-13. "Concept Engineering Report - TNT Waste Control Program," Catalytic, Inc. for U.S. Naval Ammunition Depot, Crane, Indiana, October 1972.

E-14. Patterson, J. W., et al, "Wastewater Treatment Technology," Illinois Institute of Environmental Quality, August 1971.

E-15. Neal, L. G., "Army Munitions Plants Modernization Program Pollution Abatement Review" Final Report No. 96020 007, Picatinny Arsenal, Dover, N.J., August 1973.

E-16. "Carbon Column System Removal Efficiency Study, Iowa Army Ammunitions Plant, Burlington, Iowa," Environmental Hygiene Agency No. 24-033-73/74, U.S. Army, Aberdeen Proving Grounds, Md., June 1973.

E-17. "Pollution Abatement Engineering Program For Munition Plant Modernization," U.S. Army, Picatinny Arsenal, Dover, N.J., February 1974.

E-18. "Propellant Plant Pollution Abatement Engineering Investigation To Develop Optimum Control Measures To Prevent Water Pollution," U.S. Army Final Engineering Report On Production Engineering Project PE-249 (Phase II), Radford Army Ammunition Plant, May 1974.

E-19. "EPA Guidelines Group Meeting At Radford Army Ammunition Plant Water Pollution Abatement And Control," U.S. EPA, November 1974.

E-20. "U.S. Environmental Protection Agency Report On Waste Disposal Practices Radford Army Ammunition Plant, Radford, Virginia," U.S. EPA, Middle Atlantic Region - III, Philadelphia, Pa. July 1972.

E-21. Klausmeier, J. L., "The Effect Of TNT On Soil Microorganisms," U.S. Navy, 1973.

E-22. "Pollution Abatement Engineering Program for Munition Plant Modernization," 5th Briefing for Senior Scientist Steering Group, Picatinny Arsenal, Dover, N.J., February 1975.

E-23. "A Characterization Study of the Wastewater Effluents of the Military Explosives & Propellants Production Industry", Vol. I, II, III, (unpublished) prepared by Adhoc Committee of the American Defense Preparedness Association, February 1975.

E-24. U.S. EPA "Process Design Manuel for Carbon Adsorption", Technology Transfer, October 1973.

E-25. Rosenblatt, David H., "Investigations Related to Prevention and Control of Water Pollution in the U. S. TNT Industry," in Pollution, Engineering and Scientific Solutions, E. S. Barrekette, Plenum Press, N. Y., 1973.

E-26. Schulte, G. R., Hoehn, R. C., and Randall, C. W., "The Treatability of a Minitions-Manufacturing Waste with Activated Carbon," Proc, 28th Purdue Industrial Waste Conference, Purdue University, W. Lafayette, Indiana, May 24, 1973.

E-27. Kozlorowski, B. and Kucharski, J., Industrial Waste Diaposal, Pergamon Press, New York, 1972.

E-28. Edwards, G., and Ingram, W. T., "The Removal of Color from TNT Wastes," Journal Sanitary Engineering, American Society of Civil Engineers, 81, Separate No. 645,1955.

E-29. Rudolfs, W., Industrial Wastes Their Disposal and Treatment Reinhold Publication Company, New York, 1953.

E-30. Osman, J. L., and Klausmeir, R. E., "The Microbial Degradation of Explosives," Developments in Industrial Microbiology, 14:247-252, 1973.

E-31. Nay, M. W., Jr., Randall, C. W. and King, P. H., "Biological Treatability of Trinitrotoluene Manufacturing Wastewater," Journal Water Pollution Control Federation, 46:3485-497, 1974.

E-32. Ruchhoft, C. C., LeBosquet, M., Jr., and Meckler, W. G., "TNT Wastes from Shell-Loading Plants," Industrial Engineering Chemical 37:937, 1945.

E-33. Solin, V. and Burianek, K., "The Removal of TNT from Industrial Waste," Journal on Water Pollution Control Federation. 32:-:110, 1960.

E-34. U. S. Army Corps of Engineers, "Wastewater Management by Disposal on the Land." Special Report #171, May 1972.

E-35. Transportation and Environmental Operations, "Army Munitions Plants Modernization Program Pollution Abatement Review", August 1973.

E-36. Radford AAP, "Production Engineering Project PE249 (Phase II)" Radford, Virginia, May 1974.

E-37. Hoffsommer, J. C., "Biodegradability of TNT", Naval Ordinance Laboratory, Maryland, November 1973.

E-38. U. S. AEHA, "Carbon Column System Removal Efficiency Study", Iowa AAP, May, June 1973.

E-39. EPA, "Group Meeting at Radford AAP - Water Pollution Abatement and Control", November 18, 1974.

E-40. Hercules, Inc., "Production Engineering Project PE249 (Phase I)", Radford AAP, April 1972.

E-41. Catalytic, Inc., "Concept Engineering Report TNT Waste Control Program", Crane Naval Ammunition Depot, October 1972.

E-42. Construction Engineering Research Laboratory, "Technical Evaluation Study, Industrial Wastewater Treatment Area A, Holston AAP.", Kingsport, Tennessee, December 1973.

E-43. Holston Defence Corporation, "Material Balance and Waste Characterization on Explosives Finishing and Analytical Laboratories", Kingsport, Tennessee.

E-44. Holston Defence Corporation, "Materials Balance and Waste Characterization - Explosive Manufacturing", Kingsport, Tennessee, September 1972.

E-45. EPA, "Report on Holston AAP", Kingsport, Tennessee, March 1973.

E-46. EPA, "Report on Waste Source Investigations", Kingsport, Tennessee, March 1973.

E-47. Hercules, Inc., "Production Engineering Project PE210 Alleviation of Pollution in Water From Solvent Recovery and Water Dry Operations", RAAP, August 1972.

E-48. Hercules, Inc., "Production Engineering Project PE275 (Phase I) Propellant Plant Pollution Abatement Engineering Study to Establish Disposal Methods for Waste Acid Neutralization Sludge", RAAP, March 1973.

E-49. Hercules, Inc., "Production Engineering Project PE290 (Phase II)", Propellant Plant Pollution Abatement Improvement of Water Utilization at RAAP, November 1973.

E-50. EPA, "Report on Waste Disposal Practices at Radford AAP", Virginia, May 1973.

E-51. Report No. 24-034-72: Water Quality Engineering Special Study, Twin Cities AAP, October 1972.

E-52. Report No. 24-033-72: Water Quality Engineering Special Study, Volunteer AAP, August 1972.

E-53. Report No. 24-024-72: Water Quality Engineering Special Study, Joliet AAP, June 1972.

E-54. Report No. 24-014-72: Water Quality Engineering Special Study, Longhorn AAP, April 1972.

E-55. Report No. 24-006-72: Water Quality Engineering Special Study, Louisiana AAP, December 1971.

E-56. Report No. 24-001-72: Water Quality Engineering Special Study, Radford AAP, October 1971.

E-57. Report No. 24-030-71: Water Quality Engineering Special Study, Lake City AAP, August 1971.

E-58. Report No. 24-021-71: Water Quality Engineering Special Study, Holston AAP, 19 March - 28 June 1971.

E-59. Report No. 24-009-71: Water Quality Engineering Special Study, Scranton AAP, December 1970.

E-60. Report No. 24-005-71: Water Quality Engineering Special Study, Louisiana AAP, 1 May - 15 August 1970.

E-61. Report No. 24-002-69: Special Study of Industrial Waste at Sacramento, California, October 1968.

E-62. Report No. 24-024-73: Water Quality Monitoring & Installation Laboratory Consultation at Riverbank AAP, December 1972.

E-63. Report No. 24-010-70: Report of General Sanitary Survey at Sunflower AAP, September 1969.

E-64. Report No. 24-023-73: Water Quality Monitoring & Installation Laboratory Consultation Visit at Twin Cities AAP, October 1972.

E-65. Report No. 24-019-71: Follow-up Study of Storm Survey Pollution at Burlington AAP, November 1970.

E-66. Report No. 24-010-71: Sanitary Engineering Survey at Cornhusker AAP, December 1970.

E-67. Report No. 24-029-70/71: Sanitary Engineering Survey at Lake City AAP, October 1970.

E-68. Report No. 24-026-70: Sanitary Engineering Survey at Holston AAP, January 1970.

E-69. Report No. 24-003-71: Sanitary Engineering Survey at Volunteer AAP, August 1970.

E-70. Report No. 24-010-73: Water Quality Biological Study at Holston AAP, August 1972.

E-71. Report No. 24-001-71: Sanitary Engineering Survey at Joliet AAP, July 1970.

E-72. Report No. 24-002-71: Sanitary Engineering Survey at Indiana AAP, July 1970.

E-73. Report No. 24-003-72: Water Quality Engineering Survey at Iowa AAP, September 1971.

E-74. Report No. 24-009-73: Water Quality Biological Study at Iowa AAP, July 1972.

E-75. Report No. 24-004-72: Water Quality Engineering Special Study at Badger AAP, April - October 1971.

E-76. Report No. 24-038-70/71: Sanitary Engineering Survey & Industrial Waste Special Study at Badger AAP, May 1970.

E-77. Report No. 24-038-73/74: Water Quality Monitoring & Consultation at Badger AAP, April 1973.

E-78. Report No. 24-007-71: Sanitary Engineering Consultation Visit at Louisiana AAP, October 1970.

E-79. Report No. 24-024-70: Sanitary Engineering Survey at Louisiana AAP, January 1970.

E-80. Report No. 24-029-72/73: Water Quality Engineering Survey at Lone Star AAP, May 1972.

E-81. Report No. 24-004-73: Water Quality Engineering Survey at Kansas AAP, August - September 1972.

E-82. Report No. 24-009-70: Report of General Sanitary Engineering Survey at Kansas AAP, September 1969.

E-83. Report No. 24-032-72/73: Water Quality Engineering Special Study at Joliet AAP, June 1972.

E-84. Report No. 24-030-72/73: Water Quality Monitoring & Installation Laboratory Consultation at Joliet AAP, June 1972.

E-85. Report No. 24-027-72: Water Quality Engineering Special Study at Longhorn AAP, December - January 1972.

E-86. Report No. 24-011-73/74: Water Quality Engineering Survey at Milan AAP, March 1973.

E-87. Report No. 24-039-73/74: Water Quality Monitoring & Installation Laboratory Consultation at Lavenna AAP, April 1973.

E-88. Report No. 24-005-70: Report of General Sanitary Engineering Survey at Ravenna AAP, April 1973.

E-89. Report No. 24-025-73: Water Quality Monitoring & Installation Laboratory Consultation at Louisiana AAP, January 1973.

E-90. Report No. 24-026-72: Water Quality Engineering Special Study at Louisiana AAP, March - April 1972.

E-91. Report No. 24-030-73: Water Quality & Installation Laboratory Consultation at Milan AAP, March 1973.

E-92. Report No. 24-041-73/74: Water Quality Monitoring & Installation Laboratory Consultation at Longhorn AAP, June 1973.

E-93. Report No. 24-023-70: General Sanitary Engineering Survey at Longhorn AAP, January 1970.

E-94. Report No. 24-025-70: Sanitary Egnineering Survey at Milan AAP, January 1970.

E-95. Technical Report 4554, Project No. 54114: A Laboratory Study of Carbon Adsorption for Elimination of Nitrobody Waste at Dover AAP, January 1973.

E-96. Technical Report 4552, Project No. 54114: Pilot Aeration & Neutralization at Joliet AAP, April 1973.

E-97. EPA: Report on Waste Source Investigations, Kingsport, Tennessee. National Field Investigation Center - Denver, Cincinnati, Region IV Atlanta, Georgia, April 1973.

E-98. Report No. 24-005-73: Water Quality Monitoring & Installation Laboratory Consultation at Holston AAP, August 1973.

E-99. Report No. 24-006-73: Water Quality Monitoring & Installation Laboratory Consultation Visit at Volunteer AAP, August - September 1972.

E-100. Report No. 24-031-72/73: Water Quality Engineering Special Study at Volunteer AAP, May 1972.

E-101. Report No. 24-002-70: Water Quality Engineering Special Study, Burlington AAP, 18-19 August 1969.

E-102. Report No. 24-011-69: Water Quality Engineering Special Study, Radford AAP, 13-21 June 1969.

E-103. Report No. 24-009-68: Special Study of Industrial Wastes at Radford AAP, May 1968.

E-104. Report No. 24-017-67: Report of Industrial Waste Survey, Sunflower AAP, 16-27 October 1967.

E-105. Report No. 24-013-73: Water Quality Biological Study at Newport AAP, September 1972.

E-106. Report No. 24-004-71: Sanitary Engineering Study at Newport AAP, August 1970.

E-107. Report No. 24-007-69: Water Pollution Evaluation Visit at Newport AAP, February 1969.

E-108. Report No. 24-027-73: Water Quality Monitoring & Installation Laboratory Consultation at Newport AAP, January 1973.

E-109. Report No. 24-007-73: Water Quality Monitoring & Installation Laboratory Consultation at Radford AAP, September 1972.

F. Carbon Black Industry

F-1. Encyclopedia of Chemical Technology, Kirk Othmer, Interscience Publishers Division, John Wiley and Sons, Inc., Second Edition.

F-2. Minerals Yearbook, U.S. Department of Interior, 1973.

G. Photographic Processing Industry

G-1. "Information Form For Requesting Assistance In Pollution Abatement," Photographic Technology Division, Eastman Kodak Company, Rochester, N.Y.

G-2. "Wolfman Report on the Photographic Industry in the United States," Modern Photography Magazine, 1973-74.

G-3. Bard, C. E., et al, "Silver in Photoprocessing Effluents," Eastman Kodak Company, Rochester, N. Y.

G-4. Dagon, T.J., "Biological Treatment Of Photoprocessing Effluents," JWPCF, Vol. 15, No. 10, October 1973.

G-5. "Pretreatment of Pollutants Introduced Into Publicly Owned Treatment Works," EPA, October 1973.

G-6. Fulweiler, S. B., "The Nature of Photographic Processing," Presented at Photoprocessing and the Environment Seminar, June 1974.

G-7. "American National Standard on Photographic Processing Effluents, Drafts, ANSI, November 1974.

G-8. Terhaar, C. J., et al, "Toxicity of Photographic Processing Chemicals to Fish," Photographic Science and Engineering, Vol. 16, No. 5, September - October 1972.

G-9. Cooley, A. C., "Reuse and Recovery of Processing Chemicals," Presented at Photoprocessing and the Environment Seminar, June 1974.

G-10. Ayers, G. L., "How Processor Waste Loads Can Be Minimized," Presented at Photoprocessing and the Environment Seminar, June 1974.

G-11. Dagon, T. J., "Specific Applications Of Photographic Processing Effluent Treatment," Presented at Photoprocessing and the Environment Seminar, June 1974.

G-12. Dufficy, T. J., "The Federal Water Pollution Control Act of 1972. Its Effect on Photographic Processing Operations," Photoprocessing and the Environment Seminar, June 1974.

G-13. Cook, C., "Variability in BOD_5 Concentration From Biological Treatment Plants."

G-14. "Effluent Limitations Guidelines and Standards of Performance - Metal Finishing Industry," Draft Development Document, January 1974.

H. Hospitals

H-1. Guide to the Health Care Field, American Hospital Association, 1974.

H-2. "A Survey of a Sewage Treatment Plant at a Tuberculosis Hospital," U.S. Army Medical Research and Development Command, June 1959.

H-3. "Control of Mercury Pollution," American Hospital Association, July, 1971.

H-4. "Survey of Water Charge Practices," American Hospital Association, 1952.

SECTION XVI

GLOSSARY

A. Pharmaceutical Industry

Activated Sludge Process. In this process, wastewater is stabilized biologically in a reactor under aerobic (in the presence of oxygen) conditions.

Aerobic. Ability to live, grow, or take place only where free oxygen is present.

Alkylation. The addition of an aliphatic group to another molecule. The media in which this reaction is accomplished can be vapor or liquid phase, as well as aqueous or non-aqueous.

Ampules. A small glass container that can be sealed and its contents sterilized. Ampules are used to hold hypodermic solutions.

Anaerobic. Ability to live, grow, or take place where there is no air or free oxygen present.

Antagonistic Effect. The simultaneous action of separate agents mutually opposing each other.

Antibiotic. A substance produced by a living organism which has power to inhibit the multiplication of, or to destroy, other organisms, especially bacteria.

Aqueous Solution. One containing water or watery in nature.

Bacteria. Unicellular, plant-like microorganisms, lacking chlorophyll.

BADCT Effluent Limitations. Limitations for new sources which are based on the application of the Best Available Demonstrated Control Technology.

Batch Process. A process which has an intermittent flow of raw materials into the process and a resultant intermittent flow of product from the process. This is the most common type process employed by the Pharmaceutical industry to manufacture medicinal chemicals.

BATEA Effluent Limitations. Limitations for point sources, other than publicly owned treatment works, which are based on the application of the Best Available Technology Economically Achievable. These limitations must be achieved by July 1, 1983.

Biological Treatment System. A system that uses microorganisms to remove organic pollutant material from a wastewater.

Blowdown. Water intentionally discharged from a cooling or heating system to maintain the dissolved solids concentration of the circulating water below a specific critical level.

BOD_5. Biochemical Oxygen Demand (BOD) is the amount of oxygen required by bacteria while stabilizing decomposable organic matter under aerobic conditions. The BOD test has been developed on the basis of a 5-day incubation period (i.e. BOD_5).

BPCTCA Effluent Limitations. Limitations for point sources, other than publicly owned treatment works, which are based on the application of the Best Practicable Control Technology Currently Available. These limitations must be achieved by July 1, 1977.

Capsules. A gelatinous shell used to contain medicinal chemicals and as a dosage form for administering medicine.

Catalyst. A substance which changes the rate of a chemical reaction but undergoes no permanent chemical change itself.

Cellulose. The fibrous constituent of trees which is the principal raw material of paper and paperboard.

Centrate. The liquid fraction that is separated from the solids fraction of a slurry through centrifugation.

Centrifugation. The process of separating heavier materials from lighter ones through the employment of centrifugal force.

Chemical Synthesis. The processes of chemically combining two or more constituent substances into a single substance.

Clarification. The process of removing undissolved materials from a liquid specifically either by settling or filtration.

Contact Process Wastewaters. These are process-generated wastewaters which have come in direct or indirect contact with the reactants used in the process. These include such streams as contact cooling water, filtrates, centrates, washwaters, etc.

Continuous Process. A process which has a constant flow of raw materials into the process and a resultant constant flow of product from the process.

Crystallization. The formation of solid particles within a homogeneous phase. Formation of crystals separates a solute from a solution and generally leaves impurities behind in the mother liquor. Crystallization from solution is important in the pharmaceutical industry because of the variety of materials that are marketed in crystalline form.

Culture. A mass of microorganisms growing in a media.

Cyanide. Total cyanide as determined by the test procedure specified in 40 CFR Part 136 (Federal Register, Vol. 38, no. 199, October 16, 1973).

Cyanide A. Cyanides amendable to chlorination as described in "1972 Annual Book of ASTM Standards" 1972: Standard D 2036-72, Method B, p. 553.

Denitrification. Bacterial mediated reduction of nitrate to nitrite. Other bacteria may act on the nitrite reducing it to ammonia and finally N_2 gas. This reduction of nitrate occurs under anaerobic conditions. The nitrate replaces oxygen as an election acceptor during the metabolism of carbon compounds under anaerobic conditions.

Derivative. A substance extracted from another body or substance.

Disinfectant. A chemical agent which kills bacteria.

Distillation. The separation, by vaporization, of a liquid mixture of miscible and volatile substances into individual components, or, in some cases, into groups of components.

Esterification. This generally involves the combination of an alcohol and an organic acid to produce an ester and water. The reaction is carried out in the liquid phase, with aqueous sulfuric acid as the catalyst. The use of sulfuric acid has in the past caused this type of reaction to be called sulfation.

Fermentation. Oxidative decomposition of complex substances through the action of enzymes or ferments produced by microorganisms.

Filtrate. The liquid fraction that is separated from the solids fraction of a slurry through filtration.

Fungus. A vegetable cellular organism that subsists on organic material, such as bacteria.

Gland. A device utilizing a soft wear-resistant material used to minimize leakage between a rotating shaft and the stationary portion of a vessel such as a pump.

Gland Water Water used to lubricate a gland. Sometimes called "packing water."

In-Plant Measures. Technology applied within the manufacturing process to reduce or eliminate pollutants in the raw waste water. Sometimes called "internal measures" or "internal controls".

Medicament. Medicine or remedy.

Mycelium. The mass of filaments which constitutes the vegetative body of fungi.

Neutralization. The treatment of wastewaters with either caustic or acid to adjust the wastewater pH to approximately 7.0.

Nitrification. Bacterial mediated oxidation of ammonia to nitrite. Nitrite can be further oxidized to nitrate. These reactions are brought about by only a few specialized bacterial species. *Nitrosomonias* sp. and *Nitrococcus* sp. oxidize ammonia to nitrite which is oxidized to nitrate by *Nitrobacter* sp.

Nitrifiers. Bacteria which causes the oxidation of ammonia to nitrites and nitrates.

Nitrogen Fixation. Biological nitrogen fixation is carried on by a select group of bacteria which take up atmospheric nitrogen (N_2) and convert it to amine groups or for amino acid synthesis.

Noncontact Process Wastewaters. Wastewaters generated by a manufacturing process which have not come in direct contact with the reactants used in the process. These include such streams as noncontact cooling water, cooling tower blowdown, boiler blowdown, etc.

NPDES. National Pollution Discharge Elimination System. A federal program requiring industry to obtain permits to discharge plant effluents to the nation's wastecourses.

Parenteral. Injection of substances into the body through any route other than via the digestive tract.

pH. A symbol for the degree of acidity or alkalinity of a solution; expressed as the logarithm of the reciprocal of the hydrogen ion concentration.

Physical/Chemical Treatment System. A system that utilizes physical (i.e., sedimentation, filtration, centrifugation, etc.) and/or chemical means (i.e., coagulation, oxidation, precipitation, etc.) to treat wastewaters.

Plasma. The liquid part of the lymph and of the blood.

PMA. Pharmaceutical Manufacturers Association. The PMA represents 110 pharmaceutical manufacturing firms, who account for approximately 95 percent of the prescription products sold in the United States.

Raw Waste Load (RWL). The quantity (kg) of pollutant being discharged in a plant's wastewater, measured in terms of some common denominator (i.e., kkg of production or m^2 of floor area).

Sanitary Landfill. A sanitary landfill is a land disposal site employing an engineered method of disposing of solid wastes on land in a manner that minimizes environmental hazards by spreading the wastes in thin layers, compacting the solid wastes to the smallest practical volume, and applying cover material at the end of each operating day.

Saprophytic Organism. One that lives on dead or decaying organic matter.

Seed. To introduce microorganisms into a culture medium.

Serum. A fluid which is extracted from an annual rendered immune against a pathogenic organism and injected into a patient with the disease resulting from the same organism.

Solvent. A liquid which reacts with a material, bringing it into solution. The Pharmaceutical industry uses solvents extensively in product extraction processes.

Solvent Extraction. A mixture of two components is treated by a solvent that preferentially dissolves one or more of the components in the mixture. The solvent in the extract leaving the extractor is usually recovered and reused.

Standard Raw Waste Load (SRWL). The raw waste load which characterizes a specific subcategory. This is generally computed by averaging the plant raw waste loads within a subcategory.

Steroid. Term applied to any one of a large group of substances chemically related to various alcohols found in plants and animals.

Synergistic Effect. The simultaneous action of separate agents which, together, have greater total effect than the sum of their individual effects.

Tablet. A small, disc-like mass of medicinal powder used as a dosage form for administering medicine.

Thermal Oxidation. The wet combustion of organic materials through the application of heat in the presence of oxygen.

Toxoid. Toxin treated so as to destroy its toxicity, but still capable of inducing formation of antibodies.

Trypsinized. To be hydrolyzed by trypsin, an enzyme in pancreatic juice.

Vaccine. A killed or modified live virus or bacteria prepared in suspension for innoculation to prevent or treat certain infectious diseases.

Virus. The specific living diseased agent by which infectious disease is transmitted.

B. Gum and Wood Chemicals Industry

Carbonization. A process whereby a carbon residue is produced via the destructive distillation of wood.

Cyclone. A conical shaped vessel for separating either entrained solids or liquid materials from the carrying air or vapor. The vessel has a tangential entry nozzle at or near the largest diameter, with an overhead exit for air or vapor and a lower exit for the more dense materials.

Destructive Distillation. Decomposition of wood (or a hydrocarbon) by heat in a closed container and the collection of the volatile substances produced.

Entrainment Separator. A device to remove liquid and/or solids from a gas stream. Energy source is usually derived from pressure drop to create centrifugal force.

Essential Oils. An oil composed mainly of terpene hydrocarbons (turpentine), which are obtained by steam distillation of wood chips, bark or leaves of select trees.

Ester Gum. A resin made from rosin or rosin acids and a polyhydric alcohol, such as glycerin or pentaerythritol.

Exudate. Exuded matter.

Fractionation (or Fractional Distillation). The separation of constituents, or group of constituents, of a liquid mixture of miscible and volatile substances by vaporization and recondensing at specific boiling point ranges.

Gum. The crystallized pine oleoresin or "scrape" collected from scarified "faces" of trees being worked for turpentine, exudates from living long leaf and slash pine trees.

Hardwood (or Deciduous Woods). Trees that lose their leaves annually. Morphologically and chemically distinct from the conifers and commonly referred to as hardwoods, despite the fact that certain species such as basswood and poplar have woods that are relatively soft. Fibers are substantially shorter that those of coniferous wood. Normally, deciduous woods are not a source of turpentine.

Kraft (or Sulfate) Process. The digestion of wood chips with a solution of sodium hydroxide, sodium sulfide, and sodium carbonate to product paper pulp. This process delignifies the wood chip and allows

separation of the cellulose fibers from a caustic solution of lignin degradation products (sugars, hemicellulose, resin, and fatty acids) and unsaponifiables.

Naval Stores. Chemically reactive oils, resins, tars, and pitches derived from the oleoresin contained in, exuded by, or extracted from trees chiefly of the pine species (Genus Pinus), or from the wood of such trees.

Noncondensibles. Vapors or gases that remain in the gaseous state at the temperature and pressure specified. These normally would be considered the final vented gases under operating conditions.

Oleoresin. Pine gum, the non-aqueous secretion of rosin acids dissolved in a terpene hydrocarbon oil which is produced or exuded from the intercellular resin ducts of a living tree or accumulated, together with oxidation products, in the dead wood of weathered limbs and stumps.

Pine Tar Oil. The oil obtained by condensing the vapors from the retorts in which resinous pine wood is destructively distilled (carbonized).

Pitch. A dark viscous substance obtained as a residue in the distillation of the volatile oils from retort pine oil or crude tall oil.

Pitch, Brewer's. A term used to designate a type of pitch made by blending certain oils, waxes or other ingredients with rosin for the coating of beer barrels.

Pyroligeneous Acid. A product of the destructive distillation of hardwoods composed primarily of acetic acid, crude methanol, acetone, tars and oils, and water.

Resin. A large class of synthetic products that have properties similar to natural resin, or rosin, but are chemically different.

Retort. A vessel in which substances are distilled or decomposed by heat.

Rosin. A specific kind of natural resin obtained as a nitreous water-insoluble material from pine oleoresin by removal of the volatile oils, or from tall oil by the removal of the fatty acid components thereof. It consists primarily of tricyclic monocarboxylic acids having the general empirical formula $C_{20}H_{30}O_2$, with small quantities of compounds saponifiable with boiling alcoholic potassium or sodium hydroxide, and some unsaponifiable. The three general classifications or kinds of rosin in commerce are: gum rosin, obtained from the oleoresin collected from living trees; wood rosin, from the oleoresin contained in dead wood, such as stumps and knots; and tall oil rosin, from tall oil.

Rosin, Modified. Rosin that has been treated with heat or catalysts, or both; with or without added chemical substances, so as to cause substantial change in the structure of the rosin acids, as isomerization, hydrogenation, dehydrogenation, or polymerization; without substantial effect on the carboxyl group.

Seal Leg. The line through which an underflow liquid flows, constructed to maintain a liquid trap that will not empty upon nominal pressure changes in the vessel.

Separator. The vessel connected to the vent-relief to separate wood fines carried over in the vent-relief gases, and which permits the steam and turpentine vapors (including noncondensables) to proceed in vapor form to the condenser.

Steam Distillation. A distillation or fractionation in which steam is introduced as one of the vapors or in which steam is injected to provide the heat of the system.

Tall Oil. A generic name for a number of products obtained from the manufacture of wood pulp by the alkali (sulfate) process or more popularly known as the kraft process. To provide some distinction between the various products, designations are often applied in accordance with the process or composition, some of which are crude tall oil, acid refined tall oil, distilled tall oil, tall oil fatty acids, and tall oil rosin.

Tall Oil, Crude. A dark brown mixture of fatty acids, rosin, and neutral materials liberated by the acidification of soap skimmings. The fatty acids are a mixture of oleic acid and linoleic acid with lesser amounts of saturated and other unsaturated fatty acids. The rosin is composed of resin acids similar to those found in gum and wood rosin. The neutral materials are composed mostly of polycyclic hydrocarbons, sterols, and other high-molecular weight alcohols.

Terpenes. The major chemical components of turpentine. A class of unsaturated organic compounds having the empirical formula $C_{10}H_{16}$, occurring in most essential oils and oleoresinuous plants. Structurally, the important terpenes and their derivatives are classified as monocyclic (dipentene), bicyclic (pinene), and acyclic (myrcene).

Turpentine. A light-colored, volatile essential oil from resinuous exudates or resinous wood associated with living or dead coniferous trees, particularly those commonly called pines. There are four kinds of turpentine as follows: (1) gum turpentine, obtained by distilling the gum collected from living pine trees; (2) steam-distilled wood turpentine, from the oleoresin within the wood of pine stumps or cuttings, either by direct steaming of mechanically

disintegrated wood or after solvent extraction of the oleoresin from the wood; (3) sulfate wood turpentine, recovered during the conversion of wood pulp by the kraft (sulfate) process. (Sulfate wood turpentine is somewhat similar to gum turpentine in composition); and (4) destructively distilled wood turpentine, obtained by fractionation of certain oils recovered from the destructive distillation of pine wood.

C. Pesticides and Agricultural Chemicals Industry

Active Ingredient. The element or compound on which a particular pesticide is based to perform its specified function. The active ingredient makes up only a small percentage of the final product which consists of binders, fillers, diluents, etc.

Adjurant. A material which enhances the action of another material.

Aerosols. Gaseous suspensions of minute particles of a liquid or solid.

Algicide. Chemical agent used to destroy or control algae.

Alkaline Hydrolysis. A process whereby wastes are detoxified by extended heat treatment in an alkaline medium. Generally used in the organo-phosphorus pesticide industry.

Amination. The preparation of amines which are derived from ammonia by replacement of one or more hydrogens or organic radicals.

Attractants. Chemical agents which dry or attract insects or other pests to them.

Boiler Blowdown. Wastewater resulting from purging of solid and waste materials from the boiler system. A solids build up in concentration as a result of water evaporation (steam generation) in the boiler.

Broad Spectrum. A wide-range when referring to a pesticde; it means the effectiveness covers a wide-range of pests.

Chlorination. A chemical process where chlorine is introduced into a chemical species by substitution or addition.

Contact Insecticide. Insecticide which requires direct contact with the insect to be affective.

Contract Disposal. Disposal of waste products through an outside party for a fee.

Decanting Operations. Process whereby heavy (light) liquid fractions are drained from a reactor or vessel allowing the lighter (heavier) liquid layer to remain.

Defoliants. A category of chemical agents which when sprayed on plants causes the leaves to fall off prematurely.

Desiccants. Chemical used as a drying agent. Substances which have such a great affinity for water that it will abstract it from a great many fluid materials.

Detoxification. A process to remove or neutralize components in a waste stream which inhibit or stop biological growth.

Dust. Dry, solid powder. When applied to pesticide production implies a dry, powder form product.

Emulsifiable Concentration. Pesticide in the concentrate liquid form which when added to another liquid forms a stable colloidal discharge form application.

Formulators. A segment of the Pesticide industry which does not manufacture pesticides but mixes and blends active ingredients with binders, fillers, and diluents to produce the final product for distribution.

Fumigant. A chemical compound which acts in the gaseous state to destroy insects and their larva and other pests.

Fungicides. A category of chemical agents used to destroy fungi.

Granular. For a grainy texture or composition.

Halogenated-Organic Pesticides. A category of pesticides which uses halogenated, primarily chlorinated, organic compounds as the active ingredients.

Herbicide. Category of chemical agents used to destroy or control undesirable plant life such as weeds.

Insecticide. Chemical agent used to destroy insects.

LD_{50}. Abbreviation for lethal dose 50 - a dose of substances which is fatal to 50% of the test animals.

Metallo-Organic Pesticides. A category of pesticides structured around a heavy metal as the active species.

Nemataude. A chemical agent used to kill plant - parasitic nematodes (i.e., unsegmented worms).

Noncontact Wastewater. Wastewater which does not come in direct contact with process materials.

Non-Process Water. Waters which do not come in contact with the product, or by-products such as cooling water, boiler blowdown, etc.

Operations and Maintenance. Costs required to operate and maintain pollution abatement equipment including labor, material, insurance, taxes, solid waste disposal, etc.

Organo-Nitrogen Pesticides. A category of pesticides which uses nitrogenous compounds as the active ingredients.

Organo-Phosphorus Pesticides. A category of pesticides which uses phosphate or phosphorus compounds as the active ingredients.

Packagers. The last step in preparing a pesticide for distribution to the consumer. This segment of the industry takes the final formulated product and puts it into a marketable container such as drums, bottles, aerosol cans, bags, etc.

Pesticides. General term describing chemical agents which are used to destroy pests. Pesticides includes herbicides, insecticides, fungicides, etc., and each type of pesticide is normally specific to the pest species it is meant to control.

Plant Visitation. Part of data collection phase of the study involving a visit to a pesticide production facility.

Prilled. To have been formed into pellet-sized crystals or spherical particles.

Process Water. All waters that come in direct contact with the raw materials and intermediate products.

Rodenticides. Category of chemical agents which are used to kill and destroy rodents, i.e., rats and mice.

Solution. A single phase, homogeneous liquid that is a mixture in which the compounds are uniformly destroyed.

Stripper. A device in which relatively volatile components are removed from a mixture by distillation or by passage of stream through the mixture.

Wet Air Pollution Control. The technique of air pollution abatement utilizing water as an absorptive media.

D. Adhesive and Sealants Industry

Adherend. The term adherend is generally used to refer to the body held to another body by the adhesive. The process of attaching one adherend to another by means of adhesive is generally referred to as bonding.

Adhesive. Current usage defines an adhesive as a substance capable of holding materials together by surface attachment. The term adhesive is now considered to be a general term that includes other materials, such as cement, glue, mucilage, and paste.

Carrier. A carrier is usually a thin fabric or foil used to support adhesive composition in order to provide a dry film adhesive.

Catalysts. Catalysts are substances which markedly speed up the cure of an adhesive when added in minor amounts as compared to the amounts of the primary reactants. Catalysts are commonly used to speed up the curing of cross-linking of urea-formaldehyde wood adhesives.

Cement. The term cement is commonly used to refer to adhesives based on rubbers or thermoplastic dispersed in organic solvents and which set by loss of solvent.

Double-Effect Evaporators. Double-effect evaporators are two evaporators in series where the vapors from one are used to boil liquid in the other.

Emulsion. Emulsion is a suspension of fine droplets of one liquid in another.

Extenders. Extenders are substances generally having some adhesive action. They are added to an adhesive to reduce the amount of primary binder required per unit area.

Fillers. Fillers are relatively nonadhesive substances added to an adhesive to improve its working properties, permanence, strength, or other qualities.

Fortifiers. Fortifiers are materials which are added to an adhesive binder primarily to improve the permanence of the resultant bond.

Glue. The term glue originally referred to adhesives prepared from animal proteins, such as hides, hoofs, cartilage, and tendons.

Hardeners. Hardeners are substances or mixtures of substances added to an adhesive to promote or control the curing reaction by taking part in it. A hardener is an actual chemical reactant in the curing reaction as compared to the catalyst which does not react directly but merely controls the rate of reaction.

Humectant. Humectant is an agent which adsorbs water. It is often added to resin formulations in order to increase water absorption and thereby minimize problems associated with electrostatic charge.

Mucilage. A mucilage is an adhesive prepared from vegetable gums and water and is mainly used for bonding paper.

Phenol. Phenol is a class of cyclic organic derivatives with the basic chemical formula C_6H_5OH.

Polymer. Polymer is a high molecular weight organic compound, natural or synthetic, whose structure can be represented by a repeated small unit $\pm$ the (MER) 1.

Preservatives. Preservatives are agents added to certain adhesives to retard or prevent decomposition by microorganisms, either while the adhesive is being stored or applied or during service of the completed bond. These agents are usually most important in formulations containing carbohydrates or proteins, such as flour, starch, casein, or animal proteins that are readily attacked by mold, fungi, or bacteria.

Resin. Resin is any of a class of solid or semi-solid organic products of natural or synthetic origin, generally of high molecular weight with no definite melting point. Most resins are polymers.

Solvents. Solvents are needed in most adhesives to disperse the binder to a spreadable liquid form. In most wood-and-paper bonding adhesives the solvent is water. In many adhesives based on synthetic resins, rubbers, and even natural gums, a variety of organic solvents are required to achieve the necessary solubility and to provide some minimum percentage of base solids.

Thinners or Dilvents. Thinners or dilvents are volatile liquids added to an adhesive to modify the consistency or other properties.

TKN (Total Kjeldahl Nitrogen). Includes ammonia and organic nitrogen but does not include nitrite and nitrate nitrogen.

E. Explosives Industry

Aluminum. Metal used to increase the energy of a propellant and explosive.

Bagasse. Plant residue used to bind explosives.

Ball Powder. Small arms powder made by emulsifying a mixture of propellant and solvent in a liquid in which they are not soluble. Evaporation of the emulsifying liquid and the solvent yields quite uniform round balls of powder.

Binder. In composition propellant, the solid matrix in which the granular ingredients are held.

Booster Charge. A charge igniter that is ignited by the electric match and, in turn, initiates combustion or detonation in the propellant.

Deterrent. A propellant additive that reduces the burning rate.

DNT. Dinitrotoluene. Added as a deterrent to propellant grains; reduces burning rate.

Double Base. A propellant which is made from two explosive substances, e.g., nitrocellulose, gelatinized with nitroglycerin.

Electric Match. A bead of easily-ignited explosives formed on a thin wire used as an igniter.

Explosives. A substance mixture capable of rapid conversion into more stable products, with the liberation of heat and usually the formation of gases.

Extruded Propellant. Any propellant made by pressing solvent softened or gelatinized nitrocellulose through a dye to form grains.

Grains. A single piece of formed propellant, regardless of size.

"Green". Describes a batch of cotton that was not given enough time to fully nitrate, or a cost grain not yet fully cured.

Inhibitor. A coating on a propellant grain which prevents burning at that point.

Metal Modifiers. Metals used in explosives or propellants to modify their property, i.e. aluminum increases the energy of an explosion.

NC Fines. Fine nitrocellulose particles as a result of the purification of nitrocellulose.

Pink Water. After loading TNT into munitions, the loading bays are washed. TNT particles in concentrations of 100-150 mg/L produce in sunlight an orange or light-rust colored effluent termed "pink water".

Primer. A small charge of easily-ignited material used to ignite the working charge of a gun or rocket.

Propellant. Any substance which can react to form more stable substances in the absence of atmospheric oxygen, giving off hot combustion gases capable of doing useful work.

Red Water. The effluent coming from the sellite wash of crude TNT. Sellite has a selective affinity for the unsymmetrical, unwanted isomers of TNT. The result is a blood red effluent high in sulfate concentration.

Sellite. Sodium sulfite, used in the finishing operation of TNT.

Single Base. A propellant which contains only one explosive ingredient.

Smokeless Powder. Nitrocellulose base propellant.

Solvent. As used in propellants either: (1) a substance added to nitrocellulose to soften it so that it can be formed; or (2) a substance that dissolves both propellant and inhibiting materials and is used to bond inhibitors to grain.

Stabilizer. A substance added to nitrocellulose propellants to prevent decomposition product from catalyzing further decomposition.

Triple Base. A propellant that contains three explosives bases, e.g., NC-NG-nitroguanidine small-arms powder.

Yellow Water. The effluent coming from the first wash of crude TNT in its purification process.

F. Carbon Black Industry

Blowdown. Water intentionally discharged from a cooling or heating system to maintain the dissolved solids concentration of the circulating water below a specific critical level.

Carbon Black. A family of industrial carbons used principally as reinforcing agents in rubber and as black pigments in inks, coatings and plastics.

Channel Black. Carbon black manufactured by the channel process. It is produced by the incomplete combustion of natural gas, and is deposited, then scraped off, a moving channel.

Colloidal. A solid, liquid, or gaseous substance made up of very small, insoluble, nondiffusible particles (as single large molecules or masses of smaller molecules) that remain in suspension in a surrounding solid, liquid, or gaseous medium; of matter consisting of such a substance dispersed in a surrounding medium. All living matter contains colloidal material, and a colloid has only a negligible effect on the freezing point, or vapor tension of the surrounding medium.

Furnace Black. Carbon black manufactured by the furnace process; produced by partial combustion of hydrocarbons in insulated furnaces.

Impingement. To strike with a sharp collision.

Lamp Black. Carbon black manufactured by the burning of petroleum or coal tar residues in open shallow pans.

Quasigraphitic. Having graphite-like qualities.

Thermal Black. Carbon black manufactured by the thermal process; produced by thermal decomposition (cracking) of natural gas.

G. Photographic Processing Industry

Bleaching. A step in color film processing whereby the silver image which is formed with the dye image is converted back to silver halide by reactions with ferricyanide and sodium bromide or ferric EDTA.

Couplers. A group of organic chemicals which react with the oxidized components of the developers to form color dyes. They are either evaporated in the film emulsion at the time of manufacture (e.g. Ektachrome film) or they are included in the color developing solution (e.g. Kodachrome film).

Development. A step in photoprocessing whereby the latent image is made visible in a developer solution.

"Dip and Dunk". An automatic processing machine whereby strips of film are "dipped" into successive photoprocessing tanks and held for development.

Dye Image. A color image formed when the oxidized developer combines with the color couplers.

Fix. A step in photoprocessing whereby the unexposed and undeveloped silver must be removed from the emulsion. Common among the solvent fixers are sodium thiosulfate.

Incorporated Couplers. Common to color reversal films, whereby the couplers are included in the film at the time of manufacture.

Negative Film Development. A two-step process whereby following the negative development a controlled exposure of light is directed onto paper through the negative creating a negative of a negative, or a positive image on paper.

"Rack and Tank". See "Dip and Dunk".

Reversal Development. A method of obtaining a positive image on the same film used for the original exposure.

Short Stop. A step in photoprocessing which follows development whereby the basic activators in the developer are neutralized to prevent further development.

Silver Halide. Usually silver bromide, which upon exposure to light converts to metallic silver, forming a latent image.

Three Layers. Common to color film which has three separate layers, including red, blue and green sensitive layers.

H. Hospitals

Amalgam. Any alloy of mercury with another metal or other metals. Silver amalgam is used as a dental filling.

Cathartic. A medicine for stimulating evacuation of the bowels.

Catheter. A slender tube inserted into the body passage, vessel or cavity for passing fluids, making examinations, etc.

Developer. A chemical used to produce a picture from an exposed film, plate or printing paper.

Diagnostic Services. The processing or deciding the nature of a diseased condition by examination of the symptoms.

Diuretic. A drug used to increase the secretion and flow of urine.

Fixer Solution. A chemical used to render photographic emulsions insensitive to light.

Geriatric Hospital. A facility that specializes in the treatment of diseases of old age.

"Hypo". A synonym for fixer solution.

Orthopedic Hospital. A facility that specializes in the treatment of deformities, diseases, and injuries of the bones, joints, muscles, etc.

Pathological Wastes. Waste material that is potentially infected.

Radiograph. A picture produced on a sensitized film or plate by X-rays.

Tissue Fixative. A chemical used to preserve tissue material for subsequent examination.

CONVERSION TABLE

MULTIPLY (ENGLISH UNITS)		by	TO OBTAIN (METRIC UNITS)	
ENGLISH UNIT	ABBREVIATION	CONVERSION	ABBREVIATION	METRIC UNIT
acre	ac	0.405	ha	hectare
acre-foot	ac ft	1233.5	cu m	cubic meter
British Thermal Unit	BTU	0.252	kg cal	kilogram-calory
British Thermal Unit/pound	BTU/lb	0.555	kg cal/kg	kilogram calory/kilogram
cubic foot/minute	cfm	0.028	cu m/min	cubic meter/minute
cubic foot/second	cfs	1.7	cu m/min	cubic meters/minute
cubic foot	cu ft	0.028	cu m	cubic meter
cubic foot	cu ft	28.32	l	liter
cubic inch	cu in	16.39	cu cm	cubic centimeter
degree Fahrenheit	F^o	$0.555(^oF-32)1^*$	^oC	degree Centigrade
foot	ft	0.3048	m	meter
gallon	gal	3.785	l	liter
gallon/minute	gpm	0.0631	l/sec	liter/second
horsepower	hp	0.7457	kw	killowatt
inch	in	2.54	cm	centimeter
inch of mercury	in Hg	0.03342	atm	atmosphere
pound	lb	0.454	kg	kilogram
million gallons/day	mgd	3,785	cu m/day	cubic meters/day
mile	mi	1.609	km	kilometer
pound/square inch (gauge)	psig	$(0.06805\ psig + 1^*)1$	atm	atmospheres (absolute)
square foot	sq ft	0.0929	sq m	square meter
square inch	sq in	6.452	sq cm	square centimeter
ton (short)	t	0.907	kkg	metric ton (1000 kilograms)
yard	y	0.9144	m	meter

*Actual conversion, not a multiplier

DRAFT

[illegible] Protection Agency
[illegible]
[illegible] Street
[illegible] 60604

U.S. ENVIRONMENTAL PROTECTION AGENCY (A-107)
WASHINGTON, D.C. 20460

POSTAGE AND FEES PAID
ENVIRONMENTAL PROTECTION AGENCY
EPA-335