Standard Operating Procedure for Conducting Acute and Chronic Aquatic Toxicity Tests with *Eurytemora affinis*, a Calanoid Copepod

Chesapeake Bay Program

EPA Report Collection
Regional Center for Environmental Information
U.S. EPA Region III
Philadelphia, PA 19103

U.S. EPA Region III
Regional Center for Environmental
Information
1650 Arch Street (3PM52)
Philadelphia, PA 19103

Standard Operating Procedures for Conducting Acute and Chronic Aquatic Toxicity Tests with *Eurytemora affinis*, a Calanoid Copepod

October 1998

University of Maryland
Agricultural Experiment Station
Wye Research and Education Center

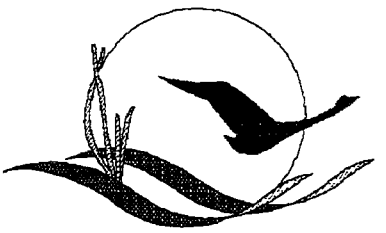

Regional Center for Environmental Information
US EPA Region III
1650 Arch St.
Philadelphia, PA 19103

Chesapeake Bay Program
410 Severn Avenue, Suite 109
Annapolis, Maryland 21403
1-800-YOUR-BAY

http://www.chesapeakebay.net/bayprogram

Printed by the U.S. Environmental Protection Agency for the Chesapeake Bay Program

October 1998

Standard Operating Procedures

For Conducting Acute and Chronic Aquatic Toxicity Tests

with *Eurytemora affinis*, a Calanoid Copepod

Michael C. Ziegenfuss
and
Lenwood W. Hall, Jr.

University of Maryland
Maryland Agricultural Experiment Station
Wye Research and Education Center
Queenstown, Maryland 21658

FOREWORD

There are few estuarine toxicity test protocols currently available for Chesapeake Bay resident aquatic species. The calanoid copepod, *Eurytemora affinis*, was recommended as a test species for Standard Operating Procedures development based on an extensive literature review and synthesis of data from 25 candidate species found in the Chesapeake Bay. This manual outlines standard operating procedures for conducting acute and chronic toxicity tests with *Eurytemora*. The U.S. Environmental Protection Agency and Maryland Department of the Environment provided the funding for the development of this manual.

TABLE OF CONTENTS

		Page
	FOREWORD	i
1.0	INTRODUCTION	1
2.0	DISTRIBUTION	1
3.0	LIFE CYCLE	2
4.0	TAXONOMY	2
5.0	TERMINOLOGY	4
6.0	SUMMARY OF TEST PROCEDURES	5
7.0	INTERFERENCES	5
8.0	HEALTH AND SAFETY	5
	8.1 GENERAL PRECAUTIONS	5
	8.2 SAFETY EQUIPMENT	6
	8.3 GENERAL LABORATORY OPERATION	6
9.0	QUALITY ASSURANCE	6
	9.1 INTRODUCTION	6
	9.2 FACILITIES AND EQUIPMENT	7
	9.3 TEST ORGANISMS	7
	9.4 CULTURE AND DILUTION WATER	7
	9.5 TEST SUBSTANCE HANDLING	7
	9.6 TEST CONDITIONS	7
	9.7 ANALYTICAL METHODS	8
	9.8 CALIBRATION AND STANDARDIZATION	8
	9.9 ACCEPTABILITY OF TOXICITY TEST RESULTS	8
	9.10 REFERENCE TOXICANTS	8
	9.11 RECORD KEEPING	8
10.0	APPARATUS, EQUIPMENT, AND MATERIALS	9
	10.1 FACILITIES	9
	10.2 CONSTRUCTION MATERIALS	9
	10.3 MATERIALS FOR CULTURING AND TESTING	11
	10.4 TEST CHAMBERS	12
	10.5 CLEANING	12
11.0	CONTROL AND DILUTION WATER	14
12.0	TEST SUBSTANCE SAMPLING, RECEIVING, HANDLING, AND STORAGE	14

13.0 ORGANISM CULTURE PROCEDURES 14
13.1 INTRODUCTION 14
13.2 CULTURE WATER 16
13.3 CULTURE VESSELS 16
13.4 SALINITY, TEMPERATURE, AND PHOTOPERIOD 16
13.5 RENEWAL OF CULTURE WATER 17
13.6 FOOD AND FEEDING REGIME 17
13.7 PHYTOPLANKTON CULTURE 17
13.8 CULTURE RECORDS 18
14.0 TOXICITY TEST PROCEDURES 20
14.1 EXPERIMENTAL DESIGN 20
14.2 RANGE-FINDING TEST 20
14.3 DEFINITIVE TEST 20
14.4 TEST SOLUTIONS 22
14.5 OBTAINING NEONATES FOR TOXICITY TESTS 22
14.6 STARTING THE TEST 22
14.7 TEMPERATURE AND PHOTOPERIOD 23
14.8 FEEDING 23
14.9 PHYSICAL AND CHEMICAL ANALYSIS 25
14.10 TERMINATING THE TEST 25
15.0 DATA ANALYSIS 29

16.0 REFERENCES 31

APPENDICES 35

A Summary of *Eurytemora affinis* control survival during acute and chronic toxicity testing over a four-year period.

B Summary of *Eurytemora affinis* sublethal endpoints (reproduction and growth) evaluated under control conditions from 8 day tests.

C Single laboratory precision of the 24 *Eurytemora affinis* estuarine toxicity test at 15 ppt salinity with the reference toxicant cadmium chloride.

D Relative sensitivity of *Eurytemora affinis* to selected toxic substances.

1.0 INTRODUCTION

Few standardized estuarine toxicity test protocols are currently available for Chesapeake Bay resident aquatic species. The widespread availability of such protocols would be an asset in the region's ambient toxicity testing, estuarine criteria development (or other single chemical tests), and effluent toxicity testing efforts which are currently limited in scope due to the availability of standardized protocols for only a few test species. This lack of protocols may be preventing the inclusion of locally important and ecologically key species, which could lead to erroneous ambient toxicity assessments, development of criteria which are not protective of the Chesapeake Bay aquatic biota, or inaccurate assessments of potential harm of effluents to receiving water biota due to the use of species which may be much more tolerant (or sensitive) to toxicants than species resident to the receiving waters of concern.

The goal of the "Chesapeake Bay Basinwide Toxics Reduction Strategy" is to reduce input of toxic substances to levels which do not result in toxic impact on Bay living resources (Chesapeake Executive Council, 1989). Therefore, it is necessary to assess accurately the effect of toxic substances on Bay biota. Development of standardized toxicity testing protocols for key Chesapeake Bay species will provide the mechanism for enhancing the reliability of toxicity assessments and ultimately, the protection of Chesapeake Bay aquatic organisms from impact of toxic substances.

Eurytemora affinis, a calanoid copepod, was selected for standard toxicity testing protocol development subsequent to screening 25 resident Chesapeake Bay species including fish, invertebrates, and plants (Ziegenfuss and Hall, 1993). Eurytemora was selected because of its ecological importance as an essential component in the trophic structure of the estuary, its relative practicability of culturing in the laboratory for year-round availability, and its sensitivity to toxic substances. The standard operating procedures described in this document provide detailed procedures for culturing, holding, and toxicity testing of *E. affinis*.

2.0 DISTRIBUTION

Copepods of the genus *Eurytemora* are distributed worldwide depending on suitable temperature and salinity. This species tolerates a wide salinity range (0-33 ppt), however the optimum range is 5-15 ppt (Jeffries, 1962). *Eurytemora* also tolerate a broad temperature range (2.5-35 °C) with a resistance to extremes correlated with salinity (Bradley, 1975). Its habitat in North America as described by Wilson and Yeatman (1959) includes lakes, ponds, and fresh and brackish waters of the Atlantic, Pacific and Gulf coasts. The east coast distribution extends from Miramichi Estuary, Canada to the Florida Keys. The west coast range for *E.*

affinis includes Vancouver, British Columbia to San Francisco Bay. *Eurytemora* is a year-round resident dominating the zooplankton community in winter and early spring in Chesapeake Bay (Tepper, 1986). It is confined to lower saline upper reaches of Bay tributaries during the warm summer months.

3.0 LIFE CYCLE

Eurytemora affinis is obligate sexual in its reproduction (Figure 1 from Gurney, 1931). The antennæ and modified fifth legs of the male are used to clasp the female. During clasping, the male transfers sperm to the female in spermatophores usually with the aid of the legs. Sperm is stored in a ventral area of the female genital segment that serves as a seminal receptacle. Fertilization occurs as the eggs leave the female reproductive tract. Fertilized eggs are retained by the female in ovisacs containing 5 to 40 eggs located ventrally on the genital segment. Development of the eggs is temperature-dependant and can range from >12 days at 5 °C to approximately 1 day at 25 °C. Growth and time to sexual maturity are temperature and food-dependent. During development, the molting process includes six nauplii stages and six copepodid instars, the last of which is the adult. Generation time may vary from about 105 days at 2 °C to nine days at 23.5 °C (Katona, 1970).

4.0 TAXONOMY

The following section describes anatomical features of female and male *Eurytemora affinis* (Mori,1964). The female metasome has five segments with the fifth segment expanded to form wing-like structures. The urosome has three segments and is symmetrical. The anal segment and caudal rami are densely covered with spine-like hairs on the dorsal side. Fifth legs are symmetrical and the terminal segment is small, globular and contains two spines. One spine is long and located on the terminal segment and the second spine is short and located on the outer distal corner. The average length of females is about 1.42 mm.

Figure 1. Diagrams of male and female *E. affinis.* A - male showing urosome with five segments; B - right first antenna of male (right antenna has asymmetric apering from proximal to distal end unlike left antenna of male and both first antennæ of female); C - female (ovisac of gravid female is carried on ventral sice of 3 segmented urosome); D - dorsal view of female showing wing-like structures on last segment of metasome.

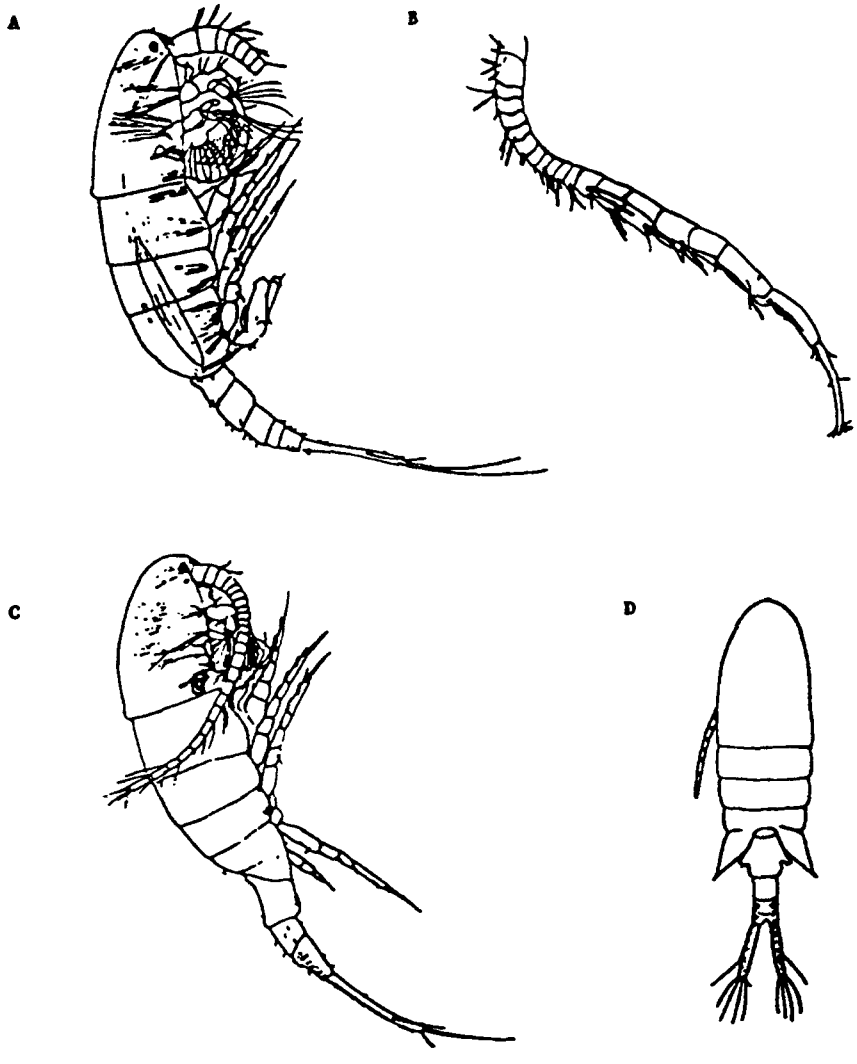

The first right anterior antenna of the male is modified into a grasping organ. The metasome has five segments with the last segment rounded posteriorly. The urosome has five segments and is symmetrical. The anal segment has many spine-like hairs. Caudal rami also have a row of fine hairs located on their inner border. Rami setæ are well developed. Fifth legs are asymmetrical with the right leg being larger. The right leg has four segments with the terminal segment being fairly large at the proximal end and tapering to form a blunt point. The left leg has four segments with the terminal segment being heavier but shorter than that of the right leg. It ends in a complicated structure. Males are usually smaller than females, with an average length of 1.15 mm.

5.0 TERMINOLOGY

Lethality (mortality) is the most often measured endpoint in toxicity tests. Experimentally, the effect on 50% of a group of test organisms is the most reproducible and easily determined measure of toxicity. Forty-eight and/or 96 hours are short exposure durations that provide a rapid measure of toxicity. The measure of acute toxicity is the LC50 (median lethal concentration) expressed as a 48-h or 96-h value. The LC50 is the statistically derived best estimate of the sample concentration that is lethal to 50% of the test organisms at the end of the exposure duration.

Chronic toxicity tests for *E. affinis* require a longer exposure period, 8-d at 25 °C, spanning the post-hatch (naupliar) lifestage to sexual maturity. Measures of chronic toxicity include mortality and sublethal effects such as growth and reproduction or fecundity. The chronic toxicity value is derived by calculating the geometric mean of the No Observed Effect Concentration (NOEC) and the Lowest Observed Effect Concentration (LOEC).

Acute and chronic tests can be conducted by at least three methods. Static tests are conducted by placing test solution and organisms in chambers within test beakers for the duration of the test without renewal of test solution. Static renewal tests are conducted by periodically (usually every 24-h) replenishing the test solution with fresh solution of the same composition. Flow-through tests are conducted by continuously passing fresh test solution over the organisms for the duration of the exposure. A metering system (serial diluter or fluid metering pump) controls the flow of sample and dilution water.

6.0 SUMMARY OF TEST PROCEDURES

Separate groups of nauplii (less than 24-hours old) are exposed to various treatments of test solution for a specific period of time. A control treatment is used to provide a measure of acceptability of the test by providing information relative to health or quality of test organisms, the suitability of dilution water, testing conditions (temperature, light regime, etc.) and handling procedures. Control water consists of contaminant-free estuarine water adjusted to a desired salinity matching the test solution. Test treatments consist of undiluted sample or a series of dilutions (or concentrations) in geometric progression.

The acute toxicity test is 48 or 96 hours in duration and provides mortality data at the end of the exposure period. The chronic test has an 8-day exposure period (at 25 °C) at which time mortality is determined. In addition to lethality, reproduction (fecundity) and growth (maturation) are evaluated.

7.0 INTERFERENCES

Toxic substances may be introduced by contaminants in dilution water and testing apparatus. Improper collection and handling of test sample solutions may also adversely affect test results. Adverse effects of low dissolved oxygen and extreme of pH may mask the presence of toxic substances. Pathogenic and/or predatory organisms in the dilution water or test water may affect test organism survival. Inadvertent introduction of copepods from test water (ambient estuarine water) into test chambers will also confound test results. Food (phytoplankton) added during the test, i.e., renewal of ambient water may sequester toxic substances and also affect test results.

8.0 HEALTH AND SAFETY

8.1 General Precautions

Conducting toxicity tests may involve differing levels of risk. Effluents are accepted for testing only with a copy of the chemical composition shown in the NPDES discharge permit (preferably prior to delivery of sample). This allows adequate safety precautions to be taken to prevent injury. Personnel conducting tests protect themselves by taking all safety precautions necessary to avoid inhalation or absorption of toxic substances through the skin and to prevent asphyxiation due to lack of oxygen or presence of volatile noxious substances.

8.2 Safety Equipment

Personnel use safety equipment, as required, such as disposable rubber gloves, lab coats and/or aprons, respirators, and safety glasses. Laboratory safety equipment includes a proper ventilation system, first aid kits, fire extinguishers and blanket, and an emergency eye wash and shower unit.

8.3 General Laboratory Operation

Work with samples containing suspected toxic substances is performed in compliance with accepted rules pertaining to the handling of hazardous materials. Toxicity tests with volatile compounds are conducted under a ventilation hood. Because the chemical composition and toxicity of samples are usually poorly understood, samples are considered potential health hazards and exposure to them is minimized.

Toxicity testing and organism culture maintenance are conducted in separate defined areas of the laboratory. Containers used in the laboratory are always labeled to indicate their contents and prevent contamination. The laboratory is generally kept clean and orderly to promote safety and reliable test results. Guidance on safe practices when collecting samples and conducting toxicity tests is frequently obtained from the permittee, in the case of discharge effluents, and general industrial safety manuals including U.S. EPA (1977) and Waters and Jameson (1984).

9.0 QUALITY ASSURANCE

9.1 Introduction

The following quality assurance (QA) section is adapted from U.S. EPA (1991a). Quality assurance practices for conducting toxicity tests with *Eurytemora* should address all aspects that affect the integrity of the final data, such as: (1) test substance sampling, handling, and storage; (2) quality of dilution water; (3) condition of test organisms; (4) condition and operation of laboratory equipment; (5) test conditions; (6) instrument calibration; (7) replication; (8) use of reference toxicants; (9) recording data and observations; and (10) data evaluation. For more information on quality assurance and good laboratory practices related to toxicity testing see: FDA (1978), U.S. EPA (1975, 1979a, 1980a, 1980b, 1991b), Dewoskin (1984), and Taylor (1987).

9.2 Facilities and Equipment

Separate culture and toxicity test areas are necessary to avoid possible cross contamination which could result in the loss of cultures. The laboratory should be equipped with a ventilation system to prevent recirculation of contaminated air from testing areas, sample preparation and storage areas, and chemical analysis areas. In addition to space and ventilation requirements, temperature control equipment must be capable of maintaining test temperatures with minimal variation, programmable lighting is required to simulate day-night conditions, and an oil-free mechanical air supply is needed for both toxicity testing and culture areas.

9.3 Test Organisms

Test organisms must be identified to species. The organisms used in toxicity testing experiments must appear healthy, vigorous, and have low mortality in cultures, during holding, and in test controls. Copepods should be cultured at the same (within 3 ppt) salinity as the test salinity. All copepods in a test should be the same lifestage (less than 24-hours). In most instances, tests are initiated with nauplii (24-hours old or less) because this lifestage is generally considered to be most sensitive.

9.4 Culture and Dilution Water

Water used for culturing and testing purposes should be from the same source. The water should be tested for toxic contaminants (metals and organics) at least once per year.

9.5 Test Substance Handling

Procedures for sampling, receiving, handling, and storage should conform to the conditions described in section 12, TEST SUBSTANCE SAMPLING, RECEIVING, HANDLING, AND STORAGE.

9.6 Test Conditions

The temperature of the test solution should be measured by placing a thermometer or probe directly into the test solution or a surrogate beaker containing the same volume of solution as the test beaker. Dissolved oxygen concentration, pH, and salinity must be measured in the actual test solutions. Test condition parameters should be measured at least initially and at the end of the exposure duration.

9.7 Analytical Methods

All routine chemical and physical analysis (T, DO, Sal, pH, etc.) of culture and dilution water, and test solutions are performed as outlined in U.S.EPA (1979a, b). Reagent containers, chemical stock solutions, and working solutions are dated when received from the supplier and shelf life is not exceeded.

9.8 Calibration and Standardization

Instruments used for routine chemical and physical parameter measurements are calibrated prior to use according to the instrument manufacturer's procedures.

9.9 Acceptability of Toxicity Test Results

Control survival data from 96-h and 8-d tests (and a few 48 h tests) conducted during a four-year period are presented in Appendix A. The mean survival for the 96 h and 8 d tests ranged from 82 - 86 %. Based on these data, control survival (mean %) for *E. affinis* should equal or exceed 80% in acute or chronic tests. A summary of the reproduction and growth endpoints from control conditions are presented in Appendix B. Due to the variability with these endpoints, an acceptable value cannot be recommended. Within test comparisons of control and test conditions are used to determine statistical differences.

9.10 Reference Toxicants

Reference toxicants are used to establish the validity of toxicity data generated from toxicity tests. The reference toxicants provide information regarding the relative health and sensitivity of the copepods used in toxicity testing. Several toxicants, $CdCl_2$ (cadmium chloride), $CuSO_4$ (copper sulfate), and SDS (sodium dodecyl sulfate), are available for use. Data generated in our laboratory with cadmium chloride are presented in Appendix C. A control chart (Figure 2) is prepared for each reference toxicant and LC50 values are plotted to determine if results are within expected limits (U.S. EPA, 1991a). If the LC50 does not fall in the expected range, then the sensitivity of the copepods are suspect. The sensitivity of *E. affinis* to various other toxic chemicals is presented in Appendix D.

9.11 Record Keeping

Proper record keeping is very important. Bound notebooks are used to maintain detailed records of culture maintenance, equipment maintenance and calibration, receipt and storage of test solutions, test conditions employed, and results. Annotations are made in ink to prevent the loss of information. All data

from the toxicity tests are kept in either bound notebooks or bioassay data sheets.

10.0 APPARATUS, EQUIPMENT, AND MATERIALS

10.1 Facilities

The bioassay laboratory should consist of separate and defined toxicity testing and organism culture areas. The laboratory should be equipped with an oil-free air supply, programmable lighting for day-night simulation, and controlled temperature. Biological incubators can be used for conducting toxicological tests to increase precision in temperature. A water treatment system, such as Millipore Milli-Q, Super-Q, or equivalent, is required to deliver contaminant-free freshwater. Water supply lines should be constructed from PVC or other non-toxic plastic.

10.2 Construction Materials

Glass, polycarbonate, Nitex screen, and 100% clear silicon adhesive are used for construction of equipment that comes in contact with copepods, culture water, and test solutions.

Figure 2. Control chart and calculations for reference toxicant tests

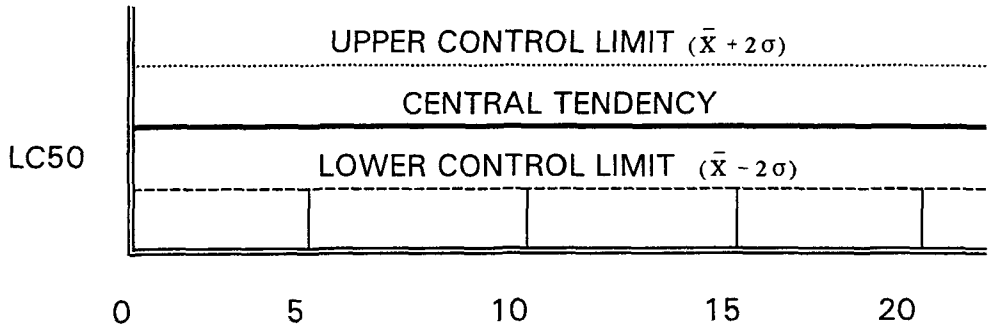

$$\bar{X} = \sum_{i=1}^{n} \frac{X_i}{n} \qquad \sigma = \sqrt{\frac{\sum_{i=1}^{n} X_i^2 - \left(\sum_{i=1}^{n} X_i\right)^2 / n}{(n-1)}}$$

X_i = Successive LC50's from toxicity tests

n = Number of tests

$\bar{X}$ = Mean LC50

σ = Standard deviation

10.3 Materials For Culturing and Testing

Eurytemora affinis can be obtained from cultures at the University of Maryland's Wye Research and Education Center, Queenstown, Maryland, or the University of Maryland's Chesapeake Biological Laboratory, Solomons, Maryland. A detailed description of culturing and testing material is presented below:

- Algal cultures, *Isochrysis galbana, Thalassiosira pseudonana* and *T. fluviatilis*, can be obtained from commercial sources.
- Glass aquaria, 10-18 l capacity, are used for culturing copepods.
- Glass Fernbach flasks, 2.8 l capacity, are used for culturing algae for feeding copepods.
- Non-toxic plastic buckets, 7 l capacity, are used for mixing culture and dilution water to the desired salinity.
- Airline tubing, airstones, disposable sterile plugged 1.0 ml pipettes, and gang valves are required for aeration of cultures.
- Polycarbonate carboys, 20 l capacity, are used for holding sterile culture water.
- Autoclave or filter apparatus are used for sterilizing water for algal cultures.
- Nitex screens (mesh sizes 202 and 53μm, 250ml), polycarbonate jars, and wash bottles are used for sorting and containing copepods.
- Borosilicate glass wide-bore pipettes with fire-polished ends and bulbs are used for transferring copepods.
- Glass beakers, 150 - 250ml capacity, are used as test vessels during toxicity tests.
- Polycarbonate test chambers (Section 10.4) and plastic-covered paperclips are used during testing.
- A dissecting microscope is required for counting copepods and a compound microscope is used for counting algæ.
- A Spencer improved Neubauer corpuscle counting chamber, or equivalent, is needed for determining algal densities.
- Refractometer, pH meter, dissolved oxygen meter, and thermometer are required for measuring routine physical and chemical parameters in culture water and test solutions.
- Adjustable pipettes, 0.2, 1.0, and 5.0ml with disposable tips are used for mixing test solutions, and adding reagents to algal growth medium.
- Waterproof markers are used for labeling containers in the laboratory.
- Reagents needed for algal growth medium, as described by Guillard (1975), include $NaNO_3$, NaH_2PO_4, Na_2SiO_3, Na_2 EDTA, $FeCl_3$, $CuSO_4$, $ZnSO_4$, $CoCl_2$, $MnCl_2$, $NaMoO_4$, Thiamine-HCl, Biotin, and vitamin B_{12}.

- Synthetic seasalts or hypersaline brine are required for salinity adjustments of culture water and test solutions.
- Reagents needed for routine physical and chemical water quality parameters include pH calibration buffers (4, 7, and 10) and electrode filling and storage solutions, dissolved oxygen probe membranes and filling solution, and salinity standards for refractometer calibration.
- Laboratory glassware required for preparation of standard, chemical stocks, test solutions and dilutions include beakers (150 ml - 2.0 l), volumetric flasks, and graduated cylinders.
- Reference toxicant solutions can be prepared in-house by obtaining reagents (see section 9.10) from a commercial supplier.
- Neutral buffered formalin (10%) or ethanol is used to preserve adult copepods at the end of a chronic test.
- Scintillation vials (20ml) are used to contain preserved copepods at the termination of a chronic test.

10.4 Test Chambers

Test chambers are constructed from rigid polycarbonate tube (6.35cm height × 3.8cm diameter). Silicon adhesive is used in minimal amounts to attach 53μm mesh Nitex screen to the bottom of the chamber. Subsequently, all test chambers are leached for 24 hours in contaminant-free freshwater prior to use in toxicity experiments. Test chambers are suspended within 150 - 250 ml glass beakers with plastic-covered paper clips (Figure 3.)

10.5 Cleaning

All glassware used to prepare stock solutions and test solutions, and contain organisms during toxicity tests are cleaned before use according to procedures outlined by the U.S. EPA (1985) and ASTM (1980). Briefly, glassware is washed with detergent and rinsed with tap water, 10% nitric or hydrochloric acid, deionized water, pesticide-free acetone, followed by a minimum of three rinses with de-ionized water. Polycarbonate chambers are cleaned following similar procedures except that methanol is substituted for acetone.

Figure 3. Beaker and test chamber used for toxicity tests.

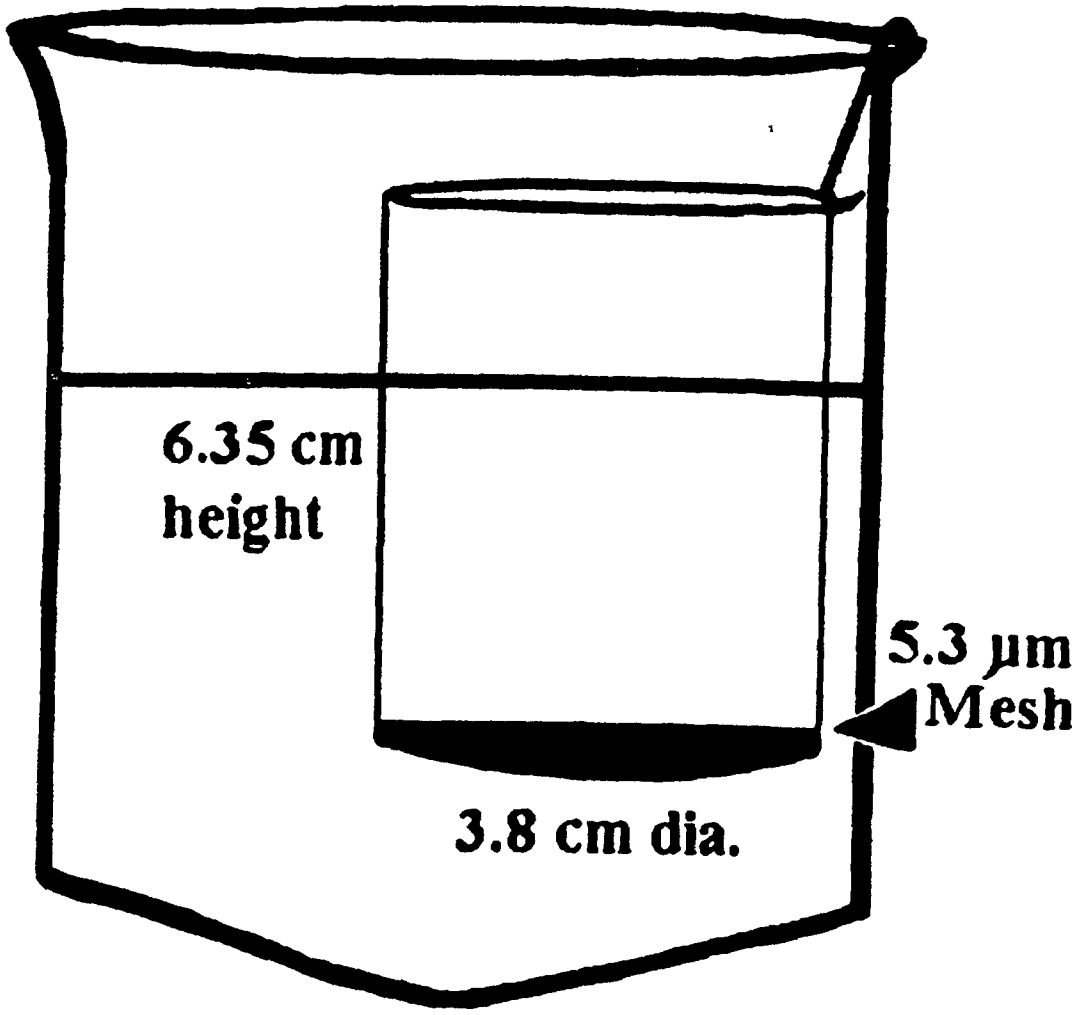

11.0 CONTROL AND DILUTION WATER

Natural estuarine water is preferred over synthetic seawater for use as culture, control, and dilution water. Natural estuarine water contains necessary trace metals, biogenic colloids, and some of the microbial components necessary for growth, survival, and reproduction of estuarine organisms. Salinity adjustments are frequently necessary to match the salinity of receiving waters during effluent testing, standardizing salinities for ambient toxicity testing, or determining the effect of salinity on single or multiple chemicals. The salinity of the natural water can be increased with hypersaline brine (100 ppt) or a good-quality commercial seasalt such as HW Marine Mix (Hawaiian Marine Imports, Inc., Houston, TX). De-ionized water is used to reduce the salinity of natural water. The estuarine water should be filtered (0.4um) or autoclaved prior to use to eliminate the introduction of predators, feral copepods, and undesirable phytoplankton into the cultures and test conditions.

12.0 TEST SUBSTANCE SAMPLING, RECEIVING, HANDLING, AND STORAGE

See U.S. EPA (1991a) section 8 for a detailed discussion of effluent and receiving water sampling and handling. The decision to collect grab or composite samples is based on the objectives of the study. Collection of composite samples should not exceed 24-h so that dilution of toxicity spikes is minimized. Sample containers should be constructed from non-toxic plastic or glass which has been appropriately cleaned (Section 10.5). Samples should be shipped on ice and stored at 4 C to minimize microbial action, chemical reaction, and volatilization. A chain of custody form must accompany all samples (Figure 4). Sample holding time, the time elapsed between the collection of the sample and the initiation of the toxicity test, should not exceed 36 hours. Health and safety issues addressed in Section 8.3 should be followed when handling the samples.

13.0 ORGANISM CULTURE PROCEDURES

13.1 Introduction

Techniques for rearing *Eurytemora affinis* in the laboratory have been described by Heinle (1969), Katona (1970), and Hall et al. (1991). Brood stock are most easily obtained with plankton nets in the spring when *Eurytemora* dominate the zooplankton community in Chesapeake Bay. During summer months, *Eurytemora* can be obtained in lower saline water in tributaries of the Bay. Continuous cultures of *Eurytemora affinis* require minimal space, water, and equipment. This species is relatively easy to culture and requires minimal maintenance.

FIGURE 4. CHAIN OF CUSTODY FORM FOR RECEIVING AND HANDLINGTEST SUBJECTS

Project/Facility Name _____
Permit No. _____
Sample I.D. No. _____
Outfall No. _____
Collected by _____

Sample Type:

Grab Collected _____ / /
Time Date
_____ / /
Time Date

Grab Composite _____ / /
Time Date

Total No. Grab Samples: _____
Sampling Interval: _____

Automatic Composite
Collected from: _____ / /
Time Date
to: _____ / /
Time Date

Sample Cooled
During Collection Yes ___ No___ Name___
During Delivery Yes ___ No___ Name___
Upon Receipt Yes ___ No___ Name___

On-site Physical Chemistry Measurement
Conducted by: _____
Date/Time: _____
pH _____
Dissolved Oxygen, mg/l _____
Temperature, °C _____
Salinity, ppt _____
Conductivity, μmhos _____

Comments _____

Sample Possession

From: _____ To: _____
Name, Date, Time Name, Date, Time

From: _____ To: _____
Name Date, Time Name, Date, Time

In addition to copepod cultures,monocultures of microalgæ must be maintained as a source of food for the copepods. Laboratory cultures provide year-round availability of copepods for toxicity testing. The generation time of *Eurytemora* is short (approximately 8-d at 25 °C), therefore high density cultures can be achieved in relatively little time. Established cultures contain all developmental stages (egg-adult). The number of animals in each culture is maintained at approximately 100 per liter of culture medium.

13.2 Culture Water

Natural estuarine water is preferred over synthetic saltwater for culturing *Eurytemora*. Natural estuarine water used for the maintenance of stock cultures contains essential components necessary for healthy copepods, however natural water may also contain unwanted microalgæ and predators. Estuarine water should be filtered (0.4μm) or autoclaved prior to use to eliminate chances of biotic contamination. Salinity adjustments can be made with deionized water, hypersaline brine, or a good quality synthetic sea salt such as H-W Marinemix (Hawaiian Marine Imports, Inc., Houston, TX).

13.3 Culture Vessels

Copepods are cultured in 18-L glass aquaria. Larger or smaller culture volumes can be maintained to accommodate individual laboratory needs or constraints. A minimum of two cultures are normally maintained to provide adequate numbers of copepods for testing purposes and provide back-up security in the event that one culture "crashes". Cultures are kept covered to prevent accidental contamination from spills and also to minimize evaporation which results in an increase in culture salinity. Minimal aeration is supplied using 3/16" airline connected to a 1.0 mL glass pipett.

13.4 Salinity, Temperature, and Photoperiod

Eurytemora affinis tolerate a wide salinity and temperature range. Katona (1970) demonstrated the ability of *Eurytemora* to reproduce in temperatures ranging from 2 to 23 °C and salinities from 5 to 33 ppt. The duration of copepod development is affected by temperature-salinity combinations, as observed by Nagarai (1992); however, temperature has a greater influence on development rate. Increasing temperature (at constant salinity) accelerates developmental rate but reduces longevity. For toxicity testing purposes, cultures are maintained at 25 °C and 15 ppt salinity. By culturing at 25 °C and 15 ppt, copepods are acclimated to a standard test temperature and salinity representative of the estuarine environment. Salinity adjustment can be achieved by using a rate increase or

decrease of 2-3 ppt/day. Cultures are protected from direct light with screens or tinted covers. Artificial lighting is controlled to provide a photoperiod of 16 hours light: 8 hours dark.

13.5 Renewal of Culture Water

Culture water is replenished at least once per month for 18L cultures to remove biological wastes (dead algal cells and copepod fecal pellets) as well as adjust the density of copepods. Culture volume is reduced by 75% and renewed with fresh, filtered or autoclaved, salinity adjusted estuarine water. Water and copepods are removed from the cultures using a slow siphon. For 18L cultures, four to five liters of old culture water and copepods are collected and the remaining water is discarded. Culture aquaria are wiped clean with fresh water (without detergent) and dried. Fresh culture water and food are added followed by addition of the previously collected copepods.

13.6 Food and Feeding Regime

Copepods store little energy reserves, therefore food supply has a significant influence on generation time, reproduction, and mortality (Gaedke, 1990). *Eurytemora* feed on phytoplankton, microzooplankton, and detritus. Phytoplankton is directly or indirectly the most important food source. A two-species microalgal diet provides adequate nutrition for sustained healthy cultures of *Eurytemora affinis*. Stock cultures are fed on a diet of *Isochrysis galbana* (Tahitian) and a species of centric diatom such as *Thalassiosira fluviatilis* or *T. pseudonana*. A 50/50 (vol/vol) mixture of the two phytoplankton, each in log-phase growth, is added to copepod cultures three times per week. Algal density within the copepod cultures is maintained at approximately 10^4 cells/ml *Isochrysis* and 10^3 cells/mL *Thalassiosira*.

13.7 Phytoplankton Culture

The algae are cultured using aseptic techniques in order to exclude biotic contaminants. Monocultures of *Isochrysis* and *Thalassiosira* are grown in batch culture in 2.8L Fernbach flasks. Algal cultures are maintained in a temperature controlled room (20-25 °C), with fluorescent lighting (16:8 L:D photoperiod), and vigorous aeration via a sterile cotton-plugged glass pipette. New cultures are initiated every week with a 250mL inoculum, from the previous week's culture, added to 2L of f/2 enrichment medium (Guillard, 1975). The algal culture medium consists of autoclaved (filtered and salinity adjusted) estuarine water with nutrients, trace metals, and vitamins added (Table 1).

13.8 Culture Records

Details on the culture history, daily culture maintenance operations, and phytoplankton cultures are recorded in a laboratory notebook.

Table 1. Algal culture medium (modified f/2) from Guillard (1975).

Major Elements

Stock Solutions	% (W/V)	
$NaNO_3$	7.5	
NaH_2PO_4	0.5	
NH_4Cl	2.65	
Na_2SiO_3	3.0	(Required for diatom)

% (W/V) n grams brought to a volume of 100 mls with de-ionized water.
Use 1.0 mL per liter of estuarine water to obtain f/2 medium

Trace Elements

Primary Stock Solutions	%(W/V)
$CuSO_4\ 5H_2O$	0.98
$CoCl_2\ 6H_2O$	1.05
$Na_2MoO_4\ 2H_2O$	0.63
$ZnSO_4\ 7H_2O$	2.2
$MnCl_2\ 4H_2O$	18.0

Working Stock Solution
Dissolve 3.15g $FeCl_3$ and 4.36g Na_2EDTA in approximately 900 ml de-ionized water. Add 1.0 ml of each trace element primary stock and bring to 1.0 L. Use 1.0 mL of the working stock for each liter of f/2 medium.

Vitamins
Primary Stock Solutions
Biotin 0.1 mg/ml
B_{12} 1.0 mg/ml

Working Stock Solution
Dissolve 20 mg thiamine HCl in 100 ml de-ionized water and add 1.0 ml biotin primary stock and 0.1 ml B_{12} primary stock.
Add 0.5 ml vitamin working stock to each liter f/2 medium

14.0 TOXICITY TEST PROCEDURES

14.1 Experimental Design

Eurytemora bioassays are initiated with copepods of the same developmental stage (within 12-hours in age). Acute tests are started with nauplii or copepedids and chronic tests are started with nauplii (≈ 24-hours old). Four replicates for each test condition (control and various sample dilutions) are recommended to better distinguish differences in biological effects between treatments.Each replicate contains 12 - 16 organisms which are held in chambers suspended in the test solution. Tests are conducted as static, static-renewal, or flow-through. Test organisms are fed daily with a 50/50 algal mixture. Physical and chemical parameters are measured initially and with each renewal of test solution. At the end of the exposure duration, the test solution is lowered (removed by slow siphon) in each replicate and survival is evaluated. Surviving copepods from chronic tests are preserved in formalin. Subsequently, growth (maturation) and fecundity are evaluated. A summary of test conditions is listed in Table 2.

14.2 Range-Finding Test

When the toxicity of an effluent, chemical, or environmental sample is unknown, a range-finding bioassay is performed to determine the concentration series to be used in a definitive test. Groups of copepods are exposed for 24-h to at least three dilutions (1, 10, and 50%, and a control) for effluents. Concentrations should span four orders of magnitude (1, 10, 100, 1000 x/L) for single or multiple chemicals.

14.3 Definitive Test

Toxicity tests usually consist of one control treatment and a series of toxicant dilutions (i.e., 100, 56, 32, 18, 10, and 5.6%). The dilution series is determined by the range-find test. Each dilution, except for the highest concentration and the control, is at least 50% of the next higher one. The control treatment consists of the same dilution water, conditions, procedures, and copepods as are used in the other treatments. For a valid test, average control survival must equal or exceed 80% in acute and chronic tests.

Table 2. Recommended Test Conditions for *Eurytemora affinis.*

1. Temperature[1]:	20 or 25 ± 2 °C
2. Lighting:	100-150 fc
3. Photoperiod:	16 L:8 D
4. Size of Test Vessel:	150 ml Beaker
5. Volume of Test Solution;	100 ml
6. Age of Test Copepods:	≈ 24 hours
7. No. of Copepods per Test Vessel:	12-16
8. No. of Replicates per Concentration:	4
9. Feeding Regime:	Daily Algal Mixture 10^4 cells/ml for *I. galbana* 10^3 cells/ml for *T. Fluviatilis*
10. Aeration:	None, unless DO concentration falls below 40% saturation
11. Dilution Water	Autoclaved Natural Estuarine Water (Salinity Adjusted)
12. Test Duration	Acute Test - 48 or 96 hours Chronic Test - 8 days
13. Effect Measured	Mortality, Fecundity, Maturation

[1] 25 °C should be used for chronic test.

14.4 Test Solutions

The volume of test solution required depends on the dilution series, frequency of renewals, and duration of exposure. Usually, a one liter sample provides enough volume to start a bioassay with six dilutions (100 to 5.6%), four replicates per treatment, and 100 ml per replicate. Physical and chemical parameters are measured with the remainder of the sample. For each renewal (50%), an additional 500 ml are required. Tests should begin as soon as possible, preferably within 24 hours after sample collection. Single chemical stock solutions should be prepared within 24-48 hours of initiating the test. If the persistence of toxicity is not known, the maximum holding time of a sample should not exceed 72 hours. Samples are stored at 4 °C. Immediately prior to starting a bioassay, the sample is warmed to the test temperature (20 or 25 °C) by placing the sample in a warm water bath.

14.5 Obtaining Neonates For Toxicity Tests

Approximately 24 hours prior to starting a bioassay, adult copepods are removed from stock cultures. A 202μm Nitex mesh sieve is passed through the culture numerous times to capture adults. The sieve is removed from the culture (with adult copepods retained) and gently rinsed with dilution water to collect adults in a 1-l beaker containing approximately 750 mL of dilution water. A small volume (10-20 ml) of the two-species algal mixture is added. The beaker is covered and placed out of direct light, without aeration, and at the desired test temperature (20-25 °C).

Within 24 hrs from the time the adult copepods were isolated, nauplii are collected by slowly siphoning the volume of water and copepods from the 1-L beaker through a 202 μm Nitex mesh sieve into another 1-l beaker. The bottom of the beaker is not disturbed while siphoning to reduce the amount of algal cells and fecal pellets in the nauplii collection. The adults are trapped on the mesh while the neonates pass through the mesh. Entrapped adults are rinsed back into stock cultures. Nauplii are then concentrated in a 250 ml polycarbonate jar in which the bottom has been removed and replaced with a 53 μm Nitex mesh.

14.6 Starting the Test

Test beakers (150 ml) are labeled (salinity, concentration, replicate number) and test chambers are suspended in the beakers with plastic coated paperclips. Test solution (100 ml) is added to each beaker. Nauplii are transferred to test chambers by drawing an aliquot of water and nauplii into a fire-polished, wide bore, glass pipette and counting the number of nauplii in the pipette under a dissecting microscope (15 $\times$ magnification). The nauplii are gently expelled into the test

chamber and the number of nauplii within the corresponding test chamber are recorded on data sheets (Figure 5). Several small aliquots are often necessary to introduce 12-16 nauplii to each chamber. The concentration of nauplii in the 250 mL polycarbonate jar is adjusted so that an aliquot contains approximately five organisms. If nauplii are too concentrated, counts under the microscope are difficult and less accurate. If nauplii are not concentrated, too many aliquots are needed and the test solution is diluted.

14.7 Temperature and Photoperiod

Test beakers containing organisms are placed randomly in a biological incubator to control temperature (20 or 25 ± 2 °C) and lighting (100-150 fc). A photoperiod of 16 hour light and 8 hour dark is utilized. Beakers are covered to reduce cross contamination and evaporation.

14.8 Feeding

Eurytemora are fed during acute or chronic testing because copepods store little energy reserves. Test organisms are fed daily after renewals with an equal volume mixture of *Isochrysis* and *Thalassiosira*. Algal density in test beakers is approximately the same as in the *Eurytemora* stock cultures (10^4 *Isochrysis* and 10^3 *Thalassiosira* cells/ml). Cell densities in subsamples from the algal cultures are measured with a Spencer improved Neubauer corpuscle counting chamber (hemacytometer). Algal density is adjusted so that 1.0 ml or less of the algal mixture is added to each test beaker. The volume of algæ mixture added is minimized to avoid diluting the test condition. If algal density is low, the algae is centrifuged and the cells re-suspended in an appropriate volume of the dilution water.

Figure 5. Sample data sheet for *Eurytemora affinis* test survival results.

Test ID:_____
Toxicant:_____
Performed by:_____
Date sample collected:_____
Salinity:_____
Date test began:_____
Date test ended:_____
Dilution water used:_____

Conc./% eff.	Rep.	N_o	N_t	% Survival	Mean ± S.D.
1.	A				
	B				
	C				
	D				
2.	A				
	B				
	C				
	D				
3.	A				
	B				
	C				
	D				
4.	A				
	B				
	C				
	D				
5.	A				
	B				
	C				
	D				
6.	A				
	B				
	C				
	D				
7.	A				
	B				
	C				
	D				

14.9 Physical and Chemical Analysis

The temperature, dissolved oxygen concentration, pH, and salinity are measured in the dilution water and each set of test solutions and recorded (Figure 6). These parameters are measured daily prior to and following renewals by collecting a composite sample from each test condition. The sample is obtained by slowly siphoning test solution from each test beaker (outside the test chamber) into a 100 mL plastic cup. Instruments are calibrated immediately prior to use with fresh buffers and standards.

Aeration during the test may alter the results and should be used only as a last resort to maintain the required DO. Aeration can reduce toxicity of test solutions by stripping them of highly volatile toxic substances, or increase its toxicity by altering pH. However, the DO in the test solution must not be permitted to fall below 4.0 mg/l. If aeration is necessary, air is bubbled through a 1.0 ml pipette at the rate of 100 bubbles/min.

14.10 Terminating the Test

An acute test is terminated after 48 or 96-hours of exposure. A chronic test is terminated after 8-days of exposure. Survival is evaluated by reducing the volume of test solution in each test beaker (using a slow siphon) to approximately 10 mL. The remaining test solution and copepods are removed from the test chamber with a wide-bore glass pipette, examined under a dissecting microscope, and the number of live copepods and corresponding test beaker are recorded.

After all the solution in the test chamber has been removed and surviving copepods counted, the chambers are finally examined under the microscope for the presence of any remaining copepods entrapped on the chamber mesh. If copepods are present, the mesh is rinsed with a squeeze bottle and the remaining copepods are pipetted from the chamber.

Surviving copepods are preserved for maturation and fecundity evaluation in chronic tests. Copepods from each test beaker are preserved in separate 20 mL scintillation vials containing 2.0 mL of 10% buffered formalin. Preserved copepods are examined under a dissecting microscope and categorized as: gravid female; non-gravid female; male; and immature (Figure 7). A gravid female is an adult carrying eggs in an external ovisac. A non-gravid female has the adult female characteristic of wing-like structures on the last segment of the metasome without an external ovisac carried under the urosome. An adult male has the identifying characteristic of a modified right first antenna. Immature *E. affinis* are smaller than either adult males or females and lack the adult characteristics of either a modified right first antenna or wing-like structures on the last segment of the metasome.

Figure 6. Sample data sheet for *Eurytemora affinis* test water quality parameters - Front

Test ID:_____

Toxicant:_____

Performed by:_____

Date sample collected:_____

Date test began:_____

Date test ended:_____

Dilution water used:_____

Salinity (ppt)										Temperature (°C)									
Conc./%EFF	0	24	48	72	96	120	144	168	192	0	24	48	72	96	120	144	168	192	
1.																			
2.																			
3.																			
4.																			
5.																			
6.																			
7.																			

Figure 6. (continued) Sample data sheet for *Eurytemora affinis* test water quality parameters - Back.

Dissolved Oxygen (mg/L)										pH									
Conc./%EFF	0	24	48	72	96	120	144	168	192	0	24	48	72	96	120	144	168	192	
1.																			
2.																			
3.																			
4.																			
5.																			
6.																			
7.																			

Figure 7. Sample data sheet for chronic testing sublethal effects (% Gravid, % Mature) for *Eurytemora affinis* test.

Test ID:_____
Toxicant:_____
Performed by:_____
Date sample collected:_____

Date test began:_____
Date test ended:_____
Dilution water used:_____

Females

% Gravid (# Gravid ♀ Total # ♀)

Immature/ Total Survivors

Conc/% Eff. Rep.	# Gravid	# Not Gravid	# Males ♂	# Immature	Total	%Gravid/Gravid & Not Gravid	% Immature
Control A							
B							
C							
D							
A							
B							
C							
D							
A							
B							
C							
D							
A							
B							
C							
D							

15.0 DATA ANALYSIS

The data are tabulated and summarized. The proportion of surviving copepods, females that are gravid/total females, and copepods that have reached maturity/total surviving copepods, in each replicate is calculated. The endpoints of toxicity are based on the reduction in survival, proportion of gravid females, and proportion of copepods reaching maturity. Previously, reproduction success was evaluated by determining the number of neonates produced by each gravid female 24 hours after terminating the test. This method was abandoned because females are capable of producing more than one brood after a single mating and no significant effects were observed in three years of testing.

The LC50 and 95% confidence interval is calculated by the Spearman-Karber Method, the Trimmed Spearman-Karber Method and the Probit Method. The Spearman-Karber Method (Finney, 1978) requires 0% mortality in the lowest test concentration (not including control) and 100% mortality in the highest test concentration, and at least one condition with partial mortality. The Trimmed Spearman-Karber Method (Hamilton et al., 1977) requires mortalities bracket 50% and at least one concentration with partial mortality. The Probit Method (Finney, 1978) requires mortalities bracket 50% and at least two concentrations with partial mortality.

Determination of the no-observed-effect-concentration (NOEC) and the lowest-observed-effect-concentration (LOEC) for multi-concentration tests is accomplished with hypothesis testing. Survival, reproduction, and maturation data from each concentration are compared to the control values. The NOEC is the lowest concentration that is not significantly different than the control value. The LOEC is the lowest concentration that is statistically different ($p < 0.05$) than the control value. Proportions are transformed by the arc-sine-square-root transformation. This transformation is commonly used on proportionality data to stabilize variance and satisfy the normality requirement for parametric tests. After data are transformed, normality and homogeneity of variance is determined with the Shapiro-Wilks Test and Bartlett's Test, respectively. If the data meet the normality and homogeneity of variance assumptions, Dunnett's Procedure (parametric test) is used to determine significant differences. If, however, the data fail to satisfy the assumptions, Steel's Many-one Rank Test (nonparametric test) is used to determine the NOEC and LOEC. If unequal numbers of replicates occur among the test concentrations, the parametric analysis alternative is the t-test with a Bonferroni adjustment, and the nonparametric analysis alternative is the Wilcoxon Rank Sum Test with the Bonferroni adjustment. A chronic value is determined by calculating the geometric mean of the NOEC and LOEC values. Recently, environmental managers have been utilizing the IC25, the concentration which causes a 25% reduction in survival, growth or reproduction, as a measure of

chronic toxicity (see EPA software - ICPIN Program).

Statistical procedures and calculations for the interpretation of toxicity test data are described in greater detail in U.S.EPA (1991a). Computer programs for analyzing toxicity test data are available by contacting:

Center for Water Quality Monitoring
U.S. Environmental Protection Agency
Environmental Research Laboratory
College Station Road, Athens, Georgia 30613
Telephone: 404-546-3123

and

Fish Physiology and Toxicology Laboratory
Department of Zoology and Physiology
University of Wyoming
Laramie, Wyoming 82071
Telephone: 307-745-8504

16.0 REFERENCES

Allan, S.J. and R.E. Daniels. 1982. Life table evaluation of chronic exposure of *Eurytemora affinis* (Copepoda) to Kepone. Mar. Biol, 66:179-184.

American Society for Testing and Materials (ASTM). 1980. Standard Practice for Conducting Toxicity Tests with Fishes, Macroinvertebrates and Amphibians. ASTM E 729-80, Philadelphia, PA. 25 pp.

Bradley, B.P. 1975. The anomalous influence of salinity on temperature tolerances of summer and water populations of the copepod, *Eurytemora affinis*. Biol. Bull. 148:26-34.

Bushong, S.J., L.W. Hall Jr., W.E. Johnson, W.S. Hall and M.C. Ziegenfuss. 1987. Acute and chronic toxicity of tributyltin to selected Chesapeake Bay fish and invertebrates. Final Report, Johns Hopkins University Applied Physics Laboratory, Shady Side, MD.

Chesapeake Executive Council. 1989. Chesapeake Bay Basinwide Toxics Reduction Strategy. Annapolis, MD.

Daniels, R.E. and J.D. Allan. 1981. Life table evaluation of chronic exposure to a pesticide. Can. J. Fish. Aquat. Sci. 38:485-494.

DeWoskin, R.S. 1984. Good laboratory practice regulations: comparison. Research Triangle Institute, Research Triangle Park, NC. 63pp.

Federal Drug Administration. 1978. Good laboratory practices for non-chemical laboratory studies. Part 58. Federal Register 43(247):60013-60020, December 22, 1978.

Finney, D.J. 1978. Statistical method in biological assay. 3rd edition. Charles Griffin and Co. Ltd., London. 508 pp.

Gaedke, V. 1990. Population dynamics of the calanoid copepods, *Eurytemora affinis* and *Acartia tonsa* in the Ems-Dollart Estuary: A numerical simulation. Arch. Hydrobiol. 118:185-226.

Guillard, R.R.L. 1975. Culture of Phytoplankton for Feeding Marine Invertebrates. In: Culture of Marine Invertebrate Animals. W.L. Smith and M.H. Chanley (eds.), pp. 29-60. Pleum Publishing, New York, NY.

Gurney, R. 1931. *Eurytemora affinis*. In: British Freshwater Copepoda. R. Gurney

(ed.), pp. 202-214. Ray Society, London, England.

Hall, L.W. Jr., M.C. Ziegenfuss, R.D. Anderson, T.D. Spittler and H.C. Leichtweis. 1994. Influence of salinity on atrazine toxicity to a Chesapeake Bay copepod (*Eurytemora affinis*) and fish (*Cyprinodon variegatus*). Estuaries 17:181-186.

Hall, L.W. Jr., M.C. Ziegenfuss, S.A. Fischer, R.W. Alden, E. Deaver, J. Gooch and N. Debert-Hastings. 1991. A pilot study for ambient toxicity testing in Chesapeake Bay. Vol. 1, Year 1 Report. U.S. EPA Chesapeake Bay Program Office, Annapolis, MD.

Hamilton, M.A., R.C. Russo, and R.V. Thurston. 1977. Trimmed Spearman-Karber method for estimating median lethal concentrations. Environ. Sci. Tech., 11:714-719.

Heinle, D.R. 1969. Culture of calanoid copepods in synthetic seawater. J. Fish. Res. Bd. Can. 26:150-153.

Jeffries, H.P. 1962. Succession of two *Acartia* species in estuaries. Limnol. Oceanogr. 7:354-364.

Katona, S.K. 1970. Growth characteristics of the copepods, *Eurytemora affinis* and *E. herdmani* in laboratory cultures. Helgolandes wiss. Meesesunters 20:373-384.

Mori, T. 1964. The pelagic Copepoda from the neighboring waters of Japan. 150 pp., 80 pl.

Nagaraj, M. 1982. Combined effects of temperature and salinity on the development of the copepod, *Eurytemora affinis*. Aquaculture 103:65-71.

Sullivan, B.K., E. Buskey, D.C. Milles and P.J. Ritacco. 1983. Effects of copper and cadmium on growth, swimming and predator avoidance in *Eurytemora affinis* (Copepoda). Mar. Biol. 77:299-306.

Taylor, J.K. 1987. Quality assurance of chemical measurements. Lewis Publishers, Inc., Chelsea, MI.

Tepper, B. 1986. Genetic correlations in natural populations of the copepod, *Eurytemora affinis*. Ph.D. Thesis, University of Maryland, College Park, MD.

United States Environmental Protection Agency (U.S. EPA). 1975. Methods for acute toxicity tests with fish, macroinvertebrates and amphibians. Environmental

Research Laboratory, U.S. Environmental Protection Agency, Duluth, MN.

United States Environmental Protection Agency (U.S. EPA). 1977. Occupational health and safety manual. Office of Planning and Management. U.S. Environmental Protection Agency, Washington, DC.

United States Environmental Protection Agency (U.S. EPA). 1979a. Handbook for analytical quality assurance in water and wastewater laboratories. U.S. Environmental Protection Agency, Environmental Monitoring and Support Laboratory, EPA/600/4-79-019. Cincinnati, OH.

United States Environmental Protection Agency (U.S. EPA). 1979b. Methods for the chemical analysis of water and wastes. Environmental monitoring and support laboratory. U.S. Environmental Protection Agency, EPA/600/4-79-020, Cincinnati, OH.

United States Environmental Protection Agency (U.S. EPA). 1980a. Proposed good laboratory practice guidelines for toxicity testing. Paragraph 163.60-6. Federal Register 45:26377-26382, April, 18, 1980.

United States Environmental Protection Agency (U.S. EPA). 1980b. Physical, chemical, persistence and ecological effects testing; good laboratory practice standards (proposed rule). 40 CFR 772. Federal Register 45:77353-77365, November 21, 1980.

United States Environmental Protection Agency (U.S. EPA). 1985. Methods for Measuring the Acute Toxicity of Effluents to Freshwater and Marine Organisms. W.H. Peltier and C.I. Weber (eds.). EPA/600-4-85/013, Washington, DC.

United States Environmental Protection Agency (U.S. EPA). 1991a. Methods for Measuring the Acute Toxicity of Effluents and Receiving Waters to Freshwater and Marine Organisms. C.I. Weber (ed.). U.S. Environmental Protection Agency, EPA/600/4-9-027. Cincinnati, OH.

United States Environmental Protection Agency (U.S. EPA). 1991b. Technical support document for water quality-based toxics control. Office, Water, U.S. Environmental Protection Agency, EPA/505/2-90-001. Washington, DC.

Waters, D.B. and C.W. Jameson. 1984. Health and safety or toxicity testing. Butterworth Publishers, Woburn, MA.

Wilson, M.S. and H.C. Yeatman. 1959. Free-living Copepoda, In: Freshwater Biology. W.T. Edmondson (ed.), pp. 795-861. John Wiley and Sons, New York,

NY.

Ziegenfuss, M.C. and L.W. Hall, Jr. 1993. Screening of candidate species for development of standard operating procedures for aquatic toxicity testing with resident Chesapeake Bay biota. Report. Maryland Department of the Environment, Baltimore, MD.

APPENDIX A

SUMMARY OF *EURYTEMORA AFFINIS* CONTROL SURVIVAL DURING ACUTE AND CHRONIC TOXICITY TESTING OVER A FOUR-YEAR PERIOD.

Date	Control Survival %	Duration	Water Source	Salinity ppt	Temp °C
Aug 1990	100	8-d	Synthetic	15	25
Sept 1990	92	8-d	Synthetic	15	25
Aug 1990	69	48-h	Synthetic	15	25
Dec 1990	45	8-d	Synthetic	15	25
Dec 1990	70	8-d	Estuarine	15	25
Dec 1990	92	8-d	Estuarine	15	25
Aug 1991	78	48-h	Synthetic	15	25
Aug 1991	90	8-d	Synthetic	15	25
Sept 1991	93	8-d	Synthetic	15	25
Apr 1992	77	96-h	Estuarine	5	20
Apr 1992	40	96-h	Estuarine	15	20
Apr 1992	95	96-h	Estuarine	25	20
Apr 1992	96	96-h	Estuarine	25	20
Apr 1992	68	96-h	Estuarine	5	20
June 1992	97	96-h	Estuarine	15	20
June 1992	94	96-h	Estuarine	25	20
July 1992	78	96-h	Estuarine	5	20
July 1992	88	96-h	Estuarine	15	20
Nov 1992	86	48-h	Estuarine	15	25
Oct 1992	19	8-d	Estuarine	15	25
Dec 1992	98	8-d	Estuarine	5	25
Dec 1992	86	8-d	Estuarine	15	25
Apr 1993	81	8-d	Estuarine	15	25
Oct 1993	53	96-h	Estuarine	15	25
Oct 1993	88	96-h	Estuarine	25	25
Oct 1993	92	96-h	Estuarine	5	25
Oct 1993	58	96-h	Estuarine	25	25
Nov 1993	97	96-h	Estuarine	15	25
Dec 1993	90	96-h	Estuarine	25	25
Jan 1994	83	8-d	Estuarine	5	25
Feb 1994	90	8-d	Estuarine	5	25
Mar 1994	90	8-d	Estuarine	5	25
Mar 1994	78	8-d	Estuarine	15	25
Mar 1994	75	8-d	Estuarine	25	25
June 1994	92	96-h	Estuarine	5	25
June 1994	97	96-h	Estuarine	15	25
June 1994	80	96-h	Estuarine	25	25
Sept 1994	82	48-h	Estuarine	15	25
Oct 1994	93	8-d	Estuarine	15	25

Mean % control survival: 96-h = 82, 8-d = 86

APPENDIX B
SUMMARY OF *E. AFFINIS* CHRONIC ENDPOINTS REPRODUCTION (FECUNDITY) AND GROWTH (MATURATION) EVALUATED UNDER CONTROL CONDITIONS FROM 8 DAY TESTS.

Date	Control		Water Source	Salinity	Temperature
	Gravid Females, ♀ Mean %	Immatures Mean %		ppt	°C
Jan 1994	82	7	Estuarine	5	25
Feb 1994	83	3	Estuarine	5	25
Mar 1994	89	3	Estuarine	5	25
Mar 1994	6	37	Estuarine	15	25
Mar 1994	13	40	Estuarine	25	25
Oct 1994	97	7	Estuarine	15	25

APPENDIX C

SINGLE LABORATORY PRECISION OF THE *EURYTEMORA AFFINIS* ESTUARINE TOXICITY TEST AT 15 PPT SALINITY WITH THE REFERENCE TOXICANT CADMIUM CHLORIDE.

Test	48-h LC50 Cd Cl_2 (μg/L)	95% Conf. Interval
1.	98	67 - 144
2.	113	72 - 177
3.	143	111 - 184
	Mean: 118	
	Standard Deviation: 22.9	
	Coeff. Variation: 19.4%	

APPENDIX D

RELATIVE SENSITIVITY OF *EURYTEMORA AFFINIS* TO SELECTED TOXIC SUBSTANCES.

Copper	96-h LC50 = 30 μg/L (Adult)	(Sullivan et al., 1983)
Dieldrin	48-h LC50 = 23 μg/L (Napulii)	(Daniels & Allan, 1981)
TBT	48-h LC50 = 1.4 μg/L (Subadult)	(Bushong et al., 1988)
Kepone	48-h LC50 = 40 μg/L (Nauplii)	(Allan & Daniels, 1982)
Atrazine	96-h LC50 = 0.5-13.2 mg/L (Nauplii)	(Hall et al., 1994)