ENVIRONMENTAL PROTECTION AGENCY PERFORMANCE TEST METHODS

U.S. ENVIRONMENTAL PROTECTION AGENCY
OFFICE OF ENFORCEMENT
OFFICE OF GENERAL ENFORCEMENT
WASHINGTON, D.C. 20460

EPA-340/1-78-011

ENVIRONMENTAL PROTECTION AGENCY PERFORMANCE TEST METHODS

Parts I and II

by

PEDCo Environmental, Inc.
11499 Chester Road
Cincinnati, Ohio 45246

Prepared for

U.S. ENVIRONMENTAL PROTECTION AGENCY
Division of Stationary Source Enforcement
Office of Enforcement
Washington, DC 20460

August 1, 1978

STATIONARY SOURCE ENFORCEMENT SERIES

The Stationary Source Enforcement series of reports is issued by the Office of General Enforcement, Environmental Protection Agency, to assist the Regional Offices in activities related to enforcement of implementation plans, new source emission standards, and hazardous emission standards to be developed under the Clean Air Act. Copies of Stationary Source Enforcement reports are available - as supplies permit - from the U.S. Environmental Protection Agency, Office of Administration, Library Services, MD-35, Research Triangle Park, North Carolina 27711, or may be obtained, for a nominal cost, from the National Technical Information Service, 5285 Port Royal Road, Springfield, Virginia 22161.

FOREWORD

This packet is part of a series of emission testing related material that has been supplied to Federal, State and local agencies by the Division of Stationary Source Enforcement of the Environmental Protection Agency to enable the field enforcement staff to keep informed of current methods development and publications.

Reference Methods 1 through 8 of the New Source Performance Standards were revised and republished in the Federal Register on August 18, 1977 with subsequent revisions published on January 10, 1978. However, due to the nature of the Federal Register, print size and figures must be reduced and many procedures referenced or implied in an effort to reduce the number of pages. This reduced size makes it extremely difficult to set up and continually use the actual Federal Register pages as a field test manual.

To enable the field enforcement staff to develop and maintain a current field testing manual, an updated, double spaced, typed version of Reference Methods 1 through 8 (Part 1) and field data sheets (Part II) are provided in this packet. Additional material will be provided as it is developed and published.

TABLE OF CONTENTS

	Page
PART I - REFERENCE METHODS	
Method 1 - Sample and Velocity Traverses for Stationary Sources	I-1
Method 2 - Determination of Stack Gas Velocity and Volumetric Flow Rate	I-13
Method 3 - Gas Analysis for Carbon Dioxide, Excess Air, and Dry Molecular Weight	I-45
Method 4 - Determination of Moisture in Stack Gases	I-61
Method 5 - Determination of Particulate Emissions from Stationary Sources	I-79
Method 6 - Determination of Sulfur Dioxide Emissions from Stationary Sources	I-119
Method 7 - Determination of Nitrogen Oxide Emissions from Stationary Sources	I-135
Method 8 - Determination of Sulfuric Acid Mist and Sulfur Dioxide Emissions from Stationary Sources	I-151
PART II - EMISSION TESTING DATA SHEETS	
Sample Point Location	II-1
Gas Velocity and Cyclonic Flow Determination	II-2
Pitot Tube Calibration	II-3
Integrated Bag Sample	II-4
Orsat Analysis	II-5
Method 4 - Field Sample and Recovery	II-6
Method 5 - Field Sample	II-7
Method 5 - Recovery and Integrity	II-8
Method 5 - Blank Analysis	II-9
Method 5 - Sample Analysis	II-10

TABLE OF CONTENTS (Continued)

	Page
Nozzle Calibration	II-11
Dry Gas Meter Calibration	II-12
Dry Gas Meter Post-Test Check	II-13
Stack Temperature Sensor Calibration	II-14
Method 6 - Field Sample	II-15
Method 6 - Recovery and Integrity	II-16
Method 6 - Sample Analysis	II-17
Method 7 - Field Sample	II-18
Method 7 - Recovery and Integrity	II-19
Method 7 - Sample Analysis	II-20
Spectrophotometer Optimum Wave Length	II-21
Method 8 - Field Sample	II-22
Method 8 - Recovery and Integrity	II-23
Method 8 - Sample Analysis	II-24
Example Sample Label	II-25

REFERENCE METHODS

1 THROUGH 8

PART 1

SAMPLE AND VELOCITY TRAVERSES FOR STATIONARY SOURCES

METHOD 1

METHOD 1--SAMPLE AND VELOCITY TRAVERSES FOR STATIONARY SOURCES

1. Principle and Applicability

1.1 Principle. To aid in the representative measurement of pollutant emissions and/or total volumetric flow rate from a stationary source, a measurement site where the effluent stream is flowing in a known direction is selected, and the cross-section of the stack is divided into a number of equal areas. A traverse point is then located within each of these equal areas.

1.2 Applicability. This method is applicable to flowing gas streams in ducts, stacks, and flues. The method cannot be used when: (1) flow is cyclonic or swirling (see Section 2.4), (2) a stack is smaller than about 0.30 meter (12 in.) in diameter, or 0.071 m^2 (113 $in.^2$) in cross-sectional area, or (3) the measurement site is less than two stack or duct diameters downstream or less than a half diameter upstream from a flow disturbance.

The requirements of this method must be considered before construction of a new facility from which emissions will be measured; failure to do so may require subsequent alterations to the stack or deviation from the standard procedure. Cases involving variants are subject to approval by the Administrator, U.S. Environmental Protection Agency.

2. Procedure

2.1 Selection of Measurement Site. Sampling or velocity measurement is performed at a site located at least eight stack or duct

diameters downstream and two diameters upstream from any flow disturbance such as a bend, expansion, or contraction in the stack, or from a visible flame. If necessary, an alternative location may be selected, at a position at least two stack or duct diameters downstream and a half diameter upstream from any flow disturbance. For a rectangular cross section, an equivalent diameter (D_e) shall be calculated from the following equation, to determine the upstream and downstream distances:

$$D_e = \frac{2LW}{L + W}$$

where L = length and W = width.

2.2 Determining the Number of Traverse Points.

2.2.1 Particulate Traverses. When the eight- and two-diameter criterion can be met, the minimum number of traverse points shall be: (1) twelve, for circular or rectangular stacks with diameters (or equivalent diameters) greater than 0.61 meter (24 in.); (2) eight, for circular stacks with diameters between 0.30 and 0.61 meter (12-24 in.); and (3) nine, for rectangular stacks with equivalent diameters between 0.30 and 0.61 meter (12-24 in.).

When the eight- and two-diameter criterion cannot be met, the minimum number of traverse points is determined from Figure 1-1. Before referring to the figure, however, determine the distances from the chosen measurement site to the nearest upstream and downstream disturbances, and divide each distance by the stack diameter or equivalent diameter, to determine the distance in terms of the number of duct diameters. Then, determine from Figure 1-1 the minimum number

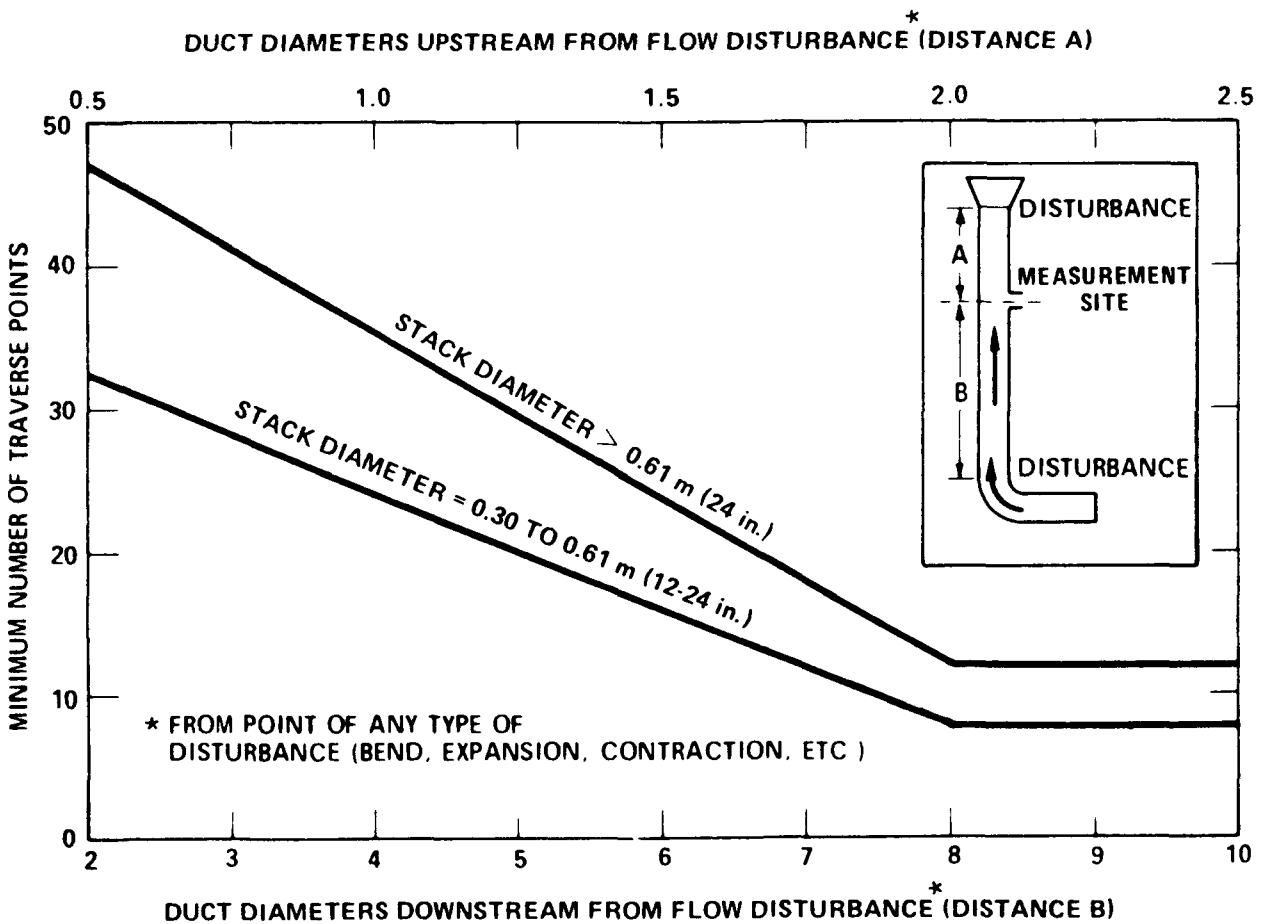

Figure 1-1. Minimum number of traverse points for particulate traverses.

of traverse points that corresponds: (1) to the number of duct diameters upstream; and (2) to the number of diameters downstream. Select the higher of the two minimum numbers of traverse points, or a greater value, so that for circular stacks the number is a multiple of 4, and for rectangular stacks, the number is one of those shown in Table 1-1.

Table 1-1. CROSS-SECTIONAL LAYOUT FOR RECTANGULAR STACKS

No. of traverse points	Matrix layout
9	3 x 3
12	4 x 3
16	4 x 4
20	5 x 4
25	5 x 5
30	6 x 5
36	6 x 6
42	7 x 6
49	7 x 7

2.2.2 Velocity (Non-Particulate) Traverses. When velocity or volumetric flow rate is to be determined (but not particulate matter), the same procedure as that for particulate traverses (Section 2.2.1) is followed, except that Figure 1-2 may be used instead of Figure 1-1.

2.3 Cross-Sectional Layout and Location of Traverse Points.

2.3.1 Circular Stacks. Locate the traverse points on two perpendicular diameters according to Table 1-2 and the example shown in Figure 1-3. Any equation (for examples, see Citations 2 and 3 in the

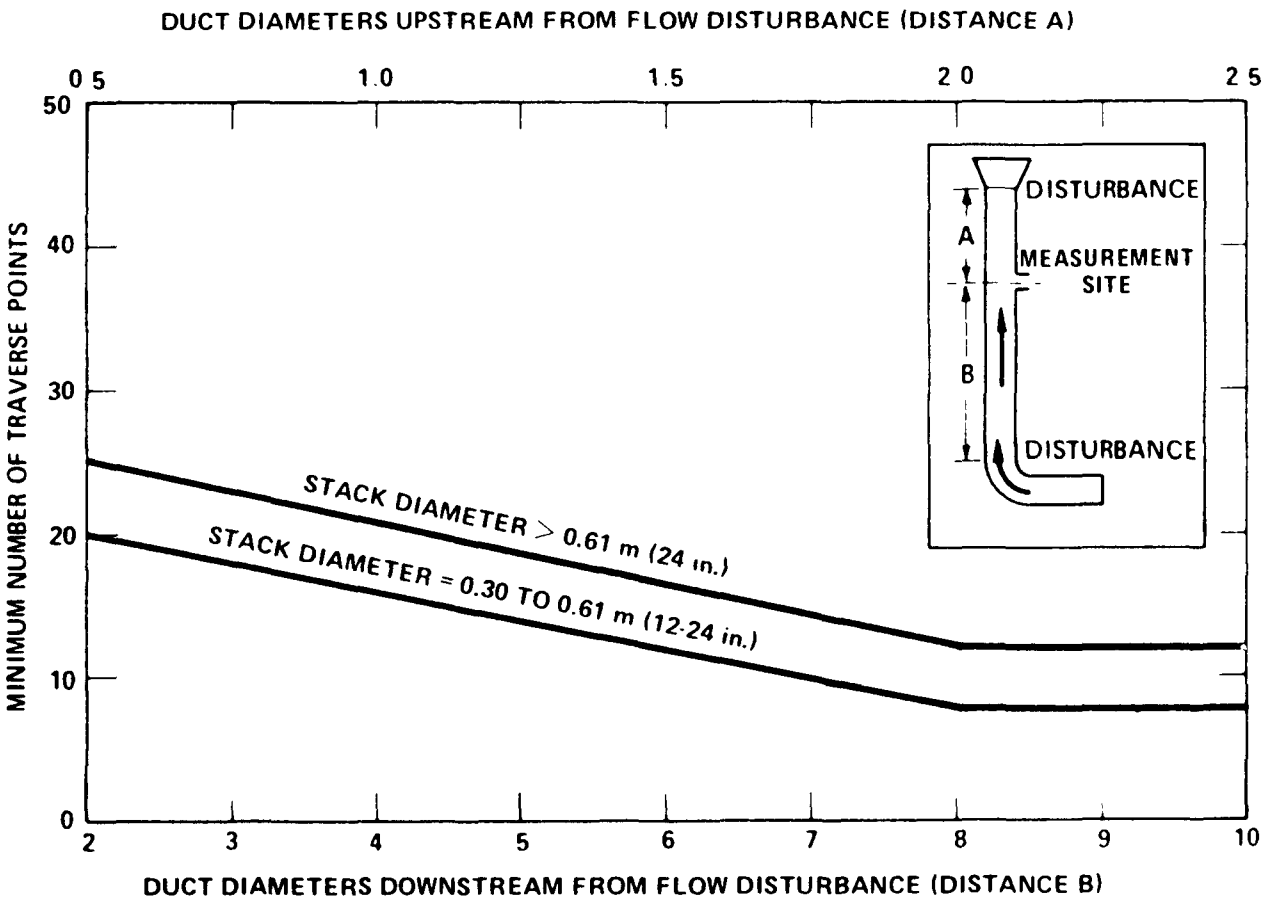

Figure 1-2. Minimum number of traverse points for velocity (nonparticulate) traverses.

TRAVERSE POINT	DISTANCE, % of diameter
1	4.4
2	14.7
3	29.5
4	70.5
5	85.3
6	95.6

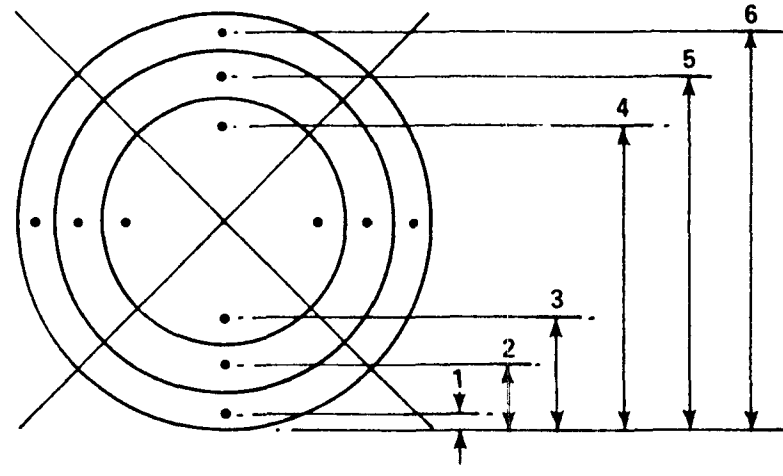

Figure 1-3. Example showing circular stack cross section divided into 12 equal areas, with location of traverse points indicated.

Table 1-2. LOCATION OF TRAVERSE POINTS IN CIRCULAR STACKS
(Percent of stack diameter from inside wall to traverse point)

Traverse point number on a diameter	Number of traverse points on a diameter											
	2	4	6	8	10	12	14	16	18	20	22	24
1	14.6	6.7	4.4	3.2	2.6	2.1	1.8	1.6	1.4	1.3	1.1	1.1
2	85.4	25.0	14.6	10.5	8.2	6.7	5.7	4.9	4.4	3.9	3.5	3.2
3		75.0	29.6	19.4	14.6	11.8	9.9	8.5	7.5	6.7	6.0	5.5
4		93.3	70.4	32.3	22.6	17.7	14.6	12.5	10.9	9.7	8.7	7.9
5			85.4	67.7	34.2	25.0	20.1	16.9	14.6	12.9	11.6	10.5
6			95.6	80.6	65.8	35.6	26.9	22.0	18.8	16.5	14.6	13.2
7				89.5	77.4	64.4	36.6	28.3	23.6	20.4	18.0	16.1
8				96.8	85.4	75.0	63.4	37.5	29.6	25.0	21.8	19.4
9					91.8	82.3	73.1	62.5	38.2	30.6	26.2	23.0
10					97.4	88.2	79.9	71.7	61.8	38.8	31.5	27.2
11						93.3	85.4	78.0	70.4	61.2	39.3	32.3
12						97.9	90.1	83.1	76.4	69.4	60.7	39.8
13							94.3	87.5	81.2	75.0	68.5	60.2
14							98.2	91.5	85.4	79.6	73.8	67.7
15								95.1	89.1	83.5	78.2	72.8
16								98.4	92.5	87.1	82.0	77.0
17									95.6	90.3	85.4	80.6
18									98.6	93.3	88.4	83.9
19										96.1	91.3	86.8
20										98.7	94.0	89.5
21											96.5	92.1
22											98.9	94.5
23												96.8
24												98.9

Bibliography) that gives the same values as those in Table 1-2 may be used in lieu of Table 1-2.

For particulate traverses, one of the diameters must be in a plane containing the greatest expected concentration variation, e.g., after bends, one diameter shall be in the plane of the bend. This requirement becomes less critical as the distance from the disturbance increases; therefore, other diameter locations may be used, subject to approval of the Administrator.

In addition, for stacks having diameters greater than 0.61 m (24 in.) no traverse points shall be located within 2.5 centimeters (1.00 in.) of the stack walls; and for stack diameters equal to or less than 0.61 m (24 in.), no traverse points shall be located within 1.3 cm (0.50 in.) of the stack walls. To meet these criteria, observe the procedures given below.

2.3.1.1 Stacks With Diameters Greater Than 0.61 m (24 in.). When any of the traverse points as located in Section 2.3.1 fall within 2.5 cm (1.00 in.) of the stack walls, relocate them away from the stack walls to: (1) a distance of 2.5 cm (1.00 in.); or (2) a distance equal to the nozzle inside diameter, whichever is larger. These relocated traverse points (on each end of a diameter) shall be the "adjusted" traverse points.

Whenever two successive traverse points are combined to form a single adjusted traverse point, treat the adjusted point as two separate traverse points, both in the sampling (or velocity measurement) procedure, and in recording the data.

2.3.1.2 Stacks With Diameters Equal to or Less Than 0.61 m (24 in.). Follow the procedure in Section 2.3.1.1, noting only that any "adjusted" points should be relocated away from the stack walls to: (1) a distance of 1.3 cm (0.50 in.); or (2) a distance equal to the nozzle inside diameter, whichever is larger.

2.3.2 Rectangular Stacks. Determine the number of traverse points as explained in Sections 2.1 and 2.2 of this method. From Table 1-1, determine the grid configuration. Divide the stack cross-section into as many equal rectangular elemental areas as traverse points, and then locate a traverse point at the centroid of each equal area according to the example in Figure 1-4.

If the tester desires to use more than the minimum number of traverse points, expand the "minimum number of traverse points" matrix (see Table 1-1) by adding the extra traverse points along one or the other or both legs of the matrix; the final matrix need not be balanced. For example, if a 4 x 3 "minimum number of points" matrix were expanded to 36 points, the final matrix could be 9 x 4 or 12 x 3, and would not necessarily have to be 6 x 6. After constructing the final matrix, divide the stack cross-section into as many equal rectangular, elemental areas as traverse points, and locate a traverse point at the centroid of each equal area.

The situation of traverse points being too close to the stack walls is not expected to arise with rectangular stacks. If this problem should ever arise, the Administrator must be contacted for resolution of the matter.

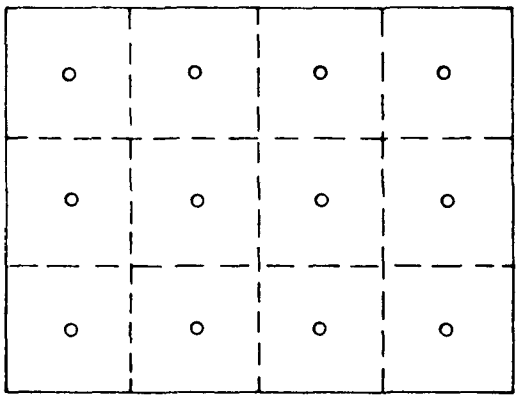

Figure 1-4. Example showing rectangular stack cross section divided into 12 equal areas, with a traverse point at centroid of each area.

2.4 Verification of Absence of Cyclonic Flow. In most stationary sources, the direction of stack gas flow is essentially parallel to the stack walls. However, cyclonic flow may exist (1) after such devices as cyclones and inertial demisters following venturi scrubbers, or (2) in stacks having tangential inlets or other duct configurations which tend to induce swirling; in these instances, the presence or absence of cyclonic flow at the sampling location must be determined. The following techniques are acceptable for this determination.

Level and zero the manometer. Connect a Type S pitot tube to the manometer. Position the Type S pitot tube at each traverse point, in succession, so that the planes of the face openings of the pitot tube are perpendicular to the stack cross-sectional plane: when the Type S pitot tube is in this position, it is at "0° reference." Note the differential pressure (Δp) reading at each traverse point. If a null (zero) pitot reading is obtained at 0° reference at a given traverse point, an acceptable flow condition exists at that point. If the pitot reading is not zero at 0° reference, rotate the pitot tube (up to $\pm 90°$ yaw angle), until a null reading is obtained. Carefully determine and record the value of the rotation angle (α) to the nearest degree. After the null technique has been applied at each traverse point, calculate the average of the absolute values of α; assign α values of 0° to those points for which no rotation was required, and include these in the overall average. If the average value of α is greater than 10°, the overall flow condition in the stack is unacceptable and alternative methodology, subject to the approval of the Administrator, must be used to perform accurate sample and velocity traverses.

3. Bibliography

1. Determining Dust Concentration in a Gas Stream. ASME. Performance Test Code No. 27. New York. 1957.

2. Devorkin, Howard, et al. Air Pollution Source Testing Manual. Air Pollution Control District. Los Angeles, CA. November 1963.

3. Methods for Determination of Velocity, Volume, Dust and Mist Content of Gases. Western Precipitation Division of Joy Manufacturing Co. Los Angeles, CA. Bulletin WP-50. 1968.

4. Standard Method for Sampling Stacks for Particulate Matter. In: 1971 Book of ASTM Standards, Part 23. ASTM Designation D-2928-71. Philadelphia, PA. 1971.

5. Hanson, H. A., et al. Particulate Sampling Strategies for Large Power Plants Including Nonuniform Flow. USEPA, ORD, ESRL, Research Triangle Park, N.C. EPA-600/2-76-170. June 1976.

6. Entropy Environmentalists, Inc. Determination of the Optimum Number of Sampling Points: An Analysis of Method 1 Criteria. Environmental Protection Agency. Reserch Triangle Park, N. C. EPA Contract No. 68-01-3172, Task 7.

DETERMINATION OF STACK GAS VELOCITY AND VOLUMETRIC FLOW RATE (TYPE S PITOT TUBE)

METHOD 2

METHOD 2--DETERMINATION OF STACK GAS VELOCITY AND VOLUMETRIC FLOW RATE (TYPE S PITOT TUBE)

1. Principle and Applicability

1.1 Principle. The average gas velocity in a stack is determined from the gas density and from measurement of the average velocity head with a Type S (Stausscheibe or reverse type) pitot tube.

1.2 Applicability. This method is applicable for measurement of the average velocity of a gas stream and for quantifying gas flow.

This procedure is not applicable at measurement sites which fail to meet the criteria of Method 1, Section 2.1. Also, the method cannot be used for direct measurement in cyclonic or swirling gas streams; Section 2.4 of Method 1 shows how to determine cyclonic or swirling flow conditions. When unacceptable conditions exist, alternative procedures, subject to the approval of the Administrator, U. S. Environmental Protection Agency, must be employed to make accurate flow rate determinations; examples of such alternative procedures are: (1) to install straightening vanes; (2) to calculate the total volumetric flow rate stoichiometrically, or (3) to move to another measurement site at which the flow is acceptable.

2. Apparatus

Specifications for the apparatus are given below. Any other apparatus that has been demonstrated (subject to approval of the Administrator) to be capable of meeting the specifications will be considered acceptable.

2.1 Type S Pitot Tube. The Type S pitot tube (Figure 2-1) shall be made of metal tubing (e.g., stainless steel). It is recommended that the external tubing diameter (dimension D_t, Figure 2-2b) be

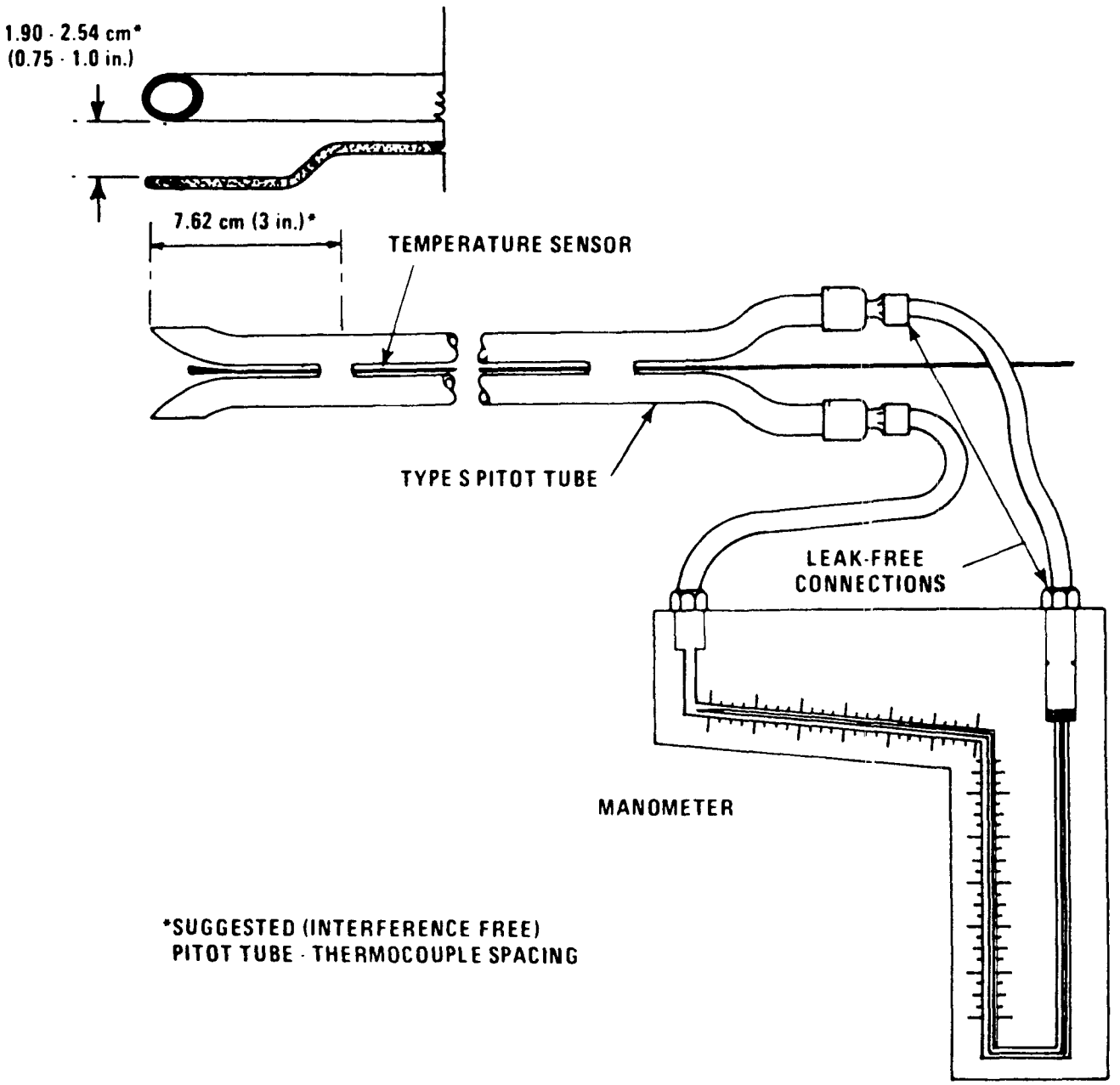

Figure 2-1. Type S pitot tube manometer assembly.

between 0.48 and 0.95 centimeters (3/16 and 3/8 inch). There shall be an equal distance from the base of each leg of the pitot tube to its face-opening plane (dimensions P_A and P_B, Figure 2-2b); it is recommended that this distance be between 1.05 and 1.50 times the external tubing diameter. The face openings of the pitot tube shall, preferably, be aligned as shown in Figure 2-2; however, slight misalignments of the openings are permissible (see Figure 2-3).

The Type S pitot tube shall have a known coefficient, determined as outlined in Section 4. An identification number shall be assigned to the pitot tube; this number shall be permanently marked or engraved on the body of the tube.

A standard pitot tube may be used instead of a Type S, provided that it meets the specifications of Sections 2.7 and 4.2; note, however, that the static and impact pressure holes of standard pitot tubes are susceptible to plugging in particulate-laden gas streams. Therefore, whenever a standard pitot tube is used to perform a traverse, adequate proof must be furnished that the openings of the pitot tube have not plugged up during the traverse period; this can be done by taking a velocity head (Δp) reading at the final traverse point, cleaning out the impact and static holes of the standard pitot tube by "back-purging" with pressurized air, and then taking another Δp reading. If the Δp readings made before and after the air purge are the same (± 5 percent), the traverse is acceptable. Otherwise, reject the run. Note that if Δp at the final traverse point is unsuitably low, another point may be selected. If "back-purging" at regular intervals

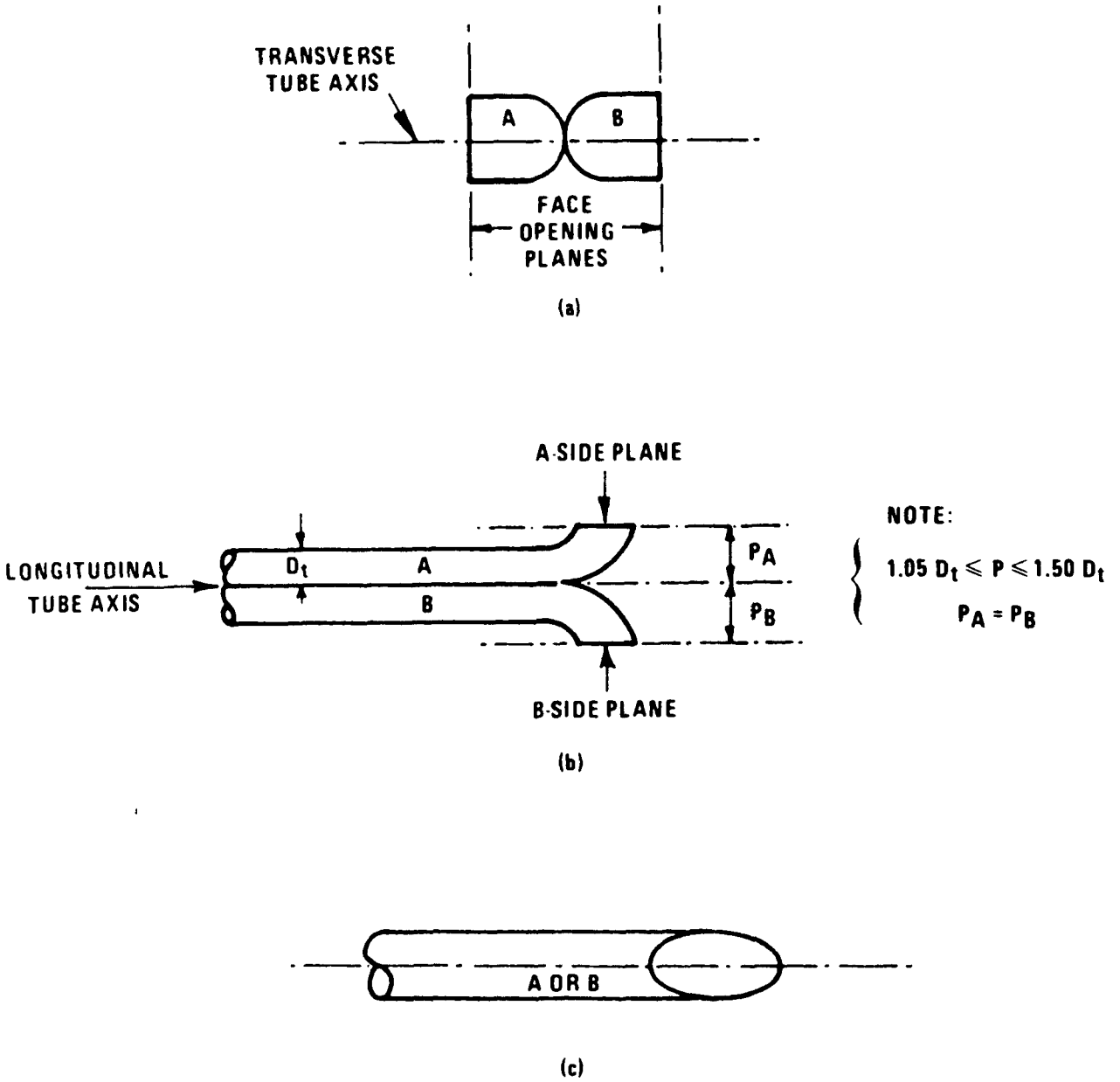

Figure 2-2. Properly constructed Type S pitot tube, shown in: (a) end view; face opening planes perpendicular to transverse axis; (b) top view; face opening planes parallel to longitudinal axis; (c) side view; both legs of equal length and centerlines coincident, when viewed from both sides. Baseline coefficient values of 0.84 may be assigned to pitot tubes constructed this way.

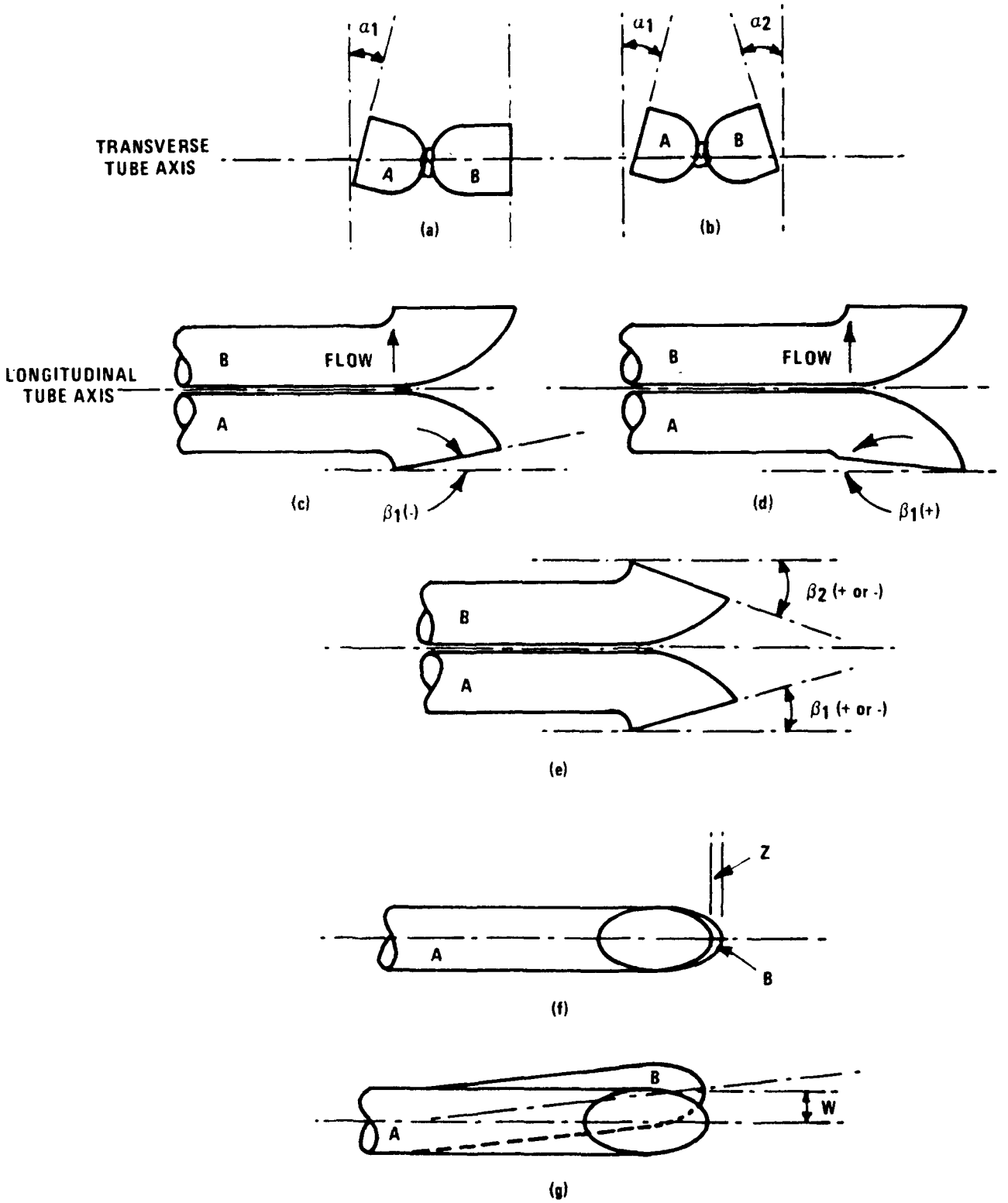

Figure 2-3. Types of face-opening misalignment that can result from field use or improper construction of Type S pitot tubes. These will not affect the baseline value of $\bar{C}p(s)$ so long as α_1 and $\alpha_2 < 10^o$, β_1 and $\beta_2 < 5^o$, $z < 0.32$ cm (1/8 in.) and $w <$ 0.08 cm (1/32 in.) (citation 11 in Section 6).

is part of the procedure, then comparative Δp readings shall be taken, as above, for the last two back purges at which suitably high Δp readings are observed.

2.2 Differential Pressure Gauge. An inclined manometer or equivalent device is used. Most sampling trains are equipped with a 10-in. (water column) inclined-vertical manometer, having 0.01-in. H_2O divisions on the 0- to 1-in. inclined scale, and 0.1-in. H_2O divisions on the 1- to 10-in. vertical scale. This type of manometer (or other gauge of equivalent sensitivity) is satisfactory for the measurement of Δp values as low as 1.3 mm (0.05 in.) H_2O. However, a differential pressure gauge of greater sensitivity shall be used (subject to the approval of the Administrator), if any of the following is found to be true: (1) the arithmetic average of all Δp readings at the traverse points in the stack is less than 1.3 mm (0.05 in.) H_2O; (2) for traverses of 12 or more points, more than 10 percent of the individual Δp readings are below 1.3 mm (0.05 in.) H_2O; (3) for traverses of fewer than 12 points, more than one Δp reading is below 1.3 mm (0.05 in.) H_2O. Citation 18 in Section 6 describes commercially available instrumentation for the measurement of low-range gas velocities.

As an alternative to criteria (1) through (3) above, the following calculation may be performed to determine the necessity of using a more sensitive differential pressure gauge:

$$T = \frac{\sum_{i=1}^{n} \sqrt{\Delta p_i + K}}{\sum_{i=1}^{n} \sqrt{\Delta p_i}}$$

where:

Δp_i = Individual velocity head reading at a traverse point, mm H_2O (in. H_2O)

n = Total number of traverse points

K = 0.13 mm H_2O when metric units are used and 0.005 in. H_2O when English units are used

If T is greater than 1.05, the velocity head data are unacceptable and a more sensitive differential pressure gauge must be used.

Note: If differential pressure gauges other than inclined manometers are used (e.g., magnehelic gauges), their calibration must be checked after each test series. To check the calibration of a differential pressure gauge, compare Δp readings of the gauge with those of a gauge-oil manometer at a minimum of three points, approximately representing the range of Δp values in the stack. If, at each point, the values of Δp as read by the differential pressure gauge and gauge-oil manometer agree to within 5 percent, the differential pressure gauge shall be considered to be in proper calibration. Otherwise, the test series shall either be voided, or procedures to adjust the measured Δp values and final results shall be used, subject to the approval of the Administrator.

2.3 Temperature Gauge. A thermocouple, liquid-filled bulb thermometer, bimetallic thermometer, mercury-in-glass thermometer, or other gauge capable of measuring temperature to within 1.5 percent of the minimum absolute stack temperature shall be used. The temperature gauge shall be attached to the pitot tube such that the sensor tip does not touch any metal; the gauge shall be in an interference-free arrangement with respect to the pitot tube face openings (see Figure 2-1 and also Figure 2-7 in Section 4). Alternate positions may be used if the pitot tube-temperature gauge system is calibrated according to the procedure

of Section 4. Provided that a difference of not more than 1 percent in the average velocity measurement is introduced, the temperature gauge need not be attached to the pitot tube; this alternative is subject to the approval of the Administrator.

2.4 Pressure Probe and Gauge. A piezometer tube and mercury- or water-filled U-tube manometer capable of measuring stack pressure to within 2.5 mm (0.1 in.) Hg is used. The static tap of a standard type pitot tube or one leg of a Type S pitot tube with the face opening planes positioned parallel to the gas flow may also be used as the pressure probe.

2.5 Barometer. A mercury, aneroid, or other barometer capable of measuring atmospheric pressure to within 2.5 mm Hg (0.1 in. Hg) may be used. In many cases, the barometric reading may be obtained from a nearby national weather service station, in which case the station value (which is the absolute barometric pressure) shall be requested and an adjustment for elevation differences between the weather station and the sampling point shall be applied at a rate of minus 2.5 mm (0.1 in.) Hg per 30 meter (100 foot) elevation increase, or vice-versa for elevation decrease.

2.6 Gas Density Determination Equipment. Method 3 equipment, if needed (see Section 3.6), to determine the stack gas dry molecular weight, and Reference Method 4 or Method 5 equipment for moisture content determination; other methods may be used subject to approval of the Administrator.

2.7 Calibration Pitot Tube. When calibration of the Type S pitot tube is necessary (see Section 4), a standard pitot tube is used as a reference. The standard pitot tube shall, preferably, have a known

coefficient, obtained either (1) directly from the National Bureau of Standards, Route 70 S, Quince Orchard Road, Gaithersburg, Maryland, or (2) by calibration against another standard pitot tube with an NBS-traceable coefficient. Alternatively, a standard pitot tube designed according to the criteria given in 2.7.1 through 2.7.5 below and illustrated in Figure 2-4 (see also Citations 7, 8, and 17 in Section 6) may be used. Pitot tubes designed according to these specifications will have baseline coefficients of about 0.99 $\pm$ 0.01.

2.7.1 Hemispherical (shown in Figure 2-4), ellipsoidal, or conical tip.

2.7.2 A minimum of six diameters straight run (based upon D, the external diameter of the tube) between the tip and the static pressure holes.

2.7.3 A minimum of eight diameters straight run between the static pressure holes and the centerline of the external tube, following the 90 degree bend.

2.7.4 Static pressure holes of equal size (approximately 0.1 D), equally spaced in a piezometer ring configuration.

2.7.5 Ninety degree bend, with curved or mitered junction.

2.8 Differential Pressure Gauge for Type S Pitot Tube Calibration. An inclined manometer or equivalent is used. If the single-velocity calibration technique is employed (see Section 4.1.2.3), the calibration differential pressure gauge shall be readable to the nearest 0.13 mm H_2O (0.005 in. H_2O). For multivelocity calibrations, the gauge shall be readable to the nearest 0.13 mm H_2O (0.005 in H_2O) for Δp values between 1.3 and 25 mm H_2O (0.05 and 1.0 in. H_2O), and to the nearest 1.3 mm H_2O (0.05 in. H_2O) for Δp values above 25 mm H_2O (1.0 in. H_2O). A special, more sensitive gauge will be required to read Δp values below 1.3 mm H_2O [0.05 in. H_2O](see Citation 18 in Section 6).

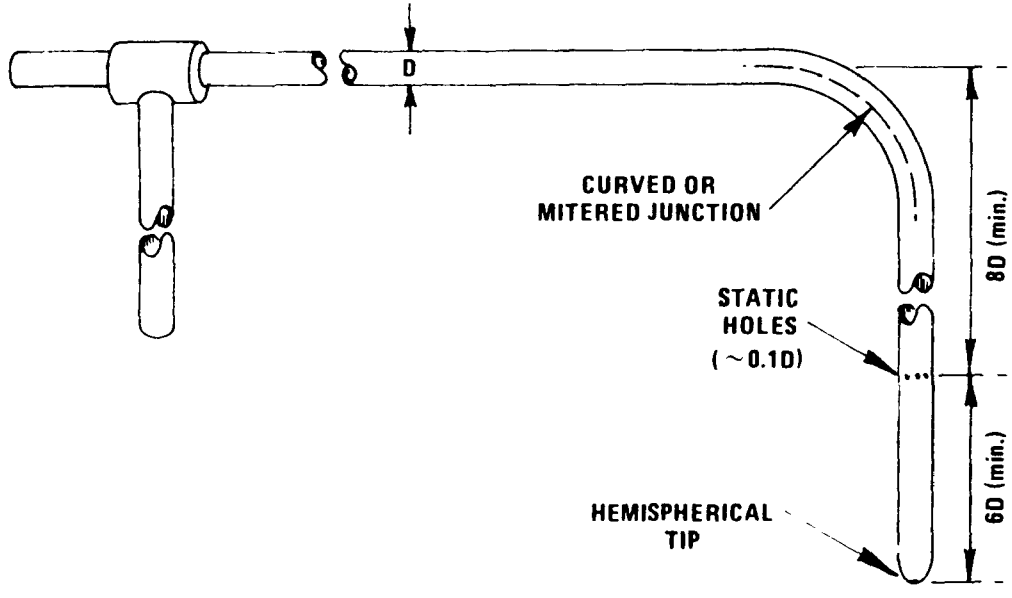

Figure 2-4. Standard pitot tube design specifications.

3. Procedure

3.1 Set up the apparatus as shown in Figure 2-1. Capillary tubing or surge tanks installed between the manometer and pitot tube may be used to dampen Δp fluctuations. It is recommended, but not required, that a pretest leak-check be conducted, as follows: (1) blow through the pitot impact opening until at least 7.6 cm (3 in.) H_2O velocity pressure registers on the manometer; then, close off the impact opening. The pressure shall remain stable for at least 15 seconds; (2) do the same for the static pressure side, except using suction to obtain the minimum of 7.6 cm (3 in.) H_2O. Other leak-check procedures, subject to the approval of the Administrator, may be used.

3.2 Level and zero the manometer. Because the manometer level and zero may drift due to vibrations and temperature changes, make periodic checks during the traverse. Record all necessary data as shown in the example data sheet (Figure 2-5).

3.3 Measure the velocity head and temperature at the traverse points specified by Method 1. Ensure that the proper differential pressure gauge is being used for the range of Δp values encountered (see Section 2.2). If it is necessary to change to a more sensitive gauge, do so, and remeasure the Δp and temperature readings at each traverse point. Conduct a post-test leak-check (mandatory), as described in Section 3.1 above, to validate the traverse run.

3.4 Measure the static pressure in the stack. One reading is usually adequate.

3.5 Determine the atmospheric pressure.

3.6 Determine the stack gas dry molecular weight. For combustion processes or processes that emit essentially CO_2, O_2, CO, and N_2, use

PLANT _____

DATE _____ RUN NO. _____

STACK DIAMETER OR DIMENSIONS, m(in.) _____

BAROMETRIC PRESSURE, mm Hg (in. Hg) _____

CROSS SECTIONAL AREA, $m^2(ft^2)$ _____

OPERATORS _____

PITOT TUBE I.D. NO. _____

AVG. COEFFICIENT, C_p = _____

LAST DATE CALIBRATED _____

SCHEMATIC OF STACK CROSS SECTION

Traverse Pt. No.	Vel. Hd., Δp mm (in.) H_2O	Stack Temperature		P_g mm Hg (in.Hg)	$\sqrt{\Delta p}$
		t_s, °C (°F)	T_s, °K (°R)		
		Average			

Figure 2-5. Velocity traverse data.

Method 3. For processes emitting essentially air, an analysis need not be conducted; use a dry molecular weight of 29.0. For other processes, other methods, subject to the approval of the Administrator, must be used.

3.7 Obtain the moisture content from Reference Method 4 (or equivalent) or from Method 5.

3.8 Determine the cross-sectional area of the stack or duct at the sampling location. Whenever possible, physically measure the stack dimensions rather than using blueprints.

4. Calibration

4.1 Type S Pitot Tube. Before its initial use, carefully examine the Type S pitot tube in top, side, and end views to verify that the face openings of the tube are aligned within the specifications illustrated in Figure 2-2 or 2-3. The pitot tube shall not be used if it fails to meet these alignment specifications.

After verifying the face opening alignment, measure and record the following dimensions of the pitot tube: (a) the external tubing diameter (dimension D_t, Figure 2-2b); and (b) the base-to-opening plane distances (dimensions P_A and P_B, Figure 2-2b). If D_t is between 0.48 and 0.95 cm (3/16 and 3/8 in.), and if P_A and P_B are equal and between 1.05 and 1.50 D_t, there are two possible options: (1) the pitot tube may be calibrated according to the procedure outlined in Sections 4.1.2 through 4.1.5 below, or (2) a baseline (isolated tube) coefficient value of 0.84 may be assigned to the pitot tube. Note, however, that if the pitot tube is part of an assembly, calibration may still be required, despite knowledge of the baseline coefficient value (see Section 4.1.1).

If D_t, P_A, and P_B are outside the specified limits, the pitot tube must be calibrated as outlined in 4.1.2 through 4.1.5 below.

4.1.1 Type S Pitot Tube Assemblies. During sample and velocity traverses, the isolated Type S pitot tube is not always used; in many instances, the pitot tube is used in combination with other source-sampling components (thermocouple, sampling probe, nozzle) as part of an "assembly." The presence of other sampling components can sometimes affect the baseline value of the Type S pitot tube coefficient (Citation 9 in Section 6); therefore an assigned (or otherwise known) baseline coefficient value may or may not be valid for a given assembly. The baseline and assembly coefficient values will be identical only when the relative placement of the components in the assembly is such that aerodynamic interference effects are eliminated. Figures 2-6 through 2-8 illustrate interference-free component arrangements for Type S pitot tubes having external tubing diameters between 0.48 and 0.95 cm (3/16 and 3/8 in.). Type S pitot tube assemblies that fail to meet any or all of the specifications of Figures 2-6 through 2-8 shall be calibrated according to the procedure outlined in Sections 4.1.2 through 4.1.5 below, and prior to calibration, the values of the intercomponent spacings (pitot-nozzle, pitot-thermocouple, pitot-probe sheath) shall be measured and recorded.

Note: Do not use any Type S pitot tube assembly which is constructed such that the impact pressure opening plane of the pitot tube is below the entry plane of the nozzle (see Figure 2-6b).

4.1.2 Calibration Setup. If the Type S pitot tube is to be calibrated, one leg of the tube shall be permanently marked A, and the other, B. Calibration shall be done in a flow system having the following essential design features:

4.1.2.1 The flowing gas stream must be confined to a duct of definite cross-sectional area, either circular or rectangular. For

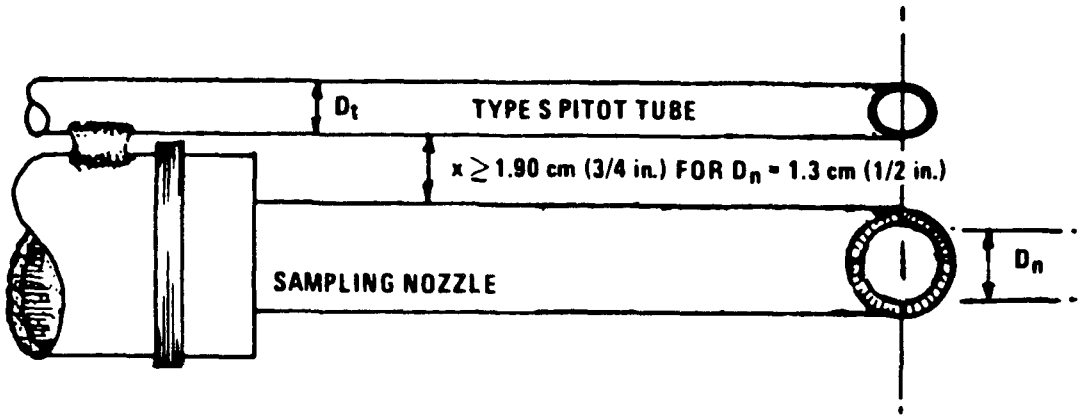

A. BOTTOM VIEW; SHOWING MINIMUM PITOT-NOZZLE SEPARATION.

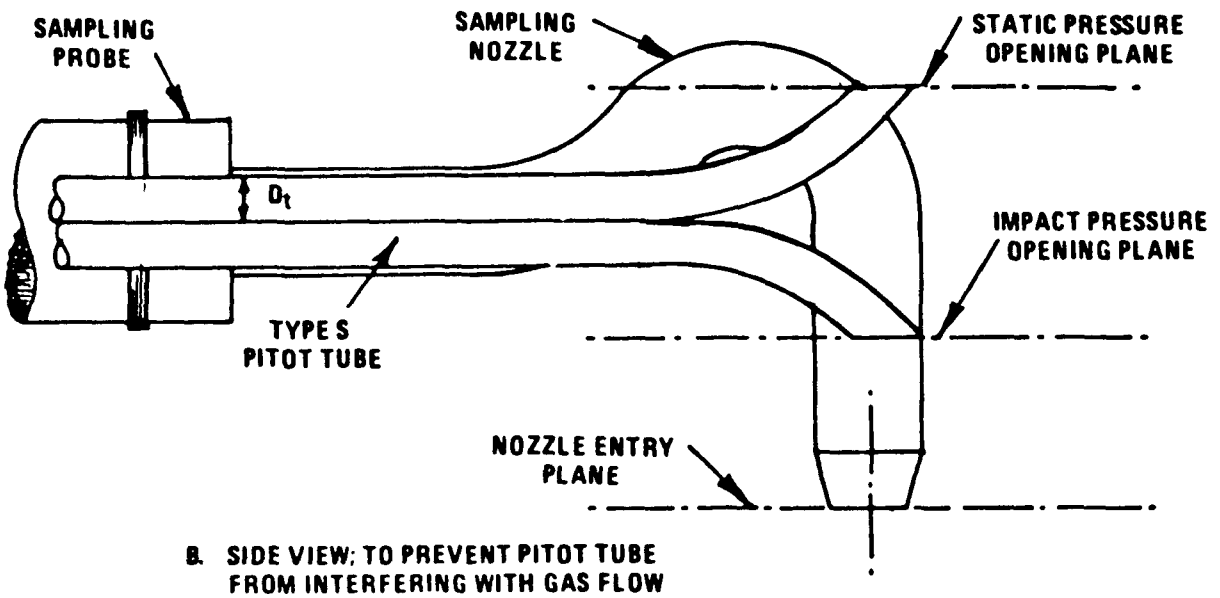

B. SIDE VIEW; TO PREVENT PITOT TUBE FROM INTERFERING WITH GAS FLOW STREAMLINES APPROACHING THE NOZZLE, THE IMPACT PRESSURE OPENING PLANE OF THE PITOT TUBE SHALL BE EVEN WITH OR ABOVE THE NOZZLE ENTRY PLANE.

Figure 2-6. Proper pitot tube - sampling nozzle configuration to prevent aerodynamic interference; buttonhook - type nozzle; centers of nozzle and pitot opening aligned; D_t between 0.48 and 0.95 cm (3/16 and 3/8 in.).

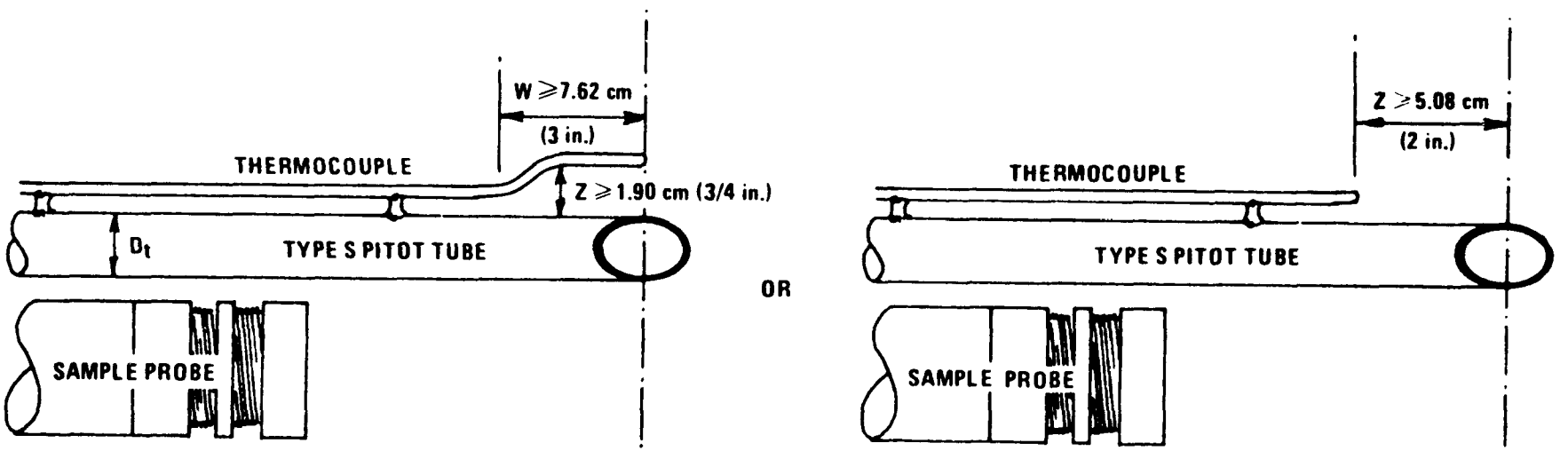

Figure 2-7. Proper thermocouple placement to prevent interference; D_t between 0.48 and 0.95 cm (3/16 and 3/8 in.).

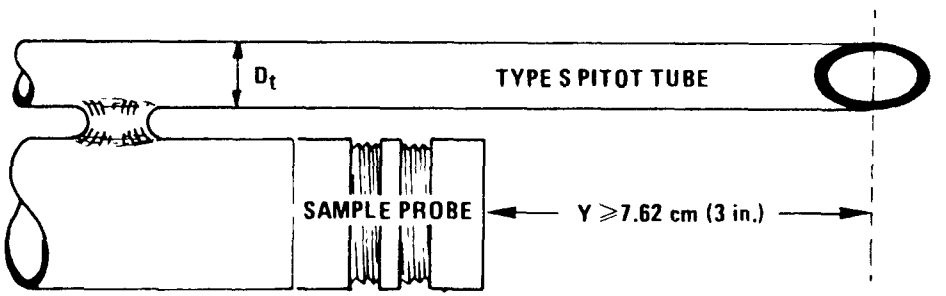

Figure 2-8. Minimum pitot-sample probe separation needed to prevent interference; D_t between 0.48 and 0.95 cm (3/16 and 3/8 in.).

circular cross-sections, the minimum duct diameter shall be 30.5 cm (12 in.); for rectangular cross-sections, the width (shorter side) shall be at least 25.4 cm (10 in.).

4.1.2.2 The cross-sectional area of the calibration duct must be constant over a distance of 10 or more duct diameters. For a rectangular cross-section, use an equivalent diameter, calculated from the following equation, to determine the number of duct diameters:

$$D_e = \frac{2LW}{(L + W)} \qquad \text{Equation 2-1}$$

where:

D_e = Equivalent diameter

L = Length

W = Width

To ensure the presence of stable, fully developed flow patterns at the calibration site, or "test section," the site must be located at least eight diameters downstream and two diameters upstream from the nearest disturbances.

Note: The eight- and two-diameter criteria are not absolute; other test section locations may be used (subject to approval of the Administrator), provided that the flow at the test site is stable and demonstrably parallel to the duct axis.

4.1.2.3 The flow system shall have the capacity to generate a test-section velocity around 915 m/min (3000 ft/min). This velocity must be constant with time to guarantee steady flow during calibration. Note that Type S pitot tube coefficients obtained by single-velocity calibration at 915 m/min (3000 ft/min) will generally be valid to within ± 3 percent for the measurement of velocities above 305 m/min

(1000 ft/min) and to within ±5 to 6 percent for the measurement of velocities between 180 and 305 m/min (600 and 1000 ft/min). If a more precise correlation between C_p and velocity is desired, the flow system shall have the capacity to generate at least four distinct, time-invariant test-section velocities covering the velocity range from 180 to 1525 m/min (600 to 5000 ft/min), and calibration data shall be taken at regular velocity intervals over this range (see Citations 9 and 14 in Section 6 for details).

4.1.2.4 Two entry ports, one each for the standard and Type S pitot tubes, shall be cut in the test section; the standard pitot entry port shall be located slightly downstream of the Type S port, so that the standard and Type S impact openings will lie in the same cross-sectional plane during calibration. To facilitate alignment of the pitot tubes during calibration, it is advisable that the test section be constructed of plexiglas or some other transparent material.

4.1.3 Calibration Procedure. Note that this procedure is a general one and must not be used without first referring to the special considerations presented in Section 4.1.5. Note also that this procedure applies only to single-velocity calibration. To obtain calibration data for the A and B sides of the Type S pitot tube, proceed as follows:

4.1.3.1 Make sure that the manometer is properly filled and that the oil is free from contamination and is of the proper density. Inspect and leak-check all pitot lines; repair or replace if necessary.

4.1.3.2 Level and zero the manometer. Turn on the fan and allow the flow to stabilize. Seal the Type S entry port.

4.1.3.3 Ensure that the manometer is level and zeroed. Position the standard pitot tube at the calibration point (determined as outlined

in Section 4.1.5.1), and align the tube so that its tip is pointed directly into the flow. Particular care should be taken in aligning the tube to avoid yaw and pitch angles. Make sure that the entry port surrounding the tube is properly sealed.

4.1.3.4 Read Δp_{std} and record its value in a data table similar to the one shown in Figure 2-9. Remove the standard pitot tube from the duct and disconnect it from the manometer. Seal the standard entry port.

4.1.3.5 Connect the Type S pitot tube to the manometer. Open the Type S entry port. Check the manometer level and zero. Insert and align the Type S pitot tube so that its A side impact opening is at the same point as was the standard pitot tube and is pointed directly into the flow. Make sure that the entry port surrounding the tube is properly sealed.

4.1.3.6 Read Δp_s and enter its value in the data table. Remove the Type S pitot tube from the duct and disconnect it from the manometer.

4.1.3.7 Repeat steps 4.1.3.3 through 4.1.3.6 above until three pairs of Δp readings have been obtained.

4.1.3.8 Repeat steps 4.1.3.3 through 4.1.3.7 above for the B side of the Type S pitot tube.

4.1.3.9 Perform calculations, as described in Section 4.1.4 below.

4.1.4 Calculations.

4.1.4.1 For each of the six pairs of Δp readings (i.e., three from side A and three from side B) obtained in Section 4.1.3 above, calculate the value of the Type S pitot tube coefficient as follows:

PITOT TUBE IDENTIFICATION NUMBER: _____ DATE. _____

CALIBRATED BY: _____

	"A" SIDE CALIBRATION			
RUN NO.	Δp_{std} cm H_2O (in. H_2O)	$\Delta p_{(s)}$ cm H_2O (in. H_2O)	$C_{p(s)}$	DEVIATION $C_{p(s)} - \bar{C}_p(A)$
1				
2				
3				
		$\bar{C}_p$ (SIDE A)		

	"B" SIDE CALIBRATION			
RUN NO.	Δp_{std} cm H_2O (in. H_2O)	$\Delta p_{(s)}$ cm H_2O (in. H_2O)	$C_{p(s)}$	DEVIATION $C_{p(s)} - \bar{C}_p(B)$
1				
2				
3				
		$\bar{C}_p$ (SIDE B)		

$$\text{AVERAGE DEVIATION} = \sigma\,(\text{A OR B}) = \frac{\sum_{1}^{3} \left| C_{p(s)} - \bar{C}_p(\text{A OR B}) \right|}{3} \longleftarrow \text{MUST BE} \leq 0.01$$

$$\left| \bar{C}_p\,(\text{SIDE A}) - \bar{C}_p\,(\text{SIDE B}) \right| \longleftarrow \text{MUST BE} \leq 0.01$$

Figure 2-9. Pitot tube calibration data.

$$C_{p(s)} = C_{p(std)} \sqrt{\frac{\Delta p_{std}}{\Delta p_s}} \qquad \text{Equation 2-2}$$

where:

$C_{p(s)}$ = Type S pitot tube coefficient

$C_{p(std)}$ = Standard pitot tube coefficient; use 0.99 if the coefficient is unknown and the tube is designed according to the criteria of Sections 2.7.1 to 2.7.5 of this method.

Δp_{std} = Velocity head measured by the standard pitot tube, cm H_2O (in. H_2O)

Δp_s = Velocity head measured by the Type S pitot tube, cm H_2O (in. H_2O)

4.1.4.2 Calculate $\overline{C}_p$ (side A), the mean A-side coefficient, and $\overline{C}_p$ (side B), the mean B-side coefficient; calculate the difference between these two average values.

4.1.4.3 Calculate the deviation of each of the three A-side values of $C_{p(s)}$ from $\overline{C}_p$ (side A), and the deviation of each B-side value of $C_{p(s)}$ from $\overline{C}_p$ (side B). Use the following equation:

$$\text{Deviation} = C_{p(s)} - \overline{C}_p \text{ (A or B)} \qquad \text{Equation 2-3}$$

4.1.4.4 Calculate σ, the average deviation from the mean, for both the A and B sides of the pitot tube. Use the following equation:

$$\sigma \text{ (side A or B)} = \frac{\sum_{1}^{3} |C_{p(s)} - \overline{C}_p \text{ (A or B)}|}{3} \qquad \text{Equation 2-4}$$

4.1.4.5 Use the Type S pitot tube only if the values of σ (side A) and σ (side B) are less than or equal to 0.01 and if the absolute value of the difference between $\overline{C}_p$ (A) and $\overline{C}_p$ (B) is 0.01 or less.

4.1.5 Special considerations.

4.1.5.1 Selection of calibration point.

4.1.5.1.1 When an isolated Type S pitot tube is calibrated, select a calibration point at or near the center of the duct, and follow the procedures outlined in Sections 4.1.3 and 4.1.4 above. The Type S pitot coefficients so obtained, i.e., $\overline{C}_p$ (side A) and $\overline{C}_p$ (side B), will be valid, so long as either: (1) the isolated pitot tube is used; or (2) the pitot tube is used with other components (nozzle, thermocouple, sample probe) in an arrangement that is free from aerodynamic interference effects (see Figures 2-6 through 2-8).

4.1.5.1.2 For Type S pitot tube-thermocouple combinations (without sample probe), select a calibration point at or near the center of the duct, and follow the procedures outlined in Sections 4.1.3 and 4.1.4 above. The coefficients so obtained will be valid so long as the pitot tube-thermocouple combination is used by itself or with other components in an interference-free arrangement (Figures 2-6 and 2-8).

4.1.5.1.3 For assemblies with sample probes, the calibration point should be located at or near the center of the duct; however,

insertion of a probe sheath into a small duct may cause significant cross-sectional area blockage and yield incorrect coefficient values (Citation 9 in Section 6). Therefore, to minimize the blockage effect, the calibration point may be a few inches off-center if necessary. The actual blockage effect will be negligible when the theoretical blockage, as determined by a projected-area model of the probe sheath, is 2 percent or less of the duct cross-sectional area for assemblies without external sheaths (Figure 2-10a), and 3 percent or less for assemblies with external sheaths (Figure 2-10b).

4.1.5.2 For those probe assemblies in which pitot tube-nozzle interference is a factor (i.e., those in which the pitot-nozzle separation distance fails to meet the specification illustrated in Figure 2-6a), the value of $C_{p(s)}$ depends upon the amount of free-space between the tube and nozzle, and therefore is a function of nozzle size. In these instances, separate calibrations shall be performed with each of the commonly used nozzle sizes in place. Note that the single-velocity calibration technique is acceptable for this purpose, even though the larger nozzle sizes (>0.635 cm or 1/4 in.) are not ordinarily used for isokinetic sampling at velocities around 915 m/min (3000 ft/min), which is the calibration velocity; note also that it is not necessary to draw an isokinetic sample during calibration (see Citation 19 in Section 6).

4.1.5.3 For a probe assembly constructed such that its pitot tube is always used in the same orientation, only one side of the pitot tube need be calibrated (the side which will face the flow). The pitot tube must still meet the alignment specifications of Figure 2-2 or 2-3, however, and must have an average deviation (σ) value of 0.01 or less (see Section 4.1.4.4).

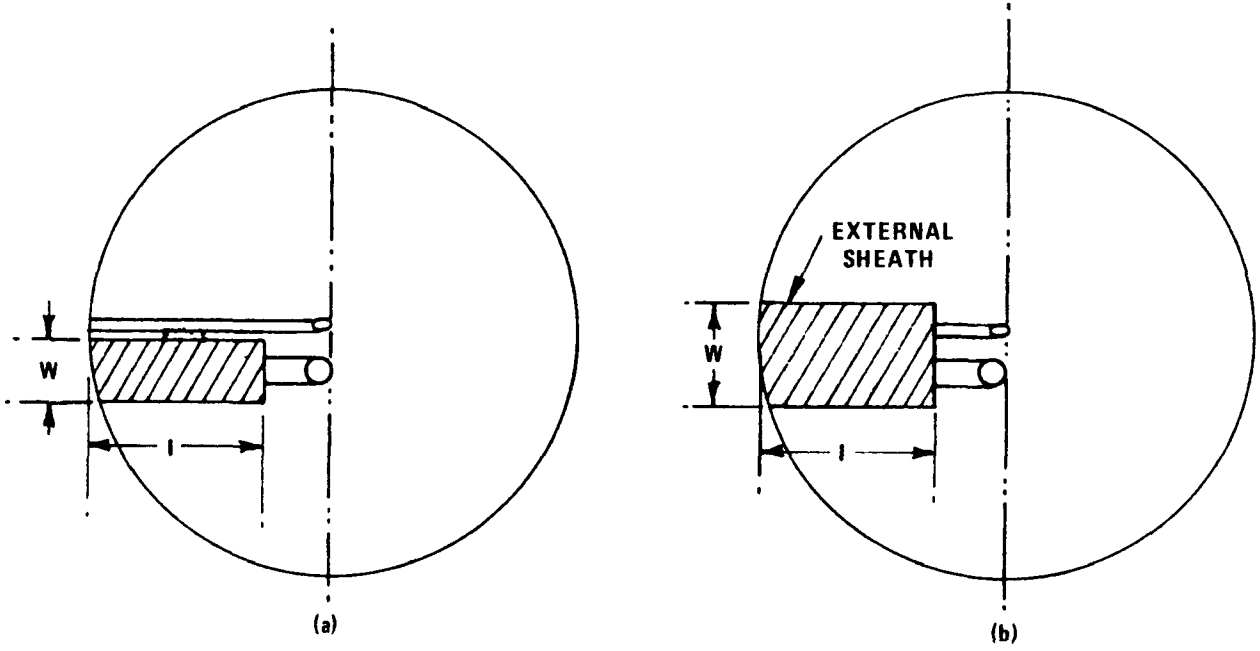

$$\text{ESTIMATED SHEATH BLOCKAGE (\%)} = \left[\frac{l \times W}{\text{DUCT AREA}}\right] \times 100$$

Figure 2-10. Projected-area models for typical pitot tube assemblies.

4.1.6 Field Use and Recalibration.

4.1.6.1 Field Use.

4.1.6.1.1 When a Type S pitot tube (isolated tube or assembly) is used in the field, the appropriate coefficient value (whether assigned or obtained by calibration) shall be used to perform velocity calculations. For calibrated Type S pitot tubes, the A side coefficient shall be used when the A side of the tube faces the flow, and the B side coefficient shall be used when the B side faces the flow; alternatively, the arithmetic average of the A and B side coefficient values may be used, irrespective of which side faces the flow.

4.1.6.1.2 When a probe assembly is used to sample a small duct (12 to 36 in. in diameter), the probe sheath sometimes blocks a significant part of the duct cross-section, causing a reduction in the effective value of $\overline{C}_{p(s)}$. Consult Citation 9 in Section 6 for details. Conventional pitot-sampling probe assemblies are not recommended for use in ducts having inside diameters smaller than 12 inches (Citation 16 in Section 6).

4.1.6.2 Recalibration.

4.1.6.2.1 Isolated Pitot Tubes. After each field use, the pitot tube shall be carefully reexamined in top, side, and end views. If the pitot face openings are still aligned within the specifications illustrated in Figure 2-2 or 2-3, it can be assumed that the baseline coefficient of the pitot tube has not changed. If, however, the tube has been damaged to the extent that it no longer meets the specifications of Figure 2-2 or 2-3, the damage shall either be repaired to restore proper alignment of the face openings or the tube shall be discarded.

4.1.6.2.2 Pitot Tube Assemblies. After each field use, check the face opening alignment of the pitot tube, as in Section 4.1.6.2.1; also,

remeasure the intercomponent spacings of the assembly. If the intercomponent spacings have not changed and the face opening alignment is acceptable, it can be assumed that the coefficient of the assembly has not changed. If the face opening alignment is no longer within the specifications of Figures 2-2 or 2-3, either repair the damage or replace the pitot tube (calibrating the new assembly, if necessary). If the intercomponent spacings have changed, restore the original spacings or recalibrate the assembly.

4.2 Standard pitot tube (if applicable). If a standard pitot tube is used for the velocity traverse, the tube shall be constructed according to the criteria of Section 2.7 and shall be assigned a baseline coefficient value of 0.99. If the standard pitot tube is used as part of an assembly, the tube shall be in an interference-free arrangement (subject to the approval of the Administrator).

4.3 Temperature Gauges. After each field use, calibrate dial thermometers, liquid-filled bulb thermometers, thermocouple-potentiometer systems, and other gauges at a temperature within 10 percent of the average absolute stack temperature. For temperatures up to 405°C (761°F), use an ASTM mercury-in-glass reference thermometer, or equivalent, as a reference; alternatively, either a reference thermocouple and potentiometer (calibrated by NBS) or thermometric fixed points, e.g., ice bath and boiling water (corrected for barometric pressure) may be used. For temperatures above 405°C (761°F), use an NBS-calibrated reference thermocouple-potentiometer system or an alternate reference, subject to the approval of the Administrator.

If, during calibration, the absolute temperatures measured with the gauge being calibrated and the reference gauge agree within 1.5 percent, the temperature data taken in the field shall be considered valid. Otherwise, the pollutant emission test shall either be

considered invalid or adjustments (if appropriate) of the test results shall be made, subject to the approval of the Administrator.

4.4 Barometer. Calibrate the barometer used against a mercury barometer.

5. Calculations

Carry out calculations, retaining at least one extra decimal figure beyond that of the acquired data. Round off figures after final calculation.

5.1 Nomenclature.

A = Cross-sectional area of stack, m^2 (ft^2).

B_{ws} = Water vapor in the gas stream (from Method 5 or Reference Method 4), proportion by volume.

C_p = Pitot tube coefficient, dimensionless.

K_p = Pitot tube constant,

$$34.97 \frac{m}{sec} \left[\frac{(g/g\text{-mole})(mm\ Hg)}{(°K)(mm\ H_2O)}\right]^{1/2}$$

for the metric system and

$$85.49 \frac{ft}{sec} \left[\frac{(lb/lb\text{-mole})(in.\ Hg)}{(°R)(in.\ H_2O)}\right]^{1/2}$$

for the English system.

M_d = Molecular weight of stack gas, dry basis (see Section 3.6) g/g-mole (lb/lb-mole).

M_s = Molecular weight of stack gas, wet basis, g/g-mole (lb/lb-mole).

$$= M_d(1 - B_{ws}) + 18.0\ B_{ws} \qquad \text{Equation 2-5}$$

P_{bar} = Barometric pressure at measurement site, mm Hg (in. Hg).

P_g = Stack static pressure, mm Hg (in. Hg).

P_s = Absolute stack gas pressure, mm Hg (in. Hg).

$= P_{bar} + P_g$ Equation 2-6

P_{std} = Standard absolute pressure, 760 mm Hg (29.92 in. Hg).

Q_{sd} = Dry volumetric stack gas flow rate corrected to standard conditions, dscm/hr (dscf/hr).

t_s = Stack temperature, °C (°F).

T_s = Absolute stack temperature, °K (°R).

$= 273 + t_s$ for metric Equation 2-7

$= 460 + t_s$ for English Equation 2-8

T_{std} = Standard absolute temperature, 293 °K (528°R).

v_s = Average stack gas velocity, m/sec (ft/sec).

Δp = Velocity head of stack gas, mm H_2O (in. H_2O).

3600 = Conversion factor, sec/hr.

18.0 = Molecular weight of water, g/g-mole (lb/lb-mole).

5.2 Average stack gas velocity.

$$v_s = K_p C_p \left(\sqrt{\Delta p}\right)_{avg} \sqrt{\frac{T_{s(avg)}}{P_s M_s}} \qquad \text{Equation 2-9}$$

5.3 Average stack gas dry volumetric flow rate.

$$Q_{sd} = 3600\,(1-B_{ws})\,v_s A \left(\frac{T_{std}}{T_{s(avg)}}\right)\left(\frac{P_s}{P_{std}}\right) \qquad \text{Equation 2-10}$$

6. <u>Bibliography</u>

1. Mark, L. S. Mechanical Engineers' Handbook. New York. McGraw-Hill Book Co., Inc. 1951.

2. Perry, J. H. Chemical Engineers' Handbook. New York McGraw-Hill Book Co., Inc. 1960.

3. Shigehara, R. T., W. F. Todd, and W. S. Smith. Significance of Errors in Stack Sampling Measurements. U. S. Environmental Protection Agency, Research Triangle Park, N. C. (Presented at the Annual Meeting of the Air Pollution Control Association, St. Louis, Mo., June 14-19, 1970.)

4. Standard Method for Sampling Stacks for Particulate Matter. In: 1971 Book of ASTM Standards, Part 23. Philadelphia, Pa. 1971. ASTM Designation D-2928-71.

5. Vennard, J. K. Elementary Fluid Mechanics. New York. John Wiley and Sons, Inc. 1947.

6. Fluid Meters - Their Theory and Application. American Society of Mechanical Engineers, New York, N.Y. 1959.

7. ASHRAE Handbook of Fundamentals. 1972. p. 208.

8. Annual Book of ASTM Standards, Part 26. 1974. p. 648.

9. Vollaro, R. F. Guidelines for Type S Pitot Tube Calibration. U. S. Environmental Protection Agency, Research Triangle Park, N. C. (Presented at 1st Annual Meeting, Source Evaluation Society, Dayton, Ohio, September 18, 1975.)

10. Vollaro, R. F. A Type S Pitot Tube Calibration Study. U. S. Environmental Protection Agency, Emission Measurement Branch, Research Triangle Park, N. C. July 1974.

11. Vollaro, R. F. The Effects of Impact Opening Misalignment on the Value of the Type S Pitot Tube Coefficient. U. S. Environmental Protection Agency, Emission Measurement Branch, Research Triangle Park, N. C. October 1976.

12. Vollaro, R. F. Establishment of a Baseline Coefficient Value for Properly Constructed Type S Pitot Tubes. U. S. Environmental Protection Agency, Emission Measurement Branch, Research Triangle Park, N. C. November 1976.

13. Vollaro, R. F. An Evaluation of Single-Velocity Calibration Technique as a Means of Determining Type S Pitot Tube Coefficients. U. S. Environmental Protection Agency, Emission Measurement Branch, Research Triangle Park, N. C. August 1975.

14. Vollaro, R. F. The Use of Type S Pitot Tubes for the Measurement of Low Velocities. U. S. Environmental Protection Agency, Emission Measurement Branch, Research Triangle Park, N. C. November 1976.

15. Smith, Marvin L. Velocity Calibration of EPA Type Source Sampling Probe. United Technologies Corporation, Pratt and Whitney Aircraft Division, East Hartford, Conn. 1975.

16. Vollaro, R. F. Recommended Procedure for Sample Traverses in Ducts Smaller than 12 Inches in Diameter. U. S. Environmental Protection Agency, Emission Measurement Branch, Research Triangle Park, N. C. November 1976.

17. Ower, E. and R. C. Pankhurst. The Measurement of Air Flow, 4th Ed. London, Pergamon Press. 1966.

18. Vollaro, R. F. A Survey of Commercially Available Instrumentation for the Measurement of Low-Range Gas Velocities. U. S. Environmental Protection Agency, Emission Measurement Branch, Research Triangle Park, N. C. November 1976. (Unpublished Paper)

19. Gnyp, A. W., C. C. St. Pierre, D. S. Smith, D. Mozzon, and J. Steiner. An Experimental Investigation of the Effect of Pitot Tube-Sampling Probe Configurations on the Magnitude of the S Type Pitot Tube Coefficient for Commercially Available Source Sampling Probes. Prepared by the University of Windsor for the Ministry of the Environment, Toronto, Canada. February 1975.

GAS ANALYSIS FOR CARBON DIOXIDE, EXCESS AIR, AND DRY MOLECULAR WEIGHT

METHOD 3

METHOD 3--GAS ANALYSIS FOR CARBON DIOXIDE, OXYGEN, EXCESS AIR, AND DRY MOLECULAR WEIGHT

1. Principle and Applicability

1.1 Principle. A gas sample is extracted from a stack, by one of the following methods: (1) single-point, grab sampling; (2) single-point, integrated sampling; or (3) multi-point, integrated sampling. The gas sample is analyzed for percent carbon dioxide (CO_2), percent oxygen (O_2), and, if necessary, percent carbon monoxide (CO). If a dry molecular weight determination is to be made, either an Orsat or a Fyrite[1] analyzer may be used for the analysis; for excess air or emission rate correction factor determination, an Orsat analyzer must be used.

1.2 Applicability. This method is applicable for determining CO_2 and O_2 concentrations, excess air, and dry molecular weight of a sample from a gas stream of a fossil-fuel combustion process. The method may also be applicable to other processes where it has been determined that compounds other than CO_2, O_2, CO, and nitrogen (N_2) are not present in concentrations sufficient to affect the results.

Other methods, as well as modifications to the procedure described herein, are also applicable for some or all of the above determinations. Examples of specific methods and modifications include: (1) a multi-point sampling method using an Orsat analyzer to analyze individual grab samples obtained at each point; (2) a method using CO_2 or O_2 and stoichiometric calculations to determine dry molecular weight and excess air; (3) assigning a value of 30.0

[1]Mention of trade names or specific products does not constitute endorsement by the Environmental Protection Agency.

for dry molecular weight, in lieu of actual measurements, for processes burning natural gas, coal, or oil. These methods and modifications may be used, but are subject to the approval of the Administrator, U.S. Environmental Protection Agency.

2. Apparatus

As an alternative to the sampling apparatus and systems described herein, other sampling systems (e.g., liquid displacement) may be used provided such systems are capable of obtaining a representative sample and maintaining a constant sampling rate, and are otherwise capable of yielding acceptable results. Use of such systems is subject to the approval of the Administrator.

2.1 Grab Sampling (Figure 3-1).

2.1.1 Probe. The probe should be made of stainless steel or borosilicate glass tubing and should be equipped with an in-stack or out-stack filter to remove particulate matter (a plug of glass wool is satisfactory for this purpose). Any other material inert to O_2, CO_2, CO, and N_2 and resistant to temperature at sampling conditions may be used for the probe; examples of such material are aluminum, copper, quartz glass and Teflon.

2.1.2 Pump. A one-way squeeze bulb, or equivalent, is used to transport the gas sample to the analyzer.

2.2 Integrated Sampling (Figure 3-2).

2.2.1 Probe. A probe such as that described in Section 2.1.1 is suitable.

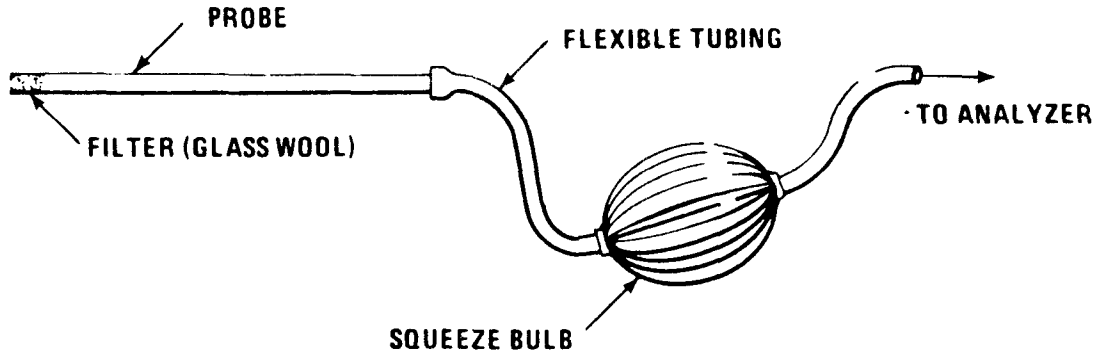

Figure 3-1. Grab-sampling train.

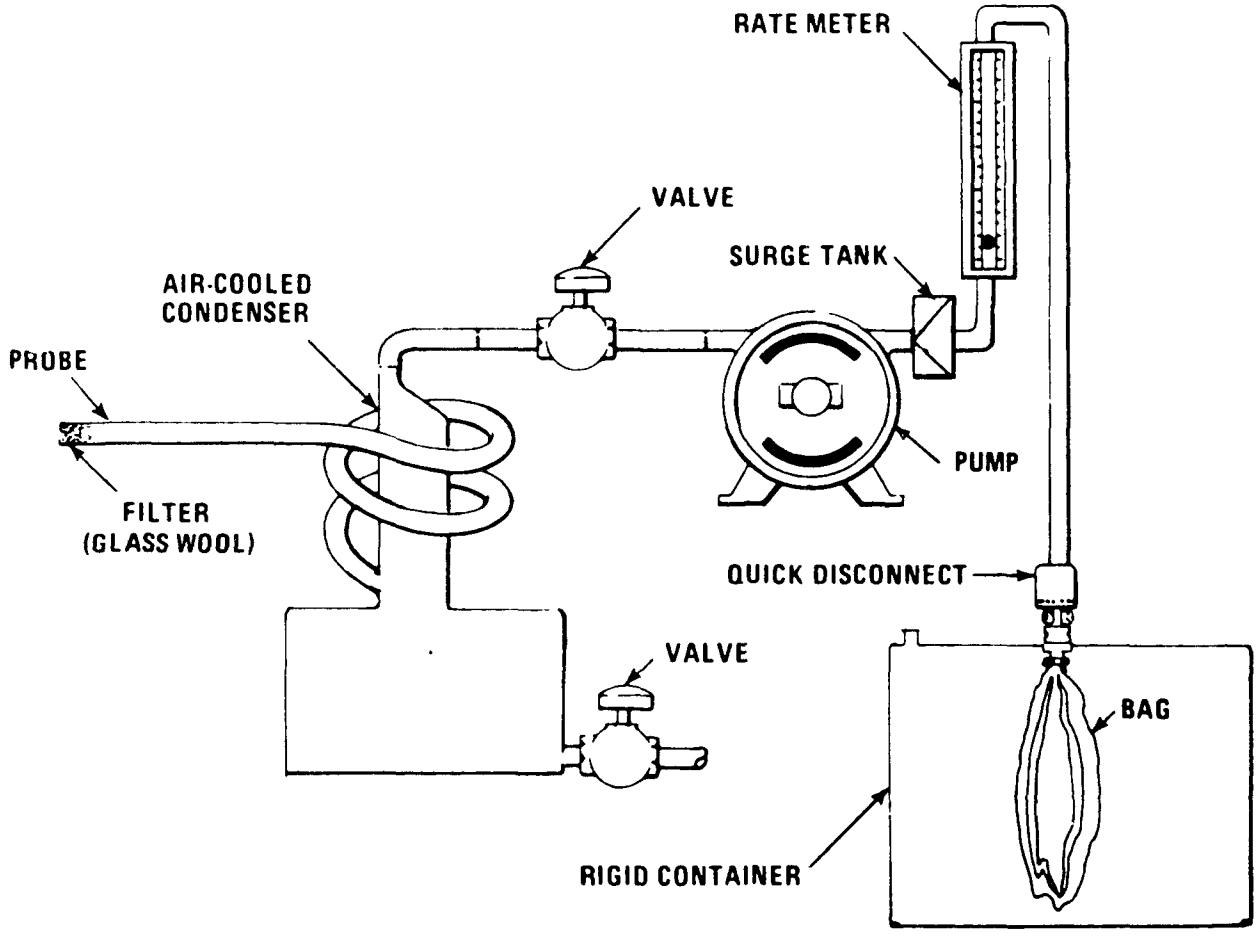

Figure 3-2. Integrated gas-sampling train.

2.2.2 Condenser. An air-cooled or water-cooled condenser, or other condenser that will not remove O_2, CO_2, CO, and N_2, may be used to remove excess moisture which would interfere with the operation of the pump and flow meter.

2.2.3 Valve. A needle valve is used to adjust sample gas flow rate.

2.2.4 Pump. A leak-free, diaphragm-type pump, or equivalent, is used to transport sample gas to the flexible bag. Install a small surge tank between the pump and rate meter to eliminate the pulsation effect of the diaphragm pump on the rotameter.

2.2.5 Rate Meter. The rotameter, or equivalent rate meter, used should be capable of measuring flow rate to within ± 2 percent of the selected flow rate. A flow rate range of 500 to 1000 cm^3/min is suggested.

2.2.6 Flexible Bag. Any leak-free plastic (e.g., Tedlar, Mylar, Teflon) or plastic-coated aluminum (e.g., aluminized Mylar) bag, or equivalent, having a capacity consistent with the selected flow rate and time length of the test run, may be used. A capacity in the range of 55 to 90 liters is suggested.

To leak-check the bag, connect it to a water manometer and pressurize the bag to 5 to 10 cm H_2O (2 to 4 in. H_2O). Allow to stand for 10 minutes. Any displacement in the water manometer indicates a leak. An alternative leak-check method is to pressurize the bag to 5 to 10 cm H_2O (2 to 4 in. H_2O) and allow to stand overnight. A deflated bag indicates a leak.

2.2.7 Pressure Gauge. A water-filled U-tube manometer, or equivalent, of about 28 cm (12 in.) is used for the flexible bag leak-check.

2.2.8 Vacuum Gauge. A mercury manometer, or equivalent, of at least 760 mm Hg (30 in. Hg) is used for the sampling train leak-check.

2.3 Analysis. For Orsat and Fyrite analyzer maintenance and operation procedures, follow the instructions recommended by the manufacturer, unless otherwise specified herein.

2.3.1 Dry Molecular Weight Determination. An Orsat analyzer or Fyrite type combustion gas analyzer may be used.

2.3.2 Emission Rate Correction Factor or Excess Air Determination. An Orsat analyzer must be used. For low CO_2 (less than 4.0 percent) or high O_2 (greater than 15.0 percent) concentrations, the measuring burette of the Orsat must have at least 0.1 percent subdivisions.

3. Dry Molecular Weight Determination

Any of the three sampling and analytical procedures described below may be used for determining the dry molecular weight.

3.1 Single-Point, Grab Sampling and Analytical Procedure.

3.1.1 The sampling point in the duct shall either be at the centroid of the cross section or at a point no closer to the walls than 1.00 m (3.3 ft), unless otherwise specified by the Administrator.

3.1.2 Set up the equipment as shown in Figure 3-1, making sure all connections ahead of the analyzer are tight and leak-free. If an Orsat analyzer is used, it is recommended that the analyzer be leak-checked by following the procedure in Section 5; however, the leak-check is optional.

3.1.3 Place the probe in the stack, with the tip of the probe positioned at the sampling point; purge the sampling line. Draw a sample into the analyzer and immediately analyze it for percent CO_2 and percent O_2. Determine the percentage of the gas that is N_2 and CO by subtracting the sum of the percent CO_2 and percent O_2 from 100 percent. Calculate the dry molecular weight as indicated in Section 6.3.

3.1.4 Repeat the sampling, analysis, and calculation procedures, until the dry molecular weights of any three grab samples differ from their mean by no more than 0.3 g/g-mole (0.3 lb/lb-mole). Average these three molecular weights, and report the results to the nearest 0.1 g/g-mole (lb/lb-mole).

3.2 Single-Point, Integrated Sampling and Analytical Procedure.

3.2.1 The sampling point in the duct shall be located as specified in Section 3.1.1.

3.2.2 Leak-check (optional) the flexible bag as in Section 2.2.6. Set up the equipment as shown in Figure 3-2. Just prior to sampling, leak-check (optional) the train by placing a vacuum gauge at the condenser inlet, pulling a vacuum of at least 250 mm Hg (10 in. Hg), plugging the outlet at the quick disconnect, and then turning off the pump. The vacuum should remain stable for at least 0.5 minute. Evacuate the flexible bag. Connect the probe and place it in the stack, with the tip of the probe positioned at the sampling point; purge the sampling line. Next, connect the bag and make sure that all connections are tight and leak free.

3.2.3 Sample at a constant rate. The sampling run should be simultaneous with, and for the same total length of time as, the pollutant emission rate determination. Collection of at least 30 liters (1.00 ft^3) of sample gas is recommended; however, smaller volumes may be collected, if desired.

3.2.4 Obtain one integrated flue gas sample during each pollutant emission rate determination. Within 8 hours after the sample is taken, analyze it for percent CO_2 and percent O_2 using either an Orsat analyzer or a Fyrite type combustion gas analyzer. If an Orsat analyzer is used, it is recommended that the Orsat leak-check described in Section 5 be performed before this determination; however, the check is optional. Determine the percentage of the gas that is N_2 and CO by subtracting the sum of the percent CO_2 and percent O_2 from 100 percent. Calculate the dry molecular weight as indicated in Section 6.3.

3.2.5 Repeat the analysis and calculation procedures until the individual dry molecular weights for any three analyses differ from their mean by no more than 0.3 g/g-mole (0.3 lb/lb-mole). Average these three molecular weights, and report the results to the nearest 0.1 g/g-mole (0.1 lb/lb-mole).

3.3. Multi-Point, Integrated Sampling and Analytical Procedure.

3.3.1 Unless otherwise specified by the Administrator, EPA, a minimum of eight traverse points shall be used for circular stacks having diameters less than 0.61 m (24 in.), a minimum of nine shall be used for rectangular stacks having equivalent diameters less than 0.61 m (24 in.), and a minimum of twelve traverse points shall be used for all other cases. The traverse points shall be located according to Method 1. The use of fewer points is subject to the approval of the Administrator.

3.3.2 Follow the procedures outlined in Sections 3.2.2 through 3.2.5, except for the following: traverse all sampling points and sample at each point for an equal length of time. Record sampling data as shown in Figure 3-3.

4. Emission Rate Correction Factor or Excess Air Determination

Note: A Fyrite type combustion gas analyzer is not acceptable or excess air or emission rate correction factor determination, unless approved by the Administrator. If both percent CO_2 and percent O_2 are measured, the analytical results of any of the three procedures given below may also be used for calculating the dry molecular weight.

Each of the three procedures below shall be used only when specified in an applicable subpart of the standards. The use of these procedures for other purposes must have specific prior approval of the Administrator.

4.1 Single-Point, Grab Sampling and Analytical Procedure.

4.1.1 The sampling point in the duct shall either be at the centroid of the cross-section or at a point no closer to the walls than 1.00 m (3.3 ft), unless otherwise specified by the Administrator.

4.1.2 Set up the equipment as shown in Figure 3-1, making sure all connections ahead of the analyzer are tight and leak-free. Leak-check the Orsat analyzer according to the procedure described in Section 5. This leak-check is mandatory.

4.1.3 Place the probe in the stack, with the tip of the probe positioned at the sampling point; purge the sampling line. Draw

TIME	TRAVERSE PT.	Q 1pm	% DEV.[a]
	AVERAGE		

[a] $\% \text{ DEV} = \left(\frac{Q - Q_{avg}}{Q_{avg}} \right) 100$ (MUST BE $\leqslant$ 10%)

Figure 3-3. Sampling rate data.

a sample into the analyzer. For emission rate correction factor determination, immediately analyze the sample, as outlined in Sections 4.1.4 and 4.1.5, for percent CO_2 or percent O_2. If excess air is desired, proceed as follows: (1) immediately analyze the sample, as in Sections 4.1.4 and 4.1.5, for percent CO_2, O_2, and CO; (2) determine the percentage of the gas that is N_2 by subtracting the sum of the percent CO_2, percent O_2, and percent CO from 100 percent; and (3) calculate percent excess air as outlined in Section 6.2.

4.1.4 To ensure complete absorption of the CO_2, O_2, or if applicable, CO, make repeated passes through each absorbing solution until two consecutive readings are the same. Several passes (three or four) should be made between readings. (If constant readings cannot be obtained after three consecutive readings, replace the absorbing solution.)

4.1.5 After the analysis is completed, leak-check (mandatory) the Orsat analyzer once again, as described in Section 5. For the results of the analysis to be valid, the Orsat analyzer must pass this leak test before and after the analysis. Note: Since this single-point, grab sampling and analytical procedure is normally conducted in conjunction with a single-point, grab sampling and analytical procedure for a pollutant, only one analysis is ordinarily conducted. Therefore, great care must be taken to obtain a valid sample and analysis. Although in most cases only CO_2 or O_2 is required, it is recommended that both CO_2 and O_2 be measured, and that Citation 5 in the Bibliography be used to validate the analytical data.

4.2 Single-Point, Integrated Sampling and Analytical Procedure.

4.2.1 The sampling point in the duct shall be located as specified in Section 4.1.1.

4.2.2 Leak-check (mandatory) the flexible bag as in Section 2.2.6. Set up the equipment as shown in Figure 3-2. Just prior to sampling, leak-check (mandatory) the train by placing a vacuum gauge at the condenser inlet, pulling a vacuum of at least 250 mm Hg (10 in. Hg), plugging the outlet at the quick disconnect, and then turning off the pump. The vacuum shall remain stable for at least 0.5 minute. Evacuate the flexible bag. Connect the probe and place it in the stack, with the tip of the probe positioned at the sampling point; purge the sampling line. Next, connect the bag and make sure that all connections are tight and leak free.

4.2.3 Sample at a constant rate, or as specified by the Administrator. The sampling run must be simultaneous with, and for the same total length of time as, the pollutant emission rate determination. Collect at least 30 liters (1.00 ft^3) of sample gas. Smaller volumes may be collected, subject to approval of the Administrator.

4.2.4 Obtain one integrated flue gas sample during each pollutant emission rate determination. For emission rate correction factor determination, analyze the sample within 4 hours after it is taken for percent CO_2 or percent O_2 (as outlined in Sections 4.2.5 through 4.2.7). The Orsat analyzer must be leak-checked (see Section 5) before the analysis. If excess air is desired, proceed as follows: (1) within 4 hours after the sample is taken, analyze it (as in Sections 4.2.5

through 4.2.7) for percent CO_2, O_2, and CO; (2) determine the percentage of the gas that is N_2 by subtracting the sum of the percent CO_2, percent O_2, and percent CO from 100 percent; (3) calculate percent excess air, as outlined in Section 6.2.

4.2.5 To ensure complete absorption of the CO_2, O_2, or if applicable, CO, make repeated passes through each absorbing solution until two consecutive readings are the same. Several passes (three or four) should be made between readings. (If constant readings cannot be obtained after three consecutive readings, replace the absorbing solution.)

4.2.6 Repeat the analysis until the following criteria are met:

4.2.6.1 For percent CO_2, repeat the analytical procedure until the results of any three analyses differ by no more than (a) 0.3 percent by volume when CO_2 is greater than 4.0 percent or (b) 0.2 percent by volume when CO_2 is less than or equal to 4.0 percent. Average the three acceptable values of percent CO_2 and report the results to the nearest 0.1 percent.

4.2.6.2 For percent O_2, repeat the analytical procedure until the results of any three analyses differ by no more than (a) 0.3 percent by volume when O_2 is less than 15.0 percent or (b) 0.2 percent by volume when O_2 is greater than or equal to 15.0 percent. Average the three acceptable values of percent O_2 and report the results to the nearest 0.1 percent.

4.2.6.3 For percent CO, repeat the analytical procedure until the results of any three analyses differ by no more than 0.3 percent. Average the three acceptable values of percent CO and report the results to the nearest 0.1 percent.

4.2.7 After the analysis is completed, leak-check (mandatory) the Orsat analyzer once again, as described in Section 5. For the results of the analysis to be valid, the Orsat analyzer must pass this leak test before and after the analysis. Note: Although in most instances only CO_2 or O_2 is required, it is recommended that both CO_2 and O_2 be measured, and that Citation 5 in the Bibliography be used to validate the analytical data.

4.3 Multi-Point, Integrated Sampling and Analytical Procedure.

4.3.1 Both the minimum number of sampling points and the sampling point location shall be as specified in Section 3.3.1 of this method. The use of fewer points than specified is subject to the approval of the Administrator.

4.3.2 Follow the procedures outlined in Sections 4.2.2 through 4.2.7, except for the following: Traverse all sampling points and sample at each point for an equal length of time. Record sampling data as shown in Figure 3-3.

5. Leak-Check Procedure for Orsat Analyzers

Moving an Orsat analyzer frequently causes it to leak. Therefore, an Orsat analyzer should be thoroughly leak-checked on site before the flue gas sample is introduced into it. The procedure for leak-checking an Orsat analyzer is:

5.1.1 Bring the liquid level in each pipette up to the reference mark on the capillary tubing and then close the pipette stopcock.

5.1.2 Raise the leveling bulb sufficiently to bring the confining liquid meniscus onto the graduated portion of the burette and then close the manifold stopcock.

5.1.3 Record the meniscus position.

5.1.4 Observe the meniscus in the burette and the liquid level in the pipette for movement over the next 4 minutes.

5.1.5 For the Orsat analyzer to pass the leak-check, two conditions must be met:

5.1.5.1 The liquid level in each pipette must not fall below the bottom of the capillary tubing during this 4-minute interval.

5.1.5.2 The meniscus in the burette must not change by more than 0.2 ml during this 4-minute interval.

5.1.6 If the analyzer fails the leak-check procedure, all rubber connections and stopcocks should be checked until the cause of the leak is identified. Leaking stopcocks must be disassembled, cleaned, and regreased. Leaking rubber connections must be replaced. After the analyzer is reassembled, the leak-check procedure must be repeated.

6. Calculations

6.1 Nomenclature.

M_d = Dry molecular weight, g/g-mole (lb/lb-mole).

%EA = Percent excess air.

$\%CO_2$ = Percent CO_2 by volume (dry basis).

$\%O_2$ = Percent O_2 by volume (dry basis).

%CO = Percent CO by volume (dry basis).

$\%N_2$ = Percent N_2 by volume (dry basis).

0.264 = Ratio of O_2 to N_2 in air, v/v.

0.280 = Molecular weight of N_2 or CO, divided by 100.

0.320 = Molecular weight of O_2 divided by 100.

0.440 = Molecular weight of CO_2 divided by 100.

6.2 Percent Excess Air. Calculate the percent excess air (if applicable), by substituting the appropriate values of percent O_2, CO, and N_2 (obtained from Section 4.1.3 or 4.2.4) into Equation 3-1.

$$\%EA = \left[\frac{\%O_2 - 0.5\%\ CO}{0.264\ \%N_2 - (\%O_2 - 0.5\%\ CO)} \right] 100 \qquad \text{Equation 3-1}$$

Note: The equation above assumes that ambient air is used as the source of O_2 and that the fuel does not contain appreciable amounts of N_2 (as do coke oven or blast furnace gases). For those cases when appreciable amounts of N_2 are present (coal, oil, and natural gas do not contain appreciable amounts of N_2) or when oxygen enrichment is used, alternate methods, subject to approval of the Administrator, are required.

6.3 Dry Molecular Weight. Use Equation 3-2 to calculate the dry molecular weight of the stack gas.

$$M_d = 0.440(\%CO_2) + 0.320(\%O_2) + 0.280(\%N_2 + \%CO) \qquad \text{Equation 3-2}$$

Note: The above equation does not consider argon in air (about 0.9 percent, molecular weight of 37.7). A negative error of about 0.4 percent is introduced. The tester may opt to include argon in the analysis using procedures subject to approval of the Administrator.

7. Bibliography

1. Altshuller, A.P. Storage of Gases and Vapors in Plastic Bags. International Journal of Air and Water Pollution. 6:75-81. 1963.

2. Conner, William D. and J. S. Nader. Air Sampling with Plastic Bags. Journal of the American Industrial Hygiene Association. 25:291-297. 1964.

3. Burrell Manual for Gas Analysts, Seventh edition. Burrell Corporation, 2223 Fifth Avenue, Pittsburgh, Pa. 15219. 1951.

4. Mitchell, W.J. and M.R. Midgett. Field Reliability of the Orsat Analyzer. Journal of Air Pollution Control Association. 26:491-495. May 1976.

5. Shigehara, R.T., R.M. Neulicht, and W.S. Smith. Validating Orsat Analysis Data from Fossil Fuel-Fired Units. Stack Sampling News. 4(2):21-26. August, 1976.

DETERMINATION OF MOISTURE IN STACK GASES

METHOD 4

METHOD 4--DETERMINATION OF MOISTURE CONTENT IN STACK GASES

1. Principle and Applicability

1.1 Principle. A gas sample is extracted at a constant rate from the source; moisture is removed from the sample stream and determined either volumetrically or gravimetrically.

1.2 Applicability. This method is applicable for determining the moisture content of stack gas.

Two procedures are given. The first is a reference method, for accurate determinations of moisture content (such as are needed to calculate emission data). The second is an approximation method, which provides estimates of percent moisture to aid in setting isokinetic sampling rates prior to a pollutant emission measurement run. The approximation method described herein is only a suggested approach; alternative means for approximating the moisture content, e.g., drying tubes, wet bulb-dry bulb techniques, condensation techniques, stoichiometric calculations, previous experience, etc., are also acceptable.

The reference method is often conducted simultaneously with a pollutant emission measurement run; when it is, calculation of percent isokinetic, pollutant emission rate, etc., for the run shall be based upon the results of the reference method or its equivalent; these calculations shall not be based upon the results of the approximation method, unless the approximation method is shown, to the satisfaction of the Administrator, U. S. Environmental Protection Agency, to be capable of yielding results within 1 percent H_2O of the reference method.

Note: The reference method may yield questionable results when applied to saturated gas streams or to streams that contain water droplets. Therefore, when these conditions exist or are suspected, a second determination of the moisture content shall be made simultaneously with the reference method, as follows: Assume that the gas stream is saturated. Attach a temperature sensor [capable of measuring to $\pm$ 1° C (2° F)] to the reference method probe. Measure the stack gas temperature at each traverse point (see Section 2.2.1) during the reference method traverse; calculate the average stack gas temperature. Next, determine the moisture percentage, either by: (1) using a psychrometric chart and making appropriate corrections if stack pressure is different from that of the chart, or (2) using saturation vapor pressure tables. In cases where the psychrometric chart or the saturation vapor pressure tables are not applicable (based on evaluation of the process), alternate methods, subject to the approval of the Administrator, shall be used.

2. Reference Method

The procedure described in Method 5 for determining moisture content is acceptable as a reference method.

2.1 Apparatus. A schematic of the sampling train used in this reference method is shown in Figure 4-1. All components shall be maintained and calibrated according to the procedure outlined in Method 5.

2.1.1 Probe. The probe is constructed of stainless steel or glass tubing, sufficiently heated to prevent water condensation, and is equipped with a filter, either in-stack (e.g., a plug of glass

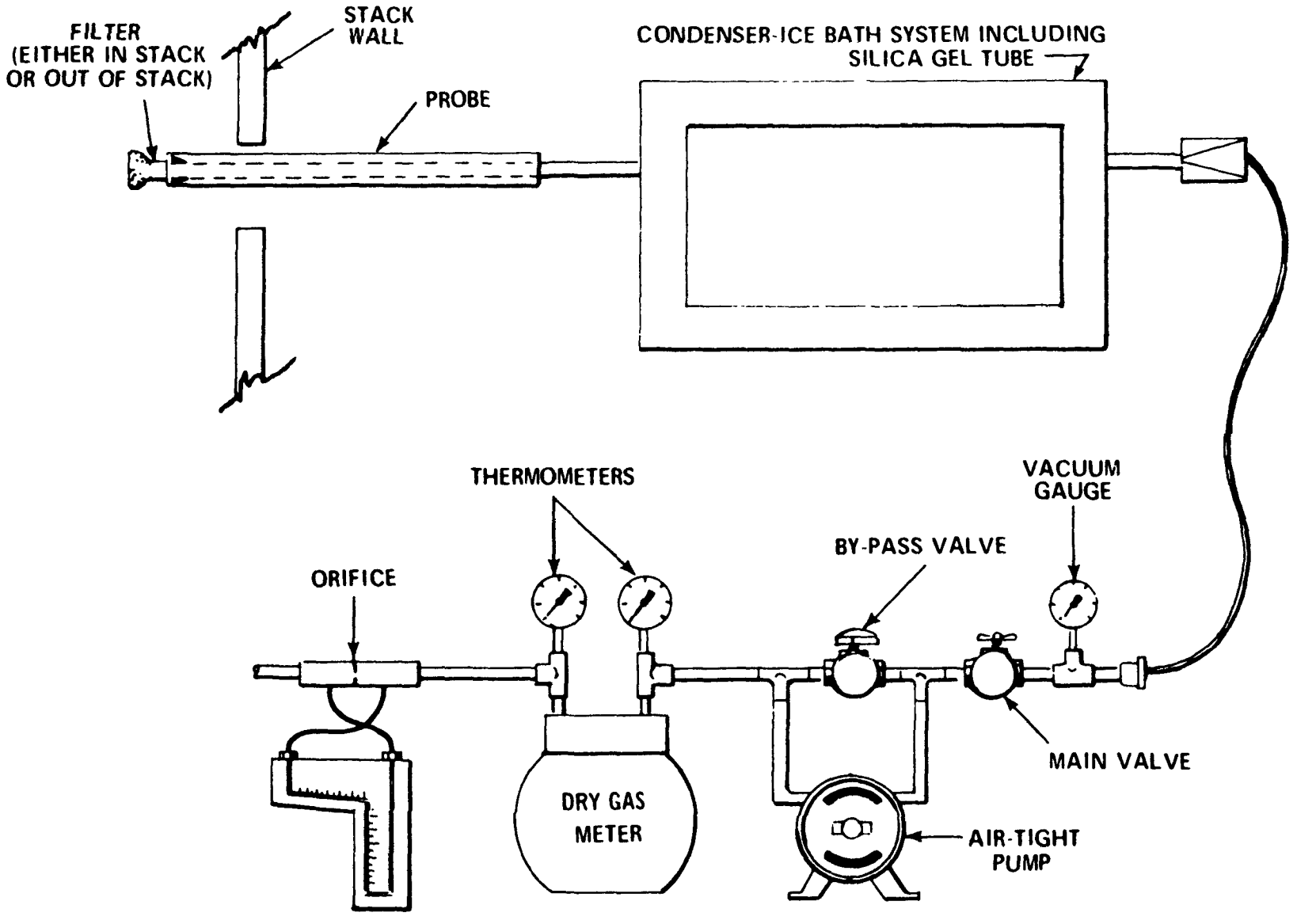

Figure 4-1. Moisture sampling train-reference method.

wool inserted into the end of the probe) or heated out-stack (e.g., as described in Method 5), to remove particulate matter.

When stack conditions permit, other metals or plastic tubing may be used for the probe, subject to the approval of the Administrator.

2.1.2 Condenser. The condenser consists of four impingers connected in series with ground glass, leak-free fittings or any similarly leak-free non-contaminating fittings. The first, third, and fourth impingers shall be of the Greenburg-Smith design, modified by replacing the tip with a 1.3 centimeter (1/2 inch) ID glass tube extending to about 1.3 cm (1/2 in.) from the bottom of the flask. The second impinger shall be of the Greenburg-Smith design with the standard tip. Modifications (e.g., using flexible connections between the impingers, using materials other than glass, or using flexible vacuum lines to connect the filter holder to the condenser) may be used, subject to the approval of the Administrator.

The first two impingers shall contain known volumes of water, the third shall be empty, and the fourth shall contain a known weight of 6- to 16-mesh indicating type silica gel, or equivalent desiccant. If the silica gel has been previously used, dry at 175°C (350°F) for 2 hours. New silica gel may be used as received. A thermometer, capable of measuring temperature to within 1°C (2°F), shall be placed at the outlet of the fourth impinger, for monitoring purposes.

Alternatively, any system may be used (subject to the approval of the Administrator) that cools the sample gas stream and allows

measurement of both the water that has been condensed and the moisture leaving the condenser, each to within 1 ml or 1 g. Acceptable means are to measure the condensed water, either gravimetrically or volumetrically, and to measure the moisture leaving the condenser by: (1) monitoring the temperature and pressure at the exit of the condenser and using Dalton's law of partial pressures, or (2) passing the sample gas stream through a tared silica gel (or equivalent desiccant) trap, with exit gases kept below 20°C (68°F), and determining the weight gain.

If means other than silica gel are used to determine the amount of moisture leaving the condenser, it is recommended that silica gel (or equivalent) still be used between the condenser system and pump, to prevent moisture condensation in the pump and metering devices and to avoid the need to make corrections for moisture in the metered volume.

2.1.3 Cooling System. An ice bath container and crushed ice (or equivalent) are used to aid in condensing moisture.

2.1.4 Metering System. This system includes a vacuum gauge, leak-free pump, thermometers capable of measuring temperature to within 3°C (5.4°F), dry gas meter capable of measuring volume to within 2 percent, and related equipment as shown in Figure 4-1. Other metering systems, capable of maintaining a constant sampling rate and determining sample gas volume, may be used, subject to the approval of the Administrator.

2.1.5 Barometer. Mercury, aneroid, or other barometer capable of measuring atmospheric pressure to within 2.5 mm Hg (0.1 in. Hg) may be used. In many cases, the barometric reading may be obtained from a nearby national weather service station, in which

case the station value (which is the absolute barometric pressure) shall be requested and an adjustment for elevation differences between the weather station and the sampling point shall be applied at a rate of minus 2.5 mm Hg (0.1 in. Hg) per 30 m (100 ft) elevation increase or vice versa for elevation decrease.

2.1.6 Graduated Cylinder and/or Balance. These items are used to measure condensed water and moisture caught in the silica gel to within 1 ml or 0.5 g. Graduated cylinders shall have subdivisions no greater than 2 ml. Most laboratory balances are capable of weighing to the nearest 0.5 g or less. These balances are suitable for use here.

2.2 Procedure. The following procedure is written for a condenser system (such as the impinger system described in Section 2.1.2) incorporating volumetric analysis to measure the condensed moisture, and silica gel and gravimetric analysis to measure the moisture leaving the condenser.

2.2.1 Unless otherwise specified by the Administrator, a minimum of eight traverse points shall be used for circular stacks having diameters less than 0.61 m (24 in.), a minimum of nine points shall be used for rectangular stacks having equivalent diameters less than 0.61 m (24 in.), and a minimum of twelve traverse points shall be used in all other cases. The traverse points shall be located according to Method 1. The use of fewer points is subject to the approval of the Administrator. Select a suitable probe and probe length such that all traverse points can be sampled. Consider sampling from opposite sides of the stack (four total sampling ports) for large stacks, to permit use of shorter probe lengths. Mark the probe with heat resistant tape or by some other method to

denote the proper distance into the stack or duct for each sampling point. Place known volumes of water in the first two impingers. Weigh and record the weight of the silica gel to the nearest 0.5 g, and transfer the silica gel to the fourth impinger; alternatively, the silica gel may first be transferred to the impinger, and the weight of the silica gel plus impinger recorded.

2.2.2 Select a total sampling time such that a minimum total gas volume of 0.60 scm (21 scf) will be collected, at a rate no greater than 0.021 m^3/min (0.75 cfm). When both moisture content and pollutant emission rate are to be determined, the moisture determination shall be simultaneous with, and for the same total length of time as, the pollutant emission rate run, unless otherwise specified in an applicable subpart of the standards.

2.2.3 Set up the sampling train as shown in Figure 4-1. Turn on the probe heater and (if applicable) the filter heating system to temperatures of about 120°C (248°F), to prevent water condensation ahead of the condenser; allow time for the temperatures to stabilize. Place crushed ice in the ice bath container. It is recommended, but not required, that a leak check be done, as follows: Disconnect the probe from the first impinger or (if applicable) from the filter holder. Plug the inlet to the first impinger (or filter holder) and pull a 380 mm (15 in.) Hg vacuum; a lower vacuum may be used, provided that it is not exceeded during the test. A leakage rate in excess of 4 percent of the average sampling rate or 0.00057 m^3/min (0.02 cfm), whichever is less, is unacceptable. Following the leak check, reconnect the probe to the sampling train.

2.2.4 During the sampling run, maintain a sampling rate within 10 percent of constant rate, or as specified by the Administrator. For each run, record the data required on the example data sheet shown in Figure 4-2. Be sure to record the dry gas meter reading at the beginning and end of each sampling time increment and whenever sampling is halted. Take other appropriate readings at each sample point, at least once during each time increment.

2.2.5 To begin sampling, position the probe tip at the first traverse point. Immediately start the pump and adjust the flow to the desired rate. Traverse the cross section, sampling at each traverse point for an equal length of time. Add more ice and, if necessary, salt to maintain a temperature of less than 20°C (68°F) at the silica gel outlet.

2.2.6 After collecting the sample, disconnect the probe from the filter holder (or from the first impinger) and conduct a leak check (mandatory) as described in Section 2.2.3. Record the leak rate. If the leakage rate exceeds the allowable rate, the tester shall either reject the test results or shall correct the sample volume as in Section 6.3 of Method 5. Next, measure the volume of the moisture condensed to the nearest ml. Determine the increase in weight of the silica gel (or silica gel plus impinger) to the nearest 0.5 g. Record this information (see example data sheet, Figure 4-3) and calculate the moisture percentage, as described in 2.3 below.

2.3 Calculations. Carry out the following calculations, retaining at least one extra decimal figure beyond that of the acquired data. Round off figures after final calculation.

PLANT _____

LOCATION _____

OPERATOR _____

DATE _____

RUN NO. _____

AMBIENT TEMPERATURE _____

BAROMETRIC PRESSURE _____

PROBE LENGTH m(ft) _____

SCHEMATIC OF STACK CROSS SECTION

TRAVERSE POINT NUMBER	SAMPLING TIME (θ), min.	STACK TEMPERATURE °C (°F)	PRESSURE DIFFERENTIAL ACROSS ORIFICE METER (ΔH), mm(in.) H_2O	METER READING GAS SAMPLE VOLUME m^3 (ft^3)	ΔV_m m^3 (ft^3)	GAS SAMPLE TEMPERATURE AT DRY GAS METER		TEMPERATURE OF GAS LEAVING CONDENSER OR LAST IMPINGER, °C (°F)
						INLET (Tm_{in}), °C (°F)	OUTLET (Tm_{out}), °C (°F)	
TOTAL						Avg.	Avg.	
AVERAGE						Avg.		

Figure 4-2. Field moisture determination-reference method.

	IMPINGER VOLUME, ml	SILICA GEL WEIGHT, g
FINAL		
INITIAL		
DIFFERENCE		

Figure 4-3. Analytical data - reference method.

2.3.1 Nomenclature.

B_{ws} = Proportion of water vapor, by volume, in the gas stream.

M_W = Molecular weight of water, 18.0 g/g-mole (18.0 lb/lb-mole).

P_m = Absolute pressure (for this method, same as barometric pressure) at the dry gas meter, mm Hg (in. Hg).

P_{std} = Standard absolute pressure, 760 mm Hg (29.92 in. Hg).

R = Ideal gas constant, 0.06236 (mm Hg)(m^3)/(g-mole)(°K) for metric units and 21.85 (in. Hg)(ft^3)/(lb-mole)(°R) for English units.

T_m = Absolute temperature at meter, °K (°R).

T_{std} = Standard absolute temperature, 293°K (528°R).

V_m = Dry gas volume measured by dry gas meter, dcm (dcf).

ΔV_m = Incremental dry gas volume measured by dry gas meter at each traverse point, dcm (dcf).

$V_{m(std)}$ = Dry gas volume measured by the dry gas meter, corrected to standard conditions, dscm (dscf).

$V_{wc(std)}$ = Volume of water vapor condensed corrected to standard conditions, scm (scf).

$V_{wsg(std)}$ = Volume of water vapor collected in silica gel corrected to standard conditions, scm (scf).

V_f = Final volume of condenser water, ml.

V_i = Initial volume, if any, of condenser water, ml.

W_f = Final weight of silica gel or silica gel plus impinger, g.

W_i = Initial weight of silica gel or silica gel plus impinger, g.

Y = Dry gas meter calibration factor.

ρ_w = Density of water, 0.9982 g/ml (0.002201 lb/ml).

2.3.2 Volume of water vapor condensed.

$$V_{wc(std)} = \frac{(V_f - V_i)\ \rho_w\ R\ T_{std}}{P_{std}\ M_w}$$

$$= K_1\ (V_f - V_i) \qquad \text{Equation 4-1}$$

where:

K_1 = 0.001333 m^3/ml for metric units

= 0.04707 ft^3/ml for English units

2.3.3 Volume of water vapor collected in silica gel.

$$V_{wsg(std)} = \frac{(W_f - W_i)\ \ R\ T_{std}}{P_{std}\ M_w}$$

$$= K_2\ (W_f - W_i) \qquad \text{Equation 4-2}$$

where:

K_2 = 0.001335 m^3/g for metric units

= 0.04715 ft^3/g for English units

2.3.4 Sample gas volume.

$$V_{m(std)} = V_m Y\ \frac{(P_m)\ (T_{std})}{(P_{std})\ (T_m)}$$

$$= K_3 Y\ \frac{V_m\ P_m}{T_m} \qquad \text{Equation 4-3}$$

where:

K_3 = 0.3858 °K/mm Hg for metric units

= 17.64 °R/in. Hg for English units

Note: If the post-test leak rate (Section 2.2.6) exceeds the allowable rate, correct the value of V_m in Equation 4-3, as described in Section 6.3 of Method 5.

2.3.5 Moisture Content.

$$B_{ws} = \frac{V_{wc(std)} + V_{wsg(std)}}{V_{wc(std)} + V_{wsg(std)} + V_{m(std)}} \qquad \text{Equation 4-4}$$

Note: In saturated or moisture droplet-laden gas streams, two calculations of the moisture content of the stack gas shall be made, one using a value based upon the saturated conditions (see Section 1.2), and another based upon the results of the impinger analysis. The lower of these two values of B_{ws} shall be considered correct.

2.3.6 Verification of constant sampling rate. For each time increment, determine the ΔV_m. Calculate the average. If the value for any time increment differs from the average by more than 10 percent, reject the results and repeat the run.

3. Approximation Method

The approximation method described below is presented only as a suggested method (see Section 1.2).

3.1 Apparatus.

3.1.1 Probe. Stainless steel or glass tubing, sufficiently heated to prevent water condensation and equipped with a filter (either in-stack or heated out-stack) to remove particulate matter. A plug of glass wool, inserted into the end of the probe, is a satisfactory filter.

3.1.2 Impingers. Two midget impingers, each with 30 ml capacity, or equivalent.

3.1.3 Ice Bath. Container and ice, to aid in condensing moisture in impingers.

3.1.4 Drying Tube. Tube packed with new or regenerated 6- to 16-mesh indicating-type silica gel (or equivalent desiccant), to dry the sample gas and to protect the meter and pump.

3.1.5 Valve. Needle valve, to regulate the sample gas flow rate.

3.1.6 Pump. Leak-free, diaphragm type, or equivalent, to pull the gas sample through the train.

3.1.7 Volume meter. Dry gas meter, sufficiently accurate to measure the sample volume within 2%, and calibrated over the range of flow rates and conditions actually encountered during sampling.

3.1.8 Rate Meter. Rotameter, to measure the flow range from 0. to 3 lpm (0. to 0.11 cfm).

3.1.9 Graduated Cylinder. 25 ml.

3.1.10 Barometer. Mercury, aneroid, or other barometer, as described in Section 2.1.5 above.

3.1.11 Vacuum Gauge. At least 760 mm Hg (30 in. Hg) gauge, to be used for the sampling leak check.

3.2 Procedure.

3.2.1 Place exactly 5 ml distilled water in each impinger. Leak check the sampling train as follows: Temporarily insert a vacuum gauge at or near the probe inlet; then, plug the probe inlet and pull a vacuum of at least 250 mm Hg (10 in. Hg). Note the time rate of change of the dry gas meter dial; alternatively, a rotameter (0-40 cc/min) may be temporarily attached to the dry gas meter outlet to determine the leakage rate. A leak rate not in excess of 2 percent of the average sampling rate is acceptable. Note: Carefully release the probe inlet plug before turning off the pump.

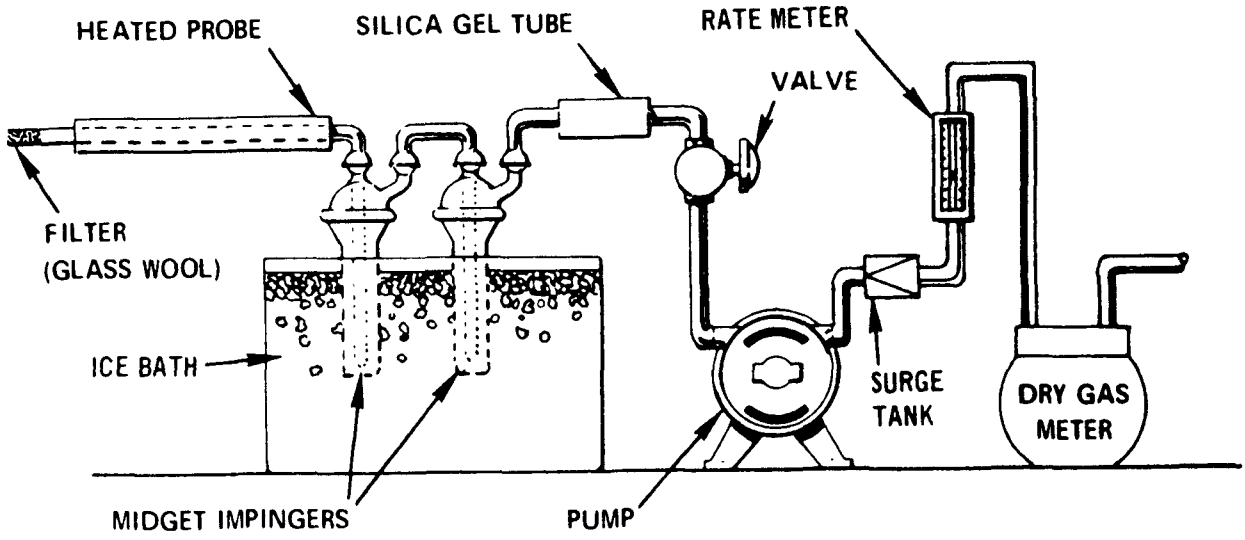

Figure 4-4. Moisture-sampling train - approximation method.

LOCATION _____ COMMENTS

TEST _____

DATE _____

OPERATOR _____

BAROMETRIC PRESSURE _____

CLOCK TIME	GAS VOLUME THROUGH METER, (Vm), m^3 (ft^3)	RATE METER SETTING m^3/min. (ft^3/min.)	METER TEMPERATURE, °C (°F)

Figure 4-5. Field moisture determination - approximation method.

3.2.2 Connect the probe, insert it into the stack, and sample at a constant rate of 2 lpm (0.071 cfm). Continue sampling until the dry gas meter registers about 30 liters (1.1 ft^3) or until visible liquid droplets are carried over from the first impinger to the second. Record temperature, pressure, and dry gas meter readings as required by Figure 4-5.

3.2.3 After collecting the sample, combine the contents of the two impingers and measure the volume to the nearest 0.5 ml.

3.3 Calculations. The calculation method presented is designed to estimate the moisture in the stack gas; therefore, other data, which are only necessary for accurate moisture determinations, are not collected. The following equations adequately estimate the moisture content, for the purpose of determining isokinetic sampling rate settings.

3.3.1 Nomenclature.

B_{wm} = Approximate proportion, by volume, of water vapor in the gas stream leaving the second impinger, 0.025.

B_{ws} = Water vapor in the gas stream, proportion by volume.

M_w = Molecular weight of water, 18.0 g/g-mole (18.0 lb/lb-mole)

P_m = Absolute pressure (for this method, same as barometric pressure) at the dry gas meter.

P_{std} = Standard absolute pressure, 760 mm Hg (29.92 in. Hg).

R = Ideal gas constant, 0.06236 (mm Hg)(m^3)/(g-mole)(°K) for metric units and 21.85 (in. Hg)(ft^3)/lb-mole)(°R) for English units.

T_m = Absolute temperature at meter, °K (°R).

T_{std} = Standard absolute temperature, 293°K (528°R).

V_f = Final volume of impinger contents, ml.

V_i = Initial volume of impinger contents, ml.

V_m = Dry gas volume measured by dry gas meter, dcm (dcf).

$V_{m(std)}$ = Dry gas volume measured by dry gas meter, corrected to standard conditions, dscm (dscf).

$V_{wc(std)}$ = Volume of water vapor condensed, corrected to standard conditions, scm (scf).

Y = Dry gas meter calibration factor.

ρ_w = Density of water, 0.9982 g/ml (0.002201 lb/ml).

3.3.2 Volume of water vapor collected.

$$V_{wc(std)} = \frac{(V_f - V_i)\ \rho_w\ R\ T_{std}}{P_{std}\ M_w}$$

$$= K_1\ (V_f - V_i) \qquad \text{Equation 4-5}$$

Where:

K_1 = 0.001333 m^3/ml for metric units.

= 0.04707 ft^3/ml for English units.

3.3.3 Gas Volume.

$$V_{m(std)} = V_m\ Y \left(\frac{P_m}{P_{std}}\right)\left(\frac{T_{std}}{T_m}\right) = K_2\ Y\ \frac{V_m\ P_m}{T_m}$$

Equation 4-6

where:

K_2 = 0.3858 °K/mm Hg for metric units.

= 17.64 °R/in. Hg for English units.

3.3.4 Approximate moisture content.

$$B_{ws} = \frac{V_{wc(std)}}{V_{wc(std)} + V_{m(std)}} + B_{wm} = \frac{V_{wc(std)}}{V_{wc(std)} + V_{m(std)}} + (0.025)$$

Equation 4-7

4. Calibration

4.1 For the reference method, calibrate equipment as specified in the following sections of Method 5: Section 5.3 (metering system); Section 5.5 (temperature gauges); and Section 5.7 (barometer). The recommended leak check of the metering system (Section 5.6 of Method 5) also applies to the reference method. For the approximation method, use the procedures outlined in Section 5.1.1 of Method 6 to calibrate the metering system, and the procedure of Method 5, Section 5.7 to calibrate the barometer.

5. Bibliography

1. Air Pollution Engineering Manual (Second Edition). Danielson, J. A. (ed.). U. S. Environmental Protection Agency, Office of Air Quality Planning and Standards. Research Triangle Park, N. C. Publication No. AP-40. 1973.

2. Devorkin, Howard, et al. Air Pollution Source Testing Manual. Air Pollution Control District, Los Angeles, Calif. November, 1963.

3. Methods for Determination of Velocity, Volume, Dust and Mist Content of Gases. Western Precipitation Division of Joy Manufacturing Co. Los Angeles, Calif. Bulletin WP-50. 1968.

DETERMINATION OF PARTICULATE EMISSIONS FROM STATIONARY SOURCES

METHOD 5

METHOD 5--DETERMINATION OF PARTICULATE EMISSIONS FROM STATIONARY SOURCES

1. Principle and Applicability

1.1 Principle. Particulate matter is withdrawn isokinetically from the source and collected on a glass fiber filter maintained at a temperature in the range of 120 ± 14°C (248 ± 25°F) or such other temperature as specified by an applicable subpart of the standards or approved by the Administrator, U. S. Environmental Protection Agency, for a particular application. The particulate mass, which includes any material that condenses at or above the filtration temperature, is determined gravimetrically after removal of uncombined water.

1.2 Applicability. This method is applicable for the determination of particulate emissions from stationary sources.

2. Apparatus

2.1 Sampling Train. A schematic of the sampling train used in this method is shown in Figure 5-1. Complete construction details are given in APTD-0581 (Citation 2 in Section 7); commercial models of this train are also available. For changes from APTD-0581 and for allowable modifications of the train shown in Figure 5-1, see the following subsections.

The operating and maintenance procedures for the sampling train are described in APTD-0576 (Citation 3 in Section 7). Since correct usage is important in obtaining valid results, all users should read APTD-0576 and adopt the operating and maintenance procedures outlined in it, unless otherwise specified herein. The sampling train consists of the following components:

2.1.1 Probe Nozzle. Stainless steel (316) or glass with sharp, tapered leading edge. The angle of taper shall be $\leq 30°$ and the taper shall be on the outside to preserve a constant internal diameter. The probe nozzle shall be of the button-hook or elbow design, unless otherwise specified by the Administrator. If made of stainless steel, the nozzle shall be constructed from seamless tubing; other materials of construction may be used, subject to the approval of the Administrator.

A range of nozzle sizes suitable for isokinetic sampling should be available, e.g., 0.32 to 1.27 cm (1/8 to 1/2 in.)--or larger if higher volume sampling trains are used--inside diameter (ID) nozzles in increments of 0.16 cm (1/16 in.). Each nozzle shall be calibrated according to the procedures outlined in Section 5.

2.1.2 Probe Liner. Borosilicate or quartz glass tubing with a heating system capable of maintaining a gas temperature at the exit end during sampling of 120 $\pm$ 14°C (248 $\pm$ 25°F), or such other temperature as specified by an applicable subpart of the standards or approved by the Administrator for a particular application. (The tester may opt to operate the equipment at a temperature lower than that specified.) Since the actual temperature at the outlet of the probe is not usually monitored during sampling, probes constructed according to APTD-0581 and utilizing the calibration curves of APTD-0576 (or calibrated according to the procedure outlined in APTD-0576) will be considered acceptable.

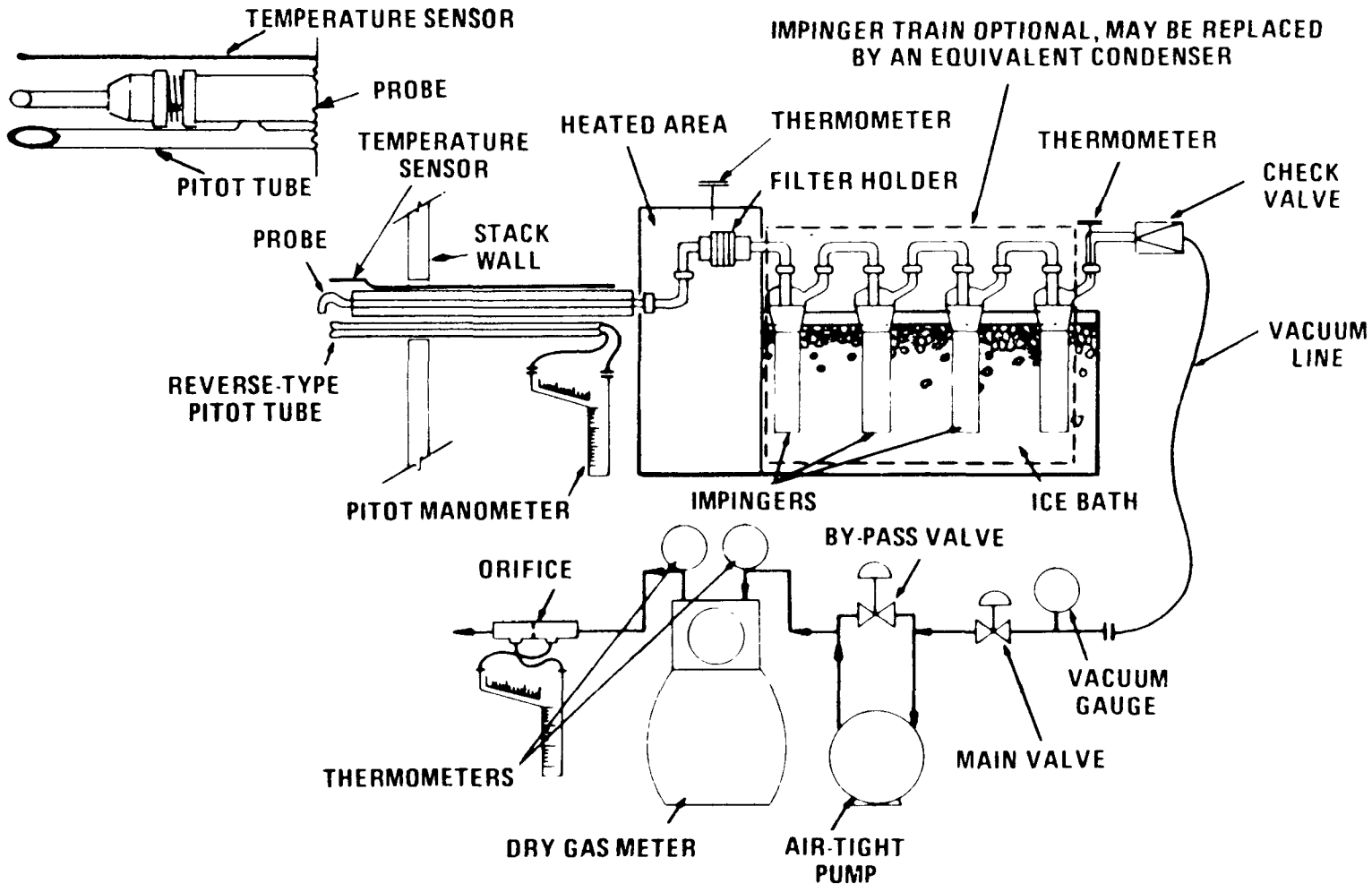

Figure 5 1. Particulate-sampling train.

Either borosilicate or quartz glass probe liners may be used for stack temperatures up to about 480°C (900°F); quartz liners shall be used for temperatures between 480 and 900°C (900 and 1650°F). Both types of liners may be used at higher temperatures than specified for short periods of time, subject to the approval of the Administrator. The softening temperature for borosilicate is 820°C (1508°F), and for quartz it is 1500°C (2732°F).

Whenever practical, every effort should be made to use borosilicate or quartz glass probe liners. Alternatively, metal liners (e.g., 316 stainless steel, Incoloy 825,[1] or other corrosion resistant metals) made of seamless tubing may be used, subject to the approval of the Administrator.

2.1.3 Pitot Tube. Type S, as described in Section 2.1 of Method 2, or other device approved by the Administrator. The pitot tube shall be attached to the probe (as shown in Figure 5-1) to allow constant monitoring of the stack gas velocity. The impact (high pressure) opening plane of the pitot tube shall be even with or above the nozzle entry plane (see Method 2, Figure 2-6b) during sampling. The Type S pitot tube assembly shall have a known coefficient, determined as outlined in Section 4 of Method 2.

2.1.4 Differential Pressure Gauge. Inclined manometer or equivalent device (two), as described in Section 2.2 of Method 2. One manometer shall be used for velocity head (Δp) readings, and the other, for orifice differential pressure readings.

---

[1]Mention of trade names or specific products does not constitute endorsement by the Environmental Protection Agency.

2.1.5 Filter Holder. Borosilicate glass, with a glass frit filter support and a silicone rubber gasket. Other materials of construction (e.g., stainless steel, Teflon, Viton) may be used, subject to the approval of the Administrator. The holder design shall provide a positive seal against leakage from the outside or around the filter. The holder shall be attached immediately at the outlet of the probe (or cyclone, if used).

2.1.6 Filter Heating System. Any heating system capable of maintaining a temperature around the filter holder during sampling of 120 ± 14°C (248 ± 25°F), or such other temperature as specified by an applicable subpart of the standards or approved by the Administrator for a particular application. Alternatively, the tester may opt to operate the equipment at a temperature lower than that specified. A temperature gauge capable of measuring temperature to within 3°C (5.4°F) shall be installed so that the temperature around the filter holder can be regulated and monitored during sampling. Heating systems other than the one shown in APTD-0581 may be used.

2.1.7 Condenser. The following system shall be used to determine the stack gas moisture content: Four impingers connected in series with leak-free ground glass fittings or any similar leak-free non-contaminating fittings. The first, third, and fourth impingers shall be of the Greenburg-Smith design, modified by replacing the tip with a 1.3 cm (1/2 in.) ID glass tube extending to about 1.3 cm (1/2 in.) from the bottom of the flask. The second impinger shall be of the Greenburg-Smith design with the standard tip. Modifications (e.g.,

using flexible connections between the impingers, using materials other than glass, or using flexible vacuum lines to connect the filter holder to the condenser) may be used, subject to the approval of the Administrator. The first and second impingers shall contain known quantities of water (Section 4.1.3), the third shall be empty, and the fourth shall contain a known weight of silica gel, or equivalent desiccant. A thermometer, capable of measuring temperature to within 1°C (2°F) shall be placed at the outlet of the fourth impinger for monitoring purposes.

Alternatively, any system that cools the sample gas stream and allows measurement of the water condensed and moisture leaving the condenser, each to within 1 ml or 1 g may be used, subject to the approval of the Administrator. Acceptable means are to measure the condensed water either gravimetrically or volumetrically and to measure the moisture leaving the condenser by: (1) monitoring the temperature and pressure at the exit of the condenser and using Dalton's law of partial pressures; or (2) passing the sample gas stream through a tared silica gel (or equivalent desiccant) trap with exit gases kept below 20°C (68°F) and determining the weight gain.

If means other than silica gel are used to determine the amount of moisture leaving the condenser, it is recommended that silica gel (or equivalent) still be used between the condenser system and pump to prevent moisture condensation in the pump and metering devices and to avoid the need to make corrections for moisture in the metered volume.

Note: If a determination of the particulate matter collected in the impingers is desired in addition to moisture content, the impinger system described above shall be used, without modification. Individual States or control agencies requiring this information shall be contacted as to the sample recovery and analysis of the impinger contents.

2.1.8 Metering System. Vacuum gauge, leak-free pump, thermometers capable of measuring temperature to within 3°C (5.4°F), dry gas meter capable of measuring volume to within 2 percent, and related equipment, as shown in Figure 5-1. Other metering systems capable of maintaining sampling rates within 10 percent of isokinetic and of determining sample volumes to within 2 percent may be used, subject to the approval of the Administrator. When the metering system is used in conjunction with a pitot tube, the system shall enable checks of isokinetic rates.

Sampling trains utilizing metering systems designed for higher flow rates than that described in APTD-0581 or APTD-0576 may be used provided that the specifications of this method are met.

2.1.9 Barometer. Mercury, aneroid, or other barometer capable of measuring atmospheric pressure to within 2.5 mm Hg (0.1 in. Hg). In many cases, the barometric reading may be obtained from a nearby national weather service station, in which case the station value (which is the absolute barometric pressure) shall be requested and an adjustment for elevation differences between the weather station and sampling point shall be applied at a rate of minus 2.5 mm Hg (0.1 in. Hg) per 30 m (100 ft) elevation increase or vice versa for elevation decrease.

2.1.10 Gas Density Determination Equipment. Temperature sensor and pressure gauge, as described in Sections 2.3 and 2.4 of Method 2, and gas analyzer, if necessary, as described in Method 3. The temperature sensor shall, preferably, be permanently attached to the pitot tube or sampling probe in a fixed configuration, such that the tip of the sensor extends beyond the leading edge of the probe sheath and does not touch any metal. Alternatively, the sensor may be attched just prior to use in the field. Note, however, that if the temperature sensor is attached in the field, the sensor must be placed in an interference-free arrangement with respect to the Type S pitot tube openings (see Method 2, Figure 2-7). As a second alternative, if a difference of not more than 1 percent in the average velocity measurement is to be introduced, the temperature gauge need not be attached to the probe or pitot tube. (This alternative is subject to the approval of the Administrator.)

2.2 Sample Recovery. The following items are needed:

2.2.1 Probe-Liner and Probe-Nozzle Brushes. Nylon bristle brushes with stainless steel wire handles. The probe brush shall have extensions (at least as long as the probe) of stainless steel, Nylon, Teflon, or similarly inert material. The brushes shall be properly sized and shaped to brush out the probe liner and nozzle.

2.2.2 Wash Bottles--Two. Glass wash bottles are recommended; polyethylene wash bottles may be used at the option of the tester. It is recommended that acetone not be stored in polyethylene bottles for longer than a month.

2.2.3 Glass Sample Storage Containers. Chemically resistant, borosilicate glass bottles, for acetone washes, 500 ml or 1000 ml. Screw cap liners shall either be rubber-backed Teflon or shall be constructed so as to be leak-free and resistant to chemical attack by acetone. (Narrow mouth glass bottles have been found to be less prone to leakage.) Alternatively, polyethylene bottles may be used.

2.2.4 Petri Dishes. For filter samples, glass or polyethylene, unless otherwise specified by the Administrator.

2.2.5 Graduated Cylinder and/or Balance. To measure condensed water to within 1 ml or 1 g. Graduated cylinders shall have subdivisions no greater than 2 ml. Most laboratory balances are capable of weighing to the nearest 0.5 g or less. Any of these balances is suitable for use here and in Section 2.3.4.

2.2.6 Plastic Storage Containers. Air-tight containers to store silica gel.

2.2.7 Funnel and Rubber Policeman. To aid in transfer of silica gel to container; not necessary if silica gel is weighed in the field.

2.2.8 Funnel. Glass or polyethylene, to aid in sample recovery.

2.3 Analysis. For analysis, the following equipment is needed:

2.3.1 Glass Weighing Dishes.

2.3.2 Desiccator.

2.3.3 Analytical Balance. To measure to within 0.1 mg.

2.3.4 Balance. To measure to within 0.5 g.

2.3.5 Beakers. 250 ml.

2.3.6 Hygrometer. To measure the relative humidity of the laboratory environment.

2.3.7 Temperature Gauge. To measure the temperature of the laboratory environment.

3. Reagents

3.1 Sampling. The reagents used in sampling are as follows:

3.1.1 Filters. Glass fiber filters, without organic binder, exhibiting at least 99.95 percent efficiency ($\leq$0.05 percent penetration) on 0.3-micron dioctyl phthalate smoke particles. The filter efficiency test shall be conducted in accordance with ASTM standard method D 2986-71. Test data from the supplier's quality control program are sufficient for this purpose.

3.1.2 Silica Gel. Indicating type, 6 to 16 mesh. If previously used, dry at 175°C (350°F) for 2 hours. New silica gel may be used as received. Alternatively, other types of desiccants (equivalent or better) may be used, subject to the approval of the Administrator.

3.1.3 Water. When analysis of the material caught in the impingers is required, distilled water shall be used. Run blanks prior to field use to eliminate a high blank on test samples.

3.1.4 Crushed Ice.

3.1.5 Stopcock Grease. Acetone-insoluble, heat-stable silicone grease. This is not necessary if screw-on connectors with Teflon sleeves, or similar, are used. Alternatively, other types of stopcock grease may be used, subject to the approval of the Administrator.

3.2 Sample Recovery. Acetone--reagent grade, $\leq$0.001 percent residue, in glass bottles--is required. Acetone from metal containers generally has a high residue blank and should not be used. Sometimes,

suppliers transfer acetone to glass bottles from metal containers; thus, acetone blanks shall be run prior to field use and only acetone with low blank values ($\leq$0.001 percent) shall be used. In no case shall a blank value of greater than 0.001 percent of the weight of acetone used be subtracted from the sample weight.

3.3 Analysis. Two reagents are required for the analysis:

3.3.1 Acetone. Same as 3.2.

3.3.2 Desiccant. Anhydrous calcium sulfate, indicating type. Alternatively, other types of desiccants may be used, subject to the approval of the Administrator.

4. Procedure

4.1 Sampling. The complexity of this method is such that, in order to obtain reliable results, testers should be trained and experienced with the test procedures.

4.1.1 Pretest Preparation. All the components shall be maintained and calibrated according to the procedure described in APTD-0576, unless otherwise specified herein.

Weigh several 200 to 300 g portions of silica gel in air-tight containers to the nearest 0.5 g. Record the total weight of the silica gel plus container, on each container. As an alternative, the silica gel need not be preweighed, but may be weighed directly in its impinger or sampling holder just prior to train assembly.

Check filters visually against light for irregularities and flaws or pinhole leaks. Label filters of the proper diameter on the back side near the edge using numbering machine ink. As an alternative,

label the shipping containers (glass or plastic petri dishes) and keep the filters in these containers at all times except during sampling and weighing.

Desiccate the filters at 20 ± 5.6°C (68 ± 10°F) and ambient pressure for at least 24 hours and weigh at intervals of at least 6 hours to a constant weight, i.e., ≤0.5 mg change from previous weighing; record results to the nearest 0.1 mg. During each weighing the filter must not be exposed to the laboratory atmosphere for a period greater than 2 minutes and a relative humidity above 50 percent. Alternatively (unless otherwise specified by the Administrator), the filters may be oven dried at 105°C (220°F) for 2 to 3 hours, desiccated for 2 hours, and weighed. Procedures other than those described, which account for relative humidity effects, may be used, subject to the approval of the Administrator.

4.1.2 Preliminary Determinations. Select the sampling site and the minimum number of sampling points according to Method 1 or as specified by the Administrator. Determine the stack pressure, temperature, and the range of velocity heads using Method 2; it is recommended that a leak-check of the pitot lines (see Method 2, Section 3.1) be performed. Determine the moisture content using Approximation Method 4 or its alternatives for the purpose of making isokinetic sampling rate settings. Determine the stack gas dry molecular weight, as described in Method 2, Section 3.6; if integrated Method 3 sampling is used for molecular weight determination, the integrated bag sample shall be taken simultaneously with, and for the same total length of time as, the particulate sample run.

Select a nozzle size based on the range of velocity heads, such that it is not necessary to change the nozzle size in order to maintain isokinetic sampling rates. During the run, do not change the nozzle size. Ensure that the proper differential pressure gauge is chosen for the range of velocity heads encountered (see Section 2.2 of Method 2).

Select a suitable probe liner and probe length such that all traverse points can be sampled. For large stacks, consider sampling from opposite sides of the stack to reduce the length of probes.

Select a total sampling time greater than or equal to the minimum total sampling time specified in the test procedures for the specific industry such that (1) the sampling time per point is not less than 2 min.(or some greater time interval as specified by the Administrator), and (2) the sample volume taken (corrected to standard conditions) will exceed the required minimum total gas sample volume. The latter is based on an approximate average sampling rate.

The sampling time at each point shall be the same. It is recommended that the number of minutes sampled at each point be an integer or an integer plus onehalf minute, in order to avoid timekeeping errors.

In some circumstances, e.g., batch cycles, it may be necessary to sample for shorter times at the traverse points and to obtain smaller gas sample volumes. In these cases, the Administrator's approval must first be obtained.

4.1.3 Preparation of Collection Train. During preparation and assembly of the sampling train, keep all openings where contamination

can occur covered until just prior to assembly or until sampling is about to begin.

Place 100 ml of water in each of the first two impingers, leave the third impinger empty, and transfer approximately 200 to 300 g of preweighed silica gel from its container to the fourth impinger. More silica gel may be used, but care should be taken to ensure that it is not entrained and carried out from the impinger during sampling. Place the container in a clean place for later use in the sample recovery. Alternatively, the weight of the silica gel plus impinger may be determined to the nearest 0.5 g and recorded.

Using a tweezer or clean disposable surgical gloves, place a labeled (identified) and weighed filter in the filter holder. Be sure that the filter is properly centered and the gasket properly placed so as to prevent the sample gas stream from circumventing the filter. Check the filter for tears after assembly is completed.

When glass liners are used, install the selected nozzle using a Viton A O-ring when stack temperatures are less than 260°C (500°F) and an asbestos string gasket when temperatures are higher. See APTD-0576 for details. Other connecting systems using either 316 stainless steel or Teflon ferrules may be used. When metal liners are used, install the nozzle as above or by a leak-free direct mechanical connection. Mark the probe with heat resistant tape or by some other method to denote the proper distance into the stack or duct for each sampling point.

Set up the train as in Figure 5-1, using (if necessary) a very light coat of silicone grease on all ground glass joints, greasing only the outer portion (see APTD-0576) to avoid possibility of contamination by the silicone grease. Subject to the approval of the Administrator, a glass cyclone may be used between the probe and filter holder when the total particulate catch is expected to exceed 100 mg or when water droplets are present in the stack gas.

Place crushed ice around the impingers.

4.1.4 Leak-Check Procedures.

4.1.4.1 Pretest Leak-Check. A pretest leak-check is recommended, but not required. If the tester opts to conduct the pretest leak-check, the following procedure shall be used.

After the sampling train has been assembled, turn on and set the filter and probe heating systems at the desired operating temperatures. Allow time for the temperatures to stabilize. If a Viton A O-ring or other leak-free connection is used in assembling the probe nozzle to the probe liner, leak-check the train at the sampling site by plugging the nozzle and pulling a 380 mm Hg (15 in. Hg) vacuum.

Note: A lower vacuum may be used, provided that it is not exceeded during the test.

If an asbestos string is used, do not connect the probe to the train during the leak-check. Instead, leak-check the train by first plugging the inlet to the filter holder (cyclone, if applicable) and pulling a 380 mm Hg (15 in. Hg) vacuum (see Note immediately above). Then connect the probe to the train and leak-check at about 25 mm Hg (1 in. Hg) vacuum; alternatively, the probe may be leak-checked with

the rest of the sampling train, in one step, at 380 mm Hg (15 in. Hg) vacuum. Leakage rates in excess of 4 percent of the average sampling rate or 0.00057 m^3/min (0.02 cfm), whichever is less, are unacceptable.

The following leak-check instructions for the sampling train described in APTD-0576 and APTD-0581 may be helpful. Start the pump with bypass valve fully open and coarse adjust valve completely closed. Partially open the coarse adjust valve and slowly close the bypass valve until the desired vacuum is reached. Do not reverse direction of bypass valve; this will cause water to back up into the filter holder. If the desired vacuum is exceeded, either leak-check at this higher vacuum or end the leak check as shown below and start over.

When the leak-check is completed, first slowly remove the plug from the inlet to the probe, filter holder, or cyclone (if applicable) and immediately turn off the vacuum pump. This prevents the water in the impingers from being forced backward into the filter holder and silica gel from being entrained backward into the third impinger.

4.1.4.2 Leak-Checks During Sample Run. If, during the sampling run, a component (e.g., filter assembly or impinger) change becomes necessary, a leak-check shall be conducted immediately before the change is made. The leak-check shall be done according to the procedure outlined in Section 4.1.4.1 above, except that it shall be done at a vacuum equal to or greater than the maximum value recorded up to that point in the test. If the leakage rate is found to be no greater than 0.00057 m^3/min (0.02 cfm) or 4 percent of the average sampling rate

(whichever is less), the results are acceptable, and no correction will need to be applied to the total volume of dry gas metered; if, however, a higher leakage rate is obtained, the tester shall either record the leakage rate and plan to correct the sample volume as shown in Section 6.3 of this method, or shall void the sampling run.

Immediately after component changes, leak-checks are optional; if such leak-checks are done, the procedure outlined in Section 4.1.4.1 above shall be used.

4.1.4.3 Post-test Leak-Check. A leak-check is mandatory at the conclusion of each sampling run. The leak-check shall be done in accordance with the procedures outlined in Section 4.1.4.1, except that it shall be conducted at a vacuum equal to or greater than the maximum value reached during the sampling run. If the leakage rate is found to be no greater than 0.00057 m^3/min (0.02 cfm) or 4 percent of the average sampling rate (whichever is less), the results are acceptable, and no correction need be applied to the total volume of dry gas metered. If, however, a higher leakage rate is obtained, the tester shall either record the leakage rate and correct the sample volume as shown in Section 6.3 of this method, or shall void the sampling run.

4.1.5 Particulate Train Operation. During the sampling run, maintain an isokinetic sampling rate (within 10 percent of true isokinetic unless otherwise specified by the Administrator) and a temperature around the filter of 120 $\pm$ 14°C (248 $\pm$ 25°F), or such other

temperature as specified by an applicable subpart of the standards or approved by the Administrator.

For each run, record the data required on a data sheet such as the one shown in Figure 5-2. Be sure to record the initial dry gas meter reading. Record the dry gas meter readings at the beginning and end of each sampling time increment, when changes in flow rates are made, before and after each leak check, and when sampling is halted. Take other readings required by Figure 5-2 at least once at each sample point during each time increment and additional readings when significant changes (20 percent variation in velocity head readings) necessitate additional adjustments in flow rate. Level and zero the manometer. Because the manometer level and zero may drift due to vibrations and temperature changes, make periodic checks during the traverse.

Clean the portholes prior to the test run to minimize the chance of sampling deposited material. To begin sampling, remove the nozzle cap, verify that the filter and probe heating systems are up to temperature, and that the pitot tube and probe are properly positioned. Position the nozzle at the first traverse point with the tip pointing directly into the gas stream. Immediately start the pump and adjust the flow to isokinetic conditions. Nomographs are available, which aid in the rapid adjustment of the isokinetic sampling rate without excessive computations. These nomographs are designed for use when the Type S pitot tube coefficient is 0.85 ± 0.02, and the stack gas equivalent density (dry molecular weight) is equal to 29 ± 4. APTD-0576 details the procedure for using the nomographs. If C_p and M_d are outside the above stated ranges, do not use the nomographs unless appropriate steps (see Citation 7 in Section 7) are taken to compensate for the deviations.

PLANT _____

LOCATION _____

OPERATOR _____

DATE _____

RUN NO _____

SAMPLE BOX NO _____

METER BOX NO. _____

METER $\Delta H@$ _____

C FACTOR _____

PITOT TUBE COEFFICIENT, C_p _____

SCHEMATIC OF STACK CROSS SECTION

AMBIENT TEMPERATURE _____

BAROMETRIC PRESSURE _____

ASSUMED MOISTURE, % _____

PROBE LENGTH, m (ft) _____

NOZZLE IDENTIFICATION NO _____

AVERAGE CALIBRATED NOZZLE DIAMETER, cm (in) _____

PROBE HEATER SETTING _____

LEAK RATE, m^3/min.(cfm) _____

PROBE LINER MATERIAL _____

STATIC PRESSURE, mm Hg (in.Hg) _____

FILTER NO. _____

TRAVERSE POINT NUMBER	SAMPLING TIME (θ), min.	VACUUM mm Hg (in Hg)	STACK TEMPERATURE (T_S) °C (°F)	VELOCITY HEAD (ΔP_S), mm(in)H_2O	PRESSURE DIFFERENTIAL ACROSS ORIFICE METER mm H_2O (in H_2O)	GAS SAMPLE VOLUME m^3 (ft^3)	GAS SAMPLE TEMPERATURE AT DRY GAS METER		FILTER HOLDER TEMPERATURE °C (°F)	TEMPERATURE OF GAS LEAVING CONDENSER OR LAST IMPINGER, °C (°F)
							INLET °C (°F)	OUTLET °C (°F)		
TOTAL							Avg.	Avg.		
AVERAGE							Avg.			

Figure 5-2. Particulate field data.

When the stack is under significant negative pressure (height of impinger stem), take care to close the coarse adjust valve before inserting the probe into the stack to prevent water from backing into the filter holder. If necessary, the pump may be turned on with the coarse adjust valve closed.

When the probe is in position, block off the openings around the probe and porthole to prevent unrepresentative dilution of the gas stream.

Traverse the stack cross-section, as required by Method 1 or as specified by the Administrator, being careful not to bump the probe nozzle into the stack walls when sampling near the walls or when removing or inserting the probe through the portholes; this minimizes the chance of extracting deposited material.

During the test run, make periodic adjustments to keep the temperature around the filter holder at the proper level; add more ice and, if necessary, salt to maintain a temperature of less than 20°C (68°F) at the condenser/silica gel outlet. Also, periodically check the level and zero of the manometer.

If the pressure drop across the filter becomes too high, making isokinetic sampling difficult to maintain, the filter may be replaced in the midst of a sample run. It is recommended that another complete filter assembly be used rather than attempting to change the filter itself. Before a new filter assembly is installed, conduct a leak-check (see Section 4.1.4.2). The total particulate weight shall include the summation of all filter assembly catches.

A single train shall be used for the entire sample run, except in cases where simultaneous sampling is required in two or more separate ducts or at two or more different locations within the same duct, or, in cases where equipment failure necessitates a change of trains. In all other situations, the use of two or more trains will be subject to the approval of the Administrator.

Note that when two or more trains are used, separate analyses of the front-half and (if applicable) impinger catches from each train shall be performed, unless identical nozzle sizes were used on all trains, in which case, the front-half catches from the individual trains may be combined (as may the impinger catches) and one analysis of front-half catch and one analysis of impinger catch may be performed. Consult with the Administrator for details concerning the calculation of results when two or more trains are used.

At the end of the sample run, turn off the coarse adjust valve, remove the probe and nozzle from the stack, turn off the pump, record the final dry gas meter reading, and conduct a post-test leak-check, as outlined in Section 4.1.4.3. Also, leak-check the pitot lines as described in Method 2, Section 3.1; the lines must pass this leak-check, in order to validate the velocity head data.

4.1.6 Calculation of Percent Isokinetic. Calculate percent isokinetic (see Calculations, Section 6) to determine whether the run was valid or another test run should be made. If there was difficulty in maintaining isokinetic rates due to source conditions, consult with the Administrator for possible variance on the isokinetic rates.

4.2 Sample Recovery. Proper cleanup procedure begins as soon as the probe is removed from the stack at the end of the sampling period. Allow the probe to cool.

When the probe can be safely handled, wipe off all external particulate matter near the tip of the probe nozzle and place a cap over it to prevent losing or gaining particulate matter. Do not cap off the probe tip tightly while the sampling train is cooling down as this would create a vacuum in the filter holder, thus drawing water from the impingers into the filter holder.

Before moving the sample train to the cleanup site, remove the probe from the sample train, wipe off the silicone grease, and cap the open outlet of the probe. Be careful not to lose any condensate that might be present. Wipe off the silicone grease from the filter inlet where the probe was fastened and cap it. Remove the umbilical cord from the last impinger and cap the impinger. If a flexible line is used between the first impinger or condenser and the filter holder, disconnect the line at the filter holder and let any condensed water or liquid drain into the impingers or condenser. After wiping off the silicone grease, cap off the filter holder outlet and impinger inlet. Either ground-glass stoppers, plastic caps, or serum caps may be used to close these openings.

Transfer the probe and filter-impinger assembly to the cleanup area. This area should be clean and protected from the wind so that the chances of contaminating or losing the sample will be minimized.

Save a portion of the acetone used for cleanup as a blank. Take 200 ml of this acetone directly from the wash bottle being used and place it in a glass sample container labeled "acetone blank."

Inspect the train prior to and during disassembly and note any abnormal conditions. Treat the samples as follows:

Container No. 1. Carefully remove the filter from the filter holder and place it in its identified petri dish container. Use a pair of tweezers and/or clean disposable surgical gloves to handle the filter. If it is necessary to fold the filter, do so such that the particulate cake is inside the fold. Carefully transfer to the petri dish any particulate matter and/or filter fibers which adhere to the filter holder gasket, by using a dry Nylon bristle brush and/or a sharp-edged blade. Seal the container.

Container No. 2. Taking care to see that dust on the outside of the probe or other exterior surfaces does not get into the sample, quantitatively recover particulate matter or any condensate from the probe nozzle, probe fitting, probe liner, and front half of the filter holder by washing these components with acetone and placing the wash in a glass container. Distilled water may be used instead of acetone when approved by the Administrator and shall be used when specified by the Administrator; in these cases, save a water blank and follow the Administrator's directions on analysis. Perform the acetone rinses as follows:

Carefully remove the probe nozzle and clean the inside surface by rinsing with acetone from a wash bottle and brushing with a Nylon bristle brush. Brush until the acetone rinse shows no visible particles, after which make a final rinse of the inside surface with acetone..

Brush and rinse the inside parts of the Swagelok fitting with acetone in a similar way until no visible particles remain.

Rinse the probe liner with acetone by tilting and rotating the probe while squirting acetone into its upper end so that all inside surfaces will be wetted with acetone. Let the acetone drain from the lower end into the sample container. A funnel (glass or polyethylene) may be used to aid in transferring liquid washes to the container. Follow the acetone rinse with a probe brush. Hold the probe in an inclined position, squirt acetone into the upper end as the probe brush is being pushed with a twisting action through the probe; hold a sample container underneath the lower end of the probe, and catch any acetone and particulate matter which is brushed from the probe. Run the brush through the probe three times or more until no visible particulate matter is carried out with the acetone or until none remains in the probe liner on visual inspection. With stainless steel or other metal probes, run the brush through in the above prescribed manner at least six times since metal probes have small crevices in which particulate matter can be entrapped. Rinse the brush with acetone, and quantitatively collect these washings in the sample container. After the brushing, make a final acetone rinse of the probe as described above.

It is recommended that two people be used to clean the probe to minimize sample losses. Between sampling runs, keep brushes clean and protected from contamination.

After ensuring that all joints have been wiped clean of silicone grease, clean the inside of the front half of the filter holder by rubbing the surfaces with a Nylon bristle brush and rinsing with acetone. Rinse each surface three times or more if needed to remove visible particulate. Make a final rinse of the brush and filter holder. Carefully rinse out the glass cyclone, also (if applicable). After all acetone washings and particulate matter have been collected in the sample container, tighten the lid on the sample container so that acetone will not leak out when it is shipped to the laboratory. Mark the height of the fluid level to determine whether or not leakage occurred during transport. Label the container to clearly identify its contents.

Container No. 3. Note the color of the indicating silica gel to determine if it has been completely spent and make a notation of its condition. Transfer the silica gel from the fourth impinger to its original container and seal. A funnel may make it easier to pour the silica gel without spilling. A rubber policeman may be used as an aid in removing the silica gel from the impinger. It is not necessary to remove the small amount of dust particles that may adhere to the impinger wall and are difficult to remove. Since the gain in weight is to be used for moisture calculations, do not use any water

or other liquids to transfer the silica gel. If a balance is available in the field, follow the procedure for container No. 3 in Section 4.3.

Impinger Water. Treat the impingers as follows: Make a notation of any color or film in the liquid catch. Measure the liquid which is in the first three impingers to within ±1 ml by using a graduated cylinder or by weighing it to within ±0.5 g by using a balance (if one is available). Record the volume or weight of liquid present. This information is required to calculate the moisture content of the effluent gas.

Discard the liquid after measuring and recording the volume or weight, unless analysis of the impinger catch is required (see Note, Section 2.1.7).

If a different type of condenser is used, measure the amount of moisture condensed either volumetrically or gravimetrically.

Whenever possible, containers should be shipped in such a way that they remain upright at all times.

4.3 Analysis. Record the data required on a sheet such as the one shown in Figure 5-3. Handle each sample container as follows:

Container No. 1. Leave the contents in the shipping container or transfer the filter and any loose particulate from the sample container to a tared glass weighing dish. Desiccate for 24 hours in a desiccator containing anhydrous calcium sulfate. Weigh to a constant weight and report the results to the nearest 0.1 mg. For purposes of this Section, 4.3, the term "constant weight" means

Plant _____

Date _____

Run No. _____

Filter No. _____

Amount liquid lost during transport _____

Acetone blank volume, ml _____

Acetone wash volume, ml _____

Acetone blank concentration, mg/mg (equation 5-4) _____

Acetone wash blank, mg (equation 5-5) _____

CONTAINER NUMBER	WEIGHT OF PARTICULATE COLLECTED, mg		
	FINAL WEIGHT	TARE WEIGHT	WEIGHT GAIN
1			
2			
TOTAL			
	Less acetone blank		
	Weight of particulate matter		

	VOLUME OF LIQUID WATER COLLECTED		
	IMPINGER VOLUME, ml	SILICA GEL WEIGHT, g	
FINAL			
INITIAL			
LIQUID COLLECTED			
TOTAL VOLUME COLLECTED		g*	ml

*CONVERT WEIGHT OF WATER TO VOLUME BY DIVIDING TOTAL WEIGHT INCREASE BY DENSITY OF WATER (1g/ml).

$$\frac{\text{INCREASE, g}}{\text{1 g/ml}} = \text{VOLUME WATER, ml}$$

Figure 5-3. Analytical data.

a difference of no more than 0.5 mg or 1 percent of total weight less tare weight, whichever is greater, between two consecutive weighings, with no less than 6 hours of desiccation time between weighings.

Alternatively, the sample may be oven dried at 105°C (220°F) for 2 to 3 hours, cooled in the desiccator, and weighed to a constant weight, unless otherwise specified by the Administrator. The tester may also opt to oven dry the sample at 105°C (220°F) for 2 to 3 hours, weigh the sample, and use this weight as a final weight.

Container No. 2. Note the level of liquid in the container and confirm on the analysis sheet whether or not leakage occurred during transport. If a noticeable amount of leakage has occurred, either void the sample or use methods, subject to the approval of the Administrator, to correct the final results. Measure the liquid in this container either volumetrically to ±1 ml or gravimetrically to ±0.5 g. Transfer the contents to a tared 250-ml beaker and evaporate to dryness at ambient temperature and pressure. Desiccate for 24 hours and weigh to a constant weight. Report the results to the nearest 0.1 mg.

Container No. 3. Weigh the spent silica gel (or silica gel plus impinger) to the nearest 0.5 g using a balance. This step may be conducted in the field.

"Acetone Blank" Container. Measure acetone in this container either volumetrically or gravimetrically. Transfer the acetone to a tared 250-ml beaker and evaporate to dryness at ambient temperature and pressure. Desiccate for 24 hours and weigh to a constant weight. Report the results to the nearest 0.1 mg.

Note: At the option of the tester, the contents of Container No. 2 as well as the acetone blank container may be evaporated at temperatures higher than ambient. If evaporation is done at an elevated temperature, the temperature must be below the boiling point of the solvent; also, to prevent "bumping," the evaporation process must be closely supervised, and the contents of the beaker must be swirled occasionally to maintain an even temperature. Use extreme care, as acetone is highly flammable and has a low flash point.

5. Calibration

Maintain a laboratory log of all calibrations.

5.1 Probe Nozzle. Probe nozzles shall be calibrated before their initial use in the field. Using a micrometer, measure the inside diameter of the nozzle to the nearest 0.025 mm (0.001 in.). Make three separate measurements using different diameters each time, and obtain the average of the measurements. The difference between the high and low numbers shall not exceed 0.1 mm (0.004 in.). When nozzles become nicked, dented, or corroded, they shall be reshaped, sharpened, and recalibrated before use. Each nozzle shall be permanently and uniquely identified.

5.2 Pitot Tube. The Type S pitot tube assembly shall be calibrated according to the procedure outlined in Section 4 of Method 2.

5.3 Metering System. Before its initial use in the field, the metering system shall be calibrated according to the procedure outlined in APTD-0576. Instead of physically adjusting the dry gas meter dial readings to correspond to the wet test meter readings, calibration factors may be used to mathematically correct the gas meter dial readings to the proper values. Before calibrating the metering system, it is suggested that a leak-check be conducted. For metering systems having diaphragm

pumps, the normal leak-check procedure will not detect leakages within the pump. For these cases the following leak-check procedure is suggested: make a 10-minute calibration run at 0.00057 m^3/min (0.02 cfm); at the end of the run, take the difference of the measured wet test meter and dry gas meter volumes; divide the difference by 10, to get the leak rate. The leak rate should not exceed 0.00057 m^3/min (0.02 cfm).

After each field use, the calibration of the metering system shall be checked by performing three calibration runs at a single, intermediate orifice setting (based on the previous field test), with the vacuum set at the maximum value reached during the test series. To adjust the vacuum, insert a valve between the wet test meter and the inlet of the metering system. Calculate the average value of the calibration factor. If the calibration has changed by more than 5 percent, recalibrate the meter over the full range of orifice settings, as outlined in APTD-0576.

Alternative procedures, e.g., using the orifice meter coefficients, may be used, subject to the approval of the Administrator.

Note: If the dry gas meter coefficient values obtained before and after a test series differ by more than 5 percent, the test series shall either be voided, or calculations for the test series shall be performed using whichever meter coefficient value (i.e., before or after) gives the lower value of total sample volume.

5.4 Probe Heater Calibration. The probe heating system shall be calibrated before its initial use in the field according to the procedure outlined in APTD-0576. Probes constructed according to APTD-0581 need not be calibrated if the calibration curves in APTD-0576 are used.

5.5 Temperature Gauges. Use the procedure in Section 4.3 of Method 2 to calibrate in-stack temperature gauges. Dial thermometers,

such as are used for the dry gas meter and condenser outlet, shall be calibrated against mercury-in-glass thermometers.

5.6 Leak Check of Metering System Shown in Figure 5-1. That portion of the sampling train from the pump to the orifice meter should be leak checked prior to initial use and after each shipment. Leakage after the pump will result in less volume being recorded than is actually sampled. The following procedure is suggested (see Figure 5-4): Close the main valve on the meter box. Insert a one-hole rubber stopper with rubber tubing attached into the orifice exhaust pipe. Disconnect and vent the low side of the orifice manometer. Close off the low side orifice tap. Pressurize the system to 13 to 18 cm (5 to 7 in.) water column by blowing into the rubber tubing. Pinch off the tubing and observe the manometer for one minute. A loss of pressure on the manometer indicates a leak in the meter box; leaks, if present, must be corrected.

5.7 Barometer. Calibrate against a mercury barometer.

6. Calculations

Carry out calculations, retaining at least one extra decimal figure beyond that of the acquired data. Round off figures after the final calculation. Other forms of the equations may be used as long as they give equivalent results.

6.1 Nomenclature.

A_n = Cross-sectional area of nozzle, m^2 (ft^2).

B_{ws} = Water vapor in the gas stream, proportion by volume.

C_a = Acetone blank residue concentration, mg/g.

c_s = Concentration of particulate matter in stack gas, dry basis, corrected to standard conditions, g/dscm (g/dscf).

I = Percent of isokinetic sampling.

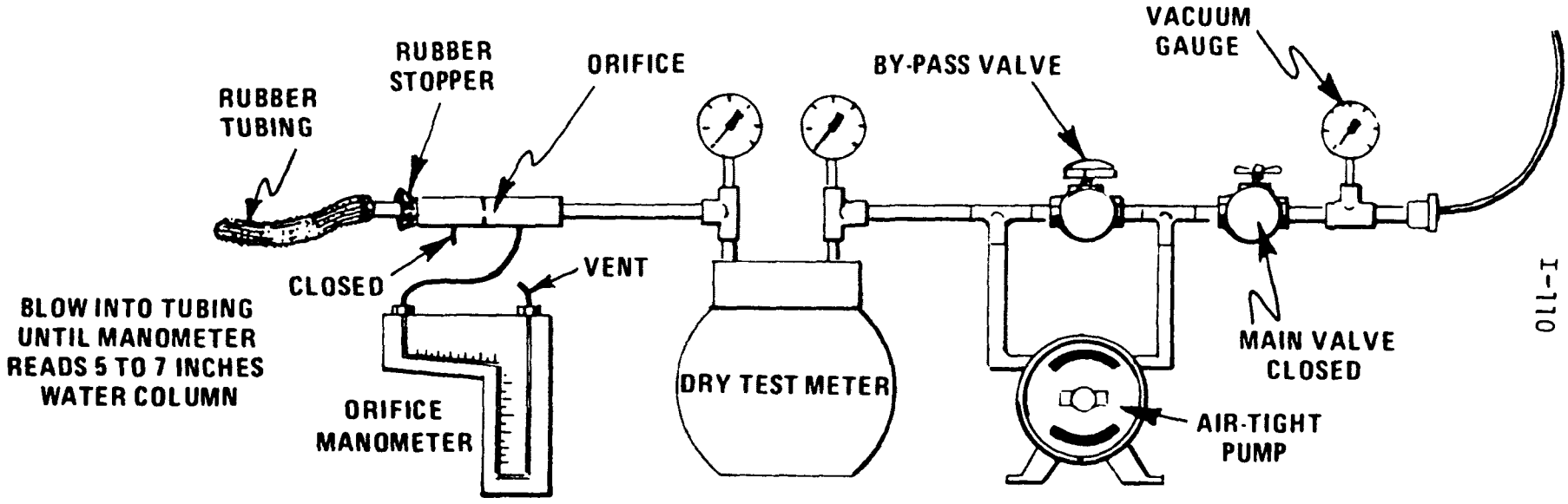

Figure 5-4. Leak check of meter box.

L_a = Maximum acceptable leakage rate for either a pretest leak check or for a leak check following a component change; equal to 0.00057 m^3/min (0.02 cfm) or 4 percent of the average sampling rate, whichever is less.

L_i = Individual leakage rate observed during the leak check conducted prior to the "i^{th}" component change (i = 1, 2, 3....n), m^3/min (cfm).

L_p = Leakage rate observed during the post-test leak check, m^3/min (cfm).

m_n = Total amount of particulate matter collected, mg.

M_w = Molecular weight of water, 18.0 g/g-mole (18.0 lb/lb-mole).

m_a = Mass of residue of acetone after evaporation, mg.

P_{bar} = Barometric pressure at the sampling site, mm Hg (in. Hg).

P_s = Absolute stack gas pressure, mm Hg (in. Hg).

P_{std} = Standard absolute pressure, 760 mm Hg (29.92 in. Hg).

R = Ideal gas constant, 0.06236 mm Hg-m^3/°K-g-mole (21.85 in. Hg-ft^3/°R-lb-mole).

T_m = Absolute average dry gas meter temperature (see Figure 5-2), °K (°R).

T_s = Absolute average stack gas temperature (see Figure 5-2), °K (°R).

T_{std} = Standard absolute temperature, 293°K (528°R).

V_a = Volume of acetone blank, ml.

V_{aw} = Volume of acetone used in wash, ml.

V_{lc} = Total volume of liquid collected in impingers and silica gel (see Figure 5-3), ml.

V_m = Volume of gas sample as measured by dry gas meter, dcm (dcf).

$V_{m(std)}$ = Volume of gas sample measured by the dry gas meter, corrected to standard conditions, dscm (dscf).

$V_{w(std)}$ = Volume of water vapor in the gas sample, corrected to standard conditions, scm (scf).

v_s = Stack gas velocity, calculated by Method 2, Equation 2-9, using data obtained from Method 5, m/sec (ft/sec).

W_a = Weight of residue in acetone wash, mg.

Y = Dry gas meter calibration factor.

ΔH = Average pressure differential across the orifice meter (see Figure 5-2), mm H_2O (in. H_2O).

ρ_a = Density of acetone, mg/ml (see label on bottle).

ρ_w = Density of water, 0.9982 g/ml (0.002201 lb/ml).

θ = Total sampling time, min.

θ_1 = Sampling time interval, from the beginning of a run until the first component change, min.

θ_i = Sampling time interval, between two successive component changes, beginning with the interval between the first and second changes, min.

θ_p = Sampling time interval, from the final (n^{th}) component change until the end of the sampling run, min.

13.6 = Specific gravity of mercury.

60 = Sec/min.

100 = Conversion to percent.

6.2 Average dry gas meter temperature and average orifice pressure drop. See data sheet (Figure 5-2).

6.3 Dry Gas Volume. Correct the sample volume measured by the dry gas meter to standard conditions (20°C, 760 mm Hg or 68°F, 29.92 in. Hg) by using Equation 5-1.

$$V_{m(std)} = V_m Y \left(\frac{T_{std}}{T_m}\right)\left[\frac{P_{bar} + \frac{\Delta H}{13.6}}{P_{std}}\right] = K_1 V_m Y \frac{P_{bar} + (\Delta H/13.6)}{T_m}$$

Equation 5-1

where:

K_1 = 0.3858 °K/mm Hg for metric units

= 17.64 °R/in. Hg for English units

Note: Equation 5-1 can be used as written unless the leakage rate observed during any of the mandatory leak checks (i.e., the post-test leak check or leak checks conducted prior to component changes) exceeds L_a. If L_p or L_i exceeds L_a, Equation 5-1 must be modified as follows:

(a) Case I. No component changes made during sampling run. In this case, replace V_m in Equation 5-1 with the expression:

$$[V_m - (L_p - L_a)\,\theta]$$

(b) Case II. One or more component changes made during the sampling run. In this case, replace V_m in Equation 5-1 by the expression:

$$[V_m - (L_1 - L_a)\,\theta_1 - \sum_{i=2}^{n} (L_i - L_a)\,\theta_i - (L_p - L_a)\,\theta_p]$$

and substitute only for those leakage rates (L_i or L_p) which exceed L_a.

6.4 Volume of water vapor.

$$V_{w(std)} = V_{1c}\left(\frac{\rho_w}{M_w}\right)\left(\frac{RT_{std}}{P_{std}}\right) = K_2\,V_{1c} \qquad \text{Equation 5-2}$$

where:

K_2 = 0.001333 m^3/ml for metric units

= 0.04707 ft^3/ml for English units.

6.5 Moisture Content.

$$B_{ws} = \frac{V_{w(std)}}{V_{m(std)} + V_{w(std)}} \qquad \text{Equation 5-3}$$

Note: In saturated or water droplet-laden gas streams, two calculations of the moisture content of the stack gas shall be made, one from the impinger analysis (Equation 5-3), and a second from the assumption of saturated conditions. The lower of the two values of B_{ws} shall be considered correct. The procedure for determining the moisture content based upon assumption of saturated conditions is given in the Note of Section 1.2 of Method 4. For the purposes of this method, the average stack gas temperature from Figure 5-2 may be used to make this determination, provided that the accuracy of the in-stack temperature sensor is $\pm$ 1°C (2°F).

6.6 Acetone Blank Concentration.

$$C_a = \frac{m_a}{V_a \rho_a}$$ Equation 5-4

6.7 Acetone Wash Blank.

$$W_a = C_a V_{aw} \rho_a$$ Equation 5-5

6.8 Total Particulate Weight. Determine the total particulate catch from the sum of the weights obtained from containers 1 and 2 less the acetone blank (see Figure 5-3). Note: Refer to Section 4.1.5 to assist in calculation of results involving two or more filter assemblies or two or more sampling trains.

6.9 Particulate Concentration.

$$c_s = (0.001 \text{ g/mg}) \ (m_n/V_{m(std)})$$ Equation 5-6

6.10 Conversion Factors:

From	To	Multiply by
scf	m^3	0.02832
g/ft^3	gr/ft^3	15.43
g/ft^3	lb/ft^3	2.205×10^{-3}
g/ft^3	g/m^3	35.31

6.11 Isokinetic Variation.

6.11.1 Calculation From Raw Data.

$$I = \frac{100 \ T_s \ [K_3 \ V_{1c} + (V_m \ Y/T_m) \ (P_{bar} + \Delta H/13.6)]}{60 \ \theta \ v_s \ P_s \ A_n}$$

Equation 5-7

where:

K_3 = 0.003454 mm Hg-m^3/ml-°K for metric units

= 0.002669 in. Hg-ft^3/ml-°R for English units.

6.11.2 Calculation From Intermediate Values.

$$I = \frac{T_s V_{m(std)} P_{std} 100}{T_{std} v_s \theta A_n P_s 60 (1-B_{ws})}$$

$$= K_4 \frac{T_s V_{m(std)}}{P_s v_s A_n \theta (1-B_{ws})} \qquad \text{Equation 5-8}$$

where:

K_4 = 4.320 for metric units

= 0.09450 for English units.

6.12 Acceptable Results. If 90 percent $\leq$ I $\leq$ 110 percent, the results are acceptable. If the results are low in comparison to the standard and I is beyond the acceptable range, or, if I is less than 90 percent, the Administrator may opt to accept the results. Use Citation 4 to make judgments. Otherwise, reject the results and repeat the test.

7. Bibliography

1. Addendum to Specifications for Incinerator Testing at Federal Facilities. PHS, NCAPC. Dec. 6, 1967.

2. Martin, Robert M. Construction Details of Isokinetic Source-Sampling Equipment. Environmental Protection Agency. Research Triangle Park, N. C. APTD-0581. April, 1971.

3. Rom, Jerome J. Maintenance, Calibration, and Operation of Isokinetic Source Sampling Equipment. Environmental Protection Agency. Research Triangle Park, N. C. APTD-0576. March, 1972.

4. Smith, W. S., R. T. Shigehara, and W. F. Todd. A Method of Interpreting Stack Sampling Data. Paper Presented at the 63d Annual Meeting of the Air Pollution Control Association, St. Louis, Mo. June 14-19, 1970.

5. Smith, W. S., et al. Stack Gas Sampling Improved and Simplified With New Equipment. APCA Paper No. 67-119. 1967.

6. Specifications for Incinerator Testing at Federal Facilities. PHS, NCAPC. 1967.

7. Shigehara, R.T. Adjustments in the EPA Nomograph for Different Pitot Tube Coefficients and Dry Molecular Weights. Stack Sampling News 2:4-11. October, 1974.

8. Vollaro, R. F. A Survey of Commercially Available Instrumentation For the Measurement of Low-Range Gas Velocities. U. S. Environmental Protection Agency, Emission Measurement Branch. Research Triangle Park, N. C. November, 1976 (unpublished paper).

9. Annual Book of ASTM Standards. Part 26. Gaseous Fuels; Coal and Coke; Atmospheric Analysis. American Society for Testing and Materials. Philadelphia, Pa. 1974. pp. 617-622.

DETERMINATION OF SULFUR DIOXIDE EMISSIONS FROM STATIONARY SOURCES

METHOD 6

METHOD 6--DETERMINATION OF SULFUR DIOXIDE EMISSIONS FROM STATIONARY SOURCES

1. Principle and Applicability

1.1. Principle. A gas sample is extracted from the sampling point in the stack. The sulfuric acid mist (including sulfur trioxide) and the sulfur dioxide are separated. The sulfur dioxide fraction is measured by the barium-thorin titration method.

1.2 Applicability. This method is applicable for the determination of sulfur dioxide emissions from stationary sources. The minimum detectable limit of the method has been determined to be 3.4 milligrams (mg) of SO_2/m^3 (2.12×10^{-7} lb/ft^3). Although no upper limit has been established, tests have shown that concentrations as high as 80,000 mg/m^3 of SO_2 can be collected efficiently in two midget impingers, each containing 15 milliliters of 3 percent hydrogen peroxide, at a rate of 1.0 lpm for 20 minutes. Based on theoretical calculations, the upper concentration limit in a 20-liter sample is about 93,300 mg/m^3.

Possible interferents are free ammonia, water-soluble cations, and flubrides. The cations and fluorides are removed by glass wool filters and an isopropanol bubbler, and hence do not affect the SO_2 analysis. When samples are being taken from a gas stream with high concentrations of very fine metallic fumes (such as in inlets to control devices), a high-efficiency glass fiber filter must be used in place of the glass wool plug (i.e., the one in the probe) to remove the cation interferents.

Free ammonia interferes by reacting with SO_2 to form particulate sulfite and by reacting with the indicator. If free ammonia is

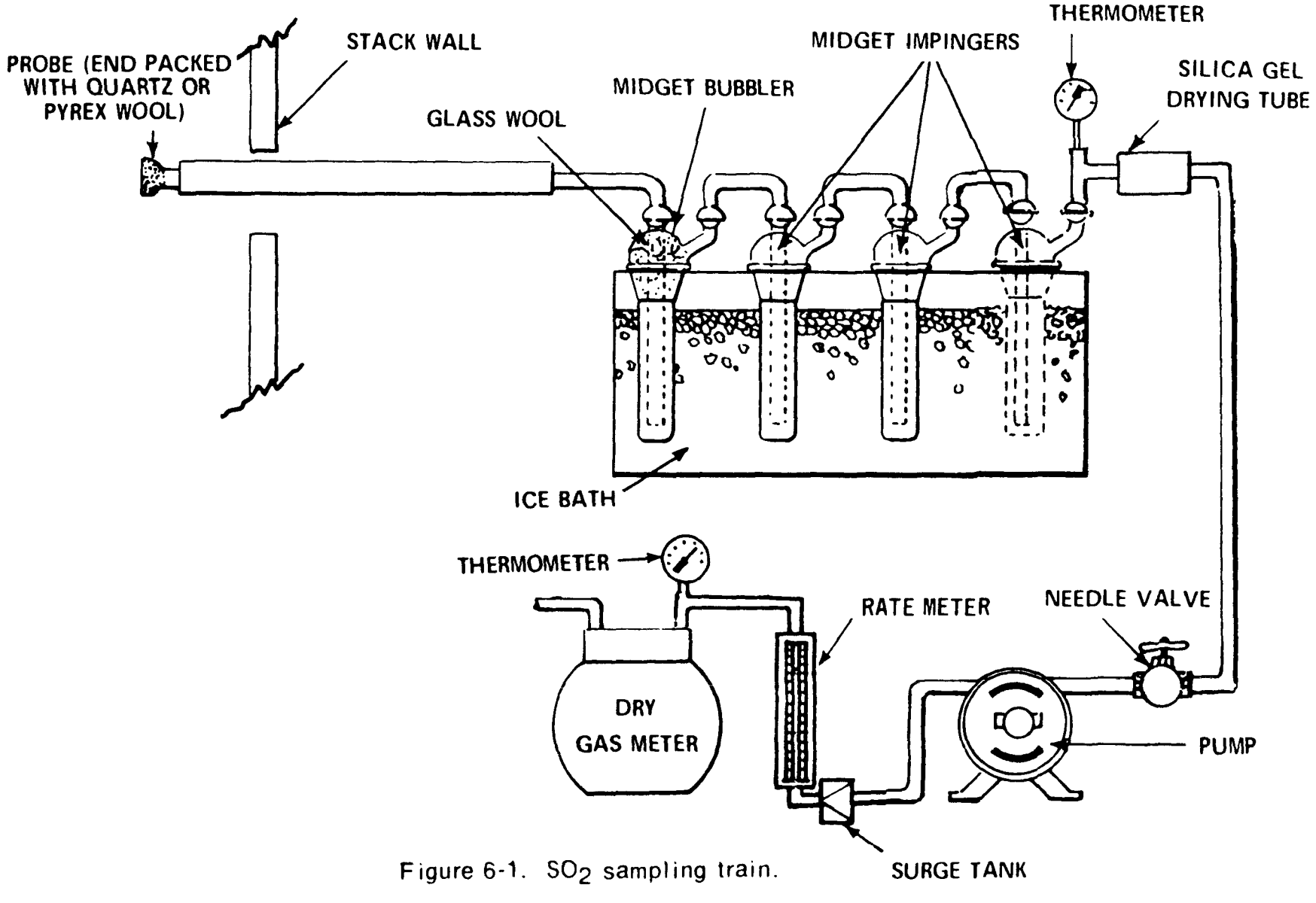

Figure 6-1. SO_2 sampling train.

present (this can be determined by knowledge of the process and noticing white particulate matter in the probe and isopropanol bubbler), alternative methods, subject to the approval of the Administrator, U. S. Environmental Protection Agency, are required.

2. Apparatus

2.1 Sampling. The sampling train is shown in Figure 6-1, and component parts are discussed below. The tester has the option of substituting sampling equipment described in Method 8 in place of the midget impinger equipment of Method 6. However, the Method 8 train must be modified to include a heated filter between the probe and isopropanol impinger, and the operation of the sampling train and sample analysis must be at the flow rates and solution volumes defined in Method 8.

The tester also has the option of determining SO_2 simultaneously with particulate matter and moisture determinations by (1) replacing the water in a Method 5 impinger system with 3 percent peroxide solution, or (2) by replacing the Method 5 water impinger system with a Method 8 isopropanol-filter-peroxide system. The analysis for SO_2 must be consistent with the procedure in Method 8.

2.1.1 Probe. Borosilicate glass, or stainless steel (other materials of construction may be used, subject to the approval of the Administrator), approximately 6-mm inside diameter, with a heating system to prevent water condensation and a filter (either in-stack or heated out-stack) to remove particulate matter, including sulfuric acid mist. A plug of glass wool is a satisfactory filter.

2.1.2 Bubbler and Impingers. One midget bubbler, with medium-coarse glass frit and borosilicate or quartz glass wool

packed in top (see Figure 6-1) to prevent sulfuric acid mist carryover, and three 30-ml midget impingers. The bubbler and midget impingers must be connected in series with leak-free glass connectors. Silicone grease may be used, if necessary, to prevent leakage.

At the option of the tester, a midget impinger may be used in place of the midget bubbler.

Other collection absorbers and flow rates may be used, but are subject to the approval of the Administrator. Also, collection efficiency must be shown to be at least 99 percent for each test run and must be documented in the report. If the efficiency is found to be acceptable after a series of three tests, further documentation is not required. To conduct the efficiency test, an extra absorber must be added and analyzed separately. This extra absorber must not contain more than 1 percent of the total SO_2.

2.1.3 Glass Wool. Borosilicate or quartz.

2.1.4 Stopcock Grease. Acetone-insoluble, heat-stable silicone grease may be used, if necessary.

2.1.5 Temperature Gauge. Dial thermometer, or equivalent, to measure temperature of gas leaving impinger train to within 1°C (2°F).

2.1.6 Drying Tube. Tube packed with 6- to 16-mesh indicating-type silica gel, or equivalent, to dry the gas sample and to protect the meter and pump. If the silica gel has been used previously, dry at 175°C (350°F) for 2 hours. New silica gel may be used as received. Alternatively, other types of desiccants (equivalent or better) may be used, subject to approval of the Administrator.

2.1.7 Valve. Needle valve, to regulate sample gas flow rate.

2.1.8 Pump. Leak-free diaphragm pump, or equivalent, to pull gas through the train. Install a small surge tank between the pump and rate meter to eliminate the pulsation effect of the diaphragm pump on the rotameter.

2.1.9 Rate Meter. Rotameter, or equivalent, capable of measuring flow rate to within 2 percent of the selected flow rate of about 1000 cc/min.

2.1.10 Volume Meter. Dry gas meter, sufficiently accurate to measure the sample volume within 2 percent, calibrated at the selected flow rate and conditions actually encountered during sampling, and equipped with a temperature gauge (dial thermometer, or equivalent) capable of measuring temperature to within 3°C (5.4°F).

2.1.11 Barometer. Mercury, aneroid, or other barometer capable of measuring atmospheric pressure to within 2.5 mm Hg (0.1 in. Hg). In many cases, the barometric reading may be obtained from a nearby national weather service station, in which case the station value (which is the absolute barometric pressure) shall be requested and an adjustment for elevation differences between the weather station and sampling point shall be applied at a rate of minus 2.5 mm Hg (0.1 in. Hg) per 30 m (100 ft) elevation increase or vice versa for elevation decrease.

2.1.12 Vacuum Gauge and Rotameter. At least 760 mm Hg (30 in. Hg) gauge and 0-40 cc/min rotameter, to be used for leak check of the sampling train.

2.2 Sample Recovery.

2.2.1 Wash Bottles. Polyethylene or glass, 500 ml, two.

2.2.2 Storage Bottles. Polyethylene, 100 ml, to store impinger samples (one per sample).

2.3 Analysis.

2.3.1 Pipettes. Volumetric type, 5-ml, 20-ml (one per sample), and 25-ml sizes.

2.3.2 Volumetric Flasks. 100-ml size (one per sample) and 1000-ml size.

2.3.3 Burettes. 5- and 50-ml sizes.

2.3.4 Erlenmeyer Flasks. 250 ml-size (one for each sample, blank, and standard).

2.3.5 Dropping Bottle. 125-ml size, to add indicator.

2.3.6 Graduated cylinder. 100-ml size.

2.3.7 Spectrophotometer. To measure absorbance at 352 nanometers.

3. Reagents

Unless otherwise indicated, all reagents must conform to the specifications established by the Committee on Analytical Reagents of the American Chemical Society. Where such specifications are not available, use the best available grade.

3.1 Sampling.

3.1.1 Water. Deionized, distilled to conform to ASTM specification D1193-74, Type 3. At the option of the analyst,

the $KMnO_4$ test for oxidizable organic matter may be omitted when high concentrations of organic matter are not expected to be present.

3.1.2 Isopropanol, 80 percent. Mix 80 ml of isopropanol with 20 ml of deionized, distilled water. Check each lot of isopropanol for peroxide impurities as follows: shake 10 ml of isopropanol with 10 ml of freshly prepared 10 percent potassium iodide solution. Prepare a blank by similarly treating 10 ml of distilled water. After 1 minute, read the absorbance at 352 nanometers on a spectrophotometer (Note: Use a 1-cm path length). If absorbance exceeds 0.1, reject alcohol for use.

Peroxides may be removed from isopropanol by redistilling or by passage through a column of activated alumina; however, reagent grade isopropanol with suitably low peroxide levels may be obtained from commercial sources. Rejection of contaminated lots may, therefore, be a more efficient procedure.

3.1.3 Hydrogen Peroxide, 3 Percent. Dilute 30 percent hydrogen peroxide 1:9 (v/v) with deionized, distilled water (30 ml is needed per sample). Prepare fresh daily.

3.1.4 Potassium Iodide Solution, 10 Percent. Dissolve 10.0 grams KI in deionized, distilled water and dilute to 100 ml. Prepare when needed.

3.2 Sample Recovery.

3.2.1 Water. Deionized, distilled, as in 3.1.1.

3.2.2 Isopropanol, 80 Percent. Mix 80 ml of isopropanol with 20 ml of deionized, distilled water.

3.3 Analysis.

3.3.1 Water. Deionized, distilled, as in 3.1.1.

3.3.2 Isopropanol, 100 percent.

3.3.3 Thorin Indicator. 1-(o-arsonophenylazo)-2-naphthol-3, 6-disulfonic acid, disodium salt, or equivalent. Dissolve 0.20 g in 100 ml of deionized, distilled water.

3.3.4 Barium Perchlorate Solution, 0.0100 N. Dissolve 1.95 g of barium perchlorate trihydrate [$Ba(ClO_4)_2 \cdot 3H_2O$] in 200 ml distilled water and dilute to 1 liter with isopropanol. Alternatively, 1.22 g of [$BaCl_2 \cdot 2H_2O$] may be used instead of the perchlorate. Standardize as in Section 5.5.

3.3.5 Sulfuric Acid Standard, 0.0100 N. Purchase or standardize to $\pm$0.0002 N against 0.0100 N NaOH which has previously been standardized against potassium acid phthalate (primary standard grade).

4. Procedure.

4.1 Sampling.

4.1.1 Preparation of collection train. Measure 15 ml of 80 percent isopropanol into the midget bubbler and 15 ml of 3 percent hydrogen peroxide into each of the first two midget impingers. Leave the final midget impinger dry. Assemble the train as shown in Figure 6-1. Adjust probe heater to a temperature sufficient to prevent water condensation. Place crushed ice and water around the impingers.

4.1.2 Leak-check procedure. A leak check prior to the sampling run is optional; however, a leak check after the sampling run is mandatory. The leak-check procedure is as follows:

Temporarily attach a suitable (e.g., 0-40 cc/min) rotameter to the outlet of the dry gas meter and place a vacuum gauge at or near the probe inlet. Plug the probe inlet, pull a vacuum of at least 250 mm Hg (10 in. Hg), and note the flow rate as indicated by the rotameter. A leakage rate not in excess of 2 percent of the average sampling rate is acceptable. Note: Carefully release the probe inlet plug before turning off the pump.

It is suggested (not mandatory) that the pump be leak-checked separately, either prior to or after the sampling run. If done prior to the sampling run, the pump leak-check shall precede the leak check of the sampling train described immediately above; if done after the sampling run, the pump leak-check shall follow the train leak-check. To leak check the pump, proceed as follows: Disconnect the drying tube from the probe-impinger assembly. Place a vacuum gauge at the inlet to either the drying tube or the pump, pull a vacuum of 250 mm (10 in.) Hg, plug or pinch off the outlet of the flow meter and then turn off the pump. The vacuum should remain stable for at least 30 seconds.

Other leak-check procedures may be used, subject to the approval of the Administrator, U.S. Environmental Protection Agency.

4.1.3 Sample Collection. Record the initial dry gas meter reading and barometric pressure. To begin sampling, position the tip of the probe at the sampling point, connect the probe to the bubbler, and start the pump. Adjust the sample flow to a constant rate of approximately 1.0 liter/min as indicated by the rotameter. Maintain this constant rate ($\pm$ 10 percent) during the entire sampling run. Take readings (dry gas meter, temperatures at dry gas meter and at impinger outlet and rate meter) at least every 5 minutes. Add more ice during the run to keep the temperature of the gases leaving the last impinger at 20°C (68°F) or less. At the conclusion of each run, turn off the pump, remove probe from the stack, and record the final readings. Conduct a leak check as in Section 4.1.2. (This leak check is mandatory.) If a leak is found, void the test run or use procedures acceptable to the Administrator to adjust the sample volume for leakage. Drain the ice bath, and purge the remaining part of the train by drawing clean ambient air through the system for 15 minutes at the sampling rate.

Clean ambient air can be provided by passing air through a charcoal filter or through an extra midget impinger with 15 ml of 3 percent H_2O_2. The tester may opt to simply use ambient air, without purification.

4.2 Sample Recovery. Disconnect the impingers after purging. Discard the contents of the midget bubbler. Pour the contents of the midget impingers into a leak-free polyethylene bottle for shipment. Rinse the three midget impingers and the connecting tubes with deionized, distilled water, and add the washings to the same storage container. Mark the fluid level. Seal and identify the sample container.

4.3 Sample Analysis. Note level of liquid in container, and confirm whether any sample was lost during shipment; note this on analytical data sheet. If a noticeable amount of leakage has occurred, either void the sample or use methods, subject to the approval of the Administrator, to correct the final results.

Transfer the contents of the storage container to a 100-ml volumetric flask and dilute to exactly 100 ml with deionized, distilled water. Pipette a 20-ml aliquot of this solution into a 250-ml Erlenmeyer flask, add 80 ml of 100 percent isopropanol and two to four drops of thorin indicator, and titrate to a pink endpoint using 0.0100 N barium perchlorate. Repeat and average the titration volumes. Run a blank with each series of samples. Replicate titrations must agree within 1 percent or 0.2 ml, whichever is larger.

(Note: Protect the 0.0100 N barium perchlorate solution from evaporation at all times.)

5. Calibration

5.1 Metering System.

5.1.1 Initial Calibration. Before its initial use in the field, first leak check the metering system (drying tube, needle valve, pump, rotameter, and dry gas meter) as follows: place a vacuum gauge at the inlet to the drying tube and pull a vacuum of 250 mm (10 in.) Hg; plug or pinch off the outlet of the flow meter, and then turn off the pump. The vacuum shall remain stable for at least 30 seconds. Carefully release the vacuum gauge before releasing the flow meter end.

Next, calibrate the metering system (at the sampling flow rate specified by the method) as follows: connect an appropriately sized wet test meter (e.g., 1 liter per revolution) to the inlet of the drying tube. Make three independent calibration runs, using at least five revolutions of the dry gas meter per run. Calculate the calibration factor, Y (wet test meter calibration volume divided by the dry gas meter volume, both volumes adjusted to the same reference temperature and pressure), for each run, and average the results. If any Y value deviates by more than 2 percent from the average, the metering system is unacceptable for use. Otherwise, use the average as the calibration factor for subsequent test runs.

5.1.2 Post-Test Calibration Check. After each field test series, conduct a calibration check as in Section 5.1.1 above, except for the following variations: (a) the leak check is not to be conducted, (b) three, or more revolutions of the dry gas meter may be used, and (c) only two independent runs need be made. If the calibration factor does

not deviate by more than 5 percent from the initial calibration factor (determined in Section 5.1.1), then the dry gas meter volumes obtained during the test series are acceptable. If the calibration factor deviates by more than 5 percent, recalibrate the metering system as in Section 5.1.1, and for the calculations, use the calibration factor (initial or recalibration) that yields the lower gas volume for each test run.

5.2 Thermometers. Calibrate against mercury-in-glass thermometers.

5.3 Rotameter. The rotameter need not be calibrated, but should be cleaned and maintained according to the manufacturer's instruction.

5.4 Barometer. Calibrate against a mercury barometer.

5.5 Barium Perchlorate Solution. Standardize the barium perchlorate solution against 25 ml of standard sulfuric acid to which 100 ml of 100 percent isopropanol has been added.

6. Calculations

Carry out calculations, retaining at least one extra decimal figure beyond that of the acquired data. Round off figures after final calculation.

6.1 Nomenclature.

C_{SO_2} = Concentration of sulfur dioxide, dry basis corrected to standard conditions, mg/dscm (lb/dscf).

N = Normality of barium perchlorate titrant, milliequivalents/ml.

P_{bar} = Barometric pressure at the exit orifice of the dry gas meter, mm Hg (in. Hg).

P_{std} = Standard absolute pressure, 760 mm Hg (29.92 in. Hg).

T_m = Average dry gas meter absolute temperature, °K (°R).

T_{std} = Standard absolute temperature, 293° K (528° R).

V_a = Volume of sample aliquot titrated, ml.

V_m = Dry gas volume as measured by the dry gas meter, dcm (dcf).

$V_{m(std)}$ = Dry gas volume measured by the dry gas meter, corrected to standard conditions, dscm (dscf).

V_{soln} = Total volume of solution in which the sulfur dioxide sample is contained, 100 ml.

V_t = Volume of barium perchlorate titrant used for the sample, ml (average of replicate titrations).

V_{tb} = Volume of barium perchlorate titrant used for the blank, ml.

Y = Dry gas meter calibration factor.

32.03 = Equivalent weight of sulfur dioxide.

6.2 Dry sample gas volume, corrected to standard conditions.

$$V_{m(std)} = V_m Y \left(\frac{T_{std}}{T_m}\right) \left(\frac{P_{bar}}{P_{std}}\right) = K_1 Y \frac{V_m P_{bar}}{T_m}$$

Equation 6-1

where:

K_1 = 0.3858 °K/mm Hg for metric units.

= 17.64 °R/in. Hg for English units.

6.3 Sulfur dioxide concentration.

$$C_{SO_2} = K_2 \frac{(V_t - V_{tb})N \left(\frac{V_{soln}}{V_a}\right)}{V_{m(std)}}$$

Equation 6-2

where:

K_2 = 32.03 mg/meq. for metric units.

= 7.061×10^{-5} lb/meq. for English units.

7. Bibliography

1. Atmospheric Emissions from Sulfuric Acid Manufacturing Processes. U.S. DHEW, PHS, Division of Air Pollution. Public Health Service Publication No. 999-AP-13. Cincinnati, Ohio. 1965.

2. Corbett, P.F. The Determination of SO_2 and SO_3 in Flue Gases. Journal of the Institute of Fuel. 24:237-243, 1961.

3. Matty, R. E. and E. K. Diehl. Measuring Flue-Gas SO_2 and SO_3. Power. 101:94-97. November 1957.

4. Patton, W. F. and J. A. Brink, Jr. New Equipment and Techniques for Sampling Chemical Process Gases. J. Air Pollution Control Association. 13:162. 1963.

5. Rom, J. J. Maintenance, Calibration, and Operation of Isokinetic Source-Sampling Equipment. Office of Air Programs, Environmental Protection Agency. Research Triangle Park, N. C. APTD-0576. March 1972.

6. Hamil, H. F. and D. E. Camann. Collaborative Study of Method for the Determination of Sulfur Dioxide Emissions From Stationary Sources (Fossil-Fuel Fired Steam Generators). Environmental Protection Agency, Research Triangle Park, N. C. EPA-650/4-74-024. December 1973.

7. Annual Book of ASTM Standards. Part 31; Water, Atmospheric Analysis. American Society for Testing and Materials. Philadelphia, PA. 1974. pp. 40-42.

8. Knoll, J. E. and M. R. Midgett. The Application of EPA Method 6 to High Sulfur Dioxide Concentrations. Environmental Protection Agency. Research Triangle Park, N. C. EPA-600/4-76-038. July 1976.

DETERMINATION OF NITROGEN OXIDE EMISSIONS FROM STATIONARY SOURCES

METHOD 7

METHOD 7--DETERMINATION OF NITROGEN OXIDE EMISSIONS FROM STATIONARY SOURCES

1. Principle and Applicability

1.1 Principle. A grab sample is collected in an evacuated flask containing a dilute sulfuric acid-hydrogen peroxide absorbing solution, and the nitrogen oxides, except nitrous oxide, are measured colorimetrically using the phenoldisulfonic acid (PDS) procedure.

1.2 Applicability. This method is applicable to the measurement of nitrogen oxides emitted from stationary sources. The range of the method has been determined to be 2 to 400 milligrams NO_x (as NO_2) per dry standard cubic meter, without having to dilute the sample.

2. Apparatus

2.1 Sampling (see Figure 7-1). Other grab sampling systems or equipment, capable of measuring sample volume to within ± 2.0 percent and collecting a sufficient sample volume to allow analytical reproducibility to within ± 5 percent, will be considered acceptable alternatives, subject to approval of the Administrator, U. S. Environmental Protection Agency. The following equipment is used in sampling:

2.1.1 Probe. Borosilicate glass tubing, sufficiently heated to prevent water condensation and equipped with an in-stack or out-stack filter to remove particulate matter (a plug of glass wool is satisfactory for this purpose). Stainless steel or Teflon[1] tubing may also be used for the probe. Heating is not necessary if the probe remains dry during the purging period.

---

[1]Mention of trade names or specific products does not constitute endorsement by the Environmental Protection Agency.

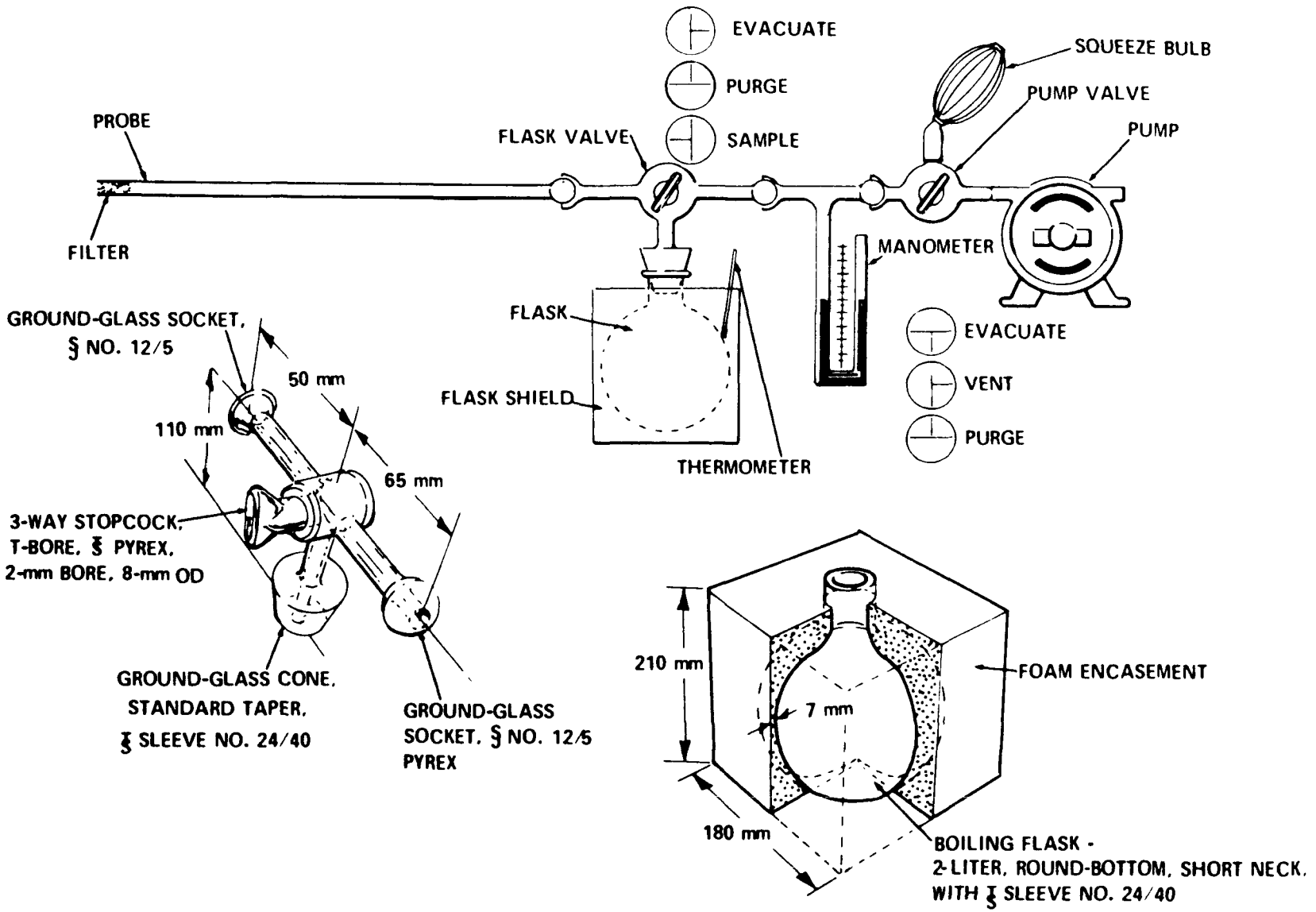

Figure 7-1. Sampling train, flask valve, and flask.

2.1.2 Collection Flask. Two-liter borosilicate, round bottom flask, with short neck and 24/40 standard taper opening, protected against implosion or breakage.

2.1.3 Flask Valve. T-bore stopcock connected to a 24/40 standard taper joint.

2.1.4 Temperature Gauge. Dial-type thermometer, or other temperature gauge, capable of measuring 1°C (2°F) intervals from -5 to 50°C (25 to 125°F).

2.1.5 Vacuum Line. Tubing capable of withstanding a vacuum of 75 mm Hg (3 in. Hg) absolute pressure, with "T" connection and T-bore stopcock.

2.1.6 Vacuum Gauge. U-tube manometer, 1 meter (36 in.), with 1-mm (0.1-in.) divisions, or other gauge capable of measuring pressure to within ±2.5 mm Hg (0.10 in. Hg).

2.1.7 Pump. Capable of evacuating the collection flask to a pressure equal to or less than 75 mm Hg (3 in. Hg) absolute.

2.1.8 Squeeze Bulb. One-way.

2.1.9 Volumetric Pipette. 25 ml.

2.1.10 Stopcock and Ground Joint Grease. A high-vacuum, high-temperature chlorofluorocarbon grease is required. Halocarbon 25-5S has been found to be effective.

2.1.11 Barometer. Mercury, aneroid, or other barometer capable of measuring atmospheric pressure to within 2.5 mm Hg (0.1 in. Hg). In many cases, the barometric reading may be obtained from a nearby national weather service station, in which case the station value

(which is the absolute barometric pressure) shall be requested and an adjustment for elevation differences between the weather station and sampling point shall be applied at a rate of minus 2.5 mm Hg (0.1 in. Hg) per 30 m (100 ft) elevation increase, or vice versa for elevation decrease.

2.2 Sample Recovery. The following equipment is required for sample recovery:

2.2.1 Graduated Cylinder. 50 ml with 1-ml divisions.

2.2.2 Storage Containers. Leak-free polyethylene bottles.

2.2.3 Wash Bottle. Polyethylene or glass.

2.2.4 Glass Stirring Rod.

2.2.5 Test Paper for Indicating pH. To cover the pH range of 7 to 14.

2.3 Analysis. For the analysis, the following equipment is needed:

2.3.1 Volumetric Pipettes. Two 1 ml, two 2 ml, one 3 ml, one 4 ml, two 10 ml, and one 25 ml for each sample and standard.

2.3.2 Porcelain Evaporating Dishes. 175- to 250-ml capacity with lip for pouring, one for each sample and each standard. The Coors No. 45006 (shallow-form, 195 ml) has been found to be satisfactory. Alternatively, polymethyl pentene beakers (Nalge No. 1203, 150 ml), or glass beakers (150 ml) may be used. When glass beakers are used, etching of the beakers may cause solid matter to be present in the analytical step; the solids should be removed by filtration (see Section 4.3).

2.3.3 Steam Bath. Low-temperature ovens or thermostatically controlled hot plates kept below 70°C (160°F) are acceptable alternatives.

2.3.4 Dropping Pipette or Dropper. Three required.

2.3.5 Polyethylene Policeman. One for each sample and each standard.

2.3.6 Graduated Cylinder. 100 ml with 1-ml divisions.

2.3.7 Volumetric Flasks. 50 ml (one for each sample and each standard), 100 ml (one for each sample and each standard, and one for the working standard KNO_3 solution), and 1000 ml (one).

2.3.8 Spectrophotometer. To measure absorbance at 410 nm.

2.3.9 Graduated Pipette. 10 ml with 0.1-ml divisions.

2.3.10 Test Paper for Indicating pH. To cover the pH range of 7 to 14.

2.3.11 Analytical Balance. To measure to within 0.1 mg.

3. Reagents

Unless otherwise indicated, it is intended that all reagents conform to the specifications established by the Committee on Analytical Reagents of the American Chemical Society, where such specifications are available; otherwise, use the best available grade.

3.1 Sampling. To prepare the absorbing solution, cautiously add 2.8 ml concentrated H_2SO_4 to 1 liter of deionized, distilled water. Mix well and add 6 ml of 3 percent hydrogen peroxide, freshly prepared from 30 percent hydrogen peroxide solution. The absorbing solution should be used within 1 week of its preparation. Do not expose to extreme heat or direct sunlight.

3.2 Sample Recovery. Two reagents are required for sample recovery:

3.2.1 Sodium Hydroxide (1 N). Dissolve 40 g NaOH in deionized, distilled water and dilute to 1 liter.

3.2.2 Water. Deionized, distilled to conform to ASTM specification D1193-74, Type 3. At the option of the analyst, the $KMNO_4$ test for oxidizable organic matter may be omitted when high concentrations of organic matter are not expected to be present.

3.3 Analysis. For the analysis, the following reagents are required:

3.3.1 Fuming Sulfuric Acid. 15 to 18 percent by weight free sulfur trioxide. HANDLE WITH CAUTION.

3.3.2 Phenol. White solid.

3.3.3 Sulfuric Acid. Concentrated, 95 percent minimum assay. HANDLE WITH CAUTION.

3.3.4 Potassium Nitrate. Dried at 105 to 110°C (220 to 230°F) for a minimum of 2 hours just prior to preparation of standard solution.

3.3.5 Standard KNO_3 Solution. Dissolve exactly 2.198 g of dried potassium nitrate (KNO_3) in deionized, distilled water and dilute to 1 liter with deionized, distilled water in a 1000-ml volumetric flask.

3.3.6 Working Standard KNO_3 Solution. Dilute 10 ml of the standard solution to 100 ml with deionized distilled water. One milliliter of the working standard solution is equivalent to 100 μg nitrogen dioxide (NO_2).

3.3.7 Water. Deionized, distilled as in Section 3.2.2.

3.3.8 Phenoldisulfonic Acid Solution. Dissolve 25 g of pure white phenol in 150 ml concentrated sulfuric acid on a steam bath. Cool, add 75 ml fuming sulfuric acid, and heat at 100°C (212°F) for 2 hours. Store in a dark, stoppered bottle.

3.3.9 Concentrated Ammonium Hydroxide. Reagent grade.

4. Procedures

4.1 Sampling.

4.1.1 Pipette 25 ml of absorbing solution into a sample flask, retaining a sufficient quantity for use in preparing the calibration standards. Insert the flask valve stopper into the flask with the valve in the "purge" position. Assemble the sampling train as shown in Figure 7-1 and place the probe at the sampling point. Make sure that all fittings are tight and leak-free, and that all ground glass joints have been properly greased with a high-vacuum, high-temperature chlorofluorocarbon-based stopcock grease. Turn the flask valve and the pump valve to their "evacuate" positions. Evacuate the flask to 75 mm Hg (3 in. Hg) absolute pressure, or less. Evacuation to a pressure approaching the vapor pressure of water at the existing temperature is desirable. Turn the pump valve to its "vent" position and turn off the pump. Check for leakage by observing the manometer for any pressure fluctuation. (Any variation greater than 10 mm Hg (0.4 in. Hg) over a period of 1 minute is not acceptable, and the flask is not to be used until the leakage problem is corrected. Pressure in the flask is not to exceed 75 mm Hg (3 in. Hg) absolute at the time sampling is commenced.) Record the volume of the flask and valve (V_f), the flask temperature (T_i), and the barometric pressure. Turn the flask valve counterclockwise to its "purge" position

and do the same with the pump valve. Purge the probe and the vacuum tube using the squeeze bulb. If condensation occurs in the probe and the flask valve area, heat the probe and purge until the condensation disappears. Next, turn the pump valve to its "vent" position. Turn the flask valve clockwise to its "evacuate" position and record the difference in the mercury levels in the manometer. The absolute internal pressure in the flask (P_i) is equal to the barometric pressure less the manometer reading. Immediately turn the flask valve to the "sample" position and permit the gas to enter the flask until pressures in the flask and sample line (i.e., duct, stack) are equal. This will usually require about 15 seconds; a longer period indicates a "plug" in the probe, which must be corrected before sampling is continued. After collecting the sample, turn the flask valve to its "purge" position and disconnect the flask from the sampling train. Shake the flask for at least 5 minutes.

4.1.2 If the gas being sampled contains insufficient oxygen for the conversion of NO to NO_2 (e.g., an applicable subpart of the standard may require taking a sample of a calibration gas mixture of NO in N_2), then oxygen shall be introduced into the flask to permit this conversion. Oxygen may be introduced into the flask by one of three methods: (1) Before evacuating the sampling flask, flush with pure cylinder oxygen, then evacuate flask to 75 mm Hg (3 in. Hg) absolute pressure or less; or (2) inject oxygen into the flask after sampling; or (3) terminate sampling with a minimum of 50 mm Hg (2 in. Hg) vacuum remaining in the flask, record this final pressure, and then vent the flask to the atmosphere until the flask pressure is almost equal to atmospheric pressure.

4.2 Sample Recovery. Let the flask set for a minimum of 16 hours and then shake the contents for 2 minutes. Connect the flask to a mercury filled U-tube manometer. Open the valve from the flask to the manometer and record the flask temperature (T_f), the barometric pressure, and the difference between the mercury levels in the manometer. The absolute internal pressure in the flask (P_f) is the barometric pressure less the manometer reading. Transfer the contents of the flask to a leak-free polyethylene bottle. Rinse the flask twice with 5-ml portions of deionized, distilled water and add the rinse water to the bottle. Adjust the pH to between 9 and 12 by adding sodium hydroxide (1 N), dropwise (about 25 to 35 drops). Check the pH by dipping a stirring rod into the solution and then touching the rod to the pH test paper. Remove as little material as possible during this step. Mark the height of the liquid level so that the container can be checked for leakage after transport. Label the container to clearly identify its contents. Seal the container for shipping.

4.3 Analysis. Note the level of the liquid in container and confirm whether or not any sample was lost during shipment; note this on the analytical data sheet. If a noticeable amount of leakage has occurred, either void the sample or use methods, subject to the approval of the Administrator, to correct the final results. Immediately prior to analysis, transfer the contents of the shipping container to a 50-ml volumetric flask, and rinse the container twice with 5-ml portions of deionized, distilled water. Add the rinse water to the flask and dilute to the mark with deionized, distilled water; mix thoroughly. Pipette

a 25-ml aliquot into the porcelain evaporating dish. Return any unused portion of the sample to the polyethylene storage bottle. Evaporate the 25-ml aliquot to dryness on a steam bath and allow to cool. Add 2 ml phenoldisulfonic acid solution to the dried residue and triturate thoroughly with a polyethylene policeman. Make sure the solution contacts all the residue. Add 1 ml deionized, distilled water and four drops of concentrated sulfuric acid. Heat the solution on a steam bath for 3 minutes with occasional stirring. Allow the solution to cool, add 20 ml deionized, distilled water, mix well by stirring, and add concentrated ammonium hydroxide, dropwise, with constant stirring, until the pH is 10 (as determined by pH paper). If the sample contains solids, these must be removed by filtration (centrifugation is an acceptable alternative, subject to the approval of the Administrator), as follows: filter through Whatman No. 41 filter paper into a 100-ml volumetric flask; rinse the evaporating dish with three 5-ml portions of deionized, distilled water; filter these three rinses. Wash the filter with at least three 15-ml portions of deionized, distilled water. Add the filter washings to the contents of the volumetric flask and dilute to the mark with deionized, distilled water. If solids are absent, the solution can be transferred directly to the 100-ml volumetric flask and diluted to the mark with deionized, distilled water. Mix the contents of the flask thoroughly, and measure the absorbance at the optimum wavelength used for the standards (Section 5.2.1), using the blank solution as a zero reference. Dilute the sample and the blank with equal volumes of deionized, distilled water if the absorbance exceeds A_4, the absorbance of the 400 µg NO_2 standard (see Section 5.2.2).

5. Calibration

5.1 Flask Volume. The volume of the collection flask-flask valve combination must be known prior to sampling. Assemble the flask and flask valve and fill with water, to the stopcock. Measure the volume of water to ±10 ml. Record this volume on the flask.

5.2 Spectrophotometer Calibration.

5.2.1 Optimum Wavelength Determination. Calibrate the wavelength scale of the spectrophotometer every 6 months. The calibration may be accomplished by using an energy source with an intense line emission such as a mercury lamp, or by using a series of glass filters spanning the measuring range of the spectrophotometer. Calibration materials are available commercially and from the National Bureau of Standards. Specific details on the use of such materials should be supplied by the vendor; general information about calibration techniques can be obtained from general reference books on analytical chemistry. The wavelength scale of the spectrophotometer must read correctly within ±5 nm at all calibration points; otherwise, the spectrophotometer shall be repaired and recalibrated. Once the wavelength scale of the spectrophotometer is in proper calibration, use 410 nm as the optimum wavelength for the measurement of the absorbance of the standards and samples.

Alternatively, a scanning procedure may be employed to determine the proper measuring wavelength. If the instrument is a double-beam spectrophotometer, scan the spectrum between 400 and 415 nm using a 200 μg NO_2 standard solution in the sample cell and a blank solution in the reference cell. If a peak does not occur, the spectrophotometer is probably malfunctioning and should be repaired. When a peak is obtained within the 400 to 415 nm range, the wavelength at which this peak occurs shall be the optimum wavelength for the measurement of absorbance of both the standards and the samples. For a single-beam spectrophotometer, follow the scanning procedure described above, except that the blank and standard solutions shall be scanned separately. The optimum wavelength shall be the wavelength at which the maximum difference in absorbance between the standard and the blank occurs.

5.2.2 Determination of Spectrophotometer Calibration Factor K_c. Add 0.0 ml, 2.0 ml, 4.0 ml, 6.0 ml, and 8.0 ml of the KNO_3 working standard solution (1 ml = 100 μg NO_2) to a series of five 50-ml volumetric flasks. To each flask, add 25 ml of absorbing solution, 10 ml deionized, distilled water, and sodium hydroxide (1N) dropwise until the pH is between 9 and 12 (about 25 to 35 drops each). Dilute to the mark with deionized, distilled water. Mix thoroughly and pipette a 25-ml aliquot of each solution into a separate porcelain evaporating dish. Beginning with the evaporation step, follow the analysis procedure of Section 4.3, until the solution has been transferred to the 100-ml volumetric flask and diluted to the mark. Measure the absorbance of each solution, at the optimum wavelength, as determined in Section 5.2.1. This calibration procedure must be repeated

on each day that samples are analyzed. Calculate the spectrophotometer calibration factor as follows:

$$K_c = 100 \frac{A_1 + 2A_2 + 3A_3 + 4A_4}{A_1^2 + A_2^2 + A_3^2 + A_4^2} \qquad \text{Equation 7-1}$$

where:

K_c = Calibration factor

A_1 = Absorbance of the 100-μg NO_2 standard

A_2 = Absorbance of the 200-μg NO_2 standard

A_3 = Absorbance of the 300-μg NO_2 standard

A_4 = Absorbance of the 400-μg NO_2 standard

5.3 Barometer. Calibrate against a mercury barometer.

5.4 Temperature Gauge. Calibrate dial thermometers against mercury-in-glass thermometers.

5.5 Vacuum Gauge. Calibrate mechanical gauges, if used, against a mercury manometer such as that specified in 2.1.6.

5.6 Analytical Balance. Calibrate against standard weights.

6. Calculations

Carry out the calculations, retaining at least one extra decimal figure beyond that of the acquired data. Round off figures after final calculations.

6.1 Nomenclature.

A = Absorbance of sample.

C = Concentration of NO_x as NO_2, dry basis, corrected to standard conditions, mg/dscm (lb/dscf).

F = Dilution factor (i.e., 25/5, 25/10, etc., required only if sample dilution was needed to reduce the absorbance into the range of calibration).

K_c = Spectrophotometer calibration factor.

m = Mass of NO_x as NO_2 in gas sample, μg.

P_f = Final absolute pressure of flask, mm Hg (in. Hg).

P_i = Initial absolute pressure of flask, mm Hg (in. Hg).

P_{std} = Standard absolute pressure, 760 mm Hg (29.92 in. Hg).

T_f = Final absolute temperature of flask, °K (°R).

T_i = Initial absolute temperature of flask, °K (°R).

T_{std} = Standard absolute temperature, 293°K (528°R).

V_{sc} = Sample volume at standard conditions (dry basis), ml.

V_f = Volume of flask and valve, ml.

V_a = Volume of absorbing solution, 25 ml.

2 = 50/25, the aliquot factor. (If other than a 25-ml aliquot was used for analysis, the corresponding factor must be substituted).

6.2 Sample volume, dry basis, corrected to standard conditions.

$$V_{sc} = \frac{T_{std}}{P_{std}} (V_f - V_a) \left[\frac{P_f}{T_f} - \frac{P_i}{T_i} \right] = K_1 \ (V_f - 25 \text{ ml}) \left[\frac{P_f}{T_f} - \frac{P_i}{T_i} \right]$$

Equation 7-2

where:

$$K_1 = 0.3858 \frac{°K}{mm\ Hg} \text{ for metric units}$$

$$= 17.64 \frac{°R}{in.\ Hg} \text{ for English units}$$

6.3 Total μg NO_2 per sample.

$$m = 2K_c AF \qquad \text{Equation 7-3}$$

Note: If other than a 25-ml aliquot is used for analysis, the factor 2 must be replaced by a corresponding factor.

6.4 Sample concentration, dry basis, corrected to standard conditions.

$$C = K_2 \frac{m}{V_{sc}} \qquad \text{Equation 7-4}$$

where:

$$K_2 = 10^3 \frac{mg/m^3}{\mu g/ml} \text{ for metric units}$$

$$= 6.243 \times 10^{-5} \frac{lb/scf}{\mu g/ml} \text{ for English units}$$

7. Bibliography

1. Standard Methods of Chemical Analysis. 6th ed. New York, D. Van Nostrand Co., Inc. 1962. Vol. 1, p. 329-330.

2. Standard Method of Test for Oxides of Nitrogen in Gaseous Combustion Products (Phenoldisulfonic Acid Procedure). In: 1968 Book of ASTM Standards, Part 26. Philadelphia, Pa. 1968. ASTM Designation D-1608-60, p. 725-729.

3. Jacob, M. B. The Chemical Analysis of Air Pollutants. New York. Interscience Publishers, Inc. 1960. Vol. 10, p. 351-356.

4. Beatty, R. L., L. B. Berger, and H. H. Schrenk. Determination of Oxides of Nitrogen by the Phenoldisulfonic Acid Method. Bureau of Mines, U. S. Dept. of Interior. R. I. 3687. February 1943.

5. Hamil, H. F. and D. E. Camann. Collaborative Study of Method for the Determination of Nitrogen Oxide Emissions from Stationary Sources (Fossil Fuel-Fired Steam Generators). Southwest Research Institute report for Environmental Protection Agency. Research Triangle Park, N. C. October 5, 1973.

6. Hamil, H. F. and R. E. Thomas. Collaborative Study of Method for the Determination of Nitrogen Oxide Emissions from Stationary Sources (Nitric Acid Plants). Southwest Research Institute report for Environmental Protection Agency. Research Triangle Park, N. C. May 8, 1974.

DETERMINATION OF SULFURIC ACID MIST AND SULFUR DIOXIDE EMISSIONS FROM STATIONARY SOURCES

METHOD 8

METHOD 8--DETERMINATION OF SULFURIC ACID MIST AND SULFUR DIOXIDE EMISSIONS FROM STATIONARY SOURCES

1. Principle and Applicability

1.1 Principle. A gas sample is extracted isokinetically from the stack. The sulfuric acid mist (including sulfur trioxide) and the sulfur dioxide are separated, and both fractions are measured separately by the barium-thorin titration method.

1.2 Applicability. This method is applicable for the determination of sulfuric acid mist (including sulfur trioxide, and in the absence of other particulate matter) and sulfur dioxide emissions from stationary sources. Collaborative tests have shown that the minimum detectable limits of the method are 0.05 milligrams/cubic meter (0.03 x 10^{-7} pounds/cubic foot) for sulfur trioxide and 1.2 mg/m^3(0.74 x 10^{-7} lb/ft^3) for sulfur dioxide. No upper limits have been established. Based on theoretical calculations for 200 milliliters of 3 percent hydrogen peroxide solution, the upper concentration limit for sulfur dioxide in a 1.0 m^3 (35.3 ft^3) gas sample is about 12,500 mg/m^3 (7.7 x 10^{-4} lb/ft^3). The upper limit can be extended by increasing the quantity of peroxide solution in the impingers.

Possible interfering agents of this method are fluorides, free ammonia, and dimethyl aniline. If any of these interfering agents are present (this can be determined by knowledge of the process), alternative methods, subject to the approval of the Administrator, U. S. Environmental Protection Agency, are required.

Filterable particulate matter may be determined along with SO_3 and SO_2 (subject to the approval of the Administrator) by inserting a heated glass fiber filter between the probe and isopropanol impinger (see Section 2.1 of Method 6). If this option is chosen, particulate analysis is gravimetric only; H_2SO_4 acid mist is not determined separately.

2. Apparatus

2.1 Sampling. A schematic of the sampling train used in this method is shown in Figure 8-1; it is similar to the Method 5 train except that the filter position is different and the filter holder does not have to be heated. Commercial models of this train are available. For those who desire to build their own, however, complete construction details are described in APTD-0581. Changes from the APTD-0581 document and allowable modifications to Figure 8-1 are discussed in the following subsections.

The operating and maintenance procedures for the sampling train are described in APTD-0576. Since correct usage is important in obtaining valid results, all users should read the APTD-0576 document and adopt the operating and maintenance procedures outlined in it, unless otherwise specified herein. Further details and guidelines on operation and maintenance are given in Method 5 and should be read and followed whenever they are applicable.

2.1.1 Probe Nozzle. Same as Method 5, Section 2.1.1.

2.1.2 Probe Liner. Borosilicate or quartz glass, with a heating system to prevent visible condensation during sampling. Do not use metal probe liners.

2.1.3 Pitot Tube. Same as Method 5, Section 2.1.3.

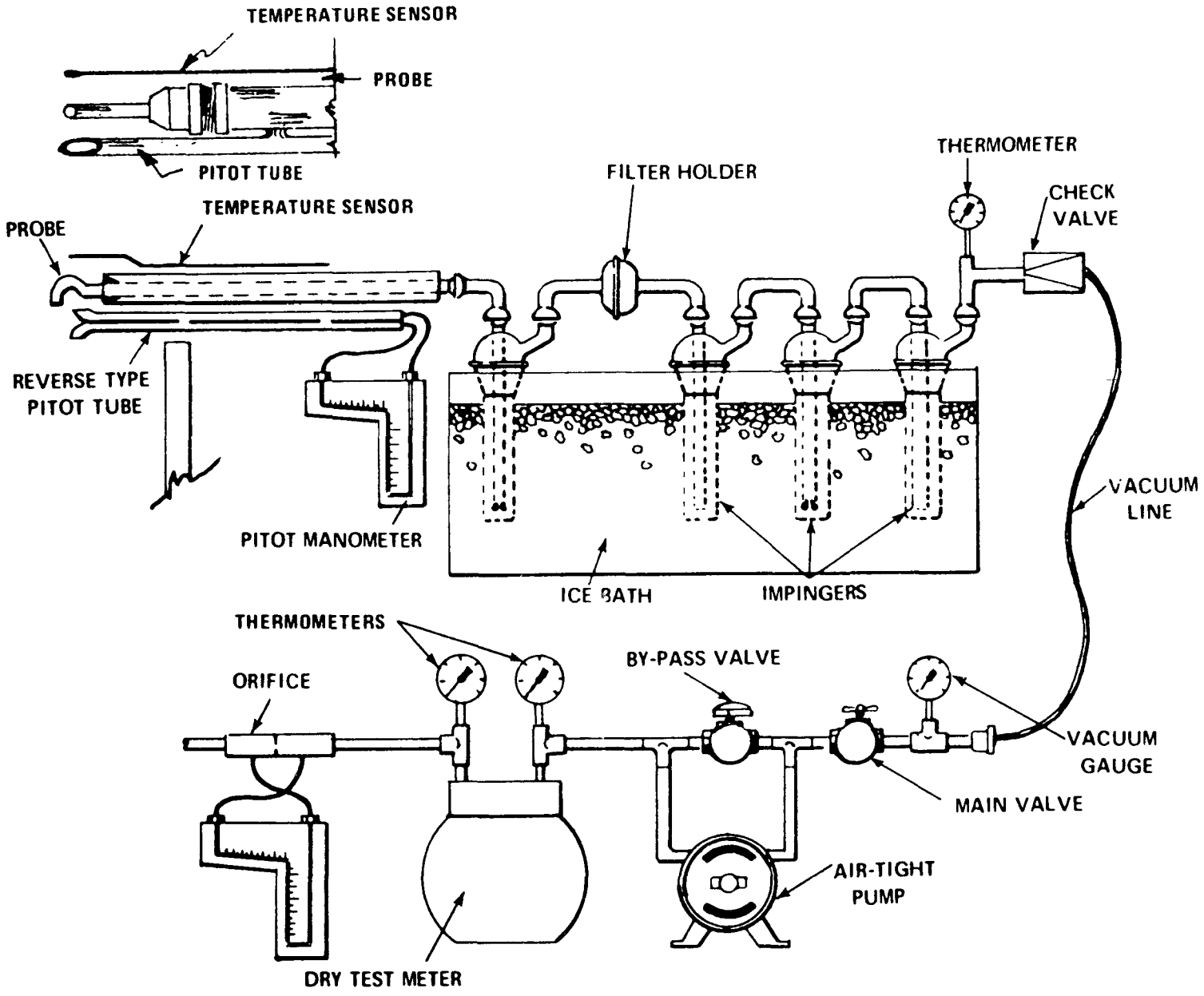

Figure 8-1. Sulfuric acid mist sampling train.

2.1.4 Differential Pressure Gauge. Same as Method 5, Section 2.1.4.

2.1.5 Filter Holder. Borosilicate glass, with a glass frit filter support and a silicone rubber gasket. Other gasket materials, e.g., Teflon or Viton, may be used subject to the approval of the Administrator. The holder design shall provide a positive seal against leakage from the outside or around the filter. The filter holder shall be placed between the first and second impingers. Note: Do not heat the filter holder.

2.1.6 Impingers--Four, as shown in Figure 8-1. The first and third shall be of the Greenburg-Smith design with standard tips. The second and fourth shall be of the Greenburg-Smith design, modified by replacing the insert with an approximately 13 millimeter (0.5 in.) ID glass tube, having an unconstricted tip located 13 mm (0.5 in.) from the bottom of the flask. Similar collection systems, which have been approved by the Administrator, may be used.

2.1.7 Metering System. Same as Method 5, Section 2.1.8.

2.1.8 Barometer. Same as Method 5, Section 2.1.9.

2.1.9 Gas Density Determination Equipment. Same as Method 5, Section 2.1.10.

2.1.10 Temperature Gauge. Thermometer, or equivalent, to measure the temperature of the gas leaving the impinger train to within 1°C (2°F).

2.2 Sample Recovery.

2.2.1 Wash Bottles. Polyethylene or glass, 500 ml. (two).

2.2.2 Graduated Cylinders. 250 ml, 1 liter. (Volumetric flasks may also be used.)

2.2.3 Storage Bottles. Leak-free polyethylene bottles, 1000 ml size (two for each sampling run).

2.2.4 Trip Balance. 500-gram capacity, to measure to ±0.5 g (necessary only if a moisture content analysis is to be done).

2.3 Analysis.

2.3.1 Pipettes. Volumetric 25 ml, 100 ml.

2.3.2 Burette. 50 ml.

2.3.3 Erlenmeyer Flask. 250 ml. (one for each sample blank and standard).

2.3.4 Graduated Cylinder. 100 ml.

2.3.5 Trip Balance. 500 g capacity, to measure to ±0.5 g.

2.3.6 Dropping Bottle. To add indicator solution, 125-ml size.

3. Reagents

Unless otherwise indicated, all reagents are to conform to the specifications established by the Committee on Analytical Reagents of the American Chemical Society, where such specifications are available. Otherwise, use the best available grade.

3.1 Sampling.

3.1.1 Filters. Same as Method 5, Section 3.1.1.

3.1.2 Silica Gel. Same as Method 5, Section 3.1.2.

3.1.3 Water. Deionized, distilled to conform to ASTM specification D1193-74, Type 3. At the option of the analyst, the $KMnO_4$ test for oxidizable organic matter may be omitted when high concentrations of organic matter are not expected to be present.

3.1.4 Isopropanol, 80 Percent. Mix 800 ml of isopropanol with 200 ml of deionized, distilled water.

Note: Experience has shown that only A.C.S. grade isopropanol is satisfactory. Tests have shown that isopropanol obtained from commercial sources occasionally has peroxide impurities that will cause erroneously high sulfuric acid mist measurement. Use the following test for detecting peroxides in each lot of isopropanol: Shake 10 ml of the isopropanol with 10 ml of freshly prepared 10 percent potassium iodide solution. Prepare a blank by similarly treating 10 ml of distilled water. After 1 minute, read the absorbance on a spectrophotometer at 352 nanometers (Note: Use a 1 cm path length). If the absorbance exceeds 0.1, the isopropanol shall not be used. Peroxides may be removed from isopropanol by redistilling, or by passage through a column of activated alumina. However, reagent-grade isopropanol with suitably low peroxide levels is readily available from commercial sources; therefore, rejection of contaminated lots may be more efficient than following the peroxide removal procedure.

3.1.5 Hydrogen Peroxide, 3 Percent. Dilute 100 ml of 30 percent hydrogen peroxide to 1 liter with deionized, distilled water. Prepare fresh daily.

3.1.6 Crushed Ice.

3.2 Sample Recovery.

3.2.1 Water. Same as 3.1.3.

3.2.2 Isopropanol, 80 Percent. Same as 3.1.4.

3.3 Analysis.

3.3.1 Water. Same as 3.1.3.

3.3.2 Isopropanol, 100 Percent.

3.3.3 Thorin Indicator. 1-(o-arsonophenylazo)-2-naphthol-3, 6-disulfonic acid, disodium salt, or equivalent. Dissolve 0.20 g in 100 ml of deionized, distilled water.

3.3.4 Barium Perchlorate (0.0100 Normal). Dissolve 1.95 g of barium perchlorate trihydrate ($Ba(ClO_4)_2 \cdot 3H_2O$) in 200 ml deionized, distilled water, and dilute to 1 liter with isopropanol; 1.22 g of barium chloride dihydrate ($BaCl_2 \cdot 2H_2O$) may be used instead of the barium perchlorate. Standardize with sulfuric acid as in Section 5.2. This solution must be protected against evaporation at all times.

3.3.5 Sulfuric Acid Standard (0.0100 N). Purchase or standardize to $\pm$0.0002 N against 0.0100 N NaOH that has previously been standardized against primary standard potassium acid phthalate.

4. Procedure

4.1 Sampling.

4.1.1 Pretest Preparation. Follow the procedure outlined in Method 5, Section 4.1.1; filters should be inspected, but need not be desiccated, weighed, or identified. If the effluent gas can be considered dry, i.e., moisture free, the silica gel need not be weighed.

4.1.2 Preliminary Determinations. Follow the procedure outlined in Method 5, Section 4.1.2.

4.1.3 Preparation of Collection Train. Follow the procedure outlined in Method 5, Section 4.1.3 (except for the second paragraph and other obviously inapplicable parts) and use Figure 8-1 instead of Figure 5-1. Replace the second paragraph with: Place 100 ml of

80 percent isopropanol in the first impinger, 100 ml of 3 percent hydrogen peroxide in both the second and third impingers; retain a portion of each reagent for use as a blank solution. Place about 200 g of silica gel in the fourth impinger.

Note: If moisture content is to be determined by impinger analysis, weigh each of the first three impingers (plus absorbing solution) to the nearest 0.5 g and record these weights. The weight of the silica gel (or silica gel plus container) must also be determined to the nearest 0.5 g and recorded.

4.1.4 Pretest Leak-Check Procedure. Follow the basic procedure outlined in Method 5, Section 4.1.4.1, noting that the probe heater shall be adjusted to the minimum temperature required to prevent condensation, and also that verbage such as, ". . . plugging the inlet to the filter holder . . . ," shall be replaced by, ". . . plugging the inlet to the first impinger . . . ." The pretest leak-check is optional.

4.1.5 Train Operation. Follow the basic procedures outlined in Method 5, Section 4.1.5, in conjunction with the following special instructions. Data shall be recorded on a sheet similar to the one in Figure 8-2. The sampling rate shall not exceed 0.030 m^3/min (1.0 cfm) during the run. Periodically during the test, observe the connecting line between the probe and first impinger for signs of condensation. If it does occur, adjust the probe heater setting upward to the minimum temperature required to prevent condensation. If component changes become necessary during a run, a leak-check shall

PLANT _____

LOCATION _____

OPERATOR _____

DATE _____

RUN NO. _____

SAMPLE BOX NO. _____

METER BOX NO. _____

METER $\Delta H@$ _____

C FACTOR _____

PITOT TUBE COEFFICIENT, Cp _____

SCHEMATIC OF STACK CROSS SECTION

STATIC PRESSURE, mm Hg (in. Hg) _____

AMBIENT TEMPERATURE _____

BAROMETRIC PRESSURE _____

ASSUMED MOISTURE, % _____

PROBE LENGTH, m (ft) _____

NOZZLE IDENTIFICATION NO. _____

AVERAGE CALIBRATED NOZZLE DIAMETER, cm (in.) _____

PROBE HEATER SETTING _____

LEAK RATE, m^3/min, (cfm) _____

PROBE LINER MATERIAL _____

FILTER NO. _____

TRAVERSE POINT NUMBER	SAMPLING TIME (θ), min.	VACUUM mm Hg (in. Hg)	STACK TEMPERATURE (T_S), °C (°F)	VELOCITY HEAD (ΔP_S), mm H_2O (in. H_2O)	PRESSURE DIFFERENTIAL ACROSS ORIFICE METER, mm H_2O (in. H_2O)	GAS SAMPLE VOLUME, m^3 (ft^3)	GAS SAMPLE TEMPERATURE AT DRY GAS METER		TEMPERATURE OF GAS LEAVING CONDENSER OR LAST IMPINGER, °C (°F)
							INLET, °C (°F)	OUTLET, °C (°F)	
TOTAL							Avg	Avg	
AVERAGE							Avg		

Figure 8-2. Field data.

be done immediately before each change, according to the procedure outlined in Section 4.1.4.2 of Method 5 (with appropriate modifications, as mentioned in Section 4.1.4 of this method); record all leak rates. If the leakage rate(s) exceed the specified rate, the tester shall either void the run or shall plan to correct the sample volume as outlined in Section 6.3 of Method 5. Immediately after component changes, leak-checks are optional. If these leak-checks are done, the procedure outlined in Section 4.1.4.1 of Method 5 (with appropriate modifications) shall be used.

After turning off the pump and recording the final readings at the conclusion of each run, remove the probe from the stack. Conduct a post-test (mandatory) leak-check as in Section 4.1.4.3 of Method 5 (with appropriate modifications) and record the leak rate. If the post-test leakage rate exceeds the specified acceptable rate, the tester shall either correct the sample volume, as outlined in Section 6.3 of Method 5, or shall void the run.

Drain the ice bath and, with the probe disconnected, purge the remaining part of the train, by drawing clean ambient air through the system for 15 minutes at the average flow rate used for sampling.

Note: Clean ambient air can be provided by passing air through a charcoal filter. At the option of the tester, ambient air (without cleaning) may be used.

4.1.6 Calculation of Percent Isokinetic. Follow the procedure outlined in Method 5, Section 4.1.6.

4.2 Sample Recovery.

4.2.1 Container No. 1. If a moisture content analysis is to be done, weigh the first impinger plus contents to the nearest 0.5 g and record this weight.

Transfer the contents of the first impinger to a 250-ml graduated cylinder. Rinse the probe, first impinger, all connecting glassware before the filter, and the front half of the filter holder with 80 percent isopropanol. Add the rinse solution to the cylinder. Dilute to 250 ml with 80 percent isopropanol. Add the filter to the solution, mix, and transfer to the storage container. Protect the solution against evaporation. Mark the level of liquid on the container and identify the sample container.

4.2.2 Container No. 2. If a moisture content analysis is to be done, weigh the second and third impingers (plus contents) to the nearest 0.5 g and record these weights. Also, weigh the spent silica gel (or silica gel plus impinger) to the nearest 0.5 g.

Transfer the solutions from the second and third impingers to a 1000-ml graduated cylinder. Rinse all connecting glassware (including back half of filter holder) between the filter and silica gel impinger with deionized, distilled water, and add this rinse water to the cylinder. Dilute to a volume of 1000 ml with deionized, distilled water. Transfer the solution to a storage container. Mark the level of liquid on the container. Seal and identify the sample container.

4.3 Analysis.

Note the level of liquid in containers 1 and 2, and confirm whether or not any sample was lost during shipment; note this on the analytical data sheet. If a noticeable amount of leakage has occurred, either void the sample or use methods, subject to the approval of the Administrator, to correct the final results.

4.3.1 Container No. 1. Shake the container holding the isopropanol solution and the filter. If the filter breaks up, allow the fragments to settle for a few minutes before removing a sample. Pipette a 100-ml aliquot of this solution into a 250-ml Erlenmeyer flask, add 2 to 4 drops of thorin indicator, and titrate to a pink endpoint using 0.0100 N barium perchlorate. Repeat the titration with a second aliquot of sample and average the titration values. Replicate titrations must agree within 1 percent or 0.2 ml, whichever is greater.

4.3.2 Container No. 2. Thoroughly mix the solution in the container holding the contents of the second and third impingers. Pipette a 10-ml aliquot of sample into a 250-ml Erlenmeyer flask. Add 40 ml of isopropanol, 2 to 4 drops of thorin indicator, and titrate to a pink endpoint using 0.0100 N barium perchlorate. Repeat the titration with a second aliquot of sample and average the titration values. Replicate titrations must agree within 1 percent or 0.2 ml, whichever is greater.

4.3.3 Blanks. Prepare blanks by adding 2 to 4 drops of thorin indicator to 100 ml of 80 percent isopropanol. Titrate the blanks in the same manner as the samples.

5. Calibration

5.1 Calibrate equipment using the procedures specified in the following sections of Method 5: Section 5.3 (metering system); Section 5.5 (temperature gauges); Section 5.7 (barometer). Note that the recommended leak-check of the metering system, described in Section 5.6 of Method 5, also applies to this method.

5.2 Standardize the barium perchlorate solution with 25 ml of standard sulfuric acid, to which 100 ml of 100 percent isopropanol has been added.

6. Calculations

Note: Carry out calculations retaining at least one extra decimal figure beyond that of the acquired data. Round off figures after final calculation.

6.1 Nomenclature.

A_n = Cross-sectional area of nozzle, m^2 (ft^2).

B_{ws} = Water vapor in the gas stream, proportion by volume.

$C_{H_2SO_4}$ = Sulfuric acid (including SO_3) concentration, g/dscm (lb/dscf).

C_{SO_2} = Sulfur dioxide concentration, g/dscm (lb/dscf).

I = Percent of isokinetic sampling.

N = Normality of barium perchlorate titrant, g equivalents/liter.

P_{bar} = Barometric pressure at the sampling site, mm Hg (in. Hg).

P_s = Absolute stack gas pressure, mm Hg (in. Hg).

P_{std} = Standard absolute pressure, 760 mm Hg (29.92 in. Hg).

T_m = Average absolute dry gas meter temperature (see Figure 8-2), °K (°R).

T_s = Average absolute stack gas temperature (see Figure 8-2), °K (°R).

T_{std} = Standard absolute temperature, 293°K (528°R).

V_a = Volume of sample aliquot titrated, 100 ml for H_2SO_4 and 10 ml for SO_2.

V_{lc} = Total volume of liquid collected in impingers and silica gel, ml.

V_m = Volume of gas sample as measured by dry gas meter, dcm (dcf).

$V_{m(std)}$ = Volume of gas sample measured by the dry gas meter corrected to standard conditions, dscm (dscf).

v_s = Average stack gas velocity, calculated by Method 2, Equation 2-9, using data obtained from Method 8, m/sec (ft/sec).

V_{soln} = Total volume of solution in which the sulfuric acid or sulfur dioxide sample is contained, 250 ml or 1000 ml, respectively.

V_t = Volume of barium perchlorate titrant used for the sample, ml.

V_{tb} = Volume of barium perchlorate titrant used for the blank, ml.

Y = Dry gas meter calibration factor.

ΔH = Average pressure drop across orifice meter, mm (in.) H_2O.

θ = Total sampling time, min.

13.6 = Specific gravity of mercury.

60 = sec/min.

100 = Conversion to percent.

6.2 Average dry gas meter temperature and average orifice pressure drop. See data sheet (Figure 8-2).

6.3 Dry Gas Volume. Correct the sample volume measured by the dry gas meter to standard conditions (20°C and 760 mm Hg or 68°F and 29.92 in. Hg) by using Equation 8-1.

$$V_{m(std)} = V_m Y \left(\frac{T_{std}}{T_m}\right) \frac{P_{bar} + \left(\frac{\Delta H}{13.6}\right)}{P_{std}} = K_1 \, V_m Y \, \frac{P_{bar} + (\Delta H/13.6)}{T_m}$$

Equation 8-1

where:

K_1 = 0.3858 °K/mm Hg for metric units.

= 17.64 °R/in. Hg for English units.

Note: If the leak rate observed during any mandatory leak-checks exceeds the specified acceptable rate, the tester shall either correct the value of V_m in Equation 8-1 (as described in Section 6.3 of Method 5), or shall invalidate the test run.

6.4 Volume of Water Vapor and Moisture Content. Calculate the volume of water vapor using Equation 5-2 of Method 5; the weight of water collected in the impingers and silica gel can be directly converted to milliliters (the specific gravity of water is 1 g/ml). Calculate the moisture content of the stack gas, using Equation 5-3 of Method 5. The "Note" in Section 6.5 of Method 5 also applies to this method. Note that if the effluent gas stream can be considered dry, the volume of water vapor and moisture content need not be calculated.

6.5 Sulfuric acid mist (including SO_3) concentration.

$$C_{H_2SO_4} = K_2 \, \frac{N \, (V_t - V_{tb}) \left(\frac{V_{soln}}{V_a}\right)}{V_{m(std)}}$$

Equation 8-2

where:

K_2 = 0.04904 g/milliequivalent for metric units.

= 1.081×10^{-4} lb/meq for English units.

6.6 Sulfur dioxide concentration.

$$C_{SO_2} = K_3 \frac{N\,(V_t - V_{tb})\left(\frac{V_{soln}}{V_a}\right)}{V_{m(std)}} \qquad \text{Equation 8-3}$$

where:

K_3 = 0.03203 g/meq for metric units.

= 7.061×10^{-5} lb/meq for English units.

6.7 Isokinetic Variation.

6.7.1 Calculation from raw data.

$$I = \frac{100\,T_s\,[K_4 V_{1c} + (V_m Y/T_m)\,(P_{bar} + \Delta H/13.6)]}{60\,\theta\,v_s\,P_s\,A_n}$$

Equation 8-4

where:

K_4 = 0.003464 mm Hg-m^3/ml-°K for metric units.

= 0.002676 in. Hg-ft^3/ml-°R for English units.

6.7.2 Calculation from intermediate values.

$$I = \frac{T_s\,V_{m(std)}\,P_{std}\,100}{T_{std}\,v_s\,\theta\,A_n\,P_s\,60\,(1-B_{ws})}$$

$$= K_5 \frac{T_s\,V_{m(std)}}{P_s\,v_s\,A_n\,\theta\,(1-B_{ws})} \qquad \text{Equation 8-5}$$

where:

K_5 = 4.320 for metric units.

= 0.09450 for English units.

6.8 Acceptable Results. If 90 percent $\leq$ I $\leq$ 110 percent, the results are acceptable. If the results are low in comparison to the standards and I is beyond the acceptable range, the Administrator may opt to accept the results. Use Citation 4 in the Bibliography of Method 5 to make judgments. Otherwise, reject the results and repeat the test.

7. Bibliography

1. Atmospheric Emissions from Sulfuric Acid Manufacturing Processes. U. S. DHEW, PHS, Division of Air Pollution. Public Health Service Publication No. 999-AP-13. Cincinnati, Ohio. 1965.

2. Corbett, P. F. The Determination of SO_2 and SO_3 in Flue Gases. Journal of the Institute of Fuel. 24:237-243. 1961.

3. Martin, Robert M. Construction Details of Isokinetic Source Sampling Equipment. Environmental Protection Agency. Research Triangle Park, N. C. Air Pollution Control Office Publication No. APTD-0581. April, 1971.

4. Patton, W. F. and J. A. Brink, Jr. New Equipment and Techniques for Sampling Chemical Process Gases. Journal of Air Pollution Control Association. 13:162. 1963.

5. Rom, J. J. Maintenance, Calibration, and Operation of Isokinetic Source-Sampling Equipment. Office of Air Programs, Environmental Protection Agency. Research Triangle Park, N. C. APTD-0576. March, 1972.

6. Hamil, H. F. and D. E. Camann. Collaborative Study of Method for Determination of Sulfur Dioxide Emissions from Stationary

Sources (Fossil Fuel-Fired Steam Generators). Environmental Protection Agency. Research Triangle Park, N. C. EPA-650/4-74-024. December, 1973.

7. Annual Book of ASTM Standards. Part 31; Water, Atmospheric Analysis. pp. 40-42. American Society for Testing and Materials. Philadelphia, Pa. 1974.

FIELD DATA SHEETS

PART II

TRAVERSE POINT LOCATION FOR CIRCULAR DUCTS

PLANT _____
DATE _____
SAMPLING LOCATION _____
INSIDE OF FAR WALL TO
OUTSIDE OF NIPPLE, (DISTANCE A) _____
INSIDE OF NEAR WALL TO
OUTSIDE OF NIPPLE, (DISTANCE B) _____
STACK I.D., (DISTANCE A - DISTANCE B) _____
NEAREST UPSTREAM DISTURBANCE _____
NEAREST DOWNSTREAM DISTURBANCE _____
CALCULATOR _____

SCHEMATIC OF SAMPLING LOCATION

TRAVERSE POINT NUMBER	FRACTION OF STACK I.D.	STACK I.D.	PRODUCT OF COLUMNS 2 AND 3 (TO NEAREST 1/8 INCH)	DISTANCE B	TRAVERSE POINT LOCATION FROM OUTSIDE OF NIPPLE (SUM OF COLUMNS 4 & 5)

METHOD 2 GAS VELOCITY AND VOLUME DATA

1.

PLANT AND CITY	RUN DATE

SAMPLING LOCATION	CLOCK TIME

2.

RUN NUMBER	OPERATOR	AMB. TEMP. (°F)	BAR. PRESS (in. Hg)	STATIC PRESS (in. H_2O)

MOLECULAR WT.	STACK INSIDE DIMENSION (in.)		PITOT TUBE Cp
	DIAM OR SIDE 1	SIDE 2	

FIELD DATA

TRAVERSE POINT NUMBER	POSITION (in.)	VELOCITY HEAD (Δp_s), in. H_2O	STACK TEMP., °F	CYCLONIC FLOW DETERMINATION	
				Δp_s at 0° REFERENCE	ANGLE (α) WHICH YIELDS A NULL Δp
				AVERAGE ANGLE (α)	

Average of (α) must be less than 10 degrees to be acceptable.

METHOD 2 PITOT TUBE CALIBRATION

PITOT TUBE IDENTIFICATION NUMBER: _____ DATE: _____

CALIBRATED BY: _____

	"A" SIDE CALIBRATION			
RUN NO.	Δp_{std} cm H_2O (in. H_2O)	$\Delta p_{(s)}$ cm H_2O (in. H_2O)	$C_{p(S)}$	DEV.
1				
2				
3				
		AVERAGE		

	"B" SIDE CALIBRATION"			
RUN NO.	Δp_{std} cm H_2O (in. H_2O)	$\Delta p_{(s)}$ cm H_2O (in. H_2O)	$C_{p(S)}$	DEV.
1				
2				
3				
		AVERAGE		

DEV. = $\frac{C_{p(S)} - C_{p(S)(avg.)}}{}$ (MUST BE $\leq$ 0.01)

C_p DIFFERENCE: $A_{avg} - B_{avg}$ = _____ (MUST BE $\leq$ 0.01)

NOTE: Not required if pitot tube meets geometry standards.

Integrated Bag Sampling Field Data

Run No. _____

Date _____ Plant _____

Sampling location _____

Barometric pressure _____ " Hg.

Ambient temp. °F _____ Stack temp. °F _____

Operator _____

Sample bag leak checked _____ Sample train leak checked _____

Time	Traverse point	Rate meter flow rate, Q cm^3/min.	% Dev.[a]	Fyrite,	
				O_2	CO_2

DRY MOLECULAR WEIGHT DETERMINATION

PLANT _____

DATE _____ TEST NO _____

SAMPLING TIME (24-hr CLOCK) _____

SAMPLING LOCATION _____

SAMPLE TYPE (BAG, INTEGRATED, CONTINUOUS) _____

ANALYTICAL METHOD _____

AMBIENT TEMPERATURE _____

OPERATOR _____

ORSAT LEAK CHECKED _____

COMMENTS:

RUN / GAS	1		2		3		AVERAGE NET VOLUME	MULTIPLIER	MOLECULAR WEIGHT OF STACK GAS (DRY BASIS) M_d, lb lb-mole
	ACTUAL READING	NET	ACTUAL READING	NET	ACTUAL READING	NET			
CO_2								44/100	
O_2 (NET IS ACTUAL O_2 READING MINUS ACTUAL CO_2 READING)								32/100	
CO (NET IS ACTUAL CO READING MINUS ACTUAL O_2 READING)								28/100	
N_2 (NET IS 100 MINUS ACTUAL CO READING)								28/100	
								TOTAL	

PLANT _____
LOCATION _____
OPERATOR _____
DATE _____
RUN NO. _____
AMBIENT TEMPERATURE _____
BAROMETRIC PRESSURE _____
PROBE LENGTH m(ft) _____

PROBE MATERIAL _____
SAMPLE BOX NO. _____
METER BOX NO. _____
METER ΔH@ _____
METER CAL. (Y) _____
FINAL LEAK RATE _____
VACUUM DURING LEAK CHECK _____

	IMPINGER VOLUME, ml	SILICA GEL WEIGHT, g
FINAL		
INITIAL		

TRAVERSE POINT NUMBER	SAMPLING TIME, (θ) MIN.	STACK TEMPERATURE, °C(°F)	PRESSURE DIFFERENTIAL ACROSS ORIFICE METER (ΔH), mm(in.)H_2O	METER READING GAS SAMPLE VOLUME, $m^3(ft^3)$	ΔV_m^* $m^3(ft^3)$	GAS SAMPLE TEMPERATURE AT DRY GAS METER		TEMPERATURE OF GAS LEAVING CONDENSER OR LAST IMPINGER, °C(°F)
						INLET (T_{min})°C(°F)	OUTLET (Tm_{out})°C(°F)	
TOTAL								
AVERAGE								

* Acceptable $\Delta V_m = 0.9 < \frac{(V\ final - V\ initial)}{(number\ of\ pts.)} < 1.1$ _____ to _____.

Method 4 Field Data and Sample Recovery Data Sheet

Plant _____
City _____
Location _____
Operator _____
Date _____
Run No. _____
Stack diam. mm (in.) _____
_____
Sample Box No. _____
Meter Box No. _____
Meter ΔH@ _____

Meter Calibration (Y) _____
Pitot Tube (C_p) _____
Probe Length _____
Probe Liner Material _____
Probe Heater Setting _____
Ambient Temperature _____
Barometric Pressure (P_b) _____ mm Hg (in. Hg)
Assumed Moisture _____
Static Pressure (P_s) _____ mm H_2O (in. H_2O)
C Factor _____
Reference ΔP _____ mm H_2O (in. H_2O)

Sheet _____ of _____
Nozzle Identification No. _____
Nozzle Diameter _____ mm (in.)
Therm. No. _____
Final Leak Rate _____ M^3/min. (cfm)
Vacuum During Leak Check _____
_____ mm Hg (in. Hg)
Filter No. _____
Remarks: _____

Traverse point number	Sampling time, (θ), min.	Clock time, (24 hr)	Vacuum mm Hg (in. Hg)	Stack temperature (T_s), °C (°F)	Velocity head (ΔP_s), mm H_2O (in. H_2O)	Pressure differential across orifice meter (ΔH) mm H_2O (in. H_2O)	Gas sample volume (V_m) m^3 (ft^3)	Gas sample temperature at dry gas meter		Temperature of gas leaving condenser or last impinger, °C (°F)	Filter temp., °C (°F)
								Inlet, °C (°F)	Outlet, °C (°F)		
	Total		Max.	Avg.			Total	Avg.	Avg.	Max.	

Method 5 field test data form.

METHOD 5

PARTICULATE SAMPLE RECOVERY AND INTEGRITY SHEET

Plant: _____ Sample date: _____

Sample location: _____ Run no.: _____

Sample recovery person: _____ Recovery date: _____

Filter(s) no.: _____

MOISTURE

Impingers			Silica gel		
Final volume (wt)	_____	ml(gm)	Final wt.	_____g	_____g
Initial volume (wt)	_____	ml(gm)	Initial wt.	_____g	_____g
Net volume (wt)	_____	ml(gm)	Net wt.	_____g	_____g

Total moisture _____g

Color of silica gel _____

Description of impinger water _____

_____

RECOVERED SAMPLE

Filter container no. _____ sealed _____

Description of particulate on filter _____

_____

Acetone rinse container no. _____ Liquid level marked _____

Acetone blank container no. _____ Liquid level marked _____

Samples stored and locked _____

Remarks: _____

_____

Date of laboratory custody _____

Laboratory personnel taking custody _____

Remarks: _____

_____

BLANK ANALYTICAL DATA

Plant _____

Sample location _____

Relative humidity _____

Type of blank _____

Liquid level at mark and container sealed _____

Density of blank (ρa) _____ g/ml

Blank volume (Va) _____ ml

Date and time of wt. _____ Gross wt. _____ mg

Date and time of wt. _____ Gross wt. _____ mg

Average gross wt. _____ mg

Tare wt. _____ mg

Weight of blank (ma) _____ mg

$$Ca = \frac{ma}{Va\ \rho a} = \frac{(\qquad)}{(\qquad)(\qquad)} = _____ \text{ mg/g}$$

Note: In no case shall a blank residue greater than (0.01 mg/g) or 0.001% of the weight of blank used be subtracted from the sample weight.

Remarks: _____

_____

Signature of analyst _____

Signature of reviewer _____

METHOD 5 TRAIN ANALYTICAL PARTICULATE DATA

Plant _____ Run No. _____

Sample location _____

Relative humidity _____

Density of acetone (ρa) _____ g/ml

Sample type	Sample identifiable	Liquid level marked and/or container sealed
Acetone rinse		
filter(s)		

Acetone rinse container no. _____

Acetone rinse volume (Vaw) _____ ml

Acetone blank residue concentration (Ca) _____ mg/g

Wa = Ca Vaw ρa = ( )( )( ) = _____ mg

Date and time of wt _____ Gross wt _____ mg

Date and time of wt _____ Gross wt _____ mg

Average gross wt _____ mg

Tare wt _____ mg

Less acetone blank wt (Wa) _____ mg

Weight of particulate in acetone rinse _____ mg

Filter(s) container no. _____

Date and time of wt _____ Gross wt _____ mg

Date and time of wt _____ Gross wt _____ mg

Average gross wt _____ mg

Tare wt _____ mg

Weight of particulate on filter(s) _____ mg

Weight of particulate in acetone rinse _____ mg

Total weight of particulate _____ mg

Note: In no case shall a blank residue greater than (.01 mg/g) or .001% of the weight of acetone used be subtracted from the sample weight.

Remarks: _____

_____

Signature of analyst _____

Signature of reviewer _____

NOZZLE CALIBRATION

Date_____ Calibrated by_____

Nozzle identification number	D_1, in.	D_2, in.	D_3, in.	ΔD, in.	D_{avg}

where:

$D_{1,2,3,}$ = nozzle diameter measured on a different diameter, in.
Tolerance = measure within 0.001 in.

ΔD = maximum difference in any two measurements, in.
Tolerance = 0.004 in.

D_{avg} = average of D_1, D_2, and D_3.

Nozzle calibration data.

CALIBRATION

DRY GAS METER & ORIFICE

DATE_____ **METER BOX NO.**_____

BAROMETRIC PRESSURE, P_b =_____**in. Hg.** **DRY GAS METER NO.**_____

Orifice manometer setting ΔH in. H_2O	Gas volume wet test meter V_w, ft^3	Gas volume dry gas meter V_d, ft^3	Wet test Meter t_w, °F	Dry gas meter Inlet t_{di}, °F	Dry gas meter Outlet t_{do}, °F	Dry gas meter Average t_d, °F	Time θ, min.	γ	$\Delta H@$
0.5	5								
1.0	5								
1.5	10								
2.0	10								
3.0	10								
4.0	10								

Average _____

ΔH	$\frac{\Delta H}{13.6}$	γ $\frac{V_w P_b (t_d + 460)}{V_d (P_b + \frac{\Delta H}{13.6}) (t_w + 460)}$	$\Delta H@$ $\frac{0.0317 \Delta H}{P_b (t_d + 460)} \left[\frac{(t_w + 460) \theta}{V_w} \right]^2$
0.5	0.0368		
1.0	0.0737		
1.5	0.110		
2.0	0.147		
3.0	0.221		
4.0	0.294		

γ = Ratio of accuracy of wet test meter to dry test meter.

$\Delta H@$ = Orifice of pressure differential that gives 0.75 cfm of air at 70°F and 29.92 inches of mercury, in. H_2O.

POST TEST METER CALIBRATION

Date _____ Plant _____

Barometric pressure, P_b = _____"Hg P/N _____

Meter Box No. _____ Project Manager _____

Dry Gas Meter No. _____ Pretest Y _____

Test No.	Orifice manometer setting, ΔH, in H_2O	Gas volume wet test meter V_w, ft^3	Gas volume dry gas meter V_d, ft^3	Temperature: Wet test Meter t_w, °F	Temperature: Dry gas meter: Inlet t_{di}, °F	Temperature: Dry gas meter: Outlet t_{do}, °F	Temperature: Dry gas meter: Average[a] t_d, °F	Time θ, min.	Vacuum setting in Hg	Yi	Yi: $\frac{V_w P_b (t_d + 460)}{V_d\left(P_b + \frac{\Delta H}{13.6}\right)\left(t_w + 460\right)}$
		10									
		10									
		10									

Post-test y =

Calibrated by _____
Signature

[a] If there is only one therometer on the dry gas meter record the temperature under t_d.

where:

V_w = Gas volume passing through the wet test meter, ft^3.

V_d = Gas volume passing through the dry test meter, ft^3.

t_w = Temperature of the gas in the wet test meter, °F.

t_{d_i} = Temperature of the inlet gas of the dry test meter, °F.

t_{d_o} = Temperature of the outlet gas of the dry test meter, °F.

t_d = Average temperature of the gas in the dry test meter, obtained by the average of t_{d_i} and t_{d_o}, °F.

ΔH = Pressure differential across orifice, in H_2O.

Y_i = Ratio of accuracy of wet test meter to dry test meter for each run.

Y = Average ratio of accuracy of wet test meter to dry test meter for all three runs.
Tolerance = Pretest Y ±0.05 Y.

P_b = Barometric pressure, in. Hg

θ = Time of calibration run, minutes.

Date: _____ Thermocouple No.: _____

Ambient Temperature: _____ °C Barometric pressure: _____" Hg

Calibrator: _____ Reference: Mercury-in-glass: _____

Other: _____

Reference point No.[a]	Source[b] (specify)	Reference thermometer temperature, °C	Thermocouple potentiometer temperature, °C	Difference,[c] %

[a] Every 30°C (50°F) for each reference point
[b] Type of Calibration system used
[c] $\frac{(\text{Ref. temp: °C} + 273) - (\text{Test therm. temp. °C} + 273)}{\text{Ref. temp. °C} + 273} \times 100 \leq 1.5\%$

Stack Temperature Sensor Calibration Data Sheet

PLANT NAME _____ CITY _____

SAMPLE LOCATION _____ DATE _____

OPERATOR _____ SAMPLE NO. _____

BAROMETRIC PRESSURE mm Hg (in Hg) _____ PROBE LENGTH m(ft) _____

PROBE MATERIAL _____ PROBE HEATER SETTING _____

METER BOX NO. _____ METER CALIBRATION FACTOR (Y) _____

AMBIENT TEMP. °C _____ SAMPLE POINT LOCATION _____

INITIAL LEAK CHECK _____ SAMPLE PURGED (min) _____

FINAL LEAK CHECK _____ REMARKS: _____

Sampling Time (min)	Clock Time (24 hr)	Sample Volume l(ft^3)	Sample flow rate setting lpm (cfm)	Sample volume metered Δ Vml (ft^3)	Percent Deviation % (±)	Dry gas meter temp. °C (°F)	Impinger temperature °C (°F)
Total		Total		ΔVm avg.	Max. Dev.	Avg.	Max. Temp.

±) Percent deviation (%) = $\left| \frac{\Delta V_m - \Delta V_m \text{ avg.}}{\Delta V_m \text{ avg.}} \right| \times 100$

METHOD 6 Field sampling data sheet for SO_2.

METHOD 6 SAMPLE RECOVERY AND INTEGRITY DATA

PLANT _____ SAMPLE LOCATION _____

FIELD DATA CHECKS

SAMPLE RECOVERY PERSONNEL _____

PERSON WITH DIRECT RESPONSIBILITY FOR RECOVERED SAMPLES _____

Sample no.	Sample identification no.	Date of recovery	Liquid level marked	Stored in locked container
1				
2				
3				
4				
5				
6				
Blank				

REMARKS _____

_____

SIGNATURE OF FIELD SAMPLE TRUSTEE _____

LABORATORY DATA CHECKS

LAB PERSON WITH DIRECT RESPONSIBILITY FOR RECOVERED SAMPLES _____

DATE RECOVERED SAMPLES RECEIVED _____

ANALYST _____

Sample no.	Sample identification no.	Date of analysis	Liquid at marked level	Sample identified
1				
2				
3				
4				
5				
6				
Blank				

REMARKS _____

_____

SIGNATURE OF LAB SAMPLE TRUSTEE _____

METHOD 6

SULFUR DIOXIDE ANALYTICAL DATA

PLANT_____ DATE_____

SAMPLE LOCATION_____ ANALYST_____

NORMALITY OF BARIUM PERCHLORATE

1_____ ml_____ N

2_____ ml_____ N _____N

3_____ ml_____ N

Run No.	Sample No.	Total Volume of Sample	Sample Aliquot	Volume of Titrant V_t, ml		
				1st Titration	2nd Titration	Average
1						
2						
3						
4						
5						
6						

Blank Analysis - Volume of titrant 1st titration_____

2nd titration_____

Average_____

$\frac{\text{1st titration}}{\text{2nd titration}}$ = 0.99 to 1.01 or 1st titration - 2nd titration = 0.2 ml

Signature of Analyst_____

Signature of Reviewer or Supervisor_____

Plant _____ City _____

Sample location _____ Date _____

Operator _____ Barometric Pressure (Pbar) _____ in. Hg

Sample No.	Sample point location	Sample time 24-hr	Probe temperature, °F	Flask and valve, No	Volume of flask and valve, ml	Initial Pressure in. Hg			Inital Temperature	
						Leq Ai	Leq Bi	Pi[a]	°F (ti)[a]	°R (Ti)[b]

[a] Pi = Pbar - (Ai + Bi)

[b] Ti = ti + 460°F

METHOD 7 Nitrogen Oxide Field Data Sheet

Plant _____ Date _____

Sample Recovery Personnel _____ Barometric Pressure, (P_{bar}) _____ in. Hg

Person with direct responsibility for recovered samples _____

Sample No.	Final Pressure in. Hg			Final Temperature		Sample recovery time, 24-hr	pH adjusted 9 to 12	Liquid level marked	Samples stored in locked container
	Leq A_f	Leq B_f	P_f	°F (t_f)	°R (T_f)				

$P_f = P_{bar} - (A_f + B_f)$ $T_f = t_f + 460°F$

Lab person with direct responsibility for recovered samples _____

Date recovered samples received _____ Analyst _____

All samples identifiable _____ All liquids at marked level _____

Remarks _____

Signature of lab sample trustee _____

METHOD 7 NO_x Sample Recovery and Integrity Data Sheet

NO_x LABORATORY DATA FORM

Plant _____ Run No.(s) _____

Date samples received _____ Date analyzed _____

Aliquot factor _____ Samples analyzed by _____

Blank absorbance _____ Data reviewed by _____

Calibration factor (K_c) _____ Date of review _____

Sample No.	Sample absorbance A	Dilution factor F	Total mass of NO_x at NO_2 in sample m

m = 2 K_c AF, Note: If other than a 25 ml aliquot is used for analysis, the factor 2 must be replaced by a corresponding factor.

METHOD 7 ANALYTICAL DATA SHEET

OPTIMUM WAVELENGTH DETERMINATION

Spectrophotometer No. _____ Date _____

Calibrated by _____ Reviewed by _____

Spectrophotometer setting, nm	Absorbance of standard OD[a]	Absorbance of blank OD[b]	Actual absorbance of OD[c]
399 400 401			
402 403 404			
405 406 407			
408 409 410			
411 412 413			
414 415 416			

[a] Absorbance of the 200 μg NO_2 standard in a single beam spectrophotometer.

[b] Absorbance of the blank in a single beam spectrophotometer.

[c] For a single beam spectrophotometer - absorbance of the standard minus absorbance of the blank. For a double beam spectrophotometer - absorbance of the 200 μg NO_2 standard with the blank in the reference cell.

Spectrophotometer setting for maximum actual absorbance of standard (nm) _____

If the maximum actual absorbance occurs at a spectrophotometer setting of 399 or 416 nm, the spectrophotometer must be repaired or recalibrated.

METHOD 7 Optimum Wavelength Determination Data Sheet.

Plant _____ Probe Length _____ Sheet ____ of _____

Location _____ Probe Liner Material _____ Nozzle Identification No. _____

Operator _____ Probe Heater Setting _____ Nozzle Diameter _____

Date _____ Ambient Temperature _____ Final Leak Rate _____

Run No. _____ Barometric Pressure _____ Vacuum During Leak Check _____

Sample Box No. _____ Assumed Moisture _____ Remarks: _____

Meter Box No. _____ Static Pressure _____

Meter ΔH@ _____ C Factor _____

Meter Calibration Y _____ Reference ΔP _____

Pitot Tube CP _____ Maximum ΔH _____

Traverse Point Number	Sampling Time (θ), min.	Clock Time (24 hour)	Vacuum (in. Hg)	Stack Temperature (T_s), °C(°F)	Velocity Head (ΔP_s), mm H_2O (in. H_2O)	Pressure Differential Across Orifice Meter, mm H_2O (in. H_2O)	Gas Sample Volume, m^3 (ft^3)	Gas Sample Temperature at Dry Gas Meter		Temperature of Gas Leaving Condenser or Last Impinger, °C (°F)
								Inlet, °C (°F)	Outlet, °C (°F)	

Method 8 Field Data Form

PLANT _____ SAMPLE LOCATION _____

FIELD DATA CHECKS

SAMPLE RECOVERY PERSONNEL _____

PERSON WITH DIRECT RESPONSIBILITY FOR RECOVERED SAMPLES _____

Sample no.	Sample identification no.		Date of recovery	Liquid level marked	Stored in locked container
	H_2SO_4	SO_2			
1					
2					
3					
BLANKS					

REMARKS

SIGNATURE OF FIELD SAMPLE TRUSTEE _____

LABORATORY DATA CHECKS

LAB PERSON WITH DIRECT RESPONSIBILITY FOR RECOVERED SAMPLES _____

DATE RECOVERED SAMPLES RECEIVED _____

ANALYST _____

Sample no.	Sample identification no.		Date of analysis	Liquid at marked level	Sample identified
	H_2SO_4	SO_2			
1					
2					
3					
BLANKS					

REMARKS

SIGNATURE OF LAB SAMPLE TRUSTEE _____

METHOD 8 Sample recovery and integrity data.

PLANT _____ DATE _____

SAMPLE LOCATION _____ ANALYST _____

NORMALITY OF BARIUM PERCHLORATE

1. _____ ml $Ba(ClO_4)_2$
2. _____ ml $Ba(ClO_4)_2$ N(Avg.) =
3. _____ ml $Ba(ClO_4)_2$ _____

SULFURIC ACID MIST (INCLUDING SULFUR TRIOXIDE) ANALYSIS

		Run 1	Run 2	Run 3
V_{soln} - Total volume of solution in which the sulfuric acid sample is contained, ml				
V_a - Volume of sample aliquot, ml				
V_t - Volume of barium perchlorate titrant used for sample, ml	1st titration			
	2nd titration			
	Average			
V_{tb} - Volume of barium perchlorate titrant used for blank, ml	1st titration			
	2nd titration			
	Average			

$\frac{\text{1st titration}}{\text{2nd titration}}$ = 0.99 to 1.01 or |1st titration - 2nd titration| ≤ 0.2 ml

SULFUR DIOXIDE ANALYSIS

		Run 1	Run 2	Run 3
V_{soln} - Total volume of solution in which the sulfur dioxide sample is contained, ml				
V_a - Volume of sample aliquot, ml				
V_t - Volume of barium perchlorate titrant used for sample, ml	1st titration			
	2nd titration			
	Average			
V_{tb} - Volume of barium perchlorate titrant used for blank, ml	1st titration			
	2nd titration			
	Average			

$\frac{\text{1st titration}}{\text{2nd titration}}$ = 0.99 to 1.01 or |1st titration - 2nd titration| ≤ 0.2 ml

SIGNATURE OF ANALYST _____

SIGNATURE OF REVIEWER OR SUPERVISOR _____

Method 8 analytical data sheet.

Plant: _____ City: _____

Site: _____ Sam. Type: _____

Date: _____ Run No: _____

Front Rinse ☐ Front Filter ☐ Front Solu ☐

Back Rinse ☐ Back Filter ☐ Back Solu ☐

Solution: _____ Level Marked _____

Volume: Initial _____ Final _____

Clean Up By: _____

Remarks: _____

Example sample label.

* U.S. GOVERNMENT PRINTING OFFICE: 1978--640-013/4167 Region No. 4

NOVEMBER 9

TECHNICAL REPORT DATA
(Please read Instructions on the reverse before completing)

1 REPORT NO	2	3 RECIPIENT'S ACCESSION NO.
4 TITLE AND SUBTITLE Field Sampling Manual		5 REPORT DATE September 1978 6 PERFORMING ORGANIZATION CODE
7 AUTHOR(S)		8 PERFORMING ORGANIZATION REPORT NO. P/N 3370-2-K
9 PERFORMING ORGANIZATION NAME AND ADDRESS PEDCo Environmental, Inc. 11499 Chester Road Cincinnati, Ohio 45246		10 PROGRAM ELEMENT NO. 11 CONTRACT/GRANT NO 68-01-4147, Task 54
12. SPONSORING AGENCY NAME AND ADDRESS Division of Stationary Source Enforcement U.S. Environmental Protection Agency Washington, D.C. 20460		13 TYPE OF REPORT AND PERIOD COVERED Final 14. SPONSORING AGENCY CODE

15. SUPPLEMENTARY NOTES

DSSE Project Officer: K. Foster

16. ABSTRACT

The field sampling manual was designed to provide field enforcement personnel with a source sampling reference manual suitable for field use. It contains a double-spaced, typed version of the EPA New Source Performance Standards Test Methods 1 through 8 and sample data sheets specifically designed for use with the revised methods to obtain all necessary information.

17. KEY WORDS AND DOCUMENT ANALYSIS

a DESCRIPTORS	b IDENTIFIERS/OPEN ENDED TERMS	c COSATI Field/Group
Air Pollution Emission Measurements Enforcement	Field Manual Source Sampling New Source Performance Standards	13B 14D

18 DISTRIBUTION STATEMENT Unlimited	19 SECURITY CLASS *(This Report)* Unclassified	21 NO. OF PAGES 204 p.
	20 SECURITY CLASS *(This page)* Unclassified	22 PRICE

EPA Form 2220-1 (9-73)

J.S. ENVIRONMENTAL PROTECTION AGENCY
Office of Administration
Library Services Office
MD 35
Research Triangle Park, N.C. 27711

OFFICIAL BUSINESS
PENALTY FOR PRIVATE USE, $300
AN EQUAL OPPORTUNITY EMPLOYER

POSTAGE AND FEES PAID
U.S. ENVIRONMENTAL PROTECTION AGENCY
EPA-335

U.S.MAIL

If your address is incorrect, please change on the above label; tear off; and return to the above address.
If you do not desire to continue receiving this technical report series, CHECK HERE ☐; tear off label, and return it to the above address.

PUBLICATION NO. EPA-340/1-78-011