EPA-650/4-74-019-a
June 1974

Environmental Monitoring Series

COLLABORATIVE TESTING OF METHODS FOR MEASUREMENTS OF NO_2 IN AMBIENT AIR VOLUME 1 - REPORT OF TESTING

Office of Research and Development
U.S. Environmental Protection Agency
Washington, DC 20460

EPA-650/4-74-019-a

COLLABORATIVE TESTING OF METHODS FOR MEASUREMENTS OF NO_2 IN AMBIENT AIR VOLUME 1 - REPORT OF TESTING

by

Paul C. Constant, Jr., Michael C. Sharp and George W. Scheil

Midwest Research Institute
425 Volker Boulevard
Kansas City, Missouri 64110

Contract No. 68-02-1363
ROAP No. 26AAF
Program Element No. 1HA327

EPA Project Officer: John H. Margeson

Quality Assurance and Environmental Monitoring Laboratory
National Environmental Research Center
Research Triangle Park, North Carolina 27711

Prepared for

OFFICE OF RESEARCH AND DEVELOPMENT
U.S. ENVIRONMENTAL PROTECTION AGENCY
WASHINGTON, D.C. 20460

June 1974

This report has been reviewed by the Environmental Protection Agency and approved for publication. Approval does not signify that the contents necessarily reflect the views and policies of the Agency, nor does mention of trade names or commercial products constitute endorsement or recommendation for use.

FOREWORD

This program, "Collaborative Testing of Methods for Measurement of NO_2 in Ambient Air," is being conducted under the Environmental Protection Agency (EPA) Contract No. 68-02-1363, which is Midwest Research Institute (MRI) Project No. 3823-C. The program is concerned with the evaluation of the following four methods with regard to their reliability and bias:

1. Sodium-Arsenite,
2. TGS-ANSA,
3. Continuous-Saltzman, and
4. Chemiluminescence.

The collaborative study covered by this two-volume report is of the sodium-arsenite procedure, which is a tentative manual method. In summary, MRI's responsibility was to develop an NO_2, ambient-air sampling system for use with the four methods, provide the test site and facilities thereon where the collaborative tests would be conducted, select the collaborators with regard to the program, prepare a plan of test for the collaborative test, schedule testing, coordinate the test, retrieve field data and results from the collaborators' analysis of their samples, statistically analyze their results, and report its findings to EPA. The 10 collaborators who participated in the sodium-arsenite collaborative test are:

Air and Industrial Hygiene Laboratory
California Department of Health
2151 Berkeley Way
Berkeley, California 94704

Kansas City Pollution Control Laboratory
2 Northeast 32nd Street
Kansas City, Missouri 64116

Kennecott Copper Corporation
Post Office Box 11299
Salt Lake City, Utah 84111

Los Angeles County
Air Pollution Control District
434 South San Pedro Street
Los Angeles, California 90013

Kentucky Division of Air Pollution
311 East Main Street
Frankfort, Kentucky 40601

Mecklenburg County Health Department
1200 Blythe Boulevard
Charlotte, North Carolina 28203

National Bureau of Standards
B 326 Chemistry Building
Washington, D.C. 20234

Institute of Gas Technology
3424 South State Street
Chicago, Illinois 60616

City of Philadelphia
Air Management Services Laboratory
1501 East Lycoming Street
Philadelphia, Pennsylvania 19124

Texas Air Control Board
8520 Shoal Creek Boulevard
Austin, Texas 79758

This volume, Volume 1 of the report of test, summarizes MRI's and the collaborators' activities. It describes the development of the NO_2, ambient-air sampling system, which covers the general concept of the system, design considerations, the design of the system and the system checkout. Following this there are discussions on the test site, the selection of collaborators, the formal statistical design including the presentation of factors and parameters that were considered, the collaborators' field sampling at the test site, the collaborators' analysis of their samples--both test and standard samples--MRI's statistical analyses of the collaborators' results, conclusions and recommendations. Appendices contain a copy of the tentative, sodium-arsenite method, information on the permeation tubes prepared for this program by the National Bureau of Standards, calibration of components of the sampling system, written communiques with collaborators, instructions for collaborators, MRI's field, operational, data-log sheets, and collaborators' analysis instrumentation and comments.

Volume 2 of this report of tests contains only the collaborators' field data sheets for the four-run, 240-test sample, collaborative test.

The following individuals of the collaborating organizations are acknowledged for their excellent work in the sodium-arsenite collaborative test:

Texas Air Control Board
Mr. Fernando Martinez, field sampling and laboratory analysis

National Bureau of Standards
Mr. Bob Deardorff, field sampling and laboratory analysis

Mecklenburg County Health Department
Mr. James T. Ward, field sampling and laboratory analysis

Kentucky Division of Air Pollution
Ms. Diana Dunker, field sampling and laboratory analysis

California Department of Health
Mr. Kenneth Smith, field sampling and laboratory analysis

Kennecott Copper Corporation
Mr. Lynn Hutchinson, field sampling and laboratory analysis

City of Philadelphia
Mr. Donald Kutys, field sampling and laboratory analysis

Los Angeles County Air Pollution Control District
Mr. Abe Moore, field sampling
Ms. Violeta Vita, laboratory analysis

Kansas City Air Pollution Control Laboratory
Mr. Glenn Smith, field sampling and laboratory analysis

Institute of Gas Technology
Mr. Jon Zimmer, field sampling
Ms. Eugenia Mann, laboratory analysis

Special acknowledgements are made to the National Bureau of Standards and to Mr. Ernest E. Hughes and Dr. John K. Taylor of NBS who provided the NO_2 permeation tubes for this collaborative test; and to Dr. John B. Clements, Chief, Methods Standardization Branch, National Environmental Research Center, Environmental Protection Agency, and Mr. John H. Margeson, Government Project Officer, Methods Standardization Branch, for their valuable suggestions in planning and design.

This MRI collaborative program is being conducted under the management and technical supervision of Paul C. Constant, Jr., Head, Environmental Measurements Section of MRI's Physical Sciences Division, who is the Program Manager. Those who contributed to this test are: development of the NO_2, ambient-air sampling system - Dr. Chatten Cowherd, Jr., Mr. Fred Bergman, Mr. Emile Baladi, and Mr. Wallace Yocum; experimental design and statistical analysis - Mr. Michael C. Sharp; and preparation and operation of test facilities - Dr. George W. Scheil, Mr. John LaShelle, Mr. Donald Cushing, and Mr. Edward Cartwright, Jr.

Approved for:

MIDWEST RESEARCH INSTITUTE

H. M. Hubbard, Director
Physical Sciences Division

9 September 1974

TABLE OF CONTENTS

		Page
Summary		1
I.	Introduction	3
II.	NO_2 Ambient-Air Sampling System	4
	A. General Concept	4
	B. Design Consideration	6
	C. System Design	7
	D. System Checkout	18
III.	Test Site	23
IV.	Selection of Collaborators	25
V.	Statistical Design	29
	A. General Considerations and Comments	29
	B. The Formal Design	31
VI.	Collaborators' Field Sampling	33
VII.	Analyses of Samples	39
	A. Analyses Performed by the Collaborators	39
	B. Collaborators' Results	40
	C. Analysis of Samples by MRI	40
	D. Test Site Operational Measurement Data	43
VIII.	Statistical Analysis of Collaborators' Results	43
	A. Analysis of the Spiked NO_2 Measurements	49
	B. Summary Discussion	53
	C. Analysis of the Unspiked Ambient NO_2 Measurements	54
IX.	Conclusions	55
X.	Recommendations	56
Appendix A - Tentative Method for the Determination of Nitrogen Dioxide in the Atmosphere (Sodium-Arsenite Procedure)		57

TABLE OF CONTENTS (Continued)

	Page
Appendix B - Data on the Permeation Tubes Used as the Source of the Spiked Levels of NO_2.	69
Appendix C - Calibration of the Venturi and Dry-Gas Meter.	71
Appendix D - Written Communications with Potential Collaborators . .	75
Appendix E - Instructions for Collaborators - NO_2 Collaborative Test: Sodium-Arsenite Method.	79
Appendix F - NO_2, Ambient-Air Sampling System Operational Data: Test Log Sheets	87
Appendix G - Collaborators' Analysis Instrumentation and Comments. .	101

LIST OF FIGURES

No.	Title	Page
1	NO_2, Ambient-Air Sampling System Concept.	5
2	Final Design of the NO_2, Ambient-Air Sampling System.	8
3	Annotated Photographs of the NO_2, Ambient-Air Sampling System in Operation.	9
4	Ambient-Air Stream Splitter	12
5	Photographs of the NO_2 Bleed-In Unit--Assembled and Disassembled.	14
6	Schematic Drawing of the NO_2 Permeation Tube Assembly	16
7	Schematic Drawing and Photographs of the Diffuser	17
8	Schematic Drawing and Photographs of the Sampling Manifold. .	19
9	Venturi and Dry-Gas Meter Calibration System.	21
10	Collaborative Test Site: MRI's Field Station	24

LIST OF FIGURES (Concluded)

No.	Title	Page
11	Photographs of the Test Facility.	26
12	Collaborators' Sampling Areas at the Test Site.	27
13	Photograph of Field Personnel of the NO_2 Collaborative Test (Sodium-Arsenite Method); MRI Field Station; 4-8 February 1974.	34
14	Photographs of Collaborators Preparing for a Run and Their Sampling Trains in Operation.	35
15	Photographs of Collaborators' Sampling Trains	37
16	Nitrogen Dioxide Data Sheets--Sodium-Arsenite Method.	38
17	Typical Scan of Unreacted NEDA Solutions That Gave a Broad Absorption Peak at 320 nm	44
18	Typical Scan of Unreacted NEDA Solution That Gave Minor Absorption Peaks, as Well as a Major Absorption Peak at 320 nm.	45
19	Collaborator Percent Bias Per Level of NO_2.	51
A-1	Sampling Train.	67
A-2	Calibration Setup of Flowmeter.	68

LIST OF TABLES

No.	Title	Page
I	Sodium-Arsenite Collaborative Test Schedule	36
II	Collaborator Results from Collaborative Test Using the Sodium-Arsenite Method.	41
III	Data on NEDA Materials Used in the Sodium-Arsenite Method, Absorption Peak Investigation	42

TABLE OF CONTENTS (Concluded)

LIST OF TABLES (Concluded)

No.	Title	Page
IV	$\bar{R}$ Versus NO_2 Level.	47
V	Analysis of Variance (All 10 Collaborators)	48
VI	Analysis of Variance (Collaborators A and I Deleted).	48
VII	Bias ($\mu g/m^3$) Per NO_2 Level.	49
VIII	Collaborator Biases ($\mu g/m^3$) - All NO_2 Levels.	50
IX	Collaborator Percent Bias Per Level	50
X	Components of Variance (All NO_2 Levels)	52
XI	Measurement Error (σ_e) Per NO_2 Level.	53
XII	Analysis of Variance of Unspiked Ambient NO_2 Measurements . .	54
XIII	Comparison Unspiked Ambient Vs Spiked Components of Variance.	55
F-I	Run No. 1 - Operational Data and Information on Ambient Conditions at Test Site	89
F-II	Run No. 2 - Operational Data and Information on Ambient Conditions at Test Site	90
F-III	Run No. 3 - Operational Data and Information on Ambient Conditions at Test Site	91
F-IV	Run No. 4 - Operational Data and Information on Ambient Conditions at Test Site	92
G-I	Analysis Instrumentation Used by Collaborators.	102

SUMMARY

A collaborative test was conducted by MRI in the Greater Kansas City Area during the week of 4 February 1974. Ten organizations participated in this test of the "Tentative Method for the Determination of Nitrogen Dioxide in the Atmosphere (Sodium-Arsenite Procedure)." All collaborators sampled simultaneously from the NO_2, ambient-air sampling system that was developed by Midwest Research Institute (MRI) specifically for this collaborative test program. For each of the four 24-hr runs (each of a different average NO_2 level: 84.1, 113.2, 228.3 and 311.7 $\mu g/m^3$), each collaborator drew six samples simultaneously; four from the NO_2-spiked section and two from the unspiked (ambient-air) section of the sampling system. Each collaborator was given, for analysis with his test samples, two standard samples (one NO_2 and one blank) that were prepared by MRI.

The NO_2 challenge levels were obtained from permeation tubes that were developed by the National Bureau of Standards.

The collaborators analyzed the test and the standard samples at their home laboratories, and submitted their results to MRI. MRI checked the collaborators' calculated results and found no gross errors. The collaborators' results were then statistically analyzed.

The collaborators sampled from both the spiked and unspiked lines of the NO_2, ambient-air sampling system, providing two sets of collaborators' results. The two sets of results were used to determine true values of the levels of NO_2 that comprised the challenges to the collaborators' sampling trains. In addition, for both sets of results, there was an analysis of variance made to determine biases and components of variances--the variances of repeated observations and variances between collaborators.

The bias to the NO_2 determinations is relatively small--approximately 3%--and it was independent of the NO_2 level.

The major conclusions that can be drawn from the results of this collaborative test are:

1. The NO_2, ambient-air sampling system developed by MRI is an effective system for use in collaborative testing of manual methods such as the sodium-arsenite procedure.

2. The "Tentative Method for the Determination of Nitrogen Dioxide in the Atmosphere (Sodium-Arsenite Procedure)" is adequately written for those knowledgeable of sampling and analysis techniques as presented therein.

3. If the tentative sodium-arsenite procedure as given in Appendix A of this report is followed by people knowledgeable of the sampling and analysis techniques given therein, then such a person will obtain results that are on the average 6.2 $\mu g/m^3$ too low, $\pm$ 16 $\mu g/m^3$, over the range 50-300 $\mu g/m^3$. If a set of such people, each sampling independently, follow the method, then results will be on the average 6.2 $\mu g/m^3$ too low, $\pm$ 22 $\mu g/m^3$.

Based upon the conclusions that have been drawn from the results of this collaborative test, it is recommended that:

1. The same NO_2 sampling system be used in the evaluation of the remaining NO_2 methods to be tested;

2. The data sets to be obtained from the subsequent methods to be evaluated be based on experimental designs, test procedures and sampling system operational procedures as similar as possible to those of the sodium-arsenite collaborative test so that comparisons of the methods are based on similar criteria; and

3. No further analysis be made of the results from the sodium-arsenite method until the results from the other three methods are obtained.

I. INTRODUCTION

The Methods Standardization Branch, National Environmental Research Center of the Environmental Protection Agency (EPA) is engaged in a program to evaluate methods for measuring NO_2 in ambient air. Midwest Research Institute (MRI) is working for EPA under Contract No. 68-02-1363 to provide EPA data on the reliability and bias of the following four methods: sodium-arsenite and TGS-ANSA, which are manual methods; and continuous-saltzman and chemiluminescent, which are instrumental methods.

To achieve this objective, a collaborative testing program is being conducted that will assess interlaboratory as well as intralaboratory testing. In summary, MRI in the execution of this program, selects the collaborators, provides sampling locations and facilities thereon, orients the collaborators relative to the program, prepares a plan of test for each method tested, schedules testing, coordinates the collaborative tests, retrieves field data and results of the collaborators' chemical analyses of their field samples, statistically analyzes results received from the collaborators, and reports results of the program to EPA.

These activities were performed by MRI on its first test undertaken on the contract. The method investigated was the "Tentative Method for the Determination of Nitrogen Dioxide in the Atmosphere (Sodium-Arsenite Procedure)," dated November 1973. A copy of the writeup of this method is given in Appendix A.

The program was initiated on 30 June 1973, and the first collaborative test took place at MRI's field station in Kansas City, Missouri, during 4-8 February 1974 with 10 different collaborators. The interim period was devoted to the preparation for this test. A major task of the preparation activity was the development of a precise NO_2, ambient-air sampling system that could be housed indoors and be suitable for all four methods.

The two major phases of the test program were sampling and analyses. The sampling phase covered the field test where the collaborators collected their samples from the ambient-air sampling system. The analyses phase covered the chemical analyses of field samples by the collaborators and the statistical analyses of their results by MRI. After the field test, the collaborators returned to their home laboratories where they analyzed their samples and reported their results to MRI. Then MRI performed its statistical analysis and prepared this report of the sodium-arsenite collaborative test.

This report covers the collaborative test of the tentative sodium-arsenite method in the following order: Section II discusses the

NO_2, ambient-air sampling system MRI developed for this program, covering the general concept of the system, the design considerations, the system design, and the system checkout. Section III describes the test site and the facilities that were used at this site. Section IV discusses how the collaborators were selected and who they are. Section V presents the factors and parameters that were considered in the formal experimental design as well as the formal design. Section VI summarizes the test activities during the collaborative test. Section VII discusses the analyses that were performed by the collaborators. The collaborators' results are presented in this section as well as the analysis MRI conducted and the operational measurement data MRI took during the test. Section VIII discusses the statistical analysis of the collaborators' results and presents the results from this analysis, which includes biases and components of variance. Sections IX and X present conclusions and recommendations, respectively. The appendices contain a copy of the tentative sodium-arsenite method, data on the permeation tubes that were used as the source of NO_2 in the spiked section of the sampling system, information concerning the calibration of the venturi and dry-gas meter, copies of written communiques MRI had with the collaborators, a copy of the test instructions that were given to the collaborators, the NO_2, ambient-air sampling system's operational data, and collaborators' instrumentation and their comments on the method.

II. NO_2, AMBIENT-AIR SAMPLING SYSTEM

A. General Concept

In the evaluation of a method by on-site collaborative testing, it is imperative that all collaborators sample the same air. To achieve this, the following concept was used: Outdoor ambient air is drawn into the sampling system through a single tube, as shown in Figure 1. The air is divided downstream into two sections--spiked and unspiked for ambient air. A controlled flow at a specific value exists in the spiked section; a comparable amount in the unspiked section, but the latter is uncontrolled. Temperature-controlled permeation tubes provide the source of NO_2 which is injected into the spiked section at a desired level. The NO_2 is then thoroughly mixed with the ambient air in a mixing unit--a diffuser. The mixture is then equilibrated before it reaches the sampling station where the collaborators sample from identical ports--all to be subjected to the same gas flow (spiked plus ambient). A continuous monitor is attached to monitor the gas at the spiked and unspiked sampling levels to monitor the integrity of the spike. The collaborators sample ambient air simultaneously at an identical sampling manifold that is at a similar location of the unspiked section. The gas in both sections is then exhausted to the outdoors.

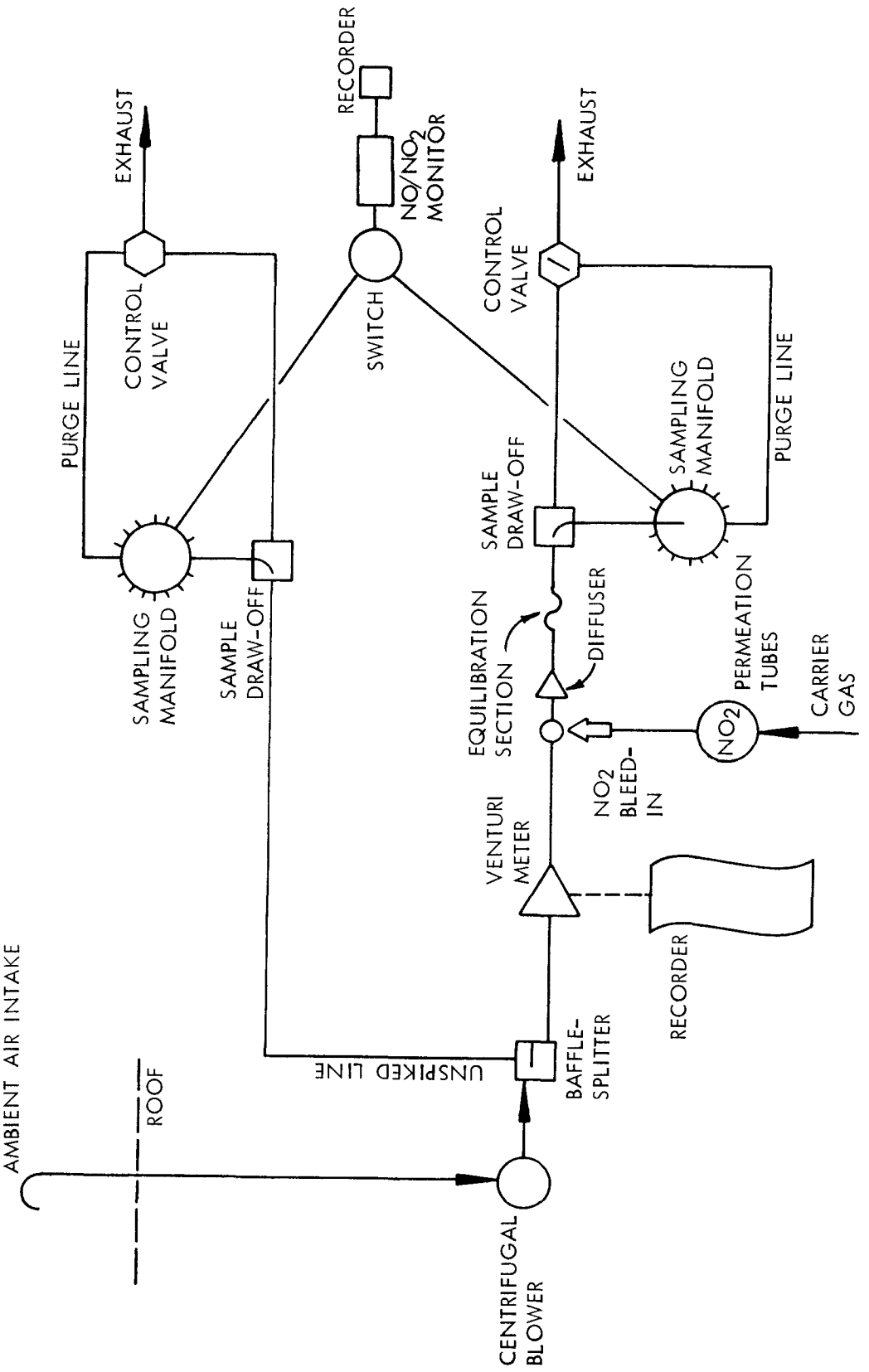

Figure 1 - NO_2, Ambient-Air Sampling System Concept

B. Design Consideration

The design of the NO_2, ambient-air sampling system was based on the following information and considerations:

1. The flow rate of each of the four methods to be tested is approximately 0.2 liter/min, with a maximum of 1 liter/min for some of the instruments that would be used in the instrumental methods.

2. The sampling period of each manual method is 24 hr; each instrumental method is preferably 24 hr, but could be less.

3. NO_2 permeation tubes whose rates are approximately 2 µg/min, which are furnished by the government, will be the source for the spiked levels of NO_2. These tubes are to be operated at 25.1°C ± 0.2°C.

4. The number of collaborators for each collaborative test is to be 10.

5. The maximum number of samples taken simultaneously by each collaborator during each run of a manual method is four spiked and two ambient (unspiked) for a total of six samples per collaborator per run. The multiplicity of samples per run--both spiked and unspiked--is to provide replicates.

6. The NO_2 range of concern is 50-300 µg/m^3, which is representative of ambient conditions.

7. There will be four different NO_2 spiked levels: high, low, and two medium. Each level will be maintained throughout the run's period, within the accuracy of the system.

8. The test period is to be no more than 6 days, which is based upon the consensus of potential collaborators surveyed.

9. The overall NO_2 sampling system accuracy is to be 5% or better.

10. The flow control in the spiked section is to be 2% or better.

11. Flow parameters of the spiked section are to be measured.

12. One NO_2/NO chemiluminescent device, switched between spiked and unspiked sampling manifolds (or stations), is to be used as a monitoring instrument.

13. Only one person from each collaborator's organization will be needed in the field for each method.

14. There is to be turbulent flow in the spiked section between the point of injection of the spiked levels of NO_2 and the diffuser to provide mixing of the spiked NO_2 with the ambient air. The diffuser insures proper mixing. Up to 20% of the stream in each section--spiked and ambient air--can be sampled to (1) insure that there is capacity in the main stream to provide each collaborator with his needs in case there is a problem with one or more collaborators drawing an excess amount and (2) allow the quantity of spiked flow to be drawn from the center of the spiked line where there is assurance of equilibration. There is to be a minimum amount of adsorption of the spiked NO_2 on surfaces, from its source to and including the sampling manifold. By using Teflon or glass as the material in which the gases come into contact and by maintaining a high gas flowrate, which allows for extremely short resident times, adsorbtivity of NO_2 on surfaces and reaction to water vapor and other losses are insignificant.

15. Each section--spiked and unspiked--is to be similar, including material and geometric aspects.

16. Each section is to be under positive pressure so that no unwanted air would be pulled into the system in case there was a leak.

17. Collaborators' equipment size, configuration and power requirements must be met.

18. Environmental effects on operation of sampling system must be considered.

C. System Design

The final design of the NO_2, ambient-air system is shown in a general schematic form in Figure 2. Annotated photographs of this operational system are given in Figure 3.

The input to the system is located outdoors about 2 m above ground level and approximately 30 m from the building. A valve at the intake of the 2-in. aluminum tubing provides resistance to the flow of ambient air to keep the Model 8700 DMP "Tornado" blower at a stable revolution per minute, and to serve as a gross flow control. A variac inside the building serves as an operational vernier flow control. The blower is located at the input end of the system to provide positive pressure in the system. It is located outdoors to keep out the intensive noise it generates and is housed as shown in Photographs 1 and 3 of Figure 3 to protect it from the elements.

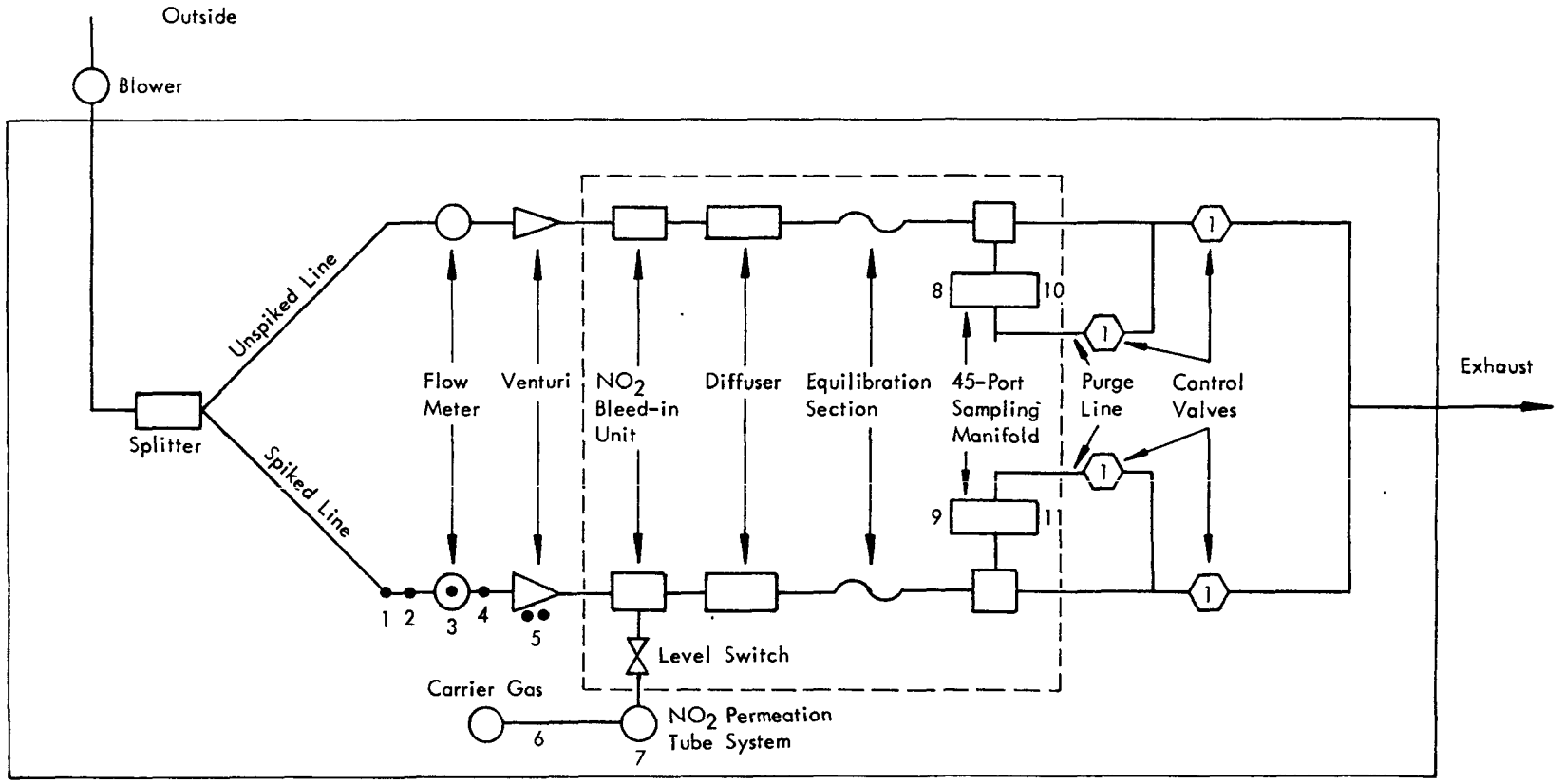

Monitoring Points:

1. Flow Temperature
2. Flow Pressure at Input to Flow Meter
3. Ambient Air Flow
4. Flow Temperature
5. Pressure Drop of Venturi & Temperature of Pressure Transducer
6. Carrier Gas Flow
7. NO_2 Flow Temperature
8. Port Pressure
9. Port Pressure
10. NO_2 & NO
11. NO_2 & NO

Notes:

1. Component within Dashed Area Made of Teflon
2. Piping Out Side Dashed Area made of Aluminum
3. Venturis made of Stainless Steel
4. Spiked & Unspiked Lines Symmetric with Respect to Geometry & Material

Figure 2 - Final Design of the NO_2, Ambient-Air Sampling System

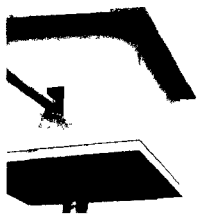

Photo 1 (...) Aluminum tubing ... Valve ... to keep blower at a stable rpm ... joint about 6' meter run

3MP Tornado ... Brewer Electric Company

and 2" Line Going into Building

e Building of Line from Blower

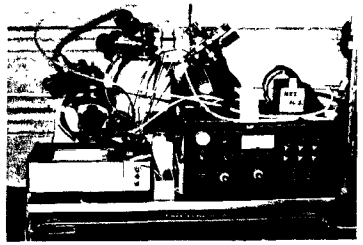

Photo 12 - Bendix Model 8101B NO-NO$_2$-NO$_x$ Analyser used to Monitor Levels of NO and NO$_2$ in Spiked and Nonspiked Lines

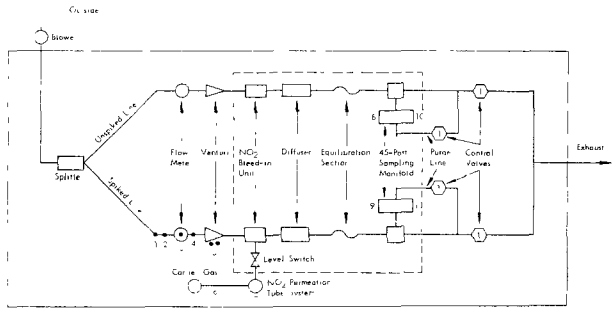

Location Points
1 Flow Temperature
2 Flow Pressure (Input to Flow Meter
3 Ambient Air Flow
4 Flow Temperature Pressure (Input ... ent of Pressure Transducer
5 Carrie Gas Flow
6 NO$_2$ Flow Temperature
8 Port Pressure
9 Port Pressure
10 NO$_2$ & N.C.
11 NO$_2$ & N.C.

Notes
1 Components within Dashed Area Made of Teflon
2 Piping Out Side Dashed Area made of Aluminum
3 Venturis made of Stainless Steel
4 Spiked & Unspiked Lines Symmetric with Respect to Geometry & Material

(A) - General schematic of the Ambient-Air NO$_2$ Sampling ...tem

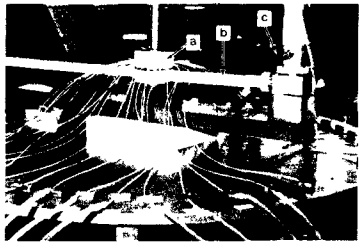

Photo 11 - Sampling Manifold (a) with Bypass Line (b) and Butterfly Control Valve (c) to Exhaust

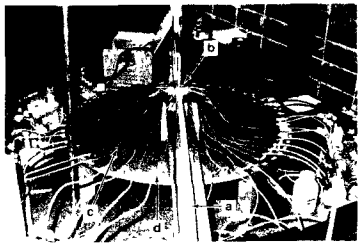

Photo 10 - 1" Teflon Pipe Equilibration Section (a) and Spiked Line Sampling Manifold (b). 1/8" Teflon tubing (c) connects manifold to the sampling ports (d), on circumference of upper table

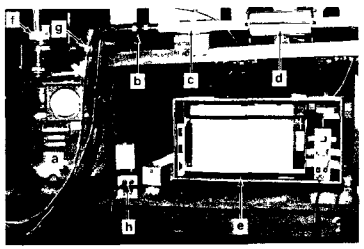

Photo 9 - Front View of Dry Gas Meter (a), Venturi (b), NO$_2$ Bleed-in Unit (c), and Diffuser (d). Recorder (e) is connected to thermocouples (f and g) at inlet and outlet of gas meter with switching unit (h) that alternates readings of the two thermocouples

Photo 5 - 2" Aluminum Tubing Going into Splitter (a) Located on Top the Metal Cabinet--Top Right of Photo

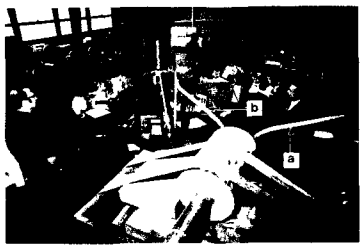

Photo 6 - Splitter with 1" Aluminum Tubing on Outlets to Spiked Line (a) and Unspiked Line (b). Internal baffles in splitter divide incoming airflow into two equal paths

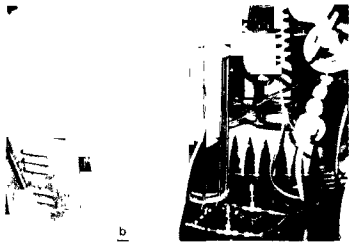

Photo 8c - Frite (a) and Control Valve Manifold (b) on Inlet Side of Permeation Tube ... water ... Filter body is thermometer pocket tube 40mm long with brass end cap ... stainless steel needle valve and ... tube going to rotameters ... capacitance rods are ... connected to wire around one of the thermometer stems and turns ... temperature control unit ... of Photo 8b). Bath temperature exceed ...

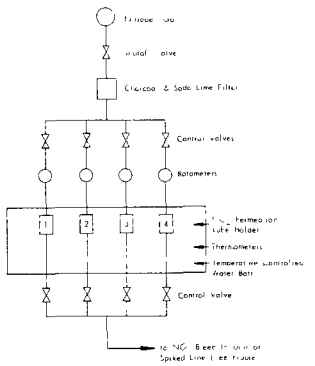

(B) - Block Diagram of NO$_2$ Permeation Tube Assembly. Various combinations of the permeation tube holder are connected to the outlet manifold to provide the different spike levels

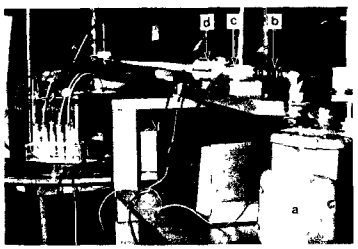

Photo 7 - Dry Gas Meter (a), Singer AL-175 American Meter Company Stainless Steel Venturi (b), NO$_2$ Teflon Bleed-in Point (c), and Teflon Diffuser (d) on Spiked Line

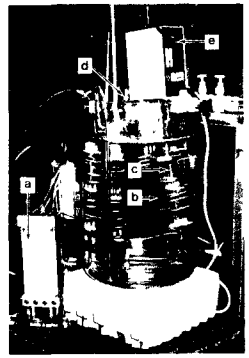

Photo 8b - Permeation Tube Bath Assembly. Tygon tubing from rotameters (a) connect to copper heat exchanger coil (b) wrapped around glass jacket (c) of each permeation tube holder (d). Constant flow carrier gas flows past the permeation tube (held by Teflon spacer disks) and outside neck of top of holders (d). A ASTM 0-30° thermometer sealed into top of holders with thermometer bulb about 4 cm below water level in bath. Temperature control/stirrer unit (e) is Model E52H Fisher Instruments Inc. Saddlebrook, N.J.

Photo 8a - Top View of Temperature-Controlled Water Bath and Permeation Tube Assembly with Teflon Manifold and Control Valves (Top Right) and NO$_2$ Feed Line to Point c of Photo 8?

Figure 3 - Annotated Photographs of the NO$_2$, Ambient-Air Sampling System in Operation

The line from the blower to the splitter is 2-in. diameter, aluminum pipe. It is sufficiently long to serve as a trap for any excess moisture and to bring the ambient air to room temperature. The splitter is also made of aluminum. This splitter, shown in Figure 4, reduces large-scale turbulance from the blower and divides the ambient air stream between the spiked and unspiked 1-in. diameter aluminum lines with a controlled quantity of

$$\text{Flow in } \ell/\text{min} = \frac{\text{method sampling rate (number of samples x number of collaborators + monitor number + purge number)}}{\text{percent flow drawn through sampling manifold}}$$

$$= \frac{0.2\ \ell/\text{min} \times (4 \text{ samples} \times 10 \text{ collaborators} + 1\ NO/NO_2 \text{ monitor} + \text{purge-line flow})}{\text{percent flow drawn through sampling manifold}}$$

$$= \frac{0.2\ (4 \times 10 + 1 + 4)}{0.15} = \frac{9}{0.15} = 60$$

to the venturi, where the air flow in the spiked line is continuously measured and recorded. The monitor number and the purge number are flows attributable to the continuous monitor and the purge line of the system, respectively. The flow on each line--the spiked and the unspiked--is turbulent--Reynolds number > 2,100--with the Reynolds number being

$$R = \frac{Q}{\alpha \nu D} = \frac{Q\ \ell/\text{min} \times 1{,}000\ \text{cm}^3/\ell}{0.785 \times 0.15\ \text{cm}^2/\text{sec} \times D\ \text{sec} \times 60\ \text{sec/min}}$$

$$= \frac{1{,}000\ Q}{7.065\ D} = \frac{1{,}000 \times 60}{7.065 \times 2.1} = 4{,}044 \quad .$$

Since the spiked and unspiked sections are identical except that the spiked section also contains the monitoring points 1, 2, 3, 4, and 5 identified in Figure 3 and the NO_2 permeation tube system, only the spiked section will be discussed.

From the splitter, the spiked line connects to a Singer A1-175 dry-gas meter, which is made by the American Meter Company. (See Photograph 9 of Figure 3.) This flow meter has a pressure drop of 10 mm of water. Thus, only the input gas-flow temperature and pressure are measured to correct the flow readings to obtain the true volume of ambient

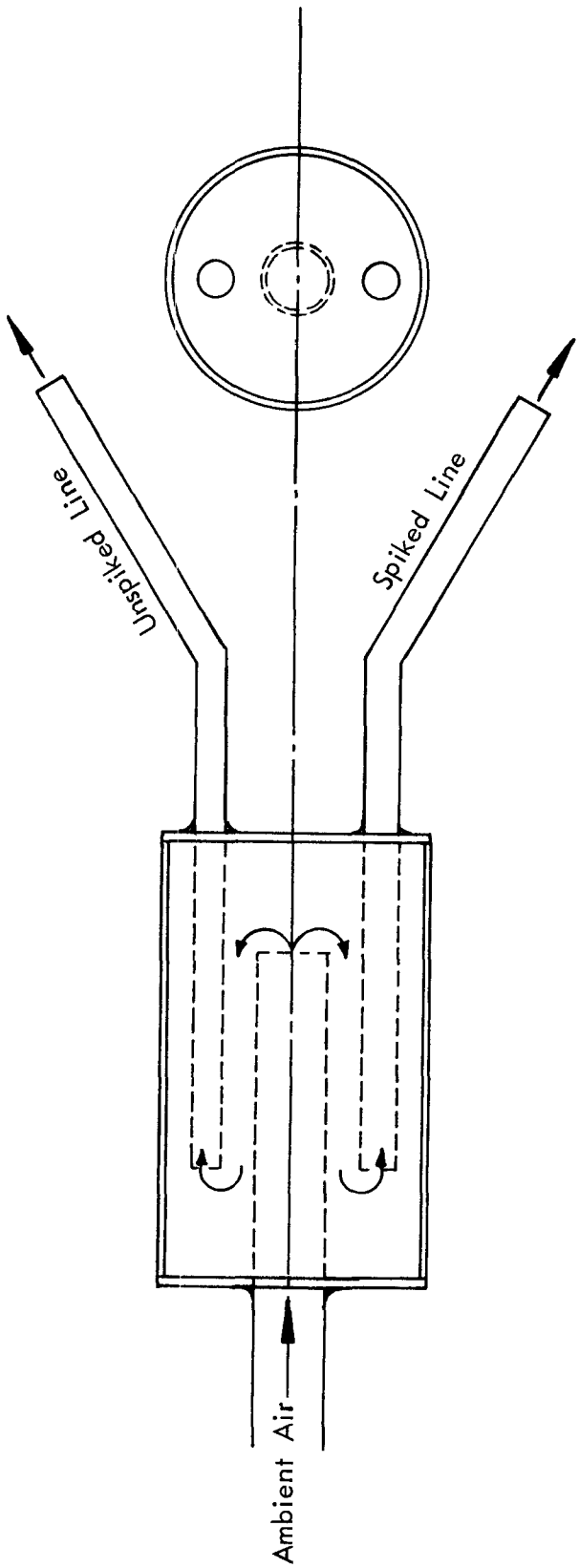

Figure 4 - Ambient Air Stream Splitter

air delivered during a test run. This volume is determined from the flow measured by the meter and the duration of the run, which is measured by an accurate clock.

The output of the flow meter is connected, as shown in Photographs 7 and 9 of Figure 3, to a stainless steel venturi, which was designed for a flow of 60 liters/min. This venturi is used as a general flow control device, and a backup for the gas volume as determined from the gas meter and associated measurements, which are made by a strain gage pressure transducer and thermocouples--see Point 5 of Figure 3(A). Both the pressure drop of the venturi and the temperature of the pressure transducer are recorded on analog recorders. The control of the venturi is handled by monitoring its pressure drop. When the value deviates from a reference value, 60 liters/min flow, the flow can be changed appropriately by making an appropriate adjustment of the variac control in the blower.

The flow temperature measurement (Point 4 of Figure 3(A)) is actually the gas-flow temperature at the output of the gas meter and at the input to the venturi, since those two units are physically close together (about 12.5 cm apart). This temperature measurement can be used in obtaining accurate gas-flow values.

The output of the venturi is a few centimeters from the input of the NO_2 bleed-in unit as shown in Photograph 9 of Figure 3. These two units are connected by 10-in. diameter aluminum tubing. From the input of the NO_2 bleed-in unit through the sampling manifold, the system is made of Teflon.

The NO_2 bleed-in unit, as shown in Figure 3(A) and Photographs 7 and 9 of Figure 3, receives ambient air from the venturi and a level of NO_2 (a spike) from the NO_2 permeation-tube assembly (see Figures A and B, and Photographs 8a-c of Figure 3). Detailed photographs of this bleed-in unit are given in Figure 5. Photograph 1 of Figure 5 is a close-up showing the assembled Teflon unit with its metal holding/mounting plates. The gas stream, or ambient air, enters the opening to the right and passes through the unit, mixing with the spiked level of NO_2 which exits through the tapered smaller tubing shown as concentric to the output of the bleed-in unit at the left of Photograph 1 of Figure 5. The vertical tube of this bleed-in unit accepts the NO_2 gas from the permeation-tube assembly. This spiked gas flows downward through this tube, making a 90-degree turn in its tubing which is inside the unit (as can be seen from Photograph 2 of Figure 5), and after a short run, mixes with the ambient air as stated before.

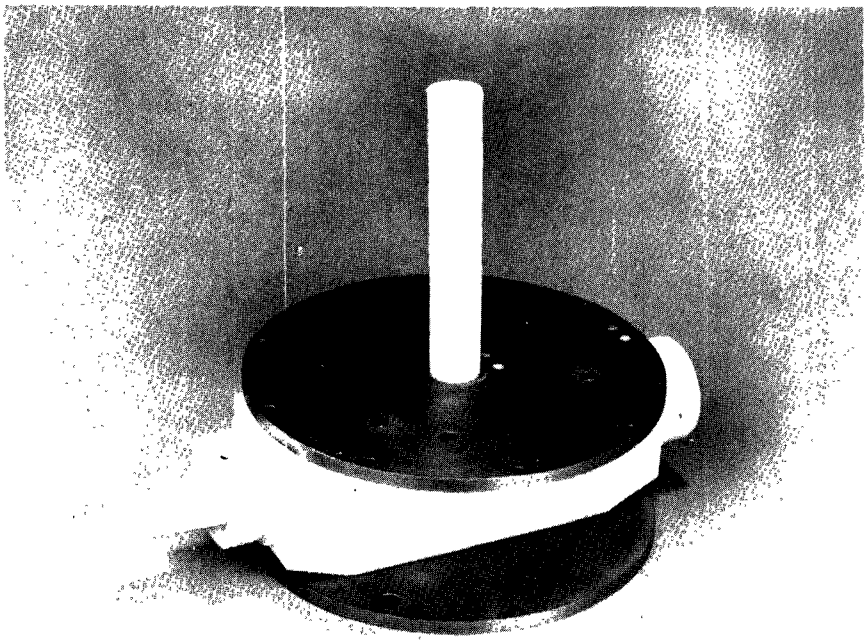

Photo 1 - Detail of NO_2 Bleed-In Unit with Vertical Tube from Permeation Assembly, Chamber with Central Tapered Pickup Tube and Stainless Steel Mounting Components.

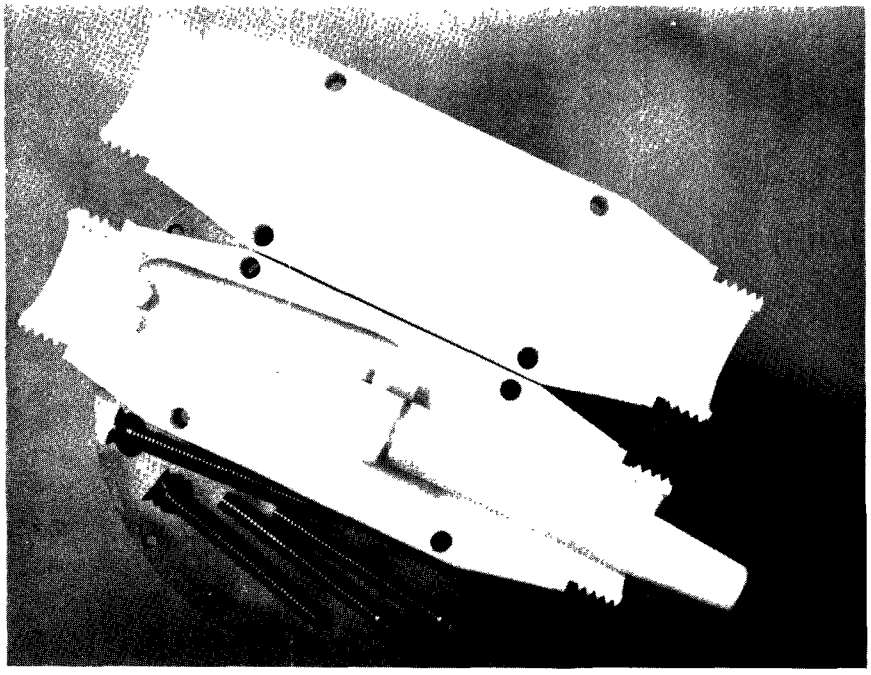

Photo 2 - Close-Up Showing Machined Chamber with Pickup for Bleed-In in Place.

Figure 5 - Photographs of the NO_2 Bleed-In Unit--Assembled and Disassembled

The NO_2 permeation system is shown in Figure 6 and Photographs 8a-c of Figure 3 where details of the system are given in the captions of these photographs. The nitrogen carrier gas is used to flush the NO_2 into the system. It is passed through a charcoal and soda-lime scrubber before it is delivered to the NO_2 permeation tubes. Also, the flow is set by means of control valves and rotameters. This flow is monitored during system operation. The carrier gas is then fed into four separate branches to achieve different levels of NO_2. (More detail on the permeation tubes and their arrangements in the branches is given in Appendix B.) The NO_2 permeation tubes[1/] are arranged in these four different branches to provide approximately 50, 100, 200, and 300 $\mu g/m^3$ flow of NO_2. Branch 1 has four permeation tubes, Branch 2 has five permeation tubes, Branch 3 has two permeation tubes, and Branch 4 has two permeation tubes. An ASTM calibrated thermometer (0.1°C or better accuracy) is an integral part of each permeation tube branch. Each set of permeation tubes is enclosed in a glass tube which has an inlet for the nitrogen carrier gas and an outlet for the nitrogen carrier gas/NO_2 mixture. These NO_2 permeation tube enclosure units are immersed in a temperature-controlled water bath for operation at 25.1°C. If the temperature of this bath were to vary more than 0.2°C, a correction would be made from the following relationship:

$$\text{Log } r = 0.034857\ (273.12 + T) - 10.29198$$

where T = temperature in °C of the permeation tube environment, and
r = the permeation rate.

The ambient air and the NO_2 flow from the bleed-in unit to the diffuser where they are well mixed. The diffuser is a few centimeters downstream from the bleed-in unit, as shown in Photograph 9 of Figure 3. At the diffuser, shown schematically and in the photograph in Figure 7, the gases enter the diffuser through the Teflon tubing (Section A of the schematic drawing of Figure 6), pass into the spiraled tube and through its angled holes into the space outside the tube. The flow continues through the holes in the prescreen block, Item D of the schematic, and then through a series of Teflon screens, Item E.

1/ "Operation Characteristics of NO_2 Permeation Devices," by Harry L. Rook, Ernie E. Hughes of NBS, Washington, D.C., and Robert S. Fuerst and John Margeson of EPA, Research Triangle Park, North Carolina. A paper presented before the Division of Environmental Chemistry, American Chemical Society, Los Angeles, California, 31 March - 5 April 1974.

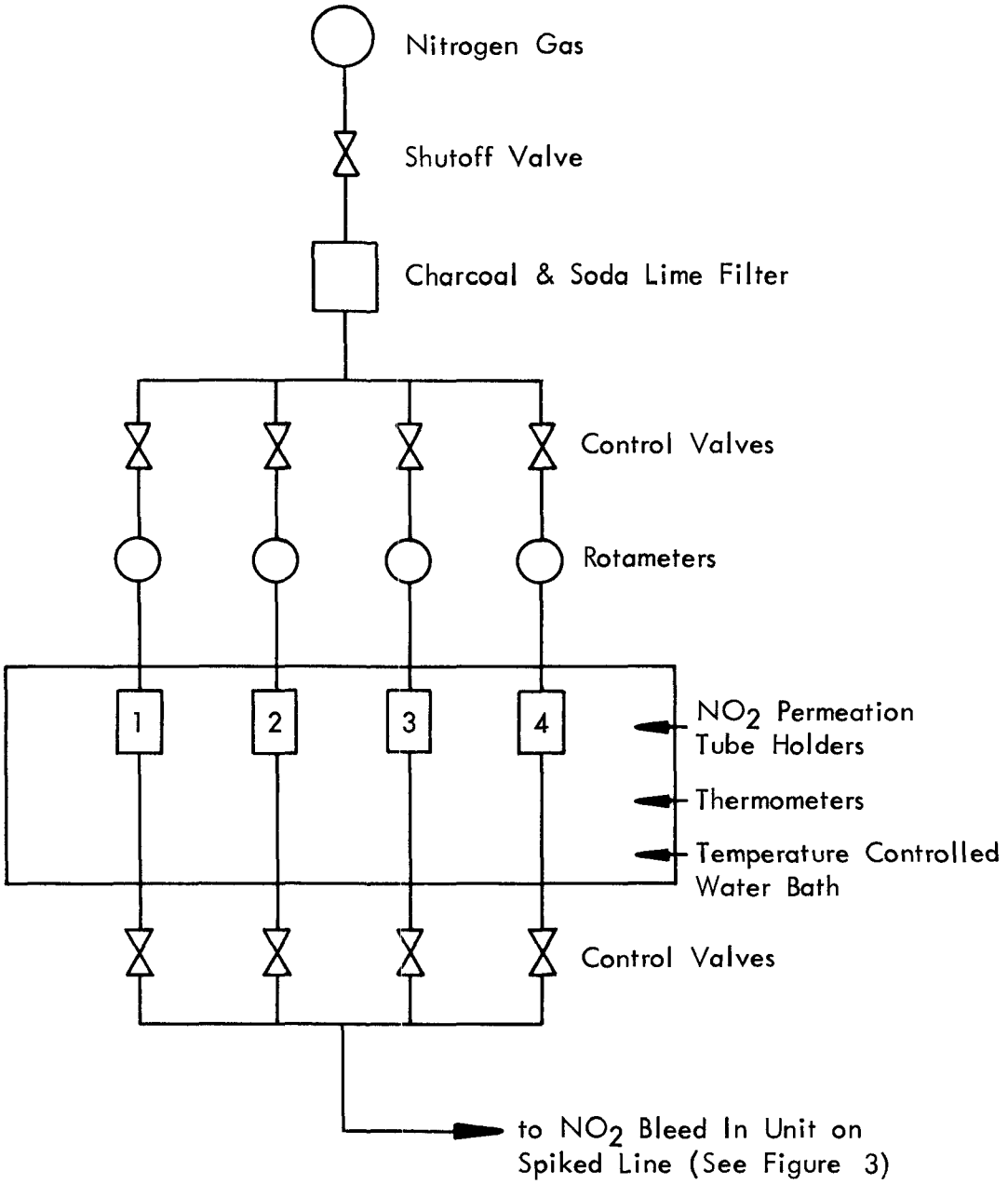

Figure 6 - Schematic Drawing of the NO_2 Permeation Tube Assembly

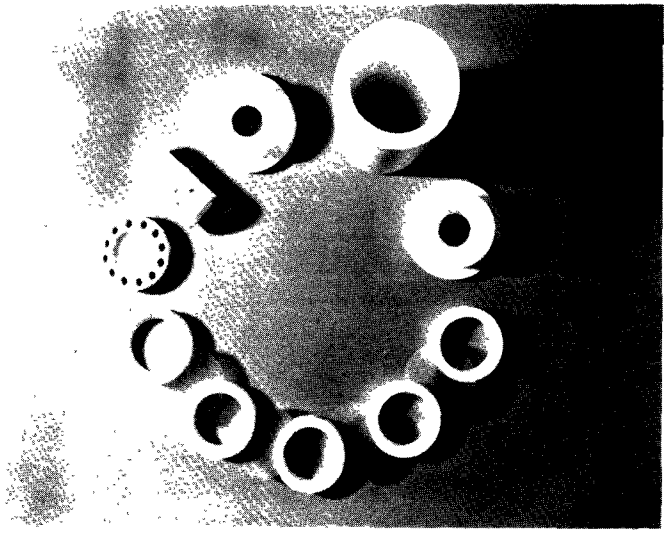

Photo 1 - Top View Diffuser Components: Housing, End Sections, Spiraler Tube, Teflon Screens, Retaining Rings.

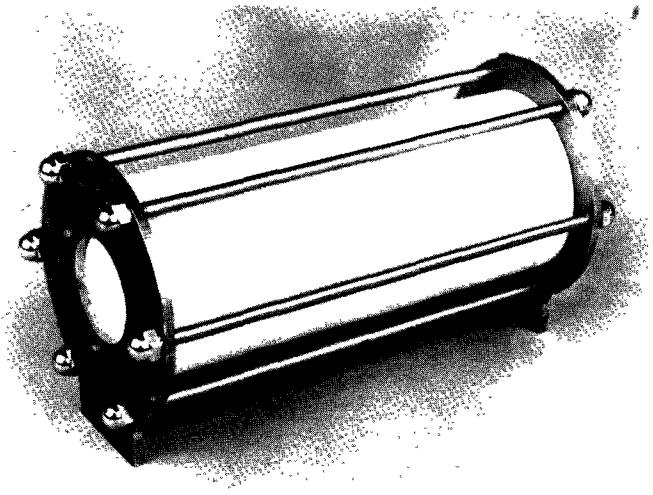

Photo 2 - External View of Diffuser.

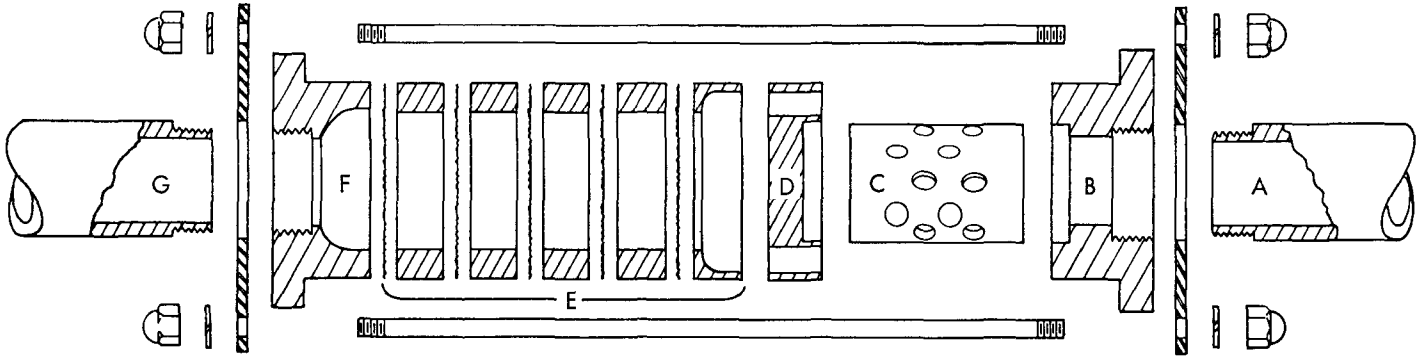

Exploded cross section of all-Teflon diffuser with inlet (A), end section (B), spiraler tube with angled holes (C), prescreen block with holes (D), five sets of fine mesh Teflon screen and retaining blocks (E), end section (F), exit (G) and diffuser housing (H). Double cross-hatched end plates are stainless steel.

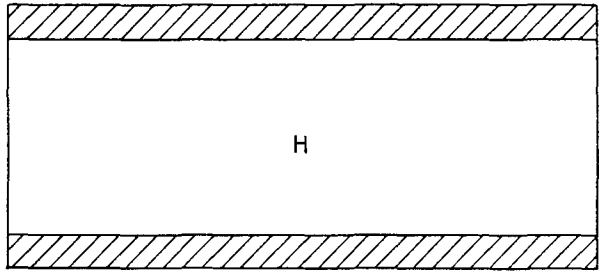

Figure 7 - Schematic Drawing and Photographs of the Diffuser

The homogeneous mixture passes through an equilibration section that is Teflon tubing 1.0 m long. This section of tubing provides the final equilibrated concentration. This tubing is connected to the input of the sampling manifold. (See Photographs 10 and 11 of Figure 3.)

The 45-port sampling manifold is constructed of Teflon except for its metal plates which are entirely external. Photographs 1-3 of Figure 8, which show external and internal views of the sampling manifold and a schematic drawing, describe the operation of the manifold. The stream of the homogeneous mixture of ambient air and a spiked level of NO_2 flows through the bottom portion of the manifold, into the exhaust line. Section A of the manifold is in the pickup tube through which flows the total volume of gas sampled by the collaborators. The inlet to this pickup tube is located such that this volume is drawn from the central portion of the main stream. The sampled volume flows past a mixing impeller (B) and then into the main chamber (C) of the manifold. In this chamber, the flow is spread evenly to the 45 symetrically located exit channels (D). The gas in the main chamber that is not drawn through the exit channels to the collaborator ports flows out the exhaust duct or purge line which has a control valve. Both exhaust lines from the manifold join downstream to form a common exhaust tube, which also contains a flow control valve.

One port of each sampling manifold is used to monitor the pressure in the sampling manifold to determine if it remains positive (see schematic drawing of Figure 3). Another port of each manifold is used to monitor the NO_2 and NO levels being sampled by the collaborators. A Bendix Model 8101 B chemiluminescence $NO-NO_2-NO_x$ analyzer is used for this and is switched between the spiked and unspiked manifolds. (See Photograph 12 of Figure 3.)

D. System Checkout

Readying the system for the collaborative test comprised three principal areas of activity: (1) determination of levels of NO and NO_2, both ambient and inside the building; (2) checkout of the sampling system, including monitoring devices and test instrumentation; and (3) checkout of the sampling system as an operational system. These three areas are discussed below.

1. Ambient levels of NO and NO_2: Ambient levels of nitrogen oxides at the test site were generally low, but there were considerable variations at these levels. Since the test site is located in a rural area south of Kansas City where there is very little industry, the primary factors that influence NO_x levels at the site are wind speed and wind direction.

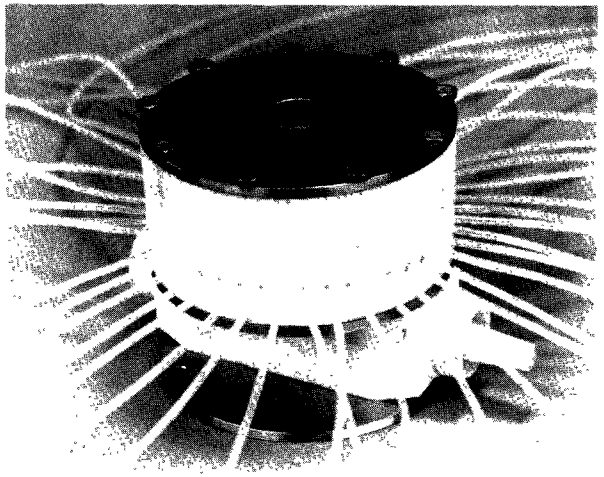

Photo 1 - Sampling Manifold External View.

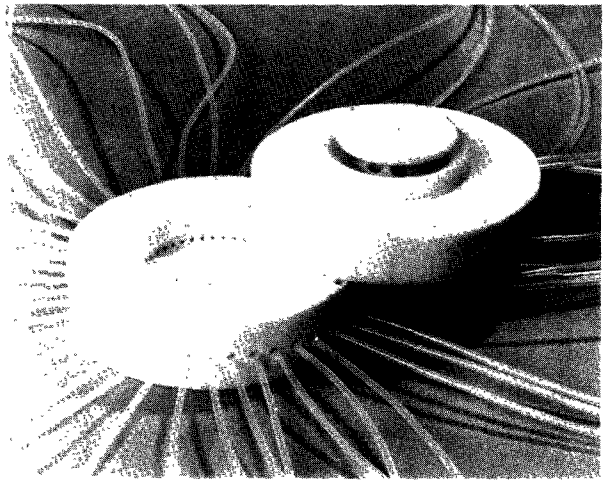

Photo 2 - Internal View (Right Component is Inverted in this Photo).

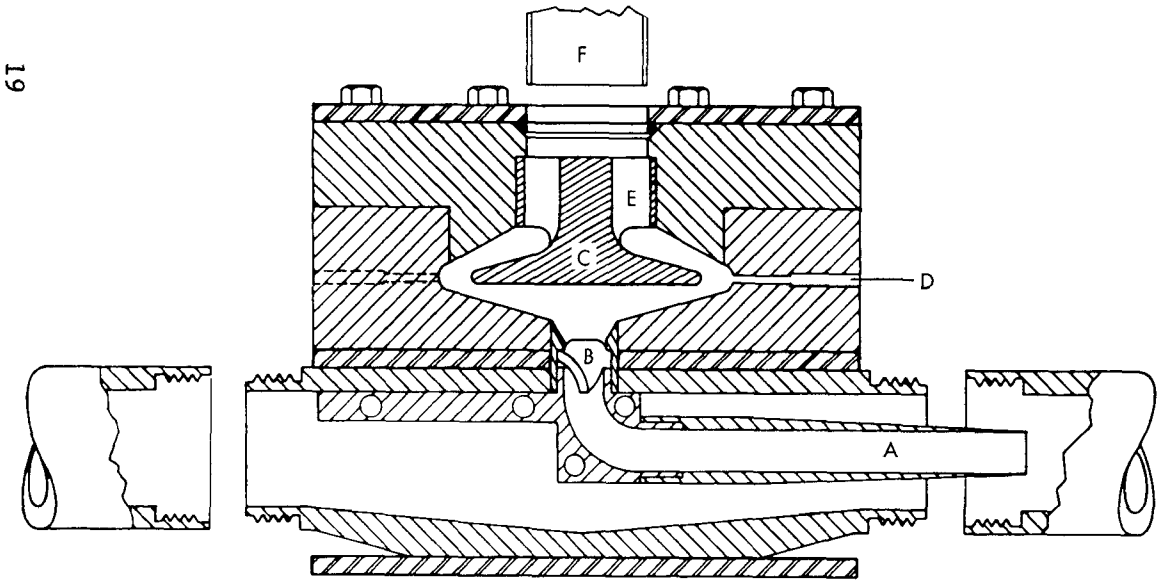

Cross section of all-TFE Teflon manifold with pickup tube (A), mixing impeller (B), main chamber flow spreader (C), exits to collaborator ports (D), channel to exhaust manifold (E), and manifold exhaust duct (F). Gas not captured by pickup assembly exhausts at left side of manifold base. Double cross-hatched assembly plates at top, middle, and bottom are stainless steel.

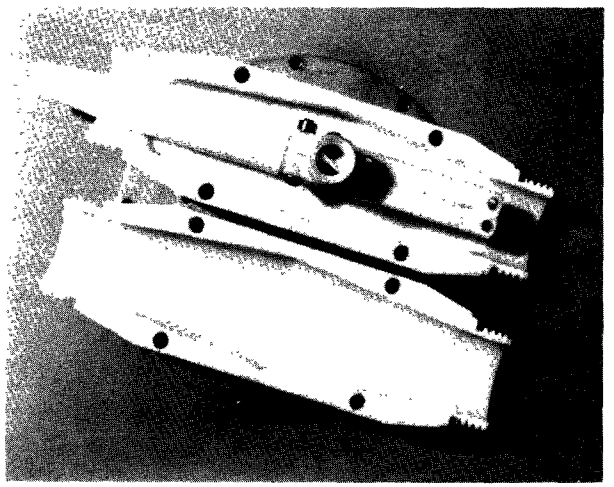

Photo 3 - Internal View of Manifold Pickup Section Showing Flow-Spiraling Impeller.

Figure 8 - Schematic Drawing and Photographs of the Sampling Manifold

During tests of NO_x levels using MRI's Bendix Model 8101 B chemiluminescence $NO-NO_2-NO_x$ analyzer for 24-hr monitoring, the lowest levels were found when the wind was from the south. Both NO and NO_2 seldom exceeded 20 $\mu g/m^3$ when the wind was from the south, and periods of more than 1-hr duration were measured when readings were indistinguishable from the purified zero gas used to calibrate the analyzer.

With northerly winds, NO_2 levels were generally between 30 and 50 $\mu g/m^3$ and NO levels were approximately 10 $\mu g/m^3$. As expected, the ambient levels followed an inverse relation with respect to wind speed. The highest daily readings were coincident with the morning and evening rush hours. These peak levels generally began at about 7:00 AM and again at 5:00 PM and lasted between 2 to 4 hr.

The highest recorded levels of NO_2 occurred under calm wind conditions when the light vehicular traffic in the vicinity of the test station generated levels in excess of 100 $\mu g/m^3$. NO levels did not exceed NO_2 levels at this site.

The ambient background levels at the test site were quite typical. Over a 24-hr period, average NO_2 levels were 10-50 $\mu g/m^3$, and NO levels were of the order 10-20 $\mu g/m^3$. During any 24-hr period, maximum NO_2 levels were generally several times higher than the minimum levels. Indoor readings were similar but did not show the sudden changes often found when monitoring outdoor levels.

2. Subsystems and units: The venturi and dry-gas meter were calibrated using a 1.0-ft^3/rev., wet-test meter, as shown in Figure 9. Refer to Appendix C for further information concerning the calibration method.

The operation of the centrifugal blower was checked by operating it at the normal flowrate for several days. Very little brush wear was found after this period. The only long-term drift found was a slight decrease in flowrate. A compensation for this increase was easily made by adjusting the Variac control.

The thermocouples were calibrated using a null-point potentiometer before and after the collaborative test. Checks of the gas temperature before and after the dry-gas meter revealed no differences in readings so that a single thermometer after the gas meter was used.

Recorders were checked by MRI's electronics shop and these recorders were operated successfully over a period of several days on the sampling system prior to the test.

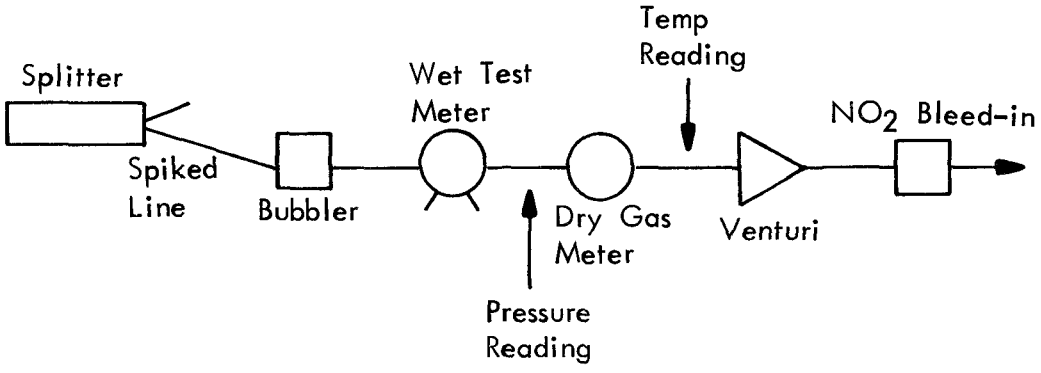

Figure 9 - Venturi and Dry-Gas Meter Calibration System

Flowmeters of the permeation tube assembly that measure the nitrogen flow were calibrated by the manufacturer to 1% accuracy. Thermometers that were used to measure the gas temperature in the permeation tube holders are ASTM type that are accurate to within 0.1°C. The permeation tubes used were calibrated by the National Bureau of Standards and checked by EPA. (See Appendix B.) The entire permeation assembly from the tube holders to the pickup fitting, where the spiked gas enters the main gas stream, was checked for leaks with Snoop and found to be airtight. A check of NO_x levels in the tanks of prepurified nitrogen carrier gas found no NO_2 and 40 $\mu g/m^3$ NO. The entire system was checked by running it continuously for several days. Water addition to the constant temperature bath was the only maintenance required. The temperature variation of the permeation tube bath during this time was less than 0.1°C.

The Bendix NO_x Analyzer was checked at MRI by a Bendix field representative. The difference in spiked and unspiked readings agreed within 10% of the calculated spike levels at all levels. The instrument was stable and reliable when operated continuously at the levels found during normal testing. Checks with calibration gases reveal that the catalytic convertor efficiency does fall off sharply above 400 $\mu g/m^3$.

The symmetry of the sampling ports was checked in two ways. The primary way was that the pressure drop at each port was measured under the normal load of 200 cc/min. This test showed that all ports gave a pressure drop of 1.5 cm of water ± 0.5 cm. Such a pressure drop may be considered to be insignificant and should have no effect on sample flows from the ports.

A second way was to connect the NO_2 monitor to ports of the spiked and unspiked sampling manifolds and measure the level of NO_2 in micrograms per cubic meter. This was done in two ways: the system under a load, e.g., a spiked level of approximately 350 $\mu g/m^3$; and an unloaded condition where just ambient air was passed through each section--spiked and unspiked--of the NO_2 sampling system. In both cases, the NO_2 monitor showed no variation between ports when connected to four ports spaced equally about the manifold.

3. System operation: Identical materials and dimensions are used on the spiked and unspiked sections of the NO_2 sampling system. Handling and treatment of all components was also identical.

Flowrates of the spiked and unspiked sides were within 10% of each other with all dampers open. In normal operation, the exhaust dampers are adjusted to give a positive pressure of 2-4 mm of water at the sample manifolds. Once set, this pressure is stable.

The rise and fall times to equilibrium in response to changes in a spike level were checked. Rise time was less than 15 min and fall time was less than 5 min (when permeation tubes were disconnected). The fall time is essentially that of the analyzer response time, allowing for the purge time of the sample lines. The rise time is longer than the fall time because of the increased pressure that the carrier gas stream must work against when a set of permeation tubes are connected. Some flow reversal in the permeation tube holders occurs after connection.

Since the response times were essentially limited by flowrates and instrument response, no observable adsorption effects were noted. Checks of NO_x levels found at the sampling ports agreed, within normal accuracy limits, with those measured outside the building. At the 50-$\mu g/m^3$ level both readings were within 5 $\mu g/m^3$ (0.5% of full scale) which is within the accuracy of the monitoring instrument. Thus, the unspiked samples at the sample ports accurately reflect ambient levels, and the sampling system may be considered to be inert with respect to NO_2.

III. TEST SITE

The general criteria one would use in selecting a site include the ambient level of NO_2 and variation thereof, general meteorological and climatological conditions, work facilities for the collaborators (adequate space, facilities, housing, etc.), cooperation of the organization furnishing the site, logistic aspects, and local lodging accommodations.

The levels of NO_2 required are those representative of ambient NO_2 conditions, which are in the range of a few micrograms per cubic meter to 300 $\mu g/m^3$. These levels could be achieved at one site with a low level of NO_2 by spiking the ambient air with various levels of NO_2 in a manifold sampling system (see Section II, Part A).

MRI's field station (see Figure 10), which is located in a rural area south of Kansas City, meets all the criteria and was selected as the test site. The NO_2, ambient-air sampling station is housed in Building 3 shown in Figure 10. The input to the sampling system is located outside the building near the roadway (see Photograph 3 of Figure 3).

The test facilities are described in conjunction with the sampling system in Section II, Part C. Photographs of the facilities are given in Figure 11. Photograph 1 shows the circular tables that house the sampling manifolds and the collaborators' sampling trains. Each table--spiked and unspiked--has a multiplicity of AC power receptacles, with each collaborator

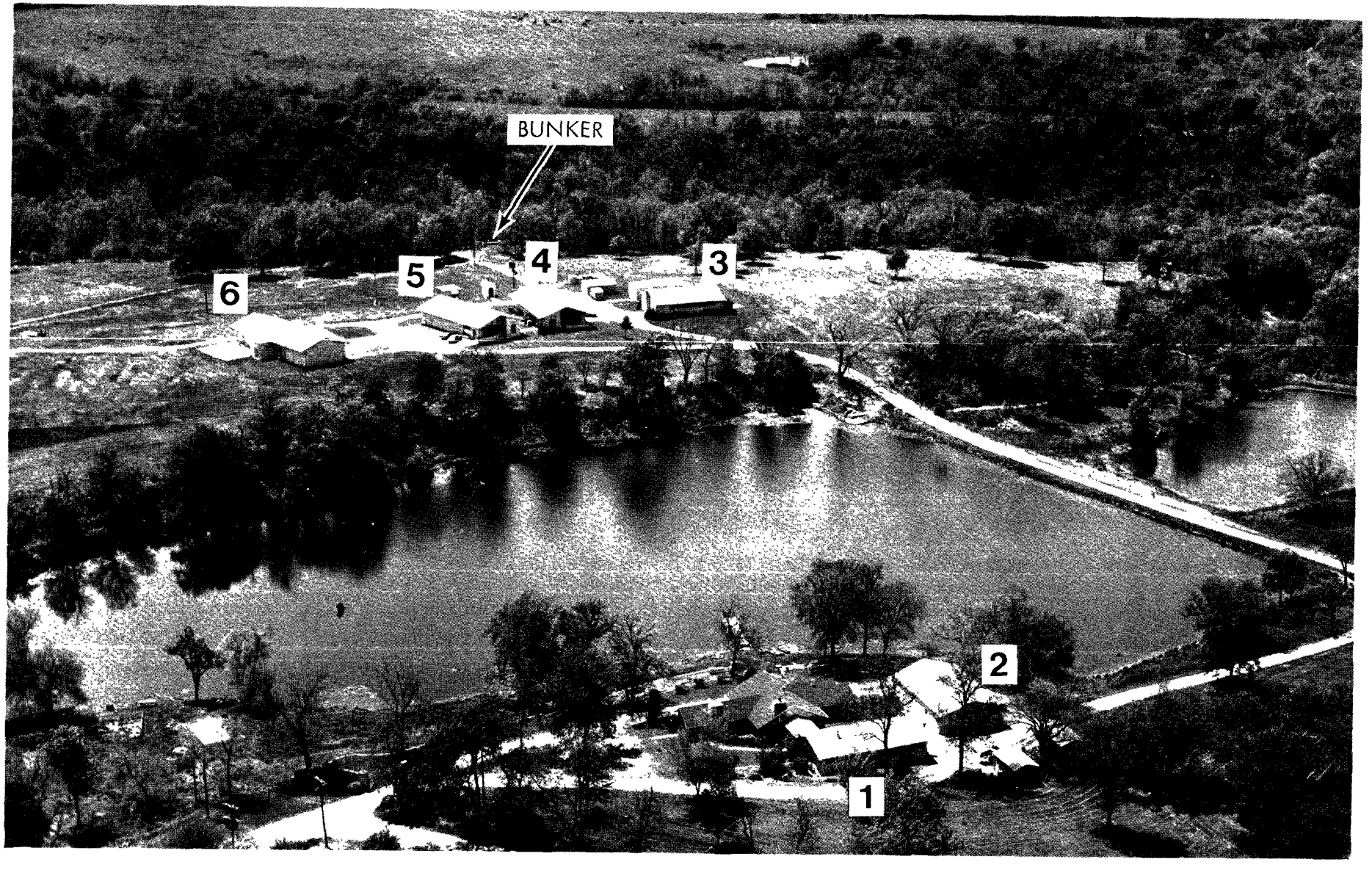

DERAMUS FIELD STATION

Figure 10 - Collaborative Test Site: MRI's Field Station

having its own branch of outlets. Each branch has its own circuit breaker and branch indicator (see Photograph 2 of Figure 11). This arrangement is to protect one collaborator from another in case one collaborator may have a power failure due to faulty equipment.

Photograph 3 of Figure 11 gives a close-up view of some of the collaborators' trains positioned in their table areas (see Figure 11). Photograph 4 of Figure 11 gives a view of part of the bulletin board where test instructions and general information was posted.

Photographs 1, 2, and 3 of Figure 11 show that the windows on the north side of the building were boarded to keep electromagnetic radiation from entering the building. With this blockage and a temperature control system in the building, the 25.1°C permeation bath was able to be maintained at that temperature throughout the four 24-hr runs with no detectable deviation from the 25.1°C temperature, except for a few hours when the deviation was 0.1°C.

IV. SELECTION OF COLLABORATORS

A principal activity was to compile a list of potential collaborators and from this list select 10 to perform the testing according to the tentative sodium-arsenite method. Information was obtained from EPA (names and addresses of 150 organizations) and from MRI's files to compile a list of nearly 200 potential collaborators.

A letter was sent to 162 organizations seeking their desire to participate as a volunteer collaborator on this test-and-evaluation program. Attachments to this letter were (1) a "Collaborator Form" to be completed which surveyed their experience with the four methods, methods they had used, equipment they could make available for the tests, acceptable length of test period, etc., and (2) a copy of the method writeup for the first collaborative test--the sodium-arsenite method. A copy of this letter and the collaborator form are given in Appendix D.

A majority of the responses indicated the desire that a test period for a method be no more than 6 days.

Ten organizations were selected for the sodium-arsenite collaborative test from the 39 organizations that responded in the affirmative to participate in the test. The selection was based upon the following criteria:

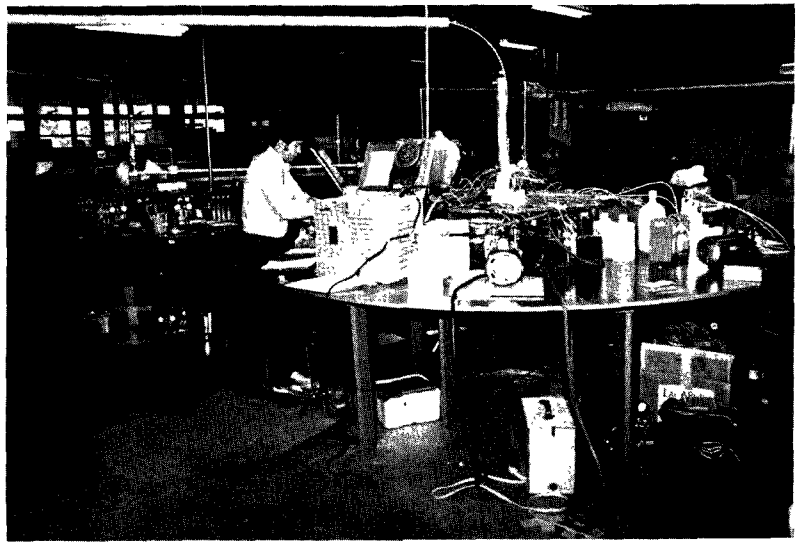

Photo 1 - Unspiked Table in the Forefront; Spiked Table in the Rear.

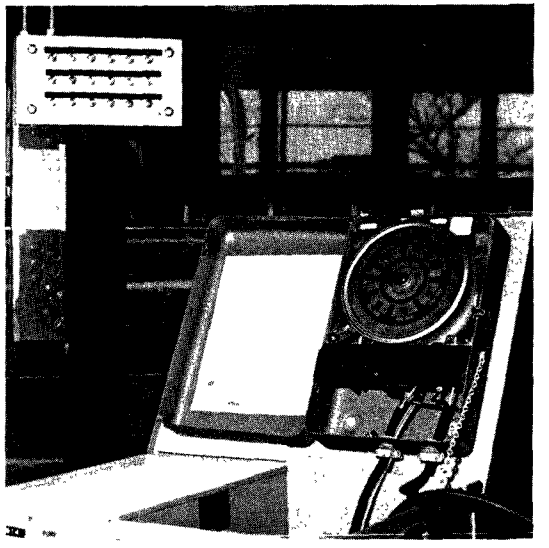

Photo 2 - AC Power Control and Visual Indicator; the Boarded Windows to Keep Out EM Radiation.

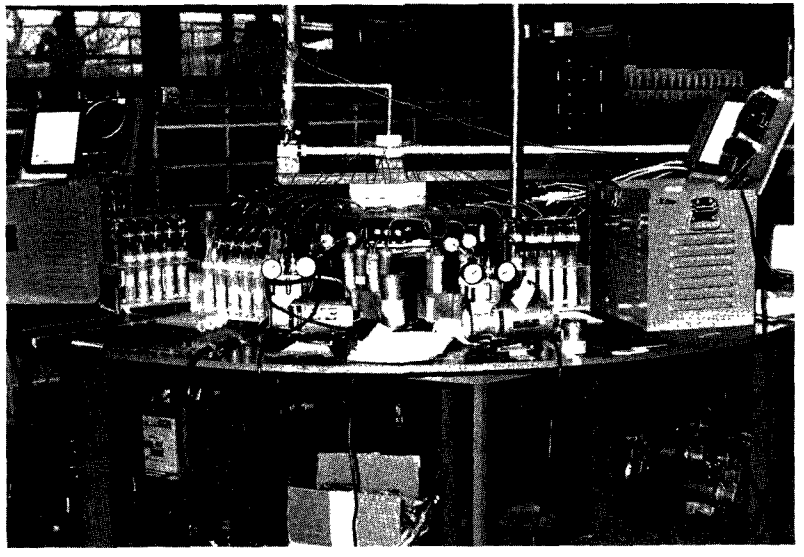

Photo 3 - Collaborators' Sampling Trains on Spiked Table; Spiked Sampling Manifold on Shelf above Table.

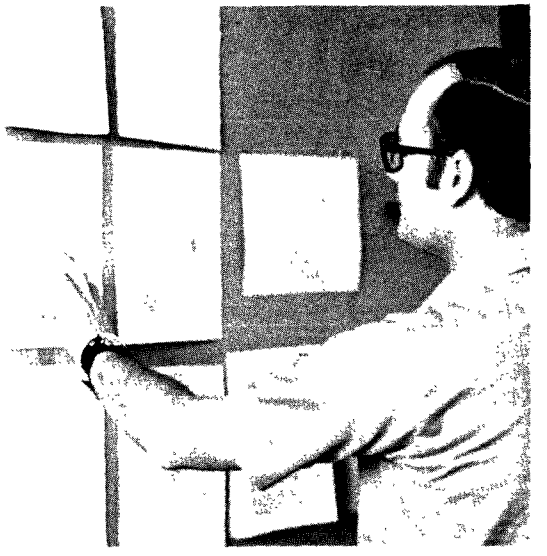

Photo 4 - Collaborators' Bulletin Board with Test Requirements, Gereral Information, etc.

Figure 11 - Photographs of the Test Facility

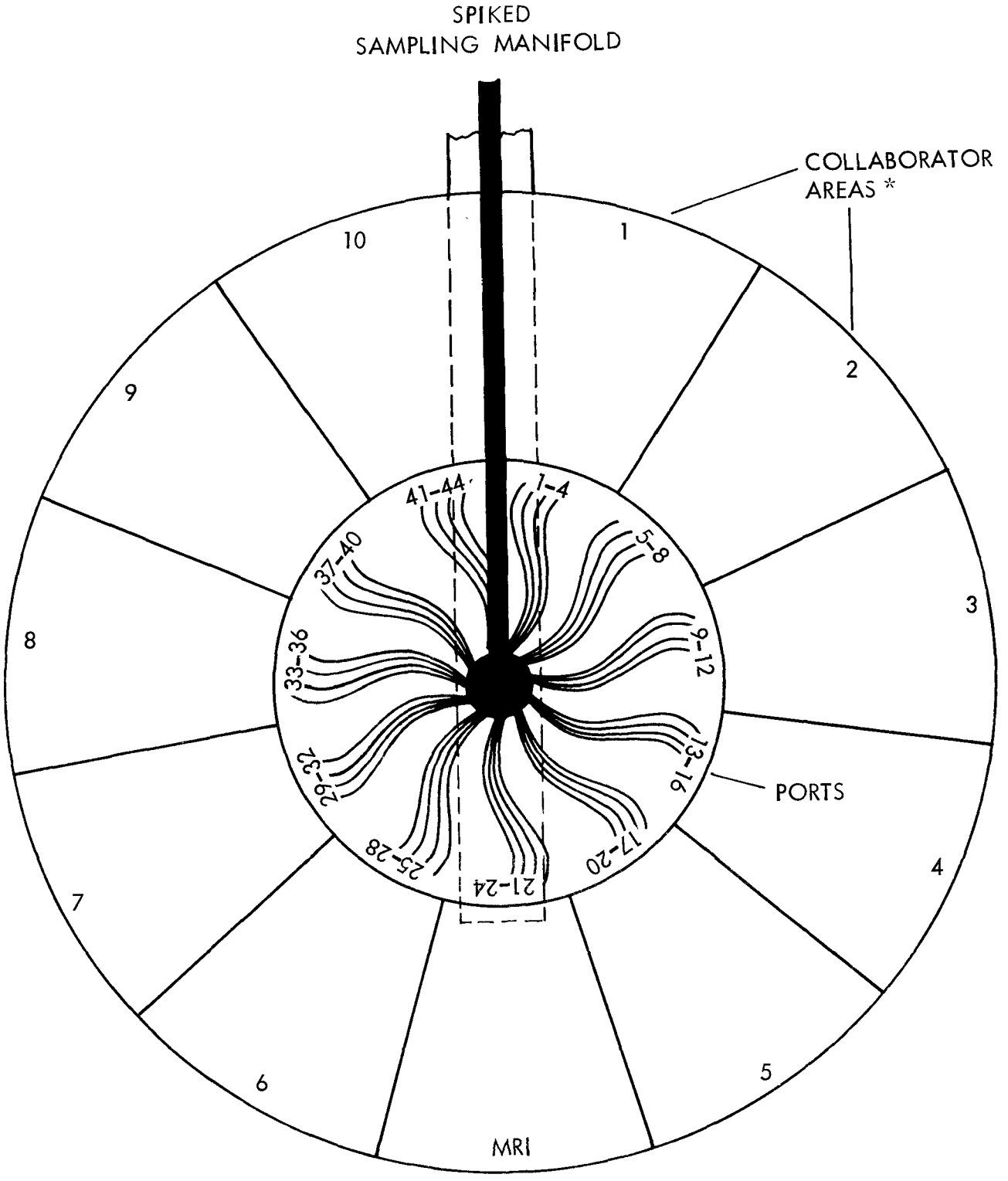

* For Unspiked Manifold--Colaborator areas marked in reverse order--counter clockwise.

Figure 12 - Collaborators' Sampling Areas at the Test Site

1. Willingness to participate on a volunteer basis,

2. Technical capabilities,

3. Related past experience,

4. Availability,

5. Ability to furnish sampling equipment, instruments, and materials required to perform the test strictly according to the method, and

6. Type of organization (industrial, educational, governmental--local, state, federal--etc.).

The information needed to make the selection based on the above criteria was obtained from the collaborator forms that were returned, and from subsequent telephone conversations with the candidate collaborators.

The 10 organizations selected as collaborators for the sodium-arsenite collaborative test were:

TEXAS AIR CONTROL BOARD
8520 Shoal Creek Boulevard
Austin, Texas 78758
512-451-5711
(Jimmie S. Payne, Mr. Fernando Martinez[1,2/])

NATIONAL BUREAU OF STANDARDS
Chemistry Building
Washington, D.C. 20234
301-921-2886
(Dr. John K. Taylor, Mr. Bob Deardorff[1,2/])

Air and Industrial Hygiene Laboratory
CALIFORNIA DEPARTMENT OF HEALTH
2151 Berkeley Way
Berkeley, California 94704
415-843-7900
(Mr. Emil R. de Vera, Mr. Kenneth Smith[1,2/])

CITY OF PHILADELPHIA
Air Management Services Laboratory
1501 East Lycoming Street
Philadelphia, Pennsylvania 19124
215-288-5177
(Mr. Donald Kutys[1,2/])

MECKLENBURG COUNTY HEALTH DEPARTMENT
1200 Blythe Boulevard
Charlotte, North Carolina 28203
704-374-2607
(Mr. James T. Ward[1,2/])

KENTUCKY DIVISION OF AIR POLLUTION
311 East Main Street
Frankfort, Kentucky 40601
502-564-4446
(Ms. Diana Dunker[1,2/])

1/ These individuals performed the sampling at the field site.
2/ These individuals performed the analyses of the samples.

KENNECOTT COPPER CORPORATION
Post Office Box 11299
Salt Lake City, Utah 84111
801-322-1533
(Dr. Robert J. Heaney, Mr. Lynn Hutchinson[1,2/])

KANSAS CITY AIR POLLUTION CONTROL LABORATORY
2 Northeast 32nd Street
Kansas City, Missouri 64116
816-274-1206
(Mr. Glenn Smith[1,2/])

LOS ANGELES COUNTY AIR POLLUTION CONTROL DISTRICT
434 South San Pedro Street
Los Angeles, California 90013
213-974-7573
(Mr. Abe B. Moore,[1/] Ms. Violeta Vita[2/])

INSTITUTE OF GAS TECHNOLOGY
3424 South State Street
Chicago, Illinois 60616
312-225-9600
(Mr. Robert A. Macriss, Mr. Jon Zimmer,[1/] Ms. Eugenia Mann[2/])

These organizations will be referred to as Collaborators A through J, without defining which is A, B, etc., to allow the organizational data to remain anonymous.

V. STATISTICAL DESIGN

A. General Considerations and Comments

The purpose of this collaborative test was to determine the precision and bias of the sodium-arsenite method. A major element of the collaborative test was to have an experimental design that would allow this purpose to be met. Considerations that formed the bases of this design, which is given later in this section in a formal manner, are:

1. Challenge (spike) levels of NO_2,
2. Ambient levels of NO_2,
3. True values of NO_2,
4. Sampling time of a run,
5. Test period of the method,
6. Number of collaborators,
7. Number of samples per run,
8. Interferences,
9. Adsorptivity,
10. Sampling ports, and
11. Instrumentation.

1/ These individuals performed the sampling at the field site.
2/ These individuals performed the analyses of the samples.

Challenge level of NO_2 is an experimental design variate. The following four levels of challenge were selected based upon the normal range of values found in ambient air on a 24-hr average basis: one low level in the order of 50 $\mu g/m^3$; two medium levels, one near 100 $\mu g/m^3$ and the second near 200 $\mu g/m^3$; and one high level of approximately 300 $\mu g/m^3$. A challenge level should be steady state, or continuous at a specific level, plus or minus acceptable deviations--less than ± 2%. The source of NO_2 was permeation tubes constructed and calibrated by the National Bureau of Standards. (See Appendix B.)

Ambient levels should be representative, preferably less than 10 $\mu g/m^3$. Since the ambient levels are the actual ambient levels of NO_2 at the test site, those levels present during the time of testing may vary some from this criteria (see Section II, Part D). The ambient levels will be mixed with the challenge levels to provide the spiked challenges. There will be just ambient challenges which are identical with the ambient portion of the spiked challenges. The collaborators will sample both spiked and ambient challenges simultaneously.

For a run, the true value of NO_2 sampled by the collaborators will be taken as the NO_2 spiked level generated by the permeation tube assembly plus the average value of the ambient challenges sampled by the 10 collaborators.

The sodium-arsenite method requires a sampling period to be 24 hr.

From the survey for volunteer collaborators, it was determined that 6 days would be the limit for a test period of a method. Thus considering this period, the mandatory 24-hr sampling period (or a run), travel time, and orientation, set-up and switch-over time (time in between runs), four runs would be the maximum possible.

Ten collaborators were deemed a sufficient number to obtain a cross-section of the population of the type organizations that would be involved in sampling NO_2, be within acceptable project costs, and provide statistical significance with the results.

Replicate samples are desirable and generally needed. In this test, replication is constrained by the test period and the duration of a run, and thus any replicates must be of the nature of simultaneous sampling by collaborators using as near identical trains as possible. This type replication, in turn, has constraints, which include principally the number of collaborators, space limitations at the test site, size of the NO_2 sampling system and cost limitations. Naturally some of these are interdependent.

An important consideration for the sodium-arsenite method is that of interferences, such as NO and ratios such as NO_2/NO and NO_2/O_3. These factors will vary depending upon geographic location, time of year, etc. The interference consideration was not included in the experimental design, since EPA told MRI that it had been covered by EPA's work.

Adsorptivity is of concern because of the possibility of error in the NO_2 level received by the collaborators' sampling devices in contrast to the known level of the challenge--from both the standpoints of increasing and decreasing the challenge level from run to run. Teflon material was used from the NO_2 bleed-in port through the sampling manifold to minimize if not eliminate the adsorptivity factor. For further assurance, prior to commencing a run, the challenge could be run for a sufficiently long period so that all surfaces exposed would have adsorbed their limit or lost their limit of deadsorbance. Both aspects were covered; Teflon was used in the construction and sufficiently long challenges were made to the system prior to commencing a run.

The port-to-port effect did not need to be incorporated in the experimental design because results of the evaluation of the NO_2, ambient-air sampling system indicated that all ports were identical (see Section II, Part D).

The major considerations with regard to instrumentation for the sodium-arsenite collaborative test were: (1) MRI would only instruct the collaborators that they were to use the sampling equipment and calibration equipment specified in the method writeup, and (2) MRI's monitoring instrumentation and test instrumentation used in the calculation of the NO_2, ambient-air system was sufficiently reliable and accurate. In both cases, all requirements were met.

To minimize bias, which was of keen concern, the collaborators would need to prepare absorbing reagent, etc., at their home laboratories. The only purpose of going to the field site would be to collect samples. Then the samples taken in the field would be returned to the collaborators' home laboratories to be analyzed to eliminate any bias from the chemical analysis phase of the collaborative test.

B. The Formal Design

The NO_2 data are collected according to a two-way analysis of variance model with the analysis of primary interest being estimation of the components of variance and the bias. Thus, the mean square errors can be constructed.

Specifically, we have:

$$X_{ijk} = \mu + C_i + L_j + CL_{ij} + e_{k(ij)}$$

where
μ = overall mean,
C_i = i^{th} collaborator ($i = 1,\ldots, 10$; C_i is a random factor),
L_j = j^{th} level of NO_2 ($j = 1,\ldots, 4$; L_j is a fixed factor),
CL_{ij} = collaborator-level interaction,
$e_{k(ij)}$ = error term ($k = 1,\ldots, 4\ \forall\ ij$),
X_{ijk} = k^{th} response observed by i^{th} collaborator on j^{th} level.

The expected mean squares are:

$$E\ (MS_C) = \sigma_L^2 + 16\ \sigma_C^2,\ E\ (MS_L) = \sigma_e^2 + 4\ \sigma_{CL}^2 + 40\ \sigma_L^2,\ E\ (MS_{CL}) = \sigma_e^2 + 4\ \sigma_{CL}^2$$

and

$$E\ (MS_e) = \sigma_e^2\ .$$

Although the F-tests for significant effects were performed for completeness, the primary object is the components of variance analysis; in particular, the components σ_e^2 (variance of repeated observations) and σ_c^2 (variance between collaborator means).

Let

N_{js} = spiked level j of NO_2,
N_{ijk} = k^{th} observation by i^{th} collaborator at level j of NO_2,
$\bar{A}_{\cdot j}$ = average of (all) collaborators' ambient observations at level j,

then

$$X_{ijk} = ijk^{th}\ \text{response} = (N_{ijk} - \bar{A}_{\cdot j}) - N_{js}.$$

Therefore, X_{ijk} is the ijk^{th} deviation from the true (bias) subject only to the error in using $\bar{A}_{\cdot j}$ as the true ambient level. It would, of course, be desirable to have no error at all in the true value, but the above method of estimating bias is preferable to no estimate at all. Thus, we produced mean square error (per collaborator, if necessary) estimates in addition to variance estimates.

In any analysis of variance the homeoscedastic assumption must be validated. It was found that the measurement error was not uniform throughout the experiment but also not proportional to the level of NO_2. Therefore, no data transformation was made.

Outliers were deleted before analysis, and the frequency of them noted. Due to computational errors, two of the 10 collaborators contributed unduly to the bias. Therefore, the data were analyzed with and without their presence.

VI. COLLABORATORS' FIELD SAMPLING

The collaborative test took place at the MRI Deramus Field Station (see Figures 3, 10, and 11) during 4-8 February 1974.[1/] The 10 collaborators named on pages 29 and 30 started the test at 0830, 4 February, with an orientation (see Figure 13). The NO_2, ambient-air sampling system they used was shown and explained to them. The written instructions that comprise Appendix E were given to and discussed with the collaborators. After this orientation period the collaborators set up their sampling trains in preparation for the first run (see Figures 13 and 14). They were ready to start sampling at 11:50 AM, 2 hr ahead of schedule. The actual schedule of the four runs that took place is given in Table I. All 10 collaborators cleared the site by 1500, Friday afternoon, 8 February. There were no system operational problems or collaborator operational problems.

Each run was 24 hr in duration. The collaborators were at the site from 2 to 3 hr prior to the start of a run, or completion of a run. They stayed through the changeover to the subsequent run and from 1 to 2 hr thereafter.

From only observations and no communications controls, MRI ascertained that all collaborators followed the sampling procedures given in the method writeup, with only minor deviations. Figures 14 and 15 give photographs of collaborators preparing their equipment for a test, some of the sampling train setups, and these trains in operation.

Field data were recorded in duplicate by the collaborators on data sheets designed by MRI for this test (see Figure 16). A copy of this data sheet was collected from each collaborator after the completion of a run, and before a subsequent run would be started. The collaborators retained their copies for recording subsequent analysis work at their home laboratories.

1/ The sodium-arsenite test was first scheduled for the first part of January 1974. A change in the schedule for the development of the NO_2, ambient-air sampling system necessitated rescheduling the test.

Front Row: Diana Dunker, Bob Deardorff, Fernando Martinez, Abe Moore, Paul Constant 1/, James Ward

Back Row: Jon Zimmer, Lynn Hutchinson, Glenn Smith, Donald Kutys, John Margeson 2/, George Scheil 1/, John LaShelle 1/, Kenneth Smith

---

1/ MRI personnel.
2/ EPA Project Monitor.

Figure 13 - Photograph of Field Personnel of the NO_2 Collaborative Test (Sodium-Arsenite Method); MRI Field Station; 4-8 February 1974

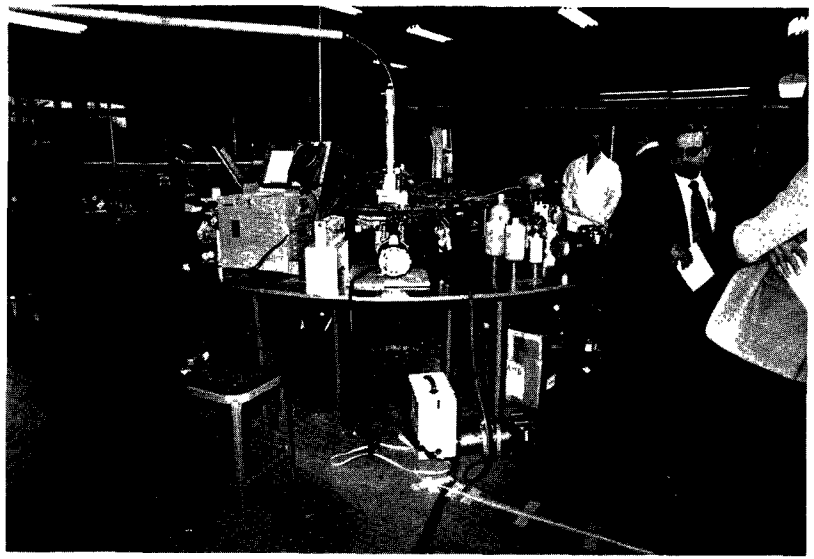

Photo 1 - Unspiked sampling station in foreground; spiked station at top rear.

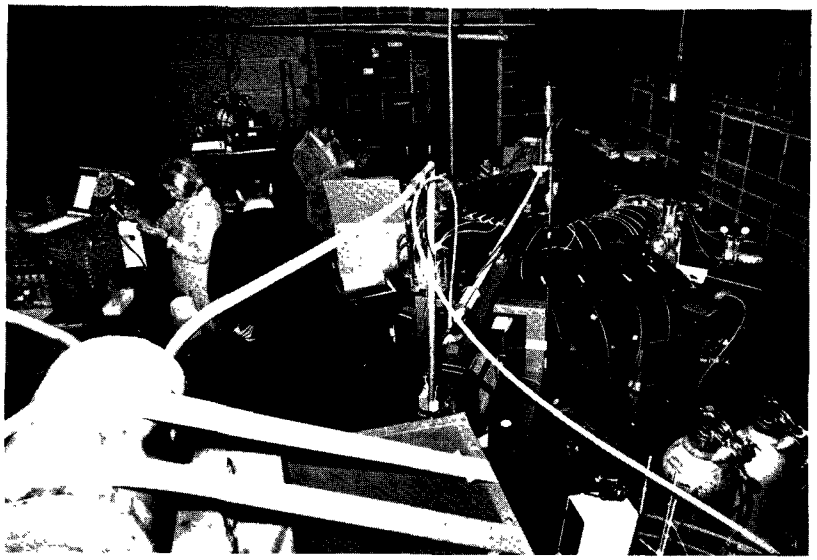

Photo 2 - *Spiked sampling station at right; unspiked station at left center.*

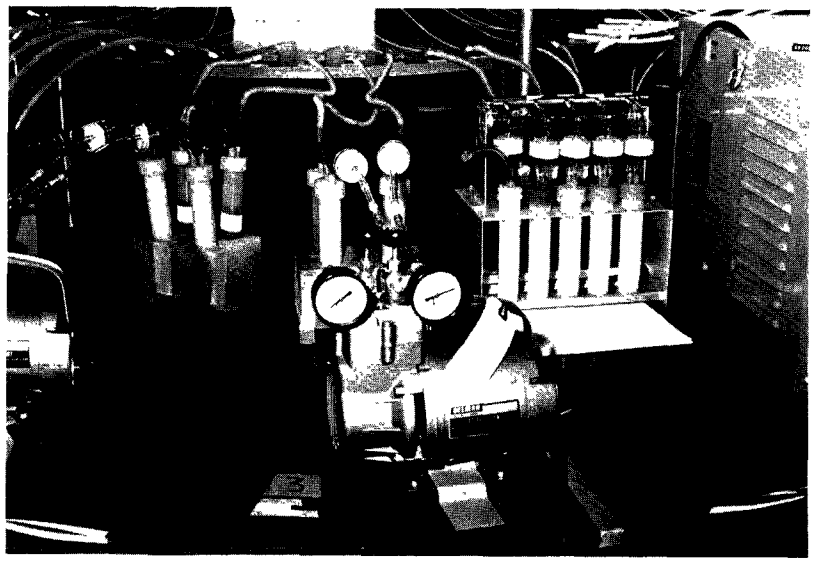

Photo 3 - Typical trains on the spiked line where a collaborator pulls four samples simultaneously.

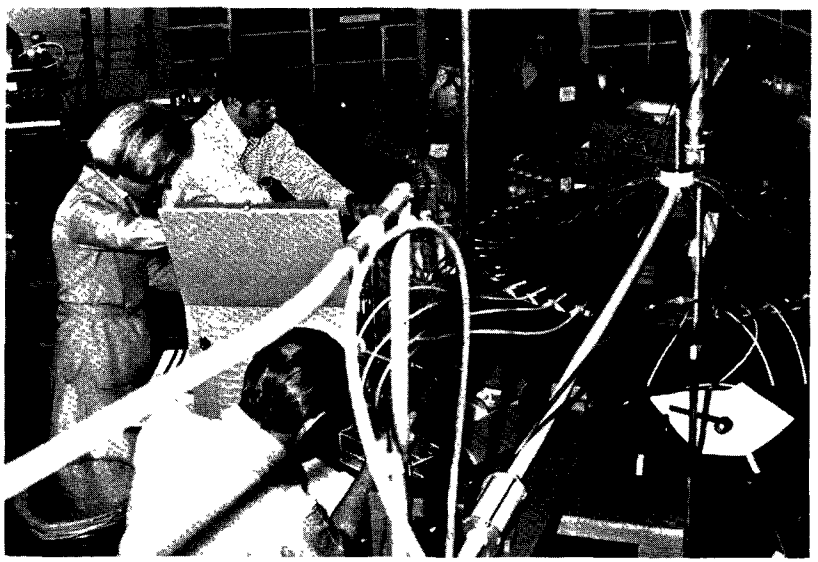

Photo 4 - Collaborators readying sampling train on the spiked line prior to the start of a run.

Figure 14 - Photographs of Collaborators Preparing for a Run and Their Sampling Trains in Operation

TABLE I

SODIUM-ARSENITE COLLABORATIVE TEST SCHEDULE

Run	NO_2 Spiked Level ($\mu g/m^3$)	Date/Time Started	Date/Time Completed
1	311	2-4-74 at 1153	2-5-74 at 1153
2	94.7	2-5-74 at 1229	2-6-74 at 1229
3	203	2-6-74 at 1302	2-7-74 at 1302
4	56.1	2-7-74 at 1330	2-8-74 at 1330

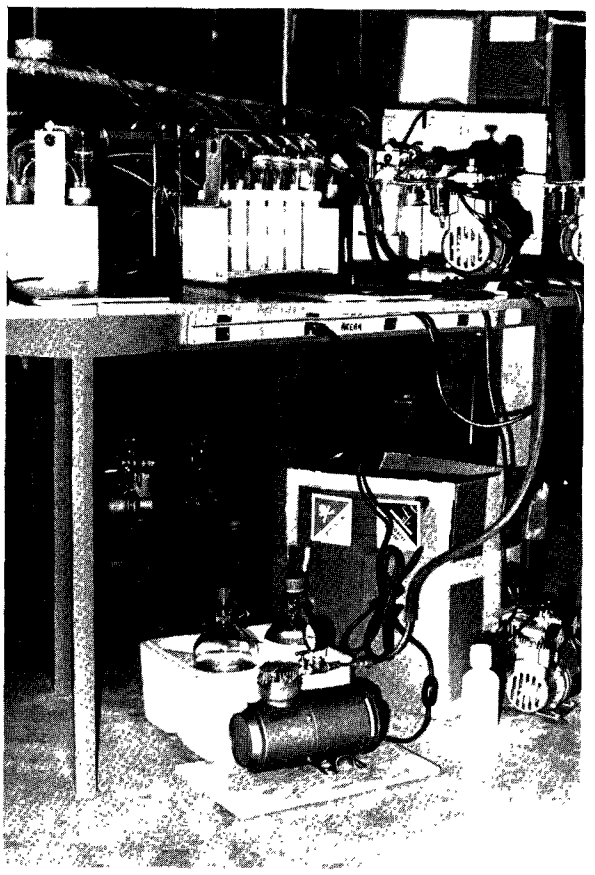

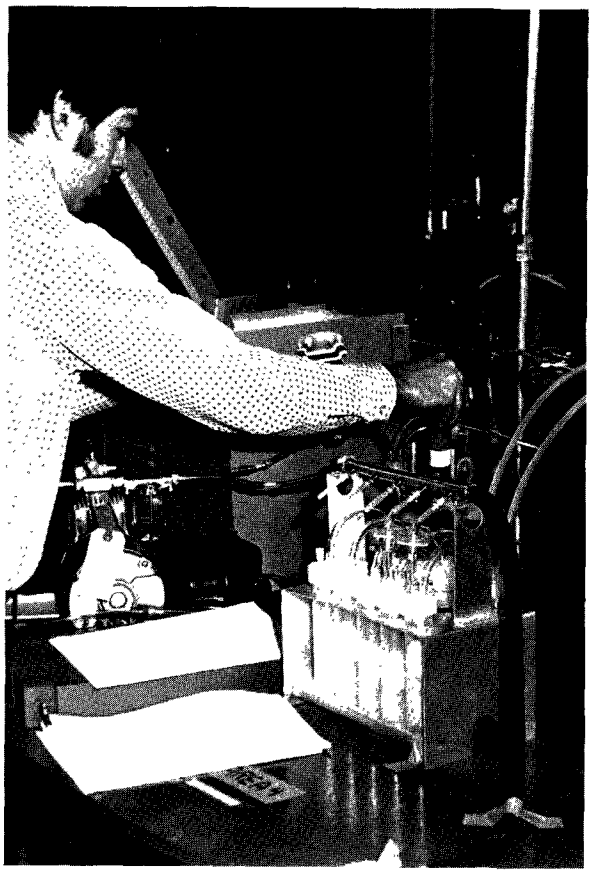

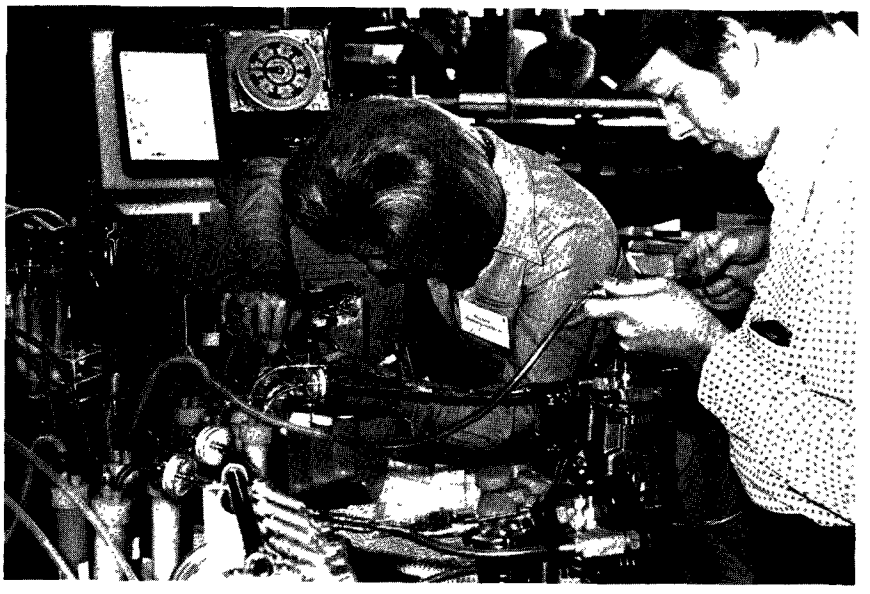

Figure 15 - Photographs of Collaborators' Sampling Trains

MRI DERAMUS FIELD STATION - K.C. MO.

NITROGEN DIOXIDE DATA SHEET - SODIUM ARSENITE METHOD

Sampling

Collaborator _____ Run Number _____
Sampled by _____ Sampling Port Number _____

Sampling Train No. _____

Bubbler Identification No. _____

Rotameter Description (make, model, etc.,) _____
_____

Rotameter reading at start _____ at finish _____ type of ball _____

Start:Date _____ Time _____ Finish:Date _____ Time _____

Sampling duration (min) _____ Sample flow rate (cm^3/min) _____

Total air volume sampled (m^3) _____

Remarks:

Analysis

Date of Analysis _____

Analyzed by: Person _____ Organization _____

Standardization plot slope (absorbance units/µg NO_2/ml)_____

Absorbance of sample against blank (540 nm) _____ Aliquot (ml) _____

NO_2 Concentration (µg/m^3) _____

Remarks:

Figure 16 - Nitrogen Dioxide Data Sheets--Sodium-Arsenite Method

During 31 January - 1 February--just prior to the start of the test on Monday, 4 February--MRI prepared standard samples. These samples were drawn from the spiked line (a challenge from the NO_2 permeation tube source) into absorbing solutions which were contained in 150-ml impingers. The solutions from all impingers were mixed to provide a homogeneous sample. Individual samples were then prepared for the collaborators and MRI. Each collaborator was given one NO_2 sample and one blank (absorbing solution only) to be analyzed at the home laboratory along with his test samples. MRI followed the method in preparing for sampling and sampling with the exception that the trains were scaled upward.

The samples taken by the collaborators, as well as MRI's standard samples given to them, were either taken with them when they returned home, or shipped to them by MRI. The samples were shipped via air mail on different days to insure against loss of all samples of a collaborator in case a shipment was lost or destroyed.

MRI had a laboratory supervisor who was in charge of the NO_2, ambient-air system operation. He was on duty from 0800 to 1700 each day, which was the period of run starts and completions. He was available anytime during the 24-hr runs, if any problems arose, as was the program manager.

There was a technician on duty throughout each run at all times during the test. These people monitored the sampling system operation, recording operational data and general observations. A general log book was kept as well as the log sheets for operational data. Copies of these log sheets are given in Appendix F.

VII. ANALYSES OF SAMPLES

This section discusses the analyses performed by the collaborators and by MRI. The collaborators' analyses were of the samples they took during the test from both the spiked and unspiked lines, and the standard samples prepared by MRI and given to them. For each of the four test runs in the field, each collaborator had four spiked samples and two unspiked samples. In addition, each collaborator had two standard samples--one blank and one NO_2.

A. Analyses Performed by the Collaborators

The collaborators performed the analyses of their samples according to the procedures given in the Sodium-Arsenite Method, with two exceptions: (1) on 5 February 1974 all collaborators were asked to measure the absorbance

at 530 nm rather than 540 as stated in the method writeup (see Section VII.B. for more details); and (2) Collaborator A who corrected his results for pressure and temperature. In eight out of 10 cases, the collaborators' representative who performed the field sampling also performed the analyses of the samples at the collaborators' home laboratory. Only Collaborators B and C had a different person perform the analyses of the samples. Information on the collaborators' analysis instrumentation as well as their comments on the test are given in Appendix G.

B. Collaborators' Results

The one primary set of results the collaborators furnished MRI is the results of their chemical analysis of their samples. These data, which include calibration and absorbance data relating to these results, as well as raw field data that resulted from sampling in the field, are given in Volume II of this report.

For convenience, these final results of the collaborators' analyses are summarized in Table II. There are two sections to Table II: the top portion that gives measurements from the test samples taken by the collaborators; and the bottom portion that gives the results of the collaborators' analyses of the standard samples given them. Column 1 of the top portion of Table II gives the NO_2 level that is mixed with the ambient air to form the run's challenge. It does not include the quantity of NO_2 that was present in the ambient air (see Section VIII for information on the "True Value"). Column 2 and suceeding even columns provide the NO_2 values the collaborators measured during each run. There are six values per run; two are from the two samples taken from the ambient air (unspiked) manifold; and four from the spiked manifold (each collaborator pulled all six of his 24-hr samples simultaneously). Column 3 and succeeding odd columns provide the values MRI obtained when it checked the collaborators' calculations.

MRI's check of the collaborators' result was a gross overall check to determine if there were major errors due to, for example, misplacement of the decimal point. Minor difference could be attributed to the reading of the collaborators' calibration curves.

C. Analysis of Samples by MRI

Standard samples* prepared by MRI as well as some samples MRI obtained from the NO , ambient air sampling system just prior to the collaborative test were analyzed by MRI according to the Sodium-Arsenite Method, using

* These were from the same solutions as were the standard samples given to the collaborators.

TABLE II

COLLABORATOR RESULTS FROM COLLABORATIVE TEST
USING THE SODIUM-ARSENITE METHOD

($\mu g/m^3$)		Collaborator Organizations																		
		A	MRI	B	MRI	C	MRI	D	MRI	E	MRI	F	MRI	G	MRI	H	MRI	I	MRI	J	MRI
Level 1[a]																					
Spike = 299 $\mu g/m^3$ (Run 1)	unspiked	9.76	11.00	9.2	6.1	14.7	13.2	12.79	8.9	11.54	12.4	11.65	10.6	15	13.0	17.8	15.6	11.1	11.1	11.3	13.4
		11.75	13.75	8.4	5.6	15.52	14.3	12.98	11.3	11.54	12.0	15.73	14.8	11	9.1	18.3	16.2	10.3	9.9	12.6	14.7
	spiked	270.6	329.0	290.0	292.0	303.84	304.0	322.32	323.0	288.53	291.0	287.18	288.0	316	314.0	326.0	326.0	249.8	301.0	311.9	314.0
		-	311.0	264.0	267.0	287.90	289.0	324.52	324.0	290.27	291.0	277.69	278.0	294	293.0	321.0	322.0	255.3	308.0	311.5	314.0
		198.0	240.0	264.0	268.0	301.48	294.0	332.00	332.0	297.01	302.0	310.78	287.0	313	312.0	317.0	318.0	246.7	297.0	303.5	305.0
		264.0	320.0	263.0	266.0	296.64	296.0	315.26	315.0	318.33	319.0	295.04	295.0	294	293.0	327.0	328.0	237.9	281.0	307.8	310.0
Level 2[a]																					
Spike = 90.9 $\mu g/m^3$ (Run 2)	unspiked	19.3	22.6	20.0	17.4	21.14	19.7	30.49	28.4	25.49	26.9	23.30	20.7	26	24.0	28.8	26.7	16.6	17.8	24.6	26.8
		21.4	25.2	14.0	11.7	22.06	20.4	25.31	24.1	25.01	26.9	23.30	20.7	13	10.5	28.0	25.9	15.0	15.8	23.7	25.9
	spiked	92.4	111.0	99.0	97.8	112.77	112.0	104.08	103.0	107.72	110.0	103.93	104.0	114	112.0	121.0	120.0	92.9	110.0	115.2	117.0
		94.2	114.0	100.0	98.7	106.02	105.0	102.36	99.9	109.54	111.0	84.37	83.5	90	88.8	114.0	112.0	87.2	103.0	115.3	117.0
		81.0	97.3	101.0	101.0	102.37	100.0	125.62	122.0	112.12	114.0	103.54	103.0	116	113.0	113.0	112.0	92.9	110.0	113.4	115.0
		77.4	92.8	100.0	99.7	107.89	105.0	106.37	104.0	118.44	119.0	103.54	103.0	115	112.0	118.0	116.0	94.2	112.0	115.7	118.0
Level 3[a]																					
Spike = 197 $\mu g/m^3$ (Run 3)	unspiked	30.35	36.5	30.0	27.3	30.38	28.7	35.20	33.1	35.40	33.4	29.34	28.1	29	27.6	37.0	35.0	23.5	26.1	31.9	34.1
		28.95	34.8	29.0	26.5	31.87	30.3	36.68	34.4	38.47	38.8	27.19	26.0	26	24.2	36.7	34.8	27.1	30.5	32.3	34.5
	spiked	196.1	241.0	194.0	195.0	211.45	207.0	238.35	257.0	200.60	202.0	209.73	210.0	226	225.0	246.0	244.0	182.5	219.0	227.0	229.0
		173.5	213.0	189.0	191.0	224.48	225.0	253.91	247.0	219.07	221.0	203.90	204.0	215	214.0	169.0	168.0	189.5	228.0	239.2	241.0
		155.2	190.0	197.0	199.0	211.45	205.0	257.23	256.0	222.45	224.0	221.38	222.0	240	238.0	231.0	231.0	177.3	213.0	225.9	228.0
		183.8	224.0	198.0	200.0	222.80	217.0	248.02	247.0	239.87	242.0	192.25	190.0	219	217.0	237.0	237.0	182.8	219.0	233.1	235.0
Level 4[a]																					
Spike = 54.4 $\mu g/m^3$ (Run 4)	unspiked	24.12	29.0	30.0	28.0	27.30	25.7	30.49	26.7	34.62	34.7	29.50	27.2	26	24.5	38.9	36.9	21.8	24.0	32.4	34.6
		24.94	29.8	30.0	27.3	28.67	27.0	31.06	29.9	34.62	35.5	29.13	26.8	27	23.8	37.3	35.4	23.5	26.1	31.3	33.4
	spiked	54.3	65.0	76.0	74.4	79.30	78.2	95.44	91.9	79.00	80.0	75.72	75.6	81	79.6	92.3	90.8	67.7	79.8	84.1	86.2
		62.4	74.9	72.0	71.1	81.15	79.9	70.17	68.0	78.50	79.9	63.77	61.8	78	76.4	77.3	76.3	67.0	79.0	83.9	86.0
		55.7	67.7	69.0	67.8	81.12	78.5	77.52	76.9	82.61	84.1	75.72	75.6	82	78.1	85.8	84.3	62.0	72.9	86.0	88.2
		60.6	72.8	71.0	69.8	78.57	77.3	87.28	84.9	87.43	89.4	75.72	75.6	78	76.2	89.3	87.8	68.4	80.6	85.1	87.1
Standards ($\mu g/ml$)																					
(MRI's value = 1.00)		1.092		1.007		1.03		0.51		1.00		1.03		1.01		1.033		1.01		0.994	
blank		0.017		0.0		0.006		0.01		0.0		0.02		0.01		0.012		0.01		0.005	

a/ Spiked levels added to ambient air in spiked line. Values given do not include ambient levels of NO_2. These spiked levels are the values of the spiked NO_2 at the ports from which the collaborators attached their sampling devices. See Section VIII for information on "True Value" or that value the collaborators should have obtained.

a Varian-Cary Model 118 UV-Visible Scanning Spectrophotometer. The results of this analysis showed that maximum absorption occurred at 530 nm, rather than 540 nm as stated in the method writeup. The set of samples that gave the 530-nm peak was processed using Product No. N-21, Lot No. 711520 which was taken from a bottle that had been previously used and had been on the shelf for an unknown time. When a capsule of NEDA Product No. N-30, Lot No. 790988, Sample 2 of Table III was used, a 542-nm peak was obtained. Thus, the question arose as to which peak was the correct one.

TABLE III

DATA ON NEDA MATERIALS USED IN THE SODIUM-ARSENITE METHOD, ABSORPTION PEAK INVESTIGATION

Sample No.	Source	Product No.	Lot No.	Form	Wavelength for Method (nm)
1	Fisher Scientific Company	N-21	711520	Powder	530
2	Fisher Scientific Company	N-30	790988	Capsule	542
3	Fisher Scientific Company	N-30	730606	Capsule	542
4	J. T. Baker Chemical Company	R-702	304001	Powder	542
5	Matheson, Coleman & Bell Manufacturing Chemists	NX230	Not identified	powder	542

In an attempt to gain an explanation for the difference in wavelengths, a limited investigation was undertaken using two additional sources of NEDA material (Samples 4 and 5 of Table III) plus a new sample (No. 3) from the original source purchased specifically for this investigation. A solution of NEDA was made from each of these materials, and each solution was reacted, according to the Sodium-Arsenite Method, with a solution containing 0.1 µg NO_2^-/ml. Each resulting colored solution was scanned between 575 and 500 nm using the Varian-Cary Spectrophotometer. Using the three new samples the reacted solutions peaked at 542 nm, similar to what Lot 790988 had given.

As a further point of investigation, a diluted solution of unreacted NEDA* from each of the five samples noted in Table III was scanned, using the same Varian-Cary Spectrophotometer. The solution prepared from Samples 2 through 5 gave the results shown in Figure 17--a broad absorption band at 320 nm. The solution prepared from Sample 1 had four minor absorption bands--peaking at 305, 290, 280 and 268 nm--in addition to the major band of 320 nm. These latter results are shown in Figure 18.

To check the effect of possible pH variations on the maximum absorption of the NEDA solutions, the absorbance of a sample mixed with reagents as per the method was first run from 520-550 nm on a Beckman DU. Maximum absorbance was found to be 540 nm. The pH was 1.9. To the remaining portion of this sample (40 ml), 10 millimoles of NaOH was added in an attempt to raise the pH. The pH changed to 3.0 after the addition and the maximum absorbance remained at 540 nm. From this test, the solution is very well buffered by the phosphoric acid and the absorption maximum is not affected by reasonable pH variations.

Results of this limited investigation suggest that impurities in the NEDA material may be the cause of the different absorption peaks.

D. Test Site Operational Measurement Data

The results of monitoring the NO_2 ambient-air sampling system during the four runs of this test are given in Appendix F. These data are summarized in Tables F-I through F-IV of Appendix F, for Runs 1 through 4. Column 1 of these tables gives the date and time measurements were made; Columns 2 through 10 give NO_2 sampling system data; Columns 11 through 15 give calculated flow rates and spike levels; and Columns 16 through 21 give information on ambient conditions at the test site.

VIII. STATISTICAL ANALYSIS OF COLLABORATORS' RESULTS

The collaborators sampled from both the spiked and unspiked lines of the NO_2 ambient-air sampling system, providing two sets of collaborators' results. The two sets of results were used to determine true values of the levels of NO_2 that comprised the challenges to the collaborators' sampling trains. In addition, for both sets of results, there was an analysis of variance made to estimate biases and components of variances--the variances of repeated observations and variances between collaborators.

---

* NEDA = N-(1-naphthyl)-ethylenediamine dihydrochloride.

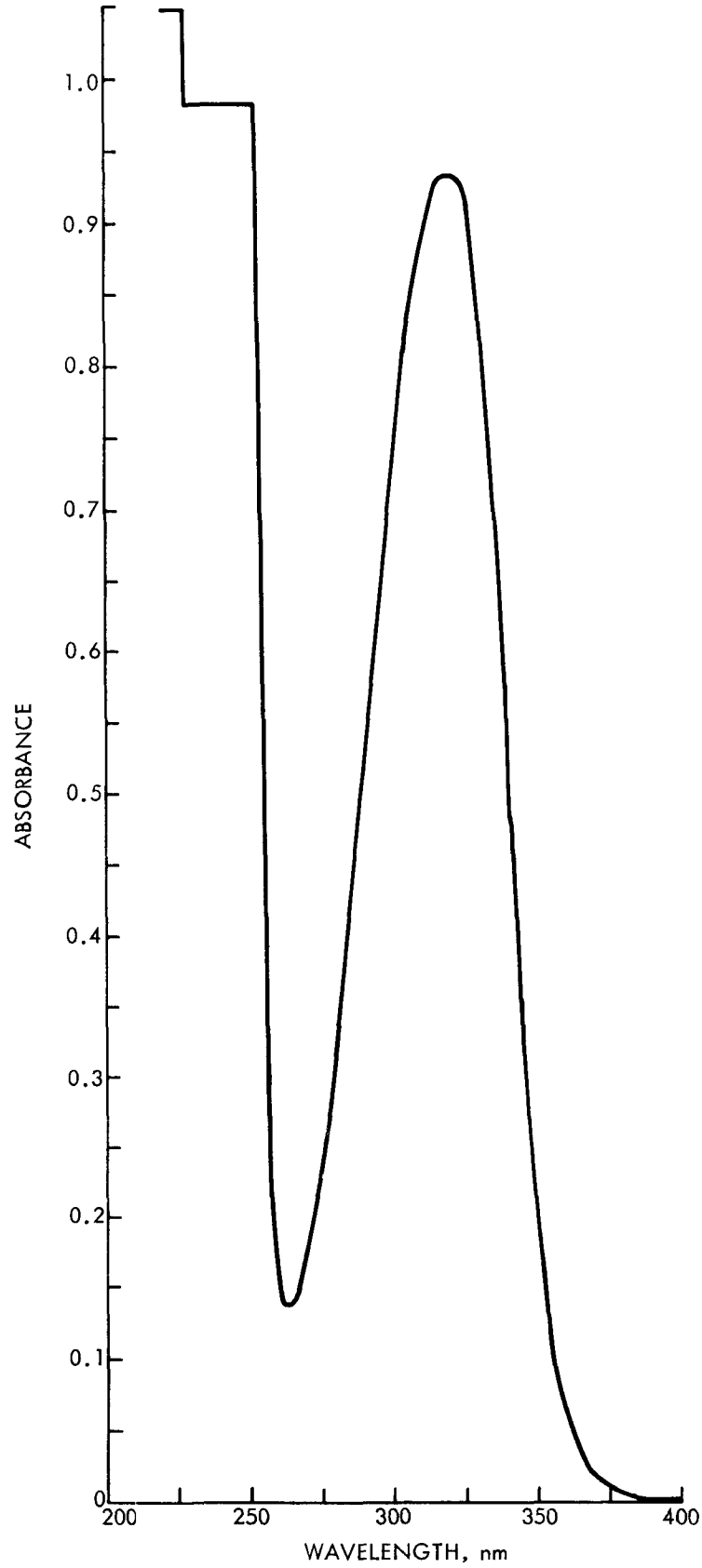

Figure 17 - Typical Scan of Unreacted NEDA Solutions That Gave a Broad Absorption Peak at 320 nm

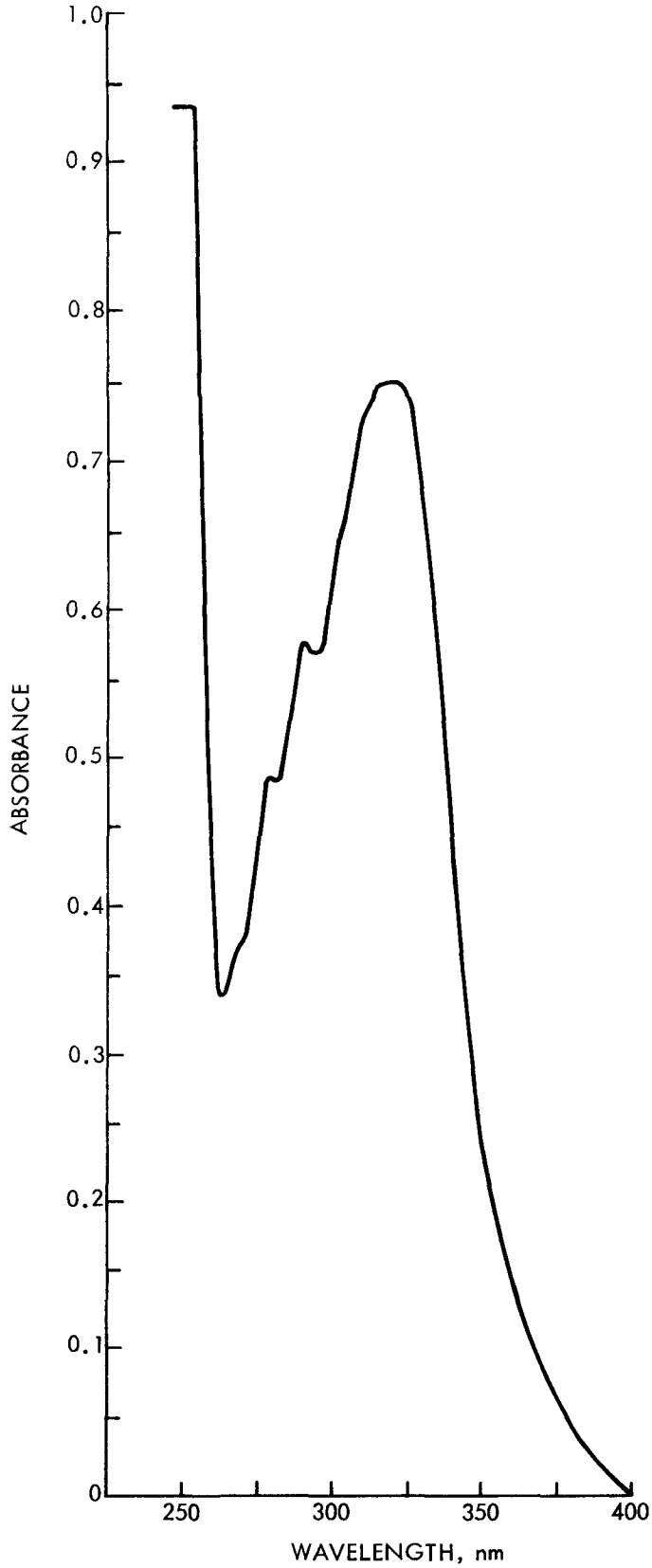

Figure 18 - Typical Scan of Unreacted NEDA Solution That Gave Minor Absorption Peaks, as Well as a Major Absorption Peak at 320 nm

An analysis of variance model for the collaborative test is:

$$X_{ijk} = \mu + C_i + L_j + CL_{ij} + e_{k(ij)},$$

where μ = over all mean

C_i = i^{th} collaborator, i = 1, . . . , 10

L_j = j^{th} NO_2 level, j = 1, . . . , 4

$e_{k(ij)}$ = residual error in k^{th} measurement in ij^{th} cell

k = 1, . . . , 4 $\forall$ ij

CL_{ij} = collaborator level interaction

X_{ijk} = ijk^{th} bias, i.e., ijk^{th} determination - true value.

The NO_2 level is a fixed factor, but the collaborators are considered to be a random factor; i.e., the 10 collaborators numbered A through J used in the experiment are considered a sample drawn from a population of possible collaborators. Thus, the expected mean squares (EMS) are:

Term	EMS
C	$\sigma_e^2 + 16\ \sigma C_2$
L	$\sigma_e^2 + 4\ \sigma_{CL}^2 + 40\ \sigma_L^2$
CL	$\sigma_e^2 + 4\ \sigma_{CL}^2$
e	σ_e^2

The true value is the spiked level of NO_2 plus the ambient NO_2--the ambient level, of course, being unknown. Therefore, a true value is taken as the spiked amount plus the average ambient determination of all collaborators. For example, the true level 1 of NO_2 is taken as 311.7 $\mu g/m^3$, because 299 $\mu g/m^3$ NO_2 were spiked and the average ambient reading from the 10 collaborators was 12.7 $\mu g/m^3$.

An individual response is a bias (collaborator's reading of spiked line minus the true value). For example, Collaborator A's first reading of level 1 in the spiked line was 270.6 $\mu g/m^3$, so X_{111} = 270.6 - 311.7 = -41.1 $\mu g/m^3$, etc. Since subtracting the true value is merely coding the data, the components of variance are unaffected by the use of biases rather than spiked readings as the response.

There was one missing data point (X_{112}), and two other readings (X_{113}, X_{832}) were discarded as outliers.* Thus, three artificial readings were inserted (via minimizing σ_e^2) and the error degrees of freedom are 117 (rather than 120).

The assumption of homeoscedasticity (equal variance in all cells) was checked by computing the cell ranges (R) and $\bar{R}$ for each NO_2 level (see Table IV).** Although $\bar{R}$ is not uniform, it is not a monotonic function of L either, although it is essentially monotonic over the first three levels of NO_2. Therefore, no data transformation was applied. However, the σ_e variance of repeated measurements, estimates from an analysis of variance per NO_2 level are probably more realistic than the total σ_e, and such level σ_e's were computed.

TABLE IV

$\bar{R}$ VERSUS NO_2 LEVEL

$\bar{R}$	L ($\mu g/m^3$)	$\bar{R}/L$ (%)
9.1	84.1	11
12.6	113.2	11
22.4	228.3	10
19.2	311.7	6

A complete analysis of variance is desirable in order not to lose an examination of the CL interaction.

A complete analysis of variance was performed (see Table V). However, two collaborators (A and I) have much larger negative biases than everyone else and these two collaborators made systematic computational errors. Thus, the remaining eight collaborators represent the bias situation when no computational errors are made. Therefore, the analysis of variance of these eight alone was also performed (see Table VI). As would be expected, the error variances (repeatabilities) are essentially unaffected by deleting Collaborators A and I; i.e., σ_e^2 is unaffected, but σ_C^2 is reduced.

---

* Via the Dixon Test ($\alpha = 0.05$).
$r_{10}(X_{113}) = 0.909$
$r_{10}(X_{832}) = 0.827$

** $\bar{R}$ is proportional to σ, and for small sample sizes just about as efficient.

TABLE V

ANALYSIS OF VARIANCE

(All 10 Collaborators)

Source	dF	SS	MS	F
C	9	31,415.2	3,490.58	49.71
L	3	3,165.6	1,055.21	1.74
CL	27	16,341.3	605.23	8.62
e	117	8,215.6	70.22	--

dF = Degrees of freedom.
SS = Sum of squares.
MS = Mean square.
F = F ratio or F test.

TABLE VI

ANALYSIS OF VARIANCE

(Collaborators A and I Deleted)

Source	dF	SS	MS	F
C	7	7,406.9	1,058.12	15.90
L	3	704.2	234.72	< 1.00
CL	21	11,335.0	539.76	8.11
e	94	6,256.0	66.55	--

dF = Degrees of freedom.
SS = Sum of squares.
MS = Mean square.
F = F ratio or F test.

A. Analysis of the Spiked NO_2 Measurements

A discussion of Tables V and VI (a discussion of biases) will follow, and then the components of variance analysis will be presented. In all the following discussions only the eight collaborators free of computational errors will be used.

1. Biases: Collaborators differ significantly in their average bias, and the "calibration curves" (bias versus level) for the various collaborators are significantly nonparallel. However, bias is not a function of the level of NO_2.

In general, collaborators read about 6.2 $\mu g/m^3$ low (see Table VII). The collaborators can be divided into five groups* with one collaborator (J) reading without bias. Two collaborators read with a positive bias, and seven collaborators (including A and I) have a negative bias. (See Table VIII).

TABLE VII

BIAS ($\mu g/m^3$) PER NO_2 LEVEL

NO_2 ($\mu g/m^3$)	Eight Collaborators	
	Bias	% True
L1 (311.7)	-9.7	3
L2 (133.2)	-4.7	4
L3 (228.3)	-5.7	2
L4 (84.1)	-5.1	5
All levels (average 184.3)	-6.2	3

* Via the Fisher method.

TABLE VIII

COLLABORATOR BIASES ($\mu g/m^3$) - ALL NO_2 LEVELS

Collaborator	Average Bias ($\mu g/m^3$)	Bias/True (%)	Group[a/]
B	-25.1	13.6	1
C	-8.7	4.7	3
D	6.4	3.5	5
E	-6.1	3.3	3
F	-16.6	9.0	2
G	-4.9	2.7	3
H	6.0	3.3	5
J	0.6[b/]	0.3	4

The CL interaction term is significant, i.e., the bias versus level curves per collaborator are not all parallel. (See Table IX and Figure 19.)

a/ Members of a group do not differ significantly in average bias.

b/ Not significantly different from zero.

TABLE IX

COLLABORATOR PERCENT BIAS PER LEVEL

Collaborator	84.1 $\mu g/m^3$	113.2 $\mu g/m^3$	228.3 $\mu g/m^3$	311.7 $\mu g/m^3$
B	-14	-12	-15	-13
C	-5	-5	-5	-5
D	-2	-3	9	3
E	-3	-1	-3	-4
F	-12	-13	-9	-6
G	-5	-4	-1	-2
H	2	3	3	4
J	1	2	1	1

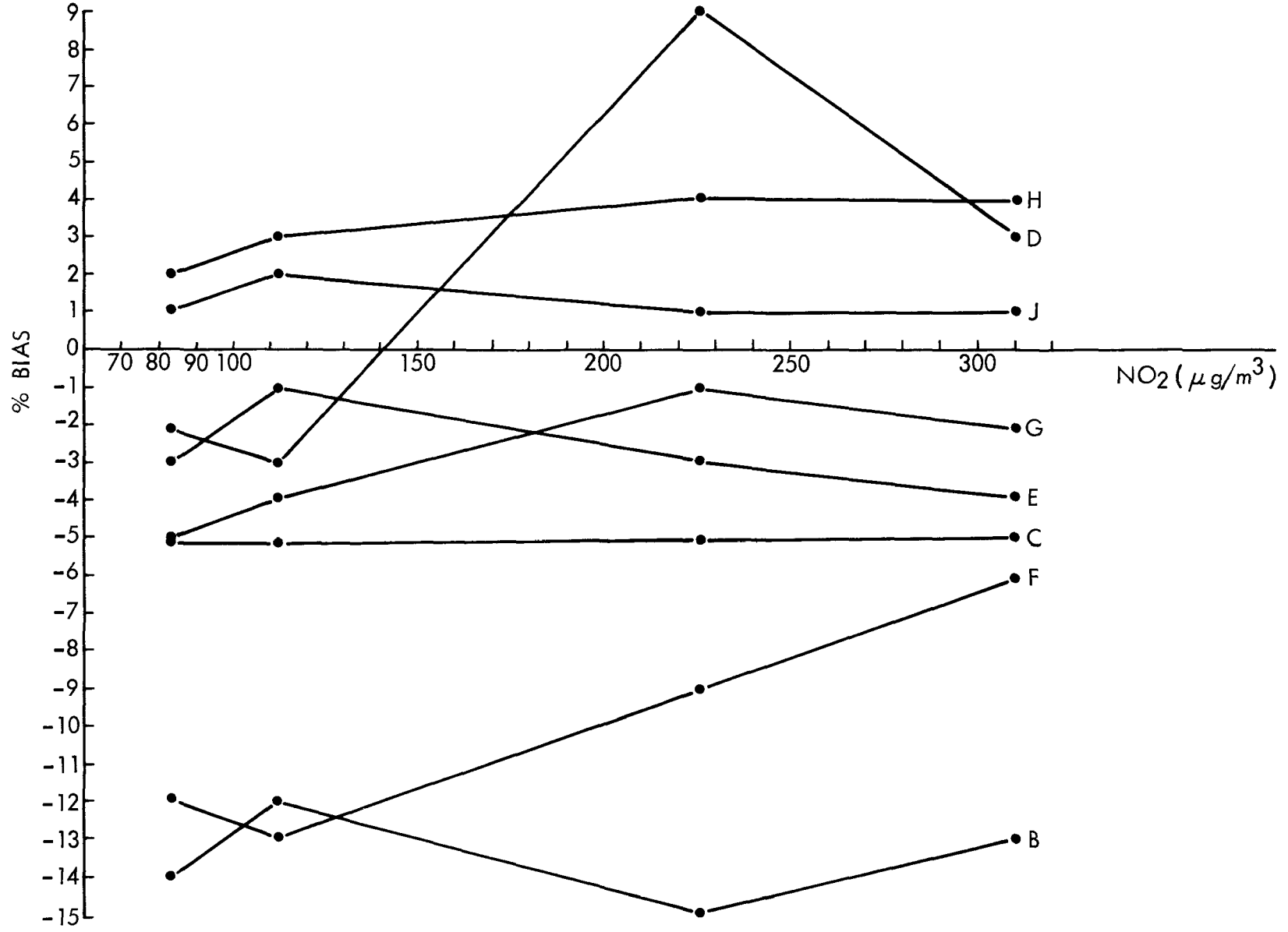

Figure 19 - Collaborator Percent Bias Per Level of NO_2

Note that almost all the CL interaction is due to the variable bias per level exhibited by Collaborator D. In other words, although there is a significant CL interaction, seven of the eight collaborators produced a relatively uniform percent bias, irrespective of the NO_2 level.

2. Components of variance: The components of variance σ_e^2 and σ_c^2 are shown in Table X. The components σ_e^2 and σ_c^2 are about the same size. The residual standard deviation is about 8 $\mu g/m^3$. Thus, a given collaborator will reproduce his own value within about $\pm$ 16 $\mu g/m^3$.[1/] A set of collaborators will produce readings about $\pm$ 22 $\mu g/m^3$[2/] around their central value if none of them made any computational errors. Since the average bias is -6.2 $\mu g/m^3$, we conclude that: (1) a given collaborator will read 6.2 $\mu g/m^3$ too low, $\pm$ 16 $\mu g/m^3$, and (2) a set of collaborators will read 6.2 $\mu g/m^3$ too low, $\pm$ 22 $\mu g/m^3$.[3/]

TABLE X

COMPONENTS OF VARIANCE (ALL NO_2 LEVELS)

	8 Collaborators
σ_e	8.15
σ_C	7.87
$\left(\sigma_e^2 + \sigma_C^2\right)^{1/2}$	11.34

The measurement error, σ_e, does vary with the NO_2 level. (See Table XI.)

1/ Using 2σ limits.

2/ Because $\sqrt{\sigma_e^2 + \sigma_c^2} \cong 11$ $\mu g/m^3$.

3/ Using, in the customary way, $\sqrt{\sigma_e^2 + \sigma_c^2}$ as the appropriate standard error. Actually, the inclusion of σ_{c1}^2 is just as physically realistic, so that a set of collaborators could be said to read 6.2 $\mu g/m^3$ too low, $\pm$ 31.4 $\mu g/m^3$ ($\sqrt{\sigma_e^2 + \sigma_c^2 + \sigma_{c1}^2} = 15.7$ $\mu g/m^3$). The customary definition of reproducibility is preserved in the text.

TABLE XI

MEASUREMENT ERROR (σ_e) PER NO_2 LEVEL

NO_2 Level	Eight Collaborators
84.1 $\mu g/m^3$	5.38
113.2 $\mu g/m^3$	7.25
228.3 $\mu g/m^3$	9.80
311.7 $\mu g/m^3$	9.33

The values of σ_e in Table XI are probably better to use (in conjunction with σ_C from Table X) in predicting precisions at a given NO_2 level.

After copies of the data were sent to all collaborators, Collaborator I noticed its large negative bias and found the reason for it. Thus, Collaborator I corrected its readings, after being shown in effect that it was biased. Since Collaborator I presumably would not have discovered its error if it alone had performed the experiment, the results computed from its mistaken readings are the ones heretofore reported and discussed.

B. Summary Discussion

There is a general bias to the NO_2 determinations, but is is relatively small ($\sim$ 3%) and independent of the NO_2 level. (Unless, of course, a computational bias is inserted.) Various collaborators differ in the amount of bias shown, but this variability is also relatively small, i.e., the variance between collaborator means is not too large ($\sigma_C \sim 4\%$ true value).

The measurement errors are essentially uniform for all collaborators, but do depend on the NO_2 level. The measurement error is about the same size as the collaborator error if no computational errors are made ($\sigma_e \sim 4\%$ true value). There is a significant difference between collaborators in bias vs NO_2 level curves. However, eight of 10 collaborators exhibit a uniform percent bias over all NO_2 levels, so that the method (as opposed to all collaborators) seems to produce a reasonably linear performance over the range of NO_2 examined.

It should be remembered that a "replicate" in this experiment was not, strictly speaking, a true replicate, i.e., a complete duplicate of determination of NO_2. This was necessary for practical consideration in running the experiment, but since all replicates were performed simultaneously the estimated σ_e's should probably be regarded more or less as lower bounds or ideal repeatibilities.

C. Analysis of the Unspiked Ambient NO_2 Measurements

The ambient NO_2 determinations can, of course, also be considered as a response and subjected to the analysis of variance. Thus σ_e^2 and σ_C^2 can be estimated for ambient measurements, and these components of variance compared to their counterparts for the spiked level readings. Also, the rank order of collaborators when measuring ambient NO_2 can be compared to the order of collaborators when measuring spiked NO_2.

The analysis of variance is shown in Table XII. The comparison between unspiked ambient and spiked components of variance is displayed in Table XIII. The relative size of σ_e vs σ_C is virtually the same for ambient levels and spiked levels. However, the relative errors in the ambient readings are larger than their counterparts for the spiked levels.

TABLE XII

ANALYSIS OF VARIANCE OF UNSPIKED AMBIENT NO_2 MEASUREMENTS
(eight collaborators)

Total	63	4,625.7		
Collaborator	7	514.5	73.51	15.37
Level	3	3,750.0	1,250.01	261.40
CL	21	208.1	9.91	2.07
Error	32	153.0	4.78	

TABLE XIII

COMPARISON UNSPIKED AMBIENT VS SPIKED COMPONENTS OF VARIANCE
(eight collaborators)

	σ_e	σ_C	σ_e/σ_e	CV(e) (%)	CV(C) (%)
Ambient	2.19	2.93	1.34	8.8	11.7
Spiked	8.16	11.13	1.36	4.4	6.0

The correlation between collaborators rank order (relative bias) for the spiked and ambient level is significant, but not overwhelming (r_{sp} = + 0.77); that is, the biases in determining NO_2 concentration appear to exist in approximately the same fashion per collaborator whether ambient levels or spiked levels are observed.

IX. CONCLUSIONS

The major conclusions that can be drawn from the results of this collaborative test are:

1. The NO_2, ambient-air sampling system developed by MRI is an effective system for use in collaborative testing of manual methods such as the sodium-arsenite procedure.

2. The "Tentative Method for the Determination of Nitrogen Dioxide in the Atmosphere (Sodium-Arsenite Procedure)" is adequately written for those knowledgeable of sampling and analysis techniques as presented therein.

3. If the tentative sodium-arsenite procedure as given in Appendix A of this report is followed by people knowledgeable of the sampling and analysis techniques given therein, then such persons will obtain results that are on the average 6.2 $\mu g/m^3$ too low, ± 16 $\mu g/m^3$, over the range 50-300 $\mu g/m^3$. If a set of such people, each sampling independently, follow the method, then results will be on the average 6.2 $\mu g/m^3$ too low, ± 22 $\mu g/m^3$.

X. RECOMMENDATIONS

Based upon the conclusions that have been drawn from the results of this collaborative test, it is recommended that:

1. The same NO_2 sampling system be used in the evaluation of the remaining NO_2 methods to be tested;

2. The data sets to be obtained from the subsequent methods to be evaluated be based on experimental designs, test procedures and sampling system operational procedures as similar as possible to those of the sodium-arsenite collaborative test so that comparisons of the methods are based on similar criteria; and

3. No further analysis be made of the results from the sodium-arsenite method until the results from the other three methods are obtained.

APPENDIX A

TENTATIVE METHOD FOR THE DETERMINATION OF NITROGEN DIOXIDE IN THE ATMOSPHERE (SODIUM-ARSENITE PROCEDURE)

ENVIRONMENTAL PROTECTION AGENCY

METHODS STANDARDIZATION BRANCH

QUALITY ASSURANCE AND ENVIRONMENTAL MONITORING LABORATORY

NATIONAL ENVIRONMENTAL RESEARCH CENTER

RESEARCH TRIANGLE PARK, NORTH CAROLINA 27711

NOVEMBER 1973

TENTATIVE METHOD FOR THE DETERMINATION OF NITROGEN DIOXIDE IN THE ATMOSPHERE (SODIUM ARSENITE PROCEDURE)[a]

[a] A tentative method is one which has been carefully drafted from available experimental information, reviewed editorially within the Methods Standardization Branch and has undergone extensive laboratory evaluation. The method is still under investigation and therefore, is subject to revision.

1. Principle and Applicability

1.1 Nitrogen dioxide is collected by bubbling air through a sodium hydroxide-sodium arsenite[1] solution to form a stable solution of sodium nitrite. The nitrite ion produced during sampling is reacted with phosphoric acid, sulfanilamide, and N-1-(naphthyl)ethylenediamine dihydrochloride to form an azo dye and then determined colorimetrically.

1.2 The method is applicable to collection of 24-hour samples in the field and subsequent analysis in the laboratory.

2. Range and Sensitivity

2.1 The range of the analysis is 0.04 to 2.0 μg NO_2^-/ml. Beer's law is obeyed through this range (0 to 1.0 absorbance units). With 50 ml absorbing reagent and a sampling rate of 200 cm^3/min for 24-hours, the range of the method is 20 to 750 μg/m^3 (0.01 to 0.4 ppm) nitrogen dioxide.[2]

2.2 A concentration of 0.04 μg NO_2^-/ml will produce an absorbance of approximately 0.02 with 1-cm cells.

3. Interferences

3.1 Nitric oxide is a positive interferent.[3] The presence of NO can increase the NO_2 response by 5 to 15% of the NO_2 sampled.[2]

3.2 The interference of sulfur dioxide is eliminated by converting it to sulfate ion with hydrogen peroxide before analysis.[4]

4. Precision, Accuracy and Stability

4.1 The relative standard deviations for sampling NO_2 concentrations of 78, 105 and 329 μg/m^3 are 3, 4 and 2%, respectively.

4.2 No accuracy data are available.

4.3 Collected samples are stable for at least 6 weeks.

5. Apparatus

5.1 Sampling. A diagram of a suggested sampling apparatus is shown in Figure A-1.

5.1.1 Probe. Teflon, polypropylene, or glass tube with a polypropylene or glass funnel at the end.

5.1.2 Absorption Tube. Polypropylene tubes 164 x 32 mm, equipped with polypropylene two-port closures. Rubber stoppers cause high and varying blank values and should not be used. A glass-tube restricted orifice is used to disperse the gas. The tube, approximately 8 mm O.D.-6 mm I.D., should be 152 mm long with the end drawn out to 0.3 - 0.8 mm I.D. The tube should be positioned so as to allow a clearance of 6 mm from the bottom of the absorber.

5.1.3 Moisture Trap. Polypropylene tube equipped with two-port closure. The entrance port of the closure is fitted with tubing that extends to the bottom of the trap. The unit is loosely packed with glass wool to prevent moisture entrainment.

5.1.4 Membrane Filter. Of 0.8 to 2.0 microns porosity.

5.1.5 Flow Control Device. Any device capable of maintaining a constant flow through the sampling solution between 180-220 cm^3/min. A typical flow control device is a 27 gauge hypodermic needle,[5] three-eights inch long. (Most 27 gauge needles will give flow rates in this range.) The device used should be protected from particulate matter. A membrane filter is

suggested. Change filter after collecting 10 samples.

5.1.6 Air Pump. Capable of maintaining a pressure differential of at least 0.6-0.7 of an atmosphere across the flow control device. This value includes the minimum useful differential, 0.53[5] atmospheres, plus a safety factor to allow for variations in atmospheric pressure.

5.1.7 Calibration Equipment. - Flowmeter for measuring airflows up to 275 cm^3/min. within $\pm$ 2%, stopwatch, and a precision wet test meter (1 liter/revolution).

5.2 Analysis

5.2.1 Volumetric Flasks. 50, 100, 200, 250, 500, 1,000 ml.

5.2.2 Graduated Cylinder. 1,000 ml.

5.2.3 Pipets. 1, 2, 5, 10, 15 ml volumetric; 2 ml, graduated in 1/10 ml intervals.

5.2.4 Test Tubes, approximately 20 x 150 mm.

5.2.5 Spectrophotometer. Capable of measuring absorbance at 540 nm.

6. Reagents

6.1 Sampling

6.1.1 Sodium Hydroxide. ACS Reagent Grade.

6.1.2 Sodium Arsenite. ACS Reagent Grade.

6.1.3 Absorbing Reagent. Dissolve 4.0 g sodium hydroxide in distilled water, add 1.0 g of sodium arsenite and dilute to 1,000 ml with distilled water.

6.2 Analysis

6.2.1 Sulfanilamide. Melting point, 165-167°C.

6.2.2 N-(1-Naphthyl)-ethylenediamine dihydrochloride (NEDA). Best grade available.

6.2.3 Hydrogen Peroxide. ACS Reagent Grade, 30%.

6.2.4 Sodium Nitrite. Assay of 97% $NaNO_2$ or greater.

6.2.5 Phosphoric Acid. ACS Reagent Grade, 85%.

6.2.6 Sulfanilamide Solution. Dissolve 20 g sulfanilamide in 700 ml distilled water. Add, with mixing, 50 ml concentrated phosphoric acid and dilute to 1,000 ml. This solution is stable for one month, if refrigerated.

6.2.7 NEDA Solution. Dissolve 0.5 g of NEDA in 500 ml of distilled water. This solution is stable for one month, if refrigerated and protected from light.

6.2.8 Hydrogen Peroxide Solution. Dilute 0.2 ml of 30% hydrogen peroxide to 250 ml with distilled water. This solution may be used for one month, if protected from light and refrigerated.

6.2.9 Standard Nitrite Solution. Dissolve sufficient desiccated sodium nitrite and dilute with distilled water to 1,000 ml so that a solution containing 1,000 µg NO_2^-/ml is obtained. The amount of $NaNO_2$ to use is calculated as follows:

$$G = \frac{1.500}{A} \times 100$$

G = Amount of $NaNO_2$ grams.

1.500 = Gravimetric factor in converting NO_2 into $NaNO_2$.

A = Assay, percent.

7. Procedure

7.1 Sampling. Assemble the sampling apparatus as shown in Figure 1. Components upstream from the absorption tube may be connected, where required, with teflon or polypropylene tubing; glass tubing with dry ball joints; or glass tubing with butt-to-butt joints with tygon, teflon or polypropylene. Add exactly 50 ml of absorbing reagent to the calibrated absorption tube (8.1.3). Disconnect funnel, insert calibrated flowmeter, and measure flow before sampling. If flow rate before sampling is not between 180 and 220 cm^3/min, replace the flow control device and/or check the system for leaks. Start sampling only after obtaining an initial flow rate in this range. Sample for 24 hours and measure the flow after the sampling period.

7.2 Analysis. Replace any water lost by evaporation during sampling by adding distilled water up to the calibration mark on the absorption tube. Pipet 10 ml of the collected sample into a test tube. Pipet in 1 ml hydrogen peroxide solution, 10 ml sulfanilamide solution, and 1.4 ml NEDA solution with thorough mixing after the addition of each reagent. Prepare a blank in the same manner using 10 ml of unexposed absorbing reagent. After a 10-minute color-development interval, measure the absorbance at 540 nm against the blank. Read $\mu g\ NO_2^-$/ml from the calibration curve (Section 8.2). Samples with an absorbance greater than 1.0 must be reanalyzed after diluting an aliquot (less than 10 ml) of the collected sample with unexposed absorbing reagent.

8. Calibration and Efficiencies

8.1 Sampling

8.1.1 Calibration of Flowmeter. (See Figure A-2). Using a wet test meter and a stopwatch, determine the rates of air flow (cm^3/min) through the flowmeter at a minimum of four different ball positions. Plot ball positions versus flow rates.

8.1.2 Flow Control Device. The flow control device results in a constant rate of air flow through the absorbing solution. The flow rate is determined in Section 7.1.

8.1.3 Calibration of Absorption Tube. Calibrate the polypropylene absorption tube (Section 5.1.1) by first pipeting in 50 ml of water or absorbing reagent. Scribe the level of the meniscus with a sharp object, go over the area with a felt-tip marking pen, and rub off the excess.

8.2 Calibration Curve. Dilute 5.0 ml of the 1,000 µg NO_2^-/ml solution to 200 ml with absorbing reagent. This solution contains 25 µg NO_2^-/ml. Pipet 1, 1, 2, 15, and 20 ml of the 25 µg NO_2^-/ml solution into 100-, 50-, 50-, 250-, and 250- ml volumetric flasks and dilute to the mark with absorbing reagent. The solutions contain 0.25, 0.50, 1.00, 1.50 and 2.00 µg NO_2^-/ml, respectively. Run standards as instructed in 7.2, including the blank. Plot absorbance vs. µg NO_2^-/ml. A straight line with a slope of 0.48 $\pm$ 0.02 absorbance units/µg NO_2^-/ml, passing through the origin, should be obtained.

8.3 Efficiencies. An overall average efficiency of 82% was obtained over the range of 40 to 750 $\mu g/m^3$ NO_2.

9. Calculation

9.1 Sampling

9.1.1 Calculate volume of air sampled.

$$V = \frac{F_1 + F_2}{2} \times T \times 10^{-6}$$

V = Volume of air sampled, m^3.

F_1 = Measured flow rate before sampling, cm^3/min.

F_2 = Measured flow rate after sampling, cm^3/min.

T = Time of sampling, min.

10^{-6} = Conversion of cm^3 to m^3.

9.1.2 Uncorrected Volume. The volume of air sampled is not corrected to S.T.P. because of the uncertainity associated with 24-hour average temperature and pressure values.

9.2 Calculate the concentration of nitrogen dioxide as $\mu g\ NO_2/m^3$ using:

$$\mu g\ NO_2/m^3 = \frac{(\mu g\ NO_2^-/ml) \times 50}{V \times 0.82}$$

50 = Volume of absorbing reagent used in sampling, ml.

V = Volume of air sampled, m^3.

0.82 = Collection efficiency.

9.2.1 If desired, concentration of nitrogen dioxide may be calculated as p.p.m. NO_2 using:

$$p.p.m.\ NO_2 = (\mu g\ NO_2/m^3) \times 5.32 \times 10^{-4}$$

10. References

1. Christie,A. A. et al. "Field Methods for the Determination of Nitrogen Dioxide in Air." Analyst 95, 519-524 (1970).

2. Unpublished results, Environmental Protection Agency, Research Triangle Park, N. C. 27711.

3. Merryman, E. L. et al. "Effects of NO, CO_2, CH_4, H_2O and Sodium Arsenite on NO_2 Analysis." Presented at the Second Conference on Natural Gas Research and Technology in Atlanta, Georgia on June 5, 1972.

4. Jacobs, M. B. and Hochheiser, S., "Continuous Sampling and Ultramicrodetermination of Nitrogen Dioxide in Air," Anal. Chem. 30, 426 (1958).

5. Lodge, J. P. et al. "The Use of Hypodermic Needles as Critical Orifices in Air Sampling." J.A.P.C.A., 16, 197-200 (1966).

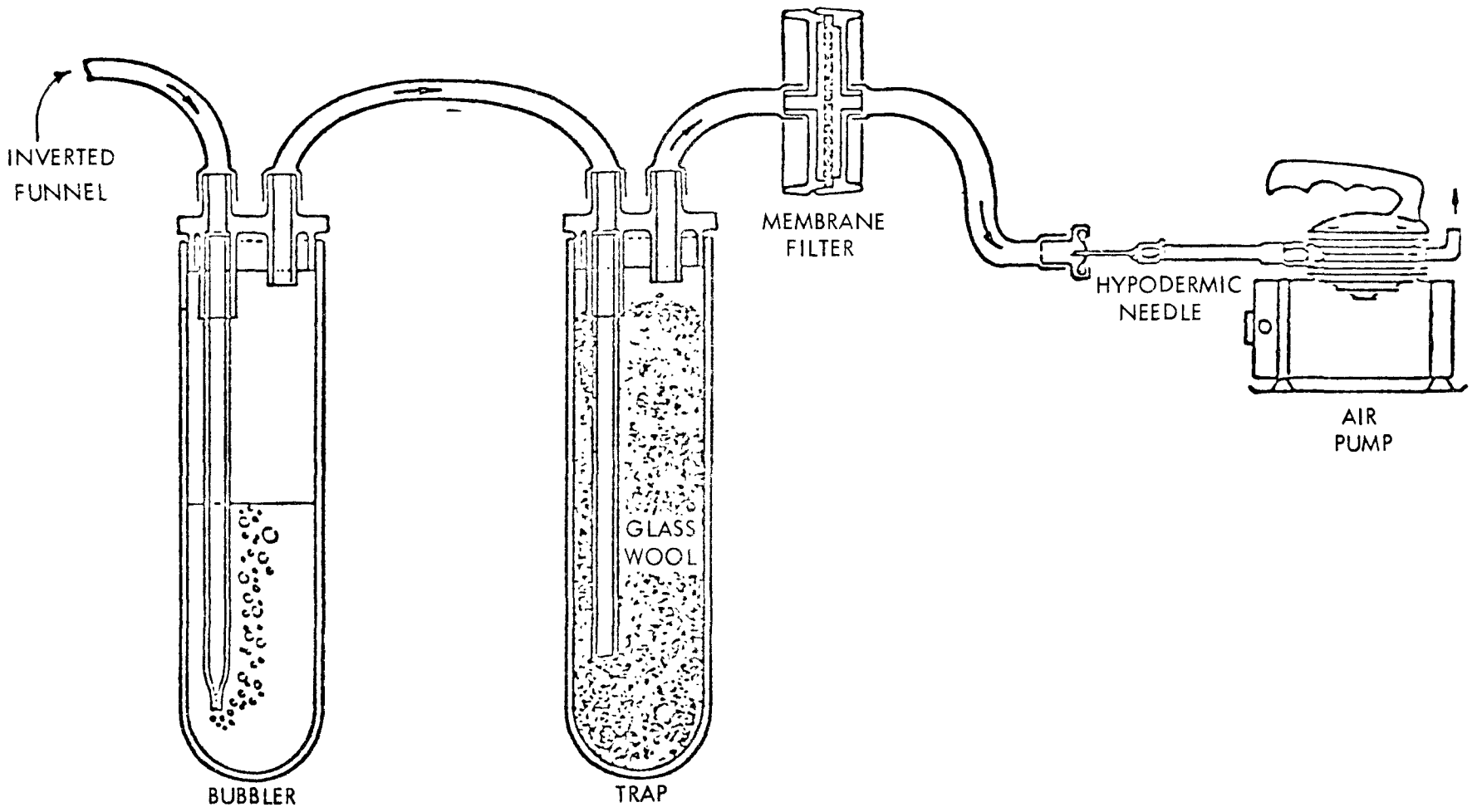

Figure A-1 - Sampling Train

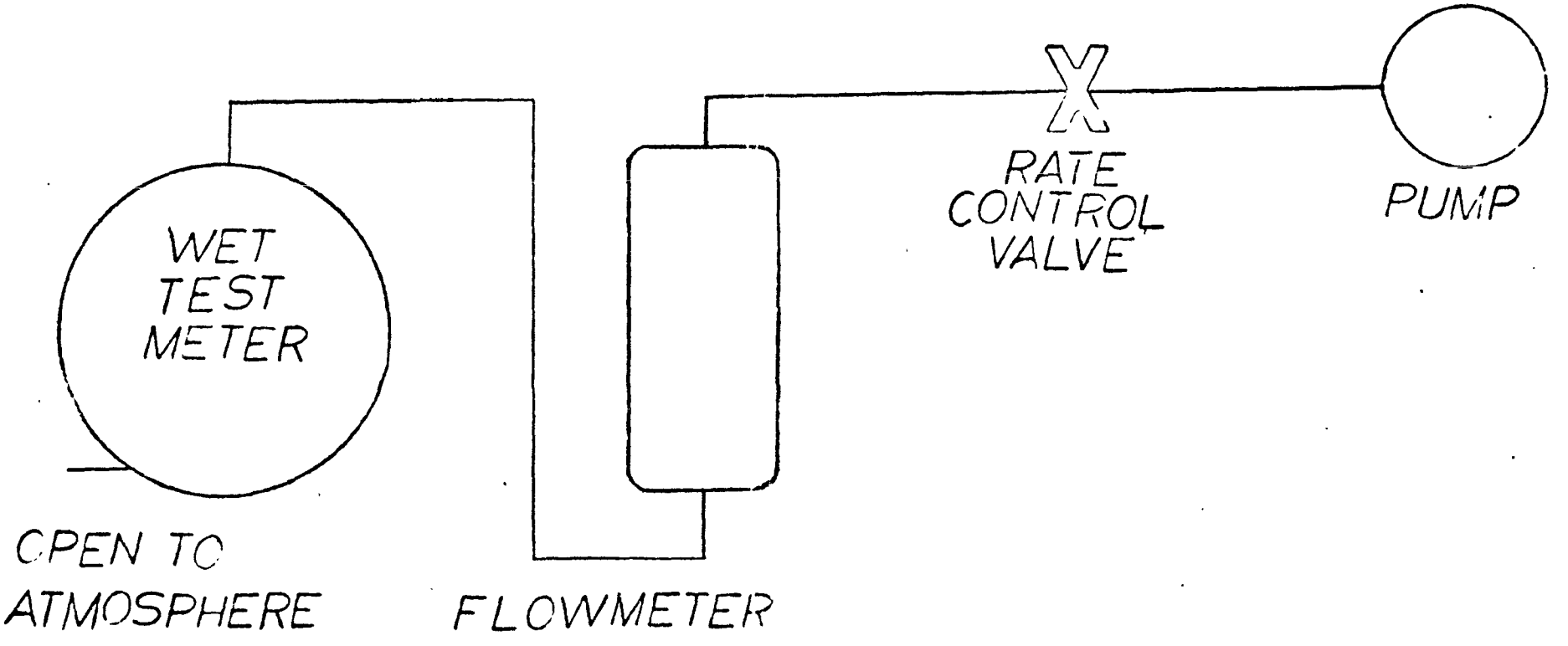

Figure A-2 - Calibration Setup of Flowmeter

APPENDIX B

DATA ON THE PERMEATION TUBES USED AS THE SOURCE OF THE SPIKED LEVELS OF NO_2

As shown in Figure 6 of the text (p. 16), there were four branches to the NO_2 permeation tube assembly. Each branch contained a set of permeation tubes as follows:

Branch	Permeation Tube Number	Rate of NO_2 (µg/min)	± 1S (µg/min)	Branch NO_2* (µg/min)
1	35-8	1.434	0.001	--
1	35-16	1.597	0.002	--
1	29-3	1.345	0.002	--
1	28-10	1.160	0.002	--
1				5.536
2	34-3	1.195	0.002	--
2	34-13	1.275	0.002	--
2	34-6	1.548	0.001	--
2	34-1	1.226	0.003	--
2	34-10	1.138	0.001	--
2				6.382
3	35-13	1.990	0.003	--
3	29-4	1.210	0.001	--
3				3.200
4	29-2	1.210	0.001	--
4	34-12	1.770	0.002	--
4				2.980

Permeation rates for the above tubes were determined by the National Bureau of Standards and validated by the Methods Standardization Branch (MSB) of EPA at 25.1°C before they were given to MRI for use on the collaborative test.

The combinations of branches used for the four runs of the sodium-arsenite collaborative test are:

Run No.	Date	Branches Used
1	February 4-5	1, 2, 3, and 4
2	February 5-6	1
3	February 6-7	1 and 2
4	February 7-8	3

* The sum of the NO_2 generated by each permeation tube in the branch.

APPENDIX C

CALIBRATION OF THE VENTURI AND DRY-GAS METER

The venturi and dry-gas meter were calibrated using a 1.0-ft^3/rev., wet-test meter, as shown in Figure 9 (p. 20 of text). The wet-test meter is connected between the splitter and the dry-gas meter. A bubbler is used before the wet-test meter to saturate the air with water. The air flow then proceeds through the venturi to the NO_2 bleed-in as it does in normal operation (see Figure 3, p. 9 of text).

Since the saturated air coming from the wet-test meter is not dried before going into the dry-gas meter, no correction for water vapor pressure is necessary and only the normal corrections for temperature and pressure are used. The flowrate of the wet-test meter (to stp) is:

$$\text{Flow}_{stp} = \text{Flow (meter reading)} \times \frac{P}{760} \times \frac{294}{T}$$

where T = temperature of wet-test meter + 273, and
$P = P_{atm}$ + pressure of test meter manometer.

The venturi flowrate is dependent on both temperature and pressure. Therefore Flow_{stp} is corrected to venturi conditions

$$\text{Flow}_{venturi} = \text{Flow}_{stp} \times \frac{760}{P_2} \times \frac{T_2}{294}$$

where T_2 = temperature of gas stream + 273, and
$P_2 = P_{atm} + P_{(gas\ stream)}$.

The dry-gas meter is temperature compensated, so only pressure corrections are made for its readings and a temperature base of 21°C is used for calibration. Thus the true flowrate of the dry-gas meter (F_m) is

$$F_m = \text{Flow}_{stp} \times \frac{760}{P_3}$$

where $P_3 = P_{atm} + P_{(gas\ stream)}$.

The correction factor f to convert f_m, measured dry-gas meter flowrate, to true flowrate is then

$$f = \frac{F_m}{f_m} .$$

The venturi and dry-gas meter were calibrated at three flowrates; 50, 55, and 60 ℓ/min. Normal system flowrates are 55-60 ℓ/min. The calibration factor for the dry-gas meter is constant at the calibration flows ($\pm$ 0.2%). The average value of flow from seven determinations is used in calculating true flowrates of the system. The plot of venturi ΔP vs flowrate follows a straight line over the range used in calibration. From the slope and intercept of the line flowrates were calculated.

APPENDIX D

WRITTEN COMMUNICATIONS WITH
POTENTIAL COLLABORATORS

Dear Sir:

Your name has been given to Midwest Research Institute (MRI) by the Environmental Protection Agency (EPA), as having expressed an interest in becoming a voluntary collaborator in an NO_2 Testing Program, to be sponsored by EPA. I am writing to confirm this expression of interest by your organization.

The objective of this program is to determine the reliability and bias of four methods for measuring NO_2-ambient air. MRI has the responsibilities for organizing the program, furnishing the test facilities, coordinating the testing, analyzing the results of the collaborators, and reporting the findings to EPA.

The sodium-arsenite method--the first method to be evaluated--will be tested in Kansas City, Missouri, during the first part of January 1974. Ten collaborators are needed for each of the four methods. A tentative test schedule of the other three methods is given on the attached "Collaborator Form."

A writeup of the sodium-arsenite method is enclosed, and provides the information needed for a collaborator to perform the testing and analyze the samples he takes.

Each collaborator organization, once chosen, will be reimbursed for travel, subsistence, lodging, and miscellaneous expenses (e.g., shipment of equipment and local travel), for the employee sent to Kansas City to perform the testing. Each collaborator will need to furnish the sampling apparatus called for in the writeup. For each of the two manual methods, sodium-arsenite and TGS-ANSA, six sampling trains will be needed. Cases will be furnished in which to ship field samples to the collaborator's laboratory for analysis.

We would appreciate your completing and returning to us the Collaborator Form before November 15.

Sincerely,

Paul C. Constant, Jr., Head
Environmental Measurements Section

Enclosures: (1) Collaborator Form
(2) Tentative Method for the Determination of Nitrogen Dioxide in the Atmosphere (Sodium-Arsenite Method)

COLLABORATOR FORM

1. Methods to Test (Check the ones in which you want to participate as a collaborator):

☐ Sodium Arsenite ☐ TGS-ANSA Procedure

☐ Continuous Saltzman ☐ Chemiluminescent

2. Equipment Available for Test:

Could you furnish six trains for:

Sodium Arsenite: ☐ yes ☐ no

TGS-ANSA: ☐ yes ☐ no

Have you a Colorimetric (Continuous Saltzman) Ambient NO_2 Monitor?

☐ yes ☐ no Make _____ Model _____

Have you a Chemiluminescent Ambient NO_2 Monitor that you would use?

☐ yes ☐ no Make _____ Model _____

3. Test Period (Each Method):

Period acceptable (calendar days):

☐ 6 days ☐ 10 days ☐ 13 days

4. Methods You Have Used:

☐ Sodium Arsenite, ☐ TGS-ANSA, ☐ Continuous Saltzman,

☐ Chemiluminescent, ☐ Others: _____

_____

_____

5. Remarks: _____

_____

_____

_____

_____

6. Company: _____

Address: _____

Person to Contact: _____

Telephone Number: _____

APPENDIX E

INSTRUCTIONS FOR COLLABORATORS
NO_2 COLLABORATIVE TEST:
SODIUM-ARSENITE METHOD

INSTRUCTIONS FOR COLLABORATORS

NO_2 COLLABORATIVE TEST: SODIUM-ARSENITE METHOD

GENERAL INFORMATION

1. Calibration, sampling, analysis, etc. should be done explicitly as stated in the November 1973 write-up furnished you on "Tentative Method for the Determination of Nitrogen Dioxide in the Atmosphere (Sodium Arsenite Procedure)."

2. Each collaborator will have an area and a set of sampling ports at both the spiked-sampling-manifold table and at the unspiked table--see accompanying figure and table below:

Collaborator		Spiked Table		Unspiked Table	
I.D.	Name	Area	Ports	Area	Ports
1	Kenneth Smith	1	1-4	1	41-44
2	Diana Dunker	2	5-8	2	37-40
3	James Ward	3	9-12	3	33-36
4	Bob Deardorff	4	13-16	4	29-32
5	Fernando Martinez	5	17-20	5	25-28
6	Glenn Smith	6	25-28	6	17-20
7	Abe Moore	7	29-32	7	13-16
8	Donald Kutys	8	33-36	8	9-12
9	Lynn Hutchinson	9	37-40	9	5-8
10	Jon Cimmer	10	41-44	10	1-4

3. For each run each collaborator will have six sampling trains running simultaneously: four in his area on the spiked table and two in his area on the unspiked table. Each train is to be attached to a separate port as specified in the above table.

4. Nitrogen Dioxide Data Sheets will be provided--a copy of one is attached. All information on sampling should be filled in during the period of the run. The bubbler identification number will be made by MRI's laboratory supervisor. He will have labels to affix to your samples. The coding is run number (1-4), followed by port number (1-45), followed by sampling table designation (S or U for spiked or unspiked), and terminated in collaborator number (1-10); e.g., 1-6-S-2 for run 1, port 6, spiked table

and collaborator 2 (Diana Dunker of Kentucky Division of Air Pollution). Analysis information is to be filled in at your home laboratory.

5. A copy of the data sheet for each run should be given to MRI's laboratory supervisor after each run is done.

6. Each collaborator should work independently of each other collaborator.

7. Shipping containers for the samples (absorbing tubes) will be available on a loan basis.

8. On the spiked sampling table, a separate power circuit (110-V, 60-cycle, four-outlet strip) is to be used by each collaborator for his four trains. On the unspiked line one strip will be shared by two collaborators. These strips are under the table tops near the periphery of the tops.

9. MRI will provide each collaborator with two standard samples (each of a different level of NO_2). This will raise the total number of samples to be analyzed by each collaborator to 26: six from each of four runs plus the two standard samples.

10. Each collaborator should analyze his samples at his home laboratory according to the tentative method write-up identified in Item 1 above. Results should be recorded on the Nitrogen Dioxide Data Sheets used in the field.

11. A copy of the completed data sheet on each sample as well as all calibration data and a complete description of the rotometer and wet-test meter used must be furnished MRI. All this information is needed by MRI within 1 month after completion of the field test.

TEST INSTRUCTIONS

1. Prepare your six sampling trains. Place four in your area on the spiked sampling table and two in your area on the unspiked sampling table.

2. Prepare a data sheet for each sampling train.

3. Upon notification of "Start testing," from the MRI laboratory supervisor, connect your trains to the proper ports and start your sampling according to the procedure in the November 1973 write-up on "Tentative

Method for Determination of Nitrogen Dioxide in the Atmosphere (Sodium Arsenite Procedure)."

4. Upon notification, "Stop testing," from the MRI laboratory supervisor, terminate test according to the procedure in the method write-up.

NOTES

MRI DERAMUS FIELD STATION - K.C. MO.

NITROGEN DIOXIDE DATA SHEET - SODIUM ARSENITE METHOD

Sampling

Collaborator _____ Run Number _____

Sampled by _____ Sampling Port Number _____

Sampling Train No. _____

Bubbler Identification No. _____

Rotameter Description (make, model, etc.,) _____

_____

Rotameter reading at start _____ at finish _____ type of ball _____

Start:Date _____ Time _____ Finish:Date _____ Time _____

Sampling duration (min) _____ Sample flow rate (cm^3/min) _____

Total air volume sampled (m^3) _____

Remarks:

Analysis

Date of Analysis _____

Analyzed by: Person _____ Organization _____

Standardization plot slope (absorbance units/µg NO_2/ml)_____

Absorbance of sample against blank (540 nm) _____ Aliquot (ml) _____

NO_2 Concentration (µg/m^3) _____

Remarks:

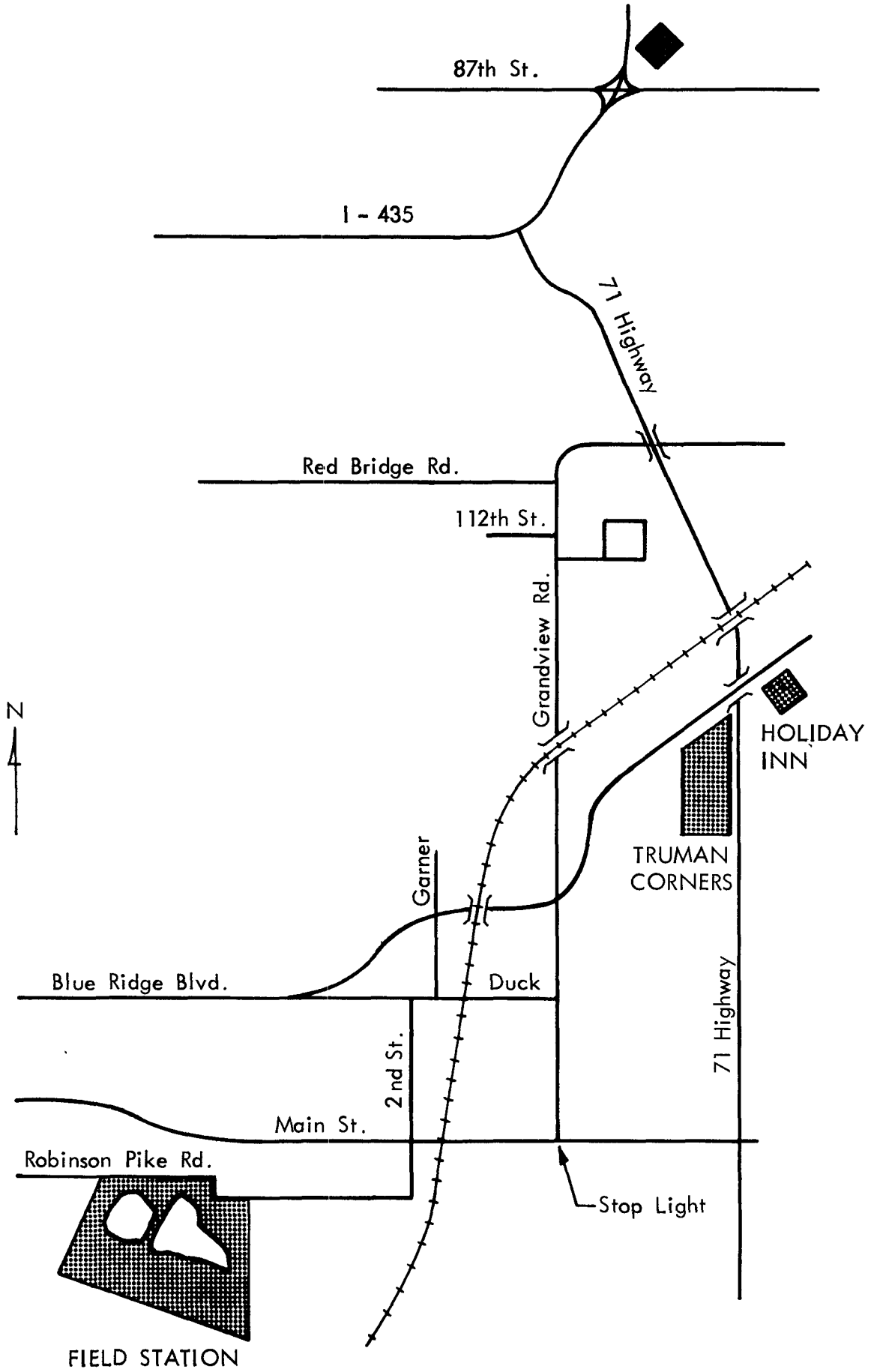
87th St.
I - 435
71 Highway
Red Bridge Rd.
112th St.
Grandview Rd.
N
HOLIDAY INN
TRUMAN CORNERS
Garner
Blue Ridge Blvd.
Duck
2nd St.
71 Highway
Main St.
Robinson Pike Rd.
Stop Light
FIELD STATION

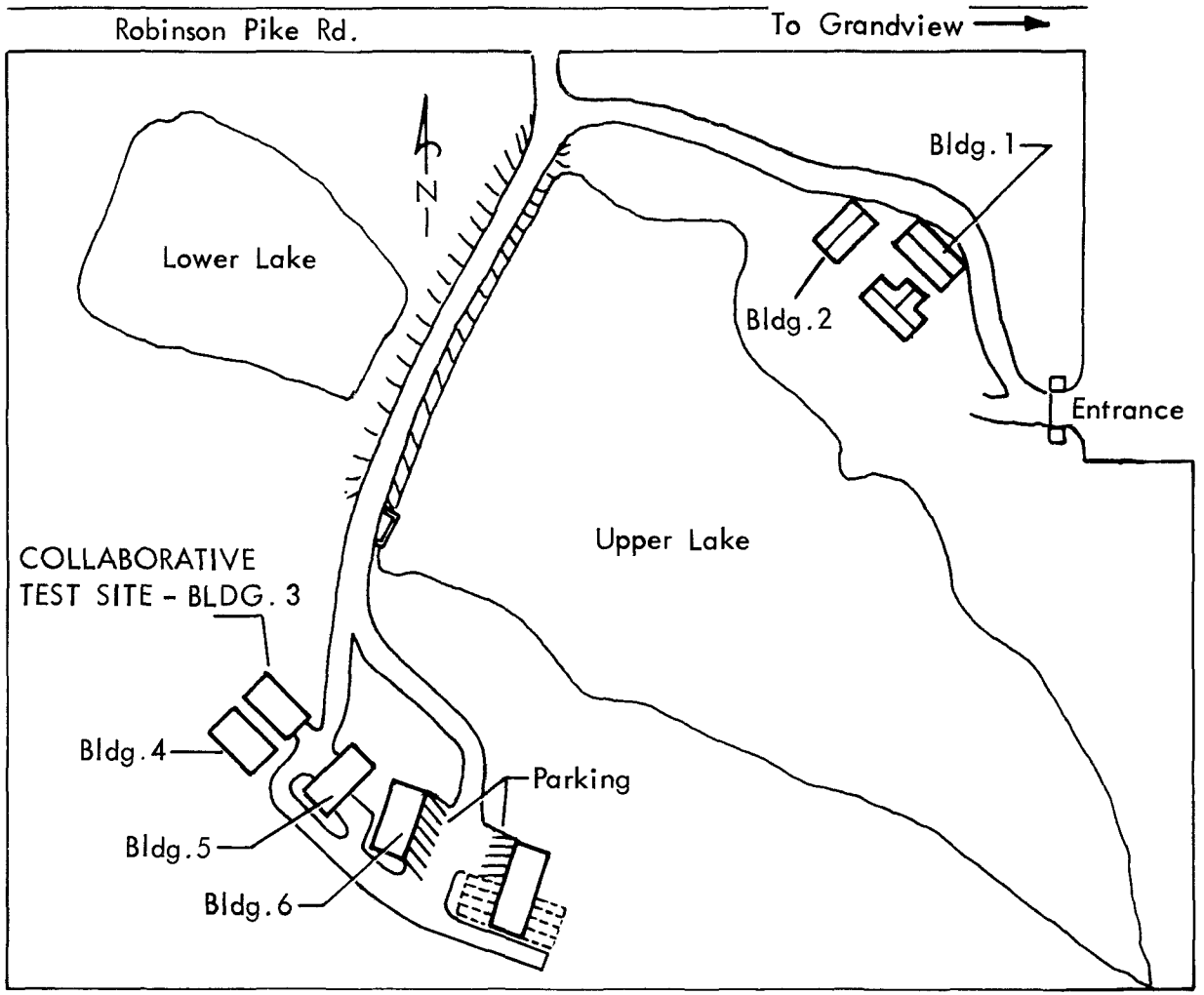

DERAMUS FIELD STATION
MIDWEST RESEARCH INSTITUTE
GRANDVIEW, MISSOURI

APPENDIX F

NO_2, AMBIENT-AIR SAMPLING SYSTEM OPERATIONAL DATA: TEST LOG SHEETS

TABLE F-I

RUN NO. 1 - OPERATIONAL DATA AND INFORMATION ON AMBIENT CONDITIONS AT TEST SITE

	NO_2 Sampling System Data							Calculated Flow Rates and Spike Levels					Ambient Conditions					
								Flow Rate		Average Flow Rate								
Date Time	Room Temp. (°C)	Bar. Press. (mm Hg)	Flow Press. (mm Hg)	Flow Rate Meter (ℓ/min)	Venturi Pressure Reading (mm H_2O)	N_2 Carrier Flow Rate (cc/min)	Permeation Tube Temp. (°C)	Venturi to 21° + 760 mm Hg (ℓ/min)	Meter to 21° + 760 mm Hg (ℓ/min)	to 21° + 760 mm Hg (ℓ/min)	Ambient[a] (ℓ/min)	Spike Level Ambient[a] ($\mu g/m^3$)	NO Background ($\mu g/m^3$)	NO_2 Background ($\mu g/m^3$)	Outdoor Temp. (°C)	Wind Speed (m/sec)	Wind Direction	Relative Humidity (%)
2-4-74																		
1200	22	744	8	58.0	264	800	25.1	59.2	58.6	58.9	60.4	296	10	10	-4.5	5	E	88
1300	22	743	8	57.2	259	800	25.1	58.5	57.7	58.1	59.7	299	10	20	-2	6	SE	60
1400	22	742	8	57.4	256	800	25.1	58.1	57.8	58.0	59.6	300	10	20	0	8	E	60
1500	22	741	8	56.9	253	800	25.1	57.7	57.3	57.5	59.1	302	10	30	1	5-8	SE	70
1600	22	739	8	57.0	255	800	25.1	57.7	57.2	57.5	59.3	301	10	20	2	7	E	62
1700	22	738	8	58.6	264	800	25.1	56.8	58.7	58.7	60.7	294	10	20	3	4	E	64
1800	22	737	8	56.3	255	800	25.1	57.6	56.3	57.0	58.9	303	10	30	3	3	E	81
1900	22	736	8	56.5	252	800	25.1	57.1	56.5	56.8	58.9	303	10	50	1.5	3	E	85
2000	22	736	8	57.4	252	800	25.1	57.1	57.4	57.3	59.3	301	10	40	1	4	E	80
2100	22	735	8	58.2	264	800	25.1	58.5	58.1	58.3	60.5	295	10	40	1.5	4	E	81
2200	22	734	8	59.9	264	800	25.1	58.4	59.7	59.1	61.4	291	10	40	1.5	7	E	81
2300	22	734	8	57.6	262	800	25.1	58.2	57.4	57.8	60.1	297	10	30	1	4	E	81
2400	22	733	8	58.0	266	800	25.1	58.6	57.7	58.2	60.5	295	10	40	1	4	E	81
2-5-74																		
0100	22	733	8	57.8	267	800	25.1	58.7	57.5	58.1	60.5	295	10	30	2.5	< 2	S	91
0200	22	733	8	58.2	267	800	25.1	58.7	57.9	58.3	60.7	294	10	30	1.5	4	SE	90
0300	22	733	8	57.2	258	800	25.1	57.6	56.9	57.3	59.6	300	10	25	6	3	S	63
0400	22.5	733	8	58.0	263	800	25.1	58.1	57.7	57.9	60.4	296	10	20	6.5	4	S	63
0500	22.5	732	8	57.2	260	800	25.1	57.7	56.9	57.3	59.8	299	10	20	6.5	< 4	S	63
0600	22.5	732	8	57.2	260	800	25.1	57.7	56.9	57.3	59.8	299	10	20	6.5	4	S	63
0700	22.5	731	8	57.0	255	800	25.1	57.0	56.6	56.8	59.4	301	10	20	5.5	< 4	S	76
0800	22.5	731	8	56.9	252	800	25.15	56.7	56.5	56.6	59.1	302	10	30	6	4	S	85
0900	23	731	8	57.2	255	800	25.15	56.9	56.8	56.9	59.5	300	10	30	6.5	2	SE	70
1000	23	731	8	57.2	257	800	25.1	57.2	56.8	57.0	59.6	299	10	30	9.5	5	S	59
1100	23	730	8	56.9	252	800	25.1	56.5	56.4	56.5	59.2	302	10	20	10.5	8	S	57
1149	23	730	8	57.0	257	800	25.1	57.1	56.5	56.8	59.5	300	10	20	12	11-14	S	45
							Average	57.8	57.4	57.6	59.8	299	10	25	-	-	-	-

a/ Temperature and pressure at sampling ports.

TABLE F-II

RUN NO. 2 - OPERATIONAL DATA AND INFORMATION ON AMBIENT CONDITIONS AT TEST SITE

	NO_2 Sampling System Data							Calculated Flow Rates and Spike Levels					Ambient Conditions					
								Flow Rate		Average Flow Rate								
Date Time	Room Temp. (°C)	Bar. Press. (mm Hg)	Flow Press. (mm Hg)	Flow Rate Meter (ℓ/min)	Venturi Pressure Reading (mm H_2O)	N_2 Carrier Flow Rate (cc/min)	Permeation Tube Temp. (°C)	Venturi to 21° + 760 mm Hg (ℓ/min)	Meter to 21° + 760 mm Hg (ℓ/min)	to 21° + 760 mm Hg (ℓ/min)	Ambient[a] (ℓ/min)	Spike Level Ambient[a] ($\mu g/m^3$)	NO Background ($\mu g/m^3$)	NO_2 Background ($\mu g/m^3$)	Outdoor Temp. (°C)	Wind Speed (m/sec)	Wind Direction	Relative Humidity (%)
2-5-74																		
1229	22	730	8	57.2	260	200	25.2	57.6	56.7	57.2	59.7	92.4	10	20	13.0	8-11	SSW	20
1330	22	730	8	57.6	261	200	25.2	57.8	57.1	57.4	60.0	92.0	10	20	13.5	5-8	S	32
1430	22	729	8	57.8	259	200	25.2	57.4	57.2	57.3	60.0	92.0	10	20	14.5	7-9	S	45
1530	23	729	8	58.2	266	200	25.2	58.1	57.6	57.9	60.7	90.9	10	20	14.5	4-5	S	59
1630	23	729	8	58.8	273	200	25.2	58.9	58.2	58.6	61.5	89.8	10	20	14.6	4	S	63
1730	24	729	8	58.6	269	200	25.2	58.3	58.0	58.1	61.2	90.1	10	20	13.5	< 2	S	59
1830	23	729	8	58.0	265	200	25.2	58.0	57.4	57.7	60.6	91.1	10	30	12.5	< 2	S	69
1930	23	729	8	57.6	267	200	25.2	58.2	57.0	57.6	66.5	91.2	10	30	11.5	< 2	S	69
2-5-74																		
2030	23	730	8	59.4	277	200	25.2	59 5	58.9	59.2	62.0	88.9	10	30	11.5	< 2	SE	63
2130	23	730	8	59.0	275	200	25.2	59.2	58.5	58.9	61.7	89.4	5	40	11.0	< 2	E	75
2230	23	730	8	59.2	273	200	25.1	59.0	58.7	58.8	61.7	89.5	10	40	5.0	7	N	100
2330	22	731	8	58.6	275	200	25.1	59.5	58.2	58.9	61.4	89.9	10	40	4.0	10	N	100
2-6-74																		
0030	22	731	8	59.6	276	200	25.1	59.6	59.2	59.4	62.0	89.0	10	40	3.0	4	N	100
0130	22	731	8	59.2	276	200	25.1	59.6	58.8	59.2	61.8	89.3	10	40	2.0	5	N	100
0230	22	731	8	58.0	266	200	25.1	58.4	57.6	58.0	60.5	91.2	10	40	-1.0	5	N	b/
0330	22	732	8	59.0	269	200	25.1	58.9	58.7	58.8	61.2	90.1	10	40	-1.5	10	N	b/
0430	22	733	8	59.2	265	200	25.05	58.5	58 9	58.7	61.1	90.3	5	40	-2.5	8	N	b/
0530	22	733	8	57.8	263	200	25.02	58.2	57.5	57.9	60.2	91.6	10	55	-3.0	11	N	b/
0630	22	734	8	57.4	258	200	25.0	57.7	57.2	57.5	59.7	92.4	10	60	-3.0	8	N	b/
0730	21.5	735	8	57.4	253	200	25.0	57.3	57.3	57.3	59.3	93.0	10	55	-3.0	12	NE	b/
0830	22	737	8	57.2	255	200	25.05	57.6	57.2	57.4	59.4	92.9	10	45	-3.5	7-11	N	b/
0930	22	738	8	57.6	260	200	25.1	58 3	57.9	58.1	60.0	91.9	10	50	-4.0	6-8	NW	b/
1030	22	739	8	57.6	259	200	25.1	58.2	57.8	58.0	59.9	92.2	10	45	4.5	8-12	NW	b/
1130	22	739	8	58.0	264	200	25.1	58.8	58.2	58 5	60.4	91.4	10	40	-5.5	8-12	NNW	b/
1230	22	740	8	58.4	266	200	25.1	59 2	58.7	58.9	60.7	90.9	20	50	-5.0	7-11	NW	b/
							Average	58.5	57.9	58.2	60.7	90 9	10	35	--	--	--	--

a/ Temperature and pressure at sampling ports

b/ Subfreezing temperatures prevented readings with wet/dry bulb thermometer.

TABLE F-III

RUN NO. 3 - OPERATIONAL DATA AND INFORMATION ON AMBIENT CONDITIONS AT TEST SITE

	NO_2 Sampling System Data							Calculated Flow Rates and Spike Levels					Ambient Conditions					
								Flow Rate										
Date Time	Room Temp. (°C)	Bar. Press. (mm Hg)	Flow Press. (mm Hg)	Flow Rate Meter (ℓ/min)	Venturi Pressure Reading (mm H_2O)	N_2 Carrier Flow Rate (cc/min)	Permeation Tube Temp. (°C)	Venturi to 21° + 760 mm Hg (ℓ/min)	Meter to 21° + 760 mm Hg (ℓ/min)	Average Flow Rate to 21° + 760 mm Hg (ℓ/min)	Ambient[a] (ℓ/min)	Spike Level Ambient[a] ($\mu g/m^3$)	NO Background ($\mu g/m^3$)	NO_2 Background ($\mu g/m^3$)	Outdoor Temp. (°C)	Wind Speed (m/sec)	Wind Direction	Relative Humidity (%)
2-6-74																		
1302	22	740	8	57.8	267	400	25.05	59.3	58.1	58.7	60.5	195.8	20	50	-5	7-9	NW	[b]
1400	22	740	8	57.8	267	400	25.1	59.3	58.1	58.7	60.5	195.8	20	50	-3	4-7	NW	[b]
1500	22	740	8	57.8	265	400	25.1	59.0	58.1	58.6	60.3	196.2	10	40	-3	8-11	NW	[b]
1600	22	741	8	58.4	268	400	25.1	59.5	58.8	59.1	60.8	194.6	20	50	-3	2	NW	[b]
1700	22	741	8	58.6	268	400	25.1	59.5	59.0	59.2	60.9	194.3	10	40	-3	5	NW	[b]
1800	22	742	8	57.8	260	400	25.1	58.6	58.2	58.4	60.0	197.2	10	50	-4	7	NW	[b]
1900	22	742	8	57.2	256	400	25.1	58.1	57.6	57.9	59.5	199.1	10	40	-4	4	NW	[b]
2000	22	742	8	57.6	260	400	25.1	58.6	58.0	58.3	59.9	197.6	10	40	-4	4	NW	[b]
2100	22	742	8	57.8	266	400	25.1	59.3	58.2	58.8	60.4	196.0	10	40	-4	4	NW	[b]
2200	22	742	8	57.8	266	400	25.1	59.3	58.2	58.8	60.4	196.0	10	30	-4	5	NW	[b]
2300	22	742	8	58.0	268	400	25.1	59.6	58.4	59.0	60.6	195.3	10	30	-4	4	NW	[b]
2400	22	742	8	57.6	268	400	25.1	59.6	58.0	58.8	60.4	196.0	10	30	-5	5	NW	[b]
2-7-74																		
0100	22	742	8	57.8	268	400	25.1	59.6	58.2	58.9	60.5	195.6	10	40	-5	<2	NW	[b]
0200	22	742	8	58.6	272	400	25.1	60.0	59.0	59.5	61.2	193.5	10	40	-6	4	NW	[b]
0300	22	742	8	58.4	272	400	25.1	60.0	58.8	59.4	61.1	193.8	10	40	-6	<2	NW	[b]
0400	22	742	8	58.6	272	400	25.1	60.0	59.0	59.5	61.2	193.5	10	40	-6	<2	NW	[b]
0500	22	742	8	58.4	268	400	25.1	59.6	58.8	59.2	60.8	194.6	10	60	-7	<2	NW	[b]
0600	22	742	8	58.2	264	400	25.1	59.1	58.6	58.9	60.5	195.8	15	65	-8	<2	NW	[b]
0700	22	742	8	58.2	258	400	25.1	58.3	58.6	58.5	60.1	197.0	25	70	-9	4	NW	[b]
0800	22	742	8	58.0	256	400	25.1	58.1	58.4	58.3	59.9	197.7	95	70	-9	<2	NW	[b]
0900	22	743	8	56.7	251	400	25.1	57.6	57.2	57.4	58.9	201.0	110	80	-8	<2	NW	[b]
1000	22	743	8	56.7	250	400	25.1	57.4	57.2	57.3	58.8	201.2	50	70	-6	2-3	NW	[b]
1100	22	743	8	56.5	251	400	25.15	57.6	57.0	57.3	58.8	201.4	30	50	-4.5	4-7	NW	[b]
1200	22	743	8	56.7	257	400	25.15	58.3	57.2	57.8	59.3	199.8	20	50	-4.5	4-5	NW	[b]
1300	22.5	743	8	56.9	255	400	25.1	58.0	57.4	57.7	59.3	199.7	20	50	-4	5-8	NW	[b]
							Average	58.9	58.2	58.6	60.2	196.7	25	50	--	--	--	--

[a] Temperature and pressure at sampling ports.
[b] Subfreezing temperatures prevented readings with wet/dry bulb thermometer.

TABLE F-IV

RUN NO. 4 - OPERATIONAL DATA AND INFORMATION ON AMBIENT CONDITIONS AT TEST SITE

	NO_2 Sampling System Data							Calculated Flow Rates and Spike Levels					Ambient Conditions					
								Flow Rate										
Date Time	Room Temp. (°C)	Bar Press. (mm Hg)	Flow Press. (mm Hg)	Flow Rate Meter (ℓ/min)	Venturi Pressure Reading (mm H_2O)	N_2 Carrier Flow Rate (cc/min)	Permeation Tube Temp. (°C)	Venturi to 21° + 760 mm Hg (ℓ/min)	Meter to 21° + 760 mm Hg (ℓ/min)	Average Flow Rate to 21° + 760 mm Hg (ℓ/min)	Average Flow Rate Ambient[a] (ℓ/min)	Spike Level Ambient[a] ($\mu g/m^3$)	NO Background ($\mu g/m^3$)	NO_2 Background ($\mu g/m^3$)	door Temp. (°C)	Wind Speed (m/sec)	Wind Direction	Relative Humidity (%)
2-7-74																		
1330	22.5	742	8	56.9	259	200	25.2	58.4	57.3	57.8	60.0	53.6	20	40	-4.5	4-5	NW	[b]
1430	22.5	742	8	57.2	259	200	25.2	58.4	57.6	58.0	59.7	53.4	20	40	-4	5-6	NW	[b]
1530	22	742	8	58.0	259	200	25.2	58.5	58.4	58.5	60.1	53.1	20	40	-4	4	NW	[b]
1630	22	742	8	57.2	256	200	25.2	58.1	57.5	57.9	59.5	53.6	20	50	-4	4	NW	[b]
1730	22	742	8	55.9	244	200	25.1	56.6	56.3	56.5	58.0	54.9	20	40	-4	5	NW	[b]
1830	22	742	8	55.0	236	200	25.1	55.7	55.4	55.5	57.1	55.9	20	50	-5	4	NW	[b]
1930	22	742	8	55.2	238	200	25.1	55.9	55.6	55.8	57.3	55.6	10	40	-5	5	NW	[b]
2030	22	742	8	55.7	244	200	25.1	56.6	56.1	56.4	57.9	55.0	10	30	-6	< 2	NW	[b]
2130	22	742	8	56.7	251	200	25.1	57.5	57.1	57.3	58.9	54.1	10	30	-6	< 2	NW	[b]
2230	22	742	8	57.0	256	200	25.1	58.1	57.4	57.8	59.4	53.7	20	60	-6	< 2	NW	[b]
2330	22	742	8	57.2	257	200	25.1	58.2	57.6	57.9	59.5	53.6	20	70	-5	< 2	NW	[b]
2-8-74																		
0030	22	742	8	56.9	253	200	25.1	57.7	57.3	57.5	59.1	53.9	20	40	-5	4	NW	[b]
0130	22	742	8	56.7	253	200	25.1	57.7	57.1	57.4	59.0	54.0	20	40	-6	5	NW	[b]
0230	22	742	8	57.2	257	200	25.1	58.2	57.6	57.9	59.5	43.6	20	35	-6.5	3	NW	[b]
0330	22	742	8	56.9	253	200	25.1	57.7	57.3	57.5	59.1	53.9	20	40	-8.5	< 2	NW	[b]
0430	22	742	8	57.0	256	200	25.1	58.1	52.4	57.8	59.4	53.7	20	50	-9	< 2	NW	[b]
0530	22	742	8	56.3	250	200	25.1	57.4	56.7	57.0	58.6	54.4	20	45	-10	5	NW	[b]
0630	22	742	8	55.2	244	200	25.1	56.6	55.6	56.1	57.7	55.3	20	35	-10.5	< 2	NW	[b]
0730	22	742	8	55.6	244	200	25.1	56.6	56.0	56.3	57.9	55.1	20	50	-10.5	< 2	NW	[b]
0830	22.5	742	8	55.4	242	200	25.1	56.3	55.8	56.1	57.7	55.3	30	70	-9	< 2	NW	[b]
0930	22	742	8	54.8	242	200	25.2	56.4	55.2	55.8	57.4	55.6	60	80	-7	< 2	NW	[b]
1030	22.5	742	8	54.8	238	200	25.2	55.8	55.2	55.5	57.1	55.8	30	50	-5	< 2	NW	[b]
1130	22.5	742	8	55.0	238	200	25.2	55.8	55.4	55.6	57.3	55.7	20	30	-5	< 2	NW	[b]
1230	22.5	742	8	56.1	246	200	25.2	56.8	56.5	56.7	58.3	54.7	20	30	-4	3-4	NW	[b]
1330	22.5	742	8	56.3	246	200	25.2	56.8	56.7	56.8	58.4	54.6	20	20	-4	3-5	NW	[b]
							Average	57.2	56.6	56.9	58.6	54.5	20	45	--	--	--	--

[a] Temperature and pressure at sampling ports.
[b] Subfreezing temperatures prevented readings with wet/dry bulb thermometer.

LOG SHEET Run 1

Side 1

	1	2	3	4	5	6	7	8	9	10	11	12	13	14	15	16	17	18	19	20	21	22	23	24	25
DATE	4 FEB.	———										→	4 FEB.	5 FEB.	———									→	5 FEB.
TIME	1200	1300	1400	1500	1600	1700	1800	1900	2000	2100	2200	2300	2400	0100	0200	0300	0400	0500	0600	0700	0800	0900	1000	1100	1149
OUTDOOR TEMP. °C	-4.5	-2	0	+1	2	3	3	1.5	1.0	1.5	1.5	1	1	2.5	1.5	6	6.5	6.5	6.5	5.5	6	6.5	9.5	10.5	12
BAR. PRESSURE IN.	30.27	30.22	30.18	30.15	30 07	30.02	30.00	29.98	29.95	29.93	29.90	29.98	29.86	29.86	29.85	29.84	29.83	29.80	29.80	29.78	29.77	29.78	29.75	29.73	29.71
REL. HUMIDITY dry/wet %	— 88	— 60	— 60	— 70	— 62	36 32 64	35 33 81	35 32 85	33 31 80	34 32 81	34 32 81	34 32 81	34 32 81	35 31 91	34 33 90	43 38 63	43 38 63	43 38 63	43 38 63	41 38 76	42 40 85	45 39 70	47 41 59	51 47 57	54 45 45
WIND SPEED MPH	1H12	14	17	12-19	15	10	7	7	10	10	15	15	10	<5	10	7	10	<10	10	<10	10	5	12	17	24-32
WIND DIRECTION	E	SE	E	SE	E	E	E	E	E	E	E	E	E	S	SE	S	S	S	S	S	S	SE	SSE	S	S
POWER LIGHTS	✓	✓	✓	✓	✓	✓	✓	✓	✓	✓	✓	✓	✓	✓	✓	✓	✓	✓	✓	✓	✓	✓	✓	✓	✓
LEAKS PERMEATION ASSEMBLY	✓	✓	✓	✓	✓	✓	✓	✓	✓	✓	✓	✓	✓	✓	✓	✓	✓	✓	✓	✓	✓	✓	✓	✓	✓
BATH TEMP. °C	25.1	25.1	25.1	25.1	25 1	25.1	25.1	25.1	25 1	25 1	25.1	25.1	25.1	25 1	25.1	25.1	25.1	25 1	25.1	25.1	25.1	25.1	25.1	25.1	25.1
ROTAMETER READINGS	—	—	—	—	—	—	—	—	—	—	—	—	—	—	—	—	—	—	—	—	—	—	—	—	—
1	99	99	99	99	99	99	99	99	99	99	99	99	99	99	99	99	99	99	99	99	98	98	98	98	98
2	99	99	99	99	99	99	99	99	99	99	99	99	99	99	99	99	99	99	99	99	98	98	98	98	98
3	98	98	98	98	98	98	98	98	98	98	98	98	98	98	98	98	98	98	98	98	97	97	97	97	97
4	98	98	98	98	98	98	98	98	98	98	98	98	98	98	98	98	98	98	98	98	98	98	97	98	98
N_2 PRESSURE	2000	2000	2000	2000	2000	2000	2000	2000	2000	1960	1950	1920	1910	1900	1895	1880	1870	1855	1840	1820	1800	1800	1750	1750	1750
RECORDER 1	—	—	—	—	—	—	—	—	—	SEE NOTE	—	—	—	—	—	—	—	—	—	—	—	—	—	—	—
PAPER	✓	✓	✓	✓	✓	✓	✓	✓	✓	✓	✓	✓	✓	✓	✓	✓	✓	✓	✓	✓	✓	✓	✓	✓	✓
OPERATION	✓	✓	✓	✓	✓	✓	✓	✓	✓	✓	✓	✓	✓	✓	✓	✓	✓	✓	✓	✓	✓	✓	✓	✓	✓
VOLTAGE 1 MV.	✓	✓	✓	✓	✓	✓	✓	✓	✓	✓	✓	✓	✓	✓	✓	✓	✓	✓	✓	✓	✓	✓	✓	✓	✓

LOG SHEET RUN 1

Side 2

	1	2	3	4	5	6	7	8	9	10	11	12	13	14	15	16	17	18	19	20	21	22	23	24	25
RECORDER 2	—	—	—	—	—	—	—	—	—	—	—	—	—	—	—	—	—	—	—	—	—	—	—	—	—
PAPER	✓	✓	✓	✓	✓	✓	✓	✓	✓	✓	✓	✓	✓	✓	✓	✓	✓	✓	✓	✓	✓	✓	✓	✓	✓
OPERATION	✓	✓	✓	✓	✓	✓	ERRATIC →	SAME	BETTER	SAME	WORSE	✓	✓	LITTLE NOISE	✓	✓	NOISY	✓	✓	✓	STABLE	✓	✓	✓	✓
VOLTAGE (.01) MV.	✓	✓	✓	✓	✓	✓	✓	✓	✓	✓	✓	✓	✓	✓	✓	✓	✓	✓	✓	✓	✓	✓	✓	✓	✓
RECORDER 3	—	—	—	—	—	—	—	—	—	—	—	—	—	—	—	—	—	—	—	—	—	—	—	—	—
PAPER	✓	✓	✓	✓	✓	✓	✓	✓	✓	✓	✓	✓	✓	✓	✓	✓	✓	✓	✓	✓	✓	✓	✓	✓	✓
OPERATION	✓	✓	✓	✓	✓	✓	✓	✓	✓	✓	✓	✓	✓	✓	✓	✓	✓	✓	✓	✓	✓	✓	✓	✓	✓
NO_2 ANALYZER	—	—	—	—	—	—	—	—	—	—	—	—	—	—	—	—	—	—	—	—	—	—	—	—	—
VAC. PRESSURE	26	26	26	26	25	25	25	25	25	25	25	25	25	25	25	25	25	25	25	25	25	25	25	25	25
O_2 PRESSURE	20	20	20	20	20	20	20	20	20	20	20	20	20	20	20	20	20	20	20	20	20	20	20	20	20
NO	3	4	4	4	4	4	4	4	4	4	4	4	4	4	4	4	4	4	4	4	4	4	4	4	4
NO_2	4	5	5	6	5	5	6	8	7	7	7	6	7	6	6	5.5	5	5	5	5	6	6	6	5	5
PAPER	✓	✓	✓	✓	✓	✓	✓	✓	✓	✓	✓	✓	✓	✓	✓	✓	✓	✓	✓	✓	✓	✓	✓	✓	✓
OPERATION	1208 1215	1308 1317	1405 1415	1509 1519	1600 1610	1700 1710	1800 1810	1900 1910	2005 2010	2106 2111	2200 2211	2300 2310	2400 2413	0100 0111	0200 0210	0300 0310	0400 0410	0500 0510	0600 0610	0700 0710	0807 0816	0904 0913	1006 1014	1105 1126	1149
VENTURI READING	540 276	537 278	535 279	534 281	535 280	539 275	535 280	533 281	533 281	539 275	539 275	538 276	540 274	541 274	541 274	536 278	539 276	537 277	537 277	535 280	533 281	535 280	535 280	535 278	535 278
READ GAS METER CF	435	546	669	798	932	048	292	300	428	521	659	771	901	026	142	266	383	518	635	748	887	018	129	246	332
GAS FLOW MANOMETER	459 344	459 344	458 345	457 345	458 344	458 344	458 345	458 345	458 345	460 343	460 343	459 344	460 343	460 344	460 343	460 344	459 343	459 343	459 343	458 344	458 345	458 344	458 343	457 344	457 344
INDOOR TEMP. °C	22	22	22	22	22	22	22	22	22	22	22	22	22	22	22	22	22.5	22.5	22.5	22.5	22.5	23	23	23	23
TIME GAS METER SEC.	29.3	29.7	29.6	29.9	29.8	29.0	30.2	30.1	29.6	29.2	28.4	29.5	29.3	29.4	29.2	29.7	29.3	29.7	29.8	29.9	29.7	29.7	29.9	29.9	29.8
S MANIFOLD	✓	✓	✓	✓	✓	✓	✓	✓	✓	✓	✓	✓	✓	✓	✓	✓	✓	✓	✓	✓	✓	✓	✓	✓	✓
U MANIFOLD	✓	✓	✓	✓	✓	✓	✓	✓	✓	✓	✓	✓	✓	✓	✓	✓	✓	✓	✓	✓	✓	✓	✓	✓	✓
INITIALS	JRL	JRL	JRL	GWS	GWS	DAC	DAC	DAC	DAC	DAC	DAC	DAC	DAC	EGL	EGL	EGL	EGL	EGL	EGL	EGL	GWS	GWS	JRL	JRL	JRL

LOG SHEET RUN 2

Side 1

	1	2	3	4	5	6	7	8	9	10	11	12	13	14	15	16	17	18	19	20	21	22	23	24	25
DATE	5 FEB.	—	—	—	—	—	—	—	—	—	→	5 FEB.	6 FEB.	—	—	—	—	—	—	—	—	—	—	→	6 FEB.
TIME	1229	1330	1430	1530	1630	1730	1830	1930	2030	2130	2230	2330	0030	0130	0230	0330	0430	0530	0630	0730	0830	0930	1030	1130	1230
OUTDOOR TEMP. °C	13	13.5	14.5	14.5	14.6	13.5	12.5	11.5	11.5	11.0 Rain	6.0 Rain	4 Rain	3 Rain	2	−1 Rain	−1.5	−2.5	−3	−3	−3	−3.5	−4 LT. SNOW	−4.5	−5.5	−5.5
BAR. PRESSURE IN.	29.72	29.71	29.68	29.68	29.68	29.68	29.68	29.68	29.72	29.72	29.76	29.76	29.76	29.77	29.78	29.82	29.84	29.86	29.90	29.91	30.00	30.02	30.06	30.09	30.12
REL. HUMIDITY dry/wet %	59 43 20	54 47 32	57 47 45	54 48 59	53 47 63	55 48 59	53 48 69	52 47 69	52 46 63	51 47 75	40 40 100	38 38 100	37 37 100	35 35 100	30 30 100	29 29 100	27 27 100	26 26 100	26 26 100	25 25 100	READINGS	NOT	TAKEN	—	
WIND SPEED MPH	18-24	12-17	15-18	8-12	8-10	<5	<5	<5	<5	<5	15	22	10	12	12	23	18	25	17	26	15-25	13-18	18-26	19-27	15-25
WIND DIRECTION	SSW	S	S	S	S	S	S	S	SE	E	N	N	N	N	N	N	N	N	N	NE	N	NW	NW	NNW	NW
POWER LIGHTS	✓	✓	✓	✓	✓	✓	✓	✓	✓	✓	✓	✓	✓	✓	✓	✓	✓	✓	✓	✓	✓	✓	✓	✓	✓
LEAKS PERMEATION ASSEMBLY	✓	✓	✓	✓	✓	✓	✓	✓	✓	✓	✓	✓	✓	✓	✓	✓	✓	✓	✓	✓	✓	✓	✓	✓	✓
BATH TEMP.	25.2	25.2	25.2	25.2	25.2	25.2	25.1	25.1	25.1	25.1	25.1	25.1	25.1	25.1	25.1	25.1	25.05	25.02	25.0	25.0	25.05	25.1	25.1	25.1	25.1
ROTAMETER READINGS	—	—	—	—	—	—	—	—	—	—	—	—	—	—	—	—	—	—	—	—	—	—	—	—	—
1	98	98	98	97.5	97.5	97.5	97.5	97.5	97.5	97.5	97.5	97.5	97.5	97.5	97.5	97.5	97.5	97.5	97.5	97.5	96	96.5	96	96	96
~~2~~	—	—	—	—	—	—	—	—	—	—	—	—	—	—	—	—	—	—	—	—	—	—	—	—	—
~~3~~	—	—	—	—	—	—	—	—	—	—	—	—	—	—	—	—	—	—	—	—	—	—	—	—	—
~~4~~	—	—	—	—	—	—	—	—	—	—	—	—	—	—	—	—	—	—	—	—	—	—	—	—	—
N_2 PRESSURE PSI	1700	1700	1700	1700	1680	1670	1650	1620	1610	1600	1590	1570	1550	1530	1510	1500	1490	1470	1450	1430	1410	1400	1400	1400	1380
RECORDER 1	—	—	—	—	—	—	—	—	—	—	—	—	—	—	—	—	—	—	—	—	—	—	—	—	—
PAPER	✓	✓	✓	✓	✓	✓	—	✓	✓	✓	✓	✓	✓	✓	✓	✓	✓	✓	✓	✓	✓	✓	✓	✓	✓
OPERATION	✓	✓	✓	✓	✓	✓	✓	✓	✓	✓	✓	✓	✓	✓	✓	✓	✓	✓	✓	✓	✓	✓	✓	✓	✓
VOLTAGE 1 MV.	✓	✓	✓	✓	✓	✓	✓	✓	✓	✓	✓	✓	✓	✓	✓	✓	✓	✓	✓	✓	✓	✓	✓	✓	✓

LOG SHEET Run 2

Side 2

	1	2	3	4	5	6	7	8	9	10	11	12	13	14	15	16	17	18	19	20	21	22	23	24	25
RECORDER 2	—	—	—	—	—	—	—	—	—	—	—	—	—	—	—	—	—	—	—	—	—	—	—	—	—
PAPER	✓	✓	✓	✓	✓	✓	✓	✓	✓	✓	✓	✓	✓	✓	✓	✓	✓	✓	✓	✓	✓	✓	✓	✓	✓
OPERATION	✓	✓	✓	✓	✓	✓	✓	✓	✓	✓	✓	✓	✓	✓	✓	✓	✓	✓	✓	✓	✓	✓	✓	✓	✓
VOLTAGE (.01) MV.	✓	✓	✓	✓	✓	✓	✓	✓	✓	✓	✓	✓	✓	✓	✓	✓	✓	✓	✓	✓	✓	✓	✓	✓	✓
RECORDER 3	—	—	—	—	—	—	—	—	—	—	—	—	—	—	—	—	—	—	—	—	—	—	—	—	—
PAPER	✓	✓	✓	✓	✓	✓	✓	✓	✓	✓	✓	✓	✓	✓	✓	✓	✓	✓	✓	✓	✓	✓	✓	✓	✓
OPERATION	✓	✓	✓	✓	✓	✓	✓	✓	✓	✓	✓	✓	✓	✓	✓	✓	✓	✓	✓	✓	✓	✓	✓	✓	✓
NO_2 ANALYZER	—	—	—	—	—	—	—	—	—	—	—	—	—	—	—	—	—	—	—	—	—	—	—	—	—
VAC. PRESSURE	25	25	25	25	25	25	25	25	25	25	25	25	25	25	25	25	25	25	25	25	25	25	25	25	25
O_2 PRESSURE	20	20	20	20	20	20	20	20	20	20	20	20	20	20	20	20	20	20	20	20	20	20	20	20	20
NO	4	4	4	4	4	4	4	4	4	3.5	4	4	4	4	4	4	3.5	4	4	4	4	4	4	4	5
NO_2	5	5	5	5	5	5	6	6	6	7	7	7	7	7	7	7	7	8.5	9	8.5	7.5	8	7.5	7	8
PAPER	✓	✓	✓	✓	✓	✓	✓	✓	✓	✓	✓	✓	✓	✓	✓	✓	✓	✓	✓	✓	✓	✓	✓	✓	✓
OPERATION	1239 1247	1330 1337	M31 1440	1531 1536	1630 1640	1730 1740	1830 1840	1930 1940	2030 2040	2130 2140	2230 2240	2330 2340	0030 0040	0130 0140	0230 0240	0330 0340	0432 0444	0530 0540	0630 0640	0730 0740	0833 0840	0936 0942	1032 1040	1137 1148	1220 —
VENTURI READING	537 277	538 277	537 277	540 274	543 270	541 272	539 274	540 273	545 268	544 269	543 270	544 269	545 269	545 269	540 274	541 272	539 274	538 275	536 278	533 280	534 279	536 276	536 277	538 274	539 273
READ GAS METER CF	412.5	543	664	786	917	045	162	293	411	549	674	794	923	043	174	305	422	543	667	787	926	041	156	399	409.7
GAS FLOW MANOMETER	458 343	458 343	458 344	459 341	460 341	460 341	459 342	459 342	460 341	460 341	460 341	460 341	460 341	460 341	459 342	460 341	459 342	459 342	343 458	456 344	457 344	458 343	458 343	458 342	458 342
INDOOR TEMP. °C	22	22	22	23	23	24	23	23	23	23	23	22	22	22	22	22	22	22	22	21.5	22	22	22	22	22
TIME GAS METER SEC.	29.7	29.5	29.4	29.2	28.9	29.0	29.3	29.5	28.6	28.8	28.7	29.0	28.5	28.7	29.3	28.8	28.7	29.4	29.6	29.6	29.7	29.4	29.5	29.3	29.1
S MANIFOLD	✓	✓	✓	✓	✓	✓	✓	✓	✓	✓	✓	✓	✓	✓	✓	✓	✓	✓	✓	✓	✓	✓	✓	✓	✓
U MANIFOLD	✓	✓	✓	✓	✓	✓	✓	✓	✓	✓	✓	✓	✓	✓	✓	✓	✓	✓	✓	✓	✓	✓	✓	✓	✓
INITIALS	JRL	JRL	JRL	JRL	DAC	DAC	DAC	DAC	DAC	DAC	DAC	DAC	EGC	EGC	EGC	EGC	EGC	EGC	EGC	EGC	GWS	JRL	JRL	JRL	JRL

LOG SHEET RUN 3

Side 1

	1	2	3	4	5	6	7	8	9	10	11	12	13	14	15	16	17	18	19	20	21	22	23	24	25
DATE	6 FEB	→									→	6 FEB.	7 FEB	→										→	7 FEB.
TIME	1302	1400	1500	1600	1700	1800	1900	2000	2100	2200	2300	2400	0100	0200	0300	0400	0500	0600	0700	0800	0900	1000	1100	1200	1302
OUTDOOR TEMP. °C	-5	-3	-3	-3	-4	-4	-4	-4	-4	-4	-4	-5	-5	-6	-6	-6	-7	-8	-9	-9	-8	LT. SNOW -6	-4.5	→ 4.5	→ -4
BAR. PRESSURE IN.	30.10	30.12	30.12	30.16	30.16	30.18	30.18	30.18	30.19	30.20	30.19	30.20	30.20	30.20	30.20	30.20	30.20	30.20	30.20	30.20	30.21	30.22	30.22	30.23	30.22
REL. HUMIDITY dry/wet %	<0°C	→			NO READINGS TAKEN																			<0°C	→
WIND SPEED MPH	16-21	9-15	17-24	5	12	15	10	8	10	12	8	12	<5	8	<5	<5	<5	10	<5	<5	2-5	8-15	10-12	13-15	12-18
WIND DIRECTION	NW	nw	nw	nw	nw	nw	nw	nw	nw	nw	nw	nw	nw	nw	nw	nw	nw	nw	nw	nw	nw	nw	nw	nw	nw
POWER LIGHTS	✓	✓	✓	✓	✓	✓	✓	✓	✓	✓	✓	✓	✓	✓	✓	✓	✓	✓	✓	✓	✓	✓	✓	✓	✓
LEAKS PERMEATION ASSEMBLY	✓	✓	✓	✓	✓	✓	✓	✓	✓	✓	✓	✓	✓	✓	✓	✓	✓	✓	✓	✓	✓	✓	✓	✓	✓
BATH TEMP.	25.05	25.1	25.1	25.1	25.1	25.1	25.1	25.1	25.1	25.1	25.1	25.1	25.1	25.1	25.1	25.1	25.1	25.1	25.1	25.1	25.1	25.1	25.1	25.1	25.1
ROTAMETER READINGS	✓	✓	✓	✓	✓	✓	✓	✓	✓	✓	✓	✓	✓	✓	✓	✓	✓	✓	✓	✓	✓	✓	✓	✓	✓
1	99.5	99	99	99	99	99	99	99	99	99	99	99	89	99	99	99	99	99	99	99	98	97.5	97.5	97.5	97.5
2	100	100	100	100	100	100	100	100	100	100	100	100	100	100	100	100	100	100	100	100	99	99	98.5	98.5	98.5
~~3~~	✓	✓	✓	✓	✓	✓	✓	✓	✓	✓	✓	✓	✓	✓	✓	✓	✓	✓	✓	✓	✓	✓	✓	✓	✓
~~4~~	✓	✓	✓	✓	✓	✓	✓	✓	✓	✓	✓	✓	✓	✓	✓	✓	✓	✓	✓	✓	✓	✓	✓	✓	✓
N_2 PRESSURE PSI	1370	1340	1320	1300	1290	1290	1270	1250	1230	1210	1200	1190	1180	1160	1140	1120	1100	1090	1080	1070	1050	1020	1000	1000	1000
RECORDER 1	✓	✓	✓	✓	✓	✓	✓	✓	✓	✓	✓	✓	✓	✓	✓	✓	✓	✓	✓	✓	✓	✓	✓	✓	✓
PAPER	✓	✓	✓	✓	✓	✓	✓	✓	✓	✓	✓	✓	✓	✓	✓	✓	✓	✓	✓	✓	✓	✓	✓	✓	✓
OPERATION	✓	✓	✓	✓	✓	✓	✓	✓	✓	✓	✓	✓	✓	✓	✓	✓	✓	✓	✓	✓	✓	✓	✓	✓	✓
VOLTAGE 1 MV.	✓	✓	✓	✓	✓	✓	✓	✓	✓	✓	✓	✓	✓	✓	✓	✓	✓	✓	✓	✓	✓	✓	✓	✓	✓

LOG SHEET Run 3

Side 2

	1	2	3	4	5	6	7	8	9	10	11	12	13	14	15	16	17	18	19	20	21	22	23	24	25
RECORDER 2	—	—	—	—	—	—	—	—	—	—	-	—	—	-	—	—	—	—	—	—	—	—	-	-	—
PAPER	✓	✓	✓	✓	✓	✓	✓	✓	✓	✓	✓	✓	✓	✓	✓	✓	✓	✓	✓	✓	✓	✓	✓	✓	✓
OPERATION	✓	✓	✓	✓	✓	✓	✓	✓	✓	✓	✓	✓	✓	✓	✓	✓	✓	✓	✓	✓	✓	✓	✓	✓	✓
VOLTAGE (.01) MV.	✓	✓	✓	✓	✓	✓	✓	✓	✓	✓	✓	✓	✓	✓	✓	✓	✓	✓	✓	✓	✓	✓	✓	✓	✓
RECORDER 3	—	—	—	—	-	—	-	—	-	—	—	—	—	-	—	-	—	—	—	-	—	—	-	-	—
PAPER	✓	✓	✓	✓	✓	✓	✓	✓	✓	✓	✓	✓	✓	✓	✓	✓	✓	✓	✓	✓	✓	✓	✓	✓	✓
OPERATION	✓	✓	✓	✓	✓	✓	✓	✓	✓	✓	✓	✓	✓	✓	✓	✓	✓	✓	✓	✓	✓	✓	✓	✓	✓
NO_2 ANALYZER	—	—	—	—	-	—	-	—	-	-	-	-	—	-	-	—	-	-	-	-	-	-	-	-	—
VAC. PRESSURE	25	25	25	25	25	25	25	25	25	25	25	25	25	25	25	25	25	25.5	25.5	25.5	26	26	26	26	26
O_2 PRESSURE	20	20	20	20	20	20	20	20	20	20	20	20	20	20	20	20	20	20	20	20	20	20	20	20	20
NO	5	5	4	5	4	4	4	4	4	4	4	4	4	4	4	4	4	4½	5½	12.5	14	8	6	5	5
NO_2	8	8	7	8	7	8	7	7	7	6	6	6	7	7	7	7	9	9.5	10	10	11	10	8	8	8
PAPER	✓	✓	✓	✓	✓	✓	✓	✓	✓	✓	✓	✓	✓	✓	✓	✓	✓	✓	✓	✓	✓	✓	✓	✓	✓
OPERATION	— 1310	1404 1442	1505 1510	1559 1607	1658 1708	1800 1810	1900 1910	2000 2010	2100 2108	2200 2210	2300 2310	2400 0007	0000 0105	0200 0206	0300 0306	0400 0406	0501 0512	0600 0605	0700 0705	0800 0809	0900 0909	1000 1007	1101 1109	1203 1310	1252 —
VENTURI READING	539 272	540 273	539 274	540 272	540 272	536 276	534 278	536 276	539 273	539 273	540 272	540 272	540 272	542 270	542 270	542 270	540 272	538 274	535 272	534 278	531 280	532 282	531 280	534 277	533 278
READ GAS METER CF	467.8	595	715	846	963	092	220	340	462	581	714	833	952	072	208	324	450	574	692	827	948	056	283	309	424.8
GAS FLOW MANOMETER	459 341	459 341	460 340	460 341	460 341	457 342	457 342	458 341	459 343	459 343	460 343	460 342	460 342	460 342	459 343	459 343	459 343	459 343	458 343	345 457	456 346	455 347	347 455	457 343	457 343
INDOOR TEMP. °C	22	22	22	22	22	22	22	22	22	22	22	22	22	22	22	22	22	22	22	22	22	22	22	22	22.5
TIME GAS METER SEC.	29.4	29.4	29.4	29.1	29.0	29.4	29.7	29.5	29.4	29.5	29.4	29.0	29.1	29.0	29.1	29.2	29.2	29.2	29.3	29.3	30.0	30.0	30.1	30.0	29.9
S MANIFOLD	✓	✓	✓	✓	✓	✓	✓	✓	✓	✓	✓	✓	✓	✓	✓	✓	✓	✓	✓	✓	✓	✓	✓	✓	✓
U MANIFOLD	✓	✓	✓	✓	✓	✓	✓	✓	✓	✓	✓	✓	✓	✓	✓	✓	✓	✓	✓	✓	✓	✓	✓	✓	✓
INITIALS	JRL	JRL	JRL	GWS	DAC	DAC	DAC	DAC	DAC	DAC	DAC	DAC	EGL	EGL	EGL	EGL	EGL	EGL	EGL	EGL	GWS	JRL	JRL	JRL	JRL

LOG SHEET RUN 4

Side 1

	1	2	3	4	5	6	7	8	9	10	11	12	13	14	15	16	17	18	19	20	21	22	23	24	25
DATE	7 FEB.	→								→	7 FEB.	8 FEB.	→										→		8 FEB.
TIME	1330	1430	1530	1630	1730	1830	1930	2030	2130	2230	2330	0030	0130	0230	0330	0430	0530	0630	0730	0830	0930	1030	1130	1230	1330
OUTDOOR TEMP. °C	← LIGHT SNOW → -4.5	-4	-4	-4	-4	-5	-5	-6	-6	-6	-5	-5	-6	-6.5	-8.5	-9	-10	-10.5	-10.5	-9	← LIGHT SNOW → -7	-5	-5	-4	-4
BAR. PRESSURE IN.	30.22	30.22	30.20	30.18	30.18	30.18	30.20	30.20	30.20	30.21	30.22	30.21	30.21	30.21	30.21	30.21	30.20	30.20	30.20	30.20	30.21	30.21	30.20	30.20	30.19
REL. HUMIDITY dry/wet %	<0°	CENTIGRADE - NO READINGS TAKEN						—		—		—				—				—				—	
WIND SPEED MPH	8-12	9-15	10	10	12	8	10	<5	<5	<5	<5	8	10	6	<5	<5	10	<5	<5	<5	<5	<5	<5	5-7	5-10
WIND DIRECTION	nw	nw	nw	nw	nw	nw	nw	nw	nw	nw	nw	nw	nw	nw	nw	nw	nw	nw	nw	nw	nw	nw	nw	nw	nw
POWER LIGHTS	✓	✓	✓	✓	✓	✓	✓	✓	✓	✓	✓	✓	✓	✓	✓	✓	✓	✓	✓	✓	✓	✓	✓	✓	✓
LEAKS PERMEATION ASSEMBLY	✓	✓	✓	✓	✓	✓	✓	✓	✓	✓	✓	✓	✓	✓	✓	✓	✓	✓	✓	✓	✓	✓	✓	✓	✓
BATH TEMP.	25.2	25.2	25.2	25.2	25.1	25.1	25.1	25.1	25.1	25.1	25.1	25.1	25.1	25.1	25.1	25.1	25.1	25.1	25.1	25.1	25.2	25.2	25.2	25.2	25.2
ROTAMETER READINGS	—	—	—	—	—	—	—	—	—	—	—	—	—	—	—	—	—	—	—	—	—	—	—	—	—
~~1~~	—	—	—	—	—	—	—	—	—	—	—	—	—	—	—	—	—	—	—	—	—	—	—	—	—
~~2~~	—	—	—	—	—	—	—	—	—	—	—	—	—	—	—	—	—	—	—	—	—	—	—	—	—
3	102	102	102	102	102	102	102	102	102	102	102	102	102	102	102	102	102	102	102	101	101	100.5	100.5	100	100.5
~~4~~	—	—	—	—	—	—	—	—	—	—	—	—	—	—	—	—	—	—	—	—	—	—	—	—	—
N_2 PRESSURE PSI	990	960	950	930	900	900	890	860	850	830	800	790	780	760	740	720	705	700	680	650	620	610	600	580	560
RECORDER 1	✓	✓	✓	✓	✓	✓	✓	✓	✓	✓	✓	✓	✓	✓	✓	✓	✓	✓	✓	✓	✓	✓	✓	✓	✓
PAPER	✓	✓	✓	✓	✓	✓	✓	✓	✓	✓	✓	✓	✓	✓	✓	✓	✓	✓	✓	✓	✓	✓	✓	✓	✓
OPERATION	✓	✓	✓	✓	✓	✓	✓	✓	✓	✓	✓	✓	✓	✓	✓	✓	✓	✓	✓	✓	✓	✓	✓	✓	✓
VOLTAGE 1 MV.	✓	✓	✓	✓	✓	✓	✓	✓	✓	✓	✓	✓	✓	✓	✓	✓	✓	✓	✓	✓	✓	✓	✓	✓	✓

LOG SHEET Run 4

Side 2

	1	2	3	4	5	6	7	8	9	10	11	12	13	14	15	16	17	18	19	20	21	22	23	24	25
RECORDER 2	—	—	—	—	—	—	—	—	—	—	—	—	—	—	—	—	—	—	—	—	—	—	—	—	—
PAPER	✓	✓	✓	✓	✓	✓	✓	✓	✓	✓	✓	✓	✓	✓	✓	✓	✓	✓	✓	✓	✓	✓	✓	✓	✓
OPERATION	✓	✓	✓	✓	✓	✓	✓	✓	✓	✓	✓	✓	✓	✓	✓	✓	✓	✓	✓	✓	✓	✓	✓	✓	✓
VOLTAGE (.01) MV.	✓	✓	✓	✓	✓	✓	✓	✓	✓	✓	✓	✓	✓	✓	✓	✓	✓	✓	✓	✓	✓	✓	✓	✓	✓
RECORDER 3	—	—	—	—	—	—	—	—	—	—	—	—	—	—	—	—	—	—	—	—	—	—	—	—	—
PAPER	✓	✓	✓	✓	✓	✓	✓	✓	✓	✓	✓	✓	✓	✓	✓	✓	✓	✓	✓	✓	✓	✓	✓	✓	✓
OPERATION	✓	✓	✓	✓	✓	✓	✓	✓	✓	✓	✓	✓	✓	✓	✓	✓	✓	✓	✓	✓	✓	✓	✓	✓	✓
NO_2 ANALYZER	—	—	—	—	—	—	—	—	—	—	—	—	—	—	—	—	—	—	—	—	—	—	—	—	—
VAC. PRESSURE	26	26	26	26	26	26	26	26	26	26	26	25.5	25.5	25.5	25.5	25.5	25.5	25.5	25.5	26	26	26	26	26	26
O_2 PRESSURE	20	20	20	20	20	20	20	20	20	20	20	20	20	20	20	20	20	20	20	20	20	20	20	20	20
NO	5	5	5	5	5	5	4	4	4	5	5	5	5	5	5	5	5	5	5	6	9	6	5	5	5
NO_2	7	7	7	8	7	8	7	6	6	9	10	7	7	6.5	7	8	7.5	6.5	8	10	11	8	6	6	5
PAPER	✓	✓	✓	✓	✓	✓	✓	✓	✓	✓	✓	✓	✓	✓	✓	✓	✓	✓	✓	✓	✓	✓	✓	✓	✓
OPERATION	1332	1430 1435	1529 1536	1630 1637	1734 1749	1830 1837	1930 1937	2030 2038	2130 2138	2230 2240	2330 2340	0030 0036	0130 0136	0230 0236	0330 0336	0430 0436	0530 0541	0630 0636	0730 0741	0830 0837	0929 0937	1039 1037	1130 1135	1230 1235	1320 1336
VENTURI READING	535 276	535 276	535 276	533 277	527 283	523 287	524 286	527 283	530 279	533 277	534 277	532 279	532 279	534 277	532 279	533 277	530 280	527 283	527 283	526 284	526 284	524 286	524 286	528 282	529 283
READ GAS METER CF	4815	508	737	956	991	191	210	332	448	578	695	801	924	043	176	286	418	530	641	773	890	002	114	231	356.2
GAS FLOW MANOMETER	457 343	458 344	457 344	457 344	457 347	452 348	453 347	454 347	456 344	456 344	457 344	456 344	456 344	456 344	456 344	456 344	456 344	454 347	454 346	454 346	454 346	453 348	453 348	454 347	454 346
INDOOR TEMP. °C	22.5	22.5	22	22	22	22	22	22	22	22	22	22	22	22	22	22	22	22	22	22.5	22	22.5	22.5	22.5	22.5
TIME GAS METER SEC.	29.9	29.7	29.3	29.7	30.4	30.9	30.8	30.5	30.0	29.8	29.7	29.9	30.0	29.7	29.9	29.8	30.2	30.8	30.4	30.7	31.0	31.0	30.9	30.3	30.2
S MANIFOLD	✓	✓	✓	✓	✓	✓	✓	✓	✓	✓	✓	✓	✓	✓	✓	✓	✓	✓	✓	✓	✓	✓	✓	✓	✓
U MANIFOLD	✓	✓	✓	✓	✓	✓	✓	✓	✓	✓	✓	✓	✓	✓	✓	✓	✓	✓	✓	✓	✓	✓	✓	✓	✓
INITIALS	JRL	JRL	GWS	DAC	DAC	DAC	DAC	DAC	DAC	DAC	DAC	EGC	EGC	EGC	EGC	EGC	EGC	EGC	EGC	GWS	GWS	JRL	JRL	JRL	JRL

APPENDIX G

COLLABORATORS' ANALYSIS INSTRUMENTATION AND COMMENTS

1. Analysis instrumentation used by the collaborators: The spectrophotometric analysis instrumentation used by the collaborators is identified in Table G-I.

TABLE G-I

ANALYSIS INSTRUMENTATION USED BY COLLABORATORS

Collaborator	Instrumentation	Collaborator	Instrumentation
A	Bausch & Lomb 20	F	Perkin-Elmer 356
B	Beckman DU	G	Shimadzu QV-50
C	Beckman DB	H	Beckman B
D	Beckman DB	I	Bausch & Lomb 88
E	Beckman DB	J	Shimadzu QV-50

2. Comments of the collaborators: During the orientation of the collaborators at the field site, they were asked to provide MRI with comments on the method write-up, problem areas, etc. Four of the 10 responded with comments which are given below by collaborator code.

Collaborator A: "The analysis 6 February 1974 were run at 540 nm. When I ran my standard curve and samples on 14 February 1974, I noted the absorbance difference between 530 nm and 540 nm was less than 2% on every sample."

Collaborator E: "All samples were analyzed three times. I am sending copies of data for all analysis in hopes that they might be of value to you. The first set of data, with curve and calibration curve attached, would be what would usually be reported. The second, 20 February, and the third, 25 February, were simply to verify my own work. Slope for the various curves were: 12 February - 0.465; 20 February - 0.500; and 25 February - 0.480. Unknown solutions Nos. 15 and 128 were analyzed each time and the following results were obtained: Sample No. 15 - 1.0 ppm (absorbance 0.5, slope 0.5; absorbance 0.48, slope 0.48); Sample No. 128 (absorbance zero for each test). Review of my data shows no consistant bias, and precision not as good as desired. Although samples varied slightly, unknown remained constant."

Problem areas of concern to our laboratory follow:

"Flowmeter calibration - use of a 1-liter wet test meter is impossible for us. We were unable to locate anything smaller than 0.1 CFM. Wet-test meters are no more accurate than the accuracy of their calibration. Calibrating a flowmeter at our elevation could introduce serious errors in air measurements at your elevation. Calibration should have been verified at the test site.

I would like to question the efficiency figure of 0.82. Samples run in the 180-190 cc/min area on the spiked line appear to show higher micrograms per cubic meter readings than those sampled at 220 cc/min.

In the method of analysis, the NEDA addition should be changed. Addition of fractional amounts (1.4 ml) causes possible errors to enter which need not occur. A standard addition of 1 or 2 ml can be accomplished with greater speed and accuracy.

We feel that a fritted glass bubbler should be used, regardless of cost factors. Better dispersion of gas in the liquid would certainly be achieved. Change of frit size in cleaning would not be any more critical than matching restricted orifices to obtain uniform 0.6 mm.

Automation of analysis, using the Technicon Auto Analyzer, resulted in comparable answers in one-tenth of the time required by hand. All data submitted to you follow EPA methods verbatim."

Collaborator H: "The samples collected were analyzed in strict accordance with the method except in the calibration of the rotameter used. The rotameter was calibrated with a bubblemeter because of the unavailability of the 1-liter wet-test meter as called for in the method.

We found the entire method to be straightforward and simple. No difficulty was encountered in the analysis."

"Comments and Recommendations on the EPA's Tentative Method for the Determination of Nitrogen Dioxide In the Atmosphere (Sodium-Arsenite Method)"

3.1 The "NO_2" between "the" and "sampled" appears to be a typographical error. It should be "NO."

4.3 Our experiences indicate that the absorbing solution readily absorbs NO_2 from the air. We recommend that "when kept tightly sealed" be added to the sentence.

5.1.2 Drawing out a glass tubing to 0.3 to 0.8 mm ID is a difficult task. We suggest that common twist drills be used to measure the orifice diameter. We therefore recommend that the following be inserted after the fourth sentence: "The orifice diameter should permit a No. 80 drill to pass through but not a No. 68 drill."

5.2.5 The measurement of absorbance at 540 nm is correct, not at 530 nm as previously suggested during the field sampling phase.

6.2.2 Our experience indicates that at times the slopes of calibration curves prepared using NEDA from different bottles or lots vary. We recommend the following sentence be added: "When a new bottle or lot of NEDA is used, prepare a new standard curve."

7.1 The procedure requires the momentary in-line connection of the calibrated flowmeter before the actual sampling is begun to assure that the sampling rate is within 180-220 ml/min. Does this not constitute a false start?

When measuring the exact flowrate with the calibrated flowmeter in-line, the bubbling in the absorbing solution causes the flowmeter ball to bounce erratically and makes it difficult to obtain an accurate reading. We do not have a recommendation to alleviate this problem.

7.2 It is inevitable that some water will evaporate from the absorbing solution during the 24-hr sampling period. We recommend that the lost water be replaced immediately after sampling to forestall any loss of the concentrated sample during transit due to leakage or spillage. Therefore, the first sentence of this paragraph should be transferred to the end of paragraph 7.1.

The absorbing solution absorbs NO_2 from the atmosphere readily. Therefore, during the color development period, the solution should be capped tightly. In this respect we find that a 25-ml glass stoppered graduate cylinder instead of in a test tube minimizes this problem.

It is good analytical practice to record the absorbance reading before converting it to concentration unit. We therefore recommend that "and record" be inserted between "measure" and "the" on line 7.

We believe that for better accuracy and consistency the slope of the calibration curve should be used to convert the absorbance readings to equivalent concentration units. We therefore recommend that "Read μg NO_2^-/ml from the calibration curve (Section 8.2)" on line 8 be deleted and substituted by "Calculate the μg NO_2^-/ml by dividing the absorbance by the slope of the calibration curve obtained in Section 8.2."

8.2 No procedure is given on how the slope of the curve is obtained. We recommend that the average slope be used and calculated as follows:

$$b = \frac{A}{\mu\ell\ NO_2}$$

9.2 We believe that the 0.82 factor includes not only the sampling collection efficiency but also includes the conversion factor for the NO_2 gas to nitrite ion (NO_2^-) in solution. We therefore recommend that it be labeled "average overall efficiency."

Collaborator I: "Enclosed is the data and results of the NO_2 collaborative test. The samples were run only once, so the final values are not an average. Also note that I have enclosed a copy of a Modified Christie Method. By reducing the volume of test reagents used and increasing the concentration of them, the sensitivity of this method is increased. This is the method which we use in our laboratory."

TECHNICAL REPORT DATA

(Please read Instructions on the reverse before completing)

1. REPORT NO.	2.	3. RECIPIENT'S ACCESSION NO.
EPA-650/4-74-019a		

4. TITLE AND SUBTITLE	5. REPORT DATE
Collaborative Testing of Methods for Measurements of NO_2 in Ambient Air: Volume 1 - Report of Testing	June 1974
	6. PERFORMING ORGANIZATION CODE

7. AUTHOR(S)	8. PERFORMING ORGANIZATION REPORT NO.
Paul C. Constant, Jr., Michael C. Sharp, George W. Scheil	

9. PERFORMING ORGANIZATION NAME AND ADDRESS	10. PROGRAM ELEMENT NO.
Midwest Research Institute 425 Volker Boulevard Kansas City, Missouri 64110	1 HA 327
	11. CONTRACT/GRANT NO.
	68-02-1363

12. SPONSORING AGENCY NAME AND ADDRESS	13. TYPE OF REPORT AND PERIOD COVERED
Office of Research and Development U.S. Environmental Protection Agency Research Triangle Park, North Carolina 27711	14. SPONSORING AGENCY CODE

15. SUPPLEMENTARY NOTES

16. ABSTRACT

A report on the collaborative test, by 10 organizations, of the "Tentative Method for the Determination of Nitrogen Dioxide in the Atmosphere (Sodium-Arsenite Procedure)" to determine the precision and bias of the method. The report covers the NO_2, ambient-air sampling system, test site, selection of collaborators, statistical design, collaborators' field sampling, their analysis of samples, statistical analysis of collaborators' results, conclusions and recommendations.

17. KEY WORDS AND DOCUMENT ANALYSIS

a. DESCRIPTORS	b. IDENTIFIERS/OPEN ENDED TERMS	c. COSATI Field/Group

18. DISTRIBUTION STATEMENT	19. SECURITY CLASS *(This Report)*	21. NO. OF PAGES
Unlimited	Unclassified	
	20. SECURITY CLASS *(This page)*	22. PRICE
	Unclassified	

EPA Form 2220-1 (9-73)