EPA-600/7-77-070
July 1977

EXPERIMENTAL SIMULATION OF SINGLE AND MULTIPLE CELL COOLING TOWER PLUMES

by

Lorin R. Davis
Mostafa A. Shirazi
David L. Slegel

Ecosystems Modeling and Analysis Branch
Corvallis Environmental Research Laboratory
Corvallis, Oregon 97330

CORVALLIS ENVIRONMENTAL RESEARCH LABORATORY
OFFICE OF RESEARCH AND DEVELOPMENT
U.S. ENVIRONMENTAL PROTECTION AGENCY
CORVALLIS, OREGON 97330

DISCLAIMER

This report has been reviewed by the Corvallis Enviromental Research Laboratory, U.S. Environmental Protection Agency, and approved for publication. Mention of trade names or commercial products does not constitute endorsement or recommendation for use.

FOREWORD

Man and his environment must be protected from the adverse effects of pesticides, radiation, noise, and other forms of pollution, and the unwise management of solid waste. Efforts to protect the environment require a focus that recognizes the inter play between the components of our physical environment--air, water, and land. The Corvallis Environmental Research Laboratory contributes to this multidisciplinary focus through programs engaged in

- studies on the effects of environmental contaminants on the biosphere, and
- a search for ways to prevent contamination and to recycle valuable resources.

This report presents the results of a study to determine some of the dilution characteristics of single and multiple port buoyant discharges typical of modern natural and mechanical draft cooling towers.

A. F. Bartsch
Director, CERL

ABSTRACT

An experimental investigation was conducted to determine the dilution characteristics of single and multiple port buoyant discharges typical of modern natural and mechanical draft cooling towers. Simultaneous measurements of velocity and tracer concentration profiles were taken at various downstream locations in the three-dimensional plumes discharged into a stagnant ambient using a hot film anemometer and conductivity probe. The number of discharge ports was varied from one to seven. Discharge densimetric Froude numbers were varied from 1.5 to infinity. Numerical integration of the profiles gave dilution, tracer conservation, and momentum fluxes. The effect of reducing Froude number was to increase entrainment considerably. Increasing the number of discharge ports reduced the rate of entrainment. In multiple port discharges the shape of the plume changed from an elongated configuration to nearly axisymmetric within the first 20-30 diameters of discharge. This report covers the period from July 1975 to December 1976 and work was completed as of December 1976.

CONTENTS

Foreword iii

Abstract iv

Figures. vi

List of Symbols. vii

1. Introduction 1
2. Conclusions and Recommendations. 3
3. Apparatus and Procedure. 4
4. Results and Discussion 9

References 22

Appendix 24

A. Table A-1 Complete List of Data 24

FIGURES

Number		Page
1	Sketch of Test Apparatus in Towing Channel	5
2	Sketch of Multiple Port Discharge System	6
3	Dilution versus Distance for single Jet, $F_0 = 1.5 - \infty$	12
4	Plume Half Width versus Distance for Single Jet Discharge	13
5	Centerline Velocity Ratio versus Distance for Single Jet, $F_0 = 1.5 - \infty$	14
6	Development Zone Velocity Profiles for Single Jet, $F_0 = 2.2$	16
7	Froude Number Effects on Velocity Profiles at Fixed Downstream Distance	17
8	Dilution versus Distance for Multiple Port Discharge, $F_0 = 6$	18
9	Variation in Plume Shape for Multiple Port Discharge at Various Downstream Distances, $F_0 = 6$	19
10	Centerline Salinity Concentration versus Distance for Multiple Port Discharge, $F_0 = 6$	21

LIST OF SYMBOLS

A	Number of discharge ports aspect ratio
b	Local characteristic width of jet = $\sqrt{2}\,\sigma$
$b_{0.5}$	Local characteristic width of jet where $U/U_c = 0.5$
D	Port discharge diameter
F_o	Densimetric Froude number at outlet, $U_o/\sqrt{g_o' D}$
F_L	Local densimetric Froude number $U_c/\sqrt{g_c' b}$
g	Acceleration due to gravity
g'	Reduced gravitational acceleration, $g\,\Delta\rho/\rho_a$
J	Mass flux of salt - $\int USdA$
m	Mass flux - $\int \rho UdA$
M	Momentum flux - $\int U^2 dA$
Q	Volumetric flow rate
r	Radial coordinate perpendicular to jet centerline
S	Salinity - mass fraction
ΔT_c	Excess water surface temperature on jet centerline
ΔT_o	Discharge excess water temperature
U	Jet velocity - variable in all directions
U_o	Discharge velocity from outlet
X	Rectilinear horizontal coordinate parallel to port connecting line
Y	Rectilinear horizontal coordinate perpedicular to X
Z	Coordinate in vertical direction
$\Delta\rho$	Difference between jet centerline and ambient water densities

ρ Fluid density

σ Standard deviation of Gaussian profile

SUBSCRIPTS

a Ambient conditions

c Centerline value

o Discharge conditions

SECTION 1

INTRODUCTION

With the changing emphasis of waste heat disposal to large cooling towers instead of once-through cooling systems, an increased interest has developed into the dilution characteristics of a finite number of neighboring jets discharging at relatively low densimetric Froude numbers, F_o, such as found in mechanical draft cooling towers. This system produces a three-dimensional plume whose dilution depends on combined turbulent heat and mass transfer with the environmental ambient fluid.

Once-through cooling systems consist mainly of surface discharge or submerged discharge from a large single port or from a multiple port diffuser that may be several hundred feet long with many discharge ports. However, mechanical draft cooling towers usually have fewer than ten discharge ports. Thus, end effects cannot be neglected and, because of the initial merging process, they cannot be considered as single axisymmetric jets.

Buoyant jets have been investigated extensively in the past. Excellent reviews can be found in Hirst [1], Baumgartner and Trent [2], Briggs [3], and Silberman and Stefan [4]. Therefore, only those references directly related to this work will be discussed. Most of the reports in the above reviews deal with single jets with dilution expressed as excess temperature decay $\Delta T_c/\Delta T_o$. However, true dilution is defined in terms of the ratio of local mass flow rate of fluid in the plume to the discharge mass flow rate, m/m_o. The latter definition is related singularly to excess temperature only in the fully developed region of the plume where similarity of profiles exists and in non-stratified ambients. Since multiport discharges of finite number have non-axisymmetric, non-similar velocity and temperature profiles, both must be measured to determine dilution and its relation to excess temperature decay.

One of the classic papers on single port buoyant plumes in which both temperature and velocity were measured was presented by Schmidt [5]. He created a purely buoyant or thermal plume by placing a heating coil in a hole in a horizontal board inducing flow through it. No measurements were reported at the hole so neither a discharge flow rate nor Froude number could be determined. The rate of dilution determined from his data, however, falls below the values of $F_o = 1.5$ determined in this study. Integrating his published values of velocity and temperature at different cross sections in the plume shows a variation in the conservation of energy by as much as a factor of 2.0. This indicates the difficulty in obtaining accurate simultaneous readings of temperature and velocity, especially in stagnant ambients where the tail of the profile goes to zero. Similar problems occurred in the present study.

Rouse, et al. [6] also investigated buoyancy-induced flows from a point heat source. Although interesting to look at, an idealized point source is difficult to relate to results of a finite discharge with initial turbulence, momentum and development length. The inability to determine an initial mass flux and Froude number further complicates the problem. However, such studies are useful in determining trends in plume dynamics in the far field. The authors were able to do this very successfully. Jirka and Harleman [7] investigated multiport discharges into shallow water from submerged outfall diffusers. Both two- and three-dimensional configurations were examined. They developed stability criteria useful in analyzing plume spreading at the water surface but due to the shallowness of the water and the long length of the diffusers, their data do not apply directly to this study. Kannberg and Davis [8] experimentally investigated temperatures in deep submerged multiport discharges and developed models primarily applicable to two-dimensional diffusers with no end effects. Sforza, et al. [9] investigated velocities in the isothermal discharge of air into air from a variety of discharge shapes including rectangular slots. Their findings will be compared with the results of this investigation.

Kotsovinos [10] studied the entrainment of plane (two-dimensional) turbulent buoyant slot jets. As in the present study, he conducted simultaneous measurements of temperature and velocity within the plumes for a variety of Froude numbers and was able to determine both dilution and excess temperature decay directly. His is an excellent study but it does not include end effects or mixing and merging of plumes.

The emphasis in the present investigation was to obtain simultaneous measurements of velocity and tracer across the plume in a variety of single and three-dimensional multiple jets discharging into stagnant ambients. The objective was to obtain direct entrainment data to facilitate modeling of a three-dimensional plume from cooling towers with one or more neighboring cells.

SECTION 2

CONCLUSIONS

The measurement of dilution from single and multiple port buoyant jets with no ambient current has been made along with the decay in centerline salt concentration by simultaneously measuring velocities and salinity within the plumes. The effect of Froude number on dilution was considerable with greater dilution at lower Froude numbers. The approximate expression showing this effect was given in terms of the entrainment coefficient,

$$\alpha = 0.057 + 0.083\ F_o^{-0.03}.$$

For multiple port discharge the effect of aspect ratio (number of discharge ports) was to decrease dilution with increasing aspect ratio. The approximate expression showing this effect was found to be

$$Q/Q_o = 1.0 + 0.46(Z/D)^{1.1}(A)^{-0.52}$$

It was found that the shape of multiple port plumes changed from an elongated configuration to nearly axisymmetric within the first 20-30 diameters of discharge.

The experimental scatter in the results and the inability to accurately measure the low velocities in the "tail" of the velocity profiles using a hot film anemometer precludes the drawing of firm conclusions at present. It is recommended that the results of this study be checked with a different anemometer such as a Laser Doppler system with a "Bragg" cell so the lower velocities will be more accurate. It is also recommended that the work be extended to include ambient velocity effects and discharge line orientation relative to the ambient current.

SECTION 3

APPARATUS AND PROCEDURE

Water was chosen as the working fluid with the buoyant jets being created by discharging salt water downward into fresh water. Using this technique, a wide range of Froude numbers could be obtained by adjusting the salinity of the discharge water while maintaining Reynolds numbers high enough to insure turbulent flow.

Figure 1 is a sketch of the test apparatus used in this study. The main tank was a towing channel 12.1 m long, 0.61 m wide, and 0.91 m high located at EPA's Corvallis Environmental Research Laboratory (Oregon). Both sides of the tank were plexiglass so visual measurements could be made. The discharge tank containing salt water was located on rails above the receiving tank. It was airtight except for breather tubes which maintained a constant velocity head regardless of the water level in the discharge tank. This system is described in detail in Kannberg and Davis [8]. From this tank, the salt water passed through a control valve into a plenum chamber with baffle and discharge tubes as shown in Figure 2. Also shown in this figure is the coordinate system used. The number of discharge tubes used were 1, 2, 3, 5 and 7. The tubes, 9.53 mm inside diameter and 12.7 mm outside diameter, were placed as close together as possible. This gave a port spacing to discharge diameter, L/D, of 1.33, approximating that of multiple cell mechanical draft cooling towers. Since the ports were right against each other, the number of ports approximately represented the discharge aspect ratio, A. The length of the tubes was such as to give fully developed turbulent flow at discharge.

In addition, several runs were conducted with single discharge ports of 11.2, 11.6, 11.2 mm, 13.5 mm, and 38.1 mm inside diameter to give the range in Froude and Reynolds numbers desired. The Froude numbers tested ranged from 1.5 to infinity (a momentum jet). The Reynolds numbers were all greater than 2100 which was sufficient to maintain turbulent discharge. This was easily detected by observing the density waves created by the discharge of salt water into fresh water.

Salinity within the plumes was measured with a conductivity probe and carrier amplifier similar to those described by Keeler [11] and McQuivey, et al. [12]. Velocities were measured with a Thermal Systems, Inc. (TSI) constant temperature hot film anemometer system. The two probes were mounted side-by-side on a remotely controlled string. The tips of the two probes were about 2.0 mm apart. The discharge system, traversing mechanism and probes were attached to a carriage on rails above the receiving tank and could be towed at desired velocities ranging from 0.5 to 50.0 cm/s along the length of the receiving tank. This feature was only used for probe calibration since tests were conducted in stagnant water.

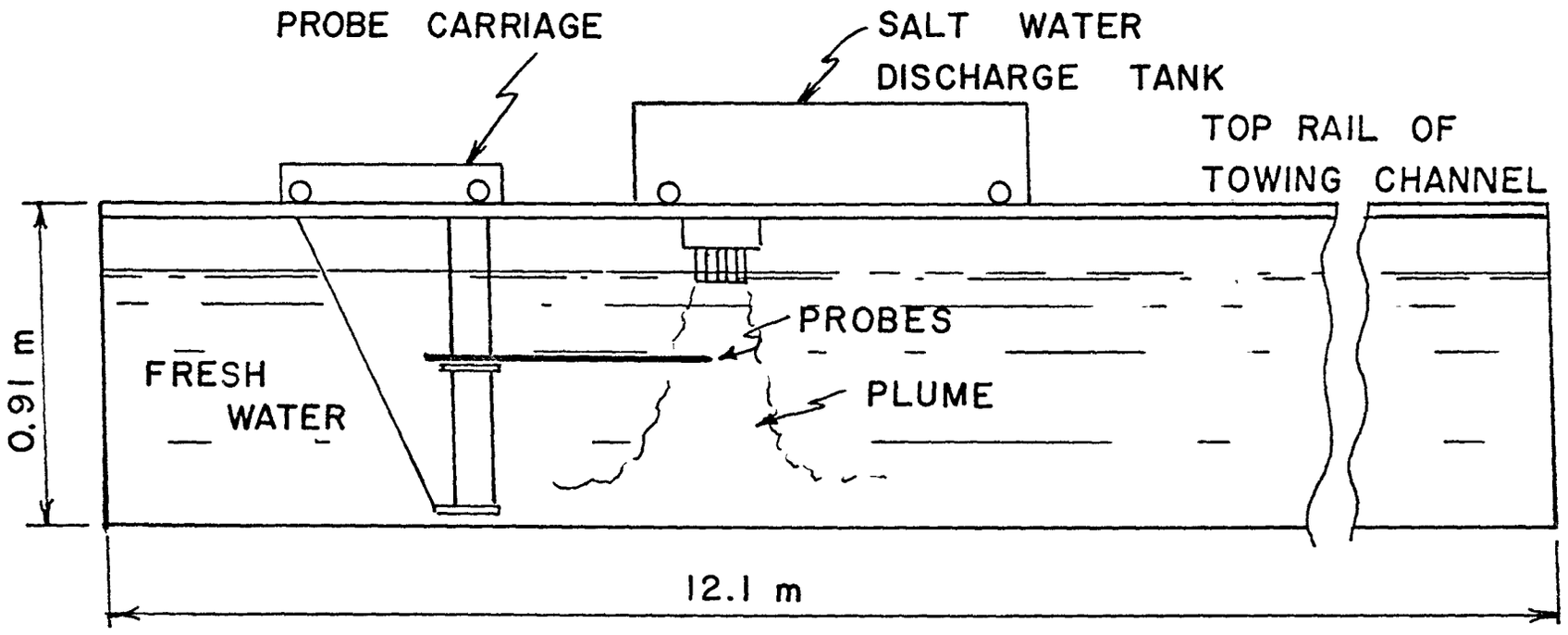

Figure 1. Sketch of test apparatus in towing channel

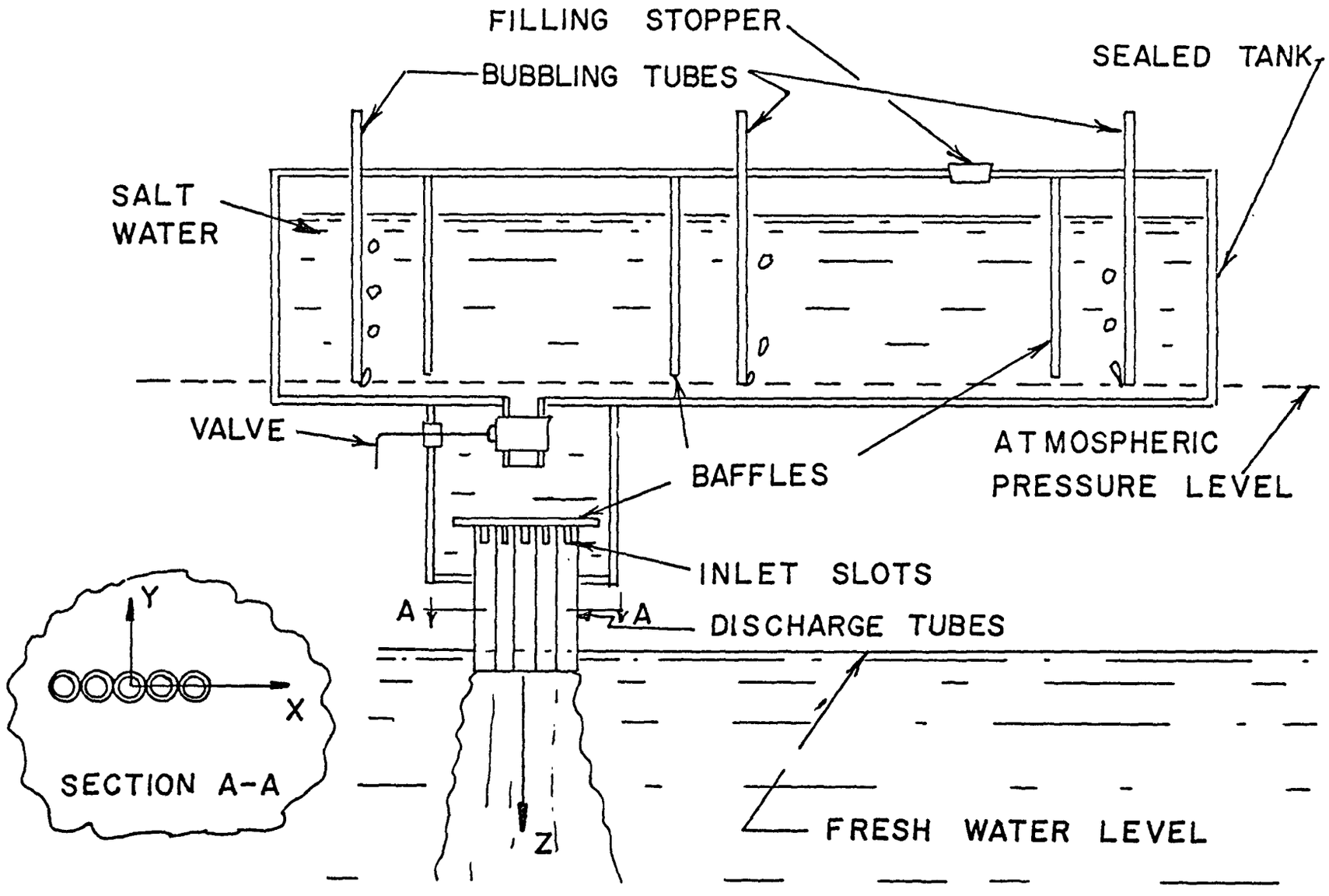

Figure 2. Sketch of multiple port discharge system

Calibration of the conductivity probe was fairly stable as long as it was kept free of dirt and oxidation. Considerable care was taken before each test to clean the probe and adjust the gain of the carrier amplifier to bring the signal output in agreement with a predetermined calibration curve. It was found that this procedure insured that the probe response agreed with the calibration curve over the full range of salinities of interest.

The overheat ratio for the hot film anemometer probe could not be set as high as recommended by the manufacturer without causing vapor bubbles to form on the probe, thus creating signal drift. Operation at a reduced overheat caused the response to be sensitive to the water temperature. To resolve this problem, a calibration curve was obtained at a desired nominal reduced overheat by towing the probe through the tank for a full range of speeds. Then, before each run the probe was towed at one known speed and the overheat was adjusted until the signal reponse agreed with the previously determined calibration curve. This brought the probe back into calibration as the tank temperature changed from day to day.

After selecting the desired discharge configuration, the discharge velocity and salinity were adjusted to give the desired Froude and Reynolds numbers. Discharge flow rates were calculated from the measured time it took a known amount of water to flow from the discharge tank. Most runs were with sea water at a salinity of 32 ppt. For runs with F_o = 1.5 and 3.0, the salinity was increased so the discharge Reynolds number could be maintained above the critical value. For F_o = 8.7, 23 and 36, the salinity was reduced so discharge flow rates could be maintained, allowing longer run times.

With the system properly adjusted, runs were made while traversing the plume horizontally at desired locations. The probes were left at each point long enough to obtain a good time average reading. The velocity signal was squared and averaged with several time constants using a true RMS meter. It was found that a record length of up to one minute was required to provide sufficient information for a stable variance. For single port discharges where the plume can be assumed symmetrical, a single horizontal traverse was made through the center of the plume at each downstream location, Z/D. For multiport discharges, however, several horizontal traverses were made through the plume at each Z/D location to provide sufficient readings for a three-dimensional picture of the plume cross section. The usual spacing for these readings was on 1.0 cm centers in both the X and Y directions. In high shear areas, 0.5 cm spacings were used.

Downstream locations, Z/D, ranging from 0.09-40 diameters were investigated with the bulk of the data taken at 10, 20, and 30 diameters. Readings near the discharge ports were usually not taken due to the inaccuracies of the probes in high gradient regions caused by their size relation to the shear layer thickness. One run was made at a Froude number of 2.1 using a large discharge diameter port (38.1 mm) with data taken near the discharge port. This provided information on discharge profiles and their development in the zone of flow establishment. In the far field, the hot film probe could not give accurate readings in the low velocity tail of the expanding plumes. Since this region grew more important in determining dilutions as Z/D increased and because bottom effects began to appear, far field readings

were not taken. The tank was drained after each series of runs and refilled with fresh water to prevent salt build up in the ambient receiving water.

Several multiport runs were made with dye in the discharge water. This was done with the line of ports both perpendicular and in line with the tank side walls. Photographs were taken to determine plume spreading in both the X and Y directions to support the data taken with the two sensors.

SECTION 4

RESULTS

The appendix contains a listing of all the data taken in this study. Each set of data contains the test number, Froude number, number of ports, dimensionless X-Y-Z location of the point, the velocity, U/U_o, and salinity, S/S_o (if applicable and available). A Froude number of 999 is for a momentum jet. Salinity data for Froude numbers of 1.5 and 3.1 are unavailable due to equipment failure.

Table 1 presents the basic summarized results of this study, both for single and multiport discharges. Given on this table are: number of ports, discharge densimeteric Froude number, the plume half widths in the X and Y directions, dilutions, and terms relating local momentum and salinity fluxes to discharge conditions. These initial discharge conditions are also indicated on the table. Dilution is defined as the local mass flow rate as compared to the discharge flow rate or m/m_o. Mathematically this is given as $\rho UdA/\rho_o Q_o$. Since the density across the plume changes less than 1.0% from the ambient, the dilution can be determined approximately by considering volume fluxes only. In this study, the dilution was calculated numerically for the three-dimensional plumes by

$$Q/Q_o = \Sigma\Sigma U_{ij}\Delta A/Q_o \qquad (1)$$

where U_{ij} were the velocities at each grid point and ΔA was the grid size. For the single plumes, dilution was determined by using a best fit Gaussian curve to the data in the expression

$$Q/Q_o = 2\pi U_c\int \exp[-(r/b)^2]rdr/Q_o \qquad (2)$$

where U_c was the maximum cross section velocity and b was the characteristic width determined from the data.

An indication of the accuracy of the data was obtained from the expression

$$J/J_o = \int USdA/(Q_oS_o) \qquad (3)$$

where S is the salinity. Since the receiving water was fresh, the mass flux of salt in the plume should be constant or $J/J_o = 1.0$ at all Z/D along the plume. The value of this ratio was determined in the same manner as dilution.

The momentum flux ratio, M/M_o

$$M/M_o = \int U^2dA/U^2_o \qquad (4)$$

TABLE 1. TABLE OF REDUCED DATA

TEST	FO	A	Z/D	Q/QO	M/MO	J/JO	UC/UO	SC/SO	B-1/2X	B-1/2Y	UO CM/S	SO 0/00	D CM
17	99.99	1.00	5.00	2.60	.97	0	.81	0	.80	0	39.30	0	2.33
17	99.99	1.00	7.00	3.61	1.02	0	.42	0	1.00	0	39.30	0	2.33
18	99.99	1.00	10.00	3.42	.83	0	.56	0	.80	0	127.00	0	1.12
17	99.99	1.00	10.00	4.00	1.05	0	.40	0	1.20	0	39.30	0	2.33
17	99.99	1.00	15.00	5.69	.98	0	.26	0	1.70	0	39.30	0	2.33
18	99.99	1.00	20.00	5.70	.92	0	.37	0	1.20	0	127.00	0	1.12
18	99.99	1.00	30.00	10.20	1.15	0	.24	0	2.80	0	127.00	0	1.12
18	99.99	1.00	40.00	11.40	.80	0	.17	0	3.20	0	127.00	0	1.12
12	36.00	1.00	25.00	10.65	1.30	.95	.29	.16	2.10	0	20.90	7.40	1.16
12	36.00	1.00	37.00	16.30	1.50	.96	.22	.11	2.90	0	20.90	7.40	1.16
16	23.00	1.00	37.00	19.80	2.15	1.00	.20	.08	4.30	0	47.20	4.50	1.16
10	8.70	1.00	5.00	4.50	2.12	.85	1.20	.60	.70	0	35.70	9.00	2.33
9	8.70	1.00	10.00	5.50	1.60	1.00	.64	.33	1.10	0	36.00	8.00	2.33
11	8.70	1.00	20.00	12.20	2.37	1.00	.40	.18	2.20	0	37.70	7.40	2.33
35	3.50	1.00	10.00	8.80	2.70	.92	.63	.22	1.20	0	22.00	40.00	1.34
36	3.50	1.00	15.00	10.20	3.20	.80	.49	.15	1.90	0	22.00	40.00	1.34
37	3.50	1.00	20.00	19.60	6.40	1.02	.48	.11	2.60	0	22.00	40.00	1.34
38	3.50	1.00	25.00	28.40	9.00	1.10	.44	.09	3.20	0	22.00	40.00	1.34
1	3.10	1.00	10.00	8.73	3.40	0	.84	0	1.30	0	23.00	40.00	1.35
1	3.10	1.00	20.00	11.60	3.60	0	.69	0	1.60	0	23.00	40.00	1.35
1	3.10	1.00	25.00	30.70	10.20	0	.54	0	3.90	0	23.00	40.00	1.35
5	2.10	1.00	.09	1.05	1.81	.74	1.60	.90	.50	0	14.30	13.20	3.81
5	2.10	1.00	1.00	2.31	2.23	.91	1.70	.64	.52	0	14.30	13.20	3.81
5	2.10	1.00	3.00	3.20	1.76	.81	1.30	.50	.63	0	14.30	13.20	3.81
5	2.10	1.00	10.00	5.50	2.12	.91	.65	.22	1.38	0	14.30	13.20	3.81
2	1.50	1.00	10.00	9.50	4.60	0	1.00	0	1.40	0	10.10	42.50	1.35
2	1.50	1.00	20.00	30.70	17.10	0	1.00	0	2.30	0	10.10	42.50	1.35
2	1.50	1.00	30.00	61.00	33.00	0	.95	0	3.50	0	10.10	42.50	1.35
20	6.00	2.00	10.00	4.80	1.40	.50	.58	.26	2.00	1.60	33.00	32.00	.95
21	6.00	2.00	20.00	10.24	1.82	.70	.46	.17	3.40	2.30	33.00	32.00	.95
22	6.00	2.00	30.00	15.20	4.50	.70	.49	.11	4.00	3.70	33.00	32.00	.95
27	6.00	3.00	10.00	4.00	1.60	.75	.60	.26	2.40	1.70	33.00	32.00	.95
26	6.00	3.00	20.00	7.40	2.80	.84	.57	.21	3.00	3.00	33.00	32.00	.95
25	6.00	3.00	30.00	8.50	2.40	.60	.49	.14	3.50	3.90	33.00	32.00	.95
24	6.00	5.00	10.00	2.80	1.00	.70	.62	.30	3.40	1.20	33.00	32.00	.95
23	6.00	5.00	20.00	7.30	2.50	.99	.69	.21	3.60	3.30	33.00	32.00	.95
29	5.00	5.00	30.00	9.90	3.90	.82	.63	.14	3.80	4.00	28.00	46.00	.95
33	6.00	7.00	10.00	2.50	1.60	.97	.64	.34	4.60	1.30	33.00	32.00	.95
28	6.00	7.00	20.00	5.50	2.30	.80	.58	.21	6.00	2.60	33.00	32.00	.95
32	6.00	99.00	10.00	2.60	1.20	.63	.68	.34	1.00	0	33.00	32.00	.95
31	6.00	99.00	20.00	4.40	1.70	.60	.51	.16	2.50	0	33.00	32.00	.95
30	6.00	99.00	30.00	6.30	1.90	.54	.38	.13	5.10	0	33.00	32.00	.95
34	6.00	1.00	10.00	6.40	2.30	.80	.61	.17	1.30	0	28.00	32.00	.95

is also helpful in evaluating plume dynamics. For momentum jets the value of this ratio should be unity at all times due to the lack of external forces on the plume. For buoyant jets, however, this ratio should increase under the influence of buoyant forces. The values of M/M_o for each Z/D were calculated by numerically integrating the velocity squared over each plume cross section.

Figure 3 is a plot of Q/Q_o versus Z/D for the single port discharges at various Froude numbers. Lines have been drawn through the data to indicate approximate trends. Even though the data are scattered, it can be seen that the effects of Froude number are considerable. It can also be seen that the trends are not necessarily linear, reflecting partly the influence of the development zone. For the momentum jet, $F_o = \infty$, the rate of dilution is linear with distance and agrees well with published data [13, 14 and 15]. Most buoyant discharge experiments have been interested in temperature or concentration decay. Dilution as such was usually not measured. Ricou and Spalding [15] measured dilution for hydrogen discharged into air. The trend in their data agrees with Figure 3; however, they suggest that $m/m_o = 0.32(x/d)(\rho_1/\rho_2)^{1/2}$ where ρ_1/ρ_2 is the ratio of the heavier fluid density to the lighter fluid density. This expression considerably underpredicts the observed dilutions in this study.

The entrainment of ambient fluid causing dilution, $E = dQ/dz$, has been expressed as a function of an entrainment coefficient and local plume properties [16, 17] such that $E = \alpha U_c b$. In this expression α is the entrainment coefficient. For momentum jets $\alpha = 0.057$ has proven to be a good value. Abraham [18] suggested a value of $\alpha = 0.085$ for low Froude number discharges. In this study entrainment coefficients varying from 0.06 for momentum jets to 0.14 for very low Froude numbers were found. The expression

$$\alpha = 0.057 + 0.083\ F_o^{-0.3} \tag{5}$$

fit the general trend in data for the single port discharges without ambient current.

An alternate expression, derived by Fox [19] using a combination of the mechanical energy, momentum and continuity equations is $E = (\alpha_1 + \alpha_2/F_L^2)U_c b$ where F_L is the local Froude number given by $F_L = U_c/[\Delta\rho_c gb/\rho_c]^{1/2}$. The value of the first coefficient is the momentum jet value of 0.057. Hirst [1] suggested a value of 0.97 for the second. This expression does not agree with the data from this study. For example it was 40% low for $F_o = 36$ and Z/D = 30 and 30% low for $F_o = 6$ and Z/D = 10.

Figure 4 is a plot of plume half width, $b_{0.5}$, versus distance for the single port discharges investigated. These widths were based on the location where $U/U_c = 0.5$ at each cross section. Only a slight increase in plume width is observed as Froude number is decreased. The momentum jet plume growth agrees with the experimental values of Albertson [13]. Figure 5 is a plot of the plume centerline velocities versus distance for Froude numbers ranging from 1.5 to infinity. Lines indicating approximate trends have been drawn through the data. It is seen that at very low Froude numbers the buoyant forces maintain high centerline velocities which cause higher dilution rates when compared to the higher Froude number discharges.

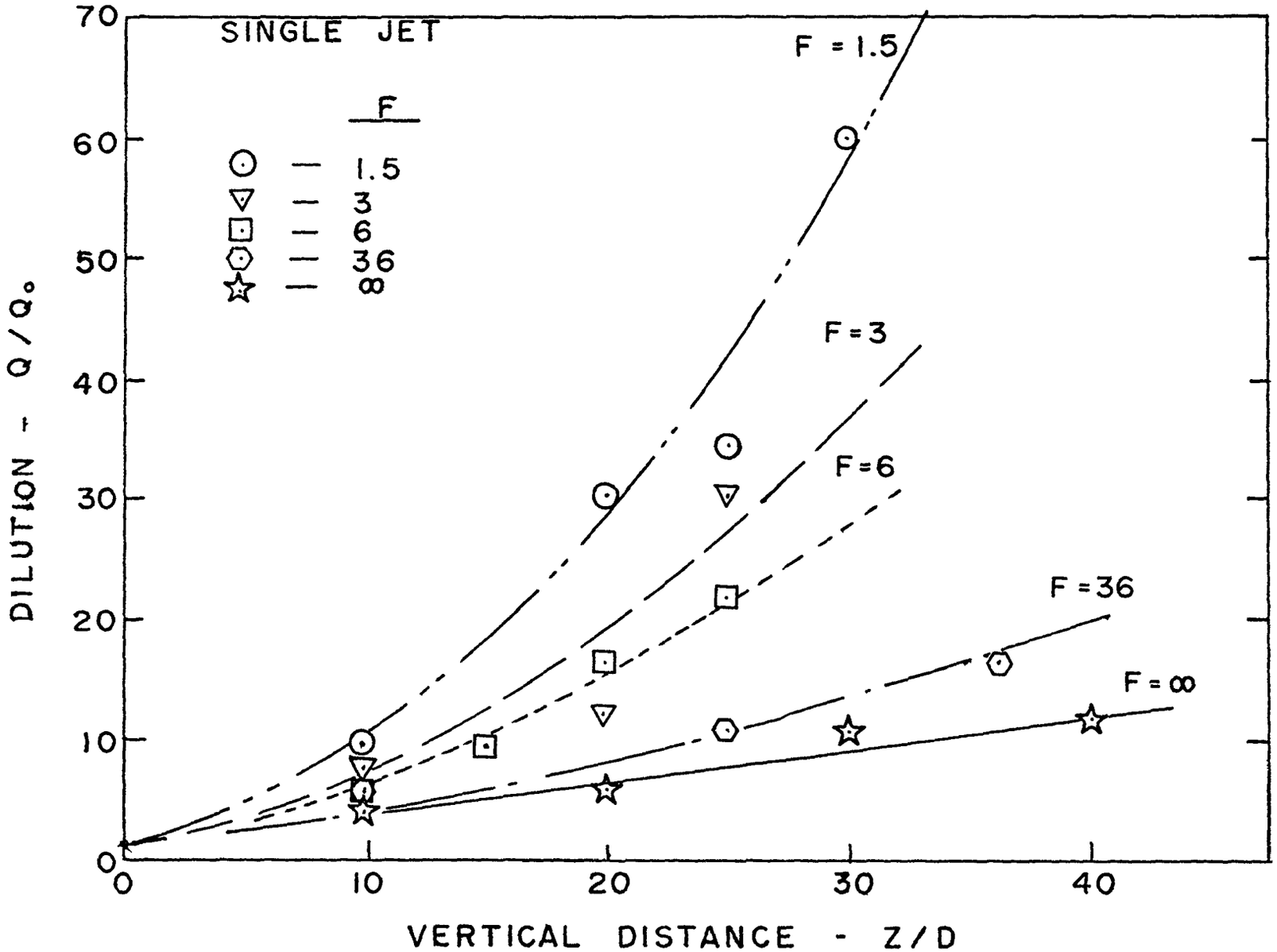

Figure 3. Dilution versus distance for single jet, F_0 = 1.5 - ∞

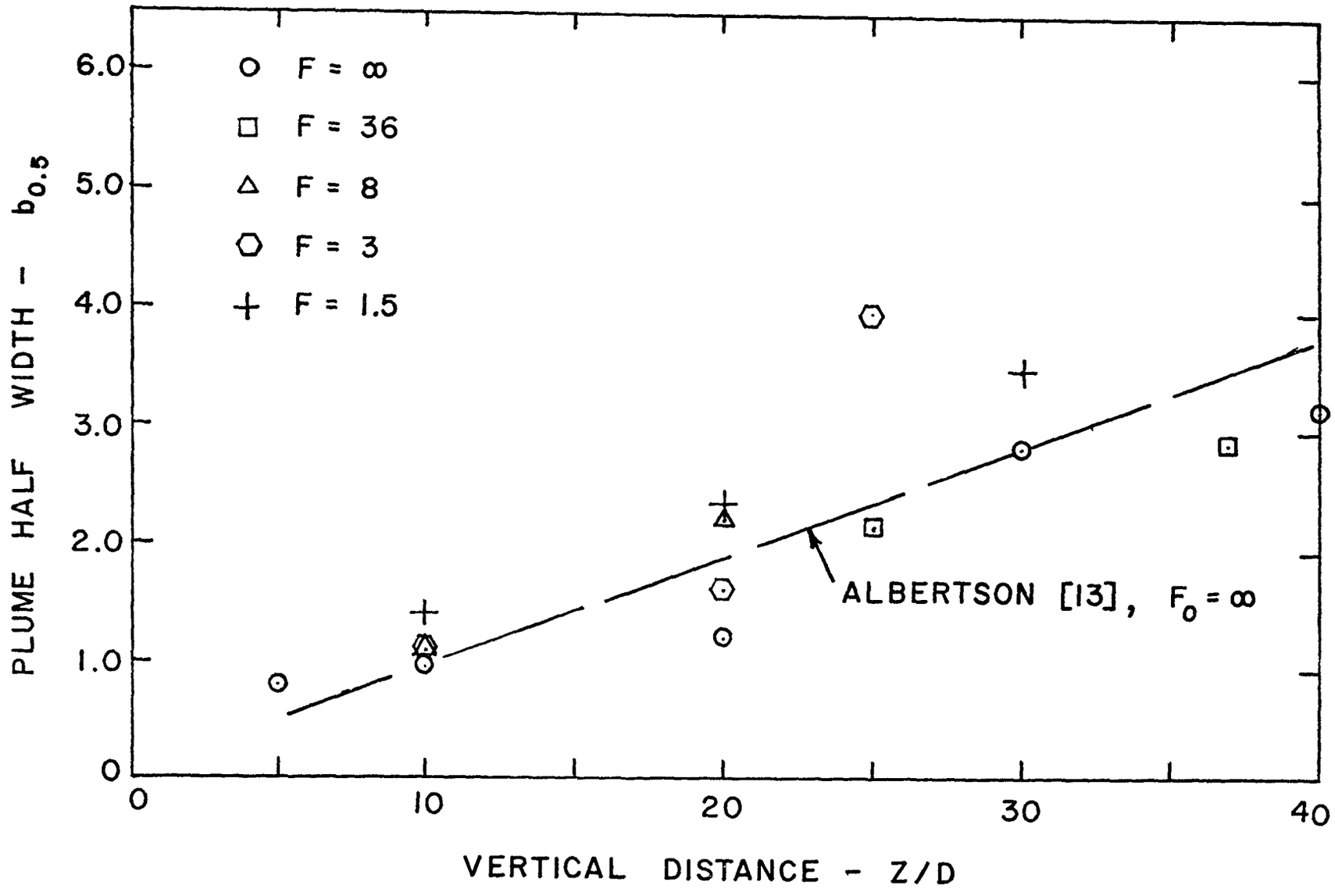

Figure 4. Plume half width versus distance for single jet discharge

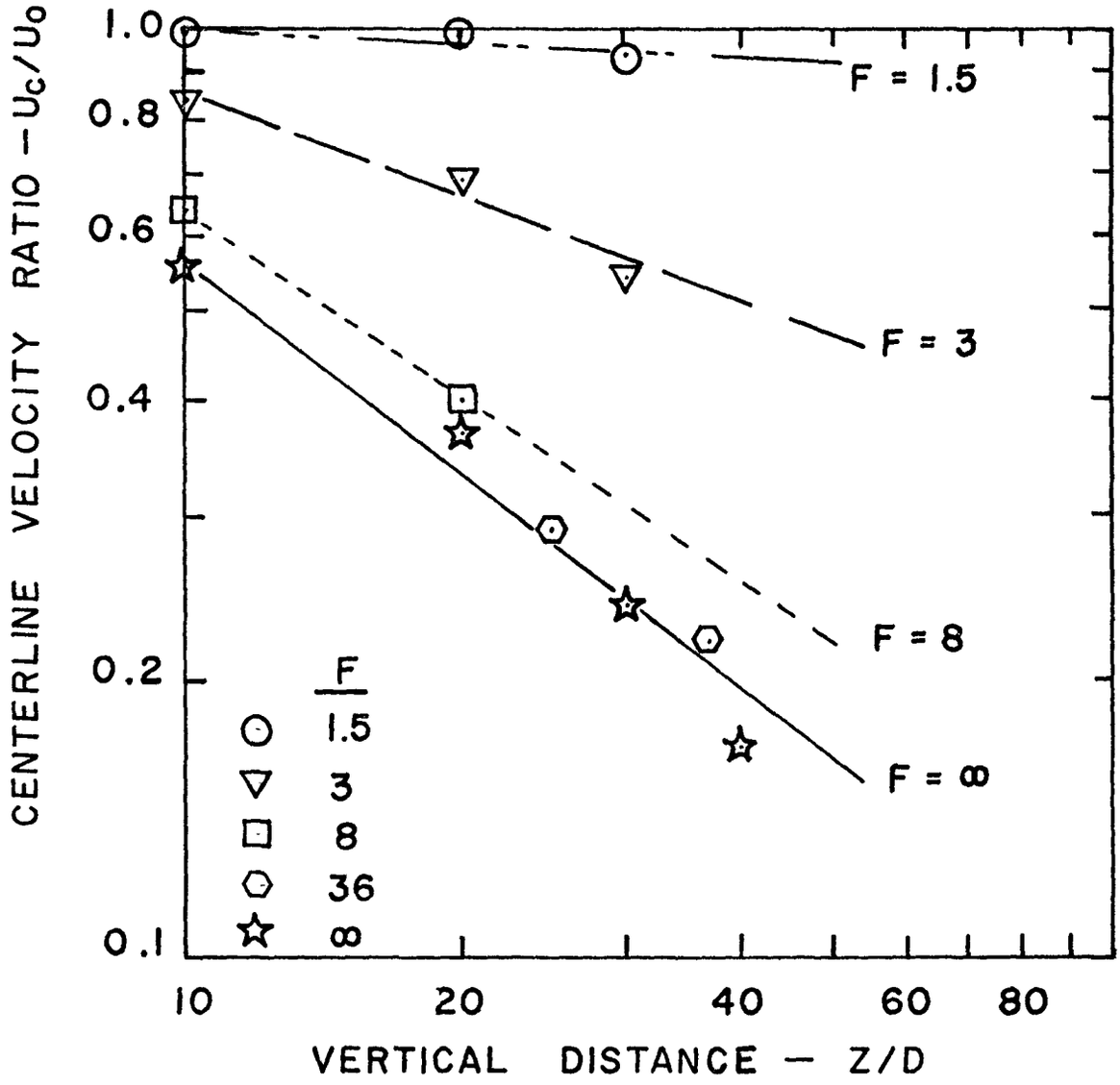

Figure 5. Centerline velocity ratio versus distance for single jet, $F_o = 1.5 - \infty$

Figure 6 is a plot of velocity profile measured close to the discharge port for a Froude number of 2.2. The Z/D distances were 0.1, 1.0, 3.0, and 10.0 diameter downstream which cover the development zone. Due to the steep velocity gradient near discharge, the profiles for Z/D = 0.1 and 1.0 are less accurate than for larger diameters downstream. The profiles on Figure 6, however, do show the extreme variation of velocities within the development zone. It is interesting to note that the boundary layer and buoyant forces within the discharge tube have caused centerline velocities to be greater than the average discharge velocity near the source. It is noted from Table 1, however, that Q/Q_0 for Z/D = 0.1 is essentially 1.0, which it should be for consistant data.

Figure 7 is plot of velocity profiles at Z/D = 10 for Froude numbers of 1.5, 3.1 and ∞. The effect of buoyant forces on velocity is clearly seen on this figure where the centerline values for the low Froude number runs are considerably higher than the non-buoyant discharge case. The minor effect buoyancy has on plume width can also be run on this figure.

Figure 8 is a plot of dilution versus distance for several multiport discharges at a nominal Froude number, $F_o = 6$. The single port discharge values for this Froude number are also included for reference. Although the data are scattered, the effect of aspect ratio A (number of ports) is evident. The greater the number of ports, the lower the rate of dilution. This is explained by the interference of the merging plumes on the entrainment mechanism. Not only is the surface area available to entrain ambient fluid decreased upon merging, but neighboring plumes also compete for the same ambient fluid thus decreasing the entrainment of each. Also included on this figure are data points taken from Kotsovinos [10] for an infinite slot (A = ∞) at Froude numbers of 8.4 and 5.5. Within the experimental limits of this study the dilution was found to approximately fit the expression,

$$Q/Q_0 = 1.0 + 0.46\ (Z/D)^{1.1}(A)^{-0.52} \qquad (6)$$

One of the more interesting characteristics of the multiple port discharges was the change in plume shape along its trajectory. Near discharge the jets from each port maintained their individual character but soon merged into a single elongated plume with the major axes in line with the line of discharge ports. As the plume grew, perpendicular spreading was greater than spreading along this line. Thus, this elongated character soon disappeared and the plume became essentially round. Figure 9 shows four different cross sectional shapes for A = 5. These are full widths as observed by dye studies. Half widths in the X and Y directions are given in Table 1. This same phenomenon was observed by Sforza, et al. [9] for rectangular slot jets of air. They divided the flow into three regions as follows: 1) The potential core or development zone where ambient mixing had not penetrated into the center of the jet. 2) The characteristic decay region where major and minor axes of the plume depended on discharge conditions but spreading in the minor axis direction was faster than in the major axis direction. Velocity profiles in the plane of the minor axis are similar; in the planes of the major axis they are non-similar. 3) Axisymmetric decay region where the plume behaves as one axisymmetric plume. These same regions were observed in this study.

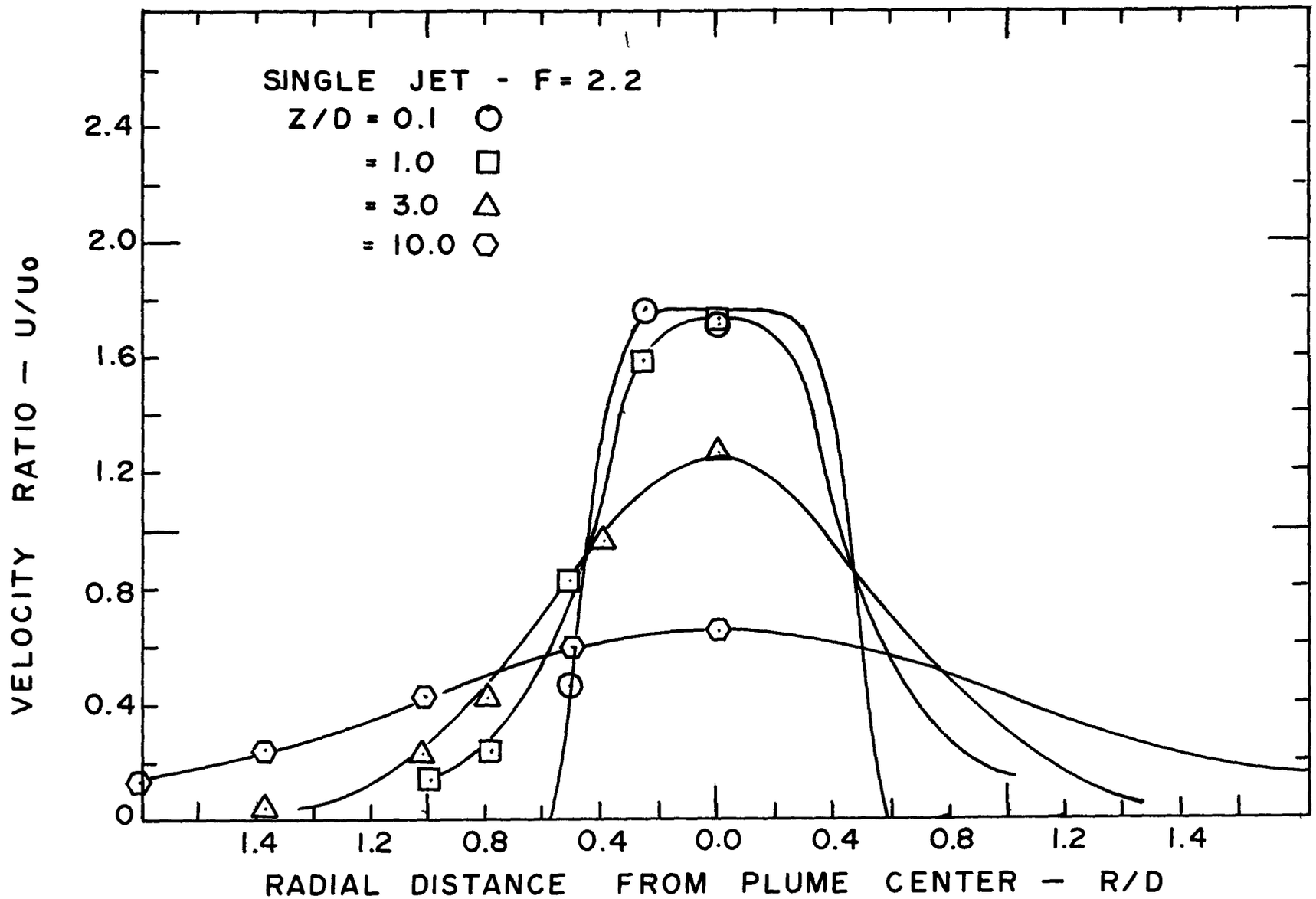

Figure 6. Development zone velocity profiles for single jet, F_0 = 2.2

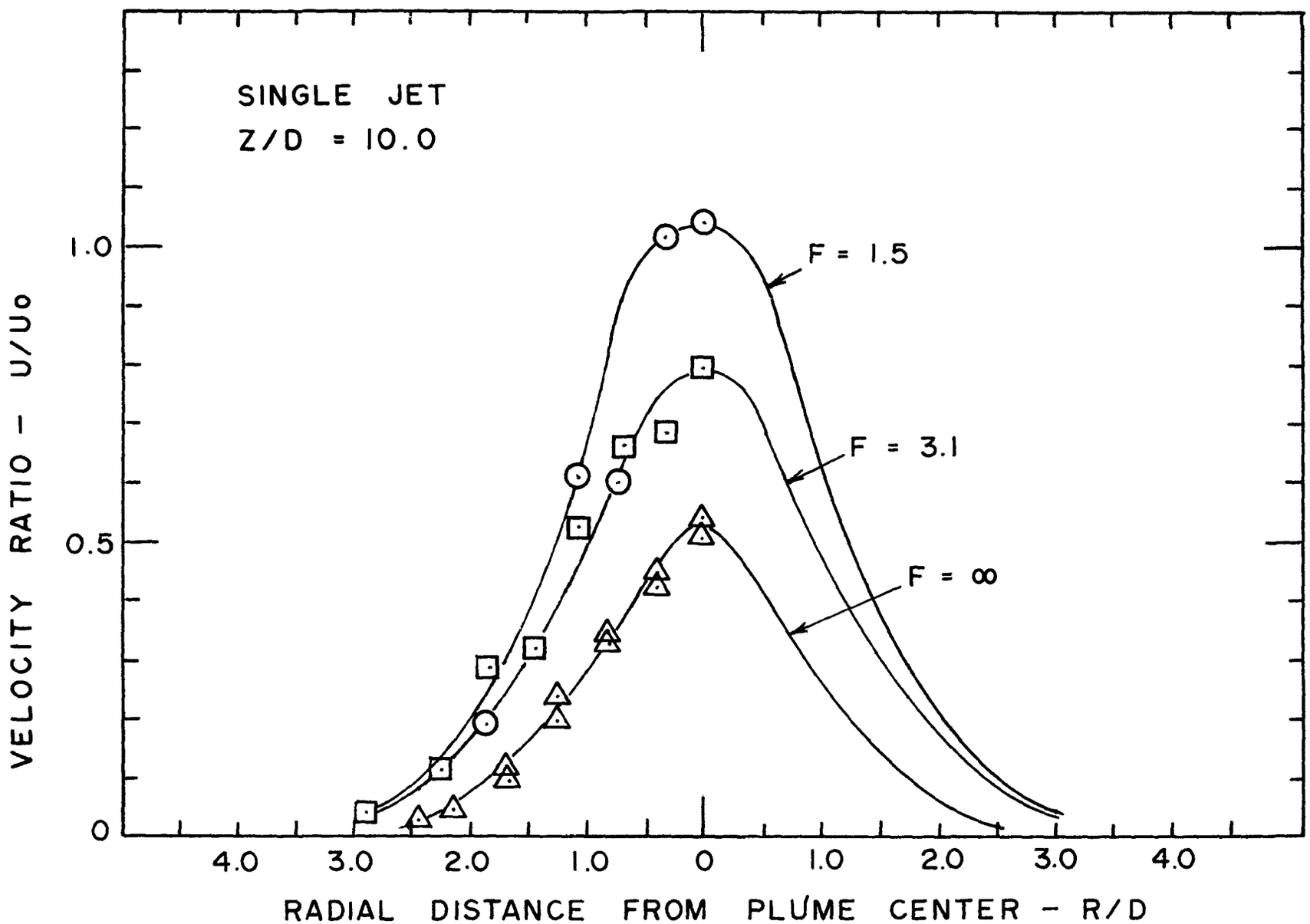

Figure 7. Froude number effects on velocity profiles at fixed downstream distance

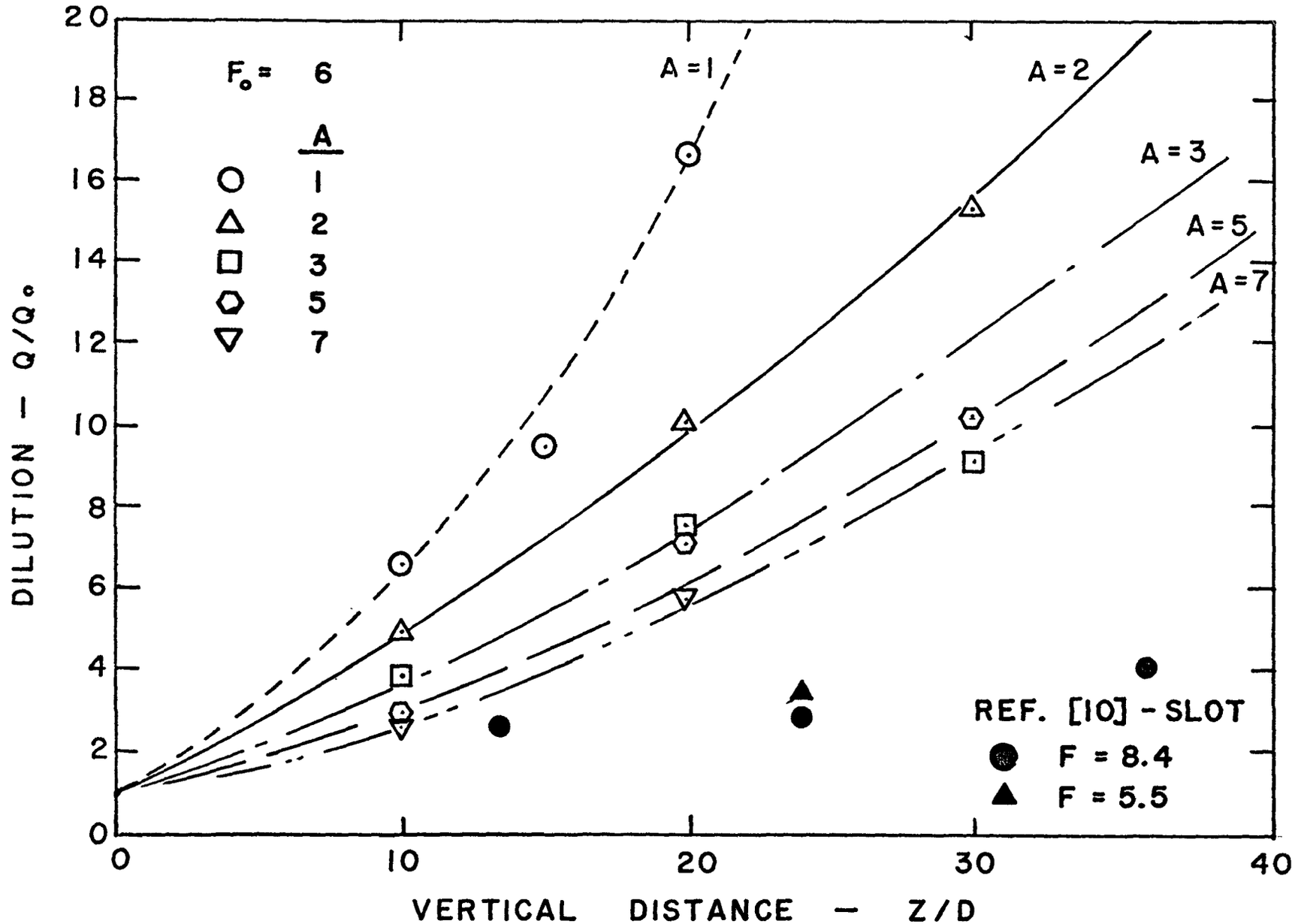

Figure 8. Dilution versus distance for multiple port discharge, F_0 = 6

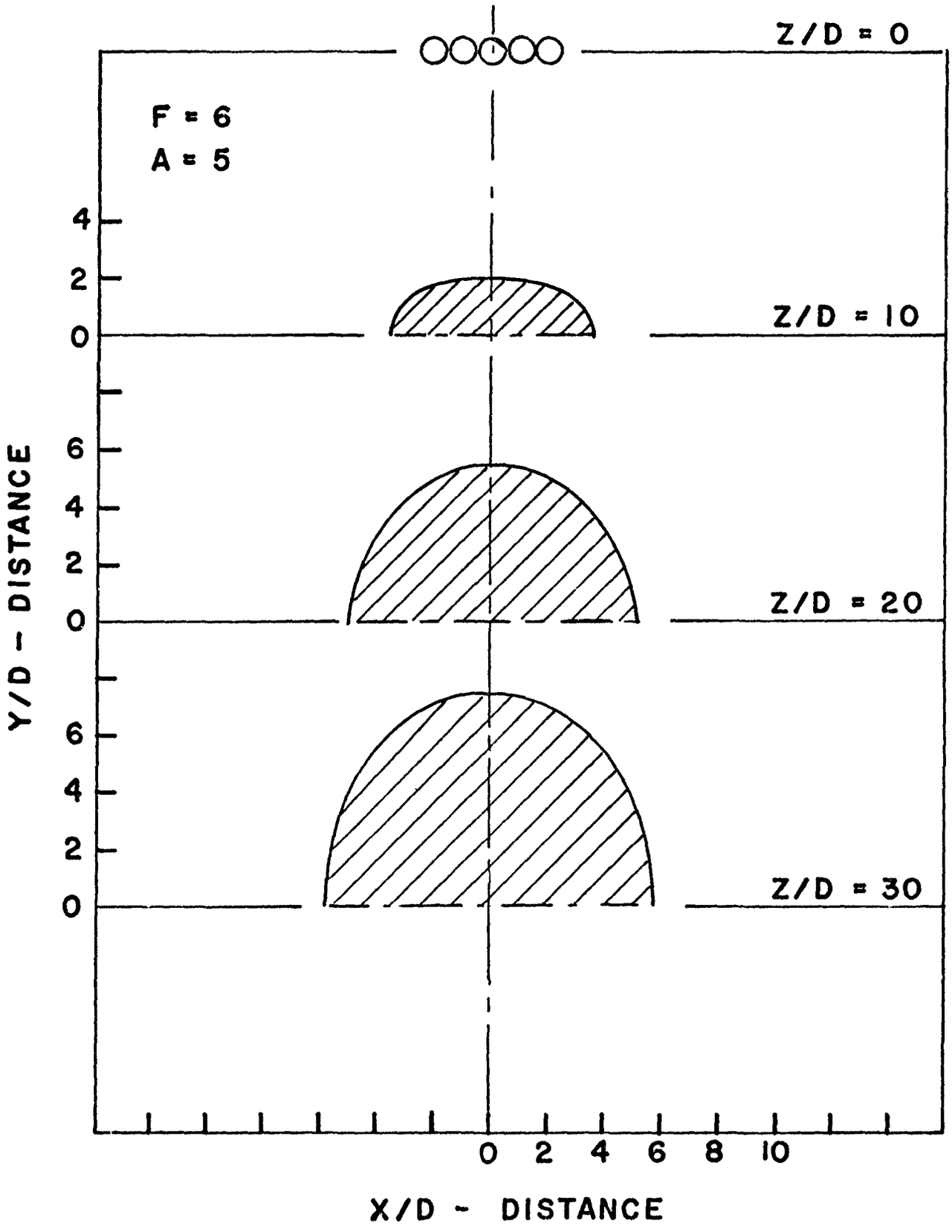

Figure 9. Variation in plume shape for multiple port discharge at various downstream distances, $F_o = 6$

Since the widths of the multiple port plumes within the characteristic decay region are different in the X and Y directions, it is not correct to express the entrainment in terms of either one alone. In addition since the profiles in the plane of the major axis are not similar, it is probably not correct to express the entrainment in the classic manner at all. As a result this was not done.

The decay in maximum salt concentration S_c/S_o along the plume centerline is of interest since this represents the decay of excess temperature in a thermal plume. Figure 10 is a plot of centerline concentration ratio versus distance for the multiple port discharges. Again the effect of aspect ratio is evident with a more rapid decrease in concentration as the number of ports is decreased.

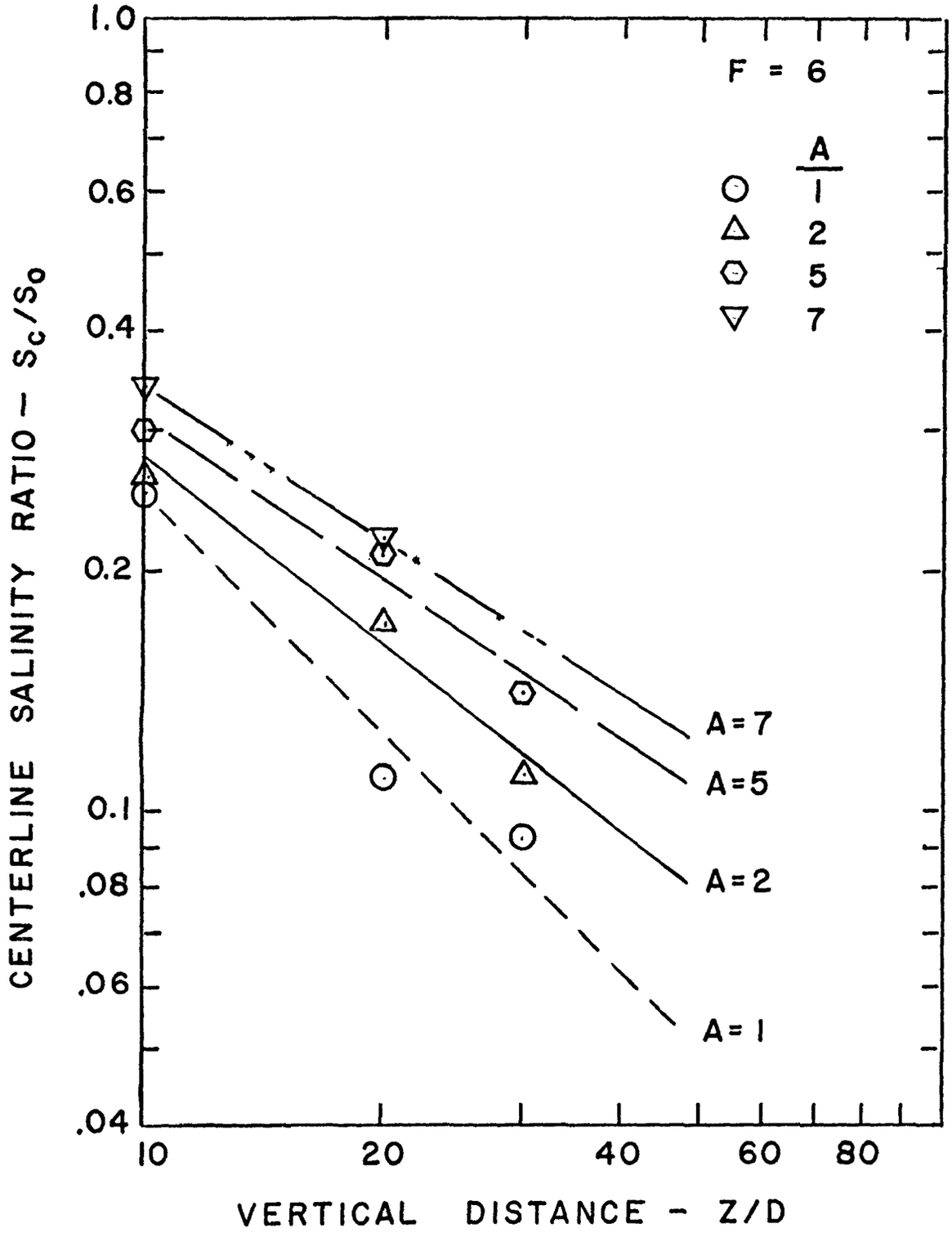

Figure 10. Centerline salinity concentration versus distance for multiple port discharge, $F_o = 6$

REFERENCES

1. Hirst, E. A., "Analysis of Round Turbulent, Buoyant Jets Discharged to Flowing Stratified Ambients," Oak Ridge National Laboratory No. ORNL-4685, 1971.

2. Baumgartner, D. J. and D. S. Trent, "Ocean Outfall Design Part I: Literature Review and Theoretical Development," U.S. Dept. of Interior, Federal Water Quality Administration, 1970.

3. Briggs, G. A., "Plume Rise," AEC Critical Review Series Report, No. TID-25075, 1969.

4. Silberman, E. and H. Stefan, "Physical (Hydraulic) Modeling of Heat Dispersion in Large Lakes, a Review of the State of the Art," University of Minn., St. Anthony Falls Hydraulic Lab., Project Report No. 115, 1970.

5. Schmidt, W., "Turbulente Ausbreitung eines Stromes erhitzter Luft," Zeitschr, Angew. Math. und Mech., Volume 21, 1941.

6. Rouse, H., C. S. Yih, and H. W. Humphreys, "Gravitational Convection from a Boundary Source," Tellus, Volume 4, 1952.

7. Jirka, G and D. R. F. Harleman, "The Mechanics of Submerged Multiport Diffusers for Buoyant Discharges in Shallow Water," MIT Ralph M. Parsons Laboratory for Water Resources and Hydrodynamics, Report No. 169, 1974.

8. Kannberg, L. D. and L. R. Davis, "An Experimental/Analytical Investigation of Deep Submerged Multiple Buoyant Jets," EPA-600/3-76-101, U.S. Environmental Protection Agency, Corvallis, Oregon, Sept. 1976.

9. Sforza, P. M., M. H. Steiger, and N. Trentacoste, "Studies on Three-Dimensional Viscous Jets," AIAA Journal, Vol. 4, No. 5, May 1966.

10. Kotsovinos, N. E., "A Study of the Entrainment and Turbulence in a Plane Buoyant Jet," W. M. Keck Laboratory, California Institute of Technology, Report No. KH-R-32, August 1975.

11. Keeler, R. M., "Mixing and Chemical Reaction to Turbulent Flow Reactors," California University, Livermore, Report No. UCRL-7852, June 1964.

12. McQuivey, R. S., T. N. Keefer, and M. A. Shirazi, "Basic Data Report on the Turbulent Spread of Heat and Matter," U.S. Department of Interior, Geological Survey and the U.S. Environmental Protection Agency, Open file Report, Fort Collins, Colorado, August 1971.

13. Albertson, M. L., Y. B. Dai, R. A. Jensen, and H. Rouse, "Diffusion of Submerged Jets," ASCE Transactions, 115, No. 150, 1950.

14. Becker, H. A., H. C. Hottel, and G. C. Williams, "The Nozzle-Fluid Concentration Field of the Round, Turbulent, Free Jet," Journal of Fluid Mechanics, 32(2),231-252, 1967.

15. Ricou, F. P. and D. B. Spalding, "Measurements of Entrainment by Axisymmetrical Turbulent Jets," Journal of Fluid Mechanics, 11(1), 21-32, August 1961.

16. Morton, B. R., A. G. Taylor, and J. S. Turner, "Turbulent Gravitational Convection from Maintained and Instantaneous Sources," Proceedings of the Royal Society of London, Vol. A234, 1-23, 1956.

17. Fan, L-N., "Turbulent Buoyant Jets into Stratified or Flowing Ambient Fluids," W. M. Keck Laboratory, California Institute of Technology, Report No. KH-R-15, June 1967.

18. Abraham, R., "Entrainment Principle and its Restrictions to Solve Problems of Jets," Journal of Hydraulic Research, 3(2),1-23, 1965.

19. Fox, D. G., "Forced Plume in a Stratified Fluid," Journal of Geophys. Res., 75(33),6818-6835, 1970.

APPENDIX

TABLE A-1 MEASURED DATA

TEST	F0	A	Z/D	X/D	Y/D	U/U0	S/S0
18	999.00	1.00	10.00	0	0	.56	0
18	999.00	1.00	10.00	.42	0	.43	0
18	999.00	1.00	10.00	.83	0	.35	0
18	999.00	1.00	10.00	1.25	0	.20	0
18	999.00	1.00	10.00	1.67	0	.11	0
18	999.00	1.00	10.00	2.50	0	.03	0
18	999.00	1.00	10.00	3.33	0	.02	0
18	999.00	1.00	20.00	0	0	.37	0
18	999.00	1.00	20.00	.83	0	.29	0
18	999.00	1.00	20.00	1.67	0	.17	0
18	999.00	1.00	20.00	2.50	0	.08	0
18	999.00	1.00	20.00	3.33	0	.03	0
18	999.00	1.00	20.00	4.17	0	.01	0
18	999.00	1.00	20.00	5.00	0	.01	0
18	999.00	1.00	20.00	5.83	0	.01	0
18	999.00	1.00	30.00	0	0	.24	0
18	999.00	1.00	30.00	.83	0	.23	0
18	999.00	1.00	30.00	1.67	0	.18	0
18	999.00	1.00	30.00	2.50	0	.12	0
18	999.00	1.00	30.00	3.33	0	.09	0
18	999.00	1.00	30.00	4.17	0	.05	0
18	999.00	1.00	30.00	5.00	0	.03	0
18	999.00	1.00	30.00	5.83	0	.02	0
18	999.00	1.00	40.00	0	0	.17	0
18	999.00	1.00	40.00	1.67	0	.14	0
18	999.00	1.00	40.00	3.33	0	.08	0
18	999.00	1.00	40.00	5.00	0	.04	0
18	999.00	1.00	40.00	6.67	0	.01	0
18	999.00	1.00	40.00	8.33	0	.01	0
18	999.00	1.00	40.00	10.00	0	.00	0
17	999.00	1.00	.09	0	0	1.30	0
17	999.00	1.00	.09	.43	0	1.27	0
17	999.00	1.00	.09	.49	0	.12	0
17	999.00	1.00	5.00	0	0	.81	0
17	999.00	1.00	5.00	.43	0	.59	0
17	999.00	1.00	5.00	.86	0	.37	0
17	999.00	1.00	5.00	1.29	0	.11	0
17	999.00	1.00	5.00	1.72	0	.02	0
17	999.00	1.00	7.00	0	0	.65	0
17	999.00	1.00	7.00	.43	0	.59	0
17	999.00	1.00	7.00	.86	0	.33	0
17	999.00	1.00	7.00	1.29	0	.17	0
17	999.00	1.00	7.00	1.72	0	.10	0
17	999.00	1.00	7.00	2.15	0	.04	0
17	999.00	1.00	7.00	2.58	0	.02	0
17	999.00	1.00	10.00	0	0	.52	0

(Continued)

TABLE A-1 (continued)

TEST	F0	A	Z/D	X/D	Y/D	U/U0	S/S0
17	999.00	1.00	10.00	.43	0	.46	0
17	999.00	1.00	10.00	.86	0	.34	0
17	999.00	1.00	10.00	1.29	0	.25	0
17	999.00	1.00	10.00	1.72	0	.12	0
17	999.00	1.00	10.00	2.15	0	.05	0
17	999.00	1.00	10.00	2.58	0	.01	0
17	999.00	1.00	15.00	0	0	.34	0
17	999.00	1.00	15.00	.43	0	.29	0
17	999.00	1.00	15.00	.86	0	.29	0
17	999.00	1.00	15.00	1.29	0	.23	0
17	999.00	1.00	15.00	1.72	0	.15	0
17	999.00	1.00	15.00	2.15	0	.15	0
17	999.00	1.00	15.00	2.58	0	.09	0
17	999.00	1.00	15.00	3.00	0	.03	0
17	999.00	1.00	15.00	3.43	0	.03	0
17	999.00	1.00	15.00	4.29	0	.01	0
12	36.00	1.00	25.00	0	0	.29	.15
12	36.00	1.00	25.00	.86	0	.28	.15
12	36.00	1.00	25.00	1.72	0	.15	.09
12	36.00	1.00	25.00	2.59	0	.12	.09
12	36.00	1.00	25.00	3.45	0	.09	.08
12	36.00	1.00	25.00	4.31	0	.05	.06
12	36.00	1.00	25.00	5.17	0	.02	.06
12	36.00	1.00	25.00	6.03	0	.02	.05
12	36.00	1.00	37.00	0	0	.22	.11
12	36.00	1.00	37.00	.86	0	.19	.09
12	36.00	1.00	37.00	1.72	0	.16	.08
12	36.00	1.00	37.00	2.59	0	.11	.05
12	36.00	1.00	37.00	3.45	0	.11	.05
12	36.00	1.00	37.00	4.31	0	.08	.06
12	36.00	1.00	37.00	5.17	0	.07	.05
12	36.00	1.00	37.00	6.03	0	.03	.05
12	36.00	1.00	37.00	6.90	0	.03	.05
12	36.00	1.00	37.00	7.76	0	.02	.06
16	36.00	1.00	37.00	0	0	.20	.08
16	36.00	1.00	37.00	1.72	0	.17	.08
16	36.00	1.00	37.00	3.45	0	.13	.07
16	36.00	1.00	37.00	5.17	0	.09	.04
16	36.00	1.00	37.00	6.90	0	.03	.01
11	8.30	1.00	20.00	0	0	.39	.18
11	8.30	1.00	20.00	.86	0	.37	.17
11	8.30	1.00	20.00	1.72	0	.24	.11
11	8.30	1.00	20.00	2.58	0	.18	.08
11	8.30	1.00	20.00	3.43	0	.09	.03
11	8.30	1.00	20.00	4.29	0	.07	0
9	8.30	1.00	10.00	0	0	.64	.33

(continued)

TABLE A-1 (continued)

TEST	F0	A	Z/D	X/D	Y/D	U/U0	S/S0
9	8.30	1.00	10.00	.43	0	.60	.30
9	8.30	1.00	10.00	.86	0	.41	.24
9	8.30	1.00	10.00	1.29	0	.27	.17
9	8.30	1.00	10.00	1.72	0	.16	.13
9	8.30	1.00	10.00	2.15	0	.09	.11
9	8.30	1.00	10.00	2.58	0	.06	.09
10	8.30	1.00	5.00	0	0	1.29	.56
10	8.30	1.00	5.00	.43	0	1.05	.48
10	8.30	1.00	5.00	.86	0	.35	.19
10	8.30	1.00	5.00	1.29	0	.13	.08
10	8.30	1.00	5.00	1.72	0	.07	.02
10	8.30	1.00	5.00	2.15	0	.06	.01
10	8.30	1.00	5.00	2.58	0	.05	.01
5	2.20	1.00	.09	0	0	1.66	.91
5	2.20	1.00	.09	.26	0	1.76	.80
5	2.20	1.00	.09	.52	0	.45	.20
5	2.20	1.00	1.00	0	0	1.72	.64
5	2.20	1.00	1.00	.26	0	1.58	.55
5	2.20	1.00	1.00	.52	0	.82	.42
5	2.20	1.00	1.00	.79	0	.23	.13
5	2.20	1.00	1.00	1.05	0	.14	.07
5	2.20	1.00	3.00	0	0	1.27	.47
5	2.20	1.00	3.00	.39	0	.96	.42
5	2.20	1.00	3.00	.79	0	.42	.17
5	2.20	1.00	3.00	1.18	0	.22	.14
5	2.20	1.00	3.00	1.58	0	.07	.12
5	2.20	1.00	10.00	0	0	.65	.22
5	2.20	1.00	10.00	.52	0	.60	.21
5	2.20	1.00	10.00	1.05	0	.44	.17
5	2.20	1.00	10.00	1.58	0	.25	.14
5	2.20	1.00	10.00	2.10	0	.14	.12
1	3.10	1.00	10.00	0	0	.84	0
1	3.10	1.00	10.00	.37	0	.69	0
1	3.10	1.00	10.00	.74	0	.67	0
1	3.10	1.00	10.00	1.11	0	.53	0
1	3.10	1.00	10.00	1.45	0	.32	0
1	3.10	1.00	10.00	1.85	0	.29	0
1	3.10	1.00	10.00	2.22	0	.12	0
1	3.10	1.00	10.00	2.95	0	.05	0
1	3.10	1.00	20.00	0	0	.69	0
1	3.10	1.00	20.00	.74	0	.54	0
1	3.10	1.00	20.00	1.48	0	.28	0
1	3.10	1.00	20.00	2.22	0	.19	0
1	3.10	1.00	20.00	2.96	0	.17	0
1	3.10	1.00	20.00	3.70	0	.08	0
1	3.10	1.00	20.00	4.40	0	.08	0
1	3.10	1.00	20.00	6.67	0	.06	0

TABLE A-1 (continued)

TEST	F0	A	Z/D	X/D	Y/D	U/U0	S/S0
1	3.10	1.00	25.00	0	0	.54	0
1	3.10	1.00	25.00	.74	0	.54	0
1	3.10	1.00	25.00	1.48	0	.52	0
1	3.10	1.00	25.00	2.22	0	.45	0
1	3.10	1.00	25.00	2.96	0	.40	0
1	3.10	1.00	25.00	3.70	0	.33	0
1	3.10	1.00	25.00	4.40	0	.21	0
1	3.10	1.00	25.00	5.19	0	.09	0
1	3.10	1.00	25.00	5.93	0	.05	0
2	1.50	1.00	10.00	0	0	1.08	0
2	1.50	1.00	10.00	.37	0	1.03	0
2	1.50	1.00	10.00	.74	0	.61	0
2	1.50	1.00	10.00	1.11	0	.62	0
2	1.50	1.00	10.00	1.85	0	.19	0
2	1.50	1.00	10.00	2.59	0	.09	0
2	1.50	1.00	10.00	3.33	0	.08	0
2	1.50	1.00	20.00	0	0	1.04	0
2	1.50	1.00	20.00	.74	0	.99	0
2	1.50	1.00	20.00	1.48	0	.73	0
2	1.50	1.00	20.00	2.22	0	.55	0
2	1.50	1.00	20.00	2.96	0	.32	0
2	1.50	1.00	20.00	3.70	0	.14	0
2	1.50	1.00	20.00	4.44	0	.10	0
2	1.50	1.00	20.00	5.19	0	.09	0
2	1.50	1.00	25.00	0	0	1.04	0
2	1.50	1.00	25.00	.74	0	.95	0
2	1.50	1.00	25.00	1.48	0	.85	0
2	1.50	1.00	25.00	2.22	0	.57	0
2	1.50	1.00	25.00	2.96	0	.36	0
2	1.50	1.00	25.00	3.70	0	.19	0
2	1.50	1.00	25.00	4.40	0	.12	0
2	1.50	1.00	25.00	5.19	0	.09	0
2	1.50	1.00	30.00	0	0	.95	0
2	1.50	1.00	30.00	.70	0	.90	0
2	1.50	1.00	30.00	1.48	0	.85	0
2	1.50	1.00	30.00	2.22	0	.80	0
2	1.50	1.00	30.00	2.96	0	.70	0
2	1.50	1.00	30.00	4.40	0	.38	0
2	1.50	1.00	30.00	5.93	0	.13	0
20	6.00	2.00	10.00	0	0	.58	.26
20	6.00	2.00	10.00	.52	0	.03	.25
20	6.00	2.00	10.00	1.05	0	.56	.19
20	6.00	2.00	10.00	1.57	0	.45	.10
20	6.00	2.00	10.00	2.10	0	.22	.05
20	6.00	2.00	10.00	2.62	0	0	0
20	6.00	2.00	10.00	3.15	0	.07	.00

(continued)

TABLE A-1 (continued)

TEST	F0	A	Z/D	X/D	Y/D	U/U0	S/S0
20	6.00	2.00	10.00	0	0	.58	.17
20	6.00	2.00	10.00	.52	0	.53	.16
20	6.00	2.00	10.00	1.05	0	.47	.12
20	6.00	2.00	10.00	1.57	0	0	0
20	6.00	2.00	10.00	2.10	0	.17	.06
20	6.00	2.00	10.00	2.62	0	0	0
20	6.00	2.00	10.00	3.15	0	.07	0
20	6.00	2.00	10.00	0	0	.47	.13
20	6.00	2.00	10.00	.52	0	.41	.12
20	6.00	2.00	10.00	1.05	0	.30	.00
20	6.00	2.00	10.00	1.57	0	0	0
20	6.00	2.00	10.00	2.10	0	.14	.04
20	6.00	2.00	10.00	2.62	0	0	0
20	6.00	2.00	10.00	3.15	0	.02	0
20	6.00	2.00	10.00	0	0	.32	.07
20	6.00	2.00	10.00	.52	0	0	0
20	6.00	2.00	10.00	1.05	0	.26	.05
20	6.00	2.00	10.00	1.57	0	0	0
20	6.00	2.00	10.00	2.10	0	.08	.01
20	6.00	2.00	10.00	2.62	0	0	0
20	6.00	2.00	10.00	3.15	0	0	0
20	6.00	2.00	10.00	0	0	.18	.03
20	6.00	2.00	10.00	.52	0	0	0
20	6.00	2.00	10.00	1.05	0	.11	.01
20	6.00	2.00	10.00	1.57	0	0	0
20	6.00	2.00	10.00	2.10	0	0	0
20	6.00	2.00	10.00	0	0	.03	.00
21	6.00	2.00	21.00	0	0	.03	.17
21	6.00	2.00	21.00	2.10	0	.39	.10
21	6.00	2.00	21.00	3.15	0	.27	.06
21	6.00	2.00	21.00	4.20	0	.14	.03
21	6.00	2.00	21.00	5.25	0	.08	.02
21	6.00	2.00	20.00	6.30	0	.01	.00
21	6.00	2.00	20.00	0	1.05	.39	.13
21	6.00	2.00	20.00	1.05	1.05	.41	.12
21	6.00	2.00	20.00	2.10	1.05	.38	.09
21	6.00	2.00	20.00	3.15	1.05	.24	.04
21	6.00	2.00	20.00	4.20	1.05	.15	.02
21	6.00	2.00	20.00	5.25	1.05	.05	.01
21	6.00	2.00	20.00	6.30	1.05	.01	.00
21	6.00	2.00	20.00	0	2.10	.24	.06
21	6.00	2.00	20.00	1.05	2.10	.22	.05
21	6.00	2.00	20.00	2.10	2.10	.18	.04
21	6.00	2.00	20.00	3.15	2.10	.15	.03
21	6.00	2.00	20.00	4.20	2.10	.05	.01
21	6.00	2.00	20.00	5.25	2.10	0	0

(continued)

TABLE A-1 (continued)

TEST	F0	A	Z/D	X/D	Y/D	U/U0	S/S0
21	6.00	2.00	20.00	6.30	2.10	0	0
21	6.00	2.00	20.00	0	3.15	.12	.05
21	6.00	2.00	20.00	1.05	3.15	.08	.03
21	6.00	2.00	20.00	2.10	3.15	.06	.02
21	6.00	2.00	20.00	3.15	3.15	.03	.01
21	6.00	2.00	20.00	4.20	3.15	0	0
21	6.00	2.00	20.00	5.25	3.15	0	0
21	6.00	2.00	20.00	6.30	3.15	0	0
21	6.00	2.00	20.00	0	4.20	.04	.02
21	6.00	2.00	20.00	1.05	4.20	.02	.01
22	6.00	2.00	30.00	0	0	.49	.11
22	6.00	2.00	30.00	5.25	1.05	.08	.01
22	6.00	2.00	30.00	6.30	1.05	.05	.01
22	6.00	2.00	30.00	0	2.10	.38	.03
22	6.00	2.00	30.00	0	2.10	0	0
22	6.00	2.00	30.00	1.05	2.10	.28	.05
22	6.00	2.00	30.00	2.10	2.10	.24	.03
22	6.00	2.00	30.00	3.15	2.10	.19	.02
22	6.00	2.00	30.00	4.20	2.10	.15	.01
22	6.00	2.00	30.00	5.25	2.10	.08	.01
22	6.00	2.00	30.00	6.30	2.10	.01	0
22	6.00	2.00	30.00	0	3.15	.22	.03
22	6.00	2.00	30.00	1.05	3.15	.21	.03
22	6.00	2.00	30.00	2.10	3.15	.20	.03
22	6.00	2.00	30.00	3.15	3.15	.13	.02
22	6.00	2.00	30.00	4.20	3.15	.10	.02
22	6.00	2.00	30.00	5.25	3.15	.02	.00
22	6.00	2.00	30.00	0	4.20	.20	.02
22	6.00	2.00	30.00	1.05	4.20	.18	.02
22	6.00	2.00	30.00	2.10	4.20	.11	.02
22	6.00	2.00	30.00	3.15	4.20	.02	.01
22	6.00	2.00	30.00	0	5.25	.07	.01
22	6.00	2.00	30.00	1.05	5.25	.06	.01
22	6.00	2.00	30.00	2.10	5.25	.01	0
22	6.00	2.00	30.00	0	6.30	.02	.00
23	6.00	5.00	20.00	0	0	.67	.21
23	6.00	5.00	20.00	1.05	0	.67	.19
23	6.00	5.00	20.00	2.10	0	.65	.11
23	6.00	5.00	20.00	3.15	0	.51	.12
23	6.00	5.00	20.00	4.20	0	.24	.06
23	6.00	5.00	20.00	5.25	0	.11	.03
23	6.00	5.00	20.00	6.30	0	.07	.01
23	6.00	5.00	20.00	7.34	0	.04	.01
23	6.00	5.00	20.00	0	1.05	.65	.21
23	6.00	5.00	20.00	1.05	1.05	.65	.21
23	6.00	5.00	20.00	2.10	1.05	.60	.17

(continued)

TABLE A-1 (continued)

TEST	F0	A	Z/D	X/D	Y/D	U/U0	S/S0
23	6.00	5.00	20.00	3.15	1.05	.38	.12
23	6.00	5.00	20.00	4.20	1.05	.22	.06
23	6.00	5.00	20.00	5.25	1.05	.10	.02
23	6.00	5.00	20.00	6.30	1.05	.06	.01
23	6.00	5.00	20.00	7.34	1.05	.03	.00
23	6.00	5.00	20.00	0	2.10	.58	.21
23	6.00	5.00	20.00	1.05	2.10	.55	.20
23	6.00	5.00	20.00	2.10	2.10	.39	.15
23	6.00	5.00	20.00	3.15	2.10	.21	.09
23	6.00	5.00	20.00	4.20	2.10	.06	.02
23	6.00	5.00	20.00	5.25	2.10	.01	.00
23	6.00	5.00	20.00	0	3.15	.38	.09
23	6.00	5.00	20.00	1.05	3.15	.03	.09
23	6.00	5.00	20.00	2.10	3.15	.26	.08
23	6.00	5.00	20.00	3.15	3.15	.22	.04
23	6.00	5.00	20.00	4.20	3.15	.07	.01
23	6.00	5.00	20.00	5.25	3.15	.05	.00
23	6.00	5.00	20.00	0	4.20	.10	.06
23	6.00	5.00	20.00	1.05	4.20	.11	.04
23	6.00	5.00	20.00	2.10	4.20	.09	.03
23	6.00	5.00	20.00	3.15	4.20	.05	.01
23	6.00	5.00	20.00	0	5.25	.02	.00
24	6.00	5.00	10.00	0	0	.60	.30
24	6.00	5.00	10.00	1.05	0	.60	.32
24	6.00	5.00	10.00	2.10	0	.60	.28
24	6.00	5.00	10.00	3.15	0	.38	.14
24	6.00	5.00	10.00	4.20	0	.05	.02
24	6.00	5.00	10.00	0	1.05	.36	.28
24	6.00	5.00	10.00	1.05	1.05	.36	.28
24	6.00	5.00	10.00	2.10	1.05	.36	.25
24	6.00	5.00	10.00	3.15	1.05	.24	.17
24	6.00	5.00	10.00	4.20	1.05	.04	.02
24	6.00	5.00	10.00	0	2.10	.07	.06
24	6.00	5.00	10.00	1.05	2.10	.07	.08
24	6.00	5.00	10.00	2.10	2.10	.07	.06
24	6.00	5.00	10.00	3.15	2.10	.02	.03
24	6.00	5.00	10.00	4.20	2.10	0	.01
24	6.00	5.00	10.00	0	3.15	.02	.00
25	7.00	3.00	30.00	0	0	.45	.14
25	7.00	3.00	30.00	1.05	0	.43	.11
25	7.00	3.00	30.00	2.10	0	.33	.08
25	7.00	3.00	30.00	3.15	0	.25	.06
25	7.00	3.00	30.00	4.20	0	.16	.04
25	7.00	3.00	30.00	5.25	0	.09	.02
25	7.00	3.00	30.00	6.30	0	.01	.01
25	7.00	3.00	30.00	0	1.05	.45	.11

(continued)

TABLE A-1 (continued)

TEST	F0	A	Z/D	X/D	Y/D	U/U0	S/S0
25	7.00	3.00	30.00	1.05	1.05	.40	.10
25	7.00	3.00	30.00	2.10	1.05	.27	.08
25	7.00	3.00	30.00	3.15	1.05	.18	.05
25	7.00	3.00	30.00	4.20	1.05	.11	.03
25	7.00	3.00	30.00	5.25	1.05	.06	.01
25	7.00	3.00	30.00	6.30	1.05	.01	.00
25	7.00	3.00	30.00	0	2.10	.38	.10
25	7.00	3.00	30.00	1.05	2.10	.35	.08
25	7.00	3.00	30.00	2.10	2.10	.27	.06
25	7.00	3.00	30.00	3.15	2.10	.16	.04
25	7.00	3.00	30.00	4.20	2.10	.09	.02
25	7.00	3.00	30.00	5.25	2.10	.03	.01
25	7.00	3.00	30.00	0	3.15	.25	.08
25	7.00	3.00	30.00	1.05	3.15	.22	.06
25	7.00	3.00	30.00	2.10	3.15	.16	.04
25	7.00	3.00	30.00	3.15	3.15	.09	.04
25	7.00	3.00	30.00	4.20	3.15	.04	.03
25	7.00	3.00	30.00	5.25	3.15	.01	.01
25	7.00	3.00	30.00	0	4.20	.19	.05
25	7.00	3.00	30.00	1.05	4.20	.18	.04
25	7.00	3.00	30.00	2.10	4.20	.10	.03
25	7.00	3.00	30.00	3.15	4.20	.04	.02
25	7.00	3.00	30.00	4.20	4.20	.00	.01
25	7.00	3.00	30.00	0	5.25	.15	.02
25	7.00	3.00	30.00	1.05	5.25	.12	.01
25	7.00	3.00	30.00	2.10	5.25	.04	.01
25	7.00	3.00	30.00	3.15	5.25	.00	.01
25	7.00	3.00	30.00	0	6.30	.07	.01
25	7.00	3.00	30.00	1.05	6.30	.04	.01
25	7.00	3.00	30.00	2.10	6.30	.01	.01
25	7.00	3.00	30.00	0	7.34	.02	.00
26	7.00	3.00	20.00	0	0	.55	.21
26	7.00	3.00	20.00	1.05	0	.53	.16
26	7.00	3.00	20.00	2.10	0	.41	.11
26	7.00	3.00	20.00	3.15	0	.24	.05
26	7.00	3.00	20.00	4.20	0	.07	.03
26	7.00	3.00	20.00	5.25	0	.18	.01
26	7.00	3.00	20.00	0	1.05	.49	.19
26	7.00	3.00	20.00	1.05	1.05	.49	.19
26	7.00	3.00	20.00	2.10	1.05	.39	.11
26	7.00	3.00	20.00	3.15	1.05	.22	.06
26	7.00	3.00	20.00	4.20	1.05	.08	.02
26	7.00	3.00	20.00	5.25	1.05	.03	.01
26	7.00	3.00	20.00	0	2.10	.36	.13
26	7.00	3.00	20.00	1.05	2.10	.34	.13
26	7.00	3.00	20.00	2.10	2.10	.33	.11

(continued)

TABLE A-1 (continued)

TEST	F0	A	Z/D	X/D	Y/D	U/U0	S/S0
26	7.00	3.00	20.00	3.15	2.10	.16	.04
26	7.00	3.00	20.00	4.20	2.10	.03	.01
26	7.00	3.00	20.00	0	3.15	.29	.08
26	7.00	3.00	20.00	1.05	3.15	.19	.06
26	7.00	3.00	20.00	2.10	3.15	.09	.03
26	7.00	3.00	20.00	3.15	3.15	.03	.00
26	7.00	3.00	20.00	0	4.20	.13	.08
26	7.00	3.00	20.00	1.05	4.20	.10	.05
26	7.00	3.00	20.00	2.10	4.20	.04	.03
26	7.00	3.00	20.00	0	5.25	.06	.02
27	7.00	3.00	10.00	0	0	.58	.26
27	7.00	3.00	10.00	1.05	0	.56	.26
27	7.00	3.00	10.00	2.10	0	.40	.16
27	7.00	3.00	10.00	3.15	0	.05	.02
27	7.00	3.00	10.00	0	1.05	.47	.24
27	7.00	3.00	10.00	1.05	1.05	.47	.24
27	7.00	3.00	10.00	2.10	1.05	.39	.17
27	7.00	3.00	10.00	3.15	1.05	.06	.03
27	7.00	3.00	10.00	0	2.10	.18	.10
27	7.00	3.00	10.00	1.05	2.10	.13	.08
27	7.00	3.00	10.00	2.10	2.10	.11	.08
27	7.00	3.00	10.00	3.15	2.10	.02	.03
27	7.00	3.00	10.00	0	3.15	.02	.03
27	7.00	3.00	10.00	1.05	3.15	.02	.03
27	7.00	3.00	10.00	2.10	3.15	.01	.01
28	6.40	7.00	20.00	0	0	.58	.21
28	6.00	7.00	20.00	1.05	0	.58	.23
28	6.00	7.00	20.00	2.10	0	.58	.23
28	6.00	7.00	20.00	3.15	0	.51	.23
28	6.00	7.00	20.00	4.20	0	.41	.18
28	6.00	7.00	20.00	5.25	0	.33	.13
28	6.00	7.00	20.00	6.30	0	.25	.09
28	6.00	7.00	20.00	7.34	0	.06	.03
28	6.00	7.00	20.00	8.40	0	.03	.01
28	6.00	7.00	20.00	0	1.05	.56	.20
28	6.00	7.00	20.00	1.05	1.05	.56	.19
28	7.00	7.00	20.00	2.10	1.05	.54	.18
28	7.00	7.00	20.00	3.15	1.05	.51	.15
28	7.00	7.00	20.00	4.20	1.05	.41	.13
28	7.00	7.00	20.00	5.25	1.05	.33	.11
28	7.00	7.00	20.00	6.30	1.05	.24	.06
28	7.00	7.00	20.00	7.34	1.05	.11	.03
28	7.00	7.00	20.00	8.40	1.05	.03	.00
28	7.00	7.00	20.00	0	2.10	.26	.15
28	7.00	7.00	20.00	1.05	2.10	.25	.13
28	7.00	7.00	20.00	2.10	2.10	.21	.18

(continued)

TABLE A-1 (continued)

TEST	F0	A	Z/D	X/D	Y/D	U/U0	S/S0
28	7.00	7.00	20.00	3.15	2.10	.16	.18
28	7.00	7.00	20.00	4.20	2.10	.11	.08
28	7.00	7.00	20.00	5.25	2.10	.11	.08
28	7.00	7.00	20.00	6.30	2.10	.06	.05
28	7.00	7.00	20.00	7.34	2.10	.04	.03
28	7.00	7.00	20.00	8.40	2.10	.01	.02
28	7.00	7.00	20.00	0	3.15	.21	.08
28	7.00	7.00	20.00	1.05	3.15	.10	.08
28	7.00	7.00	20.00	2.10	3.15	.12	.06
28	7.00	7.00	20.00	3.15	3.15	.12	.06
28	7.00	7.00	20.00	4.20	3.15	.07	.06
28	7.00	7.00	20.00	5.25	3.15	.06	.03
28	7.00	7.00	20.00	6.30	3.15	.03	.01
28	7.00	7.00	20.00	0	4.20	.05	.03
28	7.00	7.00	20.00	1.05	4.20	.05	.02
29	5.10	5.00	30.00	0	0	.71	.13
29	5.10	5.00	30.00	1.05	0	.01	.13
29	5.10	5.00	30.00	2.10	0	.63	.13
29	5.10	5.00	30.00	3.15	0	.46	.08
29	5.10	5.00	30.00	4.20	0	.29	.05
29	5.10	5.00	30.00	5.25	0	.20	.03
29	5.10	5.00	30.00	6.30	0	.04	.01
29	5.10	5.00	30.00	0	1.05	.63	.13
29	5.10	5.00	30.00	1.05	1.05	.63	.12
29	5.10	5.00	30.00	2.10	1.05	.58	.12
29	5.10	5.00	30.00	3.15	1.05	.41	.08
29	5.10	5.00	30.00	4.20	1.05	.26	.04
29	5.10	5.00	30.00	5.25	1.05	.17	.03
29	5.10	5.00	30.00	6.30	1.05	.04	.00
29	5.10	5.00	30.00	0	2.10	.51	.12
29	5.10	5.00	30.00	1.05	2.10	.45	.12
29	5.10	5.00	30.00	2.10	2.10	.42	.09
29	5.10	5.00	30.00	3.15	2.10	.33	.07
29	5.10	5.00	30.00	4.20	2.10	.18	.04
29	5.10	5.00	30.00	5.25	2.10	.07	.01
29	5.10	5.00	30.00	0	3.15	.43	.10
29	5.10	5.00	30.00	1.05	3.15	.39	.09
29	5.10	5.00	30.00	2.10	3.15	.36	.08
29	5.10	5.00	30.00	3.15	3.15	.29	.05
29	5.10	5.00	30.00	4.20	3.15	.16	.03
29	5.10	5.00	30.00	5.25	3.15	.06	.01
29	5.10	5.00	30.00	0	4.20	.36	.08
29	5.10	5.00	30.00	1.05	4.20	.36	.07
29	5.10	5.00	30.00	2.10	4.20	.30	.06
29	5.10	5.00	30.00	3.15	4.20	.26	.04
29	5.10	5.00	30.00	4.20	4.20	.16	.03

(continued)

TABLE A-1 (continued)

TEST	F0	A	Z/D	X/D	Y/D	U/U0	S/S0
29	5.10	5.00	30.00	5.25	4.20	.05	0
29	5.10	5.00	30.00	0	5.25	.15	.05
29	5.10	5.00	30.00	1.05	5.25	.14	.04
29	5.10	5.00	30.00	2.10	5.25	.14	.03
29	5.10	5.00	30.00	3.15	5.25	.11	.02
29	5.10	5.00	30.00	4.20	5.25	.04	0
29	5.10	5.00	30.00	0	6.30	.04	0
30	6.00	99.00	30.00	0	0	.37	.12
30	6.00	99.00	30.00	0	0	0	0
30	6.00	99.00	30.00	1.05	0	.39	.12
30	6.00	99.00	30.00	2.10	0	.34	.10
30	6.00	99.00	30.00	4.20	0	.30	.06
30	6.00	99.00	30.00	6.30	0	.24	0
30	6.00	99.00	30.00	10.49	0	.04	0
30	6.00	99.00	30.00	7.34	0	.06	.03
30	6.00	99.00	30.00	5.25	0	.15	.04
30	6.00	99.00	30.00	3.15	0	.32	.10
31	6.00	99.00	20.00	0	0	.51	.16
31	6.00	99.00	20.00	1.05	0	.48	.15
31	6.00	99.00	20.00	2.10	0	.32	.13
31	6.00	99.00	20.00	3.15	0	.20	.08
31	6.00	99.00	20.00	4.20	0	.11	.02
31	6.00	99.00	20.00	5.25	0	.08	.01
31	6.00	99.00	20.00	6.30	0	.05	0
31	6.00	99.00	20.00	-1.05	0	0	0
31	6.00	99.00	20.00	8.40	0	0	0
32	6.00	99.00	10.00	-0.52	0	.61	0
32	6.00	99.00	10.00	0	0	.71	.34
32	6.00	99.00	10.00	.52	0	.61	.31
32	6.00	99.00	10.00	1.05	0	.36	.20
32	6.00	99.00	10.00	1.57	0	.22	.13
32	6.00	99.00	10.00	2.10	0	.12	.06
32	6.00	99.00	10.00	3.15	0	.08	0
32	6.00	99.00	10.00	2.62	0	0	.01
33	6.00	7.00	10.00	0	0	.62	.34
33	6.00	7.00	10.00	1.05	0	.62	.34
33	6.00	7.00	10.00	2.10	0	.62	.34
33	6.00	7.00	10.00	3.15	0	.55	.32
33	6.00	7.00	10.00	4.20	0	.42	.19
33	6.00	7.00	10.00	5.25	0	.13	.09
33	6.00	7.00	10.00	6.30	0	.02	.01
33	6.00	7.00	10.00	0	.52	.55	.30
33	6.00	7.00	10.00	1.05	.52	.55	.34
33	6.00	7.00	10.00	2.10	.52	.54	.34
33	6.00	7.00	10.00	3.15	.52	.51	.34
33	6.00	7.00	10.00	4.20	.52	.42	.21

(continued)

TABLE A-1 (continued)

TEST	F0	A	Z/D	X/D	Y/D	U/U0	S/S0
33	6.00	7.00	10.00	5.25	.52	.13	.06
33	6.00	7.00	10.00	6.30	.52	.01	.01
33	6.00	7.00	10.00	0	1.05	.45	.32
33	6.00	7.00	10.00	1.05	1.05	.45	.32
33	6.00	7.00	10.00	2.10	1.05	.45	.34
33	6.00	7.00	10.00	3.15	1.05	.45	.29
33	6.00	7.00	10.00	4.20	1.05	.44	.21
33	6.00	7.00	10.00	5.25	1.05	.17	.11
33	6.00	7.00	10.00	6.30	1.05	.02	.01
33	6.00	7.00	10.00	0	2.10	.14	.13
33	6.00	7.00	10.00	1.05	2.10	.11	.13
33	6.00	7.00	10.00	2.10	2.10	.10	.13
33	6.00	7.00	10.00	3.15	2.10	.12	.13
33	6.00	7.00	10.00	4.20	2.10	.10	.11
33	6.00	7.00	10.00	5.25	2.10	.04	.05
33	6.00	7.00	10.00	6.30	2.10	.04	.03
33	6.00	7.00	10.00	0	3.15	.05	.60
33	6.00	7.00	10.00	1.05	3.15	.02	.40
33	6.00	7.00	10.00	2.10	3.15	.02	.20
33	6.00	7.00	10.00	3.15	3.15	.02	.10
33	6.00	7.00	10.00	4.20	3.15	.02	.10
33	6.00	7.00	10.00	5.25	3.15	.01	.01
33	6.00	7.00	10.00	0	4.20	.03	.01
34	6.00	1.00	10.00	0	0	.60	.17
34	6.00	1.00	10.00	.52	0	.51	.13
34	6.00	1.00	10.00	1.05	0	.34	.12
34	6.00	1.00	10.00	1.57	0	.16	.08
34	6.00	1.00	10.00	2.10	0	.11	.06
34	6.00	1.00	10.00	2.62	0	.04	.04
34	6.00	1.00	10.00	3.15	0	.01	.03
35	3.50	1.00	10.00	0	0	.63	.22
35	3.50	1.00	10.00	.37	0	.61	.20
35	3.50	1.00	10.00	.75	0	.46	.15
35	3.50	1.00	10.00	1.12	0	.33	.10
35	3.50	1.00	10.00	1.49	0	.24	.10
35	3.50	1.00	10.00	2.24	0	.10	.02
35	3.50	1.00	10.00	2.99	0	.02	.00
36	3.50	1.00	15.00	.19	0	.48	.15
36	3.50	1.00	15.00	.56	0	.48	.14
36	3.50	1.00	15.00	.93	0	.43	.12
36	3.50	1.00	15.00	1.31	0	.34	.10
36	3.50	1.00	15.00	1.68	0	.30	.07
36	3.50	1.00	15.00	2.05	0	.20	.04
36	3.50	1.00	15.00	2.80	0	.04	.02
37	3.50	1.00	20.00	0	0	.52	.11
37	3.50	1.00	20.00	.37	0	.51	.10

(continued)

TECHNICAL REPORT DATA
(Please read Instructions on the reverse before completing)

1. REPORT NO EPA-600/7-77-070	2.	3. RECIPIENT'S ACCESSION NO.
4. TITLE AND SUBTITLE "EXPERIMENTAL SIMULATION OF SINGLE AND MULTIPLE CELL COOLING TOWER PLUMES"		5. REPORT DATE July 1977 6. PERFORMING ORGANIZATION CODE
7. AUTHOR(S) Lorin R. Davis, Mostafa A. Shirazi, and David L. Slegel		8. PERFORMING ORGANIZATION REPORT NO.
9. PERFORMING ORGANIZATION NAME AND ADDRESS Corvallis Environmental Research Laboratory Office of Research & Development U.S. Environmental Protection Agency 200 S.W. 35th Street -- Corvallis, OR 97330		10. PROGRAM ELEMENT NO. EHE675A (AP#) 11. CONTRACT/GRANT NO.
12. SPONSORING AGENCY NAME AND ADDRESS SAME		13. TYPE OF REPORT AND PERIOD COVERED Final Inhouse 7/75-12/76 14. SPONSORING AGENCY CODE EPA/600/02

15. SUPPLEMENTARY NOTES

16. ABSTRACT

An Experimental investigation was conducted to determine the dilution characteristics of single and multiple port buoyant discharges typical of modern natural and mechanical draft cooling towers. Simultaneous measurements of velocity and tracer concentration profiles were taken at various downstream locations in the three-dimensional plumes discharged into a stagnant ambient using a hot film anemometer and conductivity probe. The number of discharge ports was varied from one to seven. Discharge densimetric Froude numbers were varied from 1.5 to infinity. Numerical integration of the profiles gave dilution, tracer conservation, and momentum fluxes. The effect of reducing Froude number was to increase entrainment considerably. In multiple port discharges the shape of the plume changed from an elongated configuration to nearly exisymmetric within the first 20-30 diameters of discharge.

17. KEY WORDS AND DOCUMENT ANALYSIS

a. DESCRIPTORS	b. IDENTIFIERS/OPEN ENDED TERMS	c. COSATI Field/Group
Cooling Towers, Plumes, Air Pollution, Dilution, Dissipation	Multiple cell	13-B

18. DISTRIBUTION STATEMENT Unlimited Distribution	19. SECURITY CLASS *(This Report)* Unclassified	21. NO. OF PAGES 44
	20. SECURITY CLASS *(This page)* Unclassified	22. PRICE

EPA Form 2220-1 (9-73)

☆ U S GOVERNMENT PRINTING OFFICE 1977—798-276/178 REGION 10