EPA-450/2-75-009

STANDARD SUPPORT AND ENVIRONMENTAL IMPACT STATEMENT: EMISSION STANDARD FOR VINYL CHLORIDE

Emission Standards and Engineering Division

U. S. ENVIRONMENTAL PROTECTION AGENCY
Office of Air and Waste Management
Office of Air Quality Planning and Standards
Research Triangle Park, North Carolina 27711

October 1975

This report has been reviewed by the Emission Standards and Engineering Division, Office of Air Quality Planning and Standards, Office of Air and Waste Management, Environmental Protection Agency, and approved for publication. Mention of company or product names does not constitute endorsement by EPA. Copies are available free of charge to Federal employees, current contractors and grantees, and non-profit organizations--as supplies permit--from the Air Pollution Technical Information Center, Environmental Protection Agency, Research Triangle Park, North Carolina 27711; or may be obtained, for a fee, from the National Technical Information Service, 5285 Port Royal Road, Springfield, Virginia 22161.

Publication No. EPA-450/2-75-009

PREFACE

A. PURPOSE OF THIS DOCUMENT

This report summarizes the information obtained during the development of a national emission standard for vinyl chloride under the authority of section 112 of the Clean Air Act. It is being distributed in connection with formal proposal of the standard in the FEDERAL REGISTER. Its purpose is to explain the background, basis, and environmental and economic impacts of the proposal in greater detail than could be included in the FEDERAL REGISTER and to facilitate analysis of the proposal by interested persons, including those who may not be familiar with many of the technical aspects of ethylene dichloride-vinyl chloride and polyvinyl chloride plants.

Contained in this document is information on the industrial sources of vinyl chloride, control technology which can be applied to these sources, the proposed standard and the rationale for its selection, alternative approaches for regulating vinyl chloride, environmental and economic impacts of the proposed standard and alternative control levels, and other Federal or State regulations which apply to vinyl chloride or to plants which emit vinyl chloride. Information on the health effects of vinyl chloride is contained in a second document prepared by EPA, which is entitled the Scientific and Technical Assessment Report on Vinyl Chloride and Polyvinyl Chloride. Copies of both documents may be obtained from Mr. Don R. Goodwin, (MD-13), Director, Emission Standards and Engineering Division, United States Environmental Protection Agency, Research Triangle Park, North Carolina 27711 [(919) 688-8146]. Requests for additional information or for copies of reports (other than published literature) cited in the background documents, and comments on the

proposed standard should be forwarded to the same address.

B. AUTHORITY FOR THE STANDARD

National emission standards for hazardous air pollutants are promulgated in accordance with section 112 of the Clean Air Act (42 U.S.C. 1857c-7), as amended in 1970. "Hazardous air pollutant" is defined in the Act as "an air pollutant to which no ambient air quality standard is applicable and which in the judgment of the Administrator may cause, or contribute to, an increase in mortality or an increase in serious irreversible, or incapacitating reversible, illness." Emission standards established under the authority of section 112 are to be set at a level which in the Administrator's judgment "provides an ample margin of safety to protect the public health from such hazardous air pollutants."

To set a standard under section 112 of the Act, a pollutant must be listed in the FEDERAL REGISTER as a hazardous air pollutant. Within 180 days of listing, the Administrator must propose a national emission standard which, in his judgment, adequately protects public health. Within 30 days of proposal of the standard, the Administrator must give notice of a public hearing. The Administrator can withdraw a pollutant from the hazardous list only if he finds, on the basis of information presented at the public hearing, that the pollutant clearly is not hazardous. Otherwise the Administrator must promulgate a standard within 180 days of the proposal. The Act does not require that the Administrator consider available control technology or economic impact in establishing the level of the standard.

However, EPA must, from time to time, issue information on control technology.

C. CONSIDERATION OF ENVIRONMENTAL IMPACTS

Section 102(2)(c) of the National Environmental Policy Act (NEPA) of 1969 (PI-91-190) requires Federal agencies to prepare detailed environmental impact statements on proposals for legislation and other major Federal actions significantly affecting the quality of the human environment. The objective of NEPA is to build into the decision-making process of Federal agencies a careful consideration of all environmental aspects of proposed actions. The Energy Supply and Environmental Coordination Act (ESECA) of 1974 (PL-93-319) specifically exempted proposed actions under the Clean Air Act from NEPA requirements. According to section 7(c)(1), "No action taken under the Clean Air Act shall be deemed a major Federal action significantly affecting the quality of the human environment within the meaning of the National Environmental Policy Act of 1969."

EPA has concluded, however, that the preparation of environmental impact statements could have beneficial effects on certain regulatory actions. Consequently, while not legally required to do so as a result of section 102(2)(c) of NEPA, EPA will prepare environmental impact statements for various regulatory actions, including proposed actions under section 112 of the Clean Air Act. This voluntary preparation of environmental impact statements, however, in no way legally subjects EPA to NEPA requirements.

To implement this EPA policy decision, therefore, a separate section is included in this document which is devoted solely to an analysis of the potential environmental impacts associated with the proposed standard and alternative levels of control. Both adverse and beneficial impacts associated with the proposed standard and alternatives in such areas as air and water pollution, increased solid waste disposal and increased energy consumption are identified and discussed. Generally, standards proposed under section 112 will most likely have beneficial impacts on ambient air quality and potential adverse impacts in other areas.

D. CONSIDERATION OF INFLATIONARY IMPACTS

Executive Order 11821 (39 FR 41501, November 29, 1974) requires all Executive agencies to issue inflation impact statements when enacting major regulations or rules and when submitting proposals for major legislation. In accordance with the executive order, a separate chapter is included in this document which describes in detail the economic impact of the proposed standard for vinyl chloride and alternative levels of control. The economic analysis includes to the extent possible the impact of other regulations on the industries which would be affected by the proposed standard. Figures are given for both the capital and annual operating costs to the industries of installing and implementing the necessary control equipment to meet the proposed standard and other regulations. The potential plant closures and price increases in consumer goods which would occur as a result of these costs to the industries are also estimated.

Draft Standard Support and Environmental Impact Statement

Vinyl Chloride Emissions from Ethylene Dichloride-

Vinyl Chloride and Polyvinyl Chloride Plants

Type of Action: Administrative

Prepared by

Don R. Goodwin ---------- 10/24/75

Director, Emission Standards and Engineering Division (Date)
Environmental Protection Agency
Research Triangle Park, N. C. 27711

Approved by

Roger Strelow ---------- NOV 21 1975

Assistant Administrator (Date)
Office of Air and Waste Management
Environmental Protection Agency
401 M Street, S. W.
Washington, D. C. 20460

Draft Statement Submitted to Council on Environmental Quality

on

(Date)

Additional copies may be obtained or reviewed at:

Emission Standards and Engineering Division
Office of Air Quality Planning and Standards
Environmental Protection Agency
Research Triangle Park, N. C. 27711

Public Information Reference Unit
Environmental Protection Agency
Room 2922 (EPA Library)
401 M Street, S. W.
Washington, D. C. 20460

TABLE OF CONTENTS

Page

List of Tables xvii

List of Maps and Figures xxiv

Chapter 1. Summary 1-1

1.1 The Proposed Standard 1-1

1.2 Environmental Impact 1-8

1.2.1 Alternatives to the Proposed Action 1-8

1.2.2 Summary of the Environmental Impacts of the Proposed Standard 1-23

1.2.3 Relationship Between Local Short-Term Uses of Man's Environment and the Maintenance and Enhancement of Long-Term Productivity 1-31

1.2.4 Irreversible and Irretrievable Commitments of Resources Which Would Be Involved if the Proposed Action Should Be Implemented 1-31

1.3 Economic Impact 1-32

Chapter 2. Rationale for Regulating Vinyl Chloride .....

2.1 History 2-1

2.2 Alternative Control Strategies Considered 2-2

2.2.1 No Action or Delayed Standards 2-2

2.2.1.1 Summary of Health Findings 2-2

Page

2.2.1.2 Extent of Public Exposure to Vinyl Chloride 2-4

2.2.1.3 Other Regulations and Their Effect on Vinyl Chloride Emissions 2-5

2.2.1.4 Conclusions 2-7

2.2.2 Action Under Section 115 - Abatement Conferences 2-7

2.2.3 Action Under Section 303 - Emergency Powers 2-8

2.2.4 Standards Under Section 109 - National Ambient Air Quality Standards (NAAQS) 2-9

2.2.5 Standards Under Section 111 - Standards of Performance for New Stationary Sources (SPNSS) 2-11

2.2.6 Standards Under Section 112 - National Emission Standards for Hazardous Air Pollutants (NESHAP) 2-14

2.2.6.1 Vinyl Chloride as a Hazardous Pollutant 2-15

2.3 Setting an Emission Limit 2-18

2.3.1 The Alternative of Prohibiting Vinyl Chloride Emissions 2-19

2.3.2 The Alternative of Best Available Control Technology.. 2-25

2.4 Selection of Source Categories 2-27

2.4.1 Ethylene Dichloride - Vinyl Chloride Plants 2-27

2.4.2 Polyvinyl Chloride Plants 2-27

2.4.3 Polyvinyl Chloride Fabricating Plants 2-27

2.4.4 Miscellaneous Sources of Vinyl Chloride 2-29

2.5 Conclusions 2-31

References 2-33

Chapter 3. The Ethylene Dichloride - Vinyl Chloride and Polyvinyl Chloride Industries 3-1

3.1 General 3-1

Page

3.2 Description of the Process 3-3

3.2.1 Ethylene Dichloride - Vinyl Chloride Production 3-3

3.2.1.1 Acetylene - Hydrogen Chloride Process 3-3

3.2.1.2 Ethylene Dichloride Process 3-5

3.2.2 Polyvinyl Chloride Production 3-10

3.2.2.1 Suspension Polymerization 3-11

3.2.2.2 Dispersion (Emulsion) Polymerization 3-19

3.2.2.3 Bulk Polymerization 3-19

3.2.2.4 Solvent Polymerization 3-22

3.2.3 Summary 3-24

References 3-26

Chapter 4. Control Technology 4-1

4.1 Adsorption 4-3

4.1.1 Carbon Adsorption 4-3

4.1.2 Resin Adsorption 4-7

References 4-9

4.2 Incineration 4-10

References 4-15

4.3 Solvent Absorption 4-16

References 4-20

4.4 Refrigeration 4-21

References 4-23

4.5 Control of Fugitive Emissions 4-24

References 4-29

Page

4.6 Relief Valve Discharge 4-30

References 4-31

4.7 Gasholder and Purge Water System 4-32

References 4-37

4.8 Improved Stripping 4-38

References 4-45

4.9 Reactor Opening Loss Controls 4-46

References 4-49

4.10 Emissions and Control Techniques for Inprocess Wastewater 4-50

References 4-53

4.11 Particulate Control 4-54

4.11.1 Centrifugal Separators Applied in the Polyvinyl Chloride Industry 4-55

4.11.2 Fabric Filters Applied to the Polyvinyl Chloride Industry 4-56

4.12 Data Demonstrating Capability of Selected Control Techniques 4-57

4.12.1 Stripping 4-57

4.12.2 Carbon Adsorption 4-61

4.12.3 Incineration 4-68

4.12.4 Solvent Absorption 4-70

4.12.5 Purge Water System 4-71

4.12.6 Process Equipment Purge 4-72

Page

4.12.7 Oxychlorination Process Emissions 4-72

4.12.8 Bulk Plant Purge 4-72

References 4-73

4.13 Control Techniques Summary 4-74

Chapter 5. Alternative Control Levels 5-1

5.1 Ethylene Dichloride - Vinyl Chloride Plants 5-4

5.2 Polyvinyl Chloride Plants 5-6

Chapter 6. Environmental Impacts of the Alternative Control Levels 6-1

6.1 Secondary Environmental Impacts of Individual Control Systems 6-2

6.2 Primary and Secondary Environmental Impacts at Model Plants 6-8

6.2.1 Primary Environmental Impacts 6-8

6.2.2 Secondary Environmental Impacts 6-25

6.2.2.1 Air Impact 6-26

6.2.2.2 Water Impact 6-40

6.2.2.3 Solid Waste 6-51

6.2.2.4 Noise and Radiation 6-52

6.2.2.5 Energy Considerations 6-52

References 6-61

Chapter 7. Economic Impact Analysis 7-1

7.1 Industry Economic Profile 7-1

7.1.1 Ethylene Dichloride 7-1

7.1.2 Vinyl Chloride 7-1

Page

7.1.3 Polyvinyl Chloride 7-2

7.1.4 Vertical Integration and Industry Concentration 7-2

7.1.5 Polymerization of Polyvinyl Chloride Resins by Process 7-3

7.1.6 Polyvinyl Chloride Consumption by End Use 7-3

7.1.7 Polyvinyl Chloride Substitutes 7-4

7.1.8 Industry Employment 7-5

7.1.9 Increases in Industry Capacity 7-5

7.1.10 Product Price Histories 7-6

7.2 Cost Analysis of Alternative Emission Control Systems 7-8

7.2.1 Introduction 7-8

7.2.2 Cost of Alternative Control Measures 7-10

7.2.2.1 Ethylene Dichloride - Vinyl Chloride Model Plant 7-10

7.2.2.2 Suspension Polyvinyl Chloride Model Plant 7-12

7.2.2.3 Dispersion Polyvinyl Chloride Model Plant 7-15

7.2.2.4 Bulk Polyvinyl Chloride Model Plant 7-16

7.2.3 Cost-Effectiveness of Vinyl Chloride Controls 7-17

7.3 Economic Impact Analysis of Alternative Control Systems 7-18

7.3.1 Introduction 7-18

7.3.2 Discussion 7-19

7.3.3 Ethylene Dichloride - Vinyl Chloride Plants - Existing Plant Economic Impact Analysis 7-22

7.3.3.1 Existing Ethylene Dichloride Plants 7-22

Page

7.3.3.2 Existing Vinyl Chloride Plants 7-28

7.3.4 Ethylene Dichloride - Vinyl Chloride Plants - New Plant Economic Impact Analysis 7-35

7.3.5 Polyvinyl Chloride Plants - Existing Plant Economic Impact Analysis 7-38

7.3.5.1 Introduction 7-38

7.3.5.2 Control Scenario #1 7-38

7.3.5.3 Control Scenario #2 7-42

7.3.5.4 Control Scenario #3 7-43

7.3.5.5 Control Scenario #4 7-45

7.3.6 Polyvinyl Chloride Plants - New Plant Economic Impact Analysis 7-47

7.3.6.1 Introduction 7-47

7.3.6.2 New Suspension Process Plants 7-47

7.3.6.3 New Dispersion Process Plants 7-50

7.3.6.4 New Bulk Process Plants 7-53

7.3.7 Summary 7-54

7.3.7.1 Ethylene Dichloride - Vinyl Chloride Plants 7-54

7.3.7.2 Polyvinyl Chloride Plants 7-57

References 7-65

Chapter 8. Rationale for the Proposed Standard 8-1

8.1 Selection of Emission Sources to be Covered by the Proposed Standard 8-1

8.2 Rationale for the Emission Limits 8-3

8.2.1 Oxychlorination Reactor at Ethylene Dichloride - Vinyl Chloride Plants 8-5

Page

8.2.2 Sources Following the Stripper in Dispersion Resin Manufacture at Polyvinyl Chloride Plants 8-9

8.2.3 Other Stack Emission Sources 8-14

8.2.4 Fugitive Emission Sources 8-22

8.3 Selection of the Format of the Proposed Standard 8-32

8.4 Methods for Determining Compliance With the Proposed Standard 8-40

8.4.1 Emission Tests 8-40

8.4.2 Reporting 8-41

8.4.3 Recordkeeping 8-45

8.4.4 Other Methods for Determining Compliance 8-45

8.5 Evaluation of Need to Set Standards for Polyvinyl Chloride Particulate 8-46

8.5.1 Polyvinyl Chloride Particulate as a Source of Vinyl Chloride Emissions 8-46

8.5.2 Need to Set a Standard for Polyvinyl Chloride Particulate 8-49

References 8-51

Chapter 9. Other Regulatory Requirements Developed or Being Developed for Vinyl Chloride and Their Relationship to the Proposed Standard for Vinyl Chloride 9-1

9.1 Occupational Safety and Health Administration 9-1

9.1.1 The Emergency Temporary Standard 9-1

9.1.2 The Proposed Permanent Standard 9-1

9.1.3 The Promulgated Permanent Standard 9-2

9.1.4 Amendments and Corrections to the October 4, 1974 Regulation 9-3

9.1.5 Relationship of the Proposed EPA Standard and the OSHA Regulation 9-4

Page

9.2 Environmental Protection Agency 9-6

9.2.1 Water Regulations 9-6

9.2.2 Pesticide Regulation 9-7

9.3 Department of Transportation 9-7

9.4 Department of Health, Education, and Welfare 9-8

9.4.1 Food Packages 9-8

9.4.2 Aerosol Products 9-9

9.5 Consumer Product Safety Commission 9-9

9.6 State Regulations 9-10

Appendix A. Evaluation of the Proposed Standard A-1

Appendix B. Index to Environmental Impact Considerations B-1

Appendix C. Emission Source Test Data C-1

Appendix D. Emission Monitoring and Compliance Testing Techniques and Costs D-1

Abstract and Technical Report Data..... E-1

LIST OF TABLES

		Page
1-1	Emission Standard for Ethylene Dichloride - Vinyl Chloride Plants	1-9
1-2	Emission Standard for Polyvinyl Chloride Plants	1-11
1-3	Matrix of Environmental and Economic Impacts of Alternatives for Regulating Vinyl Chloride Emissions from Ethylene Dichloride - Vinyl Chloride Plants	1-16
1-4	Matrix of Environmental and Economic Impacts of Alternatives for Regulating Vinyl Chloride Emissions from Polyvinyl Chloride Plants	1-17
2-1	Estimated Vinyl Chloride Emissions in the U. S. - 1974	2-28
3-1	Producing Companies, Plant Locations, and Capacities - Ethylene Dichloride	3-28
3-2	Producing Companies, Plant Locations, and Capacities - Vinyl Chloride	3-30
3-3	Producing Companies, Plant Locations, and Capacities - PVC Resins	3-32
3-4	PVC Producers by Process	3-35
3-5	Vinyl Chloride Emissions for Ethylene Dichloride-Vinyl Chloride Production	3-37
3-6	Vinyl Chloride Emissions for Suspension Polyvinyl Chloride Process	3-38
3-7	Vinyl Chloride Emissions for Dispersion Polyvinyl Chloride Process	3-39
3-8	Vinyl Chloride Emissions for Bulk Polyvinyl Chloride Polymerization	3-40
3-9	Vinyl Chloride Emissions for Solvent Polyvinyl Chloride Polymerization	3-41

		Page
3-10	Summary of Fugitive Emissions	3-42
3-11	Vinyl Chloride Monomer Content in Streams Discharging to Sewer	3-44
4-1	Source Description for Typical Polyvinyl Chloride Plant	4-77
4-2	Source Description for Typical Ethylene Dichloride-Vinyl Chloride Plant	4-79
4-3	Control Techniques Applicable to Polyvinyl Chloride Plants	4-80
4-4	Control Techniques Applicable to Ethylene Dichloride-Vinyl Chloride Plants	4-83
4-5	April 1975 Status of Dispersion Resin Stripping with Projection of Future Capabilities	4-84
4-6	April 1975 Status of Suspension Resin Stripping	4-85
4-7	Adsorption of Recovered Vinyl Chloride Monomer on Activated Carbon	4-86
4-8	Kilograms Per Year of VCM Emitted during Equipment Purge for Typical 316 MM kg/yr (700 MM lb/yr) EDC-VCM Plant	4-87
4-9	Kilograms Per Year of VCM Emitted During Equipment Purge from Typical 68 MM kg/yr (150 MM lb/yr) PVC Plant	4-88
4-10	Oxychlorination Process Vent Description	4-89
4-11	Polyvinyl Chloride Particulate Emission Factors	4-90
6-1	Secondary Environmental Impacts of Individual Control Systems	6-3
6-2	Vinyl Chloride Mass Emission Reduction	6-9
6-3	Reductions in Vinyl Chloride Ambient Concentrations - Estimated by Diffusion Modeling - 5-Minute Maxima	6-13
6-4	Reductions in Vinyl Chloride Ambient Concentrations - Estimated by Diffusion Modeling - 24-Hour Average Maxima	6-14

Page

6-5 Reductions in Vinyl Chloride Ambient Concentrations - Estimated by Diffusion Modeling - Annual Average Maxima 6-15

6-6 Vinyl Chloride Ambient Concentrations - Cluster of Four Ethylene Dichloride - Vinyl Chloride and Polyvinyl Chloride Plants - 5-Minute, 24-Hour and Annual Average Maxima - Unregulated and Regulated 6-18

6-7 Emission Factors for Hydrogen Chloride Resulting From Incineration of Emission Points in Ethylene Dichloride - Vinyl Chloride (EDC-VCM) and Polyvinyl Chloride (PVC) Plants .. 6-29

6-8 Hydrogen Chloride Mass Emissions from Model Ethylene Dichloride - Vinyl Chloride Plants Using Incineration to Attain the Alternative Control Levels 6-30

6-9 Hydrogen Chloride Mass Emissions from Model Polyvinyl Chloride Plants Using Incineration to Control a Maximum Number of Emission Points 6-31

6-10 Hydrogen Chloride Ambient Concentrations From Incineration of Vinyl Chloride Emissions at Ethylene Dichloride - Vinyl Chloride Plants - Estimated by Diffusion Modeling 6-34

6-11 Hydrogen Chloride Ambient Concentrations From Incineration of Vinyl Chloride Emissions at Polyvinyl Chloride Plants - Estimated by Diffusion Modeling 6-35

6-12 Increased Water Consumption by Model Ethylene Dichloride - Vinyl Chloride Plants Using an Incinerator-Scrubber to Attain the Alternative Control Levels 6-41

6-13 Increased Water Consumption by Model Polyvinyl Chloride Plants Using Various Control Systems to Attain the Proposed Standard/ Alternative II (Dispersion Plants) 6-42

6-14 Quantities of Vinyl Chloride Released Into the Plant Inprocess Wastewater by Control Systems Which Can Be Used to Meet the Proposed Standard/Alternative II (Dispersion Plants) 6-44

6-15 Information on Water Effluent From Incinerator-Scrubber Systems At Model Ethylene Dichloride - Vinyl Chloride Plants Attaining the Alternative Control Levels 6-47

		Page
6-16	Information on Water Effluent from Incinerator-Scrubber Systems at Model Polyvinyl Chloride Plants Controlling a Maximum Number of Emission Points With Incineration	6-48
6-17	Increased Energy Consumption - Ethylene Dichloride - Vinyl Chloride Plant [318 MM kg VCM/YR (700 MM lb VCM/YR)] Attaining the Alternative Control Levels	6-53
6-18	Increased Energy Consumption - Dispersion Polyvinyl Chloride Plant [14 MM kg/yr (30 MM lb/yr)]	6-54
6-19	Increased Energy Consumption - Suspension Polyvinyl Chloride Plant [68 MM kg/yr (150 MM lb/yr)] Meeting the Proposed Standard	6-56
6-20	Increased Energy Consumption - Bulk Polyvinyl Chloride Plant [45 MM kg/yr (100 MM lb/yr)] Meeting the Proposed Standard ..	6-57
6-21	Comparison of Energy Consumption by Model Plants With and Without Controls	6-58
7-1	Vertical Integration in the EDC/VCM/PVC Industry	7-66
7-2	1974 PVC Consumption by End-Use Category	7-68
7-3	Possible PVC Substitutes	7-69
7-4	Announced PVC Capacity Expansions and Closures	7-71
7-5	Prices of Ethylene Dichloride, Vinyl Chloride, and Polyvinyl Chloride	7-72
7-6	Summary of Algorithms Used For Computing Model Plant Costs and Credits	7-73
7-7	Control Costs for Model Balanced EDC-VCM Plant	7-78
7-8	Control Costs For Model PVC Suspension Plants	7-79
7-9	Control Costs For Model PVC Dispersion Plants	7-81
7-10	Control Costs For Model PVC Bulk Plants	7-83
7-11	Summary of Fugitive Emission Control Costs For Balanced Ethylene Dichloride - Vinyl Chloride Model Plant	7-84

		Page
7-12	Summary of Fugitive Emission Control Costs for Suspension Polyvinyl Chloride Model Plant	7-86
7-13	Summary of Fugitive Emission Control Costs for Dispersion Polvinyl Chloride Model Plant	7-88
7-14	Summary of Fugitive Emission Control Costs For Bulk Polyvinyl Chloride Model Plant	7-90
7-15	Cost-Effectiveness of Alternative Vinyl Chloride Control Methods	7-92
7-16	EPA Water Effluent Regulations - Compliance Costs for EDC, VCM, and PVC Plants to Meet the 1983 (Best Available Technology) Requirements	7-94
7-17	Existing EDC Plants - Capital Summary, Alternative I or Alternative II	7-95
7-18	Existing EDC Plants - Annualized Cost Summary, Alternative I or Alternative II	7-96
7-19	Existing EDC Plant Profitability Calculations and Assumptions (Before Control)	7-97
7-20	Existing EDC Plants - Profitability Summary, Alternative I or Alternative II	7-98
7-21	Existing EDC Plants - Capital Summary, Alternative III	7-99
7-22	Existing EDC Plants - Annualized Cost Summary, Alternative III	7-100
7-23	Existing EDC Plants - Profitability Summary, Alternative III	7-101
7-24	Existing VCM Plants - Capital Summary, Alternative I	7-102
7-25	Existing VCM Plants - Annualized Cost Summary, Alternative I	7-103
7-26	Existing VCM Plants - Profitability Summary, Alternative I	7-104
7-27	Existing VCM Plants - Capital Summary, Alternative II	7-105

Page

7-28 Existing VCM Plants - Annualized Cost Summary, Alternative II 7-106

7-29 Existing VCM Plants - Profitability Summary, Alternative II 7-107

7-30 Existing VCM Plants - Capital Summary, Alternative III 7-108

7-31 Existing VCM Plants - Annualized Cost Summary, Alternative III 7-109

7-32 Existing VCM Plants - Profitability Summary, Alternative III 7-110

7-33 Financial Impact of Alternative Control Levels on New EDC-VCM Plants 7-111

7-34 Existing PVC Plants - Capital Summary, Control Scenario #1 7-112

7-35 Existing PVC Plants - Annualized Cost Summary, Control Scenario #1 7-114

7-36 Existing PVC Plants - Profitability Summary, Control Scenario #1 7-116

7-37 Existing PVC Plants - Capital Summary, Control Scenario #2 7-118

7-38 Existing PVC Plants - Annualized Cost Summary, Control Scenario #2 7-120

7-39 Existing PVC Plants - Profitability Summary, Control Scenario #2 7-122

7-40 Existing PVC Plants - Capital Summary, Control Scenario #3 7-124

7-41 Existing PVC Plants - Annualized Cost Summary, Control Scenario #3 7-126

7-42 Existing PVC Plants - Profitability Summary, Control Scenario #3 7-128

		Page
7-43	Existing PVC Plants - Capital Summary, Control Scenario #4	7-130
7-44	Existing PVC Plants - Annualized Cost Summary, Control Scenario #4	7-132
7-45	Existing PVC Plants - Profitability Summary, Control Scenario #4	7-134
7-46	Financial Impact of Various Control Systems at New Suspension Process PVC Plants	7-136
7-47	Financial Impact of Various Control Systems at New Dispersion Process PVC Plants	7-138
7-48	Effect of Economies of Scale on New Dispersion Process PVC Plants	7-139
7-49	Financial Impact of Various Control Systems at New Bulk Process PVC Plants	7-140
8-1	Alternative Control Levels for a Typical [318 Million Kilograms (700 Million Pounds) a Year] Ethylene Dichloride - Vinyl Chloride Plant	8-6
8-2	Alternative Control Levels for a Typical 14 Million Kilograms (30 Million Pounds) a Year PVC Dispersion Plant	8-11

LIST OF MAPS AND FIGURES

		Page
Figure 3-1	Acetylene Process For Vinyl Chloride Production	3-4
Figure 3-2	Vinyl Chloride by the Balanced Process	3-6
Figure 3-3	Dichloroethane Cracking Process for Vinyl Chloride Production	3-7
Figure 3-4	The Oxychlorination Process	3-8
Figure 3-5	Polyvinyl Chloride Plant - Suspension Process	3-12
Figure 3-6	Polyvinyl Chloride Plant - Dispersion Process	3-20
Figure 3-7	Polyvinyl Chloride Plant - Bulk Process	3-21
Figure 3-8	Polyvinyl Chloride Plant - Solvent Process	3-23
Map 3-1	Ethylene Dichloride Plant Locations	3-29
Map 3-2	VCM Plant Locations	3-31
Map 3-3	PVC Plant Locations	3-34
Figure 4-1	Countercurrent Stripping Column	4-43
Figure 4-2	American Chemical Incinerator Test	4-69
Figure 6-1	Map of Four Plant Cluster - Case A	6-19
Figure 6-2	Map of Four Plant Cluster - Case B	6-19

1. SUMMARY

1.1 The Proposed Standard

A national emission standard for vinyl chloride emissions from ethylene dichloride-vinyl chloride and polyvinyl chloride plants is being proposed under the authority of section 112 of the Clean Air Act. Section 112 is intended for the regulation of hazardous air pollutants. "Hazardous air pollutant" is defined in section 112 as "an air pollutant to which no ambient air quality standard is applicable and which in the judgment of the Administrator may cause, or contribute to, an increase in mortality or an increase in serious irreversible, or incapacitating reversible, illness."

Vinyl chloride has been implicated as the causal agent of angiosarcoma (a rare form of liver cancer), other cancers, and serious noncarcinogenic disorders in people with occupational exposure and in animals with experimental exposure to vinyl chloride. Reasonable extrapolations from these findings cause concern that vinyl chloride may cause or contribute to the same or similar disorders at present ambient air levels. Therefore, vinyl chloride meets the specifications of a "hazardous air pollutant" as defined in the Clean Air Act.

Section 112 requires that emission standards be established at a level which provides an ample margin of safety to protect public health. As applied to threshold pollutants, this requires that emission standards be established below the threshold level of effects. This cannot be done for vinyl chloride because no dose-response data are

available for the concentrations of vinyl chloride found in the ambient air. Moreover, for carcinogens there may be no atmospheric concentration which poses absolutely no public health risk. Therefore, the purpose of the proposed standard is to minimize vinyl chloride emissions from ethylene dichloride-vinyl chloride and polyvinyl chloride plants to the level attainable with best available control technology. This would have the effect of furthering the protection of public health by minimizing the health risks to the people living in the vicinity of these plants and to any additional people who are exposed as a result of new construction.

The stationary source categories of vinyl chloride emissions include 41 polyvinyl chloride plants which are responsible for approximately 85 percent of the total nationwide emissions, 17 ethylene dichloride-vinyl chloride plants which are responsible for approximately 11 percent of the total emissions and approximately 8000 fabricating plants and several miscellaneous sources which are responsible for the remaining emissions. The proposed standard is applicable to only ethylene dichloride-vinyl chloride and polyvinyl chloride plants which are the largest sources of emissions. (It should be noted that throughout this document the term "ethylene dichloride-vinyl chloride plants" is used. This is because ethylene dichloride and vinyl chloride are typically produced at the same plant location. However, this is not necessarily the case. The proposed standard applies to plants which produce ethylene dichloride or vinyl chloride as well as to plants which produce both). Standards for the fabricating plants are

not being proposed at this time because available ambient monitoring data indicate that vinyl chloride concentrations in the vicinity of these plants are negligible. Also, vinyl chloride emissions from these plants will be minimized indirectly as polyvinyl chloride plants reduce the residual vinyl chloride in the raw materials going to the fabricating plants in response to the proposed standard and OSHA's standard for vinyl chloride which was promulgated October 4, 1974. A decision on whether standards for the miscellaneous sources will be proposed will be made after on-going studies on them are completed.

The proposed standard for ethylene dichloride-vinyl chloride and polyvinyl chloride plants would impact primarily on southeastern Texas, southern Louisiana, and the Northeastern States, where most of the plants are located. Fourteen of the 17 ethylene dichloride-vinyl chloride plants are located in southeastern Texas and southern Louisiana. Other States in which ethylene dichloride-vinyl chloride or polyvinyl chloride plants are located include Kentucky, California, Illinois, Massachusetts, Mississippi, Oklahoma, Delaware, Maryland, Pennsylvania, Ohio, New Jersey, New York, West Virginia, Georgia, and Michigan. There is also an ethylene dichloride-vinyl chloride plant in Puerto Rico. Additional States may be affected by the proposed standard as new plants are constructed. The proposed standard is a national emission standard which will be enforced by the Federal EPA and by States which request and are delegated the authority to enforce the standard.

In order to minimize vinyl chloride emissions to the atmosphere, the proposed standard covers all known point and fugitive emission

sources in both ethylene dichloride-vinyl chloride and polyvinyl chloride plants. The point sources in ethylene dichloride-vinyl chloride plants include ethylene dichloride purification, vinyl chloride formation and purification, and the oxychlorination reactor. The point sources in polyvinyl chloride plants include reactors; strippers; mixing, weighing and holding containers; monomer recovery systems; slurry blend tanks; centrifuges; concentrators; dryers; baggers; and storage silos. Fugitive emission sources in both kinds of plants include loading (or unloading) vinyl chloride from storage vessels into transfer equipment, slip gauges, leakage from equipment (including pump, compressor, and agitator seals and relief valves), opening of equipment for cleaning and maintenance, manual venting of gases to reduce pressure in equipment, obtaining samples of vinyl chloride product, and inprocess wastewater. Relief discharges from equipment in both ethylene dichloride-vinyl chloride and polyvinyl chloride plants cause short-term peak emissions.

The proposed standard would reduce emissions from a typical ethylene dichloride-vinyl chloride plant by approximately 94 percent and from a typical polyvinyl chloride plant by approximately 95 percent. (These emission reductions are based on emission levels which were reported to exist in the spring of 1974. The reductions in fugitive emissions as a result of the proposed standard cannot be quantified, but are included in these percentages based on best judgment.) The

emission limitations included in the proposed standard for ethylene dichloride-vinyl chloride and polyvinyl chloride plants are summarized in the following paragraphs.

Ethylene Dichloride-Vinyl Chloride Plants

The proposed standard would apply to any plant where ethylene dichloride is produced by reaction of oxygen and hydrogen chloride with ethylene. It would also apply to any plant where vinyl chloride is made by one or more processes including, but not limited to, the addition of hydrogen chloride to acetylene and dehydrochlorination of ethylene dichloride. Ethylene dichloride and vinyl chloride are typically produced at the same plant location, although this is not necessarily the case. The individual emission points in ethylene dichloride-vinyl chloride plants would be regulated as follows:

1. Emissions from equipment used in the purification process for ethylene dichloride and in the formation and purification processes for vinyl chloride would be reduced to 10 ppm by volume. This can be accomplished by add-on control devices, such as an incinerator.

2. Emissions from the oxychlorination reactor would be reduced to 0.02 kg/100 kg ethylene dichloride product from the oxychlorination process. This can be accomplished by controlling process parameters or by add-on control devices, such as an incinerator.

3. Preventable relief valve discharges would not be permitted.

4. Fugitive emissions would be minimized primarily by equipment and procedural specifications requiring enclosure of the emission sources and capture of the emissions. For example, before opening equipment to the atmosphere, vinyl chloride contained in the equipment would have to be removed and transferred to a recovery system or a control device. Leakage from pump seals would be prevented by installing pumps with no seals or with double mechanical seals. A formal program would be instituted and implemented for leak detection and elimination. Vinyl chloride emissions from the more highly concentrated inprocess wastewater streams would be reduced by removing the vinyl chloride from the water before the water is exposed to the atmosphere; the vinyl chloride removed would be collected and ducted to a recovery system or control device.

Polyvinyl Chloride Plants

The proposed standard would apply to any plant which polymerizes vinyl chloride. Production of homopolymers, copolymers, terpolymers, or other polymers containing any fraction of polymerized vinyl chloride would be covered. The standard would be applicable to all manufacturing processes, including suspension, dispersion, emulsion, latex, bulk, and any other processes developed in the future. The individual emission points in polyvinyl chloride plants would be regulated as follows:

1. Emissions from major process equipment preceding and including the stripping operation in the flow of materials through the plant (e.g. reactors, strippers, and monomer recovery systems) would

be reduced to 10 ppm by volume. This can be accomplished by add-on control devices, such as carbon adsorption.

2. Emissions from major process equipment following the stripping operation in the flow of materials through the plant (e.g. slurry blend tanks, centrifuges, dryers and storage silos) would be reduced by removing the residual vinyl chloride from the polyvinyl chloride resin during the stripping operation before the polyvinyl chloride resin is processed in equipment following the stripper. Dispersion resins would contain no more than 2000 ppm residual vinyl chloride as they completed the stripping operation and all other resins would contain no more than 400 ppm residual vinyl chloride. Add-on control devices, such as incinerators, could also be employed to attain comparable emission levels.

3. Emissions from opening of reactors would be reduced to 0.001 kg/100 kg of reactor product. Except for postpolymerization reactors in the manufacture of bulk resins, one way in which this can be accomplished is by using water to displace the vinyl chloride in the reactor to a recovery system before opening the reactor and reducing the number of reactor openings by solvent cleaning. For postpolymerization reactors in the manufacture of bulk resins, the proposed standard could be attained by evacuating the reactor several times and breaking the vacuum with nitrogen. The number of evacuations would depend on the volume of gas in the reactor and the vacuum involved.

4. Preventable relief discharges would not be permitted. For example, relief discharges from reactors can be prevented by

several measures, including injecting chemicals to stop the polymerization reaction, instrumentation of the reactor to detect upset condition, or venting the contents of the reactor to a gasholder and ultimately to a monomer recovery system.

5. As in ethylene dichloride-vinyl chloride plants, fugitive emissions would be minimized primarily by equipment and procedural specifications requiring enclosure of the emission sources and capture of the emissions. A formal program would be instituted and implemented for leak detection and elimination. Vinyl chloride emissions from the more highly concentrated inprocess wastewater streams would be reduced by removing the vinyl chloride from the water before the water is exposed to the atmosphere; the vinyl chloride removed would be collected and ducted to a recovery system or control device.

A more detailed summary of the proposed emission limits and testing, reporting, and recordkeeping requirements for ethylene dichloride-vinyl chloride and polyvinyl chloride plants can be found in Tables 1-1 and 1-2, respectively.

1.2 Environmental Impact

1.2.1 Alternatives to the Proposed Action

Several different sets of alternatives were considered in developing the proposed standard for vinyl chloride. These different sets of alternatives are listed as follows:

A. Alternative regulatory strategies

The first step in evaluating the vinyl chloride problem was to determine whether standards for atmospheric emissions of vinyl

TABLE 1-1. EMISSION STANDARD FOR ETHYLENE DICHLORIDE-VINYL CHLORIDE PLANTS

			Required testing, reporting, and recordkeeping			
Source	Emission limit	Possible method of control	Initial report (within 90 days of promulgation	Routine tests Semi-annual report	Other reporting	Recordkeeping
(1) EDC Purification	10 ppm	Incinerator	Emission Test using Test Method 106	A record of any emissions in excess of the standard as measured by a multipoint vinyl chloride detector		A record of emissions as measured by a multipoint vinyl chloride detector
(2) VCM Formation and Purification	10 ppm	Incinerator	Emission Test using Test Method 106	A record of any emissions in excess of the standard as measured by a multipoint vinyl chloride detector		A record of emissions as measured by a multipoint vinyl chloride detector
(3) Oxychlorination Reactor	0.02 kg/100 kg ethylene dichloride product from the oxychlorination process	Control process variables	Emission Test using Test Method 106	A record of any emissions in excess of the standard as measured by a multipoint vinyl chloride detector		A record of emissions as measured by a multipoint vinyl chloride detector
(4) Relief Valve Discharges	0	Preventive Measures			Within 10 days of any discharge	

TABLE 1-1 (continued). EMISSION STANDARD FOR ETHYLENE DICHLORIDE-VINYL CHLORIDE PLANTS

Source	Emission limit	Possible method of control	Required testing, reporting, and recordkeeping: Initial report (within 90 days of promulgation	Routine tests Semi-annual report	Other reporting	Recordkeeping
(5) Fugitive Emission Sources						
(a) Loading Lines	(a) 4.4 l. (1 gal) vinyl chloride at STP (b) 10 ppm[1]	(a) Displacement, vacuum (b) Incineration[1]				Standard Operating Procedure
(b) Slip gauges	10 ppm[1]	Incineration				Standard Operating Procedure
(c) Pump and compressor seals	Minimize leakage	Sealess pumps, double mech. seals	Statement that have installed and are implementing necessary equipment; and an emission test for the control device to which fugitive emissions are required to be ducted, using test method 106.			
(d) Relief valve leakage	Minimize leakage	Rupture disks				
(e) Manual venting	(a) 0 (b) 10 ppm[1]	(a) Gasholder (b) Incineration				Standard Operating Procedure
(f) Opening equipment						
(i) < 5,500 l (1250 gal)	(a) 110 l. (25 gal) at STP (b) 10 ppm[1]	Reduce pressure, (a) vacuum (b) Incineration[1]				Standard Operating Procedure
(ii) ≥ 5,500 l (1250 gal)	(a) Reduce VC to 2% at STP (b) 10 ppm[1]	(a) Displace, vacuum (b) Incineration[1]				
(g) Sample flask	≈ 0	Purge back to process				
(h) Leak detection	Fixed monitor, portable monitor, standard operating procedure	Formal program for leak detection and repair			Within 45 days, submit program for approval	A record of measurements; a record of leak detection and repair.
(i) Inprocess Wastewater	(a) 10 ppm (b) 10 ppm[1]	(a) Stripper (b) Incineration[1]	Emission Test-Method 107			

[1] Refers to the control device to which captured fugitive emissions are required to be ducted.

TABLE 1-2. EMISSION STANDARD FOR POLYVINYL CHLORIDE PLANTS

Source	Emission limit	Possible method of control	Required testing, reporting, and recordkeeping: Initial report (within 90 days of promulgation	Routine tests Semi-annual report	Other reporting	Recordkeeping
(1) Process Equipment prior to and including stripper (reactor;stripper, monomer recovery system;mixing, weighing and holding containers)	10 ppm	Adsorption	Emission Test-Using Test Method 106	A record of any emissions in excess of the standard as measured by a multipoint vinyl chloride detector		A record of emissions as measured by a multipoint vinyl chloride detector
(2) Reactor Opening Loss	0.001 kg/100 kg product	Water Purge	Emission Test Using Test Method 106 or Portable Hydrocarbon Detector	Emission Test using Test Method 106 or Portable Hydrocarbon Detector		
(3) Relief Valve Discharges	0	Preventive Measures			Within 10 days of any discharge	Daily operating record on reactors, including pressures, temperatures.
(4) Sources Following the Stripper (slurry blend tank, dryer, storage, inprocess wastewater, etc.)	(a) Dispersion Resins (1) Strip to 2000 ppm (averaged on a daily basis and weighted according to the production of each grade); or (2) 0.2 kg/100 kg product (b) Other Resins (1) Strip to 400 ppm (averaged on a daily basis, averaged separately for each resin type, and weighted according to the production of each grade); or (2) 0.04 kg/100 kg product	(a) Dispersion Resins (1) Improved Stripping (2) Add-On Controls (b) Other Resins (1) Improved Stripping (2) Add-On Controls	If improved stripping is not used as the method of control; simultaneous emission tests for all sources, using Test Method 106 for stacks and Test Method 107 for inprocess wastewater. If improved stripping is used, measurements of the vinyl chloride in the resin as the resin leaves the stripper.	If improved stripping is used; measurements of the vinyl chloride in the resin as the resin leaves the stripper. If batch stripping is used, one sample per batch. If continuous stripping is used, one sample per shift. Test Method 107 used for the measurements.		Information used to develop the semi-annual report

TABLE 1-2 (continued). EMISSION STANDARD FOR POLYVINYL CHLORIDE PLANTS

Source	Emission limit	Possible method of control	Required testing, reporting, and recordkeeping: Initial report (within 90 days of promulgation	Routine tests Semi-annual report	Other reporting	Recordkeeping
(5) Fugitive Emission Sources						
(a) Unloading lines	(a) 4.4 l. (1 gal) vinyl chloride at STP (b) 10 ppm[1]	(a) Displacement, vacuum (b) Adsorption[1]				Standard Operating Procedure
(b) Slip gauges	10 ppm[1]	Adsorption[1]				Standard Operating Procedure
(c) Pump, compressor and agitator seals	Minimize leakage	Sealess pumps, double mech. seals	Statement that have installed and are implementing necessary equipment; and an emission test for the control device to which fugitive emissions are required to be ducted, using test method 106.			
(d) Relief valve leakage	Minimize leakage	Rupture disks				
(e) Manual venting	(a) 0 (b) 10 ppm[1]	(a) Gasholder (b) Adsorption				Standard Operating Procedure
(f) Opening equipment						
(i) < 5,500 l (1250 gal)	(a) 110 l (25 gal) at STP (b) 10 ppm[1]	(a) Reduce pressure, vacuum (b) Adsorption[1]				Standard Operating Procedure
(ii) ≥ 5,500 l (1250 gal)	(a) Reduce VC to 2% at STP (b) 10 ppm[1]	(a) Displace, vacuum (b) Adsorption[1]				
(g) Sample flask	≈ 0	Purge back to process				
(h) Leak detection	Fixed monitor, portable monitor, standard operating procedure	Formal program for leak detection and repair			Within 45 days, submit program for approval	A record of measurements; a record of leak detection and repair.
(i) Inprocess Wastewater	(a) 10 ppm (b) 10 ppm[1]	(a) Stripper (b) Adsorption[1]	Emission Test-Method 107			

[1] Refers to the control device to which captured fugitive emissions are required to be ducted.

chloride are needed, and if so, which section of the Clean Air Act should be used to regulate the emissions. Therefore, the following alternatives were considered:

1. No proposal of standards.

2. Delay proposal of standards until more data are available.

3. Section 115 of the Clean Air Act (Abatement Conferences).

4. Section 303 of the Clean Air Act (Emergency Powers).

5. Section 109 of the Clean Air Act (National Ambient Air Quality Standards for Vinyl Chloride).

6. Section 109 of the Clean Air Act (National Ambient Air Quality Standards for Non-Methane Hydrocarbons).

7. Section 111 of the Clean Air Act (Standards of Performance for New Sources).

8. Section 112 of the Clean Air Act (National Emission Standards for Hazardous Air Pollutants).

After a thorough evaluation of the above alternatives, EPA concluded that a standard is needed for vinyl chloride now and that it should be developed under the authority of section 112 of the Act. Since a standard for vinyl chloride could not be based on a threshold level of effects, consideration was given to the following alternative regulatory strategies under section 112.

1. Prohibit all emissions from the manufacture and processing of vinyl chloride.

2. Minimize emissions by setting a standard which would require emission reduction to the lowest level achievable by use of best available control technology.

A decision also had to be made regarding which source categories of vinyl chloride emissions should be regulated. The source categories considered include:

1. Ethylene dichloride-vinyl chloride plants
2. Polyvinyl chloride plants
3. Polyvinyl chloride fabricating plants
4. Miscellaneous sources

The alternative regulatory strategy selected is to propose a standard based on the application of best available control technology. The source categories selected for regulation at this time are ethylene dichloride-vinyl chloride and polyvinyl chloride plants. The rationale for selecting this regulatory strategy and a discussion of the alternative strategies considered are contained in Chapter 2.

B. Alternative control levels

Once EPA decided that the standard for vinyl chloride would be based on the application of best available control technology, a second set of alternatives was examined. This second set of alternatives concerned the level of control which should be required. In Chapter 4 are discussed the alternative control systems which are available for application to the vinyl chloride industries. In Chapter 5 are outlined alternative levels of control which can be achieved with the control systems described in Chapter 4. These alternative control levels include:

1. The proposed standard
2. A more stringent standard

3. A less stringent standard

The environmental impacts of these alternative control levels are discussed in Chapter 6 and the economic and socioeconomic impacts of these alternatives are discussed in Chapter 7.

Other alternatives were considered, such as for the units of the proposed standard and the methods for determining compliance with the proposed standard. These alternatives are discussed in Chapter 8.

The matrices in Tables 1-3 and 1-4 summarize the environmental, health, economic, and social impacts of the proposed standard and alternative control levels. Some of the alternative regulatory strategies, such as setting no standards and prohibiting all emissions, are also presented in the matrix. Although health impacts are not specifically listed, they can be assumed to be directly related to the primary air impacts. The +'s and -'s in the squares indicate whether the impacts are positive or negative and the numbers beside the +'s and -'s represent a subjective estimate of the degree of the positive or negative impact on a scale of 1 to 5. The point-of-reference is the current situation, with no standard in effect.

The impacts for the proposed standard and alternative actions for ethylene dichloride-vinyl chloride plants are summarized in Table 1-3. Basically, the alternative control levels for ethylene dichloride-vinyl chloride plants differ only in the level of control required for one of several emission points in a typical plant (the oxychlorination reactor). The oxychlorination reactor was selected to present alternatives for because it is a relatively small emission source in the average plant and relatively large quantities of energy would be

Table 1-3

Matrix of Environmental and Economic Impacts
of Alternatives for Regulating Vinyl Chloride
Emissions from Ethylene Dichloride-Vinyl Chloride Plants

Administrative Action	Primary Air Impact	Secondary Air Impact	Water Impact	Solid Waste Impact	Energy Impact	Noise Impact	Economic Impact	Social or Inflation Impact
Less Stringent Standard	+3.5	-3	-1	0	-1	0	-1	-1
Proposed Standard	+4	-3	-1	0	-1	0	-1	-1
More Stringent Standard	+4.5	-3	-2	0	-4	0	-2	-2
Prohibiting Emissions	+5	0	0	0	0	0	-5	-2.5
Delayed Standard	+3	-3	-1	0	-1	0	-1	-1
No Standard	-2	0	0	0	0	0	0	0

KEY

+ Beneficial Impact
- Adverse Impact

0 No Impact
1 Negligible Impact
2 Small Impact
3 Moderate Impact
4 Large Impact
5 Extremely Large Impact

Table 1-4

Matrix of Environmental and Economic Impacts of Alternatives for Regulating Vinyl Chloride Emissions from Polyvinyl Chloride Plants

Administrative Action	Air Impact	Secondary Air Impact	Water Impact	Solid Waste Impact	Energy Impact	Noise Impact	Economic Impact	Inflation Impact
Less Stringent Standard	+2	0	-1	-1	-1	0	-2	-2
Proposed Standard	+4	0	-1	-1	-2	0	-3	-2
More Stringent Standard	+4.5	0	0	0	0	0	-4.5	-2.5
Prohibiting Emissions	+5	0	0	0	0	0	-5	-2.5
Delayed Standard	+3	0	-1	-1	-2	0	-3	-2
No Standard	-2	0	0	0	0	0	0	0

KEY

+ Beneficial Impact
- Adverse Impact

0 No Impact
1 Negligible Impact
2 Small Impact
3 Moderate Impact
4 Large Impact
5 Extremely Large Impact

necessitated if the emissions from it were required to be controlled with incineration, the most effective current method of control which could be applied to it. The alternative labeled in the matrix as "a more stringent standard" would require a level of control equivalent to incineration of the emissions from the oxychlorination reactor. The alternative labeled as "a less stringent standard" represents no control of the emissions from the oxychlorination reactor. The proposed standard represents a level of control in-between, which can be attained by control of process variables.

The less stringent standard would result in only a 90 percent emission reduction from the entire plant, compared with a 94 percent emission reduction with the proposed standard and a 97 percent emission reduction with the more stringent standard. The greater reduction in vinyl chloride emissions achievable with the more stringent standard would also result in greater secondary impacts. Incineration of the emissions from the oxychlorination reactor and control of emissions from the incinerator with a scrubber would result in more water consumption, greater emissions of hydrogen chloride to the air and water, and minute amounts of additional vinyl chloride released into the inprocess wastewater. One of the more significant secondary impacts of the more stringent standard would be the increase in energy consumption required for combustion. The more stringent standard would result in a 7 percent increase in energy consumption at an average plant. The proposed standard would require less than a 1 percent increase. The negative economic and social (inflation) impacts assigned to the more stringent standard are slightly higher than those assigned to the proposed and

less stringent standards, because the increased cost of the control equipment to achieve the more stringent standard would add somewhat to the increased price of polyvinyl chloride products to the consumer. The secondary impacts of the proposed standard and the less stringent standard are essentially the same, because they do not require combustion of emissions from the oxychlorination reactor at a typical plant. There is one plant which may have to use incineration for the oxychlorination reactor to attain the level of the proposed standard. This plant would then incur the impacts indicated for the more stringent standard.

The alternative control levels for polyvinyl chloride plants also differ only in the degree of control required for one of several emission points, i.e., emissions from sources following the stripper. The alternatives apply to the manufacture of only one type of polyvinyl chloride resin (dispersion resin), which constitutes 13 percent of the total polyvinyl chloride production. This emission point in the manufacture of dispersion resin was selected as the one to present alternatives for because it can be controlled in two ways: (1) installation of control devices such as incinerators or (2) stripping the vinyl chloride from the polyvinyl chloride resin before the resin is processed. Under proper conditions, stripping can achieve the same degree of emission reduction as add-on control devices and is much less energy consuming. For several reasons explained in more detail in Chapters 4, 5, and 8, the technology for stripping has not been developed to the same extent for dispersion resins as for other resins. There are three alternative control levels for polyvinyl chloride dispersion plants. The less stringent standard represents essentially no

control of the sources following the stripper. The proposed standard represents a level of control which is judged to be generally available within the maximum time allowed for compliance under section 112 of the Act. This level of control has been achieved by one plant for all resin grades and two plants for some resin grades. It can be achieved by all plants with the more energy-consuming add-on control technology. The more stringent standard represents the degree of stripping which is required for other polyvinyl chloride resins.

In regard to primary impact, the less stringent standard would achieve only a 52 percent reduction in emissions compared with a 95 percent emission reduction with the proposed standard and a 97 percent emission reduction with the more stringent standard. There are no significant secondary environmental impacts indicated for the three levels of control. A small economic impact is indicated for the less stringent standard and a moderate economic impact is indicated for the proposed standard. A large economic impact is indicated for the more stringent standard because EPA judged that if that degree of control were imposed, the majority of the dispersion resin manufacturers would close, at least temporarily until technology could be developed to achieve that degree of control. For this reason, no environmental or energy impacts are indicated for the more stringent standard. The inflation impacts or the price increases in consumer products due to the less stringent standard and the proposed standard are both indicated as small. A small to moderate impact is indicated for the alternative of prohibiting emissions because, in general, substitutes for polyvinyl chloride resins would be more expensive

than the resins. Since the more stringent standard would be expected to also close down dispersion resin manufacture, at least temporarily, the same inflation impact is indicated for the more stringent standard as for prohibiting emissions.

There would be more significant secondary environmental, energy, and economic impacts than indicated in the matrix if a plant elected to meet the proposed standard with add-on control devices rather than improved stripping. Since these two types of control under proper conditions achieve the same level of control, they represent alternatives for the industry, rather than for EPA to choose between. Therefore, the impacts from using add-on controls are not indicated in the matrix.

For the alternative regulatory strategy "no standard," for both ethylene dichloride-vinyl chloride and polyvinyl chloride plants, the only impact listed is a negative primary air impact. Even though unregulated plants do have an impact on other environmental media, the secondary impacts listed in the matrices represent only those effects on the environment caused by implementing controls. The primary air impact of "no standard" is negative because not only would this alternative result in a continuance of present ambient air concentrations of vinyl chloride and their associated health risks, but it would result in an increase in ambient air concentrations of vinyl chloride in some locations due to growth in the industries. As discussed in Chapter 7, the annual growth rate in the industries was approximately 10 percent between 1969 and 1974. Future growth in the industries is expected to continue at approximately this same rate, although it is possible that the rate

will decrease somewhat. Growth in production would obviously result in higher ambient air concentrations of vinyl chloride and more increased health risk with no standard in effect than with the proposed standard in effect, both in communities in the vicinity of expanding plants and in presently unaffected communities where new plants will be constructed.

The secondary environmental impacts for the alternative regulatory strategy "delayed standard" for both the ethylene dichloride-vinyl chloride and polyvinyl chloride plants are the same as for the "proposed standard," except that they would obviously be delayed in time. The primary impact of the delayed standard would be the same as the proposed standard once it went into effect. However, the primary impact is not rated as highly for "delayed standard" as for the "proposed standard," because the primary impact represents health impact, and the "delayed standard" would allow for a longer period of continued exposure to current ambient concentrations of vinyl chloride and the associated risk of adverse health effects. The secondary economic impact of a delayed standard might be less than that of the proposed standard, although this is not indicated in the matrix, because this would give the affected industries more time for research and development of more cost-effective control equipment.

The alternative regulatory strategy of prohibiting all emissions of vinyl chloride could not be attained with available control technology and would in effect ban vinyl chloride and polyvinyl chloride production. Since no control devices would be used, there would be no secondary environmental impacts. The primary impact of banning vinyl chloride

them would be insignificant.

Increased Atmospheric Emissions of Hydrogen Chloride

Atmospheric emissions of hydrogen chloride are expected to be a potential problem only at ethylene dichloride-vinyl chloride plants. This is primarily because incineration, the source of hydrogen chloride emissions, is more likely to be selected as a control method to meet the proposed standard at ethylene dichloride-vinyl chloride plants than at polyvinyl chloride plants. Polyvinyl chloride plants are expected to meet the proposed standard with control measures other than incineration.

Hydrogen chloride emissions to the atmosphere can be minimized by utilizing a scrubber after the incinerator. Due to corrosion problems which would be caused by uncontrolled hydrogen chloride emissions both on plant property and in the community, ethylene dichloride-vinyl chloride plants are not expected to use incinerat to control vinyl chloride emissions without using scrubbers to c the hydrogen chloride emissions. However, there is no assuranc that scrubbers would be used since there are no EPA regulation requiring the plants to use them. If a typical, average-sized ethylene dichloride-vinyl chloride plant did use an incinerator to meet the proposed standard and did not control the hydrogen chloride emissions, diffusion model results indicate that the maximum 24-hour average ambient concentrations would be approximately equivalent to the American Conference of Governmental Industrial Hygienists (ACGIH) 8-hour average ceiling level for occupational exposure (7000 $\mu g/m^3$) and would exceed all the existing foreign

standards and the National Academy of Sciences (NAS) recommended guidelines identified in Chapter 6 for public exposure to hydrogen chloride. [It should be noted that EPA has no standard or guideline limit for public exposure to ambient concentrations of hydrogen chloride, and thus no "yardstick" with which these diffusion model estimates can be compared. The NAS guidelines and foreign standards are the only "yardsticks" available; they have limited value because they have varying averaging times that do not necessarily correspond with the averaging times used for the diffusion modeling.]

However, as already stated, it is expected that a plant would control the hydrogen chloride emissions. A large typical ethylene dichloride-vinyl chloride plant using a 98 percent efficient scrubber to control the hydrogen chloride emissions from the incinerator would emit 10.2 kg/hr (22.6 lb/hr) hydrogen chloride. Diffusion model results indicate that the maximum 24-hour average concentrations of hydrogen chloride in the vicinity of this large plant would be 430 $\mu g/m^3$ or about 6 percent of the ACGIH's 8-hour average ceiling level for occupational exposure and below the NAS guidelines and West Germany's standard. The diffusion model results would exceed the Russian and Czechoslovakian standards, which are substantially lower than the other guidelines and standards. The Russian standard is based on concentrations which might cause reflexive reaction of the sensory organs.

In addition, ethylene dichloride-vinyl chloride plants typically already emit hydrogen chloride from process equipment. When the hydrogen chloride emissions from both the process equipment and the incinerator-

scrubber system are considered together in computing maximum ambient concentrations, the projected maximum 24-hour average ambient concentration at the large plant would be in the same range or somewhat higher than the existing foreign standards and the NAS recommended guidelines for public exposure. However, it should be noted that the emissions from the incinerator-scrubber would represent only about 25 percent of the total emissions from the two sources. In other words, the projected maximum ambient hydrogen chloride concentrations in the vicinity of the plants would already be relatively high due to emissions from the process equipment, and the incinerator-scrubber would increase these levels.

Lowered pH of Inprocess Wastewater Due to Hydrogen Chloride

Hydrogen chloride absorbed in an incinerator-scrubber control system would cause the water leaving the scrubber to have a low pH. At ethylene dichloride-vinyl chloride plants, where incinerator-scrubber systems are most likely to be used to meet the proposed standard, the pH could be less than 1. This acidic effluent could cause the total plant effluent to have a low pH since the scrubber effluent would be a sizeable portion of the total effluent stream. In order to meet the EPA effluent guidelines, the pH of the total plant effluent would have to be adjusted to 6.0 - 9.0 by recovering the hydrogen chloride to be used as a raw material by the plant or by adding caustic either to the scrubber water or to the effluent leaving the scrubber. Therefore, no additional steps to minimize the impact of this pollutant are needed.

Increased Water Consumption

Ethylene dichloride-vinyl chloride plants using incinerator-scrubbers to meet the proposed standard would increase their water consumption by less than 1 percent. Polyvinyl chloride plants

meeting the proposed standard with improved stripping for the sources following the stripper, a water purge system to control emissions from reactor opening, carbon adsorption for the monomer recovery system,and steam stripping for the inprocess wastewater, would increase their water consumption by 6 to 38 percent, depending on the manufacturing process. EPA's Office of Water and Hazardous Materials is currently investigating whether these increases in water consumption to meet the proposed standard for atmospheric emissions of vinyl chloride would require a change in EPA's Effluent Guidelines and Standards for ethylene dichloride-vinyl chloride and polyvinyl chloride plants (39 FR 12506 and 39 FR 14678). After the investigation is completed, appropriate changes will be made in the guidelines and standards as needed.

Increases in the Quantity of Vinyl Chloride in Inprocess Wastewater

Incinerator-scrubbers used at ethylene dichloride-vinyl chloride plants to meet the proposed standard would increase the quantities of vinyl chloride released into the wastewater by less than 0.1 percent. The increase in vinyl chloride released into wastewater at polyvinyl chloride plants meeting the proposed standard could be more significant if the plants used steam for improved stripping, steam to desorb vinyl chloride from a carbon adsorption unit, or a water purge system to remove vinyl chloride from reactors before opening them to the atmosphere. However, any increases in vinyl chloride released into the wastewater from these sources at polyvinyl chloride plants are expected to be minimized by the proposed standard, which would require that vinyl chloride emissions to the atmosphere from the more highly concentrated inprocess wastewater streams be controlled by removing the vinyl chloride from the wastewater. Therefore, no addi-

tional steps need to be taken to minimize this potential adverse impact.

Increased Solid Waste Disposal Due to Carbon Used for Adsorption

Although carbon used in adsorption is continuously desorbed and recycled, it is expected that it may have to be replaced every 1 to 3 years. Since there has been very limited experience with carbon adsorption in the ethylene dichloride-vinyl chloride or polyvinyl chloride industries, it is not known for certain at this time what the carbon bed-life would be or whether the damaged carbon could be regenerated. If polymerization occurred on the carbon, it could be regenerated by oxidizing the polymer. If the structural characteristics which make carbon desirable, however, were damaged, it could not be regenerated. In meeting the proposed standard, the most likely emission point to be controlled by carbon adsorption is the monomer recovery system in polyvinyl chloride plants. For an average-sized plant an adsorption unit used for this purpose would require 3450 kg of carbon (7,600 lb of carbon). If this were thrown away every year, it would represent 3 percent of the total solid waste generated by an average-sized plant. This appears to be an insignificant impact. In addition to the problem of bulk, however, there may be problems in disposal of the carbon associated with residual vinyl chloride or other materials collected on the carbon. The significance of any such problems is not known at this time. The carbon could also be burned in a boiler as a low sulfur fuel, but may cause air pollution problems associated with conversion of chlorinated hydrocarbons to hydrogen chloride.

Increased Energy Consumption

Typical ethylene dichloride-vinyl chloride plants using incineration to meet the proposed standard would require less than a 1 percent

increase in energy consumption. This is because only the emissions from the ethylene dichloride purification and vinyl chloride formation and purification processes would be required to be incinerated, and little if any supplemental fuel would be required for their combustion.

Polyvinyl chloride plants using incineration to meet the proposed standard would increase their energy consumption very significantly ("typical" suspension plants, 223 percent; "typical" dispersion plants, 836 percent; and "typical" bulk plants, 166 percent) primarily due to the supplemental fuel which would be required for control technology to reduce emissions from dryers, storage, and transfer operations. Improved stripping would require a much smaller percent increase in energy consumption ("typical" suspension plants, 15 percent; "typical" dispersion plants, 81 percent; and "typical" bulk plants, 50 percent).

Summary

Based on the above discussion, the potential secondary or adverse environmental impacts of the proposed standard are either insignificant or will be minimized without additional action, except for two. First, EPA may find it necessary, as a result of current investigations, to make some changes in the water effluent guidelines and standards, particularly for polyvinyl chloride plants. Second, hydrogen

chloride is already emitted by process equipment at ethylene dichloride-vinyl chloride plants and by other petrochemical plants in the complexes where ethylene dichloride-vinyl chloride plants are typically located. An incinerator used to attain the proposed standard at an ethylene dichloride-vinyl chloride plant could increase its hydrogen chloride emissions by several fold. Typically, however, due to the corrosion problems which would otherwise occur both on plant property and in the community, plants use scrubbers to control already existing hydrogen chloride emissions. Hydrogen chloride emissions resulting from control of vinyl chloride emissions are expected to also be controlled for the same reason. If even a moderately efficient scrubber (98 percent control) were used to control the hydrogen chloride emissions resulting from incineration of vinyl chloride emissions, the increase in hydrogen chloride emissions from a typical ethylene dichloride-vinyl chloride plant due to the proposed standard would be reduced to 35 percent. However, since diffusion model results indicate that under "worst-case" meteorological conditions, the hydrogen chloride emissions from the process equipment and the incinerator combined would cause maximum ambient concentrations of hydrogen chloride in the vicinity of ethylene dichloride-vinyl chloride plants to be in the same range or somewhat higher than existing foreign standards and National Academy of Sciences (NAS) guidelines for public exposure, EPA plans to further evaluate the need to control hydrogen chloride emissions. NAS is currently preparing a report on the health effects of hydrogen chloride for EPA. A

final draft of that report is scheduled for completion by the end of 1975. At that time, EPA will assess the hydrogen chloride problem.

1.2.3 Relationship Between Local Short-Term Uses of Man's Environment and the Maintenance and Enhancement of Long-Term Productivity

By taking steps now to establish standards based on best available control technology to minimize vinyl chloride emissions, EPA will be able to minimize exposure and prevent severe illnesses and deaths which may have occurred in future years as a result of prolonged community exposure to vinyl chloride. Therefore, the proposed standard may curtail industrial expansion on a short-term basis, as a result of funds being diverted from support of industrial expansion to support of installation of process changes and control systems to attain the standard; but it will enhance the long-term productivity of man and his environment.

1.2.4 Irreversible and Irretrievable Commitments of Resources Which Would Be Involved if the Proposed Action Should Be Implemented

Irreversible and irretrievable resources which would be committed to reduce ambient concentrations of vinyl chloride include energy and the materials to construct incinerators, boilers, monitoring equipment, carbon adsorption units, etc. If incineration were used to meet the standard, additional energy and materials would be needed for operation of an absorption unit to abate hydrogen chloride emissions.

1.3 Economic Impact

In accordance with Executive Order 11821 and OMB circular A-107, EPA has carefully evaluated the economic and inflationary impacts of the proposed standard. This economic analysis is contained in Chapter 7, and includes the costs of control systems which can be used to attain the proposed standard and alternative control levels, and the impact of these costs on the vinyl chloride industries and the public consumer. The total estimated capital cost for existing plants to meet the proposed standard is $198 million, of which $15 million is for ethylene dichloride-vinyl chloride plants and $183 million is for polyvinyl chloride plants. The total annualized costs for attainment of the proposed standard are estimated to be $70 million, of which $12 million is for ethylene dichloride-vinyl chloride plants and $58 million is for polyvinyl chloride plants.

Also, included in the economic analysis were the costs of the OSHA standard which the plants are subject to and the EPA water effluent guideline limitations which the plants will be subject to in 1983 (best available control technology economically achievable). The total capital cost for existing plants to meet the EPA water effluent guideline limitations is $83 million, of which $35 million is for ethylene dichloride-vinyl chloride plants and $48 million is for polyvinyl chloride plants. The total annualized cost to meet the effluent guideline limitations is $17 million, of which $7 million is for ethylene dichloride-vinyl chloride plants and

$10 million is for polyvinyl chloride plants. The costs to the industry of meeting the OSHA standard cannot be quantified at this time, but they are expected to overlap to some degree with the costs to meet the fugitive emission regulations in the proposed standard. The capital cost to meet the fugitive emission regulations is $37 million and the annualized cost is $25 million.

The proposed standard would not deter construction of new ethylene dichloride-vinyl chloride plants or new polyvinyl chloride suspension or bulk plants. For polyvinyl chloride dispersion plants (which constitute 13 percent of the industry production), the proposed standard would significantly deter the construction of new plants that have capacities of less than 45 million kg/yr (100 million lb/yr) but would not deter construction of plants larger than 45 million kg/yr. Total costs for attainment of the proposed standard and the effluent guideline limitations are estimated to result in the closing of no ethylene dichloride-vinyl chloride plants and four small polyvinyl chloride plants. These four plants are estimated to employ 30 people and account for approximately 0.5 percent of existing industry capacity. It is estimated that the four plant closures resulting from imposition of the proposed standard would have occurred if only the costs of fugitive emission controls were incurred.

It is estimated that the price of polyvinyl chloride resins would rise by approximately 7.3 percent in order to maintain precontrol profitability and also to recover the total annualized control costs necessitated by the proposed standard at ethylene

dichloride-vinyl chloride plants and polyvinyl chloride plants

This increase is estimated to translate into a maximum consumer price increase in goods fabricated from polyvinyl chloride resins of approximately 3.5 percent. Recovery of effluent annualized costs plus maintenance of precontrol profitability is estimated to add approximately 2 percent to polyvinyl chloride resin prices and result in an additional maximum consumer price increase of 1 percent.

2. RATIONALE FOR REGULATING VINYL CHLORIDE

2.1 History

In January 1974, the B. F. Goodrich Chemical Company reported to the National Institute of Occupational Safety and Health (NIOSH) that several of its employees had died from angiosarcoma of the liver (a rare form of cancer) and that those deaths may have been related to occupational exposure to vinyl chloride gas. This report resulted in growing concern over the potential health effects of vinyl chloride and spurred efforts by various government agencies to take steps to obtain data needed to assess in more detail the impact of vinyl chloride on human health and to reduce vinyl chloride exposure both to the worker and to the general population. EPA established a Task Force on vinyl chloride in February 1974, to identify the environmental problems resulting from the manufacture and use of vinyl chloride and polyvinyl chloride. While air, water, and solid waste disposal are all possible routes for entry of vinyl chloride into the environment in the vicinity of manufacturing facilities, the Task Force concluded that, based upon current information, the air route poses the most significant environmental problem to the population located there.[1] Potential sources of exposure to the general population due to the use (as opposed to the manufacture) of vinyl chloride include aerosol containers, plastics used for containing or wrapping food products, and drinking water.

On April 26, 1974, EPA published in the FEDERAL REGISTER an emergency suspension order for specific indoor aerosol pesticides

containing vinyl chloride. In May 1974, EPA initiated a study to determine whether Federal regulation of atmospheric emissions of vinyl chloride from manufacturing facilities is needed and, if so, which of the regulatory alternatives under the Clean Air Act would be most appropriate. For the purpose of the study, data were gathered on health effects, air quality concentrations, control techniques, and costs.

2.2 Alternative Control Strategies Considered

The Administrator of EPA considered several approaches to dealing with air emissions of vinyl chloride. The main alternatives were taking no action, delaying action until more data on health effects at lower concentrations of vinyl chloride are available, taking action under section 115 or 303 of the Clean Air Act, or setting standards under section 109, 111, or 112 of the Clean Air Act.

2.2.1 No Action or Delayed Standards

Factors considered in determining whether Federal regulatory action is needed for vinyl chloride emissions and, if so, whether it is needed at this time, included the health effects of vinyl chloride, the extent of public exposure to vinyl chloride, and the degree to which other regulations are reducing vinyl chloride emissions.

2.2.1.1 Summary of Health Findings[2]

Vinyl chloride has been shown to cause cancer in both sexes of three species of rodents by the inhalation route, the primary route by which humans who live in the vicinity of plants manufacturing

or processing vinyl chloride are exposed. Angiosarcoma of the liver has been observed in rats, hamsters, and mice exposed to vinyl chloride. In two of these species, rats and mice, liver angiosarcoma has been produced at exposure levels as low as 50 parts per million (ppm), which is the lowest level for which studies have been completed thus far. In one experiment, exposure levels as low as 50 ppm for four hours per day, five days per week for a 12 month period produced nephroblastomas and liver angiosarcoma after 135 weeks. In a second experiment, angiosarcoma in mice has been produced by exposures as low as 50 ppm for a 26 week duration. Furthermore, these animal studies showed a multiple cancer risk from vinyl chloride, i.e., tumors in organs other than the liver such as the brain, lungs, kidneys, and mammary glands.

As of June 1975, the National Cancer Institute had confirmed 27 cases of liver angiosarcoma among workers with a history of exposure to vinyl chloride, 15 in the United States and 12 in Europe and Canada. Additionally 11 cases had been reported and not yet confirmed. Most, but not all, of these confirmed cases have been among workers involved directly in polyvinyl chloride production. Cases of liver angiosarcoma have been reported in one U. S. and three European workers exposed to vinyl chloride, but not directly involved in polyvinyl chloride production. These cases suggest that exposure to vinyl chloride at lower levels than usually encountered in polyvinyl chloride production plants is capable of causing liver angiosarcoma.

To date, angiosarcoma of the liver has been considered an extremely rare disease among the general population. In a survey

by the American Cancer Society, only one case of liver angiosarcoma was recorded per 78,000 deaths. Compared with this record, the data indicating the frequency of liver angiosarcoma among workers exposed to vinyl chloride show that the relative risk to these workers of developing this disease is approximately 3,000 times greater than that to the general population. Such a relative risk represents a statistically significant difference ($p < 0.001$) in the frequency of liver angiosarcoma among those exposed to high levels of vinyl chloride compared with those in the general population.

Occupational exposure studies have strongly implicated vinyl chloride as a human chemical carcinogen which causes tumors in many different sites, only one of which is angiosarcoma of the liver. Other manifestations in humans include acroosteolysis and liver dysfunction. Similar toxicology studies have verified the occurrence of tumors in other body organs such as the brain and lungs. Bioassay studies have shown the potential of vinyl chloride to be a chemical mutagen and teratogen. (More details on these animal and occupational studies may be found in the Scientific Technical Report on Vinyl Chloride and Polyvinyl Chloride[2].)

2.2.1.2 Extent of Public Exposure to Vinyl Chloride

Generally, the population exposed to vinyl chloride emissions is composed of those people living within the vicinity of the approximately 17 ethylene dichloride-vinyl chloride plants, 41 polyvinyl chloride plants, 8000 fabricating plants, and 8 identified miscellaneous sources.

Results from a preliminary ambient monitoring program conducted by EPA in the spring of 1974 indicate that people living in the immediate vicinity of ethylene dichloride-vinyl chloride and polyvinyl chloride plants are generally exposed to average daily concentrations of less than 1 ppm with some 24-hour average excursions of 1 to 3 ppm and with occasional peak exposures of as high as 33 ppm[3]. Results from a more extensive ambient monitoring program conducted by EPA from November 1974 to June 1975 are not discussed in detail here because they are still being analyzed. The results are generally in the same range as reported here for the preliminary ambient monitoring program except there are no concentrations as high as 33 ppm.

If ethylene dichloride-vinyl chloride and polyvinyl chloride industries are not regulated, community exposure to vinyl chloride may increase as the industries expand. The growth rate in consumption of vinyl chloride and polyvinyl chloride between 1969 and 1974 averaged approximately 10 percent per year. Future growth in consumption is expected to continue at approximately this same rate, although it is possible that the rate will decrease somewhat. Assuming that the growth rate in capacity would be the same as for consumption, at a 10 percent growth rate, current capacity would double in approximately 7 years.

2.2.1.3 Other Regulations and Their Effect on Vinyl Chloride Emissions

At least some reduction of vinyl chloride emissions may be expected as the result of the standard promulgated by the Occupational Safety and Health Administration (OSHA) on October 4, 1974, and some State regulations for new construction and for hydrocarbon emissions. These regulations are described in Chapter 9.

In response to the OSHA regulation which became effective April 1, 1975, the ethylene dichloride-vinyl chloride and polyvinyl chloride industries have adopted some measures which not only reduce employee exposure, but also reduce emissions to the atmosphere. However, other methods of reducing employee exposure to vinyl chloride, such as respiratory protection, ventilation of the workplace, opening sides of buildings, and installing tall stacks do not reduce the emissions to the atmosphere. Although the OSHA standard requires all employers to institute feasible controls to the fullest extent possible and to continue to improve and apply engineering controls until full compliance is achieved, it does not establish any deadlines for compliance through engineering controls. Written plans demonstrating how plants will achieve this goal must be drawn up and made available, upon request, to representatives of OSHA and NIOSH; however, for submittal of formal plans, there is also no deadline. For these reasons, it is difficult at this time to evaluate the degree to which the OSHA regulation will reduce vinyl chloride emissions to the atmosphere. It is assumed, however, that the plants will respond to the OSHA regulation with a combination of ventilation techniques, emission reduction, and respiratory protection and that this response will not be uniform.

As the result of some State regulations for new sources and for hydrocarbon emissions, some newly constructed polyvinyl chloride plants and the oxychlorination process at some existing ethylene dichloride-vinyl chloride plants are required to be controlled.

The State regulations, however, do not necessarily cover all emission points, nor do they require the same degree of emission reduction as the proposed standard. Additionally, the State regulations are not expected to be uniform in the degree of control they require.

2.2.1.4 Conclusions

Based on the analysis summarized above, EPA concluded that vinyl chloride is a carcinogen, that ambient concentrations of the gas pose a public health risk, and that the alternative of taking no action to regulate it is unacceptable. The alternative of delaying the standard setting would allow acquisition of additional information, but it is likely that gaps in the relevant information would still remain. Due to the expected long latency period between initial exposure to vinyl chloride and occurrence of disease, it will be many years before useful epidemiological data will be available on the effects of lowered occupational exposure resulting from the OSHA regulation. Therefore, EPA has further concluded that ambient concentrations of vinyl chloride should not be allowed to persist until all information gaps are filled. If EPA were to wait until all needed data were available to establish precise dose-response relationships, a standard could be long delayed, and the public might be exposed to substantial and irreversible harm in the interim. Moreover, the risks to the public could increase as the industry expands.

2.2.2 Action under Section 115 - Abatement Conferences

Section 115 of the Act gives EPA the authority to call abatement conferences in cases where an air pollutant endangers the health or welfare of persons. Such conferences may be requested by a

State or city when the pollutant originates within their jurisdiction or when the problem originates elsewhere but poses a problem within their area. EPA may initiate conferences if the pollutant problem exceeds State boundary lines. An abatement conference covers many subjects, including information on occurrence of the air pollutant, adequacy of abatement actions, and the amount of delay that may be encountered in abating the pollution.

For vinyl chloride, abatement conferences would have to be initiated by at least 16 States and Puerto Rico where all of the ethylene dichloride-vinyl chloride and polyvinyl chloride plants are located. Generally, EPA would not be able to call abatement conferences since vinyl chloride problems are localized and not interstate, but EPA could encourage the States to call such conferences. Once appropriate abatement actions were determined during the conferences, the States involved would have to initiate such actions. If abatement actions were not initiated, EPA would have six months to hold hearings and request that abatement action be taken within a reasonable time not to exceed six months. If the States or industry failed to act, EPA would have to file suit in the appropriate U. S. District Court to enforce the abatement action.

In general, this procedure is unwieldy, requires a significant amount of manpower, and based on past experience, may not bring about the required abatement measures. Abatement conferences, therefore, are not considered an effective approach to controlling vinyl chloride.

2.2.3 Action under Section 303--Emergency Powers

Section 303 of the Act allows the Administrator to bring suit, in the appropriate U. S. District Court, to restrain any person causing or

contributing to air pollution that presents an "immiment and substantial endangerment to the health of persons." The Administrator may seek to stop pollutant emissions or take other action as may be necessary. This mechanism has been used once by EPA. In 1971, court injunctions were obtained against plants in Birmingham, Alabama during an air pollution episode to reduce concentrations of particulate matter below dangerous levels.

EPA has concluded that in the case of vinyl chloride where permanent regulatory control of a continuing problem is possible, that control is preferable to Section 303. Additionally, using Section 303 could be cumbersome since injunctions may have to be obtained in each U. S. District Court that has a source of vinyl chloride within its jurisdiction.

2.2.4 Standards under Section 109--National Ambient Air Quality Standards (NAAQS)

The purpose of air quality standards is to control air pollutants which have an adverse effect on public health and welfare and which are present in the ambient air due to numerous or diverse stationary or mobile sources. Primary standards are set at levels requisite to protect the public health, allowing an adequate margin of safety. Secondary standards are set at levels requisite to protect the public welfare from any known or anticipated adverse effects.

Section 109 is usually used to control a pollutant whose presence in the ambient air is ubiquitous. Vinyl chloride is emitted from ethylene dichloride-vinyl chloride plants, polyvinyl chloride plants, polyvinyl chloride fabricating plants, and a few miscellaneous sources.

Detectable concentrations of vinyl chloride have not yet been found in the ambient air except in the vicinity of these sources.

Establishing a national ambient air quality standard (NAAQS) for vinyl chloride would set into motion preparation of State implementation plans (SIP) for each of the 247 air quality control regions (AQCR's) to demonstrate attainment and maintenance of the standard. This is a complex process and is not generally considered the optimum regulatory approach for situations involving a limited number of source categories. The time required to implement the NAAQS/SIP process is estimated to be 6 months for setting a standard plus 13 months to develop and approve the SIP's. Compliance with the standards must be within 3 to 5 years after the SIP's are approved.

EPA concluded that Section 109 is not the most suitable alternative for controlling vinyl chloride because vinyl chloride is a localized problem and because the NAAQS/SIP process is time-consuming and complex, and requires considerable State and Federal resources. Furthermore, Section 109 does not provide the expedited means of control which Congress meant to be used for a hazardous air pollutant.

2.2.4.1 Section 109--Existing National Ambient Air Quality Standard for Nonmethane Hydrocarbons

There exists a NAAQS for nonmethane hydrocarbons which possibly could be used as an indirect regulatory mechanism for controlling vinyl chloride. However, the hydrocarbon standard is clearly intended as a guide to achieving the NAAQS for photochemical oxidants. 40 CFR 51.14(c)(4) provides that the degree of total hydrocarbon emission

reduction necessary for attainment and maintenance of the NAAQS for photochemical oxidants will also be adequate for the attainment of the NAAQS for hydrocarbons. States now have approved control strategies for hydrocarbon/oxidants and are progressing toward fulfilling the requirements of their respective strategies. To change the SIP's, EPA would have to present findings that the plans are inadequate and would have to require resubmittal of the plans. This would reopen a full review of the hydrocarbon/oxidant control strategies, including the transportation control plans. Hydrocarbon/oxidant strategies have focused on area-wide hydrocarbon emissions and it would be difficult to justify singling out vinyl chloride sources for control. Vinyl chloride is less photochemically reactive than many other petrochemicals and does not contribute significantly to total urban hydrocarbon emissions.

Moreover, the hydrocarbon standard regulates only the 6-9 a.m. concentrations of nonmethane hydrocarbons. During the remaining 21 hours of the day, control of vinyl chloride emissions could not be required under existing SIP's. Since the NAAQS is for hydrocarbons in general, there is no way to require States to regulate vinyl chloride in particular. For the above reasons, control of vinyl chloride under the existing NAAQS for hydrocarbons would not be appropriate or effective.

2.2.5 Standards under Section 111--Standards of Performance for New Stationary Sources (SPNSS)

Standards of performance for new stationary sources apply to categories of sources that emit pollutants which may cause or contribute

to the endangerment of public health or welfare. New sources are controlled under Section 111(b) and existing sources, under Section 111(d). [Section 111(b) standards can be established for pollutants already regulated under the authority of sections 109 or 112, whereas section 111(d) standards cannot.] Such standards reflect the use of the best system of emission reduction (considering cost) which has been adequately demonstrated for the affected source. The level of control set by EPA need not be related directly to the adverse effects of the air pollutant.

The standard setting process begins by listing in the FEDERAL REGISTER categories of sources for which the Agency intends to set standards of performance. Within 120 days after listing, standards for these sources must be proposed and public comments solicited. Within the next 90 days the Administrator must consider the public comments and promulgate the standards. Any new source which commences construction after the proposal of the standard must comply.

To control existing sources emitting health-related pollutants under Section 111(d), the Agency proposes and promulgates emission guidelines that describe the degree of emission control achievable with best demonstrated control systems, considering costs. Also, proposed and promulgated is the time within which EPA believes that compliance with such emission guidelines can be achieved. Within 9 months after promulgation of the emission guidelines, the individual States must submit a plan for implementing emission standards for existing sources of the pollutant (in this case, vinyl chloride). After the plans are received, EPA has 4 months to approve or disapprove the plans and, if

a State plan is unacceptable, two months more to promulgate EPA regulations. To be approved, State plans must contain emission standards at least as stringent as the EPA emission guideline. However, in cases where existing sources would incur severe economic hardship or would risk closure if forced to comply with the emission guidelines, less stringent State standards could be approved. Furthermore, a State could issue a variance allowing the source to continue operations without full compliance with a standard.

As noted above, the use of section 111 would require the use of best demonstrated control technology, taking cost into account. The best available systems for controlling vinyl chloride emissions have been used within existing ethylene dichloride-vinyl chloride and polyvinyl chloride plants. Since those control systems appear to be economically feasible, emission standards reflecting the use of best available control technology would be required under section 111 and would achieve considerable emission reduction at both ethylene dichloride-vinyl chloride and polyvinyl chloride plants. However, consideration of costs could result in lower levels of emission reduction being required at some individual existing plants.

After very close examination, EPA concluded that section 111 is not the best mechanism for controlling vinyl chloride. Specifically, the length of time required under section 111(d), the possibility of differing levels of control from State to State, State-granted variances that may be based only on cost considerations, and standard development as a State rather than a Federal process were all features that made section 111 unacceptable for vinyl chloride.

2.2.6 Standards under Section 112--National Emission Standards for Hazardous Air Pollutants (NESHAP)

Section 112 was incorporated in the Clean Air Act to control pollutants which, in the Administrator's judgment, may cause, or contribute to, an increase in mortality or an increase in serious irreversible, or incapacitating reversible, illness. Emission standards should be set at levels that provide an ample margin of safety to protect the public health from the atmospheric emissions of the pollutant. Emission standards under section 112 apply to all new and existing sources of the pollutant.

To set a standard under section 112, EPA must list vinyl chloride as a hazardous pollutant in the FEDERAL REGISTER. Within 180 days of the listing, the Administrator must propose a national emission standard which, in his judgment, adequately protects public health. Within 30 days, the Administrator must give notice of a public hearing to be held to examine his judgment that the pollutant is hazardous. Allowance must also be made for comments on the proposed standard from the public and scientific and industrial communities. The Administrator can withdraw a pollutant from the hazardous list only if he finds, on the basis of information presented at the public hearing, that the pollutant clearly is not hazardous. Otherwise, the Administrator must promulgate a standard within 180 days of the proposal. Section 112 does not require that in setting a standard the Administrator consider available control technology or economic impact. However, EPA must, from time to time, issue information on control technology.

2.2.6.1 Vinyl Chloride as a Hazardous Pollutant

In deciding whether section 112 would be an appropriate regulatory strategy for vinyl chloride, it had to be determined whether vinyl chloride meets the specifications of a hazardous air pollutant as defined in the Act. "Hazardous air pollutant" is defined in section 112 as "an air pollutant ... which in the judgment of the Administrator may cause, or contribute to, an increase in mortality or an increase in serious irreversible, or incapacitating reversible, illness."

Vinyl chloride appears to be such a hazardous air pollutant. As noted earlier in this chapter (section 2.2.1.1), data taken from animal experiments and occupational exposure studies have strongly indicated that vinyl chloride causes or contributes to angiosarcoma, other cancers, and noncarcinogenic disorders in people with occupational exposure and in animals with experimental exposure to vinyl chloride. Reasonable extrapolations from these findings cause concern that present ambient levels of vinyl chloride may cause or contribute to the same or similar disorders. Data obtained in the spring of 1974 from plants that produce or process vinyl chloride indicate that approximately 100 million kg of vinyl chloride are emitted to the atmosphere annually. The majority of these emissions are from ethylene dichloride-vinyl chloride and polyvinyl chloride plants. Approximately 4.6 million people live within a five mile radius of where these plants are located.[4] There are no dose-response data, and thus no absolute proof of adverse effects, at the concentrations of vinyl chloride found in the ambient air. However, for carcinogens there may be no atmospheric concentration which poses absolutely no public health risk. Also,

data from studies of occupational exposure indicate that there is a latency period as long as 20 years between initial exposure to vinyl chloride and occurrence of disease. This latency period could possibly be longer for low levels of exposure. Production of polyvinyl chloride did not begin to operate on a large scale until relatively recently. Only about 10 of the approximately 40 polyvinyl chloride plants are 20 years old or older, and the oldest one is 40 years old. These considerations led to the conclusion that EPA should take action now to reduce exposure levels to vinyl chloride before retrospective evidence of risk is allowed to show itself. By taking steps now to reduce emissions, EPA will be able to reduce substantially the risk that severe illness and death will occur in the future as a result of present and prolonged community exposure to vinyl chloride.

EPA's conclusions are supported by The Evaluation of Environmental Carcinogens which was completed on April 22, 1970, by the Ad Hoc Committee on the Evaluation of Low Levels of Environmental Chemical Carcinogens. The Ad Hoc Committee was formed in response to a request by the Deputy Assistant Secretary for Health and Scientific Affairs of the Department of Health, Education, and Welfare (HEW). The Committee was to review the problems relating to the evaluation of low levels of environmental chemical carcinogens, to consider the scientific bases on which such evaluations can be made, and to advise the Department of HEW on the implications of such evaluations. The report to HEW includes the following conclusions and recommendations:[4]

(1) "Any substance which is shown conclusively to cause tumors in animals should be considered carcinogenic and therefore a potential cancer hazard for man."

(2) "Because the latent period in human carcinogenesis is so long, epidemiologic evidence develops only over periods of 15 to 20 years. Timely decisions to exclude materials from uses involving exposure to man, therefore, must be based solely on adequately conducted animal bioassays. Retrospective human evidence of risk must not be allowed to show itself before controlling action is taken. Chemicals should be subjected to scientific scrutiny rather than given individual rights; they must be considered potentially guilty unless and until proven innocent."

(3) "No chemical substance should be assumed safe for human consumption without proper negative lifetime biological assays of adequate size. The minimum requirements for carcinogenesis bioassays should provide for adequate number of animals of at least two species and both sexes with adequate controls, subjected for their lifetime to the administration of a suitable dose range, including the highest tolerated dose, of the test material by rates of administration that include those by which man is exposed."

(4) "No level of exposure to a chemical carcinogen should be considered toxicologically insignificant for man. For carcinogenic agents a safe level for man cannot be established by application of our present knowledge. The concept of 'socially acceptable risk' represents a more realistic notion."

Several court decisions also support EPA's decision. In Environmental Defense Fund, Inc. v. Environmental Protection Agency, 510 F.2d 1292 (D. C. Cir. 1975), which questioned the protection of the manufacture and sale of aldrin and dieldrin, Judge Leventhal recognized (1) consideration of the long latency period in cancer, (2) the finding that the concept of threshold level has no practical significance for carcinogens, and (3) the extrapolation to humans from animal test data, as valid grounds for EPA's decision-making. See also Environmental Defense Fund, Inc. v. Ruckelshaus, 142 U. S. App. D. C. 74, 439 F. 2d 584 (1971) on animal test data. Furthermore, in the preamble to the October 1974 OSHA regulation for vinyl chloride, The Evaluation of Environmental Carcinogens was cited as partial support for the level of the standard. This regulation was upheld by the U. S. Court of Appeals for the Second Circuit in the case of Society of the Plastics Industry v. Occupational Safety and Health Administration, 509 F. 2d 1309 (1975), cert. den, sub nom. Firestone Plastics Co. v. U. S. Department of Labor, 43 U. S. L. W. 3623 (1975). In its decision, the Court of Appeals stated that much of OSHA's evidence for the regulation was based on animal exposure to vinyl chloride, with only indirect human evidence, but that

> ...nevertheless, it remains the duty of OSHA to protect the working man, and to act even in circumstances where existing methodology or research is deficient.

The panel also stated that the evidence on vinyl chloride's dangers was "quite sufficient" to merit OSHA's regulations.

2.3 Setting an Emission Limit

A concurrent issue before EPA was what level of emission control could or should be required under section 112. Section 112 provides

that the Administrator shall set an emission standard "at the level which in his judgment provides an ample margin of safety to protect the public health from such hazardous air pollutants." The problem presented was how this provision should be interpreted when dealing with an apparent non-threshold pollutant that is hazardous at some level. The term "non-threshold pollutant" refers to a substance which creates a risk of adverse health effects at all ambient levels (other than zero). An "apparent non-threshold pollutant" is, quite simply, a substance which, on the basis of available information, appears to be a non-threshold pollutant. An apparent non-threshold pollutant may be known to be "hazardous" within the definition of section 112 at some levels, and create a risk to public health at all levels. Vinyl chloride is such a pollutant. It clearly causes angiosarcoma, other cancers, and noncarcinogenic disorders in animals which have been experimentally exposed to vinyl chloride and in people with occupational exposure. However, an emission standard for vinyl chloride cannot be established below a threshold level of effects because, as noted above, no dose-response data are available for the concentrations of vinyl chloride found in the ambient air. Further, it is EPA's position that for a carcinogen it should be assumed, in the absence of strong evidence to the contrary, that there is no ambient concentration that poses absolutely no public health risk. The issue is how far the level of such pollutants should be reduced to provide "an ample margin of safety."

2.3.1 The Alternative of Prohibiting Vinyl Chloride Emissions

EPA considered that section 112 might be interpreted to require a

complete prohibition of emissions of any apparent non-threshold pollutant. This zero emission limitation would be the only emission standard which would offer absolute safety from ambient exposure. Establishing zero emission limits would in effect ban domestic vinyl chloride and polyvinyl chloride production because ethylene dichloride-vinyl chloride and polyvinyl chloride plants could not comply with zero emission limits using currently feasible control technology.

2.3.1.1 Direct Impact.

The direct impact of banning vinyl chloride and polyvinyl chloride production would be on the producing companies and their employees and in the regions in which these companies are located. Twenty-eight companies would be directly impacted. However, the lack of detailed financial information for privately-held companies and of profit data about vinyl chloride and polyvinyl chloride output for publicly-held companies make an assessment of probable company failure difficult.

For 27 companies, however, EPA approximated dependency on vinyl chloride and polyvinyl chloride production by comparing estimated vinyl chloride and polyvinyl chloride sales to total sales. In doing this, EPA recognized that the estimated percentage of vinyl chloride and polyvinyl chloride sales is not necessarily the same as the estimated percentage of profits. Based on sales information, three of the 27 companies are judged to be highly dependent upon vinyl chloride and polyvinyl chloride production. The three companies are all polyvinyl chloride fabricators as well as producers. With a ban on vinyl chloride and polyvinyl chloride production, all three would probably fail. For the one firm for which sales data are unavailable,

no estimation of probable company failure is possible.

Prohibiting vinyl chloride emissions and, therefore, banning production would have grave effects on employment. Direct employment impacts on a per plant basis are not known, but estimates of total employment are available. According to these estimates, there are approximately 940 people employed in vinyl chloride production and 5600 people in polyvinyl chloride production. Thus, over 6500 people would lose their jobs as a result of prohibiting vinyl chloride emissions. Although many skills used in vinyl chloride and polyvinyl chloride production are readily transferrable to other industries, the extent that this transfer would occur is not known. At any rate, transfer would not be immediate.

For ethylene dichloride-vinyl chloride plants, immediate regional impacts of a ban would be felt primarily in the areas of southeastern Texas and southern Louisiana where 14 of the 17 plants are located. In certain instances, vinyl chloride output goes to other regions as well. For polyvinyl chloride plants, the immediate impacts would be more dispersed geographically. Although some polyvinyl chloride plants are located in the southeastern Texas-southern Louisiana area, most are located in Delaware, New Jersey, New York, and Massachusetts. In all of these areas, multiplier impacts in terms of decreased output, unemployment, and lowered income could be expected.

2.3.1.2 Indirect Impacts

The indirect impacts of prohibiting emissions (and thereby banning vinyl chloride and polyvinyl chloride production) would be felt

primarily by raw material suppliers (ethylene dichloride producers) and by product output receivers (polyvinyl chloride fabricators). There are 11 firms producing ethylene dichloride at 17 plants. About 80 percent of their ethylene dichloride output goes to vinyl chloride and polyvinyl chloride plants. With one exception (Vulcan Materials), all companies also produce either vinyl chloride or polyvinyl chloride or both. Because much ethylene dichloride output appears captive, the impact of lost ethylene dichloride revenues has probably been counted in terms of lost vinyl chloride and polyvinyl chloride sales. Vulcan Materials would not be expected to fail in the event of a ban, because it does not rely heavily on ethylene dichloride sales.

The Chemical Economics Handbook estimates the number of polyvinyl chloride fabricating plants to be 8,000.[6] It is not known how many of the 8,000 are independent or how many are affiliated with larger companies. The economic viability of the fabricator has not been analyzed. However, the more dependent these companies are upon vinyl chloride and polyvinyl chloride input, the more likely is the possibility of failure.

There are no estimates of domestic ethylene dichloride employment and, therefore, no determination of potential impact. For polyvinyl chloride fabrication, total direct and indirect employment loss with no transfer of jobs or raw material substitutes is estimated by Arthur D. Little, Inc. to be 1.7 to 2.2 million jobs.[7] This estimate includes not only persons employed by fabricating plants, but also persons employed in utilization of the fabricated products, such as auto and construction workers. The estimate amounts to over 1 percent of the 1972 labor force.

Nearly all ethylene dichloride production occurs in southeastern Texas and southern Louisiana. Since most vinyl chloride production occurs here and some polyvinyl chloride production occurs here as well, this area could conceivably be hard hit. This is especially true if the affected resources could not be transferred to other uses in the area.

Although no location maps for fabricating plants have been developed, the number of, and the wide variety of outputs from, polyvinyl chloride fabricators suggests no geographic concentration. If there are any clusters of plants, they are probably in metropolitan areas.

2.3.1.3 Substitutes for Polyvinyl Chloride

According to one estimate, substitutes for polyvinyl chloride exist for approximately 85 percent (by weight) of present polyvinyl chloride uses.[8] It is believed that prices of substitutes would generally be higher than polyvinyl chloride prices and would result in higher consumer prices for finished goods. Industry representatives have indicated that, although known substitutes exist for most polyvinyl chloride uses, they do not feel that substitutes exist in sufficient quantities to fill immediately the void which would be created by banning vinyl chloride and polyvinyl chloride production. In effect, they say that there would not be sufficient substitutes for polyvinyl chloride products for approximately two years.[7]

Even if substitutes for polyvinyl chloride were readily available, they would not necessarily have some of the desirable characteristics of polyvinyl chloride. For example, one of the desirable properties of polyvinyl chloride fabricated products is nonflammability; most of the proposed substitutes do not have this property and would require

additional processing to achieve it. Furthermore, the potentially adverse health and environmental impacts from substitutes have not been thoroughly studied, and, therefore, it is not known whether they would pose an even greater environmental hazard than vinyl chloride.

As an alternative to substitution, there exists the possibility of importing polyvinyl chloride resins for final fabrication by U. S. industry. Although the U. S. has imported very little polyvinyl chloride in the past [18 million kilograms (4 million pounds) in 1972], imports in 1973 increased significantly to 28.8 million kilograms (64 million pounds).[6] Excess foreign polyvinyl chloride capacity remained. At the end of 1973, excess polyvinyl chloride resin capacity outside the United States was about 1237.5 million kilograms per year. But there is no assurance that raw materials would be available so that foreign producers could operate at 100 percent capacity in the future. Nor would there be any assurance that U. S. polyvinyl chloride resin users would receive the additional supplies.

2.3.1.4 Conclusions

Complete prohibition of all vinyl chloride emissions would require closure of vinyl chloride and polyvinyl chloride production because there is no technology to achieve a zero emission limitation and development of such technology is not foreseen. Banning production of vinyl chloride and polyvinyl chloride would have a negative impact on the producing companies, especially on the three or four companies which according to EPA's evaluation are highly dependent on sales of

vinyl chloride and polyvinyl chloride and might therefore be expected to fail if vinyl chloride and polyvinyl chloride production were banned. There would be an even greater impact on unemployment at the approximately 8,000 fabrication plants which depend at least partially on polyvinyl chloride as a raw material. This impact would persist unless and until these plants could adapt their equipment to manufacturing substitutes. With regard to the consumer, there are substitutes for about 85 percent by weight of the uses of polyvinyl chloride, but these substitutes would generally not be available for at least two years, would generally be more expensive than polyvinyl chloride products, and would not necessarily have some of the desirable characteristics, such as nonflammability, of polyvinyl chloride. In view of (1) the beneficial uses of vinyl chloride products for which desirable substitutes are not readily available, (2) the potential adverse health and environmental impacts from substitutes which have not been thoroughly studied, (3) the number of employees (particularly in fabrication industries) who would become at least temporarily unemployed, and (4) the availability of control technology which is capable of substantially reducing emissions of vinyl chloride into the atmosphere, EPA concluded that setting zero emission limits would be neither desirable nor necessary.

2.3.2 The Alternative of Best Available Control Technology

An alternative interpretation of section 112 is that it authorizes setting emission standards that require emission reduction to the lowest level achievable by use of the best available control technology in cases involving apparent non-threshold pollutants, where complete

emission prohibition would result in widespread industry closure and EPA has determined that the cost of such closure would be grossly disproportionate to the benefits of removing the risk that would remain after imposition of the best available control technology. EPA recognizes that consideration of technology in standard setting is not explicitly provided for under section 112. Congress never discussed the particular problem associated with apparent non-threshold pollutants. The Administrator, however, believes that Congress did not intend to impose the costs associated with complete emission prohibition in every case involving such a pollutant. The best available control technology approach will produce the most stringent regulation of hazardous air pollutants short of requiring a complete prohibition in all cases. This interpretation of section 112 has been adopted for vinyl chloride. This approach was used in the case of asbestos, but has never been judicially tested. The purpose of the proposed standard is thus to minimize risk to public health by establishing an emission standard which will reduce emissions to the level attainable with best available control systems. An emission standard based on best available control technology will result in different total emission levels and different ambient air concentrations at different plants due to variations in plant sizes and configurations. However, it will further the protection of public health by minimizing the health risks to the people living in the vicinity of these plants and to any additional people who are exposed as a result of new construction.

2.4 Selection of Source Categories

There are four source categories of vinyl chloride emissions: ethylene dichloride-vinyl chloride plants, polyvinyl chloride plants, polyvinyl chloride fabricating plants, and miscellaneous sources. In developing the proposed standard, EPA evaluated or is evaluating all four sources.[9]

2.4.1 Ethylene Dichloride-Vinyl Chloride Plants

According to EPA estimates, 17 ethylene dichloride-vinyl chloride plants were responsible for about 11 million kg (24.2 million pounds) of vinyl chloride emissions in 1974. This constituted 11 percent of total emissions from all sources. (See Table 2-1.) These plants are second to polyvinyl chloride plants as being the largest source category of emissions.

2.4.2 Polyvinyl Chloride Plants

There are about 41 existing polyvinyl chloride plants which are responsible for approximately 85 percent of the total nationwide emissions of vinyl chloride. In 1974, these emissions were 85 million kg (187 million pounds). (See Table 2-1.) Information on the source categories of vinyl chloride covered by the proposed standard, including polyvinyl chloride plants, is presented in more detail in the remainder of this document.

2.4.3 Polyvinyl Chloride Fabricating Plants

There are about 8,000 polyvinyl chloride fabricating plants emitting (in 1974) approximately 0.6 million kg/yr (1.3 million lb/yr) of vinyl chloride. (See Table 2-1.) A monitoring program conducted by EPA at five fabricating plants indicated that ambient concentrations

Table 2-1

Estimated Vinyl Chloride Emissions in the U. S.-1974

Source	Number of Plants	Estimated Vinyl Chloride Emissions - 1974 (1,000 Kg/yr)	Percent of Total Estimated Emissions 1974
Ethylene Dichloride-Vinyl Chloride Plants	17	11,000	11
Polyvinyl Chloride Plants	41	85,000	85
Polyvinyl Chloride Fabricating Plants	∿8,000	600	1
Miscellaneous Sources	8	∿3,000	3
Total		99,600	100

around the perimeter of these plants are almost negligible. At three of the plants, no vinyl chloride was detected, and, where it was found, the highest concentration was 6 parts per billion (ppb).

According to an Arthur D. Little report,[10] the major emphasis in 1974 on limiting vinyl chloride emissions at fabricating plants was concentrated on reduction of vinyl chloride monomer content in plant air in order to minimize risk to plant workers. Manufacturers believed that the most practical way to limit emissions both inside and outside the plant was to reduce the monomer content in the incoming resin. As far as can be determined, all vinyl chloride emissions from the fabricating plants are due to residual vinyl chloride in the raw materials coming from the polyvinyl chloride plants. Consequently, vinyl chloride emissions from fabricating plants will be minimized indirectly as polyvinyl chloride plants, in response to the proposed standard, reduce vinyl chloride in these raw materials from as high as 1000 ppm to less than 10 ppm. For the foregoing reasons, EPA has concluded that no standard for fabricating plants is necessary at the present time.

2.4.4 Miscellaneous Sources of Vinyl Chloride

For purposes of EPA action, sources of vinyl chloride emissions, other than ethylene dichloride-vinyl chloride plants, polyvinyl chloride plants, and polyvinyl chloride fabricating plants, are classified as miscellaneous sources. Of a number of miscellaneous sources of vinyl chloride emissions, two major categories have been identified. The first category includes those plants that use vinyl chloride as a chemical intermediate for the production of 1,1,1-Trichloroethane (1,1,1-TCE) and 1,1,2-Trichloroethane (1,1,2-TCE)

and for the production of other special chemicals, e.g. certain pesticides, including endrin. The percent of total emissions of vinyl chloride attributable to those plants is not known. Some emission controls have been reported by 1,1,1-TCE and 1,1,2-TCE production plants integrated with ethylene dichloride-vinyl chloride plants. The extent and effectiveness of these controls, however, is unknown at the present time. Of the two plants manufacturing special chemicals, one already vents gases to a thermal oxidizer; information on the emission controls of the other is not yet available.

The second category of miscellaneous sources includes those plants that produce vinyl chloride as a by-product. Known to be in this category are three plants manufacturing ethylene amines from ethylene dichloride and one plant manufacturing ethylene imine from ethylene dichloride. An ADL study,[11] however, notes the possibility that some industrial processes involving by-product vinyl chloride emissions have not been identified. Total emissions from the sources in this category are not known.

Information on the use of emission controls was unavailable for two of the plants. Of the other two, one reported the burning of vinyl chloride in a flare tower as well as the current construction of an incineration facility with a scrubber. The remaining plant reported current construction for incineration as an interim control and plans for a solvent adsorption system as the permanent control. The reduction in vinyl chloride emissions that will be achieved by these controls is unknown.

According to the EPA data, miscellaneous sources of vinyl chloride emissions accounted for about 3 percent of the total estimated 1974 emissions from all sources. (See Table 2-1.) EPA is continuing its research on vinyl chloride emissions from miscellaneous sources. Although the proposed standard does not include these sources, there is a possibility that EPA will conclude that regulations for them should be proposed at a later date.

2.5 Conclusions

Based on the findings of health studies (section 2.2.1.1), EPA has concluded that vinyl chloride, a carcinogen, is a hazardous pollutant and that, as such, it must be regulated now. A careful study of regulatory options (section 2.2) indicated that section 112 of the Clean Air Act--National Emission Standards for Hazardous Air Pollutants (NESHAP)-- is the most effective mechanism for regulating vinyl chloride.

EPA determined that the use of best available control technology is the proper interpretation of section 112 for regulating an apparent non-threshold pollutant, such as vinyl chloride, where complete emission prohibition would result in widespread industry closure and where the Administrator has determined that the cost of such closure would be grossly disproportionate to the benefits to be achieved by completely prohibiting emissions.

Based on data available on emission levels, process equipment, control technology, and costs of control technology, EPA concluded that the proposed standard should cover ethylene dichloride-vinyl chloride and polyvinyl chloride plants. As noted above, future action by EPA to control vinyl chloride emissions from miscellaneous sources may be found necessary.

The proposed standard for polyvinyl chloride plants covers any plant where vinyl chloride alone or in combination with other materials is polymerized into polyvinyl chloride. Thus, the proposed standard includes plants which produce homopolymers in which vinyl chloride is the only polymerized constituent and/or copolymers, terpolymers, or any other polymers in which other raw materials in addition to vinyl chloride are polymerized. EPA considered exempting from the proposed standard plants (six of the approximately 41 existing plants) which produce a polymer in which vinyl chloride is less than 50 percent of the raw material polymerized. EPA decided not to exempt these plants from the proposed standard because the total vinyl chloride emissions from a plant are more a function of the total quantity of vinyl chloride processed in the plant than the percent vinyl chloride contained in the resin. Furthermore, available data indicate that the processing equipment in these six plants is the same as in the plants producing resins with higher percentages of vinyl chloride, so that the same control technology can be applied and separate standards are not required.

Ethylene dichloride and vinyl chloride are typically produced at one plant. However, the proposed standard covers plants that produce one and not the other as well as plants that produce both. The definition of ethylene dichloride plants contained in the proposed standard limits the applicability of the proposed standard to the production of ethylene dichloride by oxychlorination of ethylene. Available data indicate that there are no vinyl chloride emissions from direct chlorination of ethylene.

References

1. Preliminary Assessment of the Environmental Problems Associated with Vinyl Chloride and Polyvinyl Chloride, Report on the Activities and Findings of the Vinyl Chloride Task Force, compiled by the Office of Toxic Substances, Environmental Protection Agency, Washington, D. C., September 1974.

2. Scientific and Technical Assessment Report on Vinyl Chloride and Polyvinyl Chloride, compiled by Office of Research and Development, Environmental Protection Agency, Washington, D. C., June 1975.

3. Preliminary Assessment of the Environmental Problems Associated with Vinyl Chloride and Polyvinyl Chloride, ibid., p. 2.

4. Population Residing Near Plants Producing Vinyl Chloride, Prepared by the Environmental Health Hazards Project--American Public Health Association for the Office of Toxic Substances--U. S. Environmental Protection Agency, Washington, D. C., August 1975.

5. Evaluation of Environmental Carcinogens. Report by Ad Hoc Committee on the Evaluation of Low Levels of Environmental Chemical Carcinogens to the Surgeon General, USPHS, HEW, Washington, D. C., April 22, 1974, pp. 1,8.

6. "Polyvinyl Chloride Resins," Chemical Economics Handbook, Stanford Research Institute, September 1973.

7. Cited from "Economic Impact of a Shutdown of the Polyvinyl Chloride Industry," a study done for the Society of the Plastics Industry, Inc. by Arthur D. Little, Inc., May 1974.

8. Calculated from Modern Plastics, January 1974.

9. Two studies by Arthur D. Little, Inc. (see footnotes 10 and 11) are currently being conducted for the U. S. Environmental Protection Agency.

10. Vinyl Chloride Monomer Emissions from the Polyvinyl Chloride Processing Industries, Draft Report to U. S. Environmental Protection Agency by Arthur D. Little, Inc., May 1975.

11. Industrial Sources, Process, and Quantities of Vinyl Chloride Emissions in the U. S. Other Than Those Connected With The Manufacture of Vinyl Chloride or Polyvinyl Chloride, Draft Final Report to U. S. Environmental Protection Agency by Arthur D. Little, Inc., July 1975.

3. THE ETHYLENE DICHLORIDE-VINYL CHLORIDE AND POLYVINYL CHLORIDE INDUSTRIES

3.1 GENERAL

This chapter will discuss the production of vinyl chloride monomer and the associated industries, ethylene dichloride and polyvinyl chloride production. Ethylene dichloride is an important segment of the vinyl chloride monomer industry in that, in 1974, 92 percent of vinyl chloride monomer production capacity was based on the pyrolysis of ethylene dichloride. The other 8 percent was based on the addition of hydrogen chloride to acetylene. The 1974 production amounted to 2.6 billion kilograms of vinyl chloride.

In 1975 polyvinyl chloride resins were produced by 23 companies at 41 plants by one or more of four processes--suspension, emulsion, bulk, and solution.

Tables 3-1, 3-2, and 3-3 list the producing companies and indicate the locations and the capacities of the three industries discussed. Associated maps 3-1, 3-2, and 3-3 show the location of each of the plants. Table 3-4 shows the producers of each type of polyvinyl chloride resin.

The near term (i.e. next 2 to 3 years) outlook for the vinyl chloride and polyvinyl chloride industry is uncertain. There has been a dramatic turnaround in the vital statistics of the total thermoplastic/thermoset sector of the plastics industry of which polyvinyl chloride is a part. In 1973 resin sales increased 12 percent over the 1972 level; production was up 10 percent.[14] Future demand and capacity assumptions at that time yielded forecasts of improved operating rates and higher profits. However,

at the end of 1974, Society of Plastics Industry data revealed total resin production up 4 percent but sales were up only 1.7 percent. Such data are not consistent with projections of improved operating rates and higher profits. It is difficult to make an assessment of the near term vinyl chloride outlook with data specific to a much broader industry class.

Chapter 7, Economic Impact, contains an in-depth look at the industry structure and projects the impact of various market influences on the industry.

3.2 DESCRIPTION OF THE PROCESS

The purpose of this section is to provide a process description and to identify each source of emission in different types of polyvinyl chloride, vinyl chloride, and ethylene dichloride plants. The emission sources are described in terms of stream volumes and composition. In addition, a discussion of the cause of emission is presented.

3.2.1 Ethylene Dichloride-Vinyl Chloride Production

Vinyl chloride is produced in the United States by two methods, which are distinguished by the starting materials. The first, accounting for 8 percent of the total vinyl chloride capacity is the acetylene-hydrogen chloride method. The second method, accounting for 92 percent of the total, is the ethylene dichloride (dichloroethane) process. For a discussion of the chemical and physical properties of vinyl chloride, see Scientific and Technical Assessment Report of Vinyl Chloride and Polyvinyl Chloride, a document prepared by EPA's Office of Research and Development.

3.2.1.1 Acetylene-Hydrogen Chloride Process -

Only two plants in the United States use this method of producing vinyl chloride which consists of the addition of hydrogen chloride to acetylene in a reactor. The acetylene path to vinyl chloride can be described as follows:

$$CH \equiv CH + HCl \rightarrow CH_2 = CHCl$$

The reaction is catalyzed in a large reactor by mercuric chloride on an activated carbon base at 85-141°C (185-285°F). Figure 3-1 shows a simplified flow diagram for the acetylene process. Vinyl chloride is produced in the reactor and purified in subsequent columns.[6] The purification is accomplished by scrubbing with water or solvent to remove unreacted hydrogen chloride and acetylene. The vinyl chloride is transferred to storage and the material scrubbed from the process is incinerated or otherwise treated. As of August 1, 1975, neither of these plants were operating.

Figure 3-1

ACETYLENE PROCESS
FOR
VINYL CHLORIDE PRODUCTION [6/]

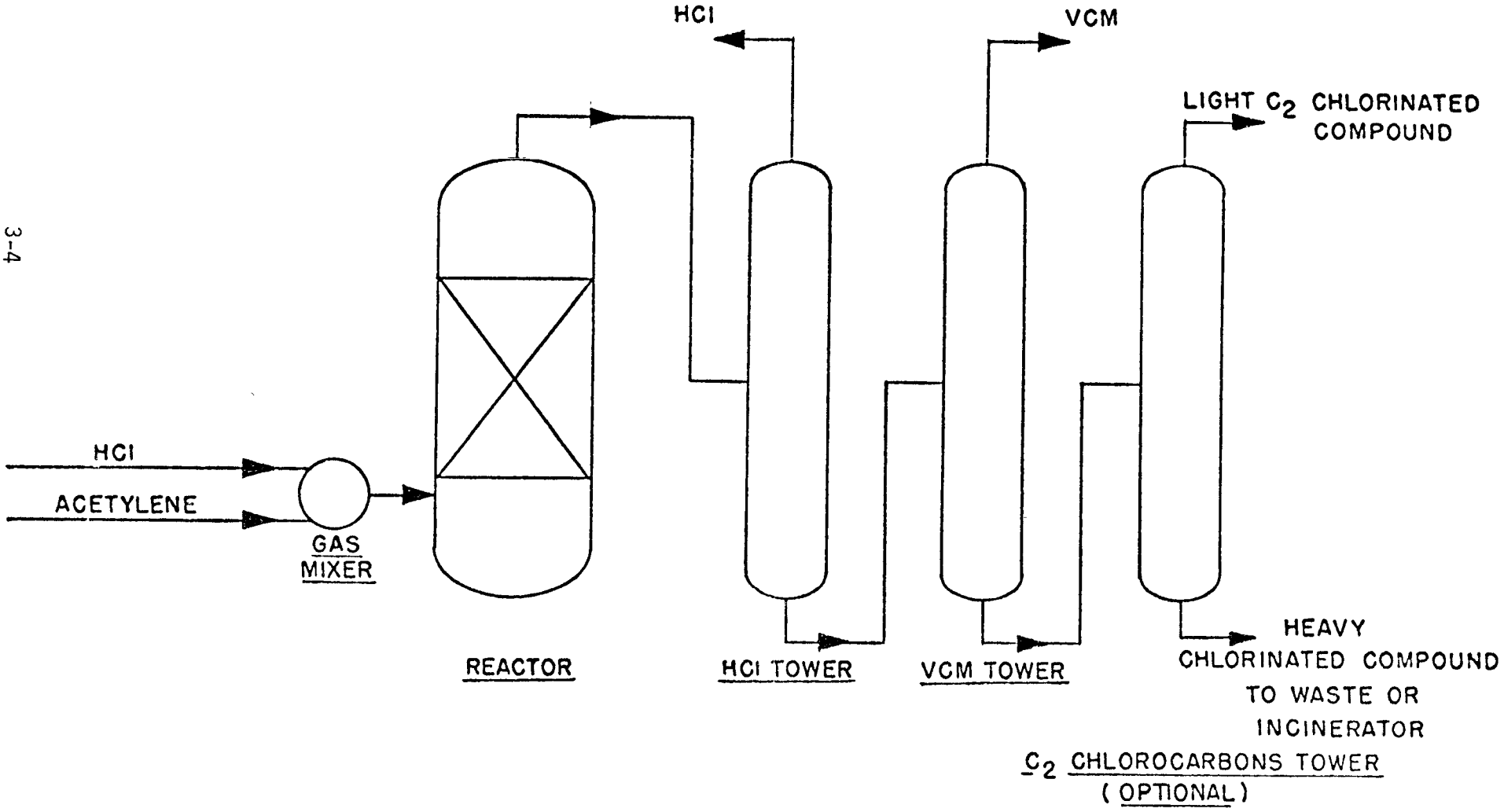

3.2.1.2 Ethylene Dichloride Process -

The principal process currently used to produce vinyl chloride is dehydrochlorination (removal of hydrogen chloride) of dry ethylene dichloride. The ethylene dichloride path can be described as follows:

$$CH_2ClCH_2Cl \rightarrow CH_2 = CHCl + HCl$$

Typically, vinyl chloride producers will return the hydrogen chloride by-product of this process back to a system which makes more ethylene dichloride. This process is called the oxychlorination process and with vinyl chloride production via ethylene dichloride "cracking", the two are known as the balanced process (see figures 3-2 and 3-4). All plants differ in their exact configurations but the process can be described generally as follows:

Ethylene is directly chlorinated with chlorine in a catalytic reactor to produce ethylene dichloride. The material is transferred to a finishing column after being cooled by water and brine condensers. Noncondensable gases are separated in the finishing column and vented to the atmosphere after being scrubbed with water or aromatic solvent to recover ethylene dichloride and remove hydrogen chloride.

The organic liquid product from the reactor is purified in a finishing column to produce pure ethylene dichloride. Impurities, including other chlorinated hydrocarbons, are sent to disposal.[7]

No emissions of vinyl chloride have been reported from the direct chlorination process.

The ethylene dichloride is transferred to a cracking furnace operating at approximately 510°C (950°F), where vinyl chloride is produced. The furnace is packed with a catalyst such as pumice, or charcoal. The yield to vinyl

Figure 3-2

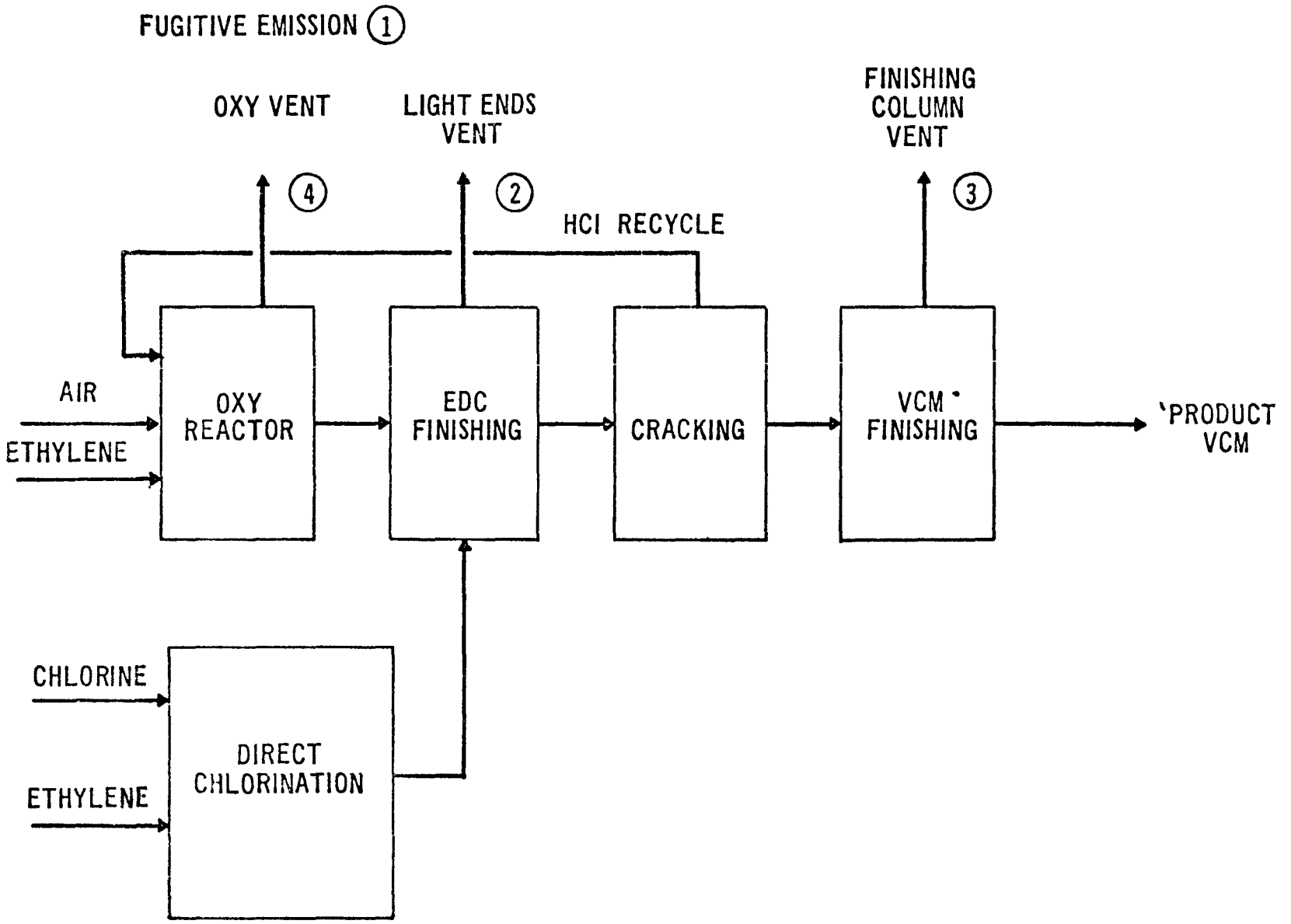

VINYL CHLORIDE BY THE BALANCED PROCESS

Figure 3-3

DICHLOROETHANE CRACKING PROCESS
FOR
VINYL CHLORIDE PRODUCTION[6/]

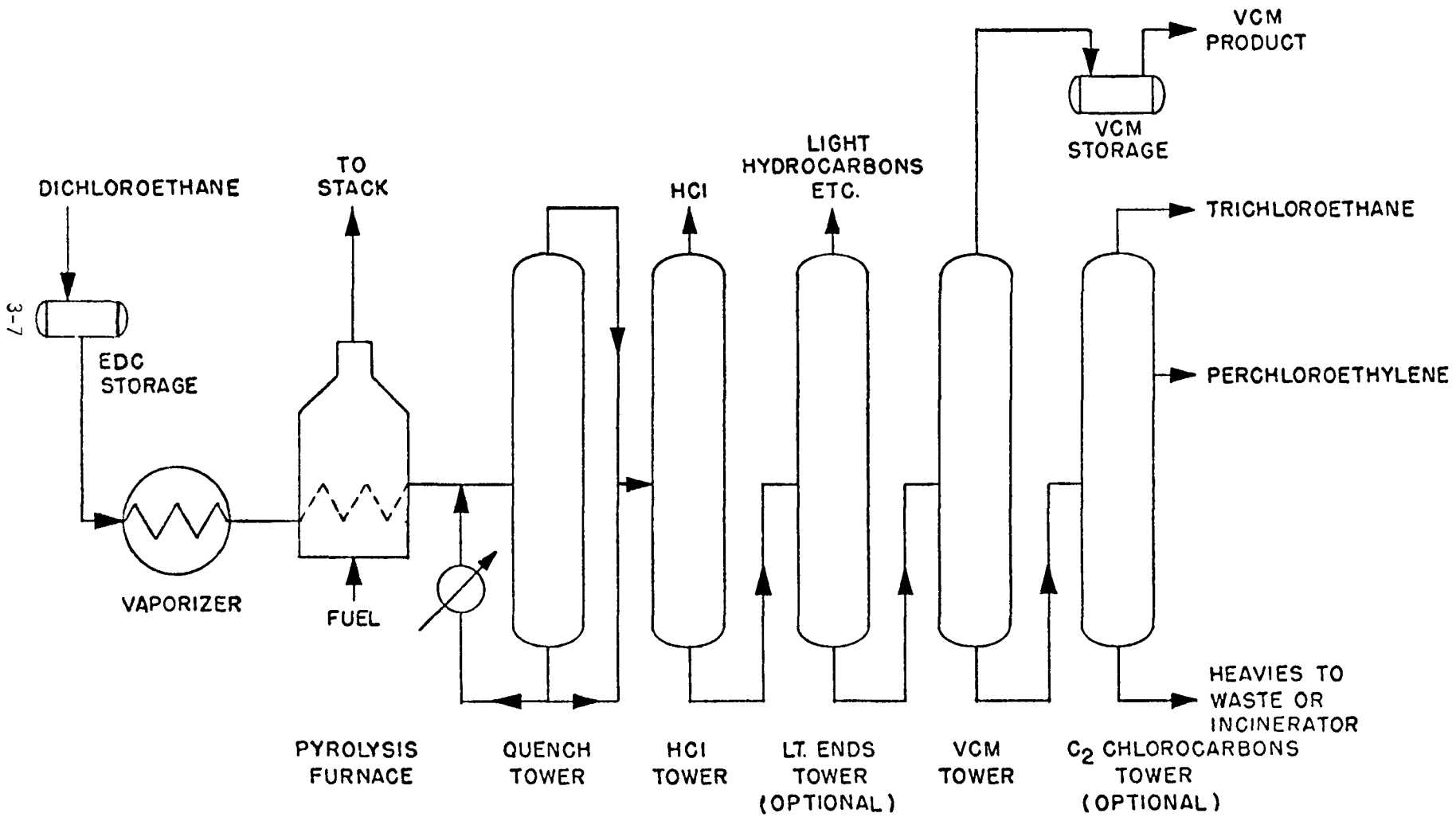

Figure 3-4. The Oxychlorination Process[7]

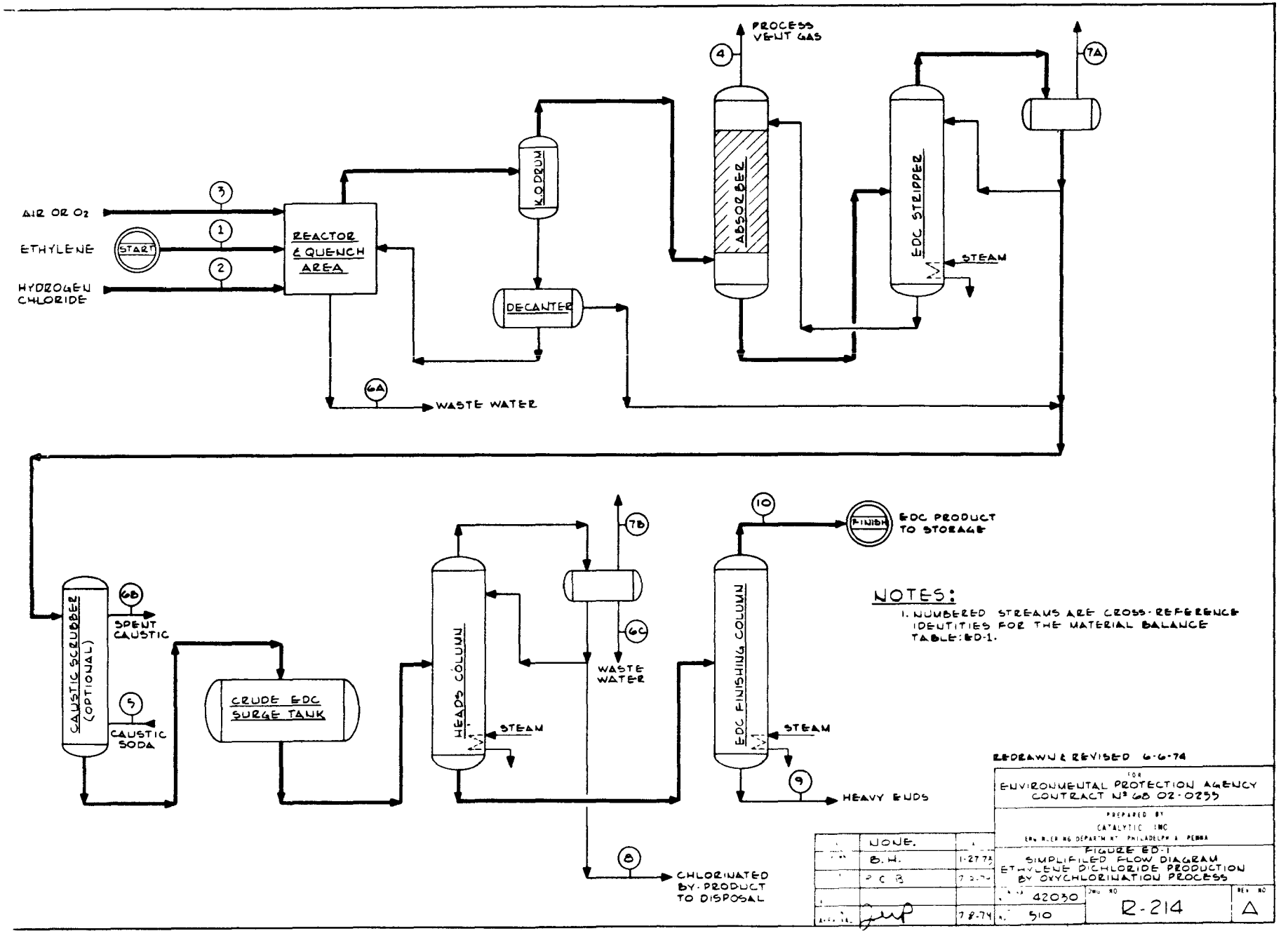

chloride is 94 to 97 percent. The hot effluent gases are quenched and partially condensed by direct contact with cold ethylene dichloride in a quench tower (see figure 3-3).

The separation of hydrogen chloride and product purification are generally accomplished in additional operations described below. Each producer has minor modifications in this process, but typically the following would be included. Hydrogen chloride is recovered and recycled to an oxychlorination plant which chlorinates ethylene with the chlorine in the hydrogen chloride. Because of the entrainment of some vinyl chloride in the hydrogen chloride recycle process, and the generation of vinyl chloride in the process, some vinyl chloride emissions occur from the oxychlorination reactor.

The ethylene dichloride produced from the oxychlorination process is transferred to finishing columns for purification as described above in the direct chlorination step. As there is still some vinyl chloride in the system, some emissions of vinyl chloride occur from the ethylene dichloride finishing columns. The purified ethylene dichloride is used to produce more vinyl chloride in the cracking plant.

Vinyl chloride is purified in finishing columns which vent some vinyl chloride. The product is transferred to a product storage facility (usually large spheres) before shipment by pipeline or tank car.

The ethylene dichloride and vinyl chloride finishing column vents are sometimes referred to in this document as the purification processes. Typically, the total vinyl chloride emissions from these vents are 0.29 kg/100 kg (lb VCM/100 lb VCM) produced. The oxychlorination vent has reported vinyl chloride emissions of 0.0364 kg/100 kg (lb VCM/100 lb VCM) produced.[8]

Ethylene dichloride - vinyl chloride plants also have fugitive emissions which include pump and valve emissions, transfer losses, inprocess wastewater losses, loading operation losses, and sample flask losses.

There are special problems involved with using a material balance to determine the fugitive loss of vinyl chloride from a vinyl chloride plant. The percentage fugitive loss from a vinyl chloride plant is smaller than the percentage fugitive loss from a polyvinyl chloride plant. For this reason it is necessary to measure all streams more carefully to determine the exact amount of fugitive emission. However, there are several gas streams into and out of these plants which are not measured as accurately as the liquid and solid streams into and out of a polyvinyl chloride plant. These streams include the gaseous chlorine and ethylene feedstocks. For this reason material balance values for fugitive emissions from vinyl chloride plants are less accurate than material balances values for fugitive emissions from polyvinyl chloride plants.

The total fugitive emissions reported in table 3-10 were estimated by individual vinyl chloride operating companies in June of 1974.[9] These estimates are based on material balance or emission values (found in the literature) for various sources.

3.2.2 Polyvinyl Chloride Production

Polyvinyl chloride is produced by four types of processes in the United States. Three of these are batch processes: suspension polymerization, which accounts for 78 percent of 1973 plant capacity; dispersion or emulsion polymerization accounting for 13 percent; and bulk (mass) polymerization which accounts for 6 percent. The solution or solvent polymerization process is a continuous process used by one company and accounts for 3 percent of United States polyvinyl chloride capacity.

3.2.2.1 Suspension Polymerization -

Figure 3-5 presents a simplified flow diagram for the suspension process. This is by far the most common process used to manufacture polyvinyl chloride resins (78 percent of the total U. S. capacity). The process involves the mixing of a weighed amount of vinyl chloride in a metered amount of water, catalyst and suspending agents. The ingredients are mixed in a clean, glass or stainless steel lined, reactor. A steam jet or vacuum pump is used to remove some of the air filling the reactor. The amount of air left depends on the absolute pressure after evacuation. The reactor is jacketed to provide steam heat or water cooling as necessary to control the reaction which takes place. The catalyst initiates the reaction and the suspending agent is used to keep vinyl chloride droplets small and dispersed. Agitation is supplied to the "slurry" being formed in the reactor by an agitator located in the bottom of the vessel. The polymerization reaction continues in the slurry droplets to 85 to 90 percent completion which requires approximately six hours. The 10 to 15 percent unreacted vinyl chloride is present in the vapor space of the reactor, is dissolved in the water, or is dissolved (or trapped in) the polyvinyl granule itself. The reactors are generally 11,340 to 22,680 liters (3000 to 6000 gallon) kettles and the typical plant may have from 12 to 18 reactors. Reactors built within the last three years in new plants are generally much larger (56,660 to 103,200 liters or 15,000 to 35,000 gallons) and fewer in number (4 to 8) than the older existing reactors.

Some of the unreacted vinyl chloride in the reactor is removed from the batch by vacuum and transferred to a monomer recovery system consisting of compressors and condensers. The vinyl chloride is recovered to a holding tank for recycling. Noncondensable gases (such as the reactor air described above) accumulate in the recovery system and must be vented. The venting

Figure 3-5

POLYVINYL CHLORIDE PLANT

SUSPENSION PROCESS[4]

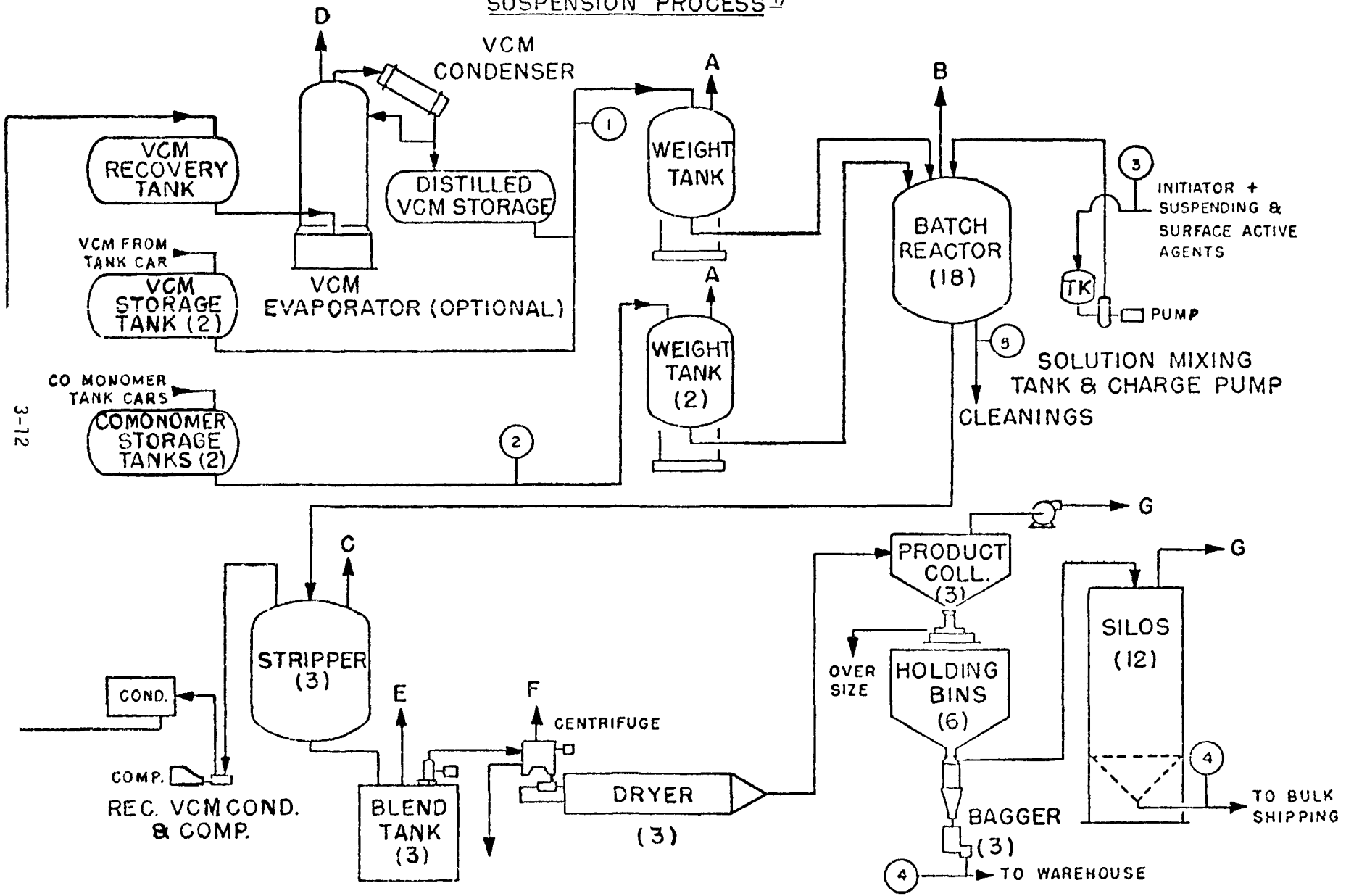

may be manual or automatic and periodic or continuous depending on the system design and pressure. With the venting of these gases, some vinyl chloride is released. This is referred to as Source Area D in figure 3-5 (Suspension Flow Diagram) and in table 3-6 (Summary of Emissions).

Each reactor is equipped with a "manhole", which is a hatch allowing entry into the vessel. The entry is necessary to clean the scale that is left on the walls of the reactors after the slurry batch has been transferred (usually pumped to another holding tank). The scale must be removed to insure the quality of the resin subsequently produced will be maintained. The removal is done by high pressure water spray, by personnel who enter the vessel and chip the scale away, or by a combination of these two methods.

When the hatch is opened the monomer which has not been removed by the vacuum recovery system and which is still in the gas phase is released by purging the reactor with steam or air. This is referred to as the "Reactor Opening Loss" and is Source Area B in table 3-6 and figure 3-5.
The cleaning of the reactors typically takes place every two to six batches (one to three days) for about three hours. The completion of this cleaning and the closing of the reactor marks the completion of the reactor cycle.

The polymerization of vinyl chloride usually takes place at a pressure of about 5.1 to 6.8 atmospheres and the polyvinyl chloride reactors are protected from overpressure and catastrophic rupture by safety valves or a combination of rupture discs and safety valves. Because of equipment failure, power failure, or operator error, run-away reactions occasionally occur in the reactors. These excursions are generally stopped by releasing the pressure and venting to stacks by either automatic pressure relief valves or manual venting. The reason for the venting is to protect the vessel from overpressure. This vent contains a large amount and a high

concentration of vinyl chloride (typically 2270 kg or 5000 pounds) but only lasts 5 to 15 minutes. Thirty-six plants report emission factors of 0.04-0.40 kg/100kg (lb/100 lbs) of PVC produced from this source.[1] Source Area B in figure 3-5 and table 3-6 describes this emission.

From the reactor, the batch can be transferred into a second vessel for further processing. In several plants, the slurry leaving the reactor is pumped to a stripper. A stripper is a kettle similar to the reactor in which vinyl chloride is "stripped" from the slurry by applying heat and/or vacuum to the reactor contents for a period of time. Some plants perform this step in the reactor, but most producers do not wish to "tie up" the reactors with the time consuming process (1-4 hours) since it can reduce the production rate. Heat is applied by steam jacketing or by direct introduction of steam into the slurry. The vent gases from the stripper are transferred to the monomer recovery system as described above.

In some plants, the stripper is opened to the atmosphere following the vacuum step of stripping in order to vent the vessel and transfer the batch to a tank where the various batches can be blended (the slurry blend tank). This results in some vinyl chloride emissions. In other plants the vinyl chloride which was stripped from the polymer is released to the atmosphere. Seventeen plants reported vinyl chloride emissions associated with the stripping operation varied between zero and 0.5 kg/100 kg (lbs/100 lbs) of PVC produced.[2] Source Area C describes this emission point on figure 3-5 and table 3-6.

When stripping is complete, the batch is transferred to the slurry blend tanks where various batches are blended together to form a more uniform product. These large tanks (which typically hold three to four batches) are generally open to the atmosphere. As the slurry is mixed, residual monomer in the slurry is released. This emission (Source Area E) varies widely from

plant to plant depending on the effectiveness of stripping. Thirty plants reported losses of between 0.01 and 0.7 kg/100 kg (lbs/100 lbs) of PVC produced (see table 3-6 and figure 3-5.)[3]

From the blend tank the slurry is usually pumped to a centrifuge where as much water as possible is removed (source Area F). Emissions of vinyl chloride can take place from the centrifuge casing. The water is generally transferred to a treatment area before being disposed of or recycled (see section 4-10 of chapter 4). Vinyl chloride emissions occur from this water and water from other sources within the plant, e.g., reactor cleaning, floor cleaning, etc. It is reported that the concentration of vinyl chloride monomer from typical suspension polyvinyl chloride plant water streams before treatment ranges from less than 1 ppm to nearly 2000 ppm.[11] The wet polyvinyl chloride cake from the centrifuge is dropped to a hot air dryer, usually a rotary dryer, where the remaining water is removed. In the dryer most of the vinyl chloride remaining in the resin is released. This vinyl chloride is exhausted from the dryer baghouses or cyclones and is represented by Source Area G in table 3-5 and figure 3-5. The dried, solid, polyvinyl chloride particles (resin) are collected by bag collectors or cyclones. From this point the resin is transferred to storage or bagging areas (Source Area G). The residual vinyl chloride monomer in the resin is released in all sources downstream of the stripping operation. These sources are the slurry blend tanks, centrifuges, dryers, and the bulk polyvinyl chloride resin storage areas. The sum of the emissions from all these sources is due entirely to the vinyl chloride content of the polyvinyl chloride resin leaving the strippers.

The dryers, storage bins and silos, bulkloading operations, bagging machines and resin transfer operations are all potential sources of particulate polyvinyl chloride emissions. When the product resin is transferred by air to any of the

above areas, its separation from the carrier air stream creates a source of particulate emissions.

Finally, there are emissions which are unaccounted for in all other source estimates. These losses are called fugitive emissions and are the most difficult to quantify. Fugitive emissions as discussed here include emissions from (1) the loading, unloading, sampling and storage of vinyl chloride, (Source Area A) (2) pumps, compressor, and agitator seals, (3) pipe and equipment flanges and manhole cover seals, (4) the opening of equipment for inspection and maintenance, (5) leaking pressure relief valves, (6) sampling for laboratory analysis, (7) vinyl chloride dissolved in process water exposed to the atmosphere, and (8) manual venting of equipment. The data presently available do not permit an estimate to be made of the magnitude of the vinyl chloride emission attributable to most of these categories individually. Emissions from source area 4 are estimated and presented in Tables 4-8 and 4-9 . Emissions from source area 7 are detailed in table 3-11. The fugitive emission factor reported in table 3-11 was determined by averaging individual operating company data from June of 1974.[4] The specific emission factors given in tables 4-8 and 4-9 were derived from data given to EPA in telephone conversations.[12,13] Table 3-11 was given to EPA in a plant visit.

An instantaneous value for the magnitude of the fugitive emissions at any one time is virtually impossible to determine. Average values over a period of time can most accurately be determined by conducting material balances. In a polyvinyl chloride plant, if the amount of vinyl chloride in the product is deducted from the amount of vinyl chloride fed, the difference will be the total gas and solid loss from the system. Some amount of this total loss can be measured accurately. Waste polyvinyl chloride solid can be collected and weighed and the vinyl chloride in the gas vent streams to the atmosphere and the waste

water streams can be measured. If the known (or accountable) loss is deducted from the total loss, the difference is the fugitive (or unaccountable) loss. While it is possible that appreciable amounts of the losses reported here represent solid losses, solid loss is more easily detected and measured than vinyl chloride loss. Most polyvinyl chloride producers assume that the unaccounted for loss in polyvinyl chloride plants consists primarily of vinyl chloride vapor emitted to the atmosphere.

The use of material balance to determine fugitive losses has several disadvantages. The accuracy of the loss determination depends on the accuracy of the measurements made. If the vinyl chloride raw material and the polyvinyl chloride product are weighed with an accuracy of $\pm$ 1/2 percent then the calculated fugitive loss may be as much as 1 percent high or 1 percent low (the loss would be 1 percent higher than actual if the raw material measurement were 1/2 percent higher than actual and the product measurement were 1/2 percent lower than actual). An accuracy of 1/2 percent is about the best that can be expected using existing measurement techniques. Over a period of time high and low readings tend to balance each other, and the accuracy of loss determination increases as the time period over which the balance is made and as the number of readings increases. It is therefore difficult to make accurate balances over short periods. As an example, if an operational upset in a polyvinyl chloride plant causes an instantaneous emission of two thousand pounds of vinyl chloride it would not be possible to determine the time of the emission or the amount of the emission using this method. There is also an accounting problem associated with using material balances to determine loss. All waste polyvinyl chloride must be collected and weighed accurately and the vinyl chloride and polyvinyl chloride in all vents from the plant must be determined.

The total fugitive emissions reported in table 3-10 were determined by individual polyvinyl chloride operating companies in June of 1974.[5] Because these emissions were determined using different procedures they are not all exactly comparable. In many cases the material balances were based on engineering estimates because the necessary plant data had not been collected. In those plants where the major emission sources had been identified and measured, the reported unaccountable loss would be less than in those plants where these sources had not been measured. Some plants that had not measured the amount of scrap polyvinyl chloride produced estimated the amount.

Not all polyvinyl chloride plants weigh all vinyl chloride cars into and out of the plant. Some plants receive vinyl chloride by pipe line and the amount received is calculated by tank level or integrated flow measurements. Other polyvinyl chloride plants weigh all vinyl chloride received but operate several processes from one vinyl chloride storage area. Although the total amount of vinyl chloride used can be determined accurately the amount used by each process can only be estimated. This limitation is important in plants which produce two types of resin (dispersion and suspension, for instance). The storage area may be common to the two plants and accurate data on the monomer received by each plant is difficult to obtain.

The production of polyvinyl chloride copolymers, which are polymers derived from two monomers such as vinyl chloride and vinyl acetate, differs from polyvinyl chloride homopolymer production in two respects. At least one producer by-passes the recovery system in vinyl acetate-vinyl chloride copolymer production because the vinyl acetate can form acetic acid in the system and cause corrosion problems. Other producers recycle both back to the process. One producer indicates that stripping is more difficult in copolymer production.

3.2.2.2 Dispersion (Emulsion) Polymerization -

A simplified flow diagram for a typical dispersion polymerization plant is presented in figure 3-6. This process is basically very similar to the suspension process in that the batch reactor processes liquid vinyl chloride dispersed in a water system. The difference is that more soap is added to the slurry to stabilize the monomer droplets and form agglomerates. Emulsion resins can be polymerized at lower temperatures and faster than suspension resins. The equipment used to produce emulsion resins is almost identical to suspension resin equipment.

Emulsion resins are more sensitive to heat and shear stresses than suspension resins and the resin particle if subjected to heat and shear may be changed in ways that make it unsuitable for use.

The main equipment difference between the two resins is the type dryer used. Since the particle sizes obtained by dispersion polymerization are much smaller than those obtained by suspension, spray dryers, which ensure the maintenance of the small particle size, are generally used. These dryers have much higher air volumes than the rotary, flash and fluidized bed dryers used for suspension resin production.

Latex resins are produced by the dispersion process. The production of these resins is similar to dispersion resins except that more soap is added to the recipe and the product is sold without drying.

Emissions from the sources within the dispersion plant are outlined in table 3-7 which lists all sources within the plant and characterizes emissions on a kg/100 kg (lb VCM/100 lb) PVC produced basis.

3.2.2.3 Bulk Polymerization -

A bulk process flow sheet is shown in figure 3-7. The process consists of making "seed" polyvinyl chloride from liquid vinyl chloride in a reactor similar to that described in the suspension process. Conversion of vinyl

Figure 3-6

POLYVINYL CHLORIDE PLANT

DISPERSION PROCESS[4/]

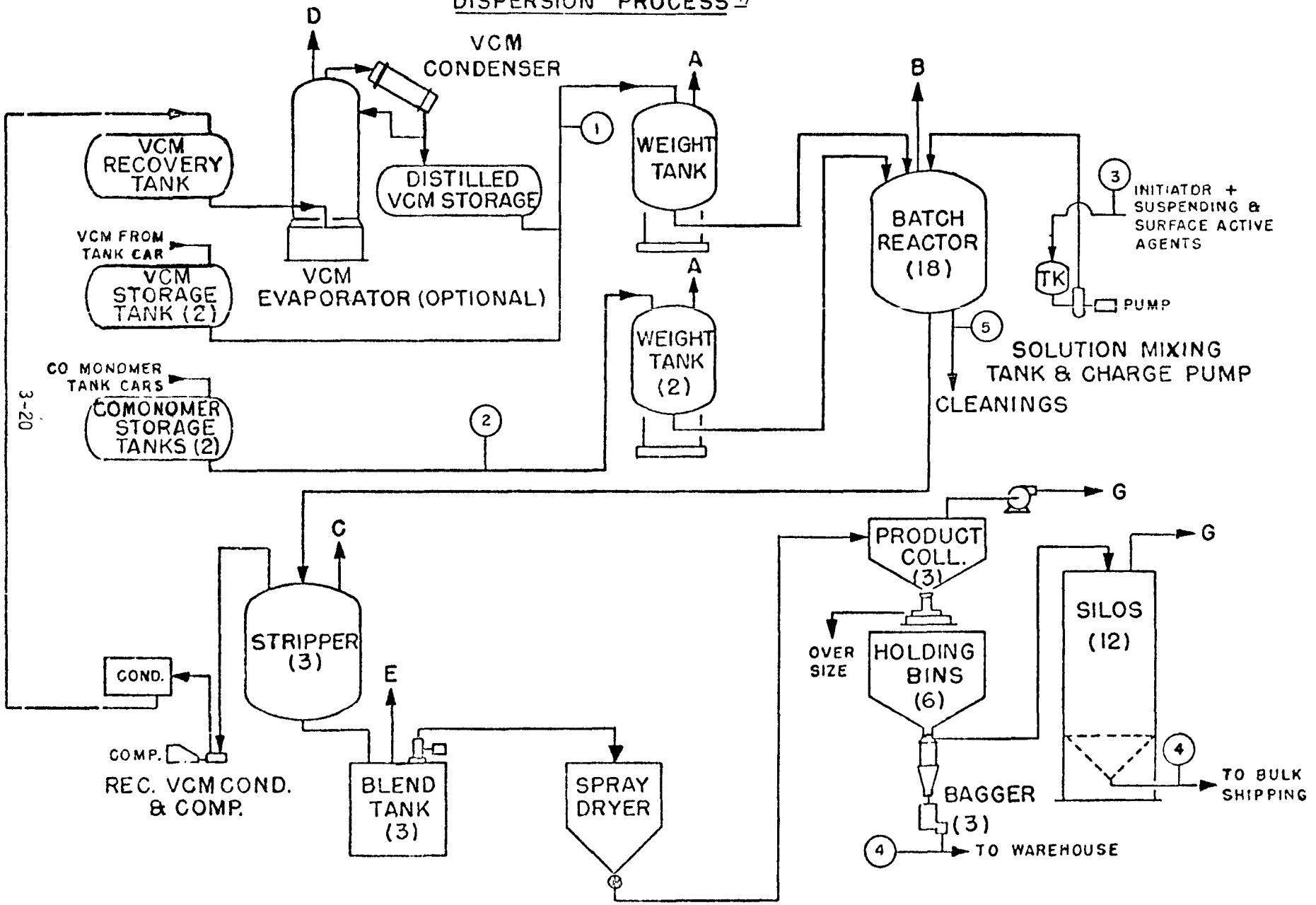

Figure 3-7

FLOW SHEET FOR POLYVINYL CHLORIDE BULK PROCESS[4/]

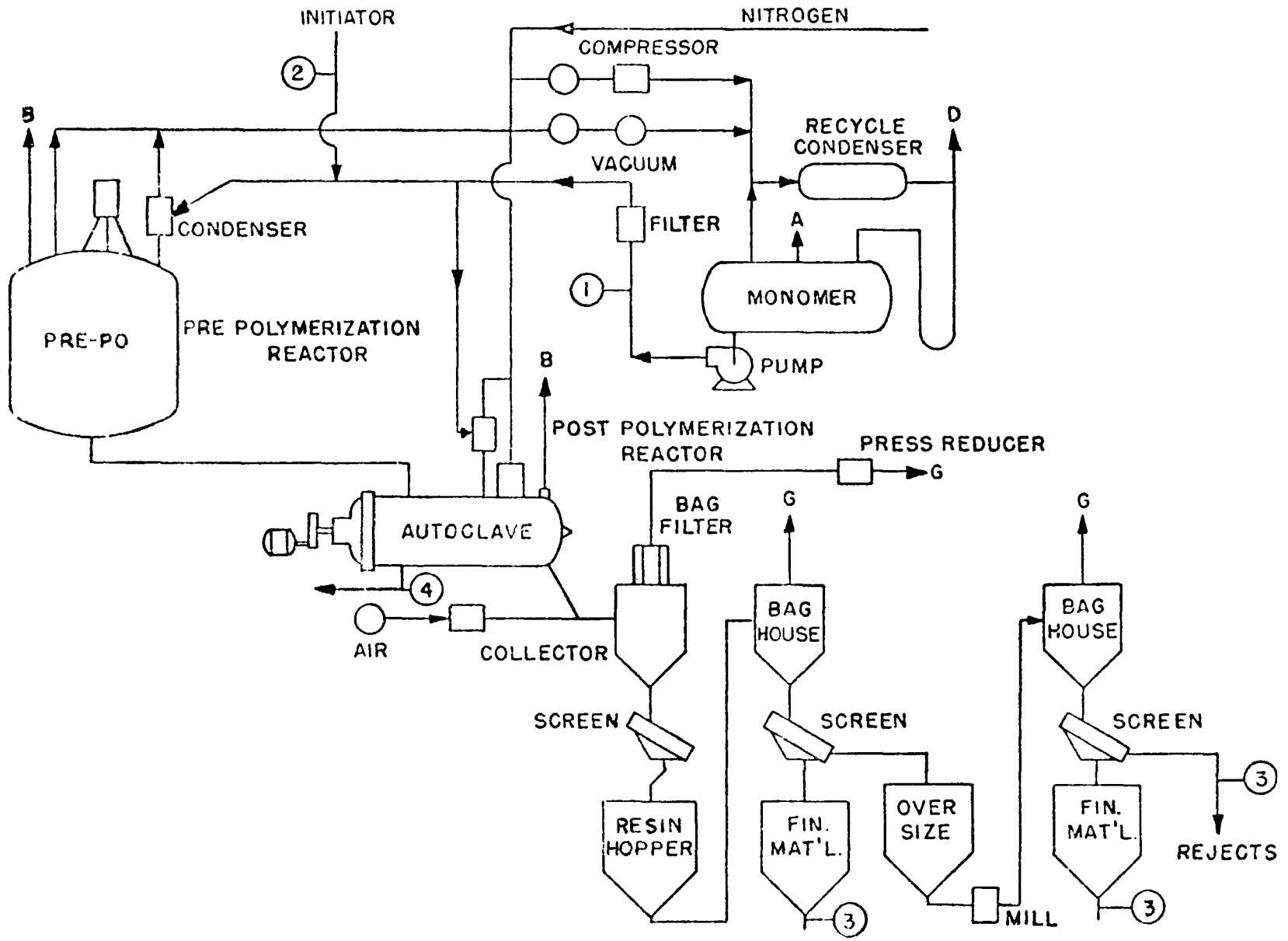

chloride to polyvinyl chloride is only 7 to 12 percent. The suspension of polyvinyl chloride in vinyl chloride liquid is then transferred to a larger reactor, horizontal as opposed to the vertical suspension resin reactors, along with more liquid vinyl chloride and more initiator. The agitator is much more rugged and the agitation is harsher. The polymerization is carried out to 85-90 percent completion with steam/water jacketing controlling the temperature.

As with suspension resins, the remaining monomer is removed by vacuum to be returned to storage via the recovery system. As there is no water or water vapor involved, however, it is possible to use very low temperature condensers in the recovery system (-35°C or -31°F as opposed to 7°C or 44.6°F in suspension and dispersion recovery). The second reactor, called a post polymerization or popo reactor, must be cleaned after every batch. The first reactor, called a prepolymerization or prepo vessel, does not require cleaning as frequently.

Since there is no water in this process, there are no dryer or inprocess wastewater emissions of vinyl chloride. However emissions equivalent to emissions from the dryer in suspension and dispersion processes take place in all operations "downstream" of the popo reactors including pneumatic transfer, screeners, and bulk storage. Emissions are described in table 3-8.

3.2.2.4 Solvent Polymerization -

Only one company manufactures polyvinyl chloride by the solvent process in this country. Most resins produced by this process are copolymers of polyvinyl chloride (75-90 percent) and polyvinyl acetate (10-25 percent). The basic process as shown in figure 3-8 consists of a mixture of the solvent, most generally n-butane, and the comonomers, vinyl chloride and vinyl acetate,

Figure 3-8

POLYVINYL CHLORIDE

SOLVENT PROCESS[4/]

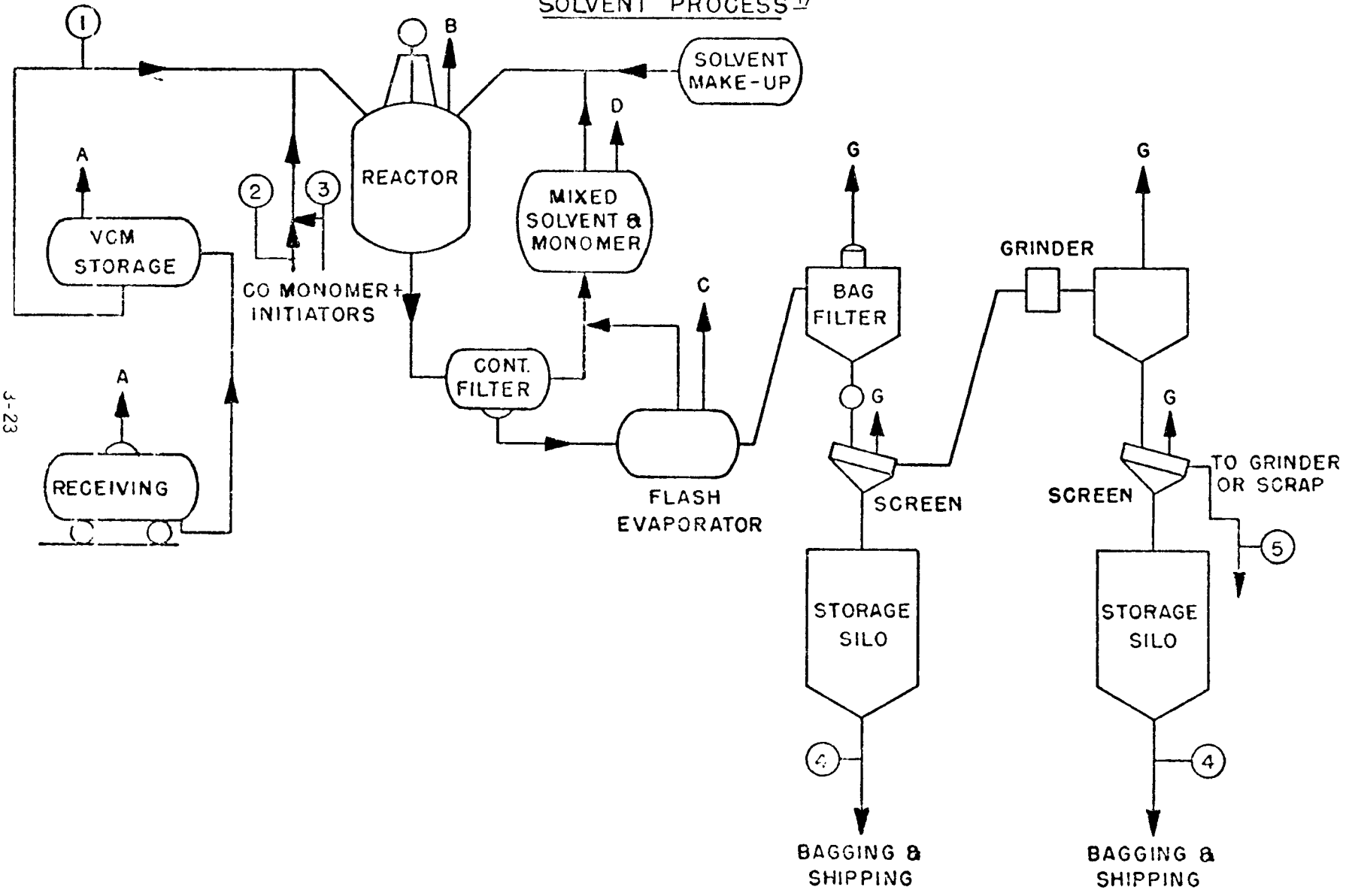

being charged continuously to a reactor along with the appropriate amount of initiator. Slurry is continuously drawn off and the polyvinyl chloride filtered from the slurry. The filter cake is dried by flash evaporation and the recovered monomers and solvent returned to the system. The polyvinyl chloride resin is remarkably pure as no emulsifier or suspending agents are required. The cost is higher than other processes and so is limited to those products that justify a higher cost.

Because the process is continuous, emissions from the reactor area are relatively low. There are indications that the resin is easily stripped of vinyl chloride and thus downstream emissions are kept low also. Emissions are described in table 3-9.

3.2.3 Summary

This section has described the emissions from nine (9) major vinyl chloride sources within polyvinyl chloride plants. The magnitude of the emissions are dependent upon the size and age of the plant and the type of resin which is produced. These nine sources are as follows:

a) Fugitive emissions. The fugitive emissions can be broken down into seven major areas discussed in the text.

b) Reactor opening loss

c) Stripper losses

d) Monomer recovery system

e) Slurry blend tanks

f) Centrifuges

g) Dryers

h) Bagging and bulk resin storage areas

i) Safety relief valve discharges from reactors

Tables 3-6 through 3-9 have summarized the emissions from the four major types of resin processes. These figures were derived by averaging emission factors given by individual polyvinyl chloride producers in response to a May 30, 1974, request for information made by the Office of Air Quality Planning and Standards under authority of Section 114 of the Clean Air Act.

Also, the four major sources within vinyl chloride plants were discussed. These sources are:

a) Fugitive emissions

b) Ethylene dichloride purification

c) Vinyl chloride purification

d) Oxychlorination vents

The emissions from these sources are summarized in table 3-9 of this chapter.

Not included in this study are the emissions from polyvinyl chloride compounders and fabricators, which account for less than one half of one percent of the national vinyl chloride emissions. Reference 10 gives a complete description of these two industries and their emissions. Also not included are miscellaneous sources such as aerosols, pesticides, other processes which use vinyl chloride as a chemical intermediate, processes which produce vinyl chloride as a by-product, and transfer operation of vinyl chloride outside of ethylene dichloride - vinyl chloride or polyvinyl chloride plants.

References for Description of the Process

1. Thirty-six plants reported this emission (generally known as the reactor safety valve release) during spring, 1974 in response to a request for information under section 114 of the 1970 Clean Air Act. See Ref. 4.
2. Seventeen plants reported this emission which is termed the "stripper loss" during spring, 1974 in response to a request for information under section 114 of the 1970 Clean Air Act. See Ref. 4.
3. All reporting suspension, dispersion, and solution producers reported this emission (thirty-nine plants in total) during spring, 1974 in response to a request for information under section 114 of the 1970 Clean Air Act. See Ref. 4. The emission point is usually called the slurry blend tank loss.
4. Complied from "In-depth Study of Polyvinyl Chloride Production", draft document prepared for the Environmental Protection Agency by Houdry Division of Air Products and Chemicals, December 6, 1974.
5. All producers reported this emission known as fugitive or unaccounted losses during spring, 1974 in response to a request for information under section 114 of the 1970 Clean Air Act.
6. "In-depth Study of Vinyl Chloride Production," draft document prepared for the Environmental Protection Agency by Houdry Division of Air Products and Chemicals, December 1974.
7. "Engineering and Cost Study of Air Pollution Control for the Petrochemical Industry Volume 3: Ethylene Dichloride Manufacture by Oxychlorination," prepared for the Environmental Protection Agency by Houdry Division of Air Products and Chemicals, November 1974.
8. Reference 6.
9. Reference 6.

10. "Vinyl Chloride Monomer Emissions From the Polyvinyl Chloride Processing Industries," prepared for the U.S. Environmental Protection Agency by A. D. Little, Inc., May, 1975.

11. Farmer, Jack R. and Goodwin, Don R., Trip Note, "Goodrich, Henry, Illinois Plant Inspection," April 8, 1975.

12. Telephone conversation with Mr. Jim Mullins, Senior Engineer, Shell Oil Company, April 8, 1975.

13. Telephone conversation with Mr. John Barr, Technical Manager, Air Products and Chemicals, April 9, 1975.

14. McGraw Hill Publish Company, Modern Plastic December, 1974, p. 18.

Table 3-1

Producing Companies, Plant Locations, and Capacities - Ethylene Dichloride

Producing Company	Plant Location	December, 1974 Capacity (Millions of Kilograms/Year)
Allied Chemical Co.	Baton Rouge, Louisiana	295
B. F. Goodrich Co.	Calvert City, Kentucky	455
Continental Oil Co.	Lake Charles, Louisiana	455
Diamond Shamrock Corp.	Deer Park, Texas	120
Dow Chemical Co.	Freeport, Texas	590
	Oyster Creek, Texas	500
	Plaquemine, Louisiana	525
Ethyl Corp.	Baton Rouge, Louisiana	250
	Houston, Texas	120
Pittsburgh Plate Glass Co.	Guayanilla, Puerto Rico	380
	Lake Charles, Louisiana	455
Shell Oil Co.	Deer Park, Texas	545
	Norco, La.	530
Stauffer Chemical Co.	Long Beach, California	135
Union Carbide Corp.	Taft, Louisiana	70
	Texas City, Texas	70
Vulcan	Geismar, Louisiana	110
TOTAL		5,605

SOURCE: Chemical Economics Handbook, Stanford Research Institute, Menlo Park, California, February, 1975, pp. 648.5052Q-648.5053I.

MAP 3-1

ETHYLENE DICHLORIDE PLANT LOCATION --▲

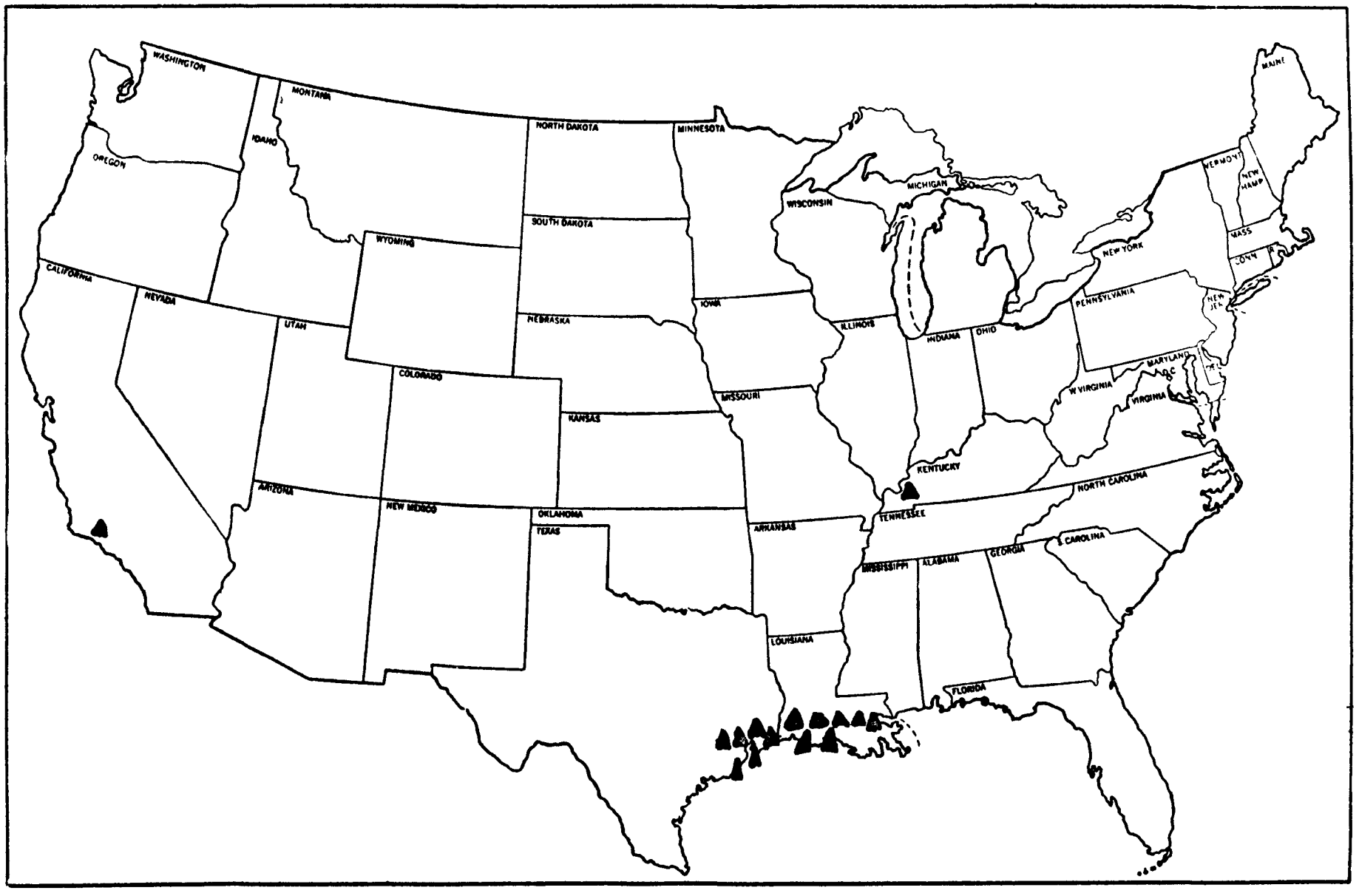

HEW-113

Table 3-2

Producing Companies, Plant Locations, and Capacities - Vinyl Chloride

Producing Company	Plant Location	June, 1974 Capacity (Millions of Kilograms/Year)
Allied Chemical Corp.	Geismar, Louisiana	155
B. F. Goodrich Co.	Calvert City, Kentucky	455
Continental Oil Co.	Westlake, Louisiana	330
Dow Chemical Co.	Freeport, Texas	80
	Oyster Creek, Texas	320
	Plaquemine, Louisiana	155
Ethyl Corp.	Baton Rouge, Louisiana	120
	Houston, Texas	70
Monochem, Inc.*	Geismar, Louisiana	135
Pittsburgh Plate Glass Co.	Guayanilla, Puerto Rico	225
	Lake Charles, Louisiana	135
Shell Oil Co.	Deer Park, Texas	410
	Norco, Louisiana	320
Stauffer Chemical Co.	Long Beach, California	75
Tenneco, Inc.*	Houston, Texas	115
TOTAL		3,100

SOURCES: Phone conversation with Chemical Marketing Reporter, June, 1974, and non-confidential data supplied by industry under Section 114 of the Clean Air Act.

*Vinyl chloride is produced at these plants by the addition of hydrogen chloride to acetylene.

MAP 3-2

VCM PLANT LOCATIONS -- ▲

HEW-113

Table 3-3

Producing Companies, Plant Locations, and Capacities - PVC Resins

Producing Company	Plant Location	May, 1975 Capacity (Millions of Kilograms/Year)
Air Products, Inc.	Calvert City, Kentucky	60
	Pensacola, Florida	35
B. F. Goodrich Co.	Avon Lake, Ohio	120
	Henry, Illinois	100
	Long Beach, California	50
	Louisville, Kentucky	65
	Pedricktown, New Jersey	65
Borden, Inc.	Illiopolis, Illinois	65
	Leominster, Massachusetts	80
Continental Oil Co.	Aberdeen, Mississippi	120
	Oklahoma City, Oklahoma	100
Diamond Shamrock Corp.	Delaware City, Delaware	45
	Deer Park, Texas	125
Dow Chemical Co.	Midland, Michigan	45
Ethyl Corp.	Baton Rouge, Louisiana	80
Firestone Tire Co.	Perryville, Maryland	105
	Pottstown, Pennsylvania	75
General Tire Co.[1]	Ashtabula, Ohio	55
Georgia-Pacific Corp.	Plaquemine, Louisiana	100
Goodyear Tire Co.	Niagara Falls, New York	45
	Plaquemine, Louisiana	50
Great American Chemical Corp.	Fitchburg, Massachusetts	30
Jennat Corporation[4]	Torrance, California	2
	Tucker, Georgia	3
	Somerset, New Jersey	2
Keysor-Century Corp.	Saugus, California	15
Monsanto Co.[2]	Springfield, Massachusetts	30

Table 3-3 (Con't)

Producing Companies, Plant Locations, and Capacities - PVC Resins

Producing Company	Plant Location	May, 1975 Capacity (Millions of Kilograms/Year)
Occidental Petroleum Corp.	Burlington, New Jersey	75
	Hicksville, New York	7
Pantasote Co.	Passaic, New Jersey	25
	Point Pleasant, W. Va.[1]	45
Robintech, Inc.	Painesville, Ohio	115
Shintech, Inc.[3]	Freeport, Texas	100
Stauffer Chemical Co.	Delaware City, Delaware	80
	Long Beach, California	70
Tenneco Chemicals, Inc.	Burlington, New Jersey	75
	Flemington, New Jersey	30
	Pasadena, Texas	110
Union Carbide Corp.	South Charleston, W. Va.	25
	Texas City, Texas	135
Uniroyal, Inc.	Painesville, Ohio	50
TOTAL		2,609

NOTES: [1]Pantasote's Point Pleasant, West Virginia plant is 50% owned by General Tire Company
[2]Due to close in 1975
[3]Joint venture of Robintech and Shin-etsu Chemical Co. of Tokyo
[4]Wholly owned subsidiary of Union Carbide Corporation

SOURCES: 1) Chemical Marketing Reporter, May 20, 1974.
2) Modern Plastics, January, 1975, p. 58.
3) Non confidential data supplied by industry under Section 114 of the Clean Air Act.

MAP 3-3

PVC PLANT LOCATIONS --▲

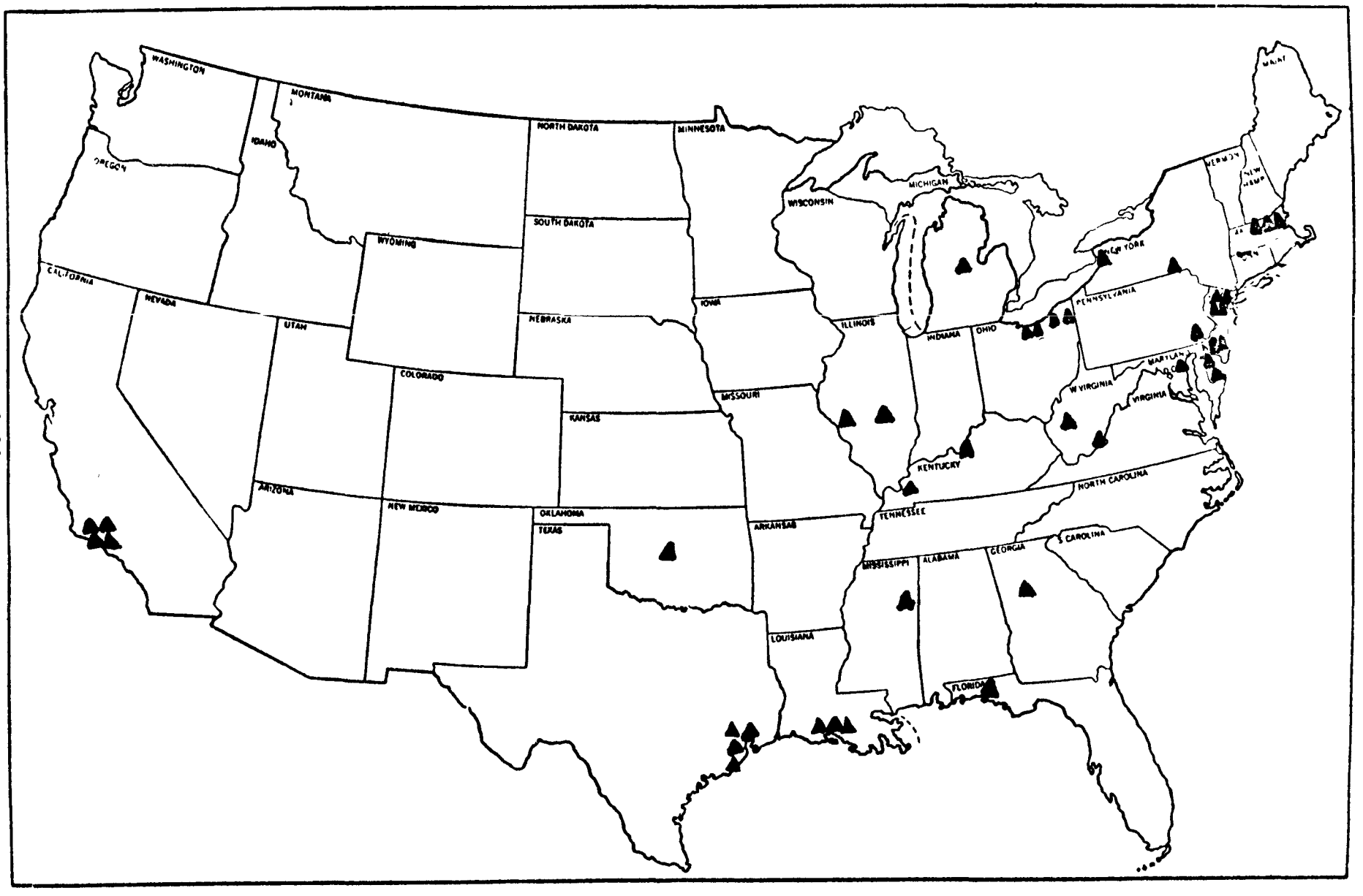

HEW-113

Table 3-4

PVC Producers by Process

	SUSP	EMUL	BULK	SOLN
Air Products	Yes	No	No	No
B. F. Goodrich	Yes	Yes	Yes	No
Borden	Yes	No	No	No
Continental Oil	Yes	No	No	No
Diamond Shamrock	Yes	Yes	No	No
Dow Chemical	No	Yes	No	No
Ethyl Corporation	Yes	Yes	No	No
Firestone	Yes	Yes	No	No
General Tire	Yes	No	No	No
Georgia-Pacific	Yes	No	No	No
Goodyear	Yes	No	Yes	No
Great American Chemical	Yes	No	No	No
Keysor-Century	Yes	No	No	No
Monsanto	Yes	Yes	No	No
Occidental Petroleum	Yes	No	Yes	No
Pantasote Co.	Yes	No	No	No
Robintech Inc.	Yes	No	No	No
Shintech	Yes	No	No	No
Stauffer Chemical Co.	Yes	Yes	No	No
Tenneco Chemicals Inc.	Yes	Yes	No	No

Table 3-4 (Con't)

PVC Producers by Process

	SUSP	EMUL	BULK	SOLN
Union Carbide	Yes	Yes	Yes	Yes
Uniroyal Inc.	Yes	Yes	No	No

NOTE: N.A. = not available

SOURCE: Non confidential data supplied by industry under Section 114 of the Clean Air Act.

Table 3-5
VINYL CHLORIDE EMISSIONS
FOR ETHYLENE DICHLORIDE-VINYL CHLORIDE

Source	VCM Emissions kg/100 kg (lb VCM/100 lb) VCM
Fugitive	.1215
EDC Finishing Column	.05
VCM Finishing Column	.24
Oxychlorination Process	.0364
Process Water	.0007
TOTAL	.4479

Table 3-6
VINYL CHLORIDE EMISSIONS
FOR SUSPENSION POLYVINYL CHLORIDE PROCESS

Source	Stream I.D. on Simplified Flow Diagram 4-1	VCM Emissions kg/100 kg (lb VCM/100 lb) PVC
Fugitive Emissions		1.50
Reactor Opening Loss	B	0.14
Stripper Loss	C	0.32
Monomer Recovery Vent	D	0.48
Slurry Blend Tank	E	0.42
Centrifuge Vent	F	0.13
Dryer Exhaust	G	
Silo Storage	G	0.70
Bagger Area	G	
Bulk Loading Operations	G	
Reactor Safety Valve Vents	B	0.20
Process Water		.025
TOTAL		3.92

Table 3-7
VINYL CHLORIDE EMISSIONS
FOR DISPERSION POLYVINYL CHLORIDE PROCESS

Source	Stream I.D. on Simplified Flow Diagram 4-2	VCM Emissions kg/100 kg (lb VCM/100 lb) PVC
Fugitive Emissions		1.13
Reactor Opening Loss	B	0.15
Stripper Loss	C	1.23
Monomer Recovery Vent	D	0.50
Slurry Blend Tank	E	0.34
Dryer Exhaust	G	
Silo Storage	G	2.41
Bagger Area	G	
Bulk Loading Operations	G	
Reactor Safety Valve Vents	B	0.22
Process Water		.025
TOTAL		6.01

Table 3-8
VINYL CHLORIDE EMISSIONS
FOR BULK POLYVINYL CHLORIDE POLYMERIZATION

Source	Stream I.D. on Simplified Flow Diagram 4-3	VCM Emissions kg/100 kg (lb VCM/100 lb) PVC
Fugitive Emissions		0.48
Reactor Opening Loss	B	0.08
Monomer Recovery Vent	D	1.50
Reactor Safety Valve Vents	B	0.10
Silo Storage	G	
Bagger Area	G	0.23
Bulk Loading Operations	G	
Process Water		.011
TOTAL		2.40

Table 3-9
VINYL CHLORIDE EMISSIONS
FOR SOLVENT POLYVINYL CHLORIDE POLYMERIZATION

Source	Stream I.D. on Simplified Flow Diagram 4-4	VCM Emissions kg/100 kg (lb VCM/100 lb) PVC
Fugitive Emissions		0.03
Reactor Opening Loss	B	0.50
Stripper Loss	C	0.05
Monomer Recovery Vent	D	0.31
Dryer Exhaust	G	
Silo Storage	G	0.83
Bagger Area	G	
Bulk Loading Operations	G	
Reactor Safety Valve Vents	B	0.06
Process Water		0.002
TOTAL		1.78

Table 3-10

SUMMARY OF FUGITIVE EMISSIONS[1/]

Company	Plant	Process	VCM Emissions[3/] kg/100 kg (lb VCM/100 lb) PVC Produced
A	A-1	Suspension	0.88
B	B-1	Suspension	1.82[2/]
	B-2	Suspension	1.78[2/]
C	C-1	Suspension	2.68[2/]
	C-2	Suspension	1.54[2/]
	C-3	Suspension	5.50[2/]
	C-4	Suspension	1.22[2/]
	C-5	Suspension	1.04[2/]
D	D-1	Suspension	1.72[2/]
E	E-1	Suspension	0.54
F	F-1	Suspension	1.01
	F-2	Suspension	0.63
G	G-1	Suspension	0.59
	G-2	Suspension	0.7
H	H-1	Suspension Copolymer	1.27
		Suspension Resin Avg.	1.52
I	I-1	Copolyper Dispersion	1.05
		Homopolymer Dispersion	1.16
J	J-1	Dispersion	1.02
K	K-1	Dispersion	0.08
	K-2	Dispersion	2.60
	K-3	Dispersion	0.008
	K-4	Dispersion	2.2
		Dispersion Resin Avg.	1.15

Table 3-10 (cont.)

SUMMARY OF FUGITIVE EMISSIONS

Company	Plant	Process	VCM Emissions kg/100 kg (lb VCM/100 lb) PVC Produced
L	L-1	Latex	0.22
M	M-1	Latex	1.9
	M-2	Latex	2.9
		Latex Resin Average	1.67
N	N-1	Bulk	0.47
O	O-1	Bulk	0.82
P	P-1	Bulk	0.25
		Bulk Resin Average	0.50
Q	Q-1	Solution	0.025
		Solution Resin Average	0.025
R	R-1	Vinyl Chloride by Ethylene Dichloride	0.0038 4/
S	S-1	Vinyl Chloride by Ethylene Dichloride Path	0.0152 4/
		EDC Path Average	0.0095 4/
T	T-1	Vinyl Chloride by Acetylene Path	0.151
		Acetylene Path Average	0.151

1/ All data compiled by Houdry Division of Air Products and Chemicals and Environmental Protection Agency from responses to section 114 requests.

2/ These companies estimated a 50% vinyl chloride monomer - 50% polyvinyl chloride particulate breakdown of fugitive emissions at their plants. In the judgment of the Environmental Protection Agency, that breakdown is not realistic. The particulate is considered as a small part of fugitive emissions. In order to be consistent with other submittals, the particulate portion of the reported loss was assumed to be vinyl chloride.

3/ All figures given here were calculated by a material balance. Plants which used other methods of fugitive emission estimates (i.e., observation, emission factors) were not included in this table.

4/ These figures do not include loading and unloading operation losses. With inclusion of these losses the fugitive emission factor is 0.05 kg/100 kg (lb VCM/100 lb) VCM.

Table 3-11

Vinyl Chloride Monomer Content in Streams Discharging to Sewer

Source No.	No. of Sources	Source Description	Average Flow	Flow Range	Flow Type[1]	Average VCM Conc.	Conc. Range	No. of Samples Taken	Total VCM Lost per day
1	1	100 Seal Water (Primarily Suspension)	2.0 gpm	1.0 → 10 gpm	Intermittent	794 ppm	-	1	19
2	1	400 Seal Water (Primarily Dispersion)	3.5 gpm	3.0 → 10 gpm	Intermittent	660 ppm	-	1	27.7
3	36	HRC Water							
		Suspension	300 Gal/chg.	250 → 500 gpc	Intermittent	1.32 ppm	.14 → 6.9	9	.2 lb.
		Dispersion	2000 Gal/chg.	1500 → 2500 gpc	Intermittent	.64 ppm	.56 → .71	2	.15 lb.
4	3	Vacuum Jet Water	25 gpm	15 → 45 gpm	Continuous	.45 ppm	-	1	.13 lb.
5	2	Recycle Tanks	200 gal./shift	-	Intermittent	1880 ppm	1672 → 2137	3	9.4 lb.
6	1	Roof Stack Water	100 Gal./Day	-	-	.06	-	1	Negligible
7	1	Concentrator (Dispersion)	130 gpm	-	Continuous	Based on 1000 ppm Reduction and 15 gpm feed			199 lb.
8	1	Fluid Bed Dryer (Suspension)	65 gpm	30 → 70 gpm	Continuous	.11 ppm	-	1	.09 lb.

Table 3-11 (continued)

Vinyl Chloride Monomer Content in Streams Discharging to Sewer

Source No.	No. of Sources	Source Description	Average Flow	Flow Range	Flow Type[1]	Average VCM Conc.	Conc. Range	No. of Samples Taken	Total VCM Lost per day
9	1	Venturi Dryer (Suspension)	25 gpm	10 -- 35 gpm	Continuous	.04 ppm	.0 → .08		.012 lb.
10	1	Rotary Dryer (Suspension)	5 gpm	-	Continuous	.04	.0 → .08		.002 lb.
11		Housekeeping	?	?	-	0	0		0
TOTAL									(255.68)[2] (156.68)[3]

[1]Describes flow when source is operational.

[2]Parenthesis number reflects total emission of source 7.

[3]Number reflects 50% of total emissions of source 7.

4. CONTROL TECHNOLOGY

This chapter addresses the control techniques that can be applied and the emission reductions that can be achieved for each of the sources of vinyl chloride emissions identified in chapter 3.

The control techniques that can be applied to reduce vinyl chloride emissions fall into the following general categories:

1. Add-on type control systems such as sorbers, refrigeration systems or incinerators which reduce emissions from captive or point sources.

2. The reduction of emissions from pumps, compressors, and valves through the installation of effective seals on rotating or reciprocating shafts or by enclosing the equipment.

3. The reduction of emissions from pumps, valves, flanges, vessels, transfer operations, piping and other processing equipment during maintenance and inspection by adopting appropriate operating and maintenance procedures.

4. Reducing emissions by altering the manufacturing process such as adding improved stripping capacity to reduce the emissions from the slurry blend tanks, centrifuges, dryers, and storage silos by reducing the vinyl chloride content of the polyvinyl chloride resin.

The control techniques described under items 1-3 above are generally applicable to both polyvinyl and ethylene dichloride-vinyl chloride plants and

will be discussed as such below. In addition the principle of each control technique is described, specific emission points in the polyvinyl chloride and ethylene dichloride-vinyl chloride plants where the control technique is or is not applicable are pointed out, and factors such as high gas volumes and high temperatures that may limit the applicability or effectiveness of the control technique are addressed. Emphasis is placed on identifying the emission level the control device can achieve by incorporating good engineering design and operating practice.

Process changes and other control techniques that are specific to an individual process are discussed in separate sections that describe the individual process.

Not discussed in this chapter are those control methods which the EPA considered to be, at best, too underdeveloped to be considered candidates for best available control technology. The relatively new laboratory studies on ozonization and oxyphotolysis, for example, are omitted. (Both methods are used to oxidize vinyl chloride monomer into less toxic substances). Undemonstrated methods such as polyvinyl chloride dryer air recycle and silo stripping and adsorption were also not discussed in detail.

Included in this chapter are those data which were accumulated during the course of EPA's investigation which show the capability of specific control devices or techniques to remove vinyl chloride from process streams. These data are included in section 4.11.

4.1 ADSORPTION

The property of a surface to retain molecules of a fluid which has contacted the surface is known as adsorption. This phenomenon permits gases, liquids, or solids, even at small concentrations, to be selectively removed and captured from gaseous streams with specific materials known as adsorbents. The material adsorbed is called the adsorbate.[1] The ethylene dichloride-vinyl chloride and polyvinyl chloride manufacturers and the vendors of adsorption resins and activated carbon have recently been experimenting with two adsorbents (activated carbon and polymeric or resin adsorbents) for the removal of vinyl chloride from certain process streams in both polyvinyl chloride and ethylene dichloride-vinyl chloride plants. A discussion of the advantages and problems associated with the application of these two adsorbents follows.

4.1.1 Carbon Adsorption

Activated carbon is used to remove organic compounds from gaseous streams because, unlike other adsorbents, such as chemisorbents and silica gel which have an affinity for a highly reactive functional group in the adsorbate molecule or for moisture, carbon preferentially adsorbs organic materials. This fact gives carbon an advantage over other adsorbents in streams containing water and in streams in which all the adsorbed organics can be recycled to the process. Carbon adsorption systems presently in commercial and industrial use are oriented toward "air purification" and "solvent recovery." In either application, the gas stream is passed through a granular activated carbon bed. The organic (adsorbate) gas or vapor is retained by the carbon and the purified stream passes through. When the carbon bed has reached its capacity to retain vapor (saturation), the gas mixture flow is stopped or diverted to a system containing fresh carbon while the collected organic vapors are removed (desorbed) from the spent carbon or the carbon bed is replaced.

For many industrial applications, it is economically expedient to desorb, and thus regenerate, the saturated carbon for further use. The absorbate is generally removed by heating the carbon. This regeneration is accomplished by passing a hot gas through the carbon bed. Saturated steam is the usual source of heat and is sufficient to strip most types of organic vapors. The steam and desorbed organic compound(s) are then condensed by cooling. The water and organic material can be separated by decantation or distillation. After the adsorbate is stripped, the carbon is not only hot, but saturated with water, (if steam is used or the pollutant stream contains water). Cooling and drying are usually done by blowing pollutant-free ambient air or inert gases, such as hot nitrogen, through the carbon bed.

Adsorption has been used in applications where profitable solvent recovery is possible, i.e. where the value of the recovered solvent will pay the cost to install and operate the adsorption system.

Generally speaking, activated carbon systems are not economical when large volumes of gases that contain low concentrations of organic compounds have to be treated. The larger the gas volume, the larger the carbon bed that is required. This not only increases the investment cost but the increased quantity of steam or heat that is required to regenerate the carbon bed increases operating costs. Similarly, for a given gas volume, the quantity of removed solvent will vary in direct proportion to the concentration of the organic material in the gas stream being treated.

The interest has been, in the past, on solvent vapor concentrations well above 700 ppm as this level represents the profit-loss breakeven concentration for many organics.[2] However, it is theoretically possible

to apply the principles of carbon adsorption to lower stream concentrations. At least one printing company has used carbon adsorption systems on stream concentration averages as low as 400-1000 ppm for the collection of toluene from rotogravure and flexographic presses.[3] Another company collects ethanol in concentrations ranging from 206-505 ppm at 2040 cubic meters per minute (72,000 acfm) with an outlet concentration of 8-10 ppm.[4]

While carbon adsorption has not been applied on high volume sources [with volumes up to (72,000 acfm) 2040 cubic meters/min] in the vinyl chloride industries, primarily because of economics, at least one polyvinyl chloride manufacturer is currently operating a carbon adsorption unit on relatively high concentration streams.[10] The industry has questioned the applicability of carbon adsorption in the control of vinyl chloride monomer because of the possibility of polymerization on the bed which would plug the bed and necessitate its replacement. The company's pilot study indicated that this did not take place after 28 cycles of saturation, desorption and drying.[5] One vendor of activated carbon stated that their own studies did not show any evidence of polymerization on the carbon bed after 15 cycles.[6,7] The polyvinyl chloride manufacturer mentioned above has since operated the carbon adsorption unit on full plant scale for over 7000 cycles[10] with an outlet concentration of less than 10 ppm vinyl chloride monomer.

The unit is used to collect vinyl chloride from a monomer recovery system vent and a slurry blend tank vent. These two streams have relatively high concentrations of vinyl chloride (on the order of 100,000-300,000 ppm), low stream volumes (less than 1.7 cubic meters/minute or 60 scfm total), and low temperature (approximately 10°C or 50°F).[5]

The cost of applying carbon adsorption to control emissions from the dryers and bulk storage silos in polyvinyl chloride plants will depend on the

bed life. Bed life is particularly important for these applications due to the large quantities of carbon that are required and some development work will be required to quantify this parameter. The available data do not conclusively establish the bed life of carbon for all streams. Based on data from one design company and the above mentioned manufacturer's data, an outlet concentration lower than 10 ppm could be expected for most streams.[8,10]

In ethylene dichloride-vinyl chloride plants, carbon adsorption could be readily applied to the small gas volumes associated with the vinyl chloride and ethylene dichloride distillation columns. Some development work would be required to determine the costs that would be associated with treating the oxychlorination vent. A number of different organics would be captured by the system and, with the possible exception of the vinyl chloride distillation column, recycling of these organics would not be practical. Therefore, it would be necessary to dispose of the captured vinyl chloride by incineration or other means.

The optimum source for application of carbon adsorption given the present state of the art is high concentration, low volume, low temperature streams (generally, adsorption is more efficient at lower temperatures) such as polyvinyl chloride plant monomer recovery systems, closed polyvinyl chloride slurry blend tanks containing nitrogen or other inerts in the vapor space, and vinyl chloride storage areas. Table 4-3 shows emission reductions possible for various sources in both ethylene dichloride-vinyl chloride and polyvinyl chloride plants with application of carbon adsorption.

One design company has examined the limitations of carbon adsorption as applied to streams such as polyvinyl chloride dryer exhausts, which have large volumes of air with low concentrations of vinyl chloride. The company suggests that the concentration of vinyl chloride in the stream can be

increased by recycling the exhaust air through the dryer.[8] The method is not demonstrated as of this date.

In order to give an idea of the size of the adsorption unit required for a typical application of carbon adsorption the following description is offered. The parameters which determine the required size of an efficient carbon adsorption unit are varied. Effluent concentrations, stream volume, particulate matter and water, corrosion problems, and temperature are all variables which make nearly every application unique. In addition to stream characteristic variations, there are at least three different types of adsorber designs, each with its own special design requirements. For the (60 scfm) application described above on the polyvinyl chloride plant monomer recovery system and slurry blend tank, the unit consists of 2-four foot inside diameter vertical beds with a packed height of 10 feet. Activated carbon is a coked bituminous coal. The adsorption unit itself is skid mounted.[5]

Section 4.12 - Data Demonstrating Capability of Selected Control Techniques discusses and evaluates this carbon adsorption unit. The section also includes data from one vendor of activated carbon which would be of benefit in evaluating adsorption systems used to control vinyl chloride monomer emissions.

4.1.2 Resin Adsorption

The mechanism of adsorption on a resin or polymeric adsorbent is the same as on activated carbon except that the resin has a higher affinity for the specific organic material being removed.[2] This special affinity gives resin adsorbents an advantage over carbon on streams containing a multitude of organic materials.

Resin adsorption has historically been attractive because of the resin's resistance to oxidation on the bed. Carbon beds lack this resistance due to carbon's flammability. This is an important safety consideration in

streams containing oxygen. Producers of resin adsorbents claim that the capacity of resin to retain organics is higher than carbon[9], but resins give up the materials more readily than carbon on desorption. This would indicate that resin adsorption units could be constructed with smaller bed sizes.

A producer of polymeric adsorbents claims that other advantages of the resins are that they have greater resistance to water adsorption (the adsorption of water can "blind" the bed), and are mechanically stronger than carbon. Dusting (a pulverized condition of the carbon) does not occur as readily on these resin materials.[11]

Programs for development of a resin adsorbent for vinyl chloride have just recently been undertaken. Data to define the effectiveness or costs of the polymeric adsorbents to treat streams containing vinyl chloride are presently not available.

References for Adsorption

1. Air Pollution Engineering Manual, Danielson, J. A. (ED.). U. S. Environmental Protection Agency, OAQPS, Research Triangle Park, N. C., EPA Publication No. AP-40. 1973. 987 p.

2. Package Sorption Device System Study, MSA Research Corporation for Office of Research and Monitoring, U. S. Environmental Protection Agency, Washington, D. C., EPA Publication No. R2-73-202. April 1973.

3. Harvin, Richard L., "A Modern Design Solvent Recovery Plant," Technical Report for the 70th National Meeting of the American Institute of Chemical Engineers, September 1971.

4. Conversation with Mr. William R. Meyer, Environmental Project Manager, Vulcan-Cincinnati, Inc., February 19, 1975.

5. Letter with attachments from W. P. Anderson, Tenneco Chemical Company, to Don R. Goodwin, EPA, October 18, 1974.

6. Letter with attachments from William D. Faulkner, Calgon Corporation, to Stanley T. Cuffe, EPA, October 18, 1974.

7. Letter with attachments from William D. Lovett, Calgon Corporation to Stanley T. Cuffe, EPA, December 19, 1974.

8. Letter with attachments from R. W. Alexis, Chemical Design, Inc., to Don R. Goodwin, EPA, December 6, 1974.

9. Letter from James S. Clovis, Rohm and Haas Company, to Leslie Evans, EPA, November 20, 1974.

10. Letter with attachments from W. P. Anderson, Tenneco Chemical Company, to Leslie B. Evans, EPA, May 13, 1975.

11. Conversation with Marvin Hurwitz, Steven Rock, Chester Fox, and John Thompson, Rohm & Haas Company, July 13, 1975.

4.2 INCINERATION

Vinyl chloride can be combusted with oxygen to form hydrogen chloride, carbon dioxide and water.

$$CH_2 = CHCl + 2\ 1/2\ O_2 \rightarrow 2\ CO_2 + H_2O + HCl$$

Because there is sufficient hydrogen in the vinyl chloride molecule to combine with the chlorine to form hydrogen chloride little free chlorine should be formed. The efficiency of the oxidation of vinyl chloride depends primarily on the temperature obtained and the residence time in the combustion device. In general chlorine does inhibit the oxidation reaction and even in low concentrations may cause higher temperatures and longer residence times to be needed for complete destruction of pollutants.[1] Little data is available on the temperature or residence time required to destroy vinyl chloride and therefore some additional testing might be required prior to the design of a combustion device to handle such wastes. The information available, however, indicates that the vinyl chloride content of a gas stream can be reduced to less than 10 ppm by incineration in a steam boiler.[6] Tables 4.3 and 4.4 show how effectively incineration could reduce the emissions from various sources in ethylene dichloride-vinyl chloride and polyvinyl chloride plants.

Vinyl chloride can be combusted in a flare, a direct-flame afterburner, a catalytic afterburner, or a boiler, and combustion is generally applicable to all sources in ethylene dichloride-vinyl chloride and polyvinyl chloride plants. The choice of device will depend on the heat value of the stream, the amount of gas to be combusted and whether or not any steam produced could be used in the plant.

A flare can and is being used to combust small vinyl chloride streams or intermittent emissions such as would occur during a plant upset.[2] Flares are already in existence in many petrochemical complexes and most

vinyl chloride plants are located in or near these complexes. However, the use of a flare to oxidize vinyl chloride has several disadvantages. The hydrogen chloride produced by the oxidation of vinyl chloride in the flare cannot be controlled and therefore the flare may not be acceptable as a long term solution. In addition there are large dilute gas streams present in both ethylene dichloride-vinyl chloride and polyvinyl chloride plants that cannot support combustion. Therefore natural gas or other fuel must be added to achieve combustion and all the heat produced is wasted. Due to the presence of the open flame, flares must be installed away from the plant or they require a considerable area in the plant for safe installation.

A direct-flame afterburner (or vapor incinerator) can be used to combust offgas streams from ethylene dichloride-vinyl chloride and polyvinyl chloride plants. These afterburners consist of a refractory lined chamber fitted with one or more natural gas burners at the inlet end. The efficiency of this type of afterburner is determined by its temperature. One source estimates that a temperature of 981°C (1800°F) would be required.[3] Another source estimates that a temperature of 981°C (1800°F) and residence time of two seconds would be necessary for essentially complete combustion.[4] Unlike flares, afterburners can be designed to recover the heat present in the combustion gases. This is important when large volumes of dilute gases that will not support combustion (such as the dryer exit gas in a polyvinyl chloride plant) are burned with the supplemental fuel required to achieve combustion. Heat exchange can be used to reduce the amount of fuel required or the exit gas from the incinerator can be used to generate steam in a boiler. The combustion gas exiting from the heat exchanger or boiler can then be scrubbed with water or caustic solution to remove the hydrogen chloride to form dilute hydrochloric acid or a sodium chloride

solution. For each kilogram of vinyl chloride combusted 0.58 kilograms of hydrogen chloride are produced or 0.93 kilograms of sodium chloride if sodium hydroxide is used for neutralization. The disadvantage of using direct-flame afterburners fitted with hydrogen chloride scrubbers for the control of vinyl chloride emissions in ethylene dichloride-vinyl chloride and polyvinyl chloride plants is that the large gas streams such as the dryer and storage silo exhaust in the polyvinyl chloride plants will not support combustion and large amounts of natural gas or other fuel will be required. In many instances control of the oxychlorination process in the ethylene dichloride-vinyl chloride plant will also require supplemental fuel. In addition they are expensive to build because of the corrosion problem caused by the hydrogen chloride in the burner and in the scrubber.

Direct-flame afterburners of the type described which burn chlorinated hydrocarbons are presently in operation in at least seven locations in the United States. Some of these burners combust a gas stream, some combust a liquid stream of chlorinated hydrocarbons and some combust a combination of the two.[3,5] None of these installations, however, combust gas streams as large as the effluent from the oxychlorination process or the polyvinyl chloride dryer exit gas stream; and none of these installations recover heat by steam generation.

Vinyl chloride may be combusted in a catalytic afterburner. The catalyst changes the rate of oxidation and permits the reaction to occur at a somewhat lower temperature than in a direct-flame afterburner. The primary advantage of catalytic afterburners is that less fuel would be required to combust dilute (low Btu) gas. The primary disadvantage is the higher cost of the afterburner. One catalytic afterburner of the type described is presently in operation in the United States.[3] A production size unit is being constructed for one oxychlorination process. A pilot unit has been operating on the same plant for months.[8]

The fireboxes of steam boilers can be used to incinerate gaseous streams containing vinyl chloride. It should be possible for plants operating steam boilers near vinyl chloride sources to use large dilute streams, such as the dryer exit stream, as combustion air in the boiler. Such an approach would not significantly change the plants fuel requirements. This technique could be used with existing boilers or in new plants.

There are several disadvantages. There is a potential corrosion problem in the firebox because of the hydrogen chloride produced, and careful design is required. It has been found that the effluent stream is especially corrosive at temperatures either above 316°C (600°F), or below the hydrogen chloride dew point. In order to maintain steam coils within the non-corrosive temperature range 19 atmosphere saturated steam is generated in the boiler and effluent gases are exhausted at 288°C (550°F). Adequate instrumentation is required to see that the tube wall temperatures do not exceed 316°C (600°F) or go below 204°C (400°F). It is also necessary to purge chlorinated compounds from the system prior to furnace shutdown.[3]

There are presently two steam boilers in the United States being used to incinerate gaseous vinyl chloride streams. One of these has been tested by the Environmental Protection Agency and a summary of the test is presented in section 4.12. In this installation a concentrated hydrocarbon stream containing 1 to 18 percent vinyl chloride is used with supplemental natural gas and combustion air to generate about 3400 kg (7500 pounds) an hour of 18 atmosphere steam. The boiler is a fire tube Dixon marine type which has been modified to burn chlorinated hydrocarbons. (The exact nature of the modification is confidential). The exit of the boiler is scrubbed in a packed column with a waste water stream from the plant that has a pH of 11. During the test the exit from the boiler contained an average of 4 ppm vinyl

chloride for a removal efficiency of 99 percent.[6] Although a previous boiler lasted for only five years, the present boiler has been in operation for three years and the service factor has been 98 per percent.

The second steam boiler in the United States burning chlorinated waste material has had some corrosion problems which now seem to be corrected.[3]

A B. F. Goodrich licensee in Rotterdam, Holland, uses a thermal incinerator and a carbon steel boiler for heat recovery on a mixed stream that includes the emissions from the oxychlorination process from their balanced 300,000 metric tons per year ethylene dichloride-vinyl chloride plant. Although no details are available on the boiler service factor the unit has been in operation without difficulty for more than two and one-half years. The boiler flue gas is not scrubbed to remove hydrogen chloride.[7]

Although several boilers burning chlorinated hydrocarbons have been in operation for several years the long term reliability of this type of boiler has not been completely demonstrated. In some cases operators may choose to have two boilers with one on standby for use if the first is shut down.

References for Incineration

1. Afterburner System Study, EPA Contract EHSD 71-3.

2. Letter with attachments from R. E. Van Ingen, Shell Chemical Company to Don R. Goodwin, EPA, July 5, 1974.

3. Engineering and Cost Study of Air Pollution Control for the Petrochemical Industry Volume 3: Ethylene Dichloride Manufacture by Oxychlorination, EPA 4501 3-73-006-c, November 1974.

4. Shell Chemical Representatives Conversation with EPA, Durham, N.C., April, 1975.

5. Chemical Week Magazine, April 19, 1972, p. 37.

6. Vinyl Chloride Testing Conducted at the American Chemical Company, Carson, California, EPA Contract 68-02-1400, Task No. 8, Scott Environmental Technology, Inc., EMB Project Report Number 75-VCL-2

7. Willard Bixby (B. F. Goodrich) conversation with Leslie B. Evans, February 14, 1975.

8. Diamond Shamrock representatives conversation with EPA, Durham, N.C. April 14, 1975.

4.3 SOLVENT ABSORPTION

Absorption is the process whereby one or more soluble components of a gas mixture are dissolved into a relatively nonvolative liquid solvent. From an air pollution standpoint, absorption is useful as a method of reducing or eliminating the discharge of air comtaminants to the atmosphere, while possibly yielding profits to the user.

The design of gas absorption equipment is intended to provide maximum contact between the gas and liquid solvent to insure interphase diffusion between the materials. There are other factors which influence the absorption rate, such as solubility of the gas in the particular solvent and the degree of chemical reaction, but these factors are characteristic of the constituents involved and are more or less independent of the equipment used. While such parameters as system temperature and pressure do affect the efficiency of the devices, the primary design parameter of absorption devices is the solvent surface exposure.[1]

There are a number of ways to accomplish contact between the gas and liquid. Packed towers, spray towers or spray chambers, and venturi scrubbers are devices which dispense liquid solvent into the gas stream. Tray towers and vessels with sparging equipment are examples of equipment that use gas dispersion.

Packed towers are filled with a packing material having a large surface-to-volume ratio; the packing is wetted by the absorbent to provide a large surface area of liquid for continuous contacting of gas. Spray towers disperse the liquid solvent in the form of a spray and pass the gas through the spray. Venturi scrubbers contact the gas and the absorbent in the throat of a venturi nozzle. Tray towers, or bubble plate columns, induce contact by means of a number of plates or trays arranged so that the gas is

dispersed through a layer of solvent on each plate. The number of plates required depends upon the difficulty of the mass transfer operation and the degree of separation desired.

The common absorbents for organic vapors are water, mineral oil, nonvolatile hydrocarbon oils, and aqueous solutions (e.g. sodium carbonate or sodium hydroxide).[2] While it is possible to use any of a number of aliphatic, aromatic or chlorinated solvents in the scrubbers,[3] the types of solvents which are currently used to control vinyl chloride emissions include ethylene dichloride,[4] acetone,[5] and the petroleum based hydrocarbon "Carnea Oil".[6] Trichloroethane has been used in the past.[3] The main considerations in choosing a solvent include:

a. A high solubility for vinyl chloride and a low solubility for air and water.

b. Low volatility to minimize losses during handling.

c. The solvent should be non-toxic, non-corrosive and non-flammable and should not constitute an explosion hazard.

d. A low cost solvent is necessary for economic reasons.

e. The solvent should either be easy to dispose of or be regenerable.[7]

After the gas has been scrubbed with a solvent in the absorber unit, the vinyl chloride is recovered from the enriched solvent by applying heat and vacuum. The vinyl chloride gas is then transferred to a monomer recovery system.[6]

At least three polyvinyl chloride producers currently use solvent absorbers in their plants. This equipment was put on emission points some years ago for economic reasons.[4,5,6] Other units scheduled for installation in the near future are being installed because of the low costs of this particular control technique for specific source control. Current application

of absorption is restricted to the monomer recovery system vent and storage area noncondensable gas vents in polyvinyl chloride plants. Two companies are planning to install units on storage area, distillation column, and loading operation noncondensable gas vents in ethylene dichloride-vinyl chloride plants.[8,9] All of these streams are high concentration, low volume sources

Another source in the polyvinyl chloride plant, in addition to the two areas mentioned above, which could be controlled by absorption is the slurry blend tank. The application of absorption in the vinyl chloride industry is currently limited to the control of transfer and storage areas. Table 4-3 gives a summary of sources, stream descriptions and expected reductions with application of solvent absorption.

It is possible to design an absorber for any of the sources listed above for very high efficiencies on the order of 99+ percent.

A packed tower, was installed in 1950 to recover vinyl chloride from the vent gases of a process stream off the synthesizing of vinyl chloride from acetylene and hydrogen chloride. The system was later adapted to serve solely as a vent gas scrubber following a condensing system. The solvent used is ethylene dichloride at a 152 liters (40 gallons) per minute circulation rate through the absorber. The inert volume through the scrubber is 3.54 cubic meters per minute (125 scfm). The unit operates with an efficiency of 99+ percent for an exit vinyl chloride concentration of 15 ppm and exit emission of 9.1 grams/hr (0.02 lb/hr).[4]

Section 4.12 Data Demonstrating Capability of Selected Control Techniques, includes a discussion of this absorber and evaluates its effectiveness in reducing emissions.

The factors which limit the use of absorption include concentration, volume, and temperature of the pollutant stream. To a great extent, each

of these limits can be overcome by engineering design (i.e., increasing the number of contact trays and cooling the gas streams before entry into the absorber). Practically, however, the recovery efficiency of control decreases with decreasing concentration and volume and increasing temperature. For this reason, certain streams within polyvinyl chloride and ethylene dichloride-vinyl chloride plants are better controlled with other methods. These streams include polyvinyl chloride dryers and ethylene dichloride-vinyl chloride oxychlorination vents.

References for Solvent Absorption

1. Air Pollution Engineering Manual, Danielson, J. A. (Ed), U. S. Environmental Protection Agency, OAQPS, Research Triangle Park, N. C., EPA Publication No. AP-40, 1973, 987 pp.
2. Control Techniques for Hydrocarbon and Organic Solvent Emissions from Stationary Sources, USD HEW-PHS-NAPCA, Washington, D. C., National Air Pollution Control Administration Publication No. AP-68. 1970.
3. Kleeberg, Charles F., EPA, Meeting Report, B. F. Goodrich Chemical Company, Cleveland, Ohio, September 26, 1974.
4. Letter with attachments from W. C. Holbrook, B. F. Goodrich Chemical Company, to Don R. Goodwin, EPA, November 15, 1974.
5. Letter with attachments from M. E. Eisenhour, Union Carbide Corporation, to Don R. Goodwin, EPA, June 21, 1974.
6. Letter with attachments from C. J. Kleinert, Firestone Plastics Company, to Don R. Goodwin, EPA, November 8, 1974.
7. "Vinyl Chloride Removal from Polyvinyl Chloride", Report to EPA, Office of Air Quality Planning and Standards, C. D. Callihan and E. McLaughlin.
8. Letter with attachments from W. M. Reiter, Allied Chemical Corporation, to Don R. Goodwin, EPA, June 27, 1974.
9. Letter with attachments from Mr. A. T. Raetzsch, PPG Industries, to Don R. Goodwin, EPA, June 21, 1974.

4.4 REFRIGERATION

Refrigeration systems are not the most effective means of reducing vinyl chloride emissions but they can be used in conjunction with other control equipment such as carbon adsorbers and solvent absorbers to reduce the load on these systems by condensing the bulk of the vinyl chloride and water,thus reducing the gas volume that has to be treated. The cooler gas temperature also improves the performance of both these devices.

Many organic compounds, because of their relatively high boiling points, can be removed from gas streams by simple condensation. Surface condensers which reduce temperatures through cooling are generally used in the vinyl chloride industry. In these devices, vinyl chloride vapor condenses on the outside surfaces of tubes through which the cooling medium, usually water, flows. The condensed vapor film drains to storage or disposal. Other coolants used in the industry include Freon[1/], propane, and propylene.

The effectiveness of refrigeration systems to reduce vinyl chloride emissions increases with decreasing temperature and increasing pressure. Reduction of vinyl chloride emissions by refrigeration is limited by the sharply increased costs associated with cooling and compressing the gas and by freezing if water is present in the gas. Usual design pressure and temperature are 4.4 atmospheres and 7°C (45°F). A condenser operating at such conditions would emit a stream containing 50 percent vinyl chloride. Lowering the temperature to -26°C (-15°F) and raising the pressure to 5.8 atmospheres would decrease the vinyl chloride content in the exit stream to 10 volume percent.[1]

The amount of inerts which have to be released from a particular system is the primary controlling factor of vinyl chloride emissions. Because the

---

[1/] Dupont Trademark

ratio of vinyl chloride to inerts is constant for a set of condenser conditions, the vinyl chloride emission is dependent on the amount of inerts in the system. A vent condenser would emit a stream of 50 percent vinyl chloride if it operated at 4.4 atmospheres and 7°C (45°F). The 50 percent vinyl chloride content is constant for that condenser. By reducing the volume of inerts the volume of vinyl chloride emitted is reduced. The quantity of inerts in the recovery system is a limiting factor to the effectiveness of control by refrigeration.

Currently, refrigeration is extensively used in monomer recovery systems in polyvinyl chloride plants. At least 25 plants report using such systems; most were installed for economic reasons.[6] One producer claims that vinyl acetate is not desirable in condenser systems because of the material's conversion to acetic acid. The corrosive nature of the acid prompts the producer to "by-pass" the recovery system when copolymers of vinyl acetate and vinyl chloride are being vented.[2]

Both ethylene dichloride-vinyl chloride and polyvinyl chloride producers report the use of refrigerated vent condensers on monomer transfer operations.[3,4] It is also possible to apply refrigeration to ethylene dichloride and vinyl chloride distillation columns in ethylene dichloride-vinyl chloride plants.

In summary, refrigeration is not the most effective means of controlling emissions but can be used in conjunction with carbon adsorption and solvent absorption to reduce the capital and operating costs of these devices.[5] For streams in polyvinyl chloride and ethylene dichloride-vinyl chloride plants, well designed refrigeration units can reduce the polyvinyl chloride concentration in the gas stream from 500,000 to 100,000 ppm. These figures are based on equilibrium data for vinyl chloride in a vent stream.[1]

References for Refrigeration

1. "Equilibrium Concentration of Vinyl Chloride in Vent Gas," submitted by B. F. Goodrich Chemical Company.
2. Kleeberg, Charles F., EPA, Trip Report, "Polyvinyl Chloride Production at Firestone Plastics Company in Pottstown, Pennsylvania," September 23, 1974.
3. Letter with attachments from C. J. Kleinert, Firestone Plastics Company, to Don R. Goodwin, EPA, November 8, 1974.
4. Letter with attachments from R. H. Gerlach, Conoco Chemicals, to Don R. Goodwin, EPA, June 7, 1974.
5. Letter with attachments from W. P. Anderson, Tenneco Chemical Company, to Don R. Goodwin, EPA, October 18, 1974.
6. "In-depth Study of Polyvinyl Chloride Production," draft document prepared for the Environmental Protection Agency by Houdry Division of Air Products and Chemicals, December 6, 1974.

4.5 CONTROL OF FUGITIVE EMISSIONS

Fugitive emissions as described here include emissions that occur from pressure relief valves, pumps, compressors and agitator seals, from loading and unloading monomer, valve stems, flanges and sampling for laboratory analysis.

In an average polyvinyl chloride plant there may be as many as 600 points at which there is a significant possibility of leakage. As previously explained in chapter 3, these fugitive or unaccountable losses represent the most significant source of emissions in polyvinyl chloride plants. The techniques that are discussed below to reduce fugitive emissions can be applied to both ethylene dichloride-vinyl chloride and polyvinyl chloride plants.

Rapid detection of a leak so that it can be quickly repaired is an important facet of reducing fugitive emissions. Large vinyl chloride leaks can be visually detected by the frosting which occurs at the discharge because of the cooling effect of gas expansion or by the odor of vinyl chloride. Small leaks can be detected quickly by several methods. A fixed multipoint gas chromatograph, aralyzer and recorder can be used to periodically sample the vinyl chloride content of the ambient plant air at as many as 100 points within a plant.[1] The recorder can be fitted with an alarm to alert the operator of high vinyl chloride levels. When a high level is detected in a specific section of the plant the exact location of the leak can be determined by the use of a portable flame ionization type hydrocarbon sensing device (or sniffer). Although this instrument may respond to hydrocarbons other than vinyl chloride, it is adequate for this job. After the leak has been found it can be promptly repaired.

A second method of detecting small leaks (which can be used in conjunction with the method outlined above) is to check each possible leak point with a portable detector on a regular basis. Each potential leak point would be assigned a number and the vinyl chloride (or hydrocarbon) level at that point recorded on a routine basis. After a period of time it will be possible to tell from the recorded levels which pieces of equipment are leak prone. These may require special maintenance or replacement, as appropriate.[2,3]

A third method of leak prevention that can be used is to hydrostatically test piping, flanges, vessels, manholes, and other process equipment after construction, maintenance or inspection.[4] All three of the methods above are now in use in some polyvinyl chloride and ethylene dichloride-vinyl chloride plants.

Certain equipment in ethylene dichloride-vinyl chloride and polyvinyl chloride plants can be modified or changed to prevent vinyl chloride loss. Single mechanical seals are presently used on most vinyl chloride pumps today. The seal faces on single seal pumps are lubricated by a slight outward flow of vinyl chloride between the stationary and rotary faces. This flow can be eliminated by using a double seal pump in which an environmentally acceptable fluid such as ethylene dichloride is maintained, at a pressure greater than exists in the pump, between the two seals. Any leakage at the vinyl chloride face is into the pump, not out of the pump.

The loss from mechanical rotary seals can also be eliminated by using completely enclosed or "canned" pumps. There are no seals in these pumps and the pumped fluid circulates through the motor itself and lubricates the motor and pump bearings. Pumps with magnet to magnet drive and no seals may be even more suitable.

Pumps with reciprocating shafts can be equipped with double outboard seals with the chamber between the two seals vented and controlled.

Every flanged pipe joint is a potential leak source and welded connections

can be used when possible. In the past, companies have avoided welded pipe because it is more difficult to disassemble for cleaning or maintenance. This factor is of concern to ethylene dichloride-vinyl chloride and polyvinyl chloride producers as polymerization can occur in piping during upset conditions.

When a process stream or vessel containing vinyl chloride is sampled for analysis the sample flask can be purged back to the process stream rather than to the atmosphere. The sample connections are placed so that the vinyl chloride flows from the process into one end of the sample flask and from the other end of the sample flask back into the process at a second point which is at a lower pressure. Each end of the sample flask is attached to the sample point with quick-connect couplings. The flask valves and the process valves are opened to purge a fresh sample from the process stream through the flask and back to the process stream. Once the flask is purged and filled, the process valves and the flask valves are closed. The short sections of pipe between the flask and process valves can then be purged with inert gas to a monomer recovery system or to a control device.

When vinyl chloride is loaded or unloaded into or from railroad tank cars (or barges) the usual method consists of connecting a hose to the top and one to the bottom of the car. The bottom hose is used to transfer the liquid vinyl chloride, the other hose equalizes the pressure between the vapor space in the tank car and the storage tank. When any part of the loading line (hoses, valves, coupling) is disconnected the material left in that part may be lost to the atmosphere. This source of emissions can be controlled by purging with nitrogen to an incinerator, boiler, or other control device or by using the compressor system to evacuate the line.

An additional loss may occur during car filling. Most vinyl chloride producers measure the level in vinyl chloride cars with a "slip gauge." A vertical tube open at both ends is fitted thorough a packing gland in the tank car top and is "slipped" down into the car until the emission from

the top end of the tube changes from gas to liquid. The position of the bottom of the tube at this point indicates the liquid level. At least one vinyl chloride producer has reduced the emissions from this source by collecting the emissions from the top end of the "slip gauge" and recovering the vinyl chloride in a recovery system.[3] When this method is used a sonic detector[3] or magnetic device[5] can be used to tell when liquid is flowing from the tube.

All pressure vessels in ethylene dichloride-vinyl chloride and polyvinyl chloride plants must be equipped with safety discharge valves which are designed to relieve the pressure from the vessel in case of an operating upset. Because of their design characteristics these valves are more apt to leak than gate or plug valves. Also, if the valve is unseated by over pressure, it may not reseat properly and a large leak may result. These leaks are difficult to detect because the valve discharge is usually elevated and not readily accessible for detection with a portable sniffer. This emission can be prevented by installing a rupture disk between the vessel and the safety valve with a pressure gauge between the valve and rupture disk. Any pressure buildup between the disk and the valve will indicate rupture disk failure which can then be replaced. Rupture disks used for this purpose are designed to burst at a fixed pressure. If the disk does leak the pressure gauge will indicate this and the disk can be changed before the safety valve unseats. If the rupture disk is blown out by high pressure the safety valve will reseat after the pressure has returned to a safe level and prevent the entire loss (to atmosphere) of the vessel contents.[3] Vinyl chloride emissions resulting from excessive pressure can be controlled by connecting the relief valve discharge to a flare or other control device.

This technique is being applied to large relief valves on very large polymerization reactors of a new polyvinyl chloride plant.[7]

In most suspension polyvinyl chloride plants the slurry from the reactor is screened to remove lumps. In some older plants this screening is done in an open box. If the slurry has not been well stripped there will be considerable emissions from this device (just as there are from the slurry blend tanks). Other plants use inline screens which must be disassembled for cleaning. Modern plants use an inline "delumper" which breaks up the lumps with a propeller type device. These devices do not require frequent maintenance and can be retrofitted into existing plants.

Vinyl chloride may also be lost to the air when process equipment is vented so that the equipment may be removed for maintenance or entered for inspection. It has been the practice in some plants to "valve off" or "block off" the equipment and then simply vent the vinyl chloride that is contained in the equipment between the closed or blocked valves to the atmosphere. At least one plant now has complete recovery systems which cover all major pieces of equipment.[4] Before the equipment is opened it is attached to a monomer recovery system, perhaps with a flexible coupling, and the vinyl chloride is blown out of or purged from the equipment. For larger equipment water or steam can be used to displace all the vinyl chloride present to the monomer recovery system.

It is difficult to estimate the emission reduction that typical polyvinyl chloride plants will be able to achieve using the methods described in this section. It is expected that fugitive emissions could be reduced by 90 percent.

Table 3-10 shows the individual fugitive emissions reported in response to the EPA section 114 request of May 30, 1974.

References for Fugitive Emission Controls

1. Kleeberg, Charles F., EPA, Trip Report, "Tenneco, Burlington, N.J., Plant Inspection," September 23, 1974, p. 3.
2. Letter with attachments from F. F. Hoy, Plant Manager, Firestone Plastics Company, Perryville, Maryland, to Don R. Goodwin, EPA, June 7, 1974.
3. Letter from R. E. Van Ingen, Manager, Manufacturing Environmental Conservation Department, Shell Oil Company, to Don R. Goodwin, EPA, December 6, 1974.
4. Letter with attachments from J. R. Mudd, Plant Manager, General Tire and Rubber Company, Ashtabula, Ohio, to Don R. Goodwin, EPA, June 17, 1974.
5. Letter from K. H. Oelfke, Jr., Manager, EDC and Derivatives, Dow Chemical, U.S.A., to Don R. Goodwin, EPA, June 12, 1974.
6. Letter with attachments from J. R. Mudd, Plant Manager, General Tire & Rubber Company, Ashtabula, Ohio, to Interested Persons, August 13, 1974.
7. Letter with attachments from W. P. Anderson Tenneco Chemical Company, to Leslie B. Evans, EPA, May 13, 1975.

4.6 RELIEF VALVE DISCHARGE

The polymerization of polyvinyl chloride usually takes place in batch reactors at a pressure of about 6.1-7.8 atmospheres. The polyvinyl chloride reactors are protected from overpressure and catastrophic rupture by safety valves or a combination of rupture discs and safety valves. Occasionally vinyl chloride will be vented through the reactor safety valves because of operator error, power failure or equipment failure. Safety discharges tend to occur more often in older plants which is probably due to the larger number of smaller reactors and the less sophisticated instrumentation found in the older plants. Information submitted to EPA indicates the number of reactor discharges per plant varies between one and twenty per year. Several plants reported less than one discharge per year. The amount of discharge is usually not measured accurately but typically 2260 kg (5,000 pounds) of vinyl chloride might be vented in five to ten minutes.[1]

Potential problems can be quickly detected by instrumenting each reactor with temperature or pressure alarms to alert the operator to upset conditions. Once alerted the operator can use the following procedures to eliminate pressure relief valve discharges.

A gasholder can be installed that is designed to hold all the vinyl chloride contained in an entire reactor batch, then the batch can be vented to the gasholder either automatically or manually. When an emergency power outage occurs there is a danger of multiple reactor discharges and the gasholder may not be large enough to accept all the vinyl chloride vented. In such cases a chemical solution which inhibits the polymerization reaction (referred to in the industry as shortstop) can be injected into the reactor to stop the reaction and prevent

pressure build-up. The inhibitor solution system can be built in so that it can be operated instantaneously, either automatically or manually. Reactor emissions during power outages can be prevented by equipping each reactor with a hydraulic system to enable the operator to manually inject the shortstop material. In addition, an emergency electrical generator can be used to keep essential equipment in operation until power is restored and will permit the plant to be shut down in a safe and orderly manner.

A combination of proper instrumentation to detect upset conditions, gasholder, and automatic inhibitor solution system can eliminate vinyl chloride lost from this source in existing plants.

Discharges similar to the reactor safety valve loss can occur elsewhere in ethylene dichloride-vinyl chloride and polyvinyl chloride plants. Pressure vessels in general are equipped with such safety features. Some of the control techniques described above can be used on all pressure vessels.

References for Safety Valve Discharge

1. Preliminary Report with attachments, from M. E. Eisenhour, Union Carbide Corporation, Texas City, Texas, to U.S. EPA, June 7, 1974.

4.7 GASHOLDER AND PURGE WATER SYSTEM

A gasholder and reactor purge water system can be used together to significantly reduce emissions from suspension and dispersion polyvinyl chloride plants. Bulk polyvinyl chloride plants operate with dry, water free, reactors; and if water were introduced into these reactors it would be necessary to install elaborate drying equipment. For this reason other control systems are more appropriate for these plants. Bulk plants can reduce reactor entry purge emissions by reducing reactor openings, by using a better vacuum to remove more of the vinyl chloride before the purge or by using add-on control equipment on the purge exit. Solution polyvinyl chloride plants are continuous and do not use batch reactors so the reactor purge would not be applicable. However, both bulk and solution plants could use gasholders to reduce both fugitive and safety valve discharge emissions.

A gasholder and reactor purge water system will reduce emissions from reactor openings, from reactor safety valve discharges, from the vinyl chloride recovery system, and from fugitive emission sources. Although each of the devices might be used separately they are more effective and efficient in combination and they will be discussed that way here. To understand the operation of these systems it is necessary to understand a "typical" reactor operating cycle using a separate stripper equipped with refrigeration (13°C or 45°F gas exit) in the monomer recovery system, water cleaning, and an occasional tank entry for manual cleaning. See section 4.8 for a discussion of stripping, section 4.4 for a discussion of the refrigerated vent used on a typical plant, and section 4.9 for a discussion of water cleaning.

The cycle starts with a clean empty reactor which is full of air. The amount of water that is required for the polymerization reaction is added to the reactor and a steam jet or vacuum pump is used to remove some of the air. The amount of air left depends on the absolute pressure after evacuation.

The vinyl chloride and other chemicals are then added to the reactor and the reaction takes place for about six hours. At the completion of the reaction step the batch is discharged to a second vessel called a dump tank or stripper. In the stripper the unreacted gaseous vinyl chloride is removed by heat and vacuum and compressed and cooled to a liquid in the vinyl chloride recovery system. The air which was initially left in the reactor before the vinyl chloride addition step (plus any air present in the stripper when the batch is dropped) cannot be condensed and must be vented from the system through the vent condenser to prevent system overpressure. The refrigerated vent condenser removes some of the vinyl chloride from the air stream before it is vented but the ratio of air to vinyl chloride is determined by temperature and pressure at the exit of the condenser. A typical chilled water vent condenser operating at 13°C (45°F) exit gas temperature and 4.4 atmospheres will emit a gas stream containing 50 volume percent air. (See 4.4 Refrigeration.) The vinyl chloride emissions are therefore directly related to the total gas volume that must be vented from the system in order to prevent the excessive pressure that results from inert gas accumulation. The air that is present in the reactor after cleaning ends up in the monomer recovery system and therefore increases the volume of gas that must be vented from the system.

After the batch is discharged from the reactor to the stripper the reactor remains full of vinyl chloride gas. In a typical plant some of this

vinyl chloride is recovered by a compressor which discharges to the vinyl chloride recovery system. The amount of vinyl chloride gas left in the reactor depends on the absolute pressure after evacuation. Typical practice is to reduce the pressure to 127 millimeters (5 inches) of mercury absolute which will leave approximately 10 kg (22 pounds) of vinyl chloride in a 18,900 liters (5000 gallon) reactor. A vent valve is opened, the vacuum relieved, and the vinyl chloride remaining in the reactor is discharged to the atmosphere by steam jet or blower. The quantity of vinyl chloride remaining in the reactor after evacuation is therefore normally discharged or purged to the atmosphere. This emission is called the reactor opening loss and the average emissions from this source, 0.46 kg VCM/100 kg (lb VCM/100 lb) PVC produced, is shown in table 3-5 for suspension plants. The manhole is opened and the reactor washed with water. If it is necessary to enter the reactor for cleaning, additional air purging may be conducted to remove any remaining traces of vinyl chloride. The reactor manhole is closed and the reaction cycle is complete. Solution plants use a continuous process and do not have an equivalent emission.

A gasholder and purge water system controls emissions from the typical plant cycle described above by reducing the reactor opening loss because all the vinyl chloride left in the reactor after the batch is discharged is displaced (or purged) to the gasholder. In addition, the emission from the vent condenser is reduced because there is less air left in the system before the reactor is charged. This air, as described above, increases the volume of gas that must be vented from the monomer recovery system. These points are discussed below.

When a gasholder and purge water system is used to control emissions from the reactor, the cycle starts with a clean empty reactor which is

full of air. The air is displaced to the atmosphere by filling the reactor completely full of water. The water is then used to pressurize the reactor and all flanges are checked for leaks. The reactor manhole flange is a frequent source of leaks in most plants and this source of fugitive emissions is also eliminated when this technique is used.

Vinyl chloride vapor is now used to displace the water from the reactor and no air is permitted to enter. The bottom reactor valve is closed, the rest of the vinyl chloride, the water, and the other chemicals are charged and the reaction takes place. After the reaction is complete the batch is discharged to a stripper. As previously explained, because there was no air left in the reactor before the reaction began the monomer recovery system emissions will be reduced since there will be less air to be vented through the vent condenser. The average vent condenser loss reported by all suspension plants was 0.48 kg/100 kg (lb VCM/100 lb) PVC produced. (See chapter 3, table 3-5). The one plant using a gasholder and purge water system reports a loss from this source of 0.02 kg VCM/100 kg (lb VCM/100 lb) PVC produced.[1]

The reactor which contains (mostly) vinyl chloride vapor after the batch has been discharged is now completely filled with hot water to displace or purge all of the residual vinyl chloride vapors from the reactor to the gasholder. This reduces the reactor purge emission which occurs at this place in the cycle. The one plant using a gasholder and purge water system reports a loss from this source of 0.16 kg (0.35 pounds) of vinyl chloride per reactor opening for a 15,100 liter (4000 gallon) reactor.[2] This is equivalent to 0.2 kg (0.44 pounds) of vinyl chloride for a 18,900 liter (5000 gallon) reactor.

The reactor manhole is opened as the water is drained from the reactor.

Air is pulled into the reactor so the small amount of vinyl chloride remaining is not emitted to the room. The reactor is then cleaned as required. If reactor entry is required the small amount of vinyl chloride remaining in the reactor is vented to atmosphere with a flexible ventilation hose that is dropped into the reactor through the open manhole.

The gasholder also helps to prevent reactor safety valve discharges which sometimes occur because of operator error or equipment malfunction. When the operator sees that the polymerization reaction is proceeding too fast and the pressure is above normal he can manually vent the reactor to the gasholder. The gasholder can be sized to hold all the vinyl chloride present in one complete batch. A more complete description of this system is given in Section 4.6, Safety Valve Discharges.

The gasholder also acts as a surge tank between the plant and the vinyl chloride recovery system. The gasholder can accept and hold a short term high volume surge of vinyl chloride which would normally overload the recovery system.

The gasholder also is used to prevent fugitive emissions from other sources in the plant.[2] The relief valves from compressors can be vented to the holder as can rupture disks and relief valves for certain pressure vessels other than the reactors. The gasholder can also be used to vent tanks, pumps, lines, weigh scales, condensers, knockout pots, etc., before they are opened for maintenance or during equipment inspection. This use is covered in Section 4.5, Fugitive Emissions.

There are disadvantages to the gasholder purge water system. The cycle time per batch must be increased to allow time for the reactor water purges. A gasholder sized to hold the charge from a typical 18,900 liter (5000 gallon) reactor will have a capacity of 2630 cubic meters (93,000 cubic feet) which will require a relatively large plot of land.

References for Gasholder and Purge Water System

1. Letter with attachments from J. R. Mudd, Plant Manager, General Tire and Rubber Company, Ashtabula, Ohio, to Don R. Goodwin, EPA, June 17, 1974.

2. Letter with attachments from J. R. Mudd, Plant Manager, General Tire & Rubber Company, Ashtabula, Ohio, to Don R. Goodwin, EPA, October 29, 1974.

4.8 IMPROVED STRIPPING

Slurry Stripping

After the completion of polymerization in a typical suspension, dispersion, or bulk process, approximately 10 to 15 percent of the original vinyl chloride monomer charge remains unreacted.[1] This vinyl chloride is present in the vapor space in the top of the reactor, is dissolved in the water (in suspension and dispersion processes) or is dissolved (or trapped in) the polyvinyl chloride granule itself. In the past, some part of this vinyl chloride has usually been recovered and recycled to the process, but the amount recovered was based on economic considerations alone. At the end of the polymerization step most of the gaseous vinyl chloride present in the vapor space can be removed simply by venting the reactor to a recovery system. The vinyl chloride remaining in the water or in the polyvinyl chloride granules can be recovered by a process known as stripping. In this step heat and vacuum are used to drive off the volatile vinyl chloride from the reactor contents. The vinyl chloride that is driven off is then sent to the monomer recovery system where it is condensed to liquid by a combination of pressure and cooling and returned to vinyl chloride storage for reuse.

Most of the residual vinyl chloride trapped in the polyvinyl chloride particle is emitted to the air as the granules move through the process from the reactor to the slurry blend tank, centrifuge, dryer, and storage. Although technology exists to control the emissions from these individual points, and this technology is discussed in other sections of this chapter, an alternate method of control would be the reduction of the residual vinyl chloride content in the resin through optimization of the stripper operation. This will reduce substantially the emissions from the slurry blend tank, the centrifuge, the dryer and the bulk storage silos. The effectiveness of

stripping depends on the type of resin and the design of the stripping system. Resin stripping also enables the polyvinyl chloride producer to recover and recycle some of the vinyl chloride that would otherwise be emitted to the atmosphere.

The amount of vinyl chloride remaining in the polyvinyl chloride particles after the stripping operation depends primarily on the particle size and porosity, the temperature and vacuum used, and the retention time in the stripper. If the particles formed in the reactor are small and porous and a higher temperature is used for stripping the reduction in the residual monomer of the resin will be greater.

The equipment that is presently used for stripping is shown in the flow diagram figure 3-1. In this diagram the stripper is shown as a separate vessel, which is the usual case, although in some plants the stripping step is carried out in the reactor under vacuum. In either case the vacuum is generally applied with a reciprocating or water seal compressor which also compresses the "stripped" vinyl chloride to a liquid in a series of after-coolers and condensers in the monomer recovery system. The liquid vinyl chloride is returned to the system and reused.

As previously explained, most of the vinyl chloride that is retained in the resin after leaving the reactor or stripper will eventually be emitted to the atmosphere from the slurry blend tank, the centrifuge, dryer, or storage silos. However the specific quantity of vinyl chloride that will be emitted from each one of these processing steps will vary with the retention time and temperature maintained in the slurry blend tank, dryer, and storage silo and with the particular type of resin. These factors vary considerably from plant to plant and within a given plant. As a result it is more practical to consider the total emissions from these sources rather than

the individual emissions from each source.

There is considerable variation in the efficiency of stripping at the various plants within the industry. In fact a few plants do not recover any of the vinyl chloride remaining at the end of the polymerization step and others only recover that part that can be recovered without the use of vacuum (as of May 1, 1975). Most companies now have development work under way to improve the efficiency of their stripping operations. Increasing the temperature, reducing the pressure (increasing vacuum) and increasing the duration of the stripping operation (residence time) favor removal of the vinyl chloride from the resin. Increasing the temperature is the most effective technique for reducing the vinyl chloride content of the resin. This method uses steam which may be applied to the outside jacket of the polymerization kettle or introduced directly into the bottom of the stripper. The disadvantage of this method is that some resins are sensitive to heat and there may be product degradation. Increasing the time of the stripping step is also effective in reducing the vinyl chloride content. This also requires additional steam and there may be a loss of production if additional stripper capacity is not provided to make up for the time lost during stripping.

Typically an "improved" stripping operation would take place at 77°C (170°F) at 392-458 millimeters (15-18 inches) of mercury vacuum absolute for 10 to 20 minutes.[2,3] Some manufacturers are also investigating the possibility of changing the resin recipe and/or reaction conditions to produce a resin whose properties are more amenable to monomer removal by stripping. When this method is used it may be necessary to test the modified resin in the compounding and fabricating equipment to make sure that no significant changes have occurred in the resin which makes it unsuitable for use. Whatever method of reducing the monomer content of the resin is used, it is

likely that procedures for each resin grade will have to be developed separately. Some polyvinyl chloride producers are phasing out grades of resin that are very difficult to strip well.

Information presently available indicates that copolymer suspension resins and dispersion resins are more difficult to strip than other resin types.[4,5,6,9,10] Copolymer suspension resins are apt to be more difficult to strip because these resins form granules which are less porous which make it more difficult for the vinyl chloride to escape from the particle. Dispersion resins are difficult to strip because the heat required for the stripping step in some way destroys the soap film separating the resin particles causing the particles to coagulate. Dispersion resins have commercial value because of their small particle size. Coagulation destroys this property.

The figures for "Uncontrolled Emissions" in table 4-3 show the average emissions from suspension plants reported in reply to the EPA section 114 request of May 30, 1974. The uncontrolled average emissions from all four types of polyvinyl chloride processes are shown in tables 3-6, 3-7, 3-8 and 3-9. For the most part these data represent economic recovery levels rather than optimum pollution control levels.

The result of improved stripping on the residual vinyl chloride content of the four types of polyvinyl chloride resins is presented in section 4.11. Although additional development work will be required to perfect improved stripping, the data obtained so far indicate that all types of resins can be stripped to 400 ppm or lower except dispersion resins. The data indicate that 2000 ppm represents the current lower limit of the technology for dispersion resins. The figures for "Achievable Emission Levels" in table 4-3 show the effect of this improved stripping on the emissions from an average suspension plant. If

improved stripping is not possible the operators have the options of installing either carbon adsorbers or incinerators on the slurry blend tanks, centrifuge, dryer, and storage silos. See chapter 4, sections 4.1 and 4.2.

Commercial stripping in the United States is presently done batch-wise from the stripper kettle or from the reactor itself. Other stripping methods are under development which may increase the efficiency of the stripping or decrease the cost of the stripping step.[7] One of the most promising methods would be the use of countercurrent multistage column stripping. A diagram of this process is given in figure 4-1. The rate of vinyl chloride stripping is proportional to the difference between the amount of vinyl chloride in the resin and the amount of vinyl chloride in the water surrounding the resin particle. The primary advantage of multistage contacting is that this driving force is maximized because the resin leaving the column is contacted with water which contains no vinyl chloride.[9] In batch stripping the resin is surrounded by water that is partly saturated with vinyl chloride during most of the stripping step.

If improved stripping is used to control emissions from the slurry blend tank, centrifuge, dryer, and storage silo (rather than individual control devices on each source) then the vinyl chloride content of the final product resin should be less. This is an advantage to compounders and fabricators because it reduces the amount of vinyl chloride which can be released during processing. If the average stripped suspension resin has a vinyl chloride content of 400 ppm out of the stripper and 50 ppm out of the dryer then the maximum emission factor possible during storage, compounding and fabrication is 0.005 kg VCM/100 kg (lb VCM/100 lb) PVC.

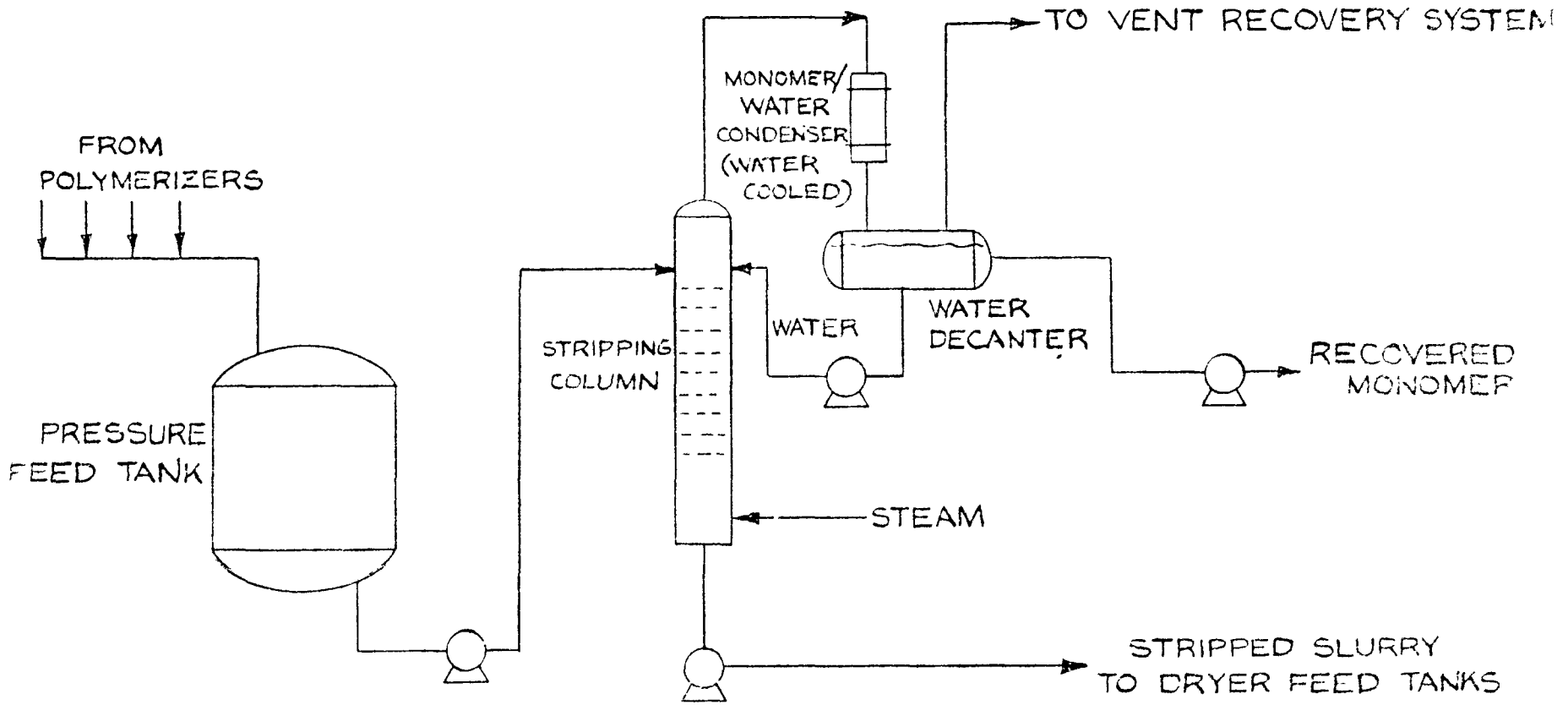

Figure 4-1. COUNTER CURRENT STRIPPING COLUMN

In summary, improved stripping is a preferred method of emission control because it makes the use of other more expensive methods of control unnecessary; it recovers vinyl chloride for reuse; and it reduces the residual monomer content of the finished resin product.

References for Improved Stripping

1. Foster D. Snell, Inc., Economic Impact Studies of the Effects of Proposed OSHA Standards for Vinyl Chloride, September 27, 1974, Exhibit A-7, p. 2.
2. Letter from J. R. Mudd, Plant Manager, General Tire and Rubber Company, Ashtabula, Ohio, to Don R. Goodwin, EPA, October 29, 1974.
3. Letter from W. C. Holbrook, Manager, Environmental Control Engineering, B. F. Goodrich Chemical Company, to Don R. Goodwin, EPA, November 15, 1974.
4. Reference 3, p. 4 and 6.
5. Reference 2, p. 2.
6. Letter from W. P. Anderson, Director, Environmental Sciences, Tenneco Chemical Company, to Don R. Goodwin, EPA, October 18, 1974.
7. Reference 3, pp. 16 and 17.
8. C. D. Callihan and E. McLaughlin, Vinyl Chloride Removal from Polyvinyl Chloride, Louisiana State University, Baton Rouge, Louisiana, February 1975.
9. See tables 4-4 and 4-5.
10. Society of the Plastics Industry, "Comments on the Draft Document - "Standard Support - Environmental Impact Statement," presented at the NAPCTAC meeting, Washington, D.C., March 25, 1975.

4.9 REACTOR OPENING LOSS CONTROLS

Each time a reactor is opened for maintenance, cleaning, or inspection some vinyl chloride escapes to the atmosphere. Traditionally in polyvinyl chloride plants it has been necessary to open reactors after the completion of every reaction to clean the kettle walls of polyvinyl chloride build-up accumulated during the course of polymerization. Each reactor, or polykettle, has a hatch which is opened and entered by a worker who scrapes and washes the reactor walls with a cleaning agent. This cleaning takes place after the polyvinyl chloride slurry has been transferred to another part of the process and after most of the vinyl chloride monomer has been removed by vacuum or by displacing it to the monomer recovery system by filling the reactor with water.

The vacuum does not remove all of the monomer left in the reactor and in the polyvinyl chloride resin on the reactor walls. A blower and flexible ventilation hose are usually used to clear the reactor of this monomer after the reactor is opened. The amount of monomer emitted is dependent on the size of the reactors, the effectiveness of the vacuum, the type of resin produced, and the incidental effectiveness of other control techniques such as water purge systems or improved stripping in the polykettles themselves (see sections 4.7 and 4.8) to remove the monomer. Bulk plants can reduce emissions from this source by a more effective vacuum system relieved by an inert gas, such as nitrogen. With each successive vacuum/purge release, more vinyl chloride is removed.

It is possible to reduce the number of reactor openings and in turn reduce the monomer that escapes. High pressure water sprays could be inserted through a gland in the reactor to clean the kettle walls. This method could allow the reactors to stay closed for four to eight batches.

New plants are using a combination of recipe reformulation and reactor design to minimize scale formation. In this case, the cleaning agent is part of the reaction ingredients. New plants are claiming 80-90 batches between openings and there are plans by one plant to decrease the frequency to one opening per 200 batches.[1]

At least one plant is experimenting with circulating an organic solvent through the reactors to dissolve any solids which remain in the reactor after the batch is completed. A heated solvent such as tetrahydrofuran or ethylene dichloride is pumped into the reactor and agitated for some period of time until the solid scale is broken up and dissolved. The mixture is then distilled to separate the solvent, vinyl chloride and polyvinyl chloride. The solids are reclaimed or discarded, the monomer is recovered and the solvent is recycled. The frequency of opening the reactors is reduced to one opening per 40-60 batches with this system.[2]

There is some economic incentive to installing solvent cleaning systems in order to reduce the personnel requirements for reactor cleaning. Recent Occupational Safety and Health Administration's (OSHA) regulations concerning the safety of personnel involved in cleaning the reactors has given further impetus to utilization of solvent cleaning. The more significant benefits of this technique toward a reduction of air pollution have been outlined by a company which is currently experimenting with the method in its 20-year old polyvinyl chloride plant to eliminate reactor openings with the exception of equipment malfunction. These benefits are:

a. Eliminates fugitive vinyl chloride leaks due to opening the poly-kettle.

b. Eliminates emissions from handling, in the open atmosphere, poly-kettle cleanings and scrapings, as these typically contain high

levels of residual vinyl chloride.

c. Polykettle openings and closings can be eliminated and therefore the polykettles can be made tighter and more leak proof using permanent opening and closing fittings.[2]

There are, however, some problems with reformulation and solvent cleaning. The method of reformulation reported by two new polyvinyl chloride plants may be practical only when the reactor is designed to accomodate the new recipes. The high pH of the new recipes require stainless steel reactors.[3] Without extensive retrofitting, older plants may be unable to change recipes.

There are some emissions of the solvent used in the solvent cleaning technique during regeneration and eventual reactor openings. The solvents used are pollutants in themselves and some are expensive. Losses have not been quantified but have been estimated at 4.56 kg (10 lb) per reactor cleaning. Nearly all of the losses are lost to the plants inprocess wastewater.[3]

The advantage of the solvent cleaning system is that it reduces the frequency the reactor has to be opened for cleaning which in turn reduces the vinyl chloride emissions. If the frequency of purges is reduced from one every batch to one every 80 batches, then the controlled emissions is 1/80 of the uncontrolled. This would mean a reduction from .14 to 0.0018 kg VCM/100 kg (lb VCM/100 lb) PVC produced.

The indirect benefit of solvent cleaning is that as reactor entries are decreased, the amount of inerts in the recovery system decrease which decreases the vinyl chloride emissions from the noncondensable vent purge in the monomer recovery system. (See section 4.4 of chapter 4). It is difficult to quantify this reduction as inerts can enter the recovery system from a number of other sources.

References for Reactor Opening Loss Controls

1. Letter with attachments from Ralph Ferrell, Conoco Chemical Co., to Don R. Goodwin, EPA, November 19, 1974.
2. Letter with attachments from J. R. Mudd, General Tire and Rubber Company to Don R. Goodwin, EPA, June 17, 1974.
3. Conversation with H. E. Jewett, General Tire and Rubber Company, Ashtabula, Ohio, February 20, 1975.

4.10 EMISSIONS AND CONTROL TECHNIQUES FOR INPROCESS WASTEWATER

Vinyl chloride can be contained in the inprocess wastewater from a polyvinyl chloride plant or an ethylene dichloride-vinyl chloride plant. Based on the solubility of vinyl chloride in water at 38°C (100°F) and one atmosphere, the inprocess wastewater entering the treatment ponds from either plant can contain as much as 1.33 milligrams of vinyl chloride per gram of water (1.33 lb VCM/1000 lb water).[1]

In a polyvinyl chloride plant, the sources of the inprocess wastewater are the reactors, centrifuges, water seals in the compressors, floor and sewer drains, vinyl chloride recovery system, and decanter blowdown. Vinyl chloride may be present in any of these wastewater streams. The average wastewater flow rate from a polyvinyl chloride plant is about 15.3 liters/kg (1.84 gallons per pound) of product.[2,3,4,5,6,8] The actual vinyl chloride content of the wastewater stream entering the treatment ponds is reportedly between 0.0005 and 0.05 milligram per gram of water (lb/1000 lb)[4,9] with an average of about 0.016 milligram per gram (lb/1000 lb) of water. The discharge from the centrifuges accounts for about 56 percent of the vinyl chloride in the total in-process wastewater. Three plants report that the vinyl chloride content of the effluent leaving the treatment ponds is zero (nondetectable).[4,9] One plant reports finding 21.5 ppm vinyl chloride in untreated wastewater and 0 ppm in treated effluent. It has not been determined what causes this reduction in the vinyl chloride content during treatment. These plants have biological and aeration(mechanical or natural treatment ponds. There are three possibilities to cause this reduction: 1) the vinyl chloride is biologically or chemically reduced, 2) the vinyl chloride is absorbed in the resin which settles out, or 3) the vinyl chloride is released to the atmosphere during aeration. It is assumed, however, that all the vinyl chloride in the wastewater is released to the atmosphere in the

treatment ponds. Therefore, based on an average of 0.016 milligrams of vinyl chloride per gram of water discharge (lb/1000 lb water) it is estimated that 0.025 kilograms of vinyl chloride are released from the treatment ponds at a typical polyvinyl chloride plant per 100 kilograms of product (0.025 lb/100 lb). However, based on the potential maximum vinyl chloride content of 1.33 milligrams per gram of water, 2.04 kg of vinyl chloride could be released per 100 kg product.

In a balanced ethylene dichloride-vinyl chloride plant, the sources of the wastewater are the scrubbing systems for hydrogen chloride separation from crude EDC, by-product washing from certain purification processes, and miscellaneous water wash floor drains. The inprocess wastewater flow rate is about 2.08 liters per kilogram (0.25 gallons per pound) of product.[10,11] The actual vinyl chloride content of this wastewater stream entering the treatment pond is reportedly about 0.0034 milligram per gram of water (0.0007 kg per 100 kg of product).[10] The wastewater is stripped prior to entering the ponds to recover organics. The vinyl chloride content of the effluent leaving the treatment ponds is reportedly zero (nondetectable).[10] Wastewater treatment is similar to that in a polyvinyl chloride plant. As with the polyvinyl chloride plants, it is assumed that all the vinyl chloride in the wastewater is released to the atmosphere resulting in an emission rate of about 0.0007 kg of vinyl chloride per 100 kg of product. (.0007 lb/100 lb). However, based on the potential maximum vinyl chloride content of 1.33 milligrams per gram of water, 0.28 kg of vinyl chloride could be released per 100 kg of product.

Based on solubility data[1], it is estimated that essentially all the vinyl chloride in the wastewater would be released to the atmosphere. In the presence of a large amount of pure air, the partial pressure of vinyl chloride would be extremely small causing the solubility of vinyl chloride in the water to be

essentially zero. It appears from reported data[4,9] that the retention time of an wastewater treatment system is sufficient to allow all the vinyl chloride to be released prior to discharge. This may be due to evaporation. Vinyl chloride, with a density of 0.9834 at -20°C, is expected to rise to the surface of the water.

This emission source can be controlled by stripping out the vinyl chloride in a stripping column prior to the treatment ponds. The vent gases from the stripper containing the stripped vinyl chloride can then be returned to the process or treated in the plant vinyl chloride control system. The principal way of stripping is steam stripping. A high temperature of the inprocess wastewater will facilitate stripping, since less steam will be required for heating the water to the boiling point. Stripping can be performed in multistage (multiple trays) columns with a large countercurrent flow of steam, or in batch tanks. Countercurrent operation gives an advantage because the partial pressure of vinyl chloride in the steam entering the bottom of the column is zero. This establishes the maximum driving force for vinyl chloride removal. In a batch operation, steam could be sparged into the stripper providing the heat and agitation necessary for vinyl chloride removal. In either case, mixing is essential for good stripping.

In summary, according to the literature it has been demonstrated[1,12] that vinyl chloride monomer concentrations in wastewater can be reduced by increasing vacuum and temperature. With the proper vacuum and temperature any given vinyl chloride concentration can be achieved using the stripping techniques described above.

References

1. The Solubility of Vinyl Chloride in Polyvinyl Chloride, Berens, A. R. , A.C.S. Polymer Reprints, 1974, 2, p. 197.

2. Personal communication with Dave Francke, Air Products and Chemicals, Inc., Escambia, Florida, November 25, 1974.

3. Personal communication with Bob Luckan, Air Products and Chemicals, Inc., Calvert City, Kentucky, November 25, 1974.

4. Letter with attachments from R. N. Wheeler, Jr., Union Carbide Corporation to Don R. Goodwin, EPA, June 26, 1974.

5. Personal communication with Doug McWhorter, B. F. Goodrich, January 28, 1975.

6. Personal communication with Jay Harpring, Continental Oil Company, January 30, 1975.

7. Personal communication with Joe Mudd, General Tire, January 30, 1975.

8. Letter with attachments from John T. Barr, Air Products and Chemicals, Inc., to Leslie B. Evans, EPA, June 24, 1974.

9. Letter from R. E. Van Ingen, Shell Oil Company, to Leslie B. Evans, EPA, January 31, 1975.

10. Development Document for Effluent Limitation Guidelines and New Source Performance Standards for the Major Organic Product Segment of the Organic Chemicals Manufacturing, EPA, April 1974.

11. Robert Bellamy (Houdry Division of Air Products and Chemicals). Telephone conversation with John Christiano (EPA) on February 6, 1975.

12. Vinyl Chloride Removal from Polyvinyl Chloride, Callihan, C. D., and McLaughlin, E., Report for EPA, July 1975, p. 45.

4.11 PARTICULATE CONTROL

Polyvinyl chloride particulate emissions are essentially the product resin from polyvinyl chloride plants which is lost from process equipment, such as dryers, storage bins and silos, bulk loading operations and baggers, and from resin transfer equipment. Polyvinyl chloride product is air conveyed through dryers and collected in fabric filters or centrifugal separators. The resin is then air conveyed to silos or bagging operations. Particulate can be emitted with the air exhaust from any of these points.

Particulate (resin) collection devices used in the industry include centrifugal separators and fabric filters. These devices are used either separately, in stages, or in combination and are used primarily to separate the resin from conveying or drying air. The efficiency of the devices corresponds to economic recovery levels and is not necessarily designed for maximum particulate reduction. Table 4-11 lists the different devices used on each facility and subcategorizes the facility where necessary. For instance, it can be seen that four types of dryers are used at polyvinyl chloride plants. Rotary, flash, and fluidized bed dryers are used in the suspension process and spray dryers are used in the dispersion process. The drying chamber in the spray dryers is shaped like a centrifugal separator and serves as a primary product collector to remove larger size resin particles. Therefore, the dryer exhaust from the dispersion process contains very fine particles, which makes it necessary to treat the exhaust gases from spray dryers with fabric filters. Fabric filters have also been utilized to treat the exhaust gases from storage bins, bulkloading operations, and bagging machines.

The control devices used on these sources of particulate emissions are discussed below. Particulate emissions from these devices for each

facility are presented in Table 4-11. Design collection efficiencies of those collectors are generally high in order to minimize loss of product. Reported outlet loadings indicate that these collectors generally operate near their design efficiencies.

The particulate (resin) being collected is generally about 44 microns in size. This large size makes the resin relatively easy to collect in either centrifugal separator or fabric filter. A control device designed for high collection efficiency (99.9 percent) can achieve emission levels of less than 0.0001 kg/kg of product. [8 kg/hr (17.6 lb/hr) from a 68 million kg product/year plant (150 million lb product/year plant)].

4.11.1 Centrifugal Separators Applied in the Polyvinyl Chloride Industry

Centrifugal separators utilize centrifugal and gravitational forces for separation of the resins from the conveying air. The resin laden air enters the separator tangentially which subjects the resins to the separating forces. The centrifugal force drives the dust particles to the collector wall, gravitation drives the concentrated resin downward to the cone outlet, and the resin is discharged into a collection hopper while the cleaned gas flows upward in an inner vortex to the gas outlet tube.

The separators utilized in the industry may be installed in single or multiple arrangements in parallel or in series. Separators are generally suitable for separating solid particles in size ranging from 3 to 200 microns. The size of the resins being collected except from a spray dryer is generally over 44 microns. Based on industrial responses to the May 30, 1974, letter transmitted from EPA to the management of companies producing polyvinyl chloride, under the authority of section 114 of the Clean Air Act, collection efficiencies of the centrifugal separator used in the industry

range from 80 to greater than 99 percent. Because the size of the resin in a spray dryer exhaust is less than 10 microns, centrifugal separators are not used since their collection efficiency at this particle size range would not be sufficient for economic recovery of the product.

4.11.2 Fabric Filters Applied to the Polyvinyl Chloride Industry

Fabric filters, also referred to as baghouses or bag filters, are frequently used in the polyvinyl chloride industry. The most common type used on dryers is a closed suction or indirect draft type (fan on the outlet). Socks (single bag filters) are generally used on product silos and bins.

Fabric filters currently in use have air to cloth ratios which vary between 5 and 45 actual cubic meters per minute (acmm) per square meter (5 and 45 actual cubic feet per minute [acfm] per square foot) of cloth area. Outlet loadings resulting from use of fabric filters are generally less than 0.12 g/DSCM. Based on the aforementioned industrial responses to the May 30, 1974, section 114 request, data show that collection efficiencies of the fabric filters used in the industry are generally about 97.5 to 99.9 percent. Fabrics of many different materials have been used. Cleaning of the bags may be done by either reverse air, mechanical shaking, or in the case of socks, just allowing the bag to collapse when not in use. The pressure drop across a fabric filter (excluding the sock type) is relatively high, 51 to 457 mm Hg (2 to 18 inches of water).

4.12 DATA DEMONSTRATING CAPABILITY OF SELECTED CONTROL TECHNIQUES

The purpose of this section is to present the available data which describe the status of control techniques discussed previously. These data come from emission tests, control equipment vendor studies and pilot studies by polyvinyl chloride producers. The data will be outlined and a discussion will be made of important points where necessary.

4.12.1 Stripping

In response to a request made under section 114 of the Clean Air Act, a number of producers gave information on stripping dispersion and suspension resins in April 1975. Table 4-5 shows each plant's April, 1975 and projected status of dispersion resin stripping. Table 4-6 shows similar information for the current stripping success of several producers making suspension resins.

Data shown in sections 4.12.1.1 through 4.12.1.3 were given to EPA in the Fall of 1974 in response to section 114 requests. They show the stripping conditions which were used at that time to achieve certain residual vinyl chloride levels in the polymer resin.

4.12.1.1 Company A[1]-

The values below were obtained by direct steam stripping at 77°C (170°F) at 380 to 457 millimeters (15 to 18") of mercury vacuum for 10-20 minutes.

Suspension Resins					
ASTM[1/] Cell Class	% Prod.	PPM VCM into stripper	Avg. ppm VCM out of stripper (dry basis)	Avg. ppm out of dryer	Emission factor kg VCM/ 100 kg PVC
GP1-26250	5	(40-60) x 10^3	3,050	308	0.27
GP2-16340	5	(40-60) x 10^3	2,050	162	0.18
GP3-15340	13	(50-70) x 10^3	1,200	104	0.09
GP4-15340	35	(60-90) x 10^3	1,050	95	0.09
GP6-15343	24	(90-120) x 10^3	950	82	0.08
GP1-14443	0	(80-100) x 10^3	600[2/]	25	0.06
GP2-14443	1	(80-100) x 10^3	550	16	0.06
GP3-15433	1	(80-100) x 10^3	500	21	0.05
GP5-15433	5	(90-110) x 10^3	450	15	0.05
GP6-15433	9	(100-140) x 10^3	450	18	0.05
Copolymers					
C11-8500	1	(40-60) x 10^3	2,100	280	0.18
C11-3500	1	(90-110) x 10^3	1,000	95	0.09

[1/]ASTM cell class is standard definition of resin. ASTM-D-1755
[2/]Based on limited data (Less than three samples).

This company plans to install secondary strippers to further reduce the residual vinyl chloride content shown above by increasing the stripping temperature to as high as 85°C (185°F) and the residence time to one hour.

4.12.1.2 Company B[2]-

The values below were obtained by conventional steam stripping at the conditions shown. Values are for 1973 and 1974.

Suspension Resins

ASTM Cell Class	1973 Time (min.)	1973 Temp. (°C.)	1973 Vacuum ("Hg)	1973 RVCM[2/] (ppm)	1974 Time (min.)	1974 Temp. (°C.)	1974 Vacuum ("Hg)	1974 RVCM[2/] (ppm)
GP6-15443	40	70	15	8,500	45	80	13	2,700
GP5-15443 GP5-15543 GP4-16043	40	75	15	8,500	45	80	13	2,400
GP-3 15343 GP-1 16243	45	80	13	10,000	45	80	13	2,000[1/]
Copolymer	30	50	15	10,000	30	50	15	10,000

[1/] Improvement in RVCM achieved by changing recipe to obtain more porous resin.
[2/] RVCM - Residual Vinyl Chloride Monomer

Emulsion Resins

	1973 Time (min.)	1973 Temp. (°C.)	1973 Vacuum (" Hg)	1973 RVCM[2/] (ppm)	1974 Time (min.)	1974 Temp. (°C.)	1974 Vacuum (" Hg)	1974 RVCM[2/] (ppm)
Dispersion	NA[1/]	60	20	7,000	NA	65	18	5,500
Latex	NA[1/]	65	22	800	NA	60	15	800[3/]

[1/] Stripping is continuous
[2/] RVCM - Residual Vinyl Chloride Monomer
[3/] Equilibrium has been reached. Further reduction of vacuum and increase in temperature will not achieve reduced RVCM. New technology is required for further RVCM reductions.

Bulk Resins

ASTM	1973 Time (min.)	1973 Temp. (°C.)	1973 Vacuum (" Hg)	1973 RVCM[1/] (ppm)	1974 Time (min.)	1974 Temp. (°C.)	1974 Vacuum (" Hg)	1974 RVCM[1/] (ppm)
GP2-16243, GP2-49243, GP3-4943	120	70	20	3,000	150	75	25	300[2/]

1/ RVCM - Residual Vinyl Chloride Monomer

2/ Function of both increased stripping and increased VCM polymerization conversion

Company B is now experimenting with an improved method of stripping which improves the efficiency of monomer removal from the polymer, and for porous particles will reduce monomer to low levels (< 100 ppm). The process uses a continuous countercurrent steam stripping column. The following is their own description of the system.

"The slurry will be fed to the top of a stripping column and allowed to trickle downward countercurrent to a flow of steam ascending the column. Mixed vapors of steam and monomer will be condensed and allowed to flow into a decanter. Monomer can be drawn off and reused in the process. The aqueous layer will be returned to the top of the column so that its monomer content may be added to the overhead stream, with excess water flowing out of the bottom of the column with the slurry.

The process has been used to date for only a few of the many recipes represented in [Company B] production. The column is very effective for those resins composed of porous particles. For these resins it is expected that residual monomer levels substantially below 100 ppm, and in some cases less than 10 ppm, can be achieved. For non-porous resins less complete removal of monomer can be achieved."

4.12.1.3 Company C[3]-

These data are based on limited plant experience in implementing Research and Development recommendations. The reduction in vinyl chloride has been achieved by increasing thermal input, vacuum, time, or combinations of these parameters during the monomer recovery step.

Suspension Resins 1974 - Residual Vinyl Chloride Monomer

	Homopolymer Low M.W.	Homopolymer High M.W.	Copolymer All
Into dryer	500 ppm	200-300	100-150
Out of dryer	100 ppm	100	50
Dryer emission factor lb VCM/ 100 lb PVC	0.04	0.015	0.0075

Dispersion[1/] 1974 - Residual Vinyl Chloride Monomer

Into dryer	8,000-22,000 ppm
Out of dryer	15-50 ppm
Dryer emission factor lb VCM/ 100 lb PVC	1.50

[1/] Wacher process

4.12.2 Carbon Adsorption

4.12.2.1 Vendor Data[4]-

One vendor of activated carbon has submitted data from laboratory studies on the control of vinyl chloride by carbon adsorption. The conclusions of the studies were: activated carbon readily absorbs vinyl chloride in concentrations ranging from 50 parts per million (ppm) to over 30 percent by volume (300,000 ppm); one hundred percent removal of vinyl chloride is technically feasible using dual beds of activated carbon; activated carbon saturated with vinyl chloride can be regenerated in-place using either steam or hot nitrogen to

desorb the vinyl chloride; and after 15 cycles of operation (saturation, desorption, and drying), no polymerization of vinyl chloride had occurred on the bed.

The following data were developed by this vendor in their study of the applicability of carbon adsorption to vinyl chloride recovery. The discussion and data are from the company's Bulletin 23-200.

"Cyclic Test Results

The data in table I represent the results of tests conducted to determine the adsorption and desorption characteristics of activated carbon for a proposed VCM recovery system. A nitrogen stream containing 1 percent by volume VCM was passed through a 4.5-inch deep bed of Pittsburgh Type PBL 6x16 mesh activated carbon at ambient temperature and pressure at a flow of 30 feet per minute (fpm) until VCM breakthrough occurred. At this point, the VCM was desorbed by passing either steam or nitrogen at 300°F through the carbon bed. The system was operated for fifteen cycles-using steam as the regenerant for the first ten cycles and hot nitrogen for the last five.

As the data in table I indicate, no loss in adsorptive capacity was observed over the entire 15 cycles of

operation. The fluctuations in capacity resulted from variations in the 1 percent VCM flow and, in some cases, from incomplete water removal from the carbon following regeneration.

On the basis of analyses of the carbon conducted prior to and following the test, it was concluded that VCM had not polymerized in the carbon bed (table II).

VCM Breakthrough Studies

A series of tests conducted to compare the VCM breakthrough capacities of various grades of activated carbon under conditions of interest to VCM and PVC manufacturers indicates that fine-pore, high surface area carbons such as Pittsburgh Type BPL and Type PCB are the most efficient; and, that fine mesh size carbons produced longer break times and steeper breakthrough curves (figures 1 and 2). Using a gas chromatograph with a sensitivity of 25 ppm, no VCM was observed in the effluent air prior to breakthrough.

Tests were also conducted to determine minimum breakthrough characteristics for Pittsburgh Type PCB 12x30 and Type BPL 12x30. The results of these tests, using a Flame Ionization Detector with a sensitivity of 0.1 ppm VCM are depicted in figure 3 and figure 4.

On the basis of these breakthrough studies, it was concluded that activated carbon can remove essentially 100 percent of VCM in air until breakthrough occurs, at

which time over 90 percent of the carbon bed is saturated with VCM vapor.

Using the data generated during this series of tests, figure 5 was developed using a computer correlation to determine the adsorptive capacity of Pittsburgh Type PCB 12x30 as a function of VCM concentration. Note that even in concentrations as low as 10 ppm, Type PCB carbon's capacity for VCM is 1 percent by weight. The adsorptive capacity of Pittsburgh Type BPL 12x30 as a function of VCM concentration is depicted in figure 6."

TABLE I
CYCLIC ADSORPTION OF
1% VINYL CHLORIDE ON BPL 6x16

Cycle	% Adsorbed--Wt.
1	12.1
3	9.7
5	11.9
7	12.4
9	9.9
11	11.8
13	12.3
15	12.3

TABLE II
CARBON ANALYSIS

	Virgin	After Test
Apparent Density, g/cc	0.499	0.501
CCl_4 No.	64.1	63.2
Iodine No.	1113	1106

These studies indicate that a stream containing 50 ppm vinyl chloride passing through a 3.5 inch deep bed of activated carbon at 73 feet per minute will leave the adsorber at less than 10 ppm vinyl chloride for 2 hours and 20 minutes of operation. The carbon used was a Pittsburgh Type PCB 12x30. (See figure 3).

Figures 5 and 6 can be used to calculate the amount of carbon necessary for a given stream. As an example, a typical rotary system on a polyvinyl chloride suspension plant can be described as follows:

170 ppm vinyl chloride on exhaust stream

0.63 kg/100 kg (lb/100 lb) product emission factor

66°C (150°F) exhaust temperature

8150 kg (18,000 lb) PVC/hr produced

The amount of vinyl chloride vented in this stream can be calculated from the above data.

.63 lb VCM/100 lb PVC x 18,000 lb PVC produced/hr = 114 lb VCM/hr

The partial pressure is directly related to the vinyl chloride content of the stream.

170 ppm x 14.7 psia = 25×10^{-4} psia

Using this calculated partial pressure of 25×10^{-4} psia on the abscissa of figure 6 and following the line it is represented by vertically to 150°F will give a bed capacity of 0.5% on the ordinate of the figure.

.005 = lb VCM collected/lb carbon in the bed

The capacity must be halved because of the high moisture content of the stream.[7]

$$\text{lb carbon required for this dryer stream} = \frac{114 \text{ lb VCM/hr}}{.0025}$$

= 45,600 lb carbon/hr needed

Assuming a breakthrough time of three hours and 2 carbon beds needed[7], this indicates that 124,000 kg (273,600 pounds) of carbon is needed for this source.

4.12.2.2 <u>Polyvinyl Chloride Production Data</u>[5]-

One producer of polyvinyl chloride has installed a carbon adsorption unit on a new polyvinyl chloride plant in Pasadena, Texas. This system will treat the gaseous discharges from the slurry blend tanks and the monomer recovery system. In three runs of their pilot study, no polymerization of

FIGURE 1 – 33% VINYL CHLORIDE IN AIR

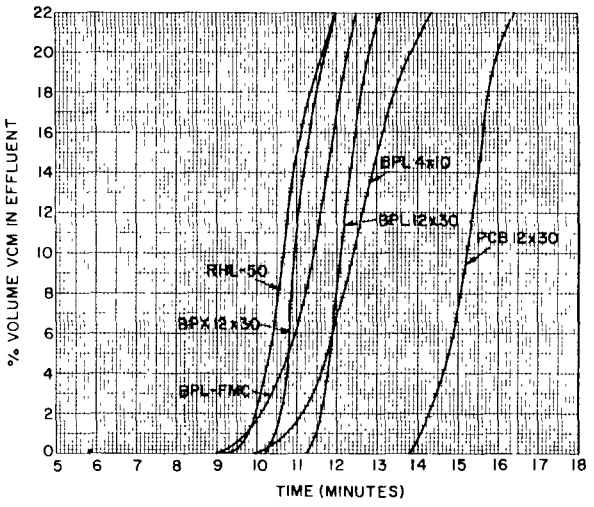

Test gas for this study was a 750 BVH air stream containing 33 percent by volume VCM. This stream was passed through a 9-inch deep bed of activated carbon (60 cc) at 9 fpm. VCM breakthrough was monitored with Bacharach explosion meter with a lower detectable limit of 50 ppm.

FIGURE 2 – 1% VINYL CHLORIDE IN AIR

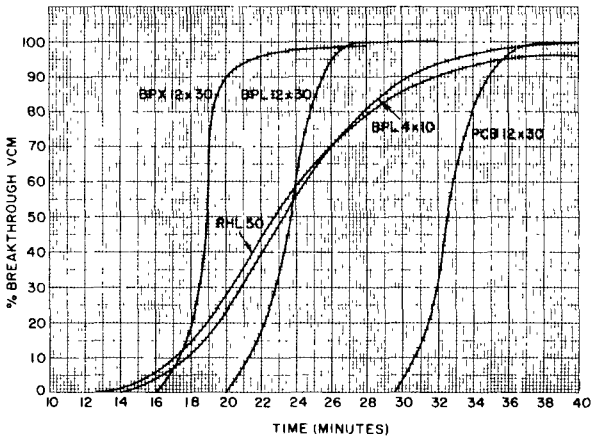

Test gas for this study was a 6000 BVH air stream containing 1 percent by volume VCM This stream was passed through a 9-inch deep bed of activated carbon (60 cc) at 75 fpm. A gas chromotograph with a sensitivity of 25 ppm was used to monitor VCM in effluent air from the carbon bed.

FIGURE 3 – 50 ppm VINYL CHLORIDE IN AIR

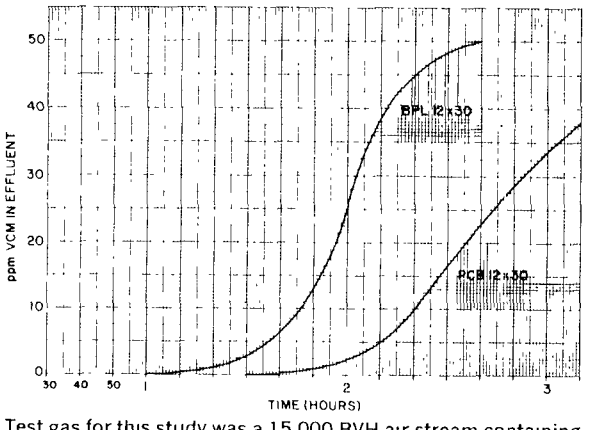

Test gas for this study was a 15,000 BVH air stream containing 50 ppm VCM. This stream was passed through a 3.5-inch deep bed of activated carbon at 73 fpm. A Flame Ionization Detector with a sensitivity of 0.1 ppm was used to monitor for VCM in effluent from the carbon bed.

FIGURE 4 – 1% VINYL CHLORIDE IN AIR

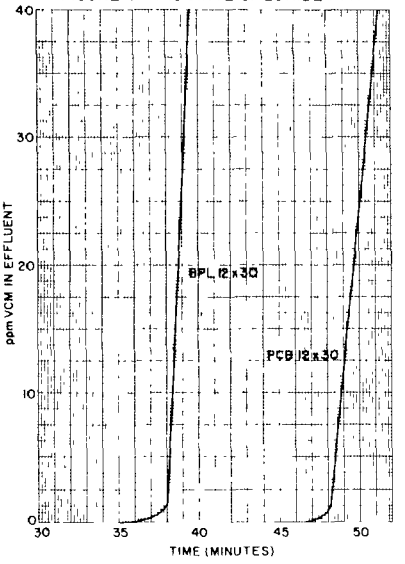

Test gas for this study was a 3000 BVH air stream containing 1 percent by volume VCM This stream was passed through a 3 5-inch deep bed of activated carbon at 14 5 fpm. VCM in the effluent from the carbon bed was monitored with a Flame Ionization Detector with a sensitivity of 0.1 ppm.

FIGURE 5 – ADSORPTION OF VINYL CHLORIDE ON PCB

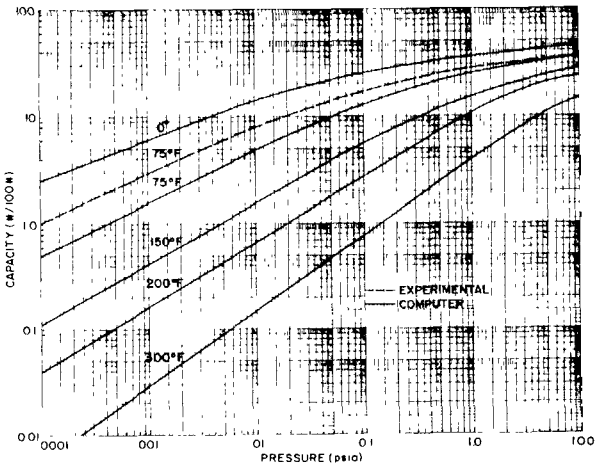

FIGURE 6 – ADSORPTION OF VINYL CHLORIDE ON BPL

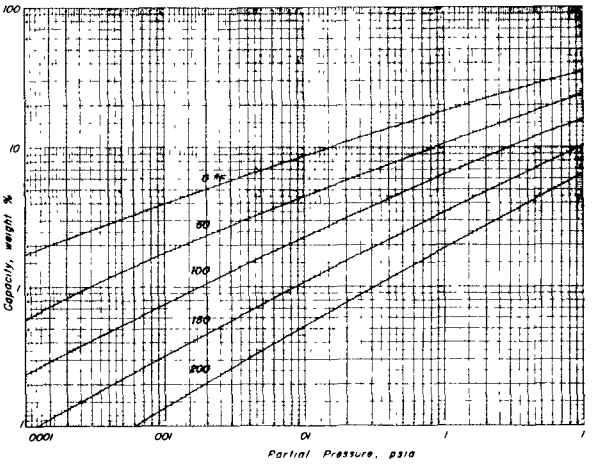

vinyl chloride was found on the carbon bed. The runs were made for 19,21, and 28 cycles on a stream containing 29 mol percent vinyl chloride 71 mol percent air. The nominal velocity of the treated stream was 8.84 meters per minute (29 feet per minute) at ambient temperature (21°C or 70°F) and pressure. Data submitted by the company from one run is given in table 4-7.

On May 13, 1975, the company reported[9] that the production scale unit had gone through more than 700 regeneration cycles since going on stream January 31, 1975. The vinyl chloride monomer content in the exit stream was still below 10 ppm.

4.12.3 Incineration

On October 7, 8, and 9, 1974 the Environmental Protection Agency with Scott Research Laboratories tested a steam boiler which used chlorinated hydrocarbon as part of the system's fuel. The steam boiler at the time was burning a combination of twenty one vent streams from the ethylene dichloride, ethyl chloride, and vinyl chloride plants (see figure 9-1). The streams consisted mostly of chlorinated hydrocarbons but the exact flow or composition of each of the twenty one vents was not determined. The oxychlorination vent was not incinerated.

The total vent to the boiler was measured and sampled (at 1). The flow rate ranged from 0.425 to 1.7 dry cubic meters per minute (15 to 60 DSCFM), the percent vinyl chloride in the stream varied from 1.3 percent to 4.0 percent and about 36.8 cubic meters per minute (1300 SCFM) of combustion air was used.

The incinerator-boiler was a modified Dixon Firetube (6.1 x 1.8 meters or 20' x 6') rated at 4536 kg of steam per hour (10,000 pounds of steam an hour) at 18 atmospheres. During this test the steaming rate was set at 3890 kg/hr (7,500 lbs/hr). As the heat content of the waste gas went up and down, natural gas was added automatically to maintain this steaming rate. It was, therefore, possible to detect major changes in the composition of the vent gas by observing the natural gas valve position and the draft air valve position.

The flue gas from the fire box entered a gas scrubber to remove the HCl. The scrubber was a packed column, 137 cm (54 inches) in diameter and 12.2 meters (40 feet) high. The hot gas was cooled in a quench section of the scrubber by city water sprayed into the gas stream.

The scrubbing water for the column was taken from a waste water sump.

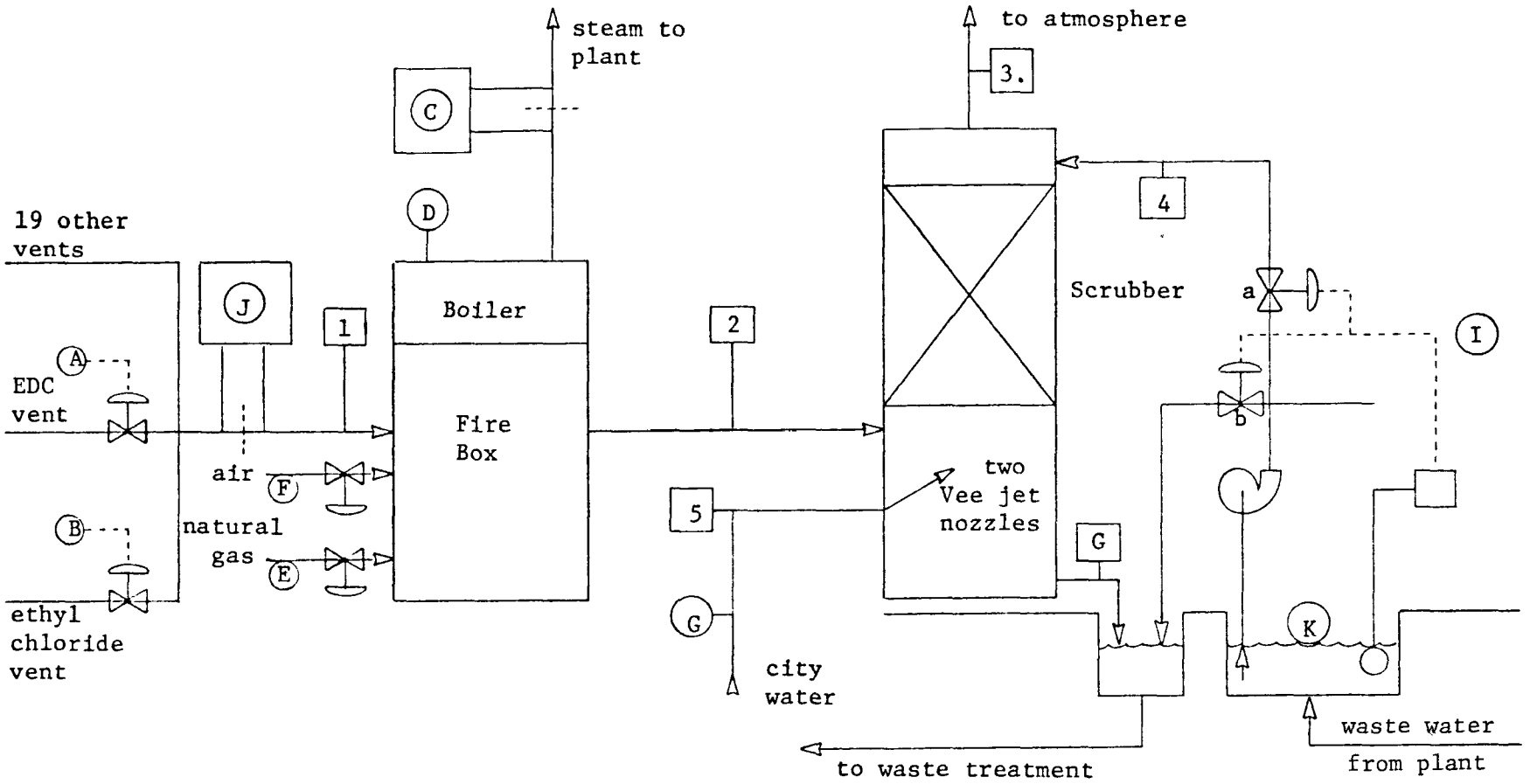

Figure 4-2. AMERICAN CHEMICAL INCINERATOR TEST, OCTOBER 7-9, 1974. (Data points--A,B,etc.; sample points--1,2,etc.)

A level control device maintain a level in the sump by regulating the water to the top of the scrubber. During the test the average pH of waste water was 11.0.

The flue gas was sampled after the fire box (point 2) and after the scrubber (point 3). The gas flow was measured at point 3. The vinyl chloride concentration after the fire box (for six runs) averaged 4 ppm. The water into and out of the scrubber was analyzed and no vinyl chloride was found.

The data from the six runs indicate that the incinerator was about 99% efficient in combusting vinyl chloride.

4.12.4 Solvent Absorption

One company has submitted information on a solvent absorption unit in use at one of their polyvinyl chloride plants. The following is their own description of the system:

"The vent gas absorption system used at the Louisville plant was installed in 1950 to recover residual vinyl chloride in vent gases from a process of synthesizing vinyl chloride from acetylene and hydrogen chloride. The process was later adapted to serve solely as a vent gas scrubber following a low temperature monomer condensing system.

Inerts from the low temperature (-46°C or -50°F) condensing system are compressed to 2.36 atmospheres in a liquid sealed compressor using ethylene dichloride as the sealing liquid. The gases are fed into the bottom of an absorption column and pass upward countercurrent to liquid ethylene dichloride flowing downward over [2.54 cm (1") berl] saddles as packing. Unabsorbed gases are cooled in a refrigerated vent condenser to remove solvent before being vented from the system.

The ethylene dichloride with dissolved monomer is sent to a distillation column where monomer is stripped from the solvent and returned to the low temperature condensing system. The stripped solvent is cooled and returned to the absorption column for reuse."

Operating data from the company indicates that the ethylene dichloride solvent used (circulating at 150 liters or 40 gallons per minute) is capable of controlling emissions to 15 ppm. This is equivalent to 99.9+% efficiency or .01 kg (.02 lb) VCM/hr. The stream is 9.0 standard cubic meters/min. (125 SCFM).

4.12.5 Purge Water System

The following calculation for the reactor stripper opening loss was derived from data submitted by one producer on their water purge/gasholder system. According to this submittal[1], the company . . . " does use a purge water system which forces the monomer from the reactor prior to cleaning and purges it to the gasholder. The average amount of VCM left in the reactor after purging to the gasholder is 8,000 ppm in the vapor."

Data Used:

4,000 gal. reactor	Air = .808 lb./cu. ft. at 25°C
7.48 gal./cu. ft.	VCM con. 0.800% or
3.5 batches between cleaning	0.008 VCM/lb. air = 8000 ppm
10,000 lb./batch	

Calculation:

$$\frac{4000 \text{ gal.}}{7.48 \text{ gal./cu. ft.}} = 535 \text{ cu. ft.}$$

(535 cu. ft.) (.0808 lb. air/cu. ft.) = 43.2 lb. air in reactor

(.008 lb. MVC/lb. air) (43.2 lb. air) = 0.35 lb. VCM/opening

$$\frac{.35 \text{ lb. VCM/opening}}{35{,}000 \text{ lb. PVC/opening}} = .00001 \text{ lb. VCM/lb. PVC}$$

4.12.6 Process Equipment Purge

The data in tables 4.8 and 4.9 show the relationship between equipment size, frequency of purges, and approximate purging emissions when purged to atmospheric pressure for both vinyl chloride monomer and polyvinyl chloride plants. The number of purges are based on estimates of two operating companies. The effect of purging to an assumed level is also shown.

4.12.7 Oxychlorination Process Emissions

Data on the oxychlorination process were requested in a letter written under section 114 on April 2, 1975. The data were compiled to compare the emission rates from each of the oxychlorination plants in the U.S. Table 4-10 shows these data.

4.12.8 Bulk Polyvinyl Chloride Plants

Bulk polyvinyl chloride plants, which can not accept water in the reactors, can purge the reactors by vacuum. The following calculation shows how this vacuum purge can be used to attain the level shown by water purge in section 4.12.7.

Postpolymerization reaction

Given: 565 ft^3 in reactor
15,000 lb of resin are produced per batch
40 lb/ft^3 - tapped bulk density of PVC
Attainable vacuum = 650 mm Hg

a) Calculate the volume of the gas:

$$\frac{15000 \text{ lb}}{40 \text{ lb/ft}^3} = 375 \text{ ft}^3$$

565 ft^3 in reactor-375 ft^3 of resin = 190 ft^3 of gas

b) Pounds remaining after 3 evacuations to 650 mm Hg

$$190 \text{ ft}^3 \times \frac{62.5 \text{ lb}}{379 \text{ ft}^3} \times \frac{110}{760} \times \frac{110}{760} \times \frac{110}{760} = 0.95 \text{ lb}$$

c) On a pounds per 100 pounds basis

$$\frac{.095 \text{ lb VCM after evacuation}}{15000 \text{ lb VCM}} = 0.0006 \frac{\text{lb VCM}}{100 \text{ lb PVC}} =$$

$$.0006 \frac{\text{kg VCM}}{100 \text{ kg PVC}}$$

References for Data to Substantiate the Standard

1. Letter with attachments from J. R. Mudd, General Tire and Rubber Company to Don R. Goodwin, EPA, October 29, 1974.
2. Letter with attachments from W. C. Holbrook, B. F. Goodrich Chemical Company, to Don R. Goodwin, EPA, November 15, 1974.
3. Letter with attachments from W. P. Anderson, Tenneco Chemicals, to Don R. Goodwin, EPA, October 18, 1974.
4. "Calgon Bulletin 23-200," Calgon Corporation, Subsidiary of Merck and Company, Inc.
5. Reference 3.
6. Reference 2.
7. Conversation with R. N. Wheeler, Union Carbide Corporation, South Charleston, West Virginia, February 25, 1975.
8. Conversation with William Lovett, Calgon Corporation, February 2, 1975.
9. Letter with attachments from W. P. Anderson, Tenneco Chemicals, to Leslie B. Evans, EPA, May 13, 1975.

4.13 Control Techniques Summary

This chapter has examined the control techniques which can be applied to control vinyl chloride emissions from each source of emissions in ethylene dichloride-vinyl chloride and polyvinyl chloride manufacturing facilities. Emphasis has been placed on identifying the best available control technology for each source of emissions and the emission levels that can be achieved by applying this technology. The following discussion summarizes the associated emission levels for each source of emissions in the ethylene dichloride-vinyl chloride and polyvinyl chloride plants.

The emissions from pump, compressor, and agitator seals can be controlled by installing double mechanical seals and maintaining a liquid between the seals at sufficient pressure to cause the liquid to leak into the pump should the seal fail.

Vinyl chloride that is present in equipment that is to be opened for maintenance or inspection can be vented to a control device by purging the equipment with an inert gas such as nitrogen or displacing the contents with water before it is opened.

The emissions occurring during loading and unloading from the loading area lines can be controlled by purging the lines to a control device such as an incinerator or carbon adsorption unit. The emissions from slip gauges can also be vented to a control device.

Emissions from leaking pressure relief valves can be reduced by installing leak proof rupture discs upstream of the relief valve.

Emissions resulting from sampling for laboratory analysis can be virtually eliminated by letting the gas that is to be sampled flow through the sample flask to a lower pressure point in the process. The sample flask can then be blocked off and any vinyl chloride that

remains in the sample lines can be purged to a control device before the sample flask is removed.

Many fugitive sources within both ethylene dichloride-vinyl chloride and polyvinyl chloride plants can be monitored with a formal program of leak detection and repair. The detection can be accomplished with both fixed point and portable monitoring devices.

Vinyl chloride can be stripped from the inprocess wastewater and transferred to a control device such as an incinerator or adsorber.

Vinyl chloride that is present in the polymerization reactors can be displaced to the monomer recovery system for reuse by filling the reactor with water before it is opened for cleaning, maintenance or inspection.

The need to open the reactors for cleaning can be reduced by cleaning the reactor while it is closed with high pressure water sprays, circulating an organic solvent through the reactor to dissolve any solids that may have accumulated and by a combination of recipe reformulation and reactor design to reduce scale formation.

Polymerization reactor safety valve discharges can be avoided by instrumenting each reactor with a pressure or temperature alarm to alert the operator to take appropriate action. This could include venting the reactor contents to a gasholder where the vinyl chloride can be recycled or injecting certain chemicals into the reactor to stop the reaction and prevent further pressure build-up. During power failure these chemicals could be added manually by hydraulic injection systems.

Vinyl chloride that is present in all captive or point sources in the monomer and polymer plants can be controlled by adsorption on

activated carbon, by absorption in an organic solvent, or by incineration. Each of these techniques can reduce the vinyl chloride content of the gas being treated to less than 10 ppm.

Control levels equivalent to the "add-on" devices discussed above can be achieved in certain point sources in the polyvinyl chloride plant by stripping the slurry leaving the reactors of the residual, unreacted vinyl chloride. These sources, which are downstream of the stripper, include the slurry blend tanks, the centrifuges, the dryers, and the bulk resin storage areas.

Table 4-1. SOURCE DESCRIPTION FOR TYPICAL POLYVINYL CHLORIDE PLANT[2/]
68 mm kg/year (150 mm lb/year)

Emission Source	Gas Volume SCMM[3/] (SCFM)	Gas Volume ACMM (ACFM)	Gas Temp. °C (°F)	VCM Concentration ppmv	Emissions kg VCM/ 100 kg PVC (lb VCM/ 100 lb PVC)	Emissions kg/hr (lb/hr)	Comments
1. Fugitive							
a) Transfer operations	N.A.[1/]	N.A.	Ambient	100%	Total for all fugitive emissions = 1.53 (1.53)	Total for fugitive emissions = 24.5 (275)	1. Fugitive emissions are not broken down by source on section 114 responses. Total figure estimated by material balance.
b) Safety relief valves	N.A.	N.A.	Ambient	100%			
c) Pumps, compressors, agitator seals	N.A.	N.A.	Ambient	100%			
d) Sampling for lab. analysis	N.A.	N.A.	Ambient	100%			
e) Opening equipment for inspection & maintenance	N.A.	N.A.	Ambient	100%			
f) Vacuum pumps & steam jets	N.A.	N.A.	Ambient	100%			
g) Inprocess wastewater	N.A.	N.A.	Ambient	100%			
h) Leaks at flanges, seals, etc.	N.A.	N.A.	Ambient	100%			
2. Reactor and stripper losses							
a) Safety relief	N.A.	N.A.	65.5 (150)	N.A.	0.20 (.2)	16.3 (36)	2.a. Losses from Safety Relief Valves are 2270 to 4540 kg (5000-10,000 lb) VCM in a 5-10 minute period.
b) Reactor opening	56.6 (2000) max.	65.0 (2300)	65.5 (150)	1200	0.46 (.46)	37.6 (83)	2.b. Gas volume assumes that steam jets are used to remove VCM from reactor.

[1/] N.A. - Not Applicable

[2/] Typical Dispersion Plant - 13.6 mm kg/yr (30 mm lb/yr); typical bulk plant - 45.4 mm kg/yr (100 mm lb/yr).

[3/] Standard cubic meters per minute.

Table 4-1 (continued). SOURCE DESCRIPTION FOR TYPICAL POLYVINYL CHLORIDE PLANT
68 mm kg/year (150 mm lb/year)

Emission Source	Gas Volume SCMM (SCFM)	Gas Volume ACMM (ACFM)	Gas Temp. °C (°F)	VCM Concentration ppmv	Emissions kg VCM/ 100 kg PVC (lb VCM/ 100 lb PVC)	Emissions kg/hr (lb/hr)	Comments
3. Monomer recovery system	.935 (33)	.85 (30)	-7 (20)	500,000	.48 (.48)	39 (86)	3. For other types of resins, emission factors (kg VCM/ 100 kg PVC) range from .006 (solution) to 0.5 (dispersion).
4. Slurry blend tank	103 (3636)	109 (3842)	38 (100)	2,000	.42 (.42)	34.4 (76)	4. No slurry blend tank in bulk process. Uncontrolled slurry emissions are vented by fans to atmosphere for safety purposes.
5. Centrifuges	N.A.	N.A.	38 (100)	N.A.	.13 (.13)	10.4 (23)	5. No centrifuges in bulk or latex processes.
6. Dryers	1430 (50,400)	1640 (58,000)	65.5 (150)	214	.63 (.63)	51 (113)	6. Air volumes are higher in dispersion process (2150 ACMM or 76,000 ACFM) because of use of spray dryers. Emissions much higher in dispersion process (2.41 kg VCM/100 kg PVC). No dryer in bulk and latex processes.
7. Storage silos	522 (18,450)	522 (19,490)	38 (100)	67.5	.07 (.07)	5.9 (13)	7. Storage silo air volume can be much lower than this.
				TOTAL EMISSIONS	3.92 (3.92)	319 (705)	

Table 4-2 SOURCE DESCRIPTION FOR TYPICAL ETHYLENE DICHLORIDE-VINYL CHLORIDE PLANT 316 mm kg/yr (700 mm lb/yr)

Emission Source	Gas Volume SCMM 2/ (SCFM)	Gas Volume ACMM (ACFM)	Gas Temp. °C (°F)	VCM Concentration ppmv	Emissions kg VCM/ 100 kg VCM (lb VCM/ 100 lb VCM)	Emissions kg/hr (lb/hr)	Comments
1. Fugitive	N.	A.1/	N.A.	N.A.	Total = .1221	Total = 44 (97)	1. Sources are the same as PVC plant. (See table 4-1.) Total fugitive emission estimated by material balance.
2. Light Ends Vents	2.8-4.5 (100-160)	3-4.8 (105-170)	38 (100)	42,700	.05	18 (40)	2. Known as ethylene dichloride finishing column vent.
3. Finishing Column	2.8 (100)	3.5 (122)	38 (100)	99+%	0.24	87 (191)	3. Known as vinyl chloride finishing column vent.
4. Oxychlorination Vent	227-368 (8,000-13,000)	227-368 (8,000-13,000)	5-38 (40-100)	163	0.036	13 (29)	
				Total	.4479	162 (357)	

1/ N.A. - Not Applicable.

2/ CMM = Cubic meters per minute

Table 4-3. CONTROL TECHNIQUES APPLICABLE TO POLYVINYL CHLORIDE PLANTS
TYPICAL SIZE 68 mm kg/year (150 mm lb/year)

Emission Source	Applicable Control Techniques	Uncontrolled Emissions		Achievable Emission Levels		Comments
		kg VCM/ 100 kg PVC (lb VCM/ 100 lb PVC)	kg/hr (lb/hr)	kg VCM/ 100 kg PVC (lb VCM/ 100 lb PVC)	kg/hr (lb/hr)	
1. Fugitive		Total	Total			1. Control Devices include solvent absorbers, carbon adsorption, and incineration--each capable of control to 10 ppm.
a. Transfer Operations Loading & Unloading	Purge to Control Device	For	For			
b. Safety Relief Valve Leaks & Discharges	Rupture Discs Flare	All	All			
c. Pumps, Compressors & Agitator Seals	Double Mechanical Seals	Fugitive	Fugitive			
d, Sampling for Laboratory Analysis	Purge Sample Flasks Back to Process	Emission Sources=	Emission Sources=	0.16 (0.16)	13 (29)	Double mechanical seals (l.c.) are equipped with liquid under pressure between the seals.
e. Opening Equipment for Maintenance & Inspection	Displace Gas to Control Device	1.53 (1.53)	125 (275)			
f. Vacuum Pumps & Steam Jets	Vented to Control Device					
g. Inprocess Wastewater	Strip VCM and Vent to Control Device					
h. Leaks at Flanges, Seals, etc.	Multipoint Fixed & Portable Monitoring Devices					
2. Reactor & Stripper Losses						
a. Safety Relief Valve	Shortstop, Gasholder	0.2 (0.2)	16.3 (36)	(0)	0	
b. Reactor Openings	Displace Gas to Gas-holder	0.46 (0.46)	37.6 (83)	.001 (0.001)	0	

TABLE 4-5(CONT.) CONTROL TECHNIQUES APPLICABLE TO POLYVINYL CHLORIDE PLANTS
TYPICAL SIZE 68 mm kg/year (150 mm lb/year)

Emission Source	Applicable Control Techniques	Uncontrolled Emissions		Achievable Emission Levels		Comments
		kg VCM/ 100 kg PVC (lb VCM/ 100 lb PVC)	kg/hr (lb/hr)	kg VCM/ 100 kg PVC (lb VCM/ 100 lb PVC)	kg/hr (lb/hr)	
3. Monomer Recovery System	Reduce Inerts	0.48 (0.48)	39 (86)	.001 (0.001)	0	
	Solvent Absorber			.001 (0.001)	0	
	Carbon Adsorber			.001 (0.001)	0	
4. Slurry Blend Tanks	Improved Stripping	0.42 (0.42)	34 (76)	.013 (0.013)	1 (2)	
	Carbon Adsorption			0	0	
	Solvent Absorption			0	0	
	Incineration			0	0	
5. Centrifuge	Improved Stripping	0.13 (0.13)	10.4 (23)	0.004 (0.004)	0.5 (1)	
	Carbon Adsorption			0	0	
	Solvent Absorption			0	0	
	Incineration			0	0	
6. Dryers	Improved Stripping	0.63 (0.63)	51 (113)	.02 (0.02)	1.8 (4)	6. Represents energy requirements for control of dryer and bulk storage
	Carbon Adsorption			.02 (0.02)	1.8 (4)	
	Incineration			.02 (0.02)	1.8 (4)	

Table 4-3(cont.) CONTROL TECHNIQUES APPLICABLE TO POLYVINYL CHLORIDE PLANTS
TYPICAL SIZE 68 mm kg/year (150 mm lb/year)

Emission Source	Applicable Control Techniques	Uncontrolled Emissions		Achievable Emission Levels		Comments
		kg VCM/ 100 kg PVC (lb VCM/ 100 lb PVC)	kg/hr (lb/hr)	kg VCM/ 100 kg PVC (lb VCM/ 100 lb PVC)	kg/hr (lb/hr)	
7. Storage Silos	Improved Stripping	.07 (0.07)	5.9 (13)	.002 (0.002)	.18 (0.4)	
	Carbon Adsorption			.002 (0.002)	.18 (0.4)	
	Incineration			.002 (0.002)	.18 (0.4)	
	Silo Stripping			.002 (0.002)	.18 (0.4)	

1/ Includes slurry blend tank and vent condenser together.

2/ Dryers and storage silos grouped together.

3/ Cost of improved stripping in dryer column includes stripping cost for control of slurry blend tanks, centrifuge, dryer, and bulk storage.

4/ Direct operating costs.

Table 4-4. CONTROL TECHNIQUES APPLICABLE ETHYLENE DICHLORIDE-TO VINYL CHLORIDE PLANTS TYPICAL SIZE 316 mm kg/yr (700 mm lb/yr)

Emission Source	Applicable Control Techniques	Uncontrolled Emissions		Achievable Emission Levels		Comments
		kg VCM/ 100 kg VCM (lb VCM/ 100 lb VCM)	kg/hr (lb/hr)	kg VCM/ 100 kg VCM (lb VCM/ 100 lb VCM)	kg/hr (lb/hr)	
1. Fugitive	Monitoring	Total .012	44 (97)	.012 (.012)	4.4 (9.7)	1. Sources and Control are same as PVC plants (see table 5-3).
	Sample Flask Control					
	Rupture Disks Canned Pumps					
2. Light Ends Vents	Incineration	.05	18 (40)	.000 (.000)	0	2. Incineration is capable of control to 10 ppm.
3. Finishing Column Vents	Incineration	.24	87 (191)	.000 (.000)	0	
4. Oxychlorination Vent	Incineration	.036	13 (29)	.002 (.002)	1 (2)	

Table 4-5. APRIL 1975 STATUS OF DISPERSION RESIN STRIPPING WITH PROJECTION OF FUTURE CAPABILITIES[1/]

Plant	Current RVCM[2/] After Stripper	(ppm) In Product	Projected RVCM (ppm) After Stripper	Time to Implement Controls Needed to Meet Projected Levels
A	30,000	1-3	20,000	6 months
B	50,000	5	10,000	6 months
C	20,000	5-15	4000-6000	48 months
D	1500-4000	-	-	-
E	15,000	1-10	6000	12-18 months
F	13,000-18,000	10	4500	30 months
			500-1000	42 months
G	2000-10,000	25	2000	30 months
			400	48 months
H	14,000-18,000	5-30	1200	30 months
I	2000	<1	-	-

1/ From responses to March 31, 1975, section 114 request

2/ RVCM = Residual Vinyl Chloride Monomer

Table 4-6 APRIL 1975 STATUS OF SUSPENSION RESIN STRIPPING[1/]

Company	Number of Suspension Resin Grades	% of Suspension Resin Production	R VCM (ppm)
A [2/]	-	60	2000-4000
		40	4000-6000
B [2/]	-	100	2000-5000
C	5 Grades	100	<400
D	-	80	400
		20	500-700
E	13 Grades	86.8	0-50[3/]
		5.4	100
		3.8	500
		3.2	1000
		.8	4000
F	15 Grades	100	<400
G	4 Homopolymer	6	1500
		14	2500
		80	100
	4 Copolymer	16	300
		84	400
H	4 Grades	100	2000-10,000
I	-	38	400
		9	600
		25	800
		5	1800
		15	3600
		8	4000

[1/] Based on data from responses to 3/31/75 section 114 request.

[2/] All suspension resins to be reduced to <400 ppm R VCM by 7/75.

[3/] Some values are speculative until improved stripping is installed.

TABLE 4-7

ADSORPTION OF RECOVERED VINYL CHLORIDE MONOMER

ON ACTIVATED CARBON

Equipment- Steel pipe, 1.61" ID packed with Pittsburgh Type BPL 4 x 10 mesh activated carbon manufactured by the Calgon Corporation, Pittsburgh, Pa. Packed height of bed 5'2".

Experimental Conditions- Vinyl Chloride Monomer recovered from a pilot plant polymerization reactor having a gas composition of 29 mol percent VCM and 71 mol percent air was fed to the activated carbon bed at a nominal velocity of 29 feet per minute at ambient temperature (70°F)and pressure.

Step	Time (Min.)	Direction of Flow
Adsorption	20-30[1]	Downward
Steam Desorption (20 psia 0.6 lb/min)	45-120	Upward
Nitrogen Drying (250°F), (0.3 CFM)	60	Downward

Cycle Number	Bed Capacity (lbs. VCM/100 lb Carbon)	Steam Desorption Step (min.)
1	19.4	45
3	15.1	45
5	18.7	70
7	15.1	45
9	18.7	75
11	18.0	75
13	17.3	75
15	18.4	75
17	14.4	100
19	18.0	100
21	12.2	110
23	11.2	120
25	9.8	120
27	6.1	120
28	8.3	120

[1] Time varied since adsorption step terminated when VCM breakthrough occurred.

Carbon Analysis- After 28 cycles the used carbon was removed from the unit and examined. There was no visible evidence of PVC on the carbon or change in carbon color. The carbon was extracted with THF and the extract gave 0.06 weight percent liquid which on analysis proved to be a phenolic compound, however, no PVC was found to be present. Unused carbon extracted with THF yields 0.06 weight percent of liquid of similar type as the used carbon.

TABLE 4-8. KILOGRAMS PER YEAR OF VCM EMITTED DURING EQUIPMENT PURGE FOR TYPICAL 316 mm kg/yr (700 mm lb/yr) EDC-VCM PLANT

Size of Equipment Gallons	Class of[1/] Equipment	Pieces of[1/] Equipment	Times Purged[1/] Each Per Year	Total Purges[1/] Per Year	Total Gallons of Equipment Purged Per Year	Kg (pounds) VCM[2/] emitted per year 100% VCM at 760 mm Hg absolute	Kg (pounds) VCM[3/] emitted per year with an assumed equipment purge
0-50	pumps	12	1 1/2	18	900	9.0 (19.8)	3.4 (7.5)
50-500	small heat exchangers			1	500	5 (11.0)	0.25 (0.55)
500-5000	condensers & accumulators			1	5000	50 (110)	0.55 (1.2)
5000-50000	distillation columns			1	50000	500 (1099)	10 (22.0)
50,000 and up	70,000 gallon run down tank			1/3	23000	230 (506)	4.5 (10.1)
	10,000,000 pound storage			1/3	666000	6665 (14682)	133.3 (293.7)
						7459 (16427)	

1/ Information submitted by Jim Mullins, Shell Chemical, in telephone conversation with Leslie Evans, April 8, 1975.

2/ Equipment reduced to atmospheric pressure before opening.

3/ Equipment purged before opening so that when equipment is opened the vinyl chloride emitted to the atmosphere shall be no more than 25 gallons (at Standard temperature and pressure) or 2% of the volume purged (at STP), whichever is larger.

TABLE 4-9. KILOGRAMS PER YEAR OF VCM EMITTED DURING EQUIPMENT PURGE FROM TYPICAL 68 mm kg/yr (150 mm lb/yr) PVC PLANT

Size of Equipment Gallons	Class of[1/] Equipment	Pieces of[1/] Equipment	Times Purged[1/] Each Per Year	Total Purges[1/] Per Year	Total Gallons of Equipment Purged Per Year		Kg (pounds) VCM[2/] emitted per year 100% VCM at 760 mm Hg absolute	Kg (pounds) VCM[3/] emitted per year with an assumed equipment purge
0-50	pumps	10	1	10	500	500	5.0 (11)	1.9 (4.2)
50-500	exchangers	3	2	6	3,000		79.5 (175.2)	4.3 (9.4)
	vent condensers	1	2	2	1,000	8,500		
	recovery systems	3	3	9	4,500			
500-5000	weigh tanks	2	1	2	10,000	25,000	249.4 (549.4)	2.8 (6.1)
	recovered VCM tanks	3	1	3	15,000			
5000-50000	None							
50,000 and up	100,000 gallon storage	2	1/4	1/2	50,000	50,000	498.9 (1098.8)	9.8 (21.9)
							832.8 (1834.4)	

1/ Scaled up to 150 mm pounds per year plant from information submitted by John Barr, Air Products and Chemicals, in telephone conversation with Leslie Evans, April 9, 1975.

2/ Equipment reduced to atmospheric pressure before opening

3/ Equipment purged before opening so that when equipment is opened the vinyl chloride emitted to the atmosphere shall be no more than 25 gallons (at standard temperature and pressure) or 2% of the volume purged (at STP), whichever is larger.

TABLE 4-10. OXYCHLORINATION PROCESS VENT DESCRIPTION

Company	EDC plant capacity 10^6 kg/yr (lb/yr)	kg VCM/hr (lb/hr)	kg VCM/100 kg EDC (lb/100 lb)	Heat value, kcal/SCM (Btu/SCF)	Volume flow, SCMM (SCFM)	ppm	Technology	Control
A	90 (200)	0.33 (0.74)	0.003 (0.003)	--	200 (7,000)	16	B.F. Goodrich Fluid Bed	None
B	35.47 (78.84)	0.81 (1.8)	0.02 (0.02	365 (41)	29 (1,023)	187	Stauffer Fixed Bed,air	None
C	275 (613)	33 (74)	0.106 (0.106)	--	321 (11,250)	670 range (1974) 35-9,800	Stauffer Fixed Bed,air	Second stage Cl_2 1975 sometime
D	73 (162)	0.54 (1.2)	0.0065 (0.0065)	172 (19.3)	131 (4,598)	27	B.F. Goodrich Fluid Bed,air	Catalytic incineration pilot plant in operation[3]
E	495 (1,100)	46 (103)	0.077 (0.077)	--	159 (5,570) before 10/75	1,770	Dow, oxygen, in 1975	Incineration waste heat boiler, 2 venturi scrubbers, water and caustic, 10/75
F	134 (298)	1.7 (3.8)	0.0112 (0.0112)	187 (21)	181 (7,337)	60	Ethyl Fluid Bed, air	None
G	210 (466)	6.2 (13.7)	0.0235 (0.0235)	258 (29)	454 (15,900)	42	B.F. Goodrich Fluid Bed, air	Absorber
H	90 (200)	2.6 (5.9)	0.0235 (0.0235)	294 (33)	197 (6,900)	42	B.F. Goodrich Fluid Bed, air	Absorber
I	97 (216)	9.5 (21.2) before incineration	0.09 (0.09)	6,349 (713)	8.7 (304)	7,000	PPG Fluid Bed Oxygen and Ethylene recycle	Incineration, no heat[1] recovery, water scrub
J	194 (432)	--	--	--	--	--	PPG Fluid Bed Oxygen and Ethylene recycle	Planned 9/75
K	306 (680)	9.0 (20)	0.023 (0.023)	200 (22.5)	346 (12,125)	170	Stauffer Fixed Bed, air	Second stage Cl_2
L	306 (680)	9.0 (20)	0.023 (0.023)	200 (22.5)	346 (12,125)	170	Stauffer Fixed Bed, air	Second stage Cl_2, late 1975
M	112 (250)	0.3 - 0.63 (0.7 - 1.4)	0.0024-0.0047 (0.0024-0.0047)	62 MM (7 MM)	100 (3,500)	20 - 30	Vulcan Fixed Bed, air	None

[1] Services other units and therefore requires supplemental fuel. Engineering study under way on recovery of HCl and heating value.

[2] A separate incinerator without heat recovery provides for back up. 2000 lb/hr gas required for primary incinerator.

[3] Design of production unit under way.

Table 4-11 POLYVINYL CHLORIDE PARTICULATE EMISSION FACTORS

Particulate Sources	Control Technique	Controlled Emissions kg/kg PVC[1]
A. Dryer		
a) Rotary	Centrifugal separator Fabric filter	0.01 0.006
b) Flash	Centrifugal separator Fabric filter	0.0003 0.0001
c) Fluidized Bed	Centrifugal separator	
d) Spray	Fabric filter	0.0017
B. Storage		
a) bins	Fabric filter	0.0002
b) silos	Centrifugal separator Fabric filter	0.0005
C. Bagging Machine	Fabric filter	0.00015
D. Bulk Loading	Fabric filter	0.0002
E. Resin Transfer Points	Centrifugal separator Fabric filter Centrifugal separator & Fabric filter	0.001 0.0009

[1]Obtained from averaging reported particulate emission rates from industrial responses to the May 30, 1974, letter transmitted from Mr. Don R. Goodwin (EPA) under the authority of Section 114 of the Clean Air Act to the management of companies producing polyvinyl chloride.

5. ALTERNATIVE CONTROL LEVELS

For the reasons described in Chapter 2, it was determined that the regulatory approach for vinyl chloride emissions would be to propose a standard under the authority of section 112 of the Clean Air Act based on best available control technology. Many technical decisions were required in selecting what constitutes best available control technology for the multiple emission sources in ethylene dichloride-vinyl chloride and polyvinyl chloride plants. Therefore, the following criteria were established for making these decisions:

(a) The control technology must be in use in one or more plants in the chemical industry and be generally adaptable for use at the plants subject to the standard within the time allowed for compliance under section 112.

(b) Costs were considered only when they were grossly disproportionate to the emission reduction achieved.

In order to develop an emission standard for each of the emission sources based on the established criteria for "best available control technology", data on control systems were obtained through requests for information under the authority of section 114 of the Clean Air Act, plant visits, consultation with industry representatives and control vendors, one emission test, and two studies under contract to EPA. Except for two emission sources, the emission limits selected for the proposed standard represent control technology which meets these criteria without any question. The two cases about which there is some question are those for which alternative control levels are presented in this chapter.

The alternative control levels presented are realistic alternatives and represent areas of potential controversy. There are other types of alternatives which could have been presented, but which are not because they obviously do not meet the criteria for best available control technology. For example, alternative control levels could have been presented for each of the multiple emission sources in ethylene dichloride-vinyl chloride and polyvinyl chloride plants. The end result would be a large number of alternatives, most of which could not be considered seriously as candidates for a standard based on best available control technology. Additional alternatives could have been presented with each representing regulation of a different number of emission sources, i.e., the first alternative could consist of regulation of the largest emission source, the second alternative could consist of regulation of that one and the next to the largest emission source, etc. The alternatives are not presented in this way, because there are control technologies which have been used for each of the types of emission sources in ethylene dichloride-vinyl chloride and polyvinyl chloride plants and regulation of only some of the emission sources was determined to be less than best available control technology. Although alternatives representing regulation of individual emission sources are not presented as such, Chapter 8 (Tables 8-1 and 8-2) does provide information on emissions from each emission source before and after installation of control, and Chapter 7 provides information on costs for control of each emission source.

There are conceivable alternatives representing more stringent levels of control than those included in this chapter. These alternatives are not presented because they represent technology which clearly does not meet the criteria for best available control technology. Also, their impacts cannot be quantified since they are not being used anywhere and therefore no data are available on them. First, there are technologies which are currently being researched or for which research is planned, but which have not been used commercially. For example, ozonization and oxyphotolysis are two methods being developed to oxidize vinyl chloride into less toxic substances. Secondly, there are emission points for which double control measures could achieve a small increment in emission reduction at a disproportionately high cost. For example, two carbon adsorption units could be installed in series so that the second carbon adsorption unit could be used to collect any emissions from the first carbon adsorption unit during breakthrough. Thirdly, a bubble could be placed around an industrial complex and all the air from the complex could be vented through an enormous control device.

The alternatives presented in this chapter for each source category type represent the same level of control for all emission sources except one. The impacts, however, are evaluated for an entire plant. This way of presenting impacts tends to reduce the relative differences in the impacts between the alternative control levels. For example, if the emission source in question represents 10 percent of the total emissions, a fifty percent change in emissions

from that source would represent only a five percent change in total emissions from the plant.

5.1 Ethylene Dichloride-Vinyl Chloride Plants

The sources of vinyl chloride emissions within typical ethylene dichloride-vinyl chloride plants and their relative contributions to total uncontrolled emissions are shown below:

Emission Source	Percent of Total Uncontrolled Emissions at the Average Plant
(1) Fugitive Emission Sources	27
(2) Ethylene Dichloride Purification	11
(3) Vinyl Chloride Formation and Purification	54
(4) Oxychlorination Reactor	8
	100

The alternative control levels for ethylene dichloride-vinyl chloride plants differ in the degree to which the oxychlorination reactor is controlled. The reasons there was some question in selecting an emission limit for the oxychlorination reactor based on the established criteria for "best available control technology" and therefore the reasons alternative control levels are presented for the oxychlorination reactor, are discussed in the following paragraphs.

The fugitive emission controls which would be required in ethylene dichloride-vinyl chloride plants are the same for all alternative control levels. Data obtained from the industry indicate that several plants have controlled fugitive emissions to the degree required by the proposed standard through containment, capture, and ducting of the emissions to a control system and through early leak detection and repair. The level of control required by all alternatives for ethylene

dichloride purification and vinyl chloride formation and purification has been attained by at least one existing plant through incineration.

Incineration is also an applicable control method for the oxychlorination reactor. The oxychlorination reactor, however, has a large volume, low hydrocarbon concentration effluent gas stream, and relatively large quantities of fuel would be required for its combustion compared with combustion of the other two point sources of emissions. At most ethylene dichloride-vinyl chloride plants the oxychlorination reactor represents a relatively small source of emissions. Due to process variables, however, there is a wide range in the reported emissions from the oxychlorination reactor at the various plants from 0.5 to 46.3 kg/hr (1.2 to 103 lb/hr). Thus, at a few plants the oxychlorination reactor emissions are relatively large.

Thus, the first criterion for "best available control technology" was in question in selecting an emission limit for the oxychlorination reactor; i.e., are the energy costs of the control technology which would be required grossly disproportionate to the emission reduction which would be achieved? Three alternative control levels were identified for the oxychlorination reactor as follows:

1. Require no control of the oxychlorination reactor.

2. Establish the level of the standard for the oxychlorination reactor so that it can be met through control of process variables. In effect, only the plants with the relatively large emissions would have to institute controls.

3. Establish the level of the standard for the oxychlorination reactor so that all plants would have to install incineration or equivalent add-on control.

The environmental, energy and cost impacts of these alternatives are presented in detail in Chapters 6 and 7, respectively.

5.2 Polyvinyl Chloride Plants

Alternative control levels for polyvinyl chloride plants are presented only for plants manufacturing dispersion resins. Dispersion resin manufacture constitutes 13 percent of total polyvinyl chloride production. The sources of vinyl chloride emissions within typical polyvinyl chloride dispersion plants and their relative contributions to total uncontrolled emissions are shown below:

Emission Source	Percent of Total Uncontrolled Emissions at an Average Plant
(1) Fugitive Emission Sources	19
(2) Reactor Opening	3
(3) Relief Valve Discharge	4
(4) Stripper	20
(5) Monomer Recovery System	8
(6) Sources Following the Stripper (slurry blend tanks, concentrators, dryers, bulk storage, etc.)	46
	100

(Emission sources within other types of polyvinyl chloride plants are generally the same as those listed above for dispersion plants. The relative magnitude of emissions from each source in the other types of polyvinyl chloride plants can be found in Chapter 3.)

The alternative control levels for polyvinyl chloride dispersion plants differ only in the degree of control required for the process equipment following the stripper. For the other emission points listed above, the degree of control required by all the alternative

control levels for dispersion plants is the same as that required for the other types of polyvinyl chloride plants. In regard to the other emission sources, data indicate that several plants have demonstrated control of fugitive emissions through containment, capture, and ducting of the emissions to a control system, and early leak detection and repair. At least one plant has demonstrated effective control by using water to displace vinyl chloride from a piece of equipment, such as a reactor, to a control system before opening that piece of equipment to the atmosphere. Several plants have demonstrated that reactor relief discharges, which cause short-term peak emissions, can essentially be eliminated by measures such as injecting chemicals to stop a reaction or manually venting gases to a recovery system. Plants commonly recover the vinyl chloride emissions from strippers in a monomer recovery system. Carbon adsorption has been demonstrated as an effective add-on control system for application to the monomer recovery system. All of these control measures meet the established criteria for "best available control technology" without any question. The reasons there was some question in selecting an emission limit for the sources following the stripper in dispersion plants based on the established criteria for best available control technology, and therefore the reasons alternative control levels are presented for these sources, are discussed in the following paragraphs.

The emissions from the process equipment following the stripper in polyvinyl chloride plants can be controlled in two ways: (1) installation of add-on control devices such as incinerators or (2) stripping the vinyl chloride from the polyvinyl chloride resin before the resin is

processed. Under proper conditions, stripping can achieve the same degree of emission reduction as add-on control devices and is much less energy consuming and expensive.

Stripping technology has been used commercially at polyvinyl chloride plants in the past, but the technology has been designed to perform only to the extent necessary to recover raw materials for economic purposes rather than for emission reduction; i.e., the temperature, retention time, and the vacuum that have been applied are consistent with the economic recovery of vinyl chloride. More recently, as a result of the October 4, 1974, OSHA standard, polyvinyl chloride resin producers have been developing stripping technology to further reduce the vinyl chloride content in resins during the stripping operation in order to reduce in-plant emissions and to satisfy fabricator demands for resins which have low concentrations of vinyl chloride and thus do not cause the fabricators to be in violation of the OSHA standard. Based on information supplied to EPA by individual companies which have devoted time and resources to further develop stripping, it appears that technology is currently available to strip the majority of resins except dispersion resins to 400 ppm or lower. This same degree of control is achievable through add-on control devices.

Technology to strip residual vinyl chloride monomer from dispersion resins has not been developed to the same degree as for other resins for several reasons. First, information submitted to EPA under section 114 of the Act indicates that dispersion resins are

more difficult to strip with conventional techniques than other resins, because the higher temperatures which can be applied to other resins destroy the stability of dispersion resins and thus the quality of the product. Polyvinyl chloride producers have devoted more research and development time to improving conventional stripping for other resins than to developing new technology for dispersion resins, because dispersion resins represent only 13 percent of the total production. Furthermore, the incentive to improve stripping to satisfy fabricator demands for low-monomer content product does not exist for dispersion resins, because the product has always been low in monomer content as a result of loss of almost all of the residual monomer to the atmosphere during the drying operation which occurs after stripping. In general, the loss in drying dispersion resins is proportionately higher than in drying other resins. Based on this information, it appeared that best available control technology for dispersion resins may not be the same as for other resins.

EPA therefore attempted to determine the degree of stripping which could be accomplished for dispersion resins by best control technology. Section 112 requires existing plants to comply with a standard within 90 days of promulgation, but it provides for waivers of up to two years (two and a half years from proposal) for control if "steps will be taken during the period of waiver to assure that the health of persons will be protected from imminent endangerment." EPA therefore endeavored to determine the degree of control technology development that is likely over the next two and a half years. Under

the authority of section 114 of the Act, EPA requested information from the ten companies that manufacture dispersion resins regarding the degree to which these resins can be stripped with technology developed in the next two and a half years. Two of the companies do not plan to make dispersion resins in the future. Two of the companies responded that they could not reach levels below 6,000 ppm. However, some companies have devoted more time and resources to improve the effectiveness of stripping as an emission control measure than other companies. Three of the companies, which appeared to have devoted more time to research and development of stripping technology for dispersion resins, reported that they would be able to strip all resin grades to levels of 2,000 ppm or lower. One of these companies is already stripping each of its resin grades to this level and another of the companies is stripping some of its resin grades to this level. A fourth company, which did not make any predictions, is also stripping some of its resin grades to a level of 2,000 ppm. The predictions of the other two companies ranged between 4,000 and 6,000 ppm depending on the resin type. One company predicted that it would be able to strip dispersion resins down to 400 ppm in four years. Add-on control devices are capable of reducing emissions down to a level equivalent to stripping to 2,000 ppm. Add-on control devices cannot reduce total mass emissions from the equipment following the stripper in dispersion plants as low as they can in the manufacture of other resins, because in general these devices are capable of reducing the vinyl chloride concentration in an exit gas stream to essentially the same concentration regardless of the level of the incoming concentration. Because of the type of

dryer which is used in dispersion plants, the gas stream going into the control device at these plants would be much more diluted than at other plants.

Thus, the first criterion for "best available control technology" was in question in selecting an emission limit for the sources following the stripper in dispersion plants; i.e., what degree of control which has been in use in one or more plants would be generally adaptable for use at the plants subject to the standard within the time allowed for compliance under section 112. Add-on controls are currently available for the plants to use. However, since they would have large energy and economic impacts, improved stripping technology is the preferred method of control. Therefore, the question which remained was what degree of stripping technology is available for the plants to use. It should be noted that control by stripping differs from control by incineration or other add-on devices, in that with stripping it cannot be assumed that because one plant is stripping to 2000 ppm, that this technology can necessarily be readily transferred to other plants. Stripping technology has to be developed experimentally on an individual basis for the many resins. Based on this information, three alternative control levels were identified for the sources following the stripper in dispersion polyvinyl chloride plants as follows:

(1) Establish the level of the standard so that it is representative of stripping technology that is currently available for all grades of dispersion resins at all plants. Essentially, this would be equivalent to requiring no control of the emissions from sources following the stripper.

(2) Establish the level of the standard so that it is representative of stripping technology which has been achieved by one plant for all resin grades and by two plants for some resin grades, and is judged to be available for the remaining plants in two and a half years. This same degree of control can be attained with presently available add-on controls.

(3) Establish the level of the standard so that dispersion resins would have to be stripped to the same level as other resins. One company has predicted it can reach this level in four years. Add-on control technology is presently not available to attain this same degree of control.

The secondary environmental impacts do not differ much among the three alternatives presented above for dispersion resin plants, and the cost and energy impacts for one of the alternatives are not well-defined. Therefore, as opposed to the oxychlorination process, for which the first set of alternatives was presented in this chapter, secondary environmental and energy impacts were not a major part of the decision making process in selecting one of the three alternatives as an emission limit for dispersion resin plants. Thus, the selection of an emission limit for dispersion resin plants involved primarily a technical decision based on the availability of stripping technology. However, the environmental and cost impacts of these alternatives using both improved stripping and add-on controls are presented in detail in Chapters 6 and 7, respectively.

6. ENVIRONMENTAL IMPACTS OF THE ALTERNATIVE CONTROL LEVELS

The purpose of this chapter is to identify, quantify, and evaluate the positive and negative environmental impacts of the alternative control levels presented in Chapter 5 for ethylene dichloride-vinyl chloride and polyvinyl chloride dispersion plants. For polyvinyl chloride plants other than those making dispersion resins, there are no alternative control levels and the impacts of the control level of the proposed standard are presented. It should be noted that other types of alternatives and their impacts are discussed in other chapters. Alternative regulatory strategies are discussed in Chapter 2. These include setting no standards, setting standards under other authorities (instead of section 112) of the Clean Air Act, prohibiting all emissions of vinyl chloride, setting standards for source categories in addition to ethylene dichloride-vinyl chloride and polyvinyl chloride plants, etc. Alternative control systems (solvent absorption, incineration, etc.) are identified in Chapter 4. Alternative ways of writing and enforcing the level of the proposed standard and other pollutants considered for regulation are discussed in Chapter 8.

Identified in Chapter 4 are eight or more control systems which can be used to reduce vinyl chloride emissions in ethylene dichloride-vinyl chloride and polyvinyl chloride plants. As described in Chapter 3, there are a number of emission points both in ethylene dichloride-vinyl chloride and polyvinyl chloride plants, each of which can be controlled by one of several control systems described in Chapter 4. In addition, there are four or more types of processes in the polyvinyl chloride

industry, and these process types vary with regard to the number of emission points and the control systems which are applicable. Due to the complexity of the situation created by the variety of emission points and control systems, this section is divided into two parts. The first part describes the secondary environmental impacts of individual control systems. (The primary impact, or the reduction in vinyl chloride emissions, for each control system is described in Chapter 4.) The second part describes the primary and secondary environmental impacts which would result from model plants using a selected combination of control measures to attain the alternative control levels (for ethylene dichloride-vinyl chloride and polyvinyl chloride dispersion plants) or the level of the proposed standard (for other types of polyvinyl chloride plants). The second part also compares the incremental quantities of pollutants generated and energy consumed as the result of applying control measures with the quantities of pollutants generated and energy consumed by unregulated plants.

6.1 Secondary Envirormental Impacts of Individual Control Systems

The secondary environmental impacts which have been identified for individual control systems applied to ethylene dichloride-vinyl chloride and polyvinyl chloride plants are identified in Table 6-1.

For the fugitive emission control techniques the secondary impacts are relatively minor. These include increased electric power usage for monitoring systems and increased fuel consumption for steam to be used in stripping vinyl chloride from process water. The quantities of energy used depend on the type and size of plant

TABLE 6-1. SECONDARY ENVIRONMENTAL IMPACTS OF INDIVIDUAL CONTROL SYSTEMS

CONTROL SYSTEMS	SECONDARY ENVIRONMENTAL IMPACTS			
	AIR IMPACT	WATER IMPACT	SOLID WASTE IMPACT	ENERGY CONSUMPTION
FUGITIVE EMISSION[1] CONTROLS (monitoring system and water stripper				Increased power and fuel consumption
GASHOLDER/WATER PURGE SYSTEM		Increased water consumption and increased vinyl chloride in the inprocess wastewater.		Increased power consumption
RELIEF VALVE CONTROLS				Increased power consumption
REFRIGERATION				Increased power consumption
REACTOR SOLVENT CLEANING	Small amounts of solvent may be released to atmosphere.	Some of the solvent may be discharged to the inprocess wastewater.	The solvent is recycled. The amount of solid material collected is the same whether a reactor is hand-cleaned or solvent-cleaned.	Increased power consumption
IMPROVED SLURRY STRIPPING		Increased water usage for steam, and increased vinyl chloride in the inprocess wastewater.		Increased fuel consumption for steam
SOLVENT ABSORPTION	Small amounts of solvent may be released to atmosphere.		The solvent is recycled. The vinyl chloride is stripped out and recovered.	Increased power consumption
CARBON ADSORPTION		Increased water usage for steam desorption and increased vinyl chloride in the inprocess wastewater.	The carbon is continuously desorbed and reused but it is estimated that it may have to be replaced every 1 to 3 years.	Increased fuel consumption Increased power consumption
INCINERATION (WITHOUT SCRUBBER)	Hydrogen chloride; nitrogen oxides			Increased fuel consumption
INCINERATION (WITH WATER SCRUBBER)	Hydrogen chloride; nitrogen oxides	Increased water usage; increased vinyl chloride in inprocess wastewater; hydrogen chloride in water decreases pH to approximately 1.		Increased power consumption Increased fuel consumption

[1]Most of the fugitive emission controls (except the two indicated) in themselves have no impacts. However, if captured fugitive emissions are transferred to a control device instead of being recovered, the control of captured figitive emissions will have the impacts already listed for the various control devices.

where the equipment is employed. Also, the proposed standard specifies that all captured fugitive emissions must be recovered in a monomer recovery system or controlled to a level of 10 ppm by incineration, carbon adsorption, solvent absorption, or equivalent. If the captured fugitive emissions were ducted to a control system, there would be the additional secondary impacts which are identified for each of these systems.

The secondary environmental impacts of the gasholder/water purge system used to control emissions from opening of polyvinyl chloride plant reactors include increased water usage, an increase in the quantity of vinyl chloride released into the inprocess wastewater, and relatively minor increases in energy consumption. The regulations for relief valve discharges could cause some increased power consumption for improved instrumentation to detect dysfunction in process equipment. Use of refrigeration as a control technique requires some increased energy consumption.

Reactor solvent cleaning with tetrahydrofuran (THF) can conceivably cause small quantities of solvent to be released into the atmosphere, although this has not been quantified. Also, some loss of solvent to water has been reported by one plant (4.54 kg/batch)[14] and some incremental increase in energy consumption would be expected. This control technique is used by plants primarily to reduce employee exposure to vinyl chloride by eliminating the necessity for employees removing by hand unwanted hardened resin from reactors between batches. The solid material is separated from the solvent in a distillation column subsequent to reactor cleaning and is sold

or discarded in a landfill just as it would be if the reactors were hand-cleaned. The solvent is recycled. Therefore, there is no positive or negative impact of reactor solvent cleaning on solid waste disposal.

The secondary environmental impacts from using improved slurry stripping include increased water usage for steam, increased vinyl chloride released into the inprocess wastewater, and increased fuel consumption to convert the water into steam. Primary stripping, which is already used by most plants and consists of raising the temperature of the stripping operation to 75°C (167°F), requires 3,000 -4,000 kilograms of steam per 10,000 kilograms of product. Improved stripping, which would be used as an abatement technique and consists of maintaining the stripping operation at 75°C (167°F), is expected to require an additional 1,500 -2,000 kilograms of steam per 10,000 kilograms of product. The steam used for stripping is condensed and discharged as wastewater. The amount of vinyl chloride released into the inprocess wastewater is expected to be proportional to the amount of steam used, and thus would be increased by improved stripping. If the steam is used in a jacket surrounding the stripper instead of being sparged through the stripper contents, it would not be expected to increase the vinyl chloride released into the inprocess wastewater since it would not come into contact with resin or vinyl chloride.

Solvent absorption used to control emissions such as from monomer recovery systems in polyvinyl chloride plants would cause an increase in power consumption. The vinyl chloride collected in the

solvent would be stripped out in a solvent stripper and recovered for reuse, and the solvent would be recycled through the absorption unit. Small amounts of solvent could conceivably be lost to the atmosphere, although this has not been quantified.

The secondary environmental impacts of carbon adsorption include increased power consumption, increased water consumption, increased fuel consumption to convert the water to steam for desorption, and possibly increased quantities of vinyl chloride released into the inprocess wastewater. Although the carbon in an adsorption bed is continually desorbed and recycled, there may also be some solid waste impact from using carbon adsorption. The only available information on carbon adsorption in the ethylene dichloride-vinyl chloride and polyvinyl chloride industries is from pilot studies and from one unit which was recently installed (1975) at a polyvinyl chloride plant. Therefore, it is unknown at this time what the bed-life of the carbon used in adsorption applied at these plants will be or whether the carbon will be regenerable. If polymerization occurs on the carbon, the polymer could be burned off and the carbon recycled. If characteristics of the carbon, such as the large surface-to-volume ratio, which make it desirable for adsorption are destroyed, however, it must be replaced. It is possible that the carbon in adsorption devices will have to be replaced every 1 to 3 years. In this case, the used carbon would probably be taken to a land-fill for disposal. It could also be burned in a boiler as a low sulfur fuel. If the carbon contained some chlorinated hydrocarbons, however, burning may cause some hydrogen chloride emissions.

The major secondary environmental impacts identified for control by incineration are hydrogen chloride emissions and increased energy consumption. Hydrogen chloride is generated when chlorinated hydrocarbons are incinerated. At the present time, only a few plants incinerate chlorinated hydrocarbons, and in most cases this involves incineration of liquid waste materials at ethylene dichloride-vinyl chloride plants. When incineration is practiced to control vinyl chloride emissions, 0.58 kilogram of hydrogen chloride is produced for each kilogram of vinyl chloride combusted. Depending on the type of polyvinyl chloride process, the amount of hydrogen chloride generated ranges between 0.68 and 1.97 kilograms per 100 kilograms of polyvinyl chloride resin produced. From a typical ethylene dichloride-vinyl chloride plant, incineration would produce approximately 1.11 kilograms of hydrogen chloride per 100 kilograms of vinyl chloride produced. A large proportion (90 percent) of the hydrogen chloride from an ethylene dichloride-vinyl chloride plant incinerating the emissions from all point sources within the plant would be produced from combustion of the chlorinated hydrocarbons other than vinyl chloride present in the gas streams. Typically, as described in Chapter 4, the hydrogen chloride emissions generated by the incinerator are scrubbed with water or caustic; however, EPA has no regulations for hydrogen chloride which force the use of an absorption unit for this purpose. Therefore, later sections in this chapter quantify emissions of hydrogen chloride with and without scrubber control. Using a scrubber to control the hydrogen chloride emissions increases water usage and increases power consumption. If a caustic scrubber is not used or the hydrogen chloride is not recovered from the

scrubber water, the pH of the plant effluent would be lowered. The wastewater from the scrubber may contain some vinyl chloride, although the quantity would be small due to the low solubility of vinyl chloride in water.

6.2 Primary and Secondary Environmental Impacts at Model Plants

Quantified in the following paragraphs are the primary and secondary environmental impacts which would result from model plants attaining the alternative control levels identified in Chapter 5 (for ethylene dichloride-vinyl chloride and polyvinyl chloride dispersion plants) and the level of the proposed standard (for other types of polyvinyl chloride plants). For each of the control levels, a combination of the control systems identified in Table 6-1 has been selected for abatement of emissions from various points in a model plant. The model plants consist of both plants that are average in size and those that are larger than average; the latter are presented to approximate "worst-case" situations.

6.2.1 Primary Environmental Impacts

The purpose of this section is to quantify the degree to which each control level reduces mass emissions of vinyl chloride and ambient concentrations of vinyl chloride.

6.2.1.1 Mass Emissions

The mass emission rates of vinyl chloride from average-sized and large model plants attaining various control levels are quantified in Table 6-2. For purposes of comparison, the mass emission rates from unregulated model plants are also shown. These unregulated emission rates are based on data obtained from the industry in the spring of 1974.

TABLE 6-2. VINYL CHLORIDE MASS EMISSION REDUCTION[1-3]

MODEL PLANTS (SIZE)	UNREGULATED	ALTERNATIVE I		ALTERNATIVE II/PROPOSED STANDARD		Alternative III	
	Emissions - Kg/Hr (Lb/Hr)	Emissions- Kg/Hr (Lb/Hr)	Percent Emission Reduction	Emissions - Kg/Hr (Lb/Hr)	Percent Emission Reduction	Emissions - Kg/Hr (Lb/Hr)	Percent Emission reduction
Ethylene Dichloride - Vinyl Chloride Plant - Avg (318 MM kg/yr or 700 MM lb/yr)	176 (392)	19 (42)	90	10 (23)	94	5 (12)	97
Ethylene Dichloride - Vinyl Chloride Plant-Large (590 MM kg/yr or 1300 MM lb/yr)	328 (728)	35 (78)	90	23 (52)	94	10 (23)	97
Polyvinyl Chloride Suspension - Dispersion Plant - Avg. (45 MM kg/yr or 100 MM lb/yr - 14 MM kg/yr or 30 MM lb/yr)	322 (716)	60 (133)	81 - total plant (52 - dispersion process only)	16 (36)	95 - total plant (95 - dispersion process only)	12 (25)	96 - total plant (97 - dispersion process only)
Polyvinyl Chloride Suspension - Dispersion Plant - Large (112 MM kg/yr or 250 MM lb/yr - 45 MM kg/yr or 100 MM lb/yr)	899 (1976)	190 (423)	81 - total plant (52 - dispersion process only)	45 (100)	95 - total Plant (95 - dispersion process only)	36 (80)	96 - total plant (97 - dispersion process only)
Polyvinyl Chloride Suspension Plant - Avg (68 MM kg/yr or 150 MM lb/yr)	330 (735)	-	-	16 (36)	95	-	-
Polyvinyl Chloride Suspension Plant - Large (159 MM kg/yr or 350 MM lb/yr)	772 (1715)	-	-	38 (85)	95	-	-
Polyvinyl Chloride Bulk Plant - Avg. (45 MM Kg/yr or 100 MM lb/yr)	136 (301)	-	-	5 (11)	96	-	-
Polyvinyl Chloride Bulk Plant - Large (77 MM kg/yr or 170 MM kg/yr)	230 (512)	-	-	9 (19)	96	-	-
Polyvinyl Chloride Solution Plant - Avg (11 MM kg/yr or 24 MM lb/yr)	24 (53)	-	-	0.5 (1)	98	-	-

[1] Unregulated emissions based on data submitted to EPA in the spring of 1974.

[2] The reduction in fugitive emissions cannot be quantified and is based on judgment.

[3] Assumes plant operates 8000 hr/yr

The alternative control levels for ethylene dichloride-vinyl chloride plants represent three different degrees of emission reduction for the oxychlorination reactor: (1) no control, (2) controlling process variables, and (3) control by incineration or equivalent. The alternatives range in the degree to which they reduce emissions from the entire model plant from 90 to 97 percent. The range is relatively small because the oxychlorination reactor represents only about 8 percent of the total emissions at an average plant.

The alternative control levels for the polyvinyl chloride dispersion plant represent three different degrees of emission reduction for the emission sources which follow the stripping operation in the flow of materials through the plant: (1) stripping to a level which has currently been achieved for all grades of all dispersion resins at all plants (2) stripping to a level which in EPA's judgment will be available for all grades of dispersion resins within the maximum time allowed for compliance, and (3) stripping to the same level as required for other resins. Because dispersion resins are typically produced at plants which also produce other types of resins, the emission rates presented in Table 6-2 for the alternative control levels are actually from a model combination suspension-dispersion plant. Since there are no alternative control levels for the production of other types of resins, each of the alternative control levels for the combination plant represents a 95 percent emission reduction in the suspension part of the plant. The emission reduction for the dispersion part of the plant ranges from 52 to 97 percent, depending on the alternative control level. The variation in emissions due to the alternative

control levels for the dispersion part of the plant would cause the reduction in emissions from the combination plant to range between 81 and 96 percent. Alternative II would result in a 95 percent reduction in emissions from the dispersion part of the plant and from the combination plant.

As stated before, there are no alternative control levels for the production of polyvinyl chloride resins other than dispersion resins. Therefore, Table 6-2 presents the emission reductions which would be achieved by the proposed standard for these other types of resins. The emission reduction is 95 percent or greater in all cases.

For both ethylene dichloride-vinyl chloride and polyvinyl chloride plants, it is assumed that the alternative control levels/ proposed standard would reduce fugitive emissions by 90 percent. The actual reduction in fugitive emissions which would be achieved cannot be quantified. However, it appears reasonable to assume that the application of best available control technology for each known fugitive emission source would achieve a 90 percent reduction in emissions.

6.2.1.2 Ambient Concentrations

Diffusion model calculations were applied to the mass emission rates in Table 6-2 to determine the impact of the alternative control levels (for ethylene dichloride-vinyl chloride and polyvinyl chloride dispersion plants) and the proposed standard (for polyvinyl chloride plants other than those making dispersion resins) on ambient concentrations of vinyl chloride in the vicinity of average-sized and large model plants. For purposes of comparison, diffusion modeling was also used to

calculate ambient concentrations of vinyl chloride resulting from unregulated emissions. The ambient concentrations were calculated in terms of five-minute averages, 24-hour averages, and annual averages. The expected ambient concentrations of vinyl chloride in the vicinity of unregulated and regulated plants can be found in Tables 6-3, 6-4, and 6-5.

Versions C8M3D and C5MCL of a diffusion model were used for calculating the estimated concentrations presented in this report. C8M3D was used for the annual and 24 hour estimates, and is based upon the sector-averaging technique of the EPA Air Quality Display Model; this technique utilizes the univariate Gaussian distribution in each of 16 sectors (22.5 degrees each) around the horizon. C5MCL, used for the 5 minute estimates, is program C8M3D with only a few programming changes which provide concentrations appropriate to the bivariate Gaussian distribution. The models were used in the modes which simulate a rural environment consisting of relatively flat land.

Each facility evaluated, be it an average or large plant, is assumed to cover a 100 square meter area. Fugitive losses are assumed to occur homogeneously over this area at 6 meters above ground. All point-source emissions (e.g., dryer vents, etc.) are assigned to one location at the center of the facility, although a stack height is assigned to each such source.

Briggs' buoyant plume rise formulae are available as a subroutine in the computer programs. These formulae are used in cases when the analyst determines that significant plume rise might

TABLE 6-3. REDUCTIONS IN VINYL CHLORIDE AMBIENT CONCENTRATIONS - ESTIMATED BY DIFFUSION MODELING - 5-MINUTE AVERAGE MAXIMA[1]

MODEL PLANTS (SIZE)	AMBIENT AIR CONCENTRATIONS (5-MINUTE AVERAGE MAXIMA - PPM)			
	UNREGULATED	ALTERNATIVE I	ALTERNATIVE II/PROPOSED STANDARD	ALTERNATIVE III
Vinyl Chloride Plant - Avg. (318 MM kg/yr or 700 MM lb/yr)	8.7	2.1[2]	1.5	0.38
Vinyl Chloride Plant- Large (590 MM kg/yr or 1300 MM lb/yr)	16	3.9[2]	2.8	0.71
Polyvinyl Chloride Suspension - Dispersion Plant Avg.; (54 MM kg/yr or 120 MM lb/yr - 14 MM kg/yr or 30 MM lb/yr)	7100[3]	38	5.3	2.6
Polyvinyl Chloride Suspension - Dispersion Plant - Large (112 MM kg/yr or 250 MM lb/yr/45 MM kg/yr or 100 MM lb/yr)	7400[3]	89	12	6.1
Polyvinyl Chloride Suspension Plant - Avg. (68 MM kg/yr or 150 MM lb/yr)	7100[3]	-	6.2	-
Polyvinyl Chloride Suspension Plant - Large (159 MM kg/yr or 350 MM lb/yr)	7500[3]	-	14.0	-

[1]The plants were evaluated for neutral, slightly stable, and moderately stable atmospheric conditions. A wind speed of 0.5 mps was used. Receptors were assumed to be located at 80 m intervals from the center of the plant. Effective height of emissions was at stack height. Fugitive emissions were treated as 100 x 100 m area sources at 6 m above ground. Other sources were all treated as point sources, located at the center of the area source.

[2]The emissions for Alternative I are based on the plant with the largest emission factor for the oxychlorination process. This is the one plant which would have to install additional control to attain Alternative II control level.

[3]It was assumed that 2,250 kg (5000 lb) of vinyl chloride were released to the atmosphere during the 5-minute period from a reactor relief valve discharge.

TABLE 6-4. REDUCTIONS IN VINYL CHLORIDE AMBIENT CONCENTRATIONS - ESTIMATED BY DIFFUSION MODELING - 24-HOUR AVERAGE MAXIMA[1]

MODEL PLANTS (SIZE)	AMBIENT AIR CONCENTRATIONS (24-HOUR AVERAGE MAXIMA - PPM)			
	UNREGULATED	ALTERNATIVE I	ALTERNATIVE II/PROPOSED STANDARD	ALTERNATIVE III
Vinyl Chloride Plant - Avg. (318 MM kg/yr or 700 MM lb/yr)	0.97	0.12[2]	0.094	0.094
Vinyl Chloride Plant - Large (590 MM kg/yr or 1300 MM lb/yr)	1.8	0.22[2]	0.17	0.17
Polyvinyl Chloride Suspension - Dispersion Plant - Avg. (54 MM kg/yr or 120 MM lb/yr/14 MM kg/yr or 30 MM lb/yr)	11	1.7	0.29	0.22
Polyvinyl Chloride Suspension - Dispersion Plant - Large (112 MM kg/yr or 250 MM lb/yr/45 MM kg/yr or 100 MM lb/yr)	27	4.0	0.68	0.51
Polyvinyl Chloride Suspension Plant - Avg. (68 MM kg/yr or 150 MM lb/yr)	10	-	0.30	-
Polyvinyl Chloride Suspension Plant - Large (159 MM kg/yr or 350 MM lb/yr)	23	-	0.70	

[1]The plants were evaluated for neutral, slightly stable, and moderately stable atmospheric conditions. A wind speed of 0.5 mps was used. Receptors were assumed to be located at 80-m intervals from the center of the plant. Effective height of emissions was at stack height. Fugitive emissions were treated as 100x100 m area sources at 6 m above ground. Other sources are all treated as point sources, located at the center of the area source.

[2]The emissions for Alternative I are based on the plant with the largest emission factor for the oxychlorination process. This is the one plant which would have to install additional control to attain Alternative II control level.

TABLE 6-5. REDUCTIONS IN VINYL CHLORIDE AMBIENT CONCENTRATIONS - ESTIMATED BY DIFFUSION MODELING-ANNUAL AVERAGE MAXIMA[1]

MODEL PLANTS (SIZE)	AMBIENT AIR CONCENTRATIONS (ANNUAL AVERAGE MAXIMA - PPM)			
	UNREGULATED	ALTERNATIVE I	ALTERNATIVE II/PROPOSED STANDARD	ALTERNATIVE III
Vinyl Chloride Plant - Avg. (318 MM kg/yr or 700 MM lb/yr)	0.17	0.019[2]	0.016	0.015
Vinyl Chloride Plant - Large (590 MM kg/yr or 1300 MM lb/yr)	0.32	0.035[2]	0.030	0.028
Polyvinyl Chloride Suspension - Dispersion Plant - Avg. (54 MM kg/yr or 120 MM lb/yr/14 MM kg/yr or 30 MM lb/yr)	0.60	0.10	0.038	0.037
Polyvinyl Chloride Suspension - Dispersion Plant - Large (112 MM kg/yr or 250 MM lb/yr/45 MM kg/yr or 100 MM lb/yr)	1.4	0.24	0.090	0.088
Polyvinyl Chloride Suspension Plant - Avg. (68 MM kg/yr or 150 MM lb/yr)	0.75	-	0.051	-
Polyvinyl Chloride Suspension Plant - Large (159 MM kg/yr or 350 MM lb/yr)	1.8	-	0.12	-

[1]The plants were evaluated using meteorological data from Houston, Texas. Receptors were assumed to be located at 80 m intervals from the center of the plant. Effective height of emissions was the stack height. Fugitive emissions were treated as 100 x 100 m area sources at 6 m above ground. Other sources are all treated as point sources, located at the center of the area source.

[2]The emissions for Alternative I are based on the plant with the largest emission factor for the oxychlorination process. This is the one plant which would have to install additional control to attain Alternative II control level.

occur. Otherwise, the stack height usually was used as the effective height of emission; in one case, a non-buoyant jet plume was assigned a fixed, non-zero plume rise.

The meteorological and source variables required for executing the programs are as follows:

(a) Wind direction, wind speed, and atmospheric stability for the meteorological condition(s) to be evaluated.

(b) Source variables

(1) Stack height (height of emission).

(2) Effluent temperature and effluent volume flow rate; or effluent temperature, effluent velocity, and stack diameter; or an assigned fixed plume rise.

(3) Afternoon mixing depth (assigned a value of 1500 meters in these analyses; hence, reflection is negligible).

(4) Source coordinates (in units of the programmed grid system).

(5) Width of square area source (a value of 0.0 denotes point sources).

(6) Emission rate.

(7) Half-life pollutant (assumed infinite for vinyl chloride and hydrogen chloride).

(8) Various program-control parameters.

A total of at least 119 data records (i.e., 119 lines or 119 punched cards) are required for each job on the computer. About 300 computer jobs were required for this task. Listing the input data would thus require about 600 pages; therefore, they cannot be included in this report.

Table 6-6 presents the compounding effects of a cluster of plants within 5000 meters of each other on ambient concentrations of vinyl chloride. The plant cluster used for the modeling is patterned on a real plant cluster, and consists of one polyvinyl chloride and three ethylene dichloride-vinyl chloride plants. A map showing the relationship of these four plants to each other and the distances among them is shown in Figure 6-1. The two cases presented in Table 6-6 differ only in the sizes of plants used in the model. In the first case, the plant sizes approximate the sizes of the plants in the real plant cluster. The polyvinyl chloride plant has a production rate of 122 million kg/yr (270 million lb/yr) and the three ethylene dichloride-vinyl chloride plants have production rates of 68 million kg/yr (150 million lb/yr), 118 million kg/yr (260 million lb/yr), and 375 million kg/yr (825 million lb/yr). In the second case, the plant sizes are the same as the model plants used for the calculations in Tables 6-3, 6-4, and 6-5. There are two average-sized and one large model ethylene dichloride-vinyl chloride plants and one large model polyvinyl chloride combination suspension-dispersion plant. For all cases, ambient concentrations were calculated on the basis of unregulated and regulated emissions.

The purpose of doing the diffusion model calculations for the plant cluster was to illustrate the degree to which locating plants in close proximity to each other would increase the projected maximum concentration of vinyl chloride in the vicinity of any one plant. To achieve this purpose, it was unnecessary and unduly time-consuming to do the diffusion model calculations for all the

Table 6-6. VINYL CHLORIDE AMBIENT CONCENTRATIONS - CLUSTER OF FOUR ETHYLENE DICHLORIDE - VINYL CHLORIDE AND POLYVINYL CHLORIDE PLANTS[1] - 5 MINUTE, 24-HOUR AND ANNUAL AVERAGE MAXIMA - UNREGULATED AND REGULATED

CASE[1]	SITUATION	VINYL CHLORIDE CONCENTRATION - ppm		
		5- Min. Average Max.	24-Hour Average Max.	Annual Average Max.
I	UNREGULATED	7100[2]	11.0	0.61
	MEETING THE PROPOSED STANDARD	1.3	0.31	0.051
II	UNREGULATED	7600[2]	25.0	1.5
	MEETING THE PROPOSED STANDARD	3.1	0.59	0.099

[1] The sizes and relationships of these plants are shown in Figure 6-1 for Case I and in Figure 6-2 for Case II.

[2] It was assumed that 2,250 kg (5000 lb) of vinyl chloride were released to the atmosphere during the 5-minute period from a reactor relief valve discharge.

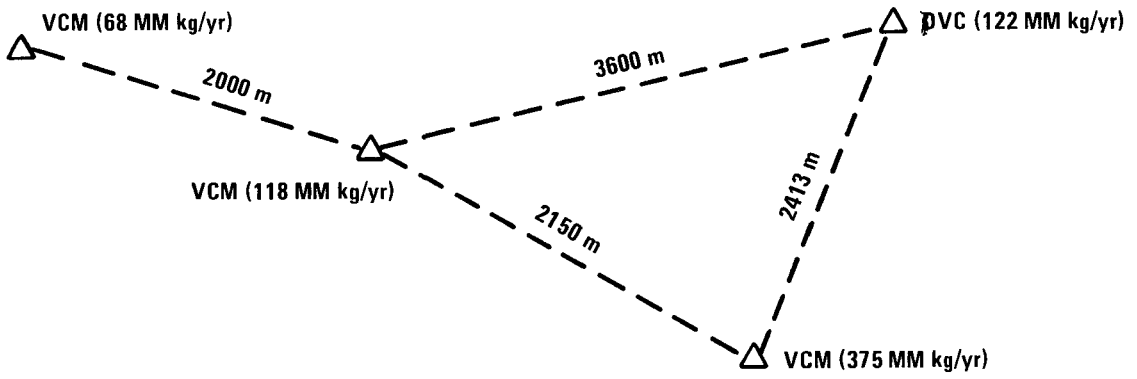

Figure 6-1. Map of four plant cluster - Case I.

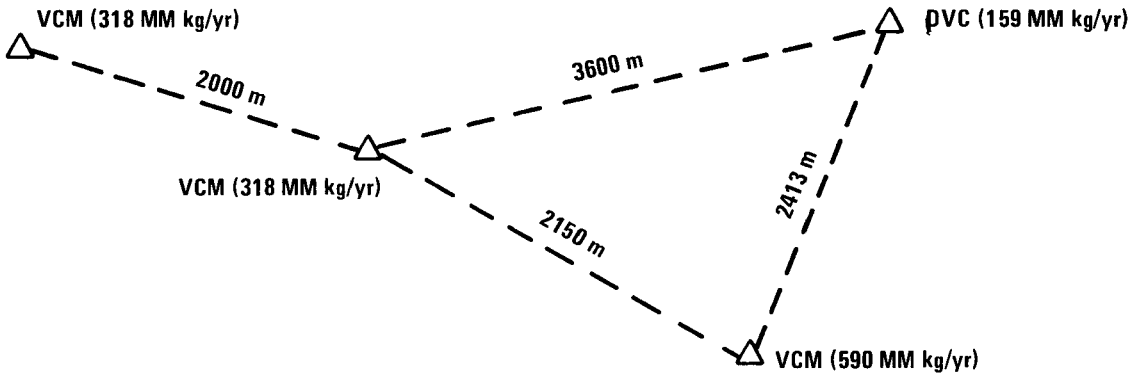

Figure 6-2. Map of four plant cluster - Case II.

alternatives. Thus, calculations for the regulated emissions were done only for Alternative II for ethylene dichloride plants, Alternative II for polyvinyl chloride dispersion resin manufacture, and the proposed standard for polyvinyl chloride suspension resin manufacture.

All of the values in Tables 6-3 through 6-6 represent the point of maximum concentration. In other words, if ambient samplers were placed so that they covered all of the ground space around a plant, the numbers in the tables represent the sampler location with the highest concentration which would be measured. In calculating the ambient concentrations, realistic "worst case" meteorological conditions were used. In order to determine the worst case meteorological conditions for the 5-minute and 24-hour averaging times the modeling calculations were conducted for each situation using different atmospheric stability conditions. These included neutral, slightly stable, and moderately stable. A wind speed of 0.5 mps was used in all cases. For the annual averaging time, actual meteorological data from Houston, Texas were used.

For both ethylene dichloride-vinyl chloride and polyvinyl chloride plants, fugitive emissions comprise a significant proportion of the total emissions. The relative contributions of an area source and a point source to the maximum ambient concentration can vary considerably, depending on the stability class, the averaging time, and the point source plume rise used for a given case. An area source among point sources may dominate ambient annual and 24-hour maximum concentrations, but be a minor contributor to the 5-minute maximum concentration, even

though emissions do not change. This is due to the plane geometry of the diffusion of emissions from the source as viewed from the receptor, and due to the increasing variability of meteorological conditions as time increases.

As explained in Chapter 2, there is no known threshold level of effects for vinyl chloride. The Occupational Safety and Health Administration promulgated a standard of 1 ppm (8-hour average) and 5 ppm (15-minute average) for worker exposure, but this standard is not based on a threshold level of effects. Since there is no yardstick against which to compare the ambient modeling results in Tables 6-3 through 6-6, only the relative magnitude of the results when compared with each other is discussed here.

In comparing the ambient concentrations for the different alternative control levels, it is important to remember that the numbers in the tables represent the maximum concentrations only. The relative difference between the ambient concentrations for two given alternatives may be greater or less at the point of maximum concentration than at some other point at a different distance from the source. The alternative control levels for ethylene dichloride-vinyl chloride plants, for example, differ only in the degree to which one of several emission points is controlled. The relative difference in the maximum ambient concentrations for the alternative control levels therefore depends on how much that particular emission point contributes to the maximum concentration. If the meteorological conditions selected to obtain the maximum concentration are such that the area source (fugitive emissions) is a much greater contributor to the maximum concentration than are the

point sources, a change in the emissions from the one point source may make little difference in the maximum ambient concentration. It would be expected, however, to make a difference in the concentrations found at some other distances from the plant.

In reviewing the results for the alternative control levels for ethylene dichloride-vinyl chloride plants, it is found that there is a greater difference between the 24-hour average maximum ambient concentrations for Alternatives I and II than for Alternatives II and III. The opposite is true for the 5-minute average maximum ambient concentrations. The emissions used in the model for Alternative I are based on the emission factor for the oxychlorination reactor at the one plant which would have to implement substantial control for that process to attain the emission level of Alternative II. In other words, the difference in the concentrations for Alternatives I and II is that difference which would occur for only one plant if Alternative II were adopted as the proposed standard for the oxychlorination reactor. This is because the other plants are already essentially attaining the emission level required by Alternative II for the oxychlorination reactor. Requiring all plants to control the oxychlorination reactor to the level achievable by incineration (Alternative III) would result in lower 5-minute average maximum ambient concentrations but would make little difference in the maximum 24-hour average ambient concentrations.

In reviewing the results for the alternative control levels for polyvinyl chloride combination suspension-dispersion plants, it is found that there is a much larger difference between the maximum concentrations for Alternatives I and II than for

Alternatives II and III. Requiring that emissions from the sources following the stripping operation for dispersion resins be reduced to a level equivalent to stripping to 2000 ppm (Alternative II) would achieve a twenty-fold improvement in the maximum 24-hour average ambient concentration at an average plant (from 4.0 to 0.29ppm) compared with requiring no control of the sources following the stripping operation (Alternative I). In comparison, requiring that emissions from the sources following the stripping operation for dispersion resins be reduced to the level of the proposed standard for other resins [equivalent to stripping to 400 ppm (Alternative III)] would result in a relatively small additional reduction in the ambient concentration at an average plant (from 0.29 to 0.22 ppm 24-hour average). For polyvinyl chloride suspension plants, the proposed standard would also achieve a twenty-fold improvement in the 24-hour average maximum concentration (from 10 to 0.30 ppm).

In Table 6-6 the maximum ambient concentrations calculated for the plant cluster occur in the vicinity of the polyvinyl chloride plant in both cases, because it is the largest source of emissions in the cluster. The data in the table indicate that the maximum ambient concentration for a model polyvinyl chloride plant is not significantly increased when that plant is located in this particular plant cluster with three ethylene dichloride-vinyl chloride plants. This does not necessarily mean, however, that the average ambient concentrations at other locations around the plants would not be increased by the effect of the cluster. It also does not necessarily mean that the maximum concentration for either type of plant would not

be increased by another type of cluster such as one containing four large polyvinyl chloride plants.

6.2.1.3 Possible Transformations in Ambient Air[1]

No results on the reactions and rates of disappearance of vinyl chloride from the ambient atmosphere are available at present. Limited laboratory studies on the stability and persistence of vinyl chloride in air have, however, been completed.

Vinyl chloride vapor concentrations in containers of various materials appear to be essentially constant over periods of many days. The peak absorption of vinyl chloride in the ultraviolet region is far below the solar cutoff (around 290 nm), so that vinyl chloride would not undergo reaction in sunlight in the absence of other reactive chemical species. When irradiated with simulated solar radiation in the presence of nitrogen oxides (nitric oxide and nitrogen dioxide), vinyl chloride in the parts per million concentration range does react to form a variety of products. The reaction products identified include ozone, nitrogen dioxide, carbon monoxide, formaldehyde, formic acid, formyl chloride, and hydrogen chloride.

Although vinyl chloride should disappear significantly in traveling over longer distances, the conversions anticipated within a few kilometers downwind of emission sources would be small. No mechanism is presently known for removal of vinyl chloride from the air at night. Biological sinks, such as microbiological removal in soil, may be of significance in depletion of vinyl chloride over long time periods, but such sinks would not be expected to be

important in terms of urban scale transport of vinyl chloride. Thus, for a first approximation, vinyl chloride in the immediate vicinity of vinyl chloride emission sources can be considered a stable pollutant. The usual meteorological dispersion equations can thus be applied to approximate concentrations in the vicinity of emission sources. Because of strong nocturnal inversions during the fall and winter, build-up of vinyl chloride from emission sources might be of particular concern during such periods. There are, however, no data on this.

6.2.2 Secondary Environmental Impacts

The secondary environmental impacts, or the environmental impacts resulting from use of the control systems to attain the level of the proposed standard and alternative control levels, are discussed in the following paragraphs. Two factors should be remembered when reviewing this section.

First, the secondary impacts for ethylene dichloride-vinyl chloride plants attaining the level of control of Alternative II are not presented because they would vary for individual plants, depending on the type of control used for the oxychlorination reactor. For individual plants, control of the oxychlorination reactor to attain the emission level of Alternative II could range from no control to a process change to incineration. Therefore, the secondary impacts for Alternative II could range between that of Alternative I, which represents no control of the oxychlorination reactor, to that of Alternative III, which represents incineration of the emissions

from the oxychlorination reactor. Data are unavailable on the secondary impacts of controlling process variables, but they are expected to be negligible. Most existing plants can attain the Alternative II control level without additional control of the oxychlorination reactor; however, one existing plant would possibly have to use incineration.

Second, there are two types of control technology which polyvinyl chloride plants can use to achieve the second alternative control level for polyvinyl chloride dispersion resins and the proposed standard for the other types of polyvinyl chloride resins: (1) improved stripping and (2) add-on controls such as incineration. Environmental impacts are presented for both types of control technology. The improved stripping option is sometimes referred to as Case A and the incineration option is sometimes referred to as Case B. Case A and Case B are equivalent in terms of the level of control achieved, and thus have the same primary impact.

6.2.2.1 Air Impact

The major secondary air impact of the control equipment which could be used to meet the proposed standard and alternative control levels for vinyl chloride is the production of hydrogen chloride from control by incineration.

Hydrogen chloride is a hygroscopic, colorless gas with a strong, pungent, and irritating odor. Because of its high solubility in water, the gas fumes in moist air. An aqueous solution of hydrogen

chloride is called hydrochloric acid. Emissions of hydrogen chloride are readily converted to hydrochloric acid fumes and droplets in air or when inhaled into the lungs. The strong dehydrating properties of hydrogen chloride can result in serious burns of the skin or mucous membranes. Hydrochloric acid is extremely corrosive to most materials.[2]

Inhalation of hydrochloric acid causes coughing and choking, as well as inflammation and ulceration of the upper respiratory tract. Irritation of the eye membranes is another effect, and exposure to high concentrations can cause clouding of the cornea. The teeth can also be affected, and erosion may result. Hydrogen chloride and hydrochloric acid are also phytotoxicants that damage the leaves of a great variety of plants. Several episodes of plant damage from hydrochloric acid emissions have been reported. Mists of hydrochloric acid are not as dangerous to humans as hydrogen chloride gas, because the acid has no strong dehydration effect on the tissues.[2]

The limited studies available on hydrogen chloride health effects pertain to occupational exposure, and indicate that no organic damage results from exposures equal to or above 7,000 $\mu g/m^3$ (5 ppm). The American Conference of Governmental Industrial Hygienists (ACGIH) has adopted a ceiling level of 5 ppm as the threshold concentration for hydrogen chloride for an 8-hour day, 5-day week.[2]

The National Academy of Sciences (NAS) has recommended some guideline ambient concentrations for hydrogen chloride for short term public exposures, or those exposures "occurring at predictable times and

arising from single or, occasionally, repeated events." The recommended short-term public limits are 6,000 $\mu g/m^3$ for 10 minutes, 3000 $\mu g/m^3$ for 30 minutes, 3000 $\mu g/m^3$ for one hour daily, and 1000 $\mu g/m^3$ for five hours/day, three to four days/month. These levels are time-weighted averages; excursions above these levels are likely to produce objectionable odors and/or irritation.[23]

West Germany has established 5 ppm as the permissible work-station concentration and also an ambient air quality standard of 0.5 ppm (approximately 700 $\mu g/m^3$) of hydrogen chloride for a 30-minute mean average, with a maximum of 1.0 ppm (1,400 $\mu g/m^3$)[2].

Russia has established 15 $\mu g/m^3$ (0.009 ppm) as a 24-hour maximum average for ambient air concentrations of hydrogen chloride and a maximum of 50 $\mu g/m^3$ of hydrogen chloride (0.03 ppm) for a single exposure. The standard for a 24-hour average is below the concentrations which might cause reflexive reaction of the sensory organs. Czechoslovakia has established a maximum ambient air concentration of 28 $\mu g/m^3$, with a one-time exposure maximum of 98 $\mu g/m^3$.[2]

6.2.2.1.1 Mass Emissions

Tables 6-7, 6-8, and 6-9 provide information on the emissions of hydrogen chloride that would occur if incineration (without subsequent scrubbing) is used to control vinyl chloride emissions from ethylene dichloride-vinyl chloride plants and polyvinyl chloride plants. Table 6-7 contains emission factors for individual sources within ethylene dichloride-vinyl chloride plants and the various types of polyvinyl chloride plants. These emission factors

TABLE 6-7. EMISSION FACTORS FOR HYDROGEN CHLORIDE RESULTING FROM INCINERATION OF EMISSION POINTS IN ETHYLENE DICHLORIDE-VINYL CHLORIDE (EDC-VCM) AND POLYVINYL CHLORIDE (PVC) PLANTS

Emission Points	Hydrogen Chloride Emissions - KG/100 KG Product				
	Suspension PVC	Dispersion PVC	Bulk PVC	Solution PVC	EDC-VCM
Monomer Recovery System	0.273	0.284	0.853	0.176	
Slurry Blend Tank	0.239	0.193	--	--	--
Dryer	0.398	1.370	--	0.472	--
Bulk Storage	0.057	0.097	0.131	--	--
Popo Blowers Screeners Grinders	--	--	0.019	--	--
EDC and VCM Purification Processes	--	--	--	--	0.648*1
Oxychlorination Reactor	--	--	--	--	0.421*1
Transfer Points	0.028	0.028	0.028	0.028	0.0468*1

*1 Includes HCL from chlorinated hydrocarbons in the gas stream besides vinyl chloride.

TABLE 6-8. HYDROGEN CHLORIDE MASS EMISSIONS FROM MODEL ETHYLENE DICHLORIDE-VINYL CHLORIDE PLANTS USING INCINERATION TO ATTAIN THE ALTERNATIVE CONTROL LEVELS

ALTERNATIVES	EMISSIONS KG/HR (LB/HR)			
	AVERAGE PLANT (318 MM kg/yr or 700 MM lb/yr)		LARGE PLANT (590 MM kg/yr or 1300 MM lb/yr)	
	WITHOUT SCRUBBER CONTROL	WITH SCRUBBER[1] CONTROL	WITHOUT SCRUBBER CONTROL	WITH SCRUBBER[1] CONTROL
I	275 (608)	5.5 (12.2)	511 (1129)	10.2 (22.6)
II[2]				
III	442 (976)	8.8 (19.5)	821 (1813)	16.4 (36.3)

[1]Assumes the scrubber has a control efficiency of 98 percent.

[2]Data for Alternative II are not presented because the hydrogen chloride emissions from incineration to attain the emission level of Alternative II would vary for individual plants, depending on the type of control system used for the oxychlorination process. For individual plants, control of the oxychlorination process to attain the emission level of Alternative II could range from no control to a process change to incineration. Therefore, the hydrogen chloride emissions for Alternative II could range between that of Alternative I, which represents no control of the oxychlorination process, to that of Alternative III, which represents incineration of the emissions from the oxychlorination process. Most existing plants can attain Alternative II control level without controlling the oxychlorination process; however, one plant would possibly have to use incineration.

TABLE 6-9. HYDROGEN CHLORIDE MASS EMISSIONS FROM MODEL POLYVINYL CHLORIDE PLANTS USING INCINERATION TO CONTROL A MAXIMUM NUMBER OF EMISSION POINTS

Model plants	Emissions, kg/hr (lb/hr)	
	Without scrubber control	With scrubber control[1]
Polyvinyl chloride suspension plant - avg. (68 MM kg/yr) (150 MM lb/yr)	77 (170)	1.8 (4.0)
Polyvinyl chloride suspension plant - large (159 MM kg/yr) (350 MM lb/yr)	181 (398)	4.0 (8.8)
Polyvinyl chloride combination suspension dispersion plant - avg. (54 MM kg/yr or 120 MM lb/yr) (14 MM kg/yr or 30 lb/yr)	93 (204)	1.9 (4.1)
Polyvinyl chloride combination suspension dispersion plant - large (136 MM kg/yr or 300 MM lb/yr) (23 MM kg/yr or 50 MM lb/yr)	206 (453)	4.1 (9.1)
Polyvinyl chloride bulk plant - avg. (45 MM kg/yr) (100 MM lb/yr)	53 (117)	1.0 (2.3)
Polyvinyl chloride bulk plant - large (77 MM kg/yr) (170 MM lb/yr)	90 (199)	1.8 (3.9)
Polyvinyl chloride solution plant (only one) (11 MM kg/yr) (24 MM lb/yr)	9 (19)	0.18(0.4)

[1]Assumes the scrubber has a control efficiency of 98 percent.

were used to calculate the total mass emissions found in Tables 6-8 and 6-9. Table 6-8 gives the hydrogen chloride emissions from an average-sized and a large model ethylene dichloride-vinyl chloride plant attaining each of the alternative control levels by using incineration. Table 6-9 gives the hydrogen chloride emissions from model polyvinyl chloride plants attaining the proposed standard by using incineration to control emissions from the maximum number of emission points where it could be appropriately applied. For dispersion resin manufacture, hydrogen chloride emissions when using incineration to meet the Alternative II control level are shown. Incineration would not be needed to attain Alternative I and could not be used (at least at the present time) to attain Alternative III. At ethylene dichloride-vinyl chloride plants, there are other chlorinated hydrocarbons in effluent gas streams besides vinyl chloride, such as ethylene dichloride and ethyl chloride, which would also be converted to hydrogen chloride in the incinerator. These are included in the factors in Table 6-7 and in the calculated emission rates in Tables 6-8 and 6-9.

Not included in the mass emission rates in Table 6-8 is the hydrogen chloride which is already emitted from the process equipment in ethylene dichloride-vinyl chloride plants without incineration control. This equipment includes the oxychlorination process, vinyl chloride distillation column, ethylene dichloride reaction vessel, ethylene dichloride recovery unit, storage tanks, and ethylene dichloride washing. Based on estimates submitted by one plant,[20] which uses the Stauffer process and controls the hydrogen chloride emissions

from all the process equipment listed above except the ethylene dichloride washing, there would be 17 kilograms (39 pounds) per hour in addition to the emissions shown in Table 6-8 for the 318 million kilograms per year ethylene dichloride-vinyl chloride plant and 26 kilograms (81 pounds) per hour in addition to the emissions shown for the 590 million kilograms per year ethylene dichloride-vinyl chloride plant. If an ethylene dichloride-vinyl chloride plant incinerates chlorinated hydrocarbon wastes, there would be additional hydrogen chloride emissions. One average-sized ethylene dichloride-vinyl chloride plant reported an emission rate of about 1 kilogram (2 pounds) per hour from incineration of liquid chlorinated hydrocarbon wastes with 99.9 percent efficient scrubber control.[21]

6.2.2.1.2 Ambient Concentrations

The mass emissions of hydrogen chloride in Tables 6-8 and 6-9 were used in diffusion modeling to calculate the maximum ambient concentrations of hydrogen chloride which would occur in the vicinity of the model plants using incineration to control vinyl chloride emissions. The maximum ambient concentrations in the vicinity of model ethylene dichloride-vinyl chloride plants attaining the alternative control levels are in Table 6-10. The maximum concentrations in the vicinity of model polyvinyl chloride plants attaining the proposed standard (or the Alternative II control level in the case of dispersion resin manufacture) are in Table 6-11.

In the case of the ethylene dichloride-vinyl chloride plants, the hydrogen chloride emissions from a plant attaining the

TABLE 6-10. HYDROGEN CHLORIDE AMBIENT CONCENTRATIONS FROM INCINERATION OF VINYL CHLORIDE EMISSIONS AT ETHYLENE DICHLORIDE-VINYL CHLORIDE PLANTS - ESTIMATED BY DIFFUSION MODELING[1]

ALTERNATIVE CONTROL LEVEL	PLANT SIZE	AMBIENT AIR CONCENTRATIONS - $\mu g/m^3$			
		WITHOUT SUBSEQUENT SCRUBBING		WITH SUBSEQUENT SCRUBBING	
		5-MINUTE AVERAGE	24-HOUR AVERAGE	5-MINUTE AVERAGE	24-HOUR AVERAGE
I	AVERAGE	50,000[2]	6,600[2]	1,500[2]	230[2]
	LARGE	73,000[2]	7,600[2]	2,800[2]	430[2]
II[4]					
III	AVERAGE	3,000[3]	270[3]	1,700[2]	220[2]
	LARGE	3,200[3]	280[3]	2,400[2]	250[2]

[1]The plants were evaluated for moderately unstable wind speeds. Receptors are assumed to be located at 80-m intervals from the center of the plant. All sources are point sources.

[2]The wind speed is 0.5 mps.

[3]The wind speed is 4.0 mps.

[4] Data for Alternative II are not presented because the hydrogen chloride emissions resulting from control systems used to attain the emission level of Alternative II would varv for individual plants, depending on the type of control system used for the oxychlorination process. For individual plants, control of the oxychlorination process to attain the emission level of Alternative II could range from no control to a process change to incineration. Therefore, the ambient concentrations of hydrogen chloride for Alternative II could range between that of Alternative I, which represents no control of the oxychlorination process, to that of Alternative III, which represents incineration of the emissions from the oxychlorination process. Most existing plants can attain Alternative II control level without controlling the oxychlorination process; however, one plant would possibly have to use incineration.

TABLE 6-11. HYDROGEN CHLORIDE AMBIENT CONCENTRATIONS FROM INCINERATION OF VINYL CHLORIDE EMISSIONS AT POLYVINYL CHLORIDE PLANTS - ESTIMATED BY DIFFUSION MODELING[1]

Model plant (size)	Ambient air concentrations, $\mu g/m^3$			
	Without scrubber control		With scrubber control	
	5-minute average[5]	24-hour average[3]	5-minute average	24-hour average[3]
Polyvinyl chloride suspension plant - average (68 MM kg/yr) (150 MM lb/yr)	230	9.2	25[4]	2.0
Polyvinyl chloride suspension plant - large (159 MM kg/yr) (350 MM lb/yr)	330	12	30[2]	2.4
Polyvinyl chloride suspension-dispersion plant - average (54 MM kg/yr or 120 MM lb/yr) (14 MM kg/yr or 30 MM lb/yr)	300	14	28[4]	2.2
Polyvinyl chloride suspension-dispersion plant - large (136 MM kg/yr or 300 MM lb/yr) (23 MM kg/yr or 50 MM lb/yr)	380	23	35[2]	2.9
Polyvinyl chloride bulk plant - average (45 MM kg/yr) (100 MM lb/yr)	300	21	38[6]	2.8
Polyvinyl chloride bulk plant - large (77 MM kg/yr) (170 MM lb/yr)	410	19	45[4]	3.0
Polyvinyl chloride solution plant (11 MM kg/yr) (24 MM lb/yr)	47	3.2	6.4[6]	0.46

[1]Receptors are assumed to be located at 80-m intervals from the center of the plant.
[2]Effective height of emissions is at stack height. All sources are point sources.
[3]The plants were evaluated for very unstable atmospheric conditions; the wind speed was 3 mps.
[4]The plants were evaluated for moderately unstable atmospheric conditions; the wind speed was 4 mps, except for bulk and solution plants controlled for which the wind speed was 1 mps.
[5]The plants were evaluated for very unstable atmospheric conditions; the wind speed was 1 mps.
[6]The plants were evaluated for very unstable atmospheric conditions; the wind speed was 4 mps.
[6]The plants were evaluated for very unstable atmospheric conditions; the wind speed was 0.5 mps.

Alternative I control level are only about 60 percent of the hydrogen chloride emissions from a plant attaining the Alternative III control level. The maximum ambient concentrations are higher, however, for the model plant attaining the Alternative I control level. This is due to the fact that Alternative III, unlike Alternative I, includes incineration of emissions from the oxychlorination reactor. The oxychlorination reactor has a large volume gas stream. The large gas volume in Alternative III would cause a much higher plume rise and greater diffusion of emissions before they reached ground level than would occur in the case of Alternative I.

EPA does not have a standard for public exposure to ambient concentrations of hydrogen chloride, and thus no yardstick with which to compare the projected 5-minute and 24-hour maxima in Tables 6-10 and 6-11. The values in the tables can be compared with the ACGIH adopted ceiling for occupational exposure, the NAS guidelines for short-term exposure, and the West German, Russian, and Czechoslovakian standards cited previously. It should be noted, however, that the value of such comparisons is limited by the fact that these standards and guidelines all have different averaging times and that their averaging times do not necessarily correspond with those of the values in the tables. It should also be noted that the values in the tables do not include the hydrogen chloride which is already emitted from process equipment in ethylene dichloride-vinyl chloride plants.

The values for Alternative I in Table 6-10 (without scrubber control) for ethylene dichloride-vinyl chloride plants show that the projected 5-minute average maxima far exceed all of the standards and guidelines for both occupational and ambient exposure. The maximum 24-hour averages are approximately the same as the ACGIH adopted ceiling level for occupational exposure (7000 $\mu g/m^3$, 8-hour average) and one of the NAS guidelines for short term-exposure (6000 $\mu g/m^3$, 10-minute average). The 5-minute average maxima for Alternative III are lower than those for Alternative I, and are approximately the same as the NAS guideline for a short-term exposure of one hour (3000 $\mu g/m^3$). The 24-hour average maxima for Alternative III are also lower than those for Alternative I and are below all recommended guidelines and standards except for the Russian and Czechoslovakian 24-hour average standards (15 $\mu g/m^3$ and 28 $\mu g/m^3$, respectively).

The values for polyvinyl chloride plants (without scrubber control) in Table 6-11 show that the 5-minute average maxima are below all the recommended guidelines and standards for short-term exposure except for the Russian and Czechoslovakian standards. The same applies to the 24-hour average maxima when comparing them with the recommended guidelines and standards for long-term exposure.

6.2.2.1.3 Technology Available to Abate Hydrogen Chloride Emissions

The principal technique for controlling hydrogen chloride in an exhaust gas is absorption (scrubbing). Hydrogen chloride readily absorbs in water which provides a suitable scrubbing medium. There are

many types of scrubbers (absorbers) that can be used. Among these are packed columns, spray columns, venturi scrubbers, and jet scrubbers. The operation of these scrubbers is essentially the same. That is, hydrogen chloride bearing gas is introduced in one end of the scrubber, and the gas is counter-currently contacted by the absorbing medium, usually water. Weak acid may be used instead of, or with, water. The part of the scrubber which comes into contact with the gas must be constructed of an acid-alkali proof material. In general, non-metallic materials should be used, such as stoneware, ceramics, carbon and graphite, and plastics or fiberglass reinforced plastics, if the temperature is low enough. For high temperatures, rubber-lined steel, protected with carbon brick set in furan cement, or carbon steel coated with epoxy and high-grade nickel alloy brick, are excellent forms of construction.[3,4]

Effectiveness

If pure water is the absorbing fluid, hydrogen chloride can be absorbed with almost 100 percent efficiency.[5,6] If weak acid is used, the efficiency will range from 85 to 99+ percent, depending upon the weak acid concentration and subsequent hydrogen chloride vapor pressure.[5] The hydrogen chloride emission levels which can be achieved for vinyl chloride and polyvinyl chloride plants using scrubbers to control the incinerator effluent are presented in Tables 6-8 and 6-9 for the various model plants. Tables 6-10 and 6-11 present the maximum 5-minute average ambient concentrations and the maximum 24-hour average ambient concentrations of hydrogen chloride which are estimated by diffusion modeling to result from the

emission levels for incinerator-scrubber control presented in Tables 6-8 and 6-9. The ambient concentrations for Alternative I are again higher than for Alternative III for the same reasons discussed in section 6.2.2.1.2.

The values in Tables 6-10 and 6-11 can be compared with the guidelines and standards cited before. Again, however, the limitation with regard to the different averaging times and the fact that the values do not include hydrogen chloride emissions from process equipment in ethylene dichloride-vinyl chloride plants should be noted. The values for ethylene dichloride-vinyl chloride plants in Table 6-10 (with scrubber control) show that even though the 5-minute average maxima for Alternative I are higher than those for Alternative III, they are in the same range. They are above all the guidelines and standards for short-term exposure except for the NAS guidelines for exposure for 10 minutes, 30 minutes, and 60 minutes (6,000, 3,000, and 3,000 $\mu g/m^3$, respectively). The 24-hour average maxima for Alternative I are again higher than those for Alternative III, but in the same range. They are both below the ACGIH ceiling, the NAS guidelines, and the West German standard, but above the Russian and Czechoslovakian standards. The values for polyvinyl chloride plants (with scrubber control) in Table 6-11 show that the 5-minute average maxima are generally below all guidelines and standards for short-term exposure except for the Russian standard in four out of seven cases. The 24-hour average maxima, on the other hand, are below all guidelines and standards for long-term exposure.

Costs of Control

Detailed information on the costs of incinerator-caustic scrubber control of model plants is contained in Chapter 7. The total capital cost of a scrubber for the model plants would be approximately half of the total operating cost of the incinerator-scrubber unit.

6.2.2.2 Water Impact

6.2.2.2.1 Increased Water Consumption

Table 6-12 lists the incremental increases in water consumption by model ethylene dichloride-vinyl chloride plants using incinerator-scrubbers to control vinyl chloride emissions to attain the alternative control levels. Table 6-13 lists the incremental increases in water consumption by model polyvinyl chloride plants using either improved stripping or incinerator-scrubbers to meet the proposed standard (or Alternative II in the case of dispersion resin manufacture). In the case of the improved stripping option, an increase in water consumption would be caused by the water purge system for reactors, carbon adsorption for the monomer recovery system, and improved stripping for the sources following the stripper. In the case of the incineration option, an increase in water consumption would be caused by the water purge system for reactors and the incinerator-scrubber system for the monomer recovery system and the sources following the stripper. Alternatives I and III are not shown for dispersion resin manufacture. Alternative I would cause the same increase in water consumption as the improved stripping option for Alternative II, but would include only the water consumption for the water purge and the carbon adsorption unit. Alternative III would be essentially the same as the improved stripping option for Alternative II, but may require additional water for steam for stripping. The quantities of

TABLE 6-12. INCREASED WATER CONSUMPTION BY MODEL ETHYLENE DICHLORIDE-VINYL CHLORIDE PLANTS USING AN INCINERATOR-SCRUBBER TO ATTAIN THE ALTERNATIVE CONTROL LEVELS

MODEL PLANTS	Base Water Consumption[1] MM l/yr (gal/yr)	ALTERNATIVE I		ALTERNATIVE II[2]	ALTERNATIVE III	
		WATER CONSUMPTION MM l/YR (GAL/YR)	PERCENT INCREASE IN WATER CONSUMPTION		WATER CONSUMPTION MM l/YR (GAL/YR)	PERCENT INCREASE IN WATER CONSUMPTION
AVERAGE-SIZED PLANT (318 MM KG/YR OR 700 MM LB/YR)	2653 (700)	3.6 (0.96)	0.1%		121(32)	4.5%
LARGE PLANT (590 MM KG/YR OR 1300 MM LB/YR)	4927 (1300)	6.7 (1.8)	0.1%		224(59)	4.5%

[1] Based on 8.31 l/kg product (1 gal/lb) reported to be used at two vinyl chloride plants.[13]

[2] Data for Alternative II are not presented because the water consumption resulting from control systems used to attain the emission level of Alternative II would vary for individual plants, depending on the type of control system used for the oxychlorination process. For individual plants, control of the oxychlorination process to attain the emission level of Alternative II could range from no control to a process change to incineration. Therefore, the water consumption for Alternative II could range between that of Alternative I, which represents no control of the oxychlorination process, to that of Alternative III, which represents incineration of the emissions from the oxychlorination process. Most existing plants can attain Alternative II control level without controlling the oxychlorination process; however, one plant would possibly have to use incineration.

TABLE 6-13. INCREASED WATER CONSUMPTION BY MODEL POLYVINYL CHLORIDE PLANTS USING VARIOUS CONTROL SYSTEMS TO ATTAIN THE PROPOSED STANDARD/ALTERNATIVE II (DISPERSION PLANTS)

MODEL PLANTS	BASE WATER CONSUMPTION MM l/yr (MM gal/yr)	CASE A (IMPROVED STRIPPING OPTION)		CASE B (INCINERATOR-SCRUBBER OPTION)	
		WATER CONSUMPTION MM l/yr (MM gal/yr)	PERCENT INCREASE IN WATER CONSUMPTION	WATER CONSUMPTION MM l/yr (MM gal/yr)	PERCENT INCREASE IN WATER CONSUMPTION
SUSPENSION PLANT - AVG. (68 MM kg/yr or 150 MM lb/yr)	1046 (276)[1]	140 (37) [reactor water purge] 27 (7) [slurry stripping] 6.8 (2.8) [water stripping] 2.3 (0.6)[3] [carbon adsorption] 176.1 (47.4) [TOTAL]	17%	140 (37) [reactor water purge] 440 (116) [incinerator-scrubber] 87 (23) [water stripping] 667 (176) TOTAL	64%
SUSPENSION PLANT - LARGE (159 MM kg/yr or 350 MM lb/yr)	2440 (644)[1]	326 (86) [reactor water purge] 63 (16) [slurry stripping] 16 (4.2) [water stripping] 5.3 (1.4)[3] [carbon adsorption] 410.3 (107.6) [TOTAL]	17%	326 (86) [reactor water purge] 1024 (270) [incinerator-scrubber] 203 (54) [water stripping] 1553 (410) TOTAL	64%
DISPERSION PLANT - AVG. (14 MM kg/yr or 30 MM lb/yr)	209 (55)[1]	28 (7.5) [reactor water purge] 49 (13) [slurry stripping] 1.4 (0.36) [water stripping] 0.5 (0.1)[3] [carbon adsorption] 78.9 (20.9) [TOTAL]	38%	28 (7.5) [reactor water purge] 440 (116) [incinerator-scrubber] 18 (4.7) [water stripping] 486 (128.2) TOTAL	232%
DISPERSION PLANT - LARGE (45 MM kg/yr or 100 MM lb/yr)	697 (184)[1]	93 (25) [reactor water purge] 163 (43) [slurry stripping] 4.6 (1.2) [water stripping] 1.5 (0.4)[3] [carbon adsorption] 262.1 (69.6) [TOTAL]	38%	93 (25) [reactor water purge] 1465 (386) [incinerator-scrubber] 60 (16) [water stripping] 1618 (427) TOTAL	232%
BULK PLANT - AVG. (45 MM kg/yr or 100 MM lb/yr)	114 (30)[2]	Negligible [slurry stripping] 5.6 (1.4) [water stripping] 1.5 (0.4)[3] [carbon adsorption] 7.1 (1.8) [TOTAL]	6%	121 (32) [incinerator-scrubber] 5.6 (1.5) [water stripping] 126.6 (33.5) TOTAL	111%
BULK PLANT - LARGE (77 MM kg/yr or 170 MM lb/yr)	193 (50)[2]	Negligible [slurry stripping] 9.5 (2.5) [water stripping] 2.6 (0.7)[3] [carbon adsorption] 12.1 (3.2) [TOTAL]	6%	205 (54) [incinerator-scrubber] 9.5 (2.5) [water stripping] 214.5 (56.5) TOTAL	111%

[1] Based on 15.35 l./kg product (1.84 gal/lb), the average of water consumption rates reported to be used at seven polyvinyl chloride plants. The range in rates of water consumption by these seven plants was from 4.0 to 45 l./kg (0.48 to 5.5 gal/lb).[10-12,14-17]

[2] Based on data from one plant.[24]

[3] For the purpose of a rough approximation, data from one plant[25] were used and a linear relationship between water consumed and production rate was assumed.

water consumed by base model ethylene dichloride-vinyl chloride and polyvinyl chloride plants are also included in Tables 6-12 and 6-13 to give some perspective. The figures for the base plants represent the average values reported by two ethylene dichloride-vinyl chloride plants,[13] seven polyvinyl chloride suspension and dispersion plants[10,11,12,14,15,16,17] and one polyvinyl chloride bulk plant.[24] There was a wide range of values reported by the polyvinyl chloride suspension and dispersion plants, from 4.0 to 45 l/kg product (0.48 to 5.5 gal/lb).

6.2.2.2.2 Wastewater from the Control Process

The two water pollutants generated or increased as the result of the application of controls identified in Chapter 4 are vinyl chloride and hydrogen chloride.

Vinyl Chloride--Amount Generated

Small increases in the quantities of vinyl chloride released into plant inprocess wastewater would result from using the water purge system for polyvinyl chloride reactors, scrubbers for control of hydrogen chloride emissions from incineration, carbon adsorption (the desorption process), and improved slurry stripping. Table 6-14 presents the quantities of vinyl chloride which would be released into the inprocess wastewater at model ethylene dichloride-vinyl chloride plants using incinerator-scrubbers and at model polyvinyl chloride suspension plants using the water purge system, incinerator-scrubbers and/or carbon adsorption to control vinyl chloride emissions. For purposes of comparison, Table 6-14 also shows the quantity of vinyl chloride reported to be released into the wastewater from base model plants in the past with no EPA regulations in effect. The figures for the

TABLE 6-14. QUANTITIES OF VINYL CHLORIDE RELEASED INTO THE PLANT INPROCESS WASTEWATER BY SYSTEMS WHICH CAN BE USED TO MEET THE PROPOSED STANDARD/ALTERNATIVE II CONTROL LEVEL (DISPERSION PLANTS)

Model Plants	Vinyl Chloride Released Into Water from a Base Plant	Vinyl Chloride Released into Water from Water Purge System[4]	Vinyl Chloride Released into Water from Incinerator-Scrubber System	Vinyl Chloride Released into Water from Carbon Adsorption[5,6]
Vinyl Chloride Plant -Avg. (318 MM kg/yr) (700 MM lb/yr)	2,227 kg/yr[1] (4,900 lb/yr)	NA[3]	0.64 kg/yr (1.4 lb/yr)	NA[3]
Vinyl Chloride Plant-Large (590 MM kg/yr) (1300 MM lb/yr)	4,131 kg/yr[1] (9,100 lb/yr)	NA[3]	1.2 kg/yr (2.6 lb/yr)	NA[3]
Polyvinyl Chloride Suspension Plant -Avg. (68 MM kg/yr) (150 MM lb/yr)	6,810 kg/yr[2] (15,000 lb/yr)	42,000 kg/yr (92,000 lb/yr)	2.0 kg/yr (4.5 lb/yr)	13,000
Polyvinyl Chloride Suspension Plant -Large (159 MM kg/yr) (350 MM lb/yr)	15,890 kg/yr[2] (35,000 lb/yr)	98,000 kg/yr (215,000 lb/yr)	4.8 kg/yr (10.5 lb/yr)	31,000

[1] Based on loss of vinyl chloride into the plant process water at one vinyl chloride plant - 0.0007 kg vinyl chloride/100 kg product (0.0007 lb/100 lb).[13] This plant uses a waste water stripper.

[2] Based on average loss of vinyl chloride into the plant process water at three polyvinyl chloride plants - 0.01 kf vinyl chloride/100 kg product (0.01 lb/100 lb). The range of the three plants was from 0.00022 to 0.027 kg vinyl chloride/100 kg product.[14-16]

[3] Not applicable.

[4] Based on data from one plant which indicate that the concentration of vinyl chloride in the water from the water purge system is 300 ppm.[26]

[5] The values for carbon adsorption are based on the assumption that the steam from desorption is condensed in the monomer recovery system, and that the condensed steam would be saturated with vinyl chloride at 70°F and 50 psig, absolute. The values for carbon adsorption, and in fact for the water purge and incinerator scrubber are not directly comparable to the values for the base plant. The values for the base plant were likely to be measured after the inprocess wastewater was exposed to the atmosphere, and thus under atmospheric conditions of temperature and pressure.

[6] The figures presented assume that carbon adsorption is used for the monomer recovery system only.

base ethylene dichloride-vinyl chloride plants represent one plant response[13] and the figures for the base polyvinyl chloride plants represent the average of three plant responses.[14,15,16]

Technology Available to Prevent Pollution

Studies indicate that any vinyl chloride released into the water, even though it may be measurable in the plant wastewater, is not measurable downstream.[22] Studies were recently conducted by the EPA Environmental Research Laboratory in Athens, Georgia, to determine the pathways by which vinyl chloride is lost from aquatic systems. Bacterial degradation of vinyl chloride was found to be negligible, and vinyl chloride did not affect bacterial growth under test conditions. No sorption to bacteria, algae or fungi could be detected. Data are not yet available on sorption to inorganic particulate. Equilibrium approximations suggest that under poor transfer conditions sorption to inorganic particulate may be significant.

Based on solubility data,[1] it is estimated that essentially all the vinyl chloride in the inprocess wastewater would be released to the atmosphere. In the presence of a large amount of pure air, the partial pressure of vinyl chloride would be extremely small causing the solubility of vinyl chloride in the water to be essentially zero. It appears from reported data (see Chapter 4, section 4.10) that the retention time of a wastewater treatment system is sufficient to allow all the vinyl chloride to be released prior to discharge. This may be due to evaporation. Vinyl chloride, with a density of 0.9834 at 20°C, is expected to rise to the surface of the water. Vinyl chloride emissions into the water and subsequently into the

air can be prevented by a water stripper. The technology of water stripping is described in detail in Chapter 4, section 4.10 and involves application of heat or vacuum to remove vinyl chloride from the wastewater. The vinyl chloride which is removed can subsequently be transferred to a monomer recovery system or to a control device.

Cost of Control Technology

Information on the cost of water strippers can be found in Chapter 7.

Hydrogen Chloride--Amount Generated

Table 6-15 quantifies the water reject rate from a scrubber and the amount of hydrogen chloride which would be released into the wastewater for the model ethylene dichloride-vinyl chloride plants using incinerator-scrubbers to meet the various alternative control levels. The same information is provided in Table 6-16 for model polyvinyl chloride plants using incinerator-scrubbers (Case B - the incineration option) to attain the Alternative II control level in the case of dispersion resin manufacture and the proposed standard in the case of manufacture of other resins. Incinerator-scrubbers would not be used to attain the Alternative I control level and could not (at least at the present time) be used to attain the Alternative III control level in the manufacture of dispersion resins.

For ethylene dichloride-vinyl chloride plants, the hydrogen chloride which would be released into the wastewater due to incineration of the chlorinated hydrocarbons other than vinyl chloride in the effluent streams is included in the calculations in Table 6-15.

TABLE 6-15. INFORMATION ON WATER EFFLUENT FROM INCINERATOR-SCRUBBER SYSTEMS AT MODEL ETHYLENE DICHLORIDE-VINYL CHLORIDE PLANTS ATTAINING THE ALTERNATIVE CONTROL LEVELS

Alternative	Model Plant Size	Water Reject Effluent Rate lpm (gal/min)	HCl Collected[1] kg/hr(lb/hr)	Water Effluent		Caustic Needed To Neutralize kg/hr (lb/hr)
				pH	HCl % Out	
I	Average-Sized Plant (318 MM kg/yr or 700 MM lb/yr)	8 (2)	269 (596)	-1	60%	296 (656)
	Large Plant (590 MM kg/yr or 1300 MM lb/yr)	14 (3.7)	501 (1106)	-1	60%	551 (1217)
II[2]						
III	Average-Sized Plant (318 MM kg/yr or 700 MM lb/yr)	258 (67)	433 (956)	0.1	3%	476 (1052)
	Large Plant (590 MM kg/yr or 1300 MM lb/yr)	479 (124)	805 (1777)	0.1	3%	885 (1955)

[1]Assumes 98 percent efficiency

[2]Data for Alternative II are not presented because the hydrogen chloride emissions from incineration to attain the emission level of Alternative II would vary for individual plants, depending on the type of control system used for the oxychlorination process. For individual plants, control of the oxychlorination process to attain the emission level of Alternative II could range from no control to a process change to incineration. Therefore, the hydrogen chloride emissions for Alternative II could range between that of Alternative I, which represents no control of the oxychlorination process, to that of Alternative III, which represents incineration of the emissions from the oxychlorination process. Most existing plants can attain Alternative II control level without controlling the oxychlorination process; however, one plant would possibly have to use incineration.

TABLE 6-16. INFORMATION ON WATER EFFLUENT FROM INCINERATOR-SCRUBBER SYSTEMS AT MODEL POLYVINYL CHLORIDE PLANTS CONTROLLING A MAXIMUM NUMBER OF EMISSION POINTS WITH INCINERATION

MODEL PLANTS (SIZE)	WATER REJECT EFFLUENT RATE LPM (GAL/MIN)	HCL COLLECTED KG/HR (LB/HR) [1]	WATER EFFLUENT		CAUSTIC NEEDED TO NEUTRALIZE KG/HR (LB/HR)
			pH	HCL % OUT	
SUSPENSION PLANT-AVG. (68 MM KG/YR OR 150 MM LB/YR)	934 (242)	75 (167)	1.5	0.13%	82 (184)
SUSPENSION PLANT-LARGE (159 MM KG/YR OR 350 MM LB/YR)	2173 (563)	177 (390)	1.5	0.13%	195 (429)
COMBINATION SUSPENSION DISPERSION PLANT-AVG. (54 MM KG/YR OR 120 MM LB/YR/14 MM KG/YR or 30 MM LB/YR)	1683 (436)	91 (200)	1.6	0.09%	100 (220)
COMBINATION SUSPENSION DISPERSION PLANT-LARGE (136 MM KG/YR OR 300 MM LB/YR/23 MM KG/YR OR 50 MM LB/YR)	3423 (887)	202 (444)	1.6	0.1%	222 (488)
BULK PLANT-AVG. (45 MM KG/YR OR 100 MM LB/YR)	258 (67)	52 (115)	1.0	0.3%	57 (126)
BULK PLANT-LARGE (77 MM KG/YR or 170 MM LB/YR)	436 (113)	88 (195)	1.0	0.3%	97 (214)
SOLUTION PLANT (11 MM KG/YR OR 24 MM LB/YR	76 (20)	8.8 (19)	1.3	0.9%	9.7 (21)

[1] Assumes 98 percent collection efficiency

However, not included in the table is the hydrogen chloride which may already be released into the wastewater at ethylene dichloride-vinyl chloride plants using scrubbers to control hydrogen chloride emissions from process equipment and/or hydrogen chloride emissions from incinerators used to dispose of liquid chlorinated hydrocarbon wastes.

The pH of the water effluent from the scrubber resulting from the hydrogen chloride emissions into the water is also included in Tables 6-15 and 6-16 for the various model plants. As can be seen from the table, the hydrogen chloride absorbed would cause the water leaving the scrubber to have a low pH (about 1.0). This acidic effluent could cause the total plant effluent to have a low pH since the scrubber effluent would be a sizeable portion of the total effluent stream.

Technology Available to Prevent Pollution

The water effluent guidelines for ethylene dichloride, vinyl chloride, and polyvinyl chloride plants specify that all new and existing plants must maintain the pH of water effluent between 6.0 and 9.0[7,8] (39 FR 12506 and 39 FR 14678).

In order to meet these guidelines, the hydrogen chloride from the scrubber stream could be recovered or neutralized prior to discharge to the plant effluent system. Generally, the concentration of the recovered acid would be too low to be sold or recycled. However, further processing would allow the production of strong acid or anhydrous hydrogen chloride. Extractive distillation would probably be necessary to accomplish this additional concentration. Ethylene dichloride-vinyl chloride plants appear to be the only ones with wastewater streams where hydrogen chloride recovery is feasible. If it were recovered at a balanced ethylene dichloride-vinyl chloride plant, it could be used as a raw material in

the process. The hydrogen chloride concentrations of the effluents from scrubbers in the different types of polyvinyl chloride plants are too low (1 percent or less) to make hydrogen chloride recovery feasible. In these cases, the scrubber effluent can be neutralized by adding caustic (NaOH) to the water in the scrubber or after it leaves the scrubber. The amount of caustic needed depends on the hydrogen chloride concentration of the effluent. Tables 6-15 and 6-16 list the amount of caustic needed for neutralization for each model ethylene dichloride-vinyl chloride and polyvinyl chloride plant. Approximately 1.1 kilograms of caustic are needed to neutralize one kilogram of hydrogen chloride.

Costs of Technology to Abate Acidic Effluent

The costs of caustic used to neutralize the hydrogen chloride collected in the scrubber water are included in the annual direct operating costs in Chapter 7 for the model ethylene dichloride-vinyl chloride plants and polyvinyl chloride plants attaining the various control levels. The data used to develop the cost figures in Chapter 7 indicate that the current cost of caustic is about $0.77/kg ($0.35/lb). The fraction of the annual direct operating cost attributable to caustic would vary from plant to plant depending on such factors as the production rate, volumetric flowrate, and the type of control applied to the oxychlorination reactor. However, as an example, caustic for model ethylene dichloride-vinyl chloride plants attaining the Alternative I control level would be about $279,000/yr (or 44 percent of the annual direct operating cost). The cost of caustic for model ethylene dichloride-

vinyl chloride plants attaining the Alternative III control level would be about $310,000/yr (or about 30 percent of the annual direct operating cost). The cost of caustic is a smaller fraction of the total annual direct operating cost for Alternative III than for Alternative I, because fuel would be a large part of the operating cost for Alternative III.

6.2.2.3 Solid Waste

A typical polyvinyl chloride plant (68 million kg product/yr) would require 3,450 kg (7,600 lb) of carbon in a carbon adsorption unit to control the monomer recovery system. As explained in section 6.1, since carbon adsorption has had only limited use in the ethylene dichloride-vinyl chloride or polyvinyl chloride industries, the bed-life of the carbon is not known at this time. However, it is judged that the carbon may have to be replaced every 1 to 3 years, or that the typical plant using carbon adsorption on its monomer recovery system may have to discard as much as 3,450 kg of carbon/yr. In comparison, based on information obtained from a similar but larger plant,[18] the total solid waste generated by an average-sized plant is estimated to be 1.8 million kg/yr (2.6 million lb/yr).

Besides bulk there may be additional problems associated with disposal of the carbon due to residual vinyl chloride or other contaminants collected on the bed. Problems of this nature have not been qualified or quantified at this time. It is conceivable that the waste carbon could be burned in a boiler to recover some of the heat value of the material; however, potential air pollution problems such as emissions of hydrogen chloride from combustion of chlorinated hydrocarbons would exist.

6.2.2.4 Noise and Radiation

As indicated in Table 6-1, there are no known noise or radiation impacts associated with the controls.

6.2.2.5 Energy Considerations

In Tables 6-17 and 6-18, incremental energy requirements are estimated for the model ethylene dichloride-vinyl chloride plants and polyvinyl chloride dispersion plants attaining the alternative control levels identified in Chapter 5. In Tables 6-19 and 6-20, incremental energy requirements are estimated for the model polyvinyl chloride suspension and bulk plants attaining the control level of the proposed standard. The energy estimates in these tables are based on the energy requirements used to calculate the operating costs for various pieces of equipment in Chapter 7. For ethylene dichloride-vinyl chloride plants, the energy costs are shown for control by incineration only. For polyvinyl chloride plants, the energy costs are shown for both options available to the plants for meeting the proposed standard (or Alternative II in the case of dispersion resin manufacture). These options are improved stripping (Case A) and add-on control technology (Case B). Incineration is the only type of add-on control technology for which energy costs are presented because incineration is the control technique for which most data are available, it is the most likely type of add-on control technology to be used for many emission sources, and it is expected to be the most energy consuming type of add-on control technology. Table 6-21 compares the energy consumption rates at various model plants with and without controls.

As indicated in the tables, the fuel consumption at ethylene dichloride-vinyl chloride plants using incineration to meet the

TABLE 6-17. INCREASED ENERGY CONSUMPTION - ETHYLENE DICHLORIDE-VINYL CHLORIDE PLANT (318 MM kg VCM/yr)(700 MM lb VCM/yr) ATTAINING THE ALTERNATIVE CONTROL LEVELS

EMISSION POINT	ALTERNATIVE I		ALTERNATIVE II[1]	ALTERNATIVE III	
	POWER CONSUMPTION (1000 KWH/YR)	FUEL CONSUMPTION MM KCAL/YR (MM BTU/YR)		POWER CONSUMPTION (1,000 KWH/YR)	FUEL CONSUMPTION MM KCAL/YR (MM BTU/YR)
1. Fugitive Emissions	132[2]	none		132[2]	none
2. Point Source Emissions A. EDC Purification B. VCM Formation and Purification C. Oxychlorination Process	1,140	Negligible		1,140	74,600 (296,000)
TOTAL	1,272	Negligible[3]		1,272	74,600 (296,000)

[1]Data for Alternative II are not presented because the increased energy consumption for attaining the emission level of Alternative II would vary for individual plants, depending on the type of control used for the oxychlorination process. For individual plants, control of the oxychlorination process to attain the emission level of Alternative II could range from no control to a process change to incineration. Therefore, the increased energy consumption for Alternative II could range between that of Alternative I, which represents no control of the oxychlorination process, to that of Alternative III, which represents incineration of the emissions from the oxychlorination process. Most existing plants can attain Alternative II control level without controlling the oxychlorination process; however, one plant would possibly have to use incineration.

[2]This power is needed for the multipoint vinyl chloride detector. All other methods used to contain or capture fugitive emissions consume negligible quantities of energy. It is assumed that any captured fugitive emissions which are required to be controlled, will be controlled by the incinerator used to control point source emissions. Thus, energy consumed for control of captured fugitive emissions is included in the energy consumption figures for the point source emissions.

[3]Effluent stream sustains combustion without auxiliary fuel.

TABLE 6-18. INCREASED ENERGY CONSUMPTION -

Emission point	ALTERNATIVE I			ALTERNATIVE II		
				CASE A		
	Method of control	Power consumption (1000 kWhr/yr)	Fuel consumption MM kcal/yr (MM Btu/yr)	Method of control	Power consumption (1000 kWhr/yr)	Fuel consumption MM kcal/yr (MM Btu/yr)
1. Fugitive emissions[1]						
A. Leaks from equipment	Multi-point detector	330	None	Multi-point detector	330	None
B. Inprocess wastewater	Water stripper	5	3000 (11,000)	Water	5	3000 (11,000)
2. Point source emissions						
A. Reactor opening	Water purge/ gasholder system	62	None	Water purge/ gasholder system	62	None
B. Relief valve discharge						
C. Stripper	Carbon adsorption	3	400 (1400)	Carbon adsorption	3	400 (1400)
D. Monomer recovery system						
E. Sources following the stripper (slurry blend tanks, dryers, bulk storage, etc.)	No additional control	-	-	Improved stripping (2000 ppm)	610	32,000 (126,000)
TOTAL		400	3400 (12,400)		1010	35,400 (138,400)

[1] It is assumed that any captured fugitive emissions which are required to be controlled will be controlled by the incinerator or carbon adsorber used to control point source emissions.

DISPERSION POLYVINYL CHLORIDE PLANT (14 MM kg/yr or 30 MM lb/yr)

ALTERNATIVE II (cont'd.)			ALTERNATIVE III		
CASE B					
Method of control	Power consumption (1000 kWhr/yr)	Fuel consumption MM kcal/yr (MM Bty/yr)	Method of control	Power consumption (1000 kWhr/yr)	Fuel consumption MM kcal/yr (MM Btu/yr)
Multi-point detector	330	None	Multi-point detector	330	None
Water stripper	34	34,000 (136,000)	Water stripper	5	3,000 (11,000)
Water purge/ gasholder system	62	None	Water purge/ gasholder system	62	None
Incineration	4524	334,000 (1,325,000)	Carbon adsorption	3	400 (1400)
Incineration			Improved stripping (400 ppm)	(Data unavailable. This level of stripping has not been demonstrated commercially in any plant.)	
	4950	368,000 (1,461,000)		(Data unavailable. This level of stripping has not been demonstrated commercially in any plant.)	

Table 6-19. INCREASED ENERGY CONSUMPTION--SUSPENSION POLYVINYL CHLORIDE PLANT [68 MM kg/yr (150 MM lb/yr)] MEETING PROPOSED STANDARD

Emission point	Case A			Case B		
	Method of control	Power consumption, 1000 kWh/yr	Fuel consumption, MM KCal/yr (MM Btu/rr)	Method of control	Power consumption, 1000 kWh/yr	Fuel consumption, MM KCal/yr (MM Btu/yr)
1. Fugitive emissions[1]						
A. Leaks from equipment	Multipoint detector	330	None	Multipoint detector	330	None
B. Inprocess wastewater	Water stripper	11	13,000 (53,000)	Water stripper	132	171,000 (681,000)
2. Point source emissions						
A. Reactor opening	Water purge/ gasholder system	219	None	Water purge/ gasholder system	219	None
B. Relief valve discharge						
C. Stripper	Carbon adsorption	3	400 (1,400)	Incineration	4,560	321,000 (1,270,000)
D. Monomer recovery system						
E. Sources following stripper (slurry blend tanks, dryers, bulk storage, etc.)	Improved stripping	1,260	18,000 (70,000)	Incineration		
Total		1,823	31,400 (124,400)		5,241	492,000 (1,951,000)

[1] It is assumed that any captured fugitive emissions that are required to be controlled will be controlled by the incinerator or carbon adsorber used to control point source emissions.

Table 6-20. INCREASED ENERGY COMSUMPTION--BULK POLYVINYL CHLORIDE PLANT [45 MM kg/yr (100 MM lb/yr)] MEETING PROPOSED STANDARD

Emission point	Case A			Case B		
	Method of control	Power consumption, 1000 kWh/yr	Fuel consumption, MM KCal/yr (MM Btu/yr)	Method of control	Power consumption, 1000 kWh/yr	Fuel consumption, MM KCal/yr (MM Btu/yr)
1. Fugitive emissions[1]						
A. Leaks from equipment	Multipoint detector	330	None	Multipoint detector	330	None
B. Inprocess Wastewater	Water stripper	3	1,000 (4,000)	Water stripper	3	1,000 (4,000)
2. Point source emissions						
A. Reactor opening B. Relief valve discharge	Gasholder system	23	None	Gasholder system	23	None
C. Monomer recovery system	Carbon adsorption	3	400 (1,400)	Incineration	1,140	53,000
D. Sources following stripper (baggers bulk, loading bulk storage, etc.)	Improved stripping	1,000	14,000 (57,000)	Incineration		(210,000)
Total		1,359	15,400 (62,400)		1,496	54,000 (214,000)

[1] It is assumed that any captured fugitive emissions that are required to be controlled will be controlled by the incinerator or carbon absorber used to control point source emissions.

TABLE 6-21. COMPARISON OF ENERGY CONSUMPTION BY MODEL PLANTS WITH AND WITHOUT CONTROLS

Model plant (average size)	Total base energy usage (fuel),[1] MM KCal/yr	Type of control	Total energy usage of control equipment (fuel),[1] MM KCal/yr	Increase in energy consumption as result of applying controls, percent
Ethylene dichloride - vinyl chloride plant (318 MM kg/yr) (700 MM lb/yr)	1,014,300[2]	Using incineration to attain alternative I control level	1,450	0.1
Ethylene dichloride - vinyl chloride plant (318 MM kg/yr) (700 MM lb/yr)	1,014,300[2]	Using incineration to attain alternative II control level	Generally the same as alternative I. Possibly the same as alternative II for one plant	
Ethylene dichloride - vinyl chloride plant (318,MM kg/yr) (700 MM lb/yr)	1,014,300[2]	Using incineration to attain alternative III control level	76,050	7
Polyvinyl chloride suspension plant (68 MM kg/yr) (150 MM lb/yr)	223,350[3]	Using improved stripping to attain the proposed standard	33,490	15
Polyvinyl chloride suspension plant (68 MM kg/yr) (150 MM lb/yr)	223,350[3]	Using incineration to attain the proposed standard	498,000	223
Polyvinyl chloride dispersion plant (14 MM kg/yr) (30 MM lb/yr)	44,670[3]	Using improved stripping to attain alternative II control level	36,160	81
Polyvinyl chloride dispersion plant (14 MM kg/yr) (30 MM lb/yr)	44,670[3]	Using incineration to attain alternative II control level	373,680	836
Polyvinyl chloride bulk plant (45 MM kg/yr) (100 MM lb/yr	33,406[4]	Using improved stripping to attain the proposed standard	16,960	50
Polyvinyl chloride bulk plant (45 MM kg/yr) (100 MM lb/yr)	33,406[4]	Using incineration to attain the proposed standard	55,700	166

[1]The power usage has been converted to fuel, assuming 75 percent boiler efficiency.

[2]Based on data submitted by two plants.[13]

[3]Based on data submitted by four plants.[10-12,17]

[4]Based on 1973 data submitted by one plant

Alternative I control level would be negligible. To meet the Alternative III control level would, however, result in an increased fuel consumption of 74,600 million kilocalories/yr (296,000 million BTU/yr). This, combined with increased power usage (1,272,000 kwh/yr) would increase energy consumption at a model plant by about 7 percent. The higher fuel consumption for Alternative III is due to the relatively large quantity of supplemental fuel which would be required to support combustion of the relatively large volume, low concentration gas stream from the oxychlorination reactor at ethylene dichloride-vinyl chloride plants. These plants could possibly reduce this energy impact to some extent because they are typically located in large petrochemical complexes. The heat value of both the supplemental fuel and the hydrocarbons in the waste gas stream could possibly be used as steam in other parts of the petrochemical complex.

As indicated in Table 6-18, the energy consumption at polyvinyl chloride dispersion plants attaining the Alternative II control level with improved stripping would be increased over the energy consumption of plants attaining the Alternative I control level by a factor of 10. This is due to the fact that Alternative II requires control of the sources following the stripper in the flow of process materials through the plant and Alternative I does not. The sources following the stripper constitute a substantial portion of the total plant emissions. For polyvinyl chloride dispersion plants, as for other types of polyvinyl chloride plants, controlling the sources following the stipper with incineration (Case B) rather than improved stripping (Case A) would cause a much greater increase in energy consumption. Since improved

stripping and incineration achieve the same degree of control, the plants rather than EPA would be in the position of deciding which of these control techniques would be used. Due to the high costs of energy consumption which would result from controlling with incineration, plants would be expected to use improved stripping as the control technique instead of incineration. Since the degree of improved stripping required by Alternative III has not been used at any dispersion plants, data are not available on the quantity of energy that would be required to meet this control level.

References

1. U.S. Environmental Protection Agency, Office of Research and Development, Scientific and Technical Assessment Report on Vinyl Chloride and Polyvinyl Chloride, Washington, D.C., June 1975.

2. NAPCA, U. S. Department of Health, Education, and Welfare, Preliminary Air Pollution Survey of Hydrochloric Acid, A Literature Review, Raleigh, North Carolina, October 1969, pp. 3, 4, 12, 13.

3. Scrubber Handbook, Ambient Purification Technology, Inc., July 1972.

4. Sahals, S. L. and Schwartz, R. A., Construction Materials for Wet Scrubbers, Koch Engineering Company, Chemical Engineering Progress, August 1974.

5. Hulswitt, E. E., Adiabatic and Falling Film Absorption of Hydrogen Chloride, Astro Metallurgical Corporation, Chemical Engineering Progress, February 1973.

6. Kemper, S. K., Seiler, E. N., Bowman, D. H., Air Pollution Control Association Journal, March 1970, pp. 139-143.

7. Environmental Protection Agency, "Plastics and Synthetics Point Source Category Effluent Guidelines and Standards," Federal Register, Volume 39, No. 67, April 5, 1974, Part II, pp. 12506, 7.

8. Environmental Protection Agency, "Organic Chemicals Manufacturing Point Source Category. Effluent Guidelines and Standards and Proposed Application to Pretreatment Standards," Federal Register, Volume 39, No. 81, April 25, 1974, Part II, pp. 14678, 9.

9. Schwartz, W. A. et al., Engineering and Cost Study of Air Pollution Control for the Petrochemical Industry Volume 3 Ethylene Dichloride Manufacture by Oxychlorination, Prepared for the Environmental Protection Agency, Houdry Division--Air Products and Chemicals, Inc., Pennsylvania, November 1974, p. ED-39.

10. Joe Mudd (General Tire Company). Telephone conversation with Susan Wyatt (EPA), January 30, 1975.

11. Doug McWhorter (B. F. Goodrich, Louisville, Kentucky). Telephone conversation with Susan Wyatt (EPA) on January 28, 1975.

12. Jay Harpring (Continental Oil Company, Abeerdeen, Mississippi). Telephone conversation with Continental Oil Company on January 30, 1975.

13. Letter from R. E. Ingen, Shell Oil Company, to Leslie B. Evans, EPA, January 31, 1975.

14. Dave Francke (Air Products and Chemicals, Inc., Escambia, Florida). Telephone conversation with James Eddinger (EPA) on November 25, 1974.

15. Bob Luckan (Air Products and Chemicals, Inc., Calvert City, Kentucky). Telephone conversation with James Eddinger (EPA) on November 25, 1974.

16. Letter with attachments from R. N. Wheeler, Jr., Union Carbide Corporation to Don R. Goodwin, EPA, June 26, 1974.

17. Robert Bellamy (Houdry Division of Air Products and Chemicals). Telephone conversation with John Christiano (EPA) on February 6, 1975.

18. Solid Waste Questionnaire for 1973, Jefferson County Air Pollution Control District, Louisville, Kentucky.

19. Harlan Jewett (General Tire). Telephone conversation with Charles F. Kleeberg (EPA), February 20, 1975.

20. Letter with attachments from R. E. Van Ingen, Shell Chemical Company, to Don R. Goodwin, EPA, July 5, 1974.

21. Robert Troutner (Shell Chemical Company). Telephone conversation with Susan Wyatt (EPA).

22. "EPA Urges Prompt Steps by Chemical Industry to Reduce Vinyl Chloride Air Emissions", Environmental News, EPA, Washington, D.C., June 11, 1974.

23. "Guides for Short-Term Exposures of the Public to Air Pollutants, II. Guide for Hydrogen Chloride," The Committee on Toxicology of the National Academy of Sciences - National Research Council, Washington, D.C., August, 1971.

24. Robert Fine (Occidental Petroleum Company, Burlington, New Jersey), telephone communication with Susan Wyatt (EPA) on September 8, 1975.

25. W.P. Anderson (Tenneco, Cleveland, Ohio), telephone communication with Susan Wyatt (EPA) on September 9, 1975.

26. Harlan Jewett (General Tire). Telephone conversation with Susan Wyatt (EPA), June 1975.

7. ECONOMIC IMPACT ANALYSIS

7.1 INDUSTRY ECONOMIC PROFILE

7.1.1 Ethylene Dichloride

Any analysis of the polyvinyl chloride industry must begin with a discussion of ethylene dichloride because about 80 percent of the ethylene dichloride produced in the United States goes directly to the production of vinyl chloride and, ultimately, polyvinyl chloride resins.[1] As a result, the producers of ethylene dichloride are extremely dependent upon the polyvinyl chloride resin industry. Domestic demand for ethylene dichloride in 1974 amounted to 4.7 billion kilograms.[2]

7.1.2 Vinyl Chloride

Based upon July, 1975 capacities, an estimated 92 percent of the vinyl chloride produced in the United States was produced by the pyrolysis of ethylene dichloride. The other 8 percent was made by the addition of hydrogen chloride to acetylene.[3] The 1974 estimated domestic production of vinyl chloride amounted to 2.6 billion kilograms.[4]

An estimated 97 percent of the vinyl chloride produced in the United States is used to produce polyvinyl chloride homopolymer and copolymer resins.[5] As a result, the existence of the vinyl chloride industry hinges on polyvinyl chloride production. Recent estimates indicate that approximately 940 workers

are directly engaged in the production of vinyl chloride in the United States.[6]

7.1.3 Polyvinyl Chloride

In 1974, estimated production of polyvinyl chloride resins in the United States amounted to 2.2 billion kilograms, and, at an estimated average unit sales value of 25.0 cents per pound (55 cents per kilogram), the production value was approximately 1.2 billion dollars.[7]

In 1975, polyvinyl chloride resins were produced by 23 companies, at 41 plants, by one or more of 4 processes--suspension, emulsion, bulk, and solution.

7.1.4 Vertical Integration and Industry Concentration

Vertical integration is that situation wherein a producer owns not only the producing plant but also either a raw material supplier and/or a plant that uses the producer's product.

There is a limited amount of vertical integration within the polyvinyl chloride industry from the production of ethylene dichloride through the production of polyvinyl chloride resin. Five companies produce all three products (i.e. ethylene dichloride, vinyl chloride, and polyvinyl chloride), while sixteen companies manufacture only one of the three products. Six firms produce two of the three products. Table 7-1 illustrates the amount of vertical integration for the entire industry.

Since plants that produce vinyl chloride also generally produce ethylene dichloride, plants in the sector of the industry are often times referred to as ethylene dichloride-vinyl chloride plants.

There is a great deal of concentration in the production of ethylene dichloride-vinyl chloride and polyvinyl chloride. A few firms in each industry account for much of the total capacity. With regard to vinyl chloride production, out of a total of 10 firms, 2 account for 41 percent of the industry's capacity. The five largest firms account for 78 percent of total industry capacity. In the polyvinyl chloride industry, out of a total of 22 firms, 5 account for approximately 47 percent of total industry capacity. The 9 largest firms account for an estimated 67 percent of total industry capacity. (Figures derived from Tables 3-2 and 3-3).

7.1.5 Polymerization of Polyvinyl Chloride Resins by Process

As mentioned earlier, polymerization of polyvinyl chloride is achieved by four processes. Suspension polymerization accounts for 78 percent of domestic polyvinyl chloride capacity and is practiced by nearly all producers. Emulsion polymerization accounts for 13 percent of total capactiy and is practiced by 11 companies. Six percent of all polyvinyl chloride resins are produced by 4 companies using the bulk polymerization process; and 1 company accounts for 3 percent of the total polyvinyl chloride capacity using the solution process.[8]

7.1.6 Polyvinyl Chloride Consumption by End Use

Polyvinyl chloride resins are an intermediate product which have a wide variety of end uses. Polyvinyl chloride resin consumption by general categories of end use for 1974 is summarized in Table 7-2.

Consumption of polyvinyl chloride increased 10.5 percent annually from 1969 to 1974. The most significant growth categories were building and construction (19.9 percent annually), miscellaneous-mainly credit cards (18.9 percent annually), and packaging (8.4 percent annually.)[9]

It should be noted that total domestic demand for polyvinyl chloride resins decreased by 2.4 percent in the period 1973-1974. The major areas in which decreases occurred were electrical uses (14.4 percent), building and construction (6.4 percent), and apparel (4.6 percent).[10]

Some of the more common uses within each category are:

Building and Construction - pipe, pipe fittings, and conduit; flooring; siding; windows and other rigid profiles, swimming pool liners; lighting; weatherstripping; rainwater systems.

Household furnishings - furniture upholstery; wall coverings; shower curtains; garden hose; appliances.

Consumer Goods (recreation and apparel) - phonograph records; footwear; toys; outerwear; sporting goods; baby pants.

Electrical Uses - coated wire and cable.

Packaging - hardware and pharmaceutical packaging; food packaging; bottles; coatings.

Transportation - upholstery and seat covers; vinyl tops; auto floormats.

Miscellaneous - laminates; medical tubing; credit cards; novelties.[11]

7.1.7 Polyvinyl Chloride Substitutes

Discussions with industry representatives have led to the conclusion that substitutes exist for a number of present polyvinyl chloride applications. Although these substitutes do exist, there would be a certain delay in obtaining adequate quantities of the substitute materials, and prices of the substitutes would generally be higher than polyvinyl chloride. Table 7-3 contains a list of the major polyvinyl chloride uses and possible substitute materials.

7.1.8 Industry Employment

Total direct employment in the vinyl chloride industry and the polyvinyl chloride industry is estimated to be:

Vinyl Chloride	940
Polyvinyl Chloride	5,600

Additionally, it is believed that as many as 2,000,000 jobs are indirectly related to the production of polyvinyl chloride.[12]

7.1.9 Increases in Industry Capacity

Three new polyvinyl chloride plants were started between the fourth quarter of 1974 and the second quarter of 1975. These plants (Georgia-Pacific at Plaquemine, Louisiana, Shintech at Freeport, Texas, and Tenneco at Pasadena, Texas) accounted for additional industry capacity of 310,000,000 kilograms per year. During the same period of time, however, two polyvinyl chloride plants ceased production (Olin at Assonet, Massachusetts - 70,000,000 kilograms per year and National Starch at Meredosia, Illinois - 4,500,000 kilograms per year) so that the net increase in industry capacity was approximately 235,500,000 kilograms per year. This represented a net increase in industry capacity of approximately 10 percent.

In addition to the expansions noted above, several companies have indicated that additional increases to industry capacity will be forthcoming. These expansions, detailed in Table 7-4, would result in additional capacity of approximately 520,000,000 kilograms, or 20 percent of current industry capacity. The timing of these expansions is not known with any degree of certainty and it is possible that some projects could be indefinitely delayed if the industry believes that future prospects in the polyvinyl chloride resins market are not promising.

Announced capacity expansion plans in the ethylene dichloride-vinyl chloride sector of the industry are currently limited to the construction of a new plant by Borden, Inc., at Geismar, Louisiana. This plant is expected to have a capacity of approximately 135,000,000 kilograms per year of vinyl chloride and be on-stream in 1976.[13] Other ethylene dichloride-vinyl chloride plants may be constructed if future projected polyvinyl chloride production volumes are to be attained. One projection indicates that a total of approximately 300,000,000 kilograms of vinyl chloride capacity will have to be added in order to satisfy demand in 1980.[14] This means that one more ethylene dichloride-vinyl chloride plant, in addition to the Borden plant mentioned above, may be constructed in the near future.

7.1.10 Product Price Histories

Both vinyl chloride and polyvinyl chloride resin prices had a general and significant downward trend throughout the 1950's and 1960's as a result of improving technology and capacity increases. The price of vinyl chloride has moved from a high of 13.5¢/lb in 1954 to a low of 4.75¢ in the late 1960's and early 1970's.[15] Since the early 1970's vinyl chloride prices have risen rapidly in response to increased production costs based primarily on raw material price increases. June, 1975 list prices ranged from 9-12¢/lb.

General purpose suspension process polyvinyl chloride resin listed at 38¢/lb in 1954 and decreased to a low of 10¢/lb in 1968.[16] Since 1968 the trend has been consistently upward with substantial increases in 1974. June, 1975 list prices ranged from 24-28¢/lb.

Both homopolymer and copolymer dispersion grade resins have historically been priced higher than suspension grade resins. Dispersion grade prices were stable in the period from 1960 through 1971, though as with suspension resins

prices fell from 1950-1960.[17] Recently, dispersion grade prices have risen with ethylene dichloride, vinyl chloride, and suspension grade resin prices. June, 1975 list prices ranged from 34-37¢/lb.

Recent price changes for ethylene dichloride, vinyl chloride, and polyvinyl chloride are shown in Table 7-5.

Actual selling prices are sometimes lower than the list prices as stated above, but the amount of the discount varies due to various factors (supply-demand relationships, existence of long-term contract commitments, etc.). It is not known to what extent discounting is currently being employed in the industry, if at all.

7.2. COST ANALYSIS OF ALTERNATIVE EMISSION CONTROL SYSTEMS

7.2.1 Introduction

For each of the various emission control systems identified in Chapter 4 for ethylene dichloride-vinyl chloride and polyvinyl chloride plants, installed capital and total annualized costs are estimated. This section primarily deals with the costs for controlling model ethylene dichloride-vinyl chloride and polyvinyl chloride plants to achieve various emission levels. Each of these model plants is of such process configuration and size as to be fairly representative of a typical existing plant in the industry. Although the individual plant control costs will vary to a greater or lesser degree from these model plant costs, this section also presents, in Table 7-6, formulas that can be used to scale the model plant costs up or down in order to approximate control costs at an existing installations. Naturally, control costs at existing installations are quite difficult to estimate without detailed, plant-by-plant engineering studies. Whereas Table 7-6 is believed to be representative of control costs in the aggregate, the table is not intended to provide anything other than general estimates of plant-by-plant control costs.

The model plant costs are based on data obtained from the individual companies through requests for information under the authority of Section 114 of the Clean Air Act. Cost data has also been available from the Industrial Gas Cleaning Institute (IGCI), who, under an EPA contract, has provided information based on bids from actual vendors of control equipment. Both sets of cost data have been used by EPA in developing the model plant air pollution control costs.

Two major kinds of costs have been developed herein: installed capital costs and total annualized costs. The installed capital cost for each control alternative includes the purchased cost of the major equipment and auxiliary equipment and the cost for site preparation and installation of the equipment, and design engineering cost. No attempt has been made to include costs for research and development, possible lost production during equipment installation, or losses during startup.

The total annualized cost is comprised of three categories: the direct operating cost, the annualized capital charge, and the monomer recovery credit. The first accounts for operating and maintenance costs, such as:

- Labor and materials needed to operate the control equipment;
- Maintenance labor and materials;
- Utilities, which include fuel, electric power, water, steam, and inert gas.

The annualized capital charge accounts for depreciation, interest, administrative overhead, property taxes, and insurance. The depreciation and interest portion is computed by use of a capital recovery factor, the value of which depends on the device operating life (5 to 20 years, in this report) and the interest rate. (An annual interest rate of 10 percent has been assumed.) Administrative overhead, taxes, and insurance have been fixed at an additional 2.5 percent of the installed capital cost per year.

The monomer recovery credit accounts for the value of the vinyl chloride recovered by the control equipment. Herein, a credit of $.10 per pound of vinyl chloride has been assumed.

The total annualized cost is then obtained simply by adding the direct operating cost, the annualized capital charge, and the monomer recovery credit.

7.2.2 Cost of Alternative Control Measures

Four main emission points have been identified for the balanced ethylene dichloride-vinyl chloride plant, and seven each for the suspension and dispersion polyvinyl chloride plants (see Tables 7-7 through 7-9). The bulk polyvinyl chloride model plant has four points of emission. (See Table 7-10). (Since only one solution process polyvinyl chloride plant is currently in operation, a special model plant has not been developed for the solution process. Control costs for the plant have been developed, however, and are included in the analysis in Section 7.3.) Each of the emission points may, in turn, be controlled by one or more control measures, so that a number of control configurations are possible.

The data costs identified in this section, however, are those which would be incurred by the model plant using a selected combination of control measures to attain the alternative control levels identified in Chapter 5 for ethylene dichloride-vinyl chloride plants and polyvinyl chloride dispersion plants. For polyvinyl chloride plants not making dispersion resins, there are no alternative control levels, and costs are shown for model plants using a selected combination of control measures to attain the level of the proposed standard. For polyvinyl chloride plants, two types of control can be used to attain the emission level of Alternative II in the manufacture of dispersion resins and the emission level of the proposed standard in the manufacture of the other resins. Costs are presented for both types of control.

7.2.2.1 Ethylene Dichloride-Vinyl Chloride Model Plant

Table 7-7 illustrates the balanced ethylene dichloride-vinyl chloride model plant control costs at the two alternative levels of control. Alternative I involves fugitive emission reduction and incineration of the ethylene dichloride

purification and the vinyl chloride formation and purification processes. Control of the oxychlorination process is not included in this alternative. Alternative III includes incineration of the oxychlorination process in addition to fugitive controls and incineration of the aforementioned ethylene dichloride and vinyl chloride processes. Included among the fugitive emission reduction measures are monitoring to detect points of high emissions, installation of dual mechanical pump and compressor seals and rupture disks, and various control systems for process sampling and transfer operations. (These costs are presented on an item-by-item basis in Table 7-11). Costs for stripping vinyl chloride from inprocess wastewater are not included because the existing plants generally already use water strippers.

As illustrated by Alternative I in Table 7-7, control of fugitive emissions and incineration of ethylene dichloride and vinyl chloride monomer processes will require a total capital expenditure of $889,000 at the 318 million kg/yr (700 million lb/yr) model plant. Annualized costs amount to $793,000/yr, or 0.24¢/kg (0.11¢/lb) of vinyl chloride produced at capacity. In order to control the oxychlorination process emissions it is necessary to spend an additional $1,014,000 in installed capital and $864,000/yr (0.29¢/kg=0.13¢/lb) in annualized costs. Total control costs for Alternative III then becomes $1,903,000 in installed capital and $1,657,000/yr (0.53¢/lb=0.24¢/lb) in annualized costs. Overall control of emissions is approximately 90 percent for Alternative I and 97 percent for Alternative III.

Note that Alternative II is not considered for the model plant in Table 7-7. This is so because the increased costs for attaining the emission level of Alternative II would vary for individual plants, depending on the type of control system used for the oxychlorination process. For individual plants, control of this process to attain the Alternative II level could range from no control to a process change to incineration. Correspondingly, the control

costs for Alternative II could range between that of Alternative I, which represents no control of the process, to that of Alternative III, which involves thermal incineration. In any case, no definitive cost data has yet been developed for any oxychlorination control except incineration.

7.2.2.2 Suspension Polyvinyl Chloride Model Plant

As mentioned earlier, two control configurations (each of which corresponds to the same alternative, an overall control efficiency of 95 percent) have been applied to the model suspension and bulk polyvinyl chloride plants. One control option (Case A) is the improved stripping option. This case assumes that the polyvinyl chloride resin can be stripped to a level of 400 parts per million.

To illustrate the substantial difference between the cost impacts, a second case (B) has been developed for the suspension and bulk model plants. This case is the incineration option and is intended to show the approximate cost level that would be realized if incineration were used for vinyl chloride control at certain emission points.

The suspension process model plant costs are shown in Table 7-8. The control costs for Case A include various fugitive emission reduction techniques. These methods include those to control the ethylene dichloride-vinyl chloride model plant plus water stripping to remove vinyl chloride from the process water streams in the plant. This system consists of a large vessel (plus auxilliaries) in which the monomer is flashed from the water under vacuum by contacting with open steam, followed by separation of the resultant water vapor from the monomer by condensation of the water. Following condensation, the monomer is sent to the plant monomer recovery system. In addition to these fugitive controls, Case A involves the installation of a

gasholder-purge water system to control the reactor opening and relief valve discharge emission points. The gasholder is merely a vapor conservation or surge tank, whose function is to collect vinyl chloride monomer vapors in air from these points and release them steadily to the monomer recovery system, thereby permitting the system to operate at a steady flow condition rather than intermittently. The reactor water purge system, which operates in conjunction with this gasholder, is a system designed to purge the vinyl chloride monomer vapor left in the reactors after completion of the reaction cycle to the gasholder by the introduction of water. Case A also includes the installation of improved reactor pressure and temperature recorder-controllers, along with an automatic reaction quenching (short-stopping) system, both of which would minimize monomer losses from relief valve discharges. The new recorder-controllers would afford better control of the polymerization reaction itself, while the automatic short-stopping system permits the plant to quench reactions in the event of an emergency.

Also included in Case A is an improved stripping operation. The improved stripping removes some of the monomer from the reactor products, so that this vinyl chloride monomer is not emitted further downstream, from the slurry blend tank, centrifuge dryer, storage silos, inprocess wastewater, etc., as is presently the case with uncontrolled plants. The cost of installing such a system is a function primarily of the size and construction parameters of the stripper vessel(s) (usually stainless steel tanks), which, in turn, depend on the weight of material processed or (alternatively) the polyvinyl chloride production rate. Accordingly, the costs for the model plant have been scaled directly with production (see Table 7-6).

Control of the low-volume (approximately 15 ACFM) stream from the monomer recovery system with carbon adsorption is also included in Case A. Despite the low volumetric flowrate, installed capital cost is substantial ($333,000) because even the smallest adsorption unit requires nearly the same amount of design effort, fabrication labor, and instrumentation as do the larger devices.

Total installed capital costs for the 68 million kg/yr (150 million lb/yr) model suspension process polyvinyl chloride plant are $4,462,000 for Case A. Annualized costs for the model plant are $1,222,000/yr (1.8¢/kg=0.81¢/lb of PVC at capacity).

The second control configuration, Case B, includes the same fugitive controls, improved instrumentation, automatic quench system, and gasholder-water purge system of Case A plus new slurry blend tanks and an incinerator-caustic scrubber for abating emissions from the slurry blend tank, centrifuge, monomer recovery system, dryer, and bulk storage and transfer points. The relatively high volume of these combined streams (about 81,000 ACFM) means a heavy capital investment for the incineration system, where the high control efficiency specified (99 percent) requires a substantial direct operating cost, due to the high amount of fuel necessary to attain this level.

Because the slurry blend tanks currently installed in polyvinyl chloride plants cannot withstand more than a few ounces of pressure before failing, it appears that new higher pressure blend tanks would need to be installed, so that the vent stream from this point could be tied to the incinerator. The new tanks (costing an estimated $140,000 each) would have a 25,000 gallon capacity (each) and would be fabricated from rubber-lined carbon steel.

Note that the Case A and Case B costs for fugitive controls differ substantially. This discrepancy exists because, with Case B, all of the process

water in the plant (about 2,160 liter/min=570 gal/min) must be stripped, as compared with only the more concentrated streams (totaling 160 liter/min) with Case A. This is because the more dilute streams are from the centrifuge, which is one of the sources following the stripper. In Case A, improved stripping would be used to attain the emission limit for the sources following the stripper. In Case B, add-on controls would be used for these sources. Thus, vinyl chloride emissions from the wastewater from the centrifuge would have to be controlled by water stripping in Case B. The increased water loading effects a higher capital cost and a much higher annualized cost for Case B water stripping.

For Case B, the total installed capital cost for the suspension process model plant is $6,714,000, an increase of 50 percent over Case A. Annualized costs for Case B are $5,497,000/yr (8.1¢/kg=3.7¢/lb), an increase of over 300 percent over Case A.

7.2.2.3 Dispersion Polyvinyl Chloride Model Plant

Two alternatives are presented here. The first of these includes all the Case A controls specified for the suspension plant, except improved stripping to 400 PPM. Instead, it is assumed that the slurry is stripped to about 30,000 PPM which is the stripping level corresponding to the baseline, uncontrolled plant. Thus, there are no controls on the slurry blend tank, spray drier, and bulk storage and transfer points. The costs ($2,295,000 capital; $803,000/yr annualized) are the lowest, but so is the overall control efficiency (52 percent). The fugitive control costs for Alternative I are somewhat higher than those for Alternative II, Case A. The reason is that improved resin stripping in Alternative II, Case A would reduce the amount of vinyl chloride in both the resin and the water in which it is contained, so that additional control would not be required for the water from the centrifuge to attain the emission limit. In Case B, in the absence of improved resin stripping, the water from the centrifuge as well as the rest of the plant water would have to be controlled by water stripping to attain the emission limit.

Cases A and B for Alternative II correspond, respectively, to improved slurry stripping to 2000 PPM and incineration. The kinds of control equipment specified for Alternative II, Cases A and B, for the model plant are identical to those already presented for the suspension plant Cases A and B, respectively. However, due to differences in process equipment and production capacity (14 million kg/yr for dispersion versus 68 million kg/yr for suspension), the costs and emission reductions are different. Table 7-9 clearly illustrates this. Table 7-9 also points out the penalties incurred by dispersion process plants if improved stripping cannot remove the monomer to an acceptable level and incineration must be used instead. Annualized costs for Alternative II, Case B, for example, are 35.9¢/kg (16.3¢/lb) whereas Alternative II, Case A, has an annualized cost of 9.9¢/kg (4.5¢/lb). Installed capital costs increase from $3,319,000 for Case A to $5,287,000 for Case B, an increase of nearly 60 percent.

Another Alternative (III) is identified in Chapter 5 for dispersion plants. This would involve the same control configuration as Alternative II, Case A, except that the slurry would be stripped to 400 PPM, rather than 2000 PPM. However, costs for attaining this stripping level are currently unavailable because this degree of stripping has not been demonstrated commercially in dispersion resin manufacture. Therefore, Alternative III does not appear in Table 7-9.

7.2.2.4 Bulk Polyvinyl Chloride Model Plant

Case A here also involves the same controls as Case A for the suspension plant, except that because this kind of plant uses no water in its process, no gasholder-water purge system is installed. Case B, the more stringent cost-wise, postulates the Case A fugitive controls and reactor controls plus

an incinerator-caustic scrubber for the monomer recovery system and product transfer and storage points.

The total installed capital cost for the model bulk plant is $1,312,000 for Case A and $1,606,000 for Case B, an increase of 22 percent. Total annualized costs increase 70 percent from 2.0¢/kg (0.90¢/lb) for Case A to 3.4¢/kg (1.5¢/lb) for Case B.

7.2.3 Cost-Effectiveness of Vinyl Chloride Controls

Table 7-15 presents the cost-effectiveness of alternative vinyl chloride control options. This table is based upon emission factors presented in Chapter 3 of this document plus control costs for control of the model ethylene dichloride plant and the model suspension process polyvinyl chloride plant. The cost-effectiveness of various control options would differ at individual plants due to variances in emissions and individual control costs but the cost-effectiveness ratios presented in Table 7-15 are believed to be generally applicable to existing plants.

The cost-effectiveness relationships in Table 7-15 are based upon estimates of the total annualized costs (including recovery credits) for various control techniques. For example, control of fugitive emissions at the model ethylene dichloride-vinyl chloride plant would result in controlling 765,000 lb/yr of vinyl chloride emissions at a total annualized cost of $366,000/yr. This yields a cost-effectiveness ratio for this control option of 0.48, a ratio that ranks sixth out of ten in terms of overall cost-effectiveness. The most cost-effective option that has been evaluated, control of the monomer recovery system emissions, is twenty-four times more cost-effective than the option of controlling fugitive emissions at ethylene dichloride-vinyl chloride plants.

7.3 ECONOMIC IMPACT ANALYSIS OF ALTERNATIVE CONTROL SYSTEMS

7.3.1 Introduction

The purpose of this section is to present an evaluation of the anticipated economic impact of alternative systems for control of vinyl chloride emissions at ethylene dichloride-vinyl chloride plants and polyvinyl chloride plants. The impact analysis addresses both new and existing ethylene dichloride-vinyl chloride plants and polyvinyl chloride plants.

Two different control scenarios were evaluated for new ethylene dichloride-vinyl chloride plants. These scenarios correspond to Alternative I and Alternative III for ethylene dichloride-vinyl chloride plants, previously discussed in section 7.2. Three control scenarios, corresponding to Alternatives I, II, and III for ethylene dichloride-vinyl chloride plants were evaluated for existing plants. Similarly, different control scenarios were developed for new and existing polyvinyl chloride plants. These scenarios correspond to the polyvinyl chloride plant control options previously presented in section 7.2.

The basic thrust of the analysis was to determine the impact upon plant profitability of various control systems. This examination led to other considerations such as industry-wide price increases resulting from control expenditures and the availability of capital for investment in control equipment. Estimation of potential plant closures also resulted from this analysis.

In addition to the costs that would be required solely for control of emissions to the air, consideration has also been given to the cost of compliance with the EPA water effluent guideline regulations and OSHA regulations. The approximate costs of complying with the water effluent regulations have been calculated based on information received from the Effluent Guidelines Division of EPA. These costs have not been analyzed in detail and are presented only to give a general estimate of what the total EPA-generated costs are for the ethylene

dichloride-vinyl chloride and polyvinyl chloride industries. With regard to OSHA costs, it has been assumed that no significant incremental costs over and above the EPA air emission control costs would be necessitated by the current OSHA regulations. It has been assumed that the cost of OSHA regulations could be generally approximated by the cost of the fugitive control package that has been included in the air emission control cost totals for both ethylene dichloride-vinyl chloride plants and polyvinyl chloride plants. Costs for control of vinyl chloride emissions to the air that are presented in this section, then, include the costs that are believed to be required by the OSHA standards.

7.3.2 Discussion

The analysis of the impact of alternative control levels at both new and existing ethylene dichloride-vinyl chloride plants and polyvinyl chloride plants relies heavily on three main factors. The first of the three factors is the estimation of the level of profitability at a given plant before any controls are applied. This estimation is important since the use of a pre-control profitability level that is too high would tend to underestimate the number of potential closures after controls are applied and use of a pre-control profitability level that is too low would tend to overestimate the number of closure candidates after control. The determination of pre-control profitability is relatively straightforward for new plants but is extremely difficult to achieve with any degree of accuracy for existing plants. Plant-by-plant variations in a number of factors make exact determinations of profitability at existing plants almost impossible. Estimates of existing plant profitabilities before controls have been made, however, but they are intended to be viewed as general indicators rather than specific determinations. All estimates of return on investment for existing plants presented in this report have been developed by EPA based on general plant parameters that are in the public domain. Individual plants

could conceiveably have different profitability levels than the ones presented in this analysis depending upon their unique set of operating conditions and parameters. In general, it is believed that the profitability estimation methodology is sufficiently accurate to use as a basis to reach general conclusions regarding the impact of various control levels but that caution must be used when discussing specific plant profitabilities.

The second factor that weighs heavily in the impact analysis is the estimation of control costs for specific plants. Again, this is relatively straightforward for new, model plants but is difficult for existing plants. Generalized cost algorithms have been used to determine control costs at existing plants and these algorithms may or may not be applicable to any one specific plant. It is believed that the algorithms can be generally applied to existing plants, but any estimation of specific plant costs is difficult.

The third factor that is of considerable importance in the impact analysis is the determination of what actually constitutes adverse economic impact. This particular determination is the key to the economic impact analysis. This analysis has used two primary parameters of economic impact, the first being the 10 percent price increase parameter and the second being the negative return on investment parameter. Based upon conversations with industry representatives it has been assumed that price increases for polyvinyl chloride resins of up to 10 percent could be accommodated by the industry without significant ill effects. Price increases of more than 10 percent, however, were considered to be condusive to appreciable substitution of other products for polyvinyl chloride resins and products. No attempt has been made to test the assumption that a 10 percent price increase would have minimal impact. It is extremely doubtful that such a determination could ever be made on a before-the-fact basis with any degree of accuracy. It would appear that

the use of a 10 percent price increase is a reasonable one, but the exact point at which substitutions or increased imports becomes a significant problem is a matter of conjecture.

The second impact parameter that has been used extensively in this analysis is the negative (or zero) return on investment parameter. This decision rule hypothesized that plant closures would probably occur at the cost level at which individual plant profitability became zero or negative. Whereas this is believed to be a good general parameter to estimate the point at which plant closures would occur it is important to realize that some plants would close at some level of profitability that was greater than zero but still less than that rate which was needed by management in order to justify continued operation of the facility. On the other hand, a plant might be operated at some negative rate of return if the alternative to operating the plant in such a manner was even less attractive from either an economic or a non-economic viewpoint. Therefore, it cannot be predicted with any degree of certainty at which point a given plant will close. The use of negative return on investment, however, is probably the best such indicator if one indicator has to be selected. Whereas the return on investment concept considers capital requirements in an indirect manner, it does not directly address the issue of whether or not incremental control capital can be obtained by a given plant. In general, it can be said that if the post-control return on investment is equal to the pre-control return on investment and the firm is a relatively large one with secure lines of credit and favorable cash flows, then the control capital will probably be raised given that there are not other projects that yield even higher returns. For any given plant, however, it is not possible to determine that amount of capital that could be raised at any given time. As an example, it will be shown in the analysis of control

scenario #2 for existing polyvinyl chloride plants that the total incremental capital requirements are approximately 20 percent of the current replacement value of the plants in the industry and that individual plants are estimated to vary between 10 percent and 38 percent. In this scenario four plants were listed as potential closure candidates based upon a return on investment analysis. If these plants did close, then even though the industry average incremental capital requirement would still be approximately 20 percent the range at existing plants that remained open would be 10 percent to 26 percent. There are no valid and acceptable general decision rules that would allow a decision to be reached regarding the affordability of either percentage. Some firms that had better alternative investments or limited access to funds might find 10 percent unaffordable while some other plant might find that even 26 percent was easily obtainable. It is possible that firms that were not identified as closure candidates based upon a return on investment analysis might possibly close due to lack of capital, but there are not valid means of estimating the number of additional closures, if any, without individual plant data.

7.3.3 Ethylene Dichloride-Vinyl Chloride Plants - Existing Plant Economic Impact Analysis

7.3.3.1 Existing Ethylene Dichloride Plants

One factor that complicates the analysis of the impact of various control levels at existing ethylene dichloride-vinyl chloride plants is that there are four plants in the industry that produce ethylene dichloride but do not produce vinyl chloride. Two of these plants would probably be required to incur air emission control costs. The other two plants would not be affected by the proposed regulation since they do not utilize any oxychlorination process. In order to evaluate the impact of various control levels on ethylene

dichloride-vinyl chloride plants it was necessary to separate these facilities and first calculate the impact of the various control levels on ethylene dichloride plants only. These calculations resulted in an estimated price increase for ethylene dichloride that would then be passed on to vinyl chloride plants. The impact of various control levels at vinyl chloride plants could be coupled with the ethylene dichloride expected price increase to show the cumulative effect of the various control levels at existing vinyl chloride plants.

Costs for control of both air and water emissions are included. Table 7-16 details the development of the water pollution control costs used in the analysis.

Table 7-17 shows the estimated capital costs resulting from imposing Alternative I or Alternative II control levels at existing ethylene dichloride plants. These costs include the estimated costs of complying with the water effluent guideline regulations as well as controlling air emissions. Capital costs for control of air emissions include only estimated costs for control of the ethylene dichloride purification process emission point, since this is the only emission point affected by the proposed regulation. Accordingly, no fugitive controls are included. Capital costs are estimated based on the cost algorithms developed earlier in this chapter. No attempt has been made to refine the cost estimates through specific plant contacts. It is conceded that individual plants could incur control costs that might differ from what is shown in Table 7-17, but it is believed that the estimates reasonably represent the level of control costs that would actually be incurred.

Similarly, Table 7-18 shows the estimated annualized costs resulting from control Alternative I or Alternative II at existing ethylene dichloride plants.

As noted before, no fugitive control costs are included and the costs shown are estimated annualized costs for control of the ethylene dichloride purification process emission point only.

In order to estimate the economic impact upon specific plants of the control costs presented in Table 7-17 and 7-18, it has been necessary to estimate the individual plant return on investment both before and after control. The level of return on investment after control and the relative change in this level from the pre-control level are the bases upon which determinations of adverse economic impact have been made.

The calculation of the pre-control rate of return on investment is based upon the assumption that the level of profitability of any existing plant that produces only ethylene dichloride can be generally estimated by using the economic parameters developed in Table 7-33 for new ethylene dichloride-vinyl chloride plants. This approach has a number of shortcomings, such as the use of new plant economics to estimate existing plant economics and the use of ethylene dichloride-vinyl chloride plant economics to develop ethylene dichloride plant economics. The second limitation was the result of a lack of economic data for ethylene dichloride plants. Since generally similar processes are used for both types of plants, however, and prices and, presumeably, profit levels are similar in nature, it was felt that the use of ethylene dichloride-vinyl chloride plant economics could reasonably be used to approximate ethylene dichloride plant economics. Table 7-19 details the assumptions used to calculate plant profitability levels for existing ethylene dichloride plants and gives an example of the calculational steps.

Once the pre-control profitability levels have been estimated for existing ethylene dichloride plants it is then possible to add to these

plants the estimated additional capital requirements for Alternative I or Alternative II (Table 7-17) and the additional annualized costs (Table 7-18) and then determine the change in profitability at each plant resulting from the estimated control costs. Table 7-20 summarizes the estimated change in profitability at existing ethylene dichloride plants as a result of incurring Alternative I or Alternative II control costs. Note that two separate calculations of post-control return on investment have been made. One calculation shows the level of plant profitability if no price increases are assumed. The second calculation shows the level of profitability if an industry-wide price increase of 0.08¢/lb of ethylene dichloride (0.7 percent of the base price of 12¢/lb) is assumed. The price increase was calculated as the amount required by an average plant to recover the Alternative I or Alternative II annualized control costs, both air and water, and also obtain a 15 percent pre-tax return on the incremental control capital. The 15 percent rate of return was chosen to reasonably approximate the assumed rate of return at a typical existing plant. (Note that Table 7-33 and Table 7-19 show a pre-tax rate of return of 13.4 percent for the new ethylene dichloride-vinyl chloride plant that was used to construct the estimated profitability levels at existing ethylene dichloride plants.)

It is expected that the relatively minor ethylene dichloride price increase of approximately 0.08¢/lb (0.7 percent) will be passed on to ethylene dichloride consumers. This would mean that the most serious decrease in profitability would be a decrease of 17 percent at the Vulcan/Geismar plant followed by a decrease of 16 percent at the Diamond Shamrock/Deer Park plant. With the exception of a 9 percent decrease in estimated profitability at the Ethyl/Houston plant, all other changes in profitability are either minor decreases, no change at all, or increases. No plant is forced into a zero profit position, or a net loss, as a result of Alternative I or Alternative II control costs. For the purpose

of predicting possible plant closures the decision rule that was used was that a plant would remain open unless its estimated control costs, after allowance for an industry-average price increase, were equal to or greater than its estimated pre-control level of profitability. The net result of Alternative I or Alternative II control costs on existing ethylene dichloride plants, then, is to increase the price of ethylene dichloride to vinyl chloride plants and other users of ethylene dichloride and to reduce somewhat the profitability of some of the existing plants in the industry. The minor nature of the price increase is assumed to result in essentially no decrease in demand for ethylene dichloride. This conclusion, when coupled with the conclusion that no existing ethylene dichloride plants will close as a result of Alternative I or Alternative II controls, leads to the judgement that no significant adverse economic impact will accrue to the ethylene dichloride industry as a result of Alternative I or Alternative II controls.

Even though it appears that no significant adverse impact will accrue to the ethylene dichloride industry as a result of Alternative I or Alternative II controls, it is conceivable that capital availability could be a problem for some plants. It is not possible, however, to accurately estimate the magnitude of the problem. It seems logical to assume that those plants that experience either no change or an increase in the post-control return on investment compared to the pre-control return on investment would probably want to raise the capital for the control devices since the post-control earnings would either be improved, or at least not decreased, compared to the pre-control earnings. Conversely, plants that experience a relative decrease in profitability may be hesitant to raise the control capital. So many factors enter into the decision to invest money in an existing plant for pollution control equipment, some of them non-financial, that it is

impossible to say with any certainty whether the management of a given plant will invest additional capital in control devices even if the plant would appear to have a better return on investment after control than it did before control. About the only aspect of the issue that seems clear is that the firms that own the various ethylene dichloride plants are generally large, integrated petrochemical and chemical companies that would supposedly have access to sufficient capital to invest in the additional control equipment. Whether a firm would actually choose to invest those funds in control devices, however, cannot be predicted with any degree of certainty, particularly for those firms that are experiencing post-control decreases in profitability compared to the pre-control case. Since the increases in total plant replacement capital has been calculated to be on the order of 1-4 percent for existing ethylene dichloride plants complying with Alternative I or Alternative II, it would seem that the magnitude of the additional capital requirement would not prove to be a significant obstacle to raising the required capital.

A similar analysis was undertaken for evaluation of Alternative III controls at existing ethylene dichloride plants. Table 7-21 details the estimated capital requirements for Alternative III controls at existing ethylene dichloride plants and is similar in nature to Table 7-17. Table 7-22, similar to Table 7-18, shows the estimated plant-by-plant annualized costs resulting from Alternative III controls. Finally, Table 7-23 shows the estimated change in plant profitability resulting from the imposition of Alternative III control costs on existing ethylene dichloride plants. In this case the estimated profitability is even more markedly decreased for the Diamond Shamrock/Deer Park plant and the Vulcan/Geismar plant. Return

on investment at the Diamond Shamrock/Deer Park facility decreases from an estimated 3.2 percent before control to 1.9 percent after control and after an industry-wide price increase of 0.08¢/lb, a relative decrease of 59 percent. Similarly, estimated profitability decreases by 55 percent for the Vulcan/Geismar plant. In each case, however, even though the decreases in profitability are sizeable, neither decrease is sufficient to force either plant into an estimated loss or zero profit position. This leads to the conclusion that plant closures in the ethylene dichloride industry would not occur even at the Alternative III level, even though estimated plant profitability at the two plants mentioned above would be adversely impacted in a seemingly appreciable manner. Again, the issue of capital availability could be a problem for some plants, but, as was pointed out in a preceding paragraph, not enough is known about the factors influencing such investment decisions to be able to reach any firm conclusions in this area. In the case of Alternative III, additional capital requirements at the plant level over an uncontrolled facility range up to 8 percent, as opposed to a maximum increase of 4 percent for Alternative I or Alternative II. It would seem, however, that this amount would also not prove to be too large to be raised, given that the plant owners decided to do so.

7.3.3.2 Existing Vinyl Chloride Plants

The analysis of the impact of alternative control levels on existing vinyl chloride plants utilizes a similar methodology to the one used in the existing ethylene dichloride plant analysis. As in the previous analysis, the emphasis will be upon the estimated impact of alternative control costs upon plant profitability.

Table 7-24 presents the estimated plant-by-plant incremental capital requirements resulting from the imposition of Alternative I controls, including

water effluent costs, at existing vinyl chloride plants. For those vinyl chloride plants that do not have ethylene dichloride plants associated with them (Monochem/Geismar and Tenneco/Houston), the capital requirements include fugitive controls plus incineration of the vinyl chloride formation and purification process emission point. For those other vinyl chloride plants that have ethylene dichloride plants associated with them the capital costs only include fugitive controls. This is because it has been assumed that the ethylene dichloride purification process emission point and the vinyl chloride formation and purification process emission point can both be controlled with a single incinerator. This incinerator cost has been charged to the ethylene dichloride plant and has been considered in the analyses of the impact of the alternative control levels at existing ethylene dichloride plants.

The estimated plant-by-plant annualized costs resulting from Alternative I controls are shown for existing vinyl chloride plants in Table 7-25. As pointed out in the previous paragraph, all plants with the exception of Monochem/Geismar and Tenneco/Houston are incurring only fugitive controls. The two aforementioned plants are incurring fugitive costs plus annualized costs for incineration of the vinyl chloride formation and purification process emission point. Note that all plants have been assessed a charge corresponding to the estimated industry-wide price increase for ethylene dichloride of 0.08¢/lb. This is the same charge that was utilized in the previous discussion of the impact of various alternatives on existing ethylene dichloride plants.

The impact of Alternative I controls on the estimated profitability of existing vinyl chloride plants is shown in Table 7-26. The calculation of the estimated level of pre-control profitability at existing vinyl

chloride plants shown in Table 7-26 utilized the same methodology as the calculation of pre-control profitability at existing ethylene dichloride plants. This methodology was detailed in Table 7-19. Note that two post-control profitability levels have been calculated. One shows the estimated return on investment for a given plant after control if a price increase is not assumed. The other shows the estimated profitability level that would result if a price increase sufficient to recover industry-average annualized costs plus a 15 percent pre-tax return on capital is assumed to be passed on to the users of vinyl chloride. The price increase assumed in Table 7-26 is 0.36¢/lb, or 3 percent of the base sales price of 12¢/lb of vinyl chloride. It is expected that this price increase will be passed on to the users of vinyl chloride. These users, essentially all of them being polyvinyl chloride producers, are not expected to appreciably reduce their consumption of vinyl chloride when faced with the 3 percent price increase. The polyvinyl chloride producers are expected to attempt to pass along to the fabricators of polyvinyl chloride resins the vinyl chloride price increase. This topic will be discussed in more detail in a subsequent section of this chapter.

Referring to Table 7-26, it is seen that if a price increase of 0.36¢/lb of vinyl chloride is assumed to be passed forward to the polyvinyl chloride producers then none of the plants will be placed in a zero profit or a loss position. Six plants, however, all of them with smaller than average capacities, will suffer a reduction in profitability ranging from a 6 percent reduction to a 53 percent reduction. No plant closures are anticipated as a result of imposing Alternative I control costs on the industry since all plants remain profitable, although marginally so in some instances. As noted before in the section dealing with the analysis of alternative control levels on existing ethylene dichloride plants, it is difficult to reach any firm conclusions

regarding the issue of capital availability for purchase of control equipment for existing plants. Increases in plant capital are estimated to vary between 8-11 percent of estimated replacement capital for Alternative I controls, an amount that would not seem to present a large acquisitional problem particularly since the firms in the vinyl chloride industry are generally the same firms as the firms in the ethylene dicloride industry and are large concerns with supposedly established lines of credit and access to capital funds. As pointed out previously, however, a decision not to invest in a control device could be made no matter what the economics of the situation might indicate due to the presence of other considerations.

It should be realized that a combination of increased capital requirements plus a severe reduction in plant profitability could lead to plant closures. A plant would not necessarily have to experience a loss before the plant owners decided to close it. Even though no closures are expected to result from the imposition of Alternative I controls on the vinyl chloride industry, it must be realized that the possibility of closures does exist.

The costs of complying with Alternative II controls at existing vinyl chloride plants has also been evaluated. The results of this analysis are only slightly different than the results of the Alternative I analysis since only one plant incurs a different level of costs for Alternative II than for Alternative I. Alternative II assumes that the one plant will have to incinerate the oxychlorination process emission point in addition to controlling fugitive emissions and emissions from the vinyl chloride formation and purification process emission points. All other plants are assumed not to incinerate the oxychlorination process emission point. The plant in question may not have to use incineration in order to meet the proposed standard since less expensive control options may be avail-

able. Since the nature and costs of these alternative options are not known, incineration has been used as a worst-case estimate.

Table 7-27 details the estimated capital requirements for the Alternative II control level, including both air emission control costs and water pollution control costs. Similarly, Table 7-28 details the annualized costs estimated for Alternative II controls at existing vinyl chloride plants. Finally, Table 7-29 presents the estimated changes in plant profitability resulting from Alternative II controls. Note that the only change in this table compared to Table 7-26 (Alternative I Profitability Summary) is to change the post-control profitability levels at one plant. This plant now suffers a 15 percent reduction in profitability relative to the base case if Alternative II controls are imposed compared to a 9 percent increase in profitability if Alternative I controls are imposed. (Both calculations assume a price increase for vinyl chloride of 0.36¢/lb.) A similar conclusion regarding the impact of Alternative II controls on existing vinyl chloride plants is reached as was reached in the Alternative I analysis, namely that no closures would result but that plant profitability would be reduced in some cases. Even though one plant incurs an estimated replacement plant capital increase of 13 percent for Alternative II as opposed to 9 percent for Alternative I, it would not seem that this would pose a significant capital availability problem.

Finally, an analysis of Alternative III controls on existing vinyl chloride plants has been evaluated. Table 7-30 details the estimated capital costs for this alternative which assumes that all plants having an oxy-chlorination process emission point would have to incinerate the emissions. Not all plants have this emission point, however, and those that do not incur the same costs for Alternative III as for Alternative II and Alter-

native I. Two of the plants that have an oxychlorination process emission point are already incinerating the emissions in order to meet existing state regulations.

The estimated annualized costs for Alternative III controls at existing vinyl chloride plants, including a charge for higher ethylene dichloride prices resulting from emission control costs, is presented in Table 7-31. Industry-average total costs increase from 0.29¢/lb at the Alternative I level to 0.39¢/lb at the Alternative III level, an increase of 34 percent.

Finally, the impact on plant profitability of the Alternative III controls is shown in Table 7-32. The results are not appreciably different than shown in the previous tables that summarize the Alternative I and Alternative II profitability impacts. As before, no plants are forced into a zero profit or net loss position, assuming that an industry-wide price increase for vinyl chloride of 0.49¢/lb (4 percent of the base price of 12¢/lb) can be passed on to the vinyl chloride users. This leads to the conclusion that no plants would close as a result of complying with the estimated Alternative III costs. Individual plant profitability decreases for six plants, however, ranging from a seemingly minor 2 percent to a seemingly appreciable 55 percent. Again, the most severe impact is experienced by the smaller plants. Increases in estimated plant capital for control equipment are approximately 8-16 percent of the estimated plant replacement capital. In general, the larger increases occur at those plants that also incur the greatest decreases in profitability, a factor that tends to indicate that some closures might occur at the Alternative III control level. It is impossible to state with any certainty, however, that a certain plant might close as a result of the Alternative III control level, but it must be recognized that the possibility of closures does exist at

this level. The possibility of some plant closures also exists at the Alternative I and Alternative II levels, however, so it cannot be said that only at the Alternative III control level does the problem of potential plant closures exist. It is interesting to note that the plants that were the more severely impacted at the Alternative I/Alternative II level are not necessarily the most severely impacted at the Alternative III control level. The impact tends to shift to different firms under the Alternative III scenario instead of just getting worse for the firms impacted in the Alternative I and Alternative II scenarios. This results from the fact that some plants do not have an oxychlorination process emission point to control.

In summary then, it is concluded that the economic impact of the three alternative control levels for existing vinyl chloride monomer plants that have been evaluated is primarily to increase monomer prices on the order of 3-4 percent and reduce the profitability level of some plants, generally the smaller ones, on the order of 2-55 percent. Some other plants, generally the larger ones, experience increases in profitability on the order of 3-31 percent as a result of the alternative control strategies. No plants are expected to close as a result of incurring the alternative control costs, even though the possibility of some plant closures does exist at all three control level. The price increase of 3-4 percent appears to be small enough so that no appreciable reduction in demand for vinyl chloride monomer will occur.

7.3.4. Ethylene Dichloride-Vinyl Chloride Plants - New Plant Economic Impact Analysis

The financial impact of two alternative control levels has been evaluated for a model new ethylene dichloride-vinyl chloride plant. In addition, the impact of meeting only the EPA water effluent guideline regulations has been determined. The results of this analysis are detailed in Table 7-33.

Table 7-33 shows that a new ethylene dichloride-vinyl chloride plant would suffer a decrease in profitability from 6.7 percent to 5.1 percent as a result of meeting the water effluent guidelines. A price increase of 0.17¢/lb of product, or 1.4 percent of the base price of 12¢/lb, would be required to restore the pre-control profitability level of 6.7 percent. Total investment increases from 4.83¢/lb/yr to 5.17¢/lb/yr as a result of adding the water effluent controls, an increase of 7 percent.

A new ethylene dichloride-vinyl chloride plant that does not incinerate the oxychlorination vent is modeled by Alternative I in Table 7-33. This plant would require a total price increase of 0.29¢/lb in order to maintain the precontrol profitability level of 6.7 percent, a relative price increase of 2.4 percent. Total investment increases by 10 percent over the totally uncontrolled plant. It is important to realize that the above statistics include the costs of the water effluent guidelines as well as the costs for control of emissions to the air. The plant that only controlled air emissions would require a price increase of 0.12¢/lb (1.0 percent) and would experience a total capital increase of 3 percent.

A new ethylene dichloride-vinyl chloride plant that did incinerate the oxychlorination vent is modeled by Alternative III in Table 7-33. This plant would require a price increase of 0.44¢/lb (3.7 percent) in order to maintain precontrol profitability. Total investment would increase by 13 percent. Again,

these statistics include water effluent costs. A plant that only controlled air emissions would require a price increase of 0.27¢/lb (2.3 percent) to maintain pre-control profitability. The increase in total investment would amount to 6 percent if only air emission controls were included.

It is believed that the cost increases associated with either Alternative I or Alternative III would not prove to be a significant deterrent to the construction of new ethylene dichloride-vinyl chloride plants. It would appear that the costs of both the effluent regulations and the air emission control requirements at either the Alternative I level or the Alternative III level could be passed on to the polyvinyl chloride producers. This cost pass-on would preserve the pre-control profitability level at the new ethylene dichloride-vinyl chloride plant and the plant owner should have no disincentive to construct the new plant.

Two factors lead to the conclusion that new ethylene dichloride-vinyl chloride plants will be able to raise prices by an amount sufficient to maintain pre-control profitability. The first factor is that existing ethylene dichloride-vinyl chloride plants will also be required to incur control costs of the same magnitude as those calculated for new plants. This industry-wide pollution control cost increase will to be reflected in higher prices for vinyl chloride. A new plant, therefore, will not be at price disadvantage relative to existing plants.

The second factor leading to the conclusion that vinyl chloride prices will increase is that substitutes for vinyl chloride exist only for a very small percentage of the total end-use applications. Almost all of the vinyl chloride that is produced is used in the production of polyvinyl chloride. This lack of substitute raw materials for the polyvinyl chloride producers means that they have little choice other than to accept higher vinyl chloride prices and

then attempt to reflect these higher prices in increased prices to the fabricators of the resins, and ultimately, the consuming public. Whereas it is true that large increases in the price of polyvinyl chloride resins could lead to a decrease in demand for vinyl chloride, it does not appear that vinyl chloride price increases of even 4 percent or so would be enough to cause a significant reduction in demand. An increase of 4 percent in the price of vinyl chloride would translate into an increase of approximately 2 percent in the price of polyvinyl chloride resins. Discussions with industry representatives have led to the conclusion that price increases for polyvinyl chloride resins of up to 10 percent could be tolerated without significant impact so it would appear that a price increase of 4 percent in vinyl chloride could be ultimately passed on to the fabricators of polyvinyl chloride resins with no adverse consequences. This subject of polyvinyl chloride price increases will be addressed in more detail in a subsequent section of this chapter.

It would not appear that capital availability would be a problem for new ethylene dichloride-vinyl chloride plants. The model plant shown in Table 7-33 has a base (uncontrolled) capital requirement of 4.83¢/lb/yr, or $33,810,000. The capital increase at the Alternative III level to 5.44¢/lb/yr would be an increase of $4,270,000 or 13 percent. It would seem that if prices could be raised by an amount sufficient to restore pre-control profitability then it should be possible to generate the additional control capital since it would be earning the same return as the capital that was being used for the uncontrolled plant.

7.3.5 POLYVINYL CHLORIDE PLANTS-EXISTING PLANT ECONOMIC IMPACT ANALYSIS

7.3.5.1 Introduction

In an attempt to estimate the economic impact of alternative control levels at existing polyvinyl chloride plants four control scenarios have been developed. Control scenario #1 is the least stringent and assumes that all dispersion process plants will utilize the Alternative I control system (stripping to 30,000 parts per million) and that all other plants will utilize Case A controls (improved stripping). Control scenario #2 assumes that dispersion process plants will utilize the Alternative II, Case A control system (stripping to 2000 parts per million) while all other plants utilize Case A (improved stripping) controls. Control scenario #3 assumes that dispersion process plants utilize the Alternative II, Case B control system (incineration) and that all other plants will utilize the Case A (improved stripping) control system. Control scenario #4 is the most stringent and assumes that dispersion plants will utilize the Alternative II, Case B (incineration) system and that all other plants will utilize the Case B (incineration) control system. In all of the control scenarios it is the cumulative effect of air and water pollution controls at ethylene dichloride plants, vinyl chloride plants, and polyvinyl chloride plants that is being evaluated. As in previous sections, the methodology of analysis will emphasize price increases, plant profitability levels, and incremental capital requirements.

7.3.5.2 Control Scenario #1

This control scenario assumes that all dispersion plants utilize Alternative I controls (stripping to 30,000 parts per million) and that all other plants utilize Case A (improved stripping) controls.

Table 7-34 details the estimated plant-by-plant capital requirements for control scenario #1. Capital requirements for air emission control systems at

the various plants have been estimated using the cost algorithms developed earlier in this report (Table 7-6). These algorithms, coupled with specific plant information and assumptions regarding process types, reactor sizes, and various other factors led to the estimation of the air pollution control costs. The water effluent control costs at individual plants have been estimated by using the cost information presented earlier in this report (Table 7-16) and supplied by the Effluent Guidelines Division of EPA. With regard to the water pollution control costs, these costs are included to give only a general estimate of the magnitude of effluent guidelines compliance costs. No analysis has been given to these costs since the primary thrust of this report is to estimate the impacts resulting from various air pollution control systems. The capital costs shown in Table 7-34 represent an average increase in estimated replacement plant capital for all affected plants of approximately 19 percent. Individual plant incremental capital requirements are estimated to vary between 9 percent and 37 percent.

The estimated plant-by-plant annualized costs for control scenario #1 are shown in Table 7-35. Note that a charge for vinyl chloride has been included in the cost summary that is the amount necessary to recover industry-average control costs, both air and water, at existing ethylene dichloride-vinyl chloride plants.

In a manner similar to the methodology previously described, it has been possible to estimate the pre-control profitability of existing plants and then determine the change in profitability due to imposition of emission control costs on the uncontrolled plant. The methodology for determining the profitability at existing polyvinyl chloride plants is identical to the methodology employed for existing ethylene dichloride plants and vinyl chloride plants. (Refer to Table 7-19).

It must be emphasized that the profitability levels shown in this section as well as the previous sections dealing with ethylene dichloride plants and vinyl chloride plants were derived from generalized financial information developed for model plants. These profitability levels are thought to generally approximate the profitability levels at existing plants.

Table 7-36 presents a summary of the estimated profitability levels and changes in profitability resulting from imposition of control scenario #1 control costs. Note that the average price increase for this scenario is 2.15¢/lb. Since approximately 10 percent of the industry sales are of dispersion process resins that sell for about 34¢/lb and the other 90 percent of the sales are at about 24¢/lb, this results in an average price for all sales of approximately 25¢/lb. The 2.15¢/lb price increase for scenario #1 is an increase of 8.6 percent in this average price.

Examination of Table 7-36 reveals that there are 4 plants (Occidental/Hicksville, Jennat/Torrance, Jennat/Tucker, and Jennat/Somerset) that are placed in an estimated loss position (negative return on investment) after the average price increase has been passed on to resin users. Another 17 plants experience a net decrease in return on investment due to the imposition of the scenario #1 control costs ranging from 1 percent to 57 percent. The remaining 20 plants either experience no decrease in profitability or else a relative net increase in profitability ranging up to 9 percent. It is estimated that the 4 plants that are placed in the negative profitability position by control scenario #1 would probably be closed unless mitigating circumstances not considered in this analysis came into play. These four plants represent less than 1 percent of the total industry capacity of 2,609,000,000 kg/yr. Based on total polyvinyl chloride industry employment of

approximately 5,600 persons, approximately 30 people are estimated to become unemployed as a result of closing of the 4 aforementioned plants.

The price increase to resin fabricators of 2.15¢/lb (8.6 percent) resulting from control scenario #1 is estimated to result in a price increase to the consumers of the fabricated products of approximately 1-4 percent. This increase in the price of consumer goods fabricated from polyvinyl chloride resins was estimated based on the assumption that the resin cost amounted to 10-50 percent of the final cost of the fabricated product. The remainder of the fabricated product cost would be comprised of fabrication labor, utilities, depreciation, interest, and miscellaneous overhead charges. A resin price increase of 8.6 percent (which translates into a maximum fabricated goods price increase of 4 percent) is not believed to be sufficient to result in any appreciable substitution of other products for polyvinyl chloride fabricated resins or in any appreciable increase in imports of either polyvinyl chloride resins or fabricated products. This conclusion is based upon the assumption that a relative price increase of 10 percent is the maximum price increase that could be passed forward to the fabricators of polyvinyl chloride resins and, ultimately, the consuming public before appreciable reductions in demand for polyvinyl chloride products took place. This assumption is based upon conversations with industry representatives. It would seem that the 10 percent price increase parameter is a reasonable one upon which to base conclusions of economic impact, but it is granted that a more sophisticated analytical tool would be of much value.

In the event that no price increase for polyvinyl chloride resins could be obtained, Table 7-36 reveals that one additional plant (Keysor-Century/Saugus) would be placed in a negative profitability position and might be subject to closure. This would mean that a total of five plants

might close if control scenario #1 was implemented without any price increases for polyvinyl chloride resins.

7.3.5.3 Control Scenario #2

This control scenario assumes that all dispersion plants utilize Alternative II, Case A controls (stripping to 2000 parts per million) and that all other plants use Case A (improved stripping) controls.

Table 7-37 shows the estimated capital requirements for all existing polyvinyl chloride plants for control scenario #2. The estimation or these costs employed the same methodology as described above for control scenario #1. The capital costs shown in Table 7-37 represent an average replacement plant capital increase for all affected plants of approximately 20 percent. Individual plant capital requirements are estimated to vary between 10 percent and 38 percent.

Table 7-38 details the estimated plant-by-plant annualized costs for control scenario #2. These costs, as do the capital costs shown in Table 7-37, include charges for control of water effluent emissions. Table 7-38 also includes a cost pass-on from ethylene dichloride-vinyl chloride plants to recover costs for control of air and water emissions at these facilities.

Table 7-39 shows the impact on plant profitability of the costs resulting from control scenario #2. Note that in this case the estimated average price increase for all resins is 2.35¢/lb, or 9.4 percent of the overall average resin price of 25¢/lb. Table 7-39 shows that the 4 plants that were placed in a negative profitability position by control scenario #1 (Occidental/Hicksville, Jennat/Torrance, Jennat/Tucker, Jennat/Somerset) are also placed in a negative profitability position by control scenario #2. There are no additional firms placed in a negative profitability position by this scenario, assuming an average price increase of 2.35¢/lb. Of the remaining 37 poly-

vinyl chloride plants, 18 suffer a net decrease in profitability of up to 50 percent. The remaining 19 plants have increased profitabilities as a result of the control scenario ranging up to a net increase of 13 percent.

In this case the average price increase to resin fabricators is 2.35¢/lb, (9.4 percent). Again assuming that resin prices make up 10-50 percent of the cost of the fabricated product, the price increases to the final users of the fabricated products is estimated to be on the order of 1-5 percent, an amount not believed to be sufficient to cause significant substitution or imports. The anticipated plant closures for control scenario #2 are the same as control scenario #1 (Occidental/Hicksville, Jennat/Torrance, Jennat/Tucker, and Jennat/Somerset) and would result in a loss of domestic polyvinyl chloride capacity of less than 1 percent and a loss of approximately 30 jobs.

As in the case a control scenario #1, one additional plant (Keysor-Century/Saugus) would be placed in a negative profitability position if an average price increase was not possible. This would mean that a total of five plants might close if control scenario #2 was implemented without any price increases.

7.3.5.4 Control Scenario #3

This control scenario assumes that all dispersion plants utilize Alternative II, Case B controls (incineration) and all other plants use Case A (improved stripping) controls.

Table 7-40 shows the estimated capital requirements, including water pollution control capital, for control scenario #3. Once again, the estimation methodology was the same as described for control scenario #1. The capital costs shown in Table 7-40 represent an average replacement plant capital increase for all affected plants of approximately 24 percent.

Individual replacment plant capital requirements are estimated to vary between 10 percent and 44 percent.

Table 7-41 shows the estimated annualized costs, including water pollution control costs, for control scenario #3. As in previous scenarios, a charge for air and water pollution control costs at ethylene dichloride-vinyl chloride plants has been included.

Table 7-42 details the estimated impact on plant profitability resulting from control scenario #3. For this case the average resin price increase is estimated to be 3.56¢/lb or 14.2 percent of the overall average resin price of 25¢/lb. Table 7-42 further indicates that a total of 7 plants (Occidental/ Hicksville, Jennat/Torrance, Jennat/Tucker, Jennat/Somerset, Monsanto/ Springfield, Union Carbide/South Charleston, and Uniroyal/Painesville) would be placed in a negative profitability position and would be potential closure candidates. Four of the aforementioned plants were identified as potential closure candidates for control scenario #1 and scenario #2. Of the remaining 34 plants, 10 would suffer relative net decreases in profitability of up to 74 percent while 24 plants would experience relative net increases in profitability ranging up to 40 percent.

The above discussion assumes that an average price increase of approximately 3.56¢/lb (14.2 percent) will be passed on to resin fabricators. It will be recalled from the discussion of the impact of control scenario #1 on existing polyvinyl chloride plants that a 10 percent price increase was believed to be the point at which appreciable substitution of other products for polyvinyl chloride would occur. It is possible, then, that a price increase of 14.2 percent would not occur. This would mean that all firms would experience lower post-control profitability levels than shown on Table 7-42. Accordingly, some additional plant closures might occur depending upon the actual amount of

the price increase. In this case, however, if the price increase was limited to 10 percent there would be no additional closure candidates in addition to the 7 mentioned above.

In this case the increase in the price of fabricated products would be expected to be on the order of 1-7 percent given that a net resin price increase of approximately 14 percent could be effected. A resin price increase of 10 percent is expected to result in an increase to the fabricated product consumer of 1-5 percent.

The seven plants mentioned above comprise approximately 5 percent of the total domestic polyvinyl chloride capacity. It is estimated that about 250 jobs would be lost if these plants closed.

Table 7-42 reveals that a total of 13 plants might close if no price increases for polyvinyl chloride resins could be obtained and control scenario #3 was implemented. These fourteen plants comprise approximately 18 percent of the total industry capacity and are estimated to employ approximately 1000 people.

7.3.5.5 Control Scenario #4

This control scenario assumes that all dispersion plants will utilize Alternative II, Case B (incineration) controls and that all other plants will utilize Case B (incineration) controls.

Table 7-43 details the estimated capital requirements, including water pollution control capital, for control scenario #4. The capital costs shown in Table 7-43 represent an average replacement plant capital increase for all affected plants of approximately 29 percent. Individual plant capital requirements are estimated to vary between 12 percent and 45 percent. Table 7-44 details the annualized cost requirements, including a charge for controls at the ethylene dichloride-vinyl chloride plant for this scenario.

Again, the methodology used in Tables 7-43 and 7-44 is identical to the one utilized in the analysis of the preceding scenarios.

The estimated impact upon plant profitability resulting from control scenario #4 is shown in Table 7-45. Note that in this case the average price increase has been calculated to be 6.04¢/lb (24.2 percent). Assuming a price increase of this magnitude results in 6 plants experiencing a post-control return on investment that is either zero or negative. These 6 plants (Occidental/Hicksville, Jennat/Torrance, Jennat/Tucker, Jennat/Somerset, Monsanto/Springfield, and Union Carbide/South Charleston) would be potential closure candidates. Of the remaining 35 plants, 13 experience a relative net decrease in profitability of up to 78 percent as a result of control scenario #4 and 22 plants either experience no net change or else a relative net increase in profitability of up to 81 percent.

The statistics presented above are based upon a price increase of 24.2 percent. If the actual price increase in the industry was limited to 10 percent for reasons cited previously, it is estimated that 4 more plants (Diamond Shamrock/Delaware City, Keysor-Centory/Saugus, Pantasote/Passaic, and Uniroyal/Painesville) would join the list of closure candidates.

The net result of a 24.2 percent increase in resin prices would be an estimated price increase for fabricated products of 2.5-12 percent, an amount that could conceivably lead to appreciable substitution or increased imports. It was estimated that 6 plants might close if control scenario #4, including a 24.2 percent price increase, was implemented. These six plants account for approximately 3 percent of the total industry capacity are estimated to employ 150 people.

If only a 10 percent price increase was effected, then theoretically little or no substitution or increased imports would occur, but a total of

10 plants might be expected to close. These ten plants account for approximately 8 percent of the total industry capacity and are estimated to employ approximately 450 people. In this case consumer price increases are anticipated to be on the order to 1-5 percent.

Table 7-45 indicates that a total of 30 plants might close if no price increase was obtained and control scenario #4 was implemented. These 30 plants account for approximately 58 percent of total industry capacity and are estimated to employ 3200 people.

7.3.6 Polyvinyl Chloride Plants - New Plant Economic Impact Analysis

7.3.6.1 Introduction

The economic impact of various air emission control levels on new suspension, dispersion, and bulk process polyvinyl chloride plants has been evaluated. For suspension process plants only one level of emission control has been evaluated but two methods if attaining the emission level are discussed - an improved slurry stripping system and an incineration system. For dispersion process plants two alternative emission levels are presented, one of which could be met by a system based on resin stripping to existing levels and the other could be met by either a system based on stripping to 2000 parts per million or an incineration system. For bulk process plants only one level of emission control has been evaluated. As with the suspension process plant either an improved stripping system or an incineration system could be used to attain the emission control level at the bulk process plant.

7.3.6.2 New Suspension Process Plants

The results of utilizing various control systems at a typical new suspension process polyvinyl chloride plants is shown in Table 7-46. Note that the uncontrolled suspension process plant generates a return on investment of 9.9 percent. This rate of return decreases to 8.2 percent for a plant that

complies with the water effluent guidelines and receives monomer from an existing ethylene dichloride-vinyl chloride plant that incurs water effluent costs plus Alternative II costs. The pre-control rate of 9.9 percent could be maintained at the plant with a price increase of 0.71¢/lb, an increase in the 24¢/lb base price for suspension process polyvinyl chloride of 3.0 percent. Total plant capital requirements increase from 19.75¢/lb/yr in the case of the uncontrolled plant to 20.59¢/lb/yr for the plant that complies with the water effluent guidelines and receives vinyl chloride from an Alternative II-controlled plant, an increase of 4 percent.

Table 7-46 shows that imposition of the Case A (improved stripping) control level, including water effluent charges and increased vinyl chloride costs, results in a required price increase of 8.8 percent if pre-control profitability is to be maintained. Total plant capital increases by 19 percent in this case. The imposition of only the air emission control costs on the uncontrolled plant results in a price increase of 5.9 percent and a capital increase of 15 percent. It is also seen from Table 7-46 that the Case B (incineration) control system results in a required price increase of 21.9 percent if pre-control profitability is to be maintained. The price increase resulting from the imposition of only air emission controls would be 18.9 percent. Total plant capital increases by 27 percent at the Case B level, of which 23 percent is required for air emission controls.

It is believed that a new suspension process polyvinyl chloride plant would be constructed in the Case A scenario, but that a new plant probably would not be constructed in the Case B scenario. Even if a new suspension process plant did not incur any water effluent costs and did not incur any increased charges for vinyl chloride it would still probably not be constructed if Case B (incineration) controls were applied. This conclusion is based upon the assumption that

a relative price increase of 10 percent is the maximum price increase that could be passed forward to the fabricators of polyvinyl chloride resins and, ultimately, the consuming public before appreciable reductions in demand for polyvinyl chloride products took place. As stated earlier, this assumption is based upon conversations with industry representatives.

Referring back to Table 7-46, it is seen that the Case A scenario, which includes air emission control costs and water effluent costs at the suspension process polyvinyl chloride plant as well as increased vinyl chloride prices due to air and water controls at ethylene dichloride-vinyl chloride plants, results in a price increase of 8.8 percent being required to maintain the pre-control profitability level, a level somewhat below the 10 percent cut-off level. The Case B scenario, however, results in a price increase of 21.9 percent, well above the 10 percent cut-off point. Even if all water effluent costs were not incurred and no increase in vinyl chloride prices was incurred either, the resulting costs for the air emission controls alone would result in a price increase of 19 percent which is still well above the cut-off point. If it can be assumed that the fugitive control package used at the model suspension process plant duplicates the OSHA-required controls then the price increase for EPA-generated air controls would drop from 19 percent to 16 percent, a level that is still appreciably higher than the 10 percent cut-off point.

Total plant capital requirements at a typical new suspension process polyvinyl chloride plant increase by approximately 19 percent as a result of adding Case A controls. This increase of 19 percent is not believed to be large enough to deter construction of a new facility. This conclusion is drawn based on the assumption that prices for polyvinyl chloride will be raised by an amount sufficient to generate the same profit on the incremental control capital as is being earned on the uncontrolled plant capital. The new facility will not

be the only plant that will have to raise prices. It was shown in the preceding section that existing plants will also be forced to raise prices by approximately 10 percent so any new facility that incurs a price increase will be competing with existing firms that have also incurred approximately the same price increase.

In summary, then, it appears that utilization of the Case A (improved stripping) control system would not be a deterrent to the construction of new suspension process polyvinyl chloride plants but that utilization of the Case B (incineration) control system would seriously deter the construction of any new suspension process plant.

7.3.6.3 New Dispersion Process Plants

The results of utilizing various control systems at a new dispersion process polyvinyl chloride plant of 14,000,000 kg/yr capacity are shown in Table 7-47. Note that the uncontrolled plant generates a relatively low return on investment of 3.1 percent. Imposition of the water effluent costs and the increased vinyl chloride costs due to controls at the ethylene dichloride-vinyl chloride plant leads to a reduction in profitability to 2.5 percent and would require a price increase of 1.7 percent to maintain the pre-control profitability level of 3.1 percent. Total plant capital requirements increase from 55.75¢/lb/yr to 56.59¢/lb/yr, an increase of 1.5 percent. The model dispersion plant that utlizes the Alternative I control system (resin stripping to 30,000 parts per million) plus incurs water effluent costs and increased vinyl chloride charges experiences a drop in profitability to 0.1 percent if no price increase is obtained. A price increase of 11.0 percent would be required to restore the pre-control profitability level of 3.1 percent. Total plant capital in this case increases by 15 percent. Similarly, the model dispersion plant in the Alternative II, Case A scenario would

require a price increase of 17.1 percent to maintain pre-control profitability and would experience an increase in total capital of 21 percent. The Alternative II, Case B scenario leads to a price increase of 52.9 percent and a total capital increase of 33 percent.

Using the 10 percent price increase parameter discussed previously leads to the conclusion that a new dispersion process polyvinyl chloride plant of approximately 14,000,000 kg/yr capacity would not be constructed at either the Alternative II, Case A control level or the Alternative II, Case B control level. It is questionable whether a new dispersion process plant of approximately 14,000,000 kg/yr capacity would be constructed at the Alternative I control level. The required price increase to maintain pre-control profitability at 11.0 percent is admittedly higher than the 10 percent cut-off level, but only marginally so.

It is altogether possible, however, that new disperison process polyvinyl chloride plants of the size modelled in Table 7-47 would not be constructed in the future even if no pollution control regulations, either air or water, were applied to them. This is because smaller plants apparently have marginal profitabilities before any control costs are incurred. It is likely that larger dispersion process plants would be constructed in the future, however, due to the fact that economies of scale would make these facilities more profitable than smaller plants. Table 7-48 details the estimated effect of economies of scale on dispersion process polyvinyl chloride plants by showing the economics of an uncontrolled 45,000,000 kg/yr plant and how these economics are altered by imposition of various control systems. Note that the uncontrolled plant with a capacity of 45,000,000 kg/yr has a return on investment in the base (uncontrolled) case of 7.5 percent as opposed to 3.1 percent for the 14,000,000 kg/yr plant. For the larger plant it is seen

that economies of scale put the price increase to maintain pre-control profitability for the Alternative II, Case A option (stripping to 2000 parts per million) at 10.6 percent, only marginally above the 10 percent cut-off figure. The Alternative II, Case B scenario (incineration) is well above the 10 percent cut-off point and would remain so even if all other control costs except for the EPA-generated air emission costs were removed.

It is concluded based upon the information presented in Table 7-47 and 7-48 that new dispersion process plants will be able to comply with all emission control costs required by the Alternative II, Case A scenario (stripping to 2000 parts per million), including water pollution control costs, at large dispersion process plants (approximately 45,000,000 kg/yr capacity or greater) but not at plants that are appreciably smaller than 45,000,000 kg/yr capacity. Smaller plants, however, on the order of 14,000,000 kg/yr capacity would probably only be able to comply with the Alternative I scenario (stripping to 30,000 parts per million).

Total plant capital costs in the Alternative II, Case A scenario increase by approximately 14 percent for a plant with a capacity of 45,000,000 kg/yr, an amount that would not appear to appreciably deter construction of new facilities since pre-control profitability is expected to be maintained through price increases. As was pointed out in the preceding section, an industry-wide price increase of approximately 10 percent will be caused by the impact of control regulations on existing plants. The new plant, therefore, will be able to raise prices and generate a pre-control level of return on its total capital investment, including the incremental control capital requirement.

In summary, then, it is concluded that the imposition of Alternative I controls (stripping to 30,000 parts per million) would probably not be a deterrent to the construction of new dispersion process polyvinyl chloride

plants except possibly those of very small capacities, that imposition of Alternative II, Case A controls (stripping to 2000 parts per million) would not be a deterrent to the construction of large new dispersion plants with capacities of 45,000,000 kg/yr or more, and that imposition of Alternative II, Case B controls (incineration) would prove to be a serious deterrent to the construction of any new dispersion process polyvinyl chloride plants.

7.3.6.4 New Bulk Process Plants

The results of utilizing various control systems on a typical new bulk or polyvinyl chloride plant are shown in Table 7-49. This plant has a return on investment for the uncontrolled case of 9.3%. This base plant return on investment decreases to 7.7 percent for the plant that incurs water pollution control costs and increased costs for vinyl chloride. This case requires a 2.9 percent increase in prices to maintain the pre-control profitability level of 9.3 percent. Total plant capital increases from 21.15¢/lb/yr to 21.99¢/lb/yr, an increase of 4 percent. The plant that then incurs Case A (improved stripping) control costs in addition to the water effluent costs and the increased vinyl chloride costs requires a price increase of 7.7 percent to maintain pre-control profitability and experiences a total plant capital increase of 10 percent. Similarly, the plant that incurs Case B (incineration) control costs in addition to the effluent costs and the increased vinyl chloride costs requires a price increase of 10.5 percent to maintain pre-control profitability and incurs a total plant capital increase of 12 percent.

It is concluded, based upon the results shown in Table 7-37 and the analytical methodology used previously, that a significant barrier to the construction of new bulk process polyvinyl chloride plants would not exist for either the Case A (improved stripping) control scenario or the Case B (incineration) control scenario. Even though the price increase required to maintain pre-control profitability in the Case B situation is marginally higher than the cut-off point, it does not seem to be an appreciable difference.

7.3.7 Summary

7.3.7.1 Ethylene Dichloride-Vinyl Chloride Plants

The following is a summary of the economic analysis of alternative control levels at new and existing ethylene dichloride-vinyl chloride plants:

1. New ethylene dichloride-vinyl chloride plants are judged to be able to afford either Alternative I controls (no control of the oxychlorination vent) or Alternative III controls (control of the oxychlorination vent).

   Incremental capital requirements for a typical new facility with a capacity of 318 million kg/yr (700 million lb/yr) are as follows:

	Incremental Control Capital ($ Millions)	
	Alt. I	Alt. III
Air	$0.9	1.9
Water	2.4	2.4
Total	$3.3	4.3
% Increase Over Uncontrolled Plant	10%	13%

   The price increase required to maintain pre-control return investment at the typical new facility mentioned above are:

	Price Increase	
	Alt. I	Alt. III
Air	0.12¢/lb	0.27
Water	0.17	0.17
Total	0.29 ¢/lb	0.44
% Increase Over Base Price of 12¢/lb:	2.4%	3.7%

2. Existing ethylene dichloride plants are judged to be able to comply with all control options without significant adverse economic impact. The following table lists the relevant parameters considered:

	Control Alternative		
	I	II	III
Estimated Plant Closures:	None	None	None
Net Change in Return on Investment After Price Increase			
Range:	27%-(17%)	27%-(17%)	27%-(59%)
Industry Average:	0	0	(1%)
Increase in Estimated Replacement Plant Capital			
Range:	1-4%	1-4%	1-8%
Industry Average:	3%	3%	3%
Industry Total Incremental Control Capital ($ Millions)			
Air Controls:	$5.1	5.1	6.6
Water Controls:	11.9	11.0	11.9
Total:	17.0	17.0	18.5
Price Increase Due To:			
Air Controls:	0.046¢/lb	.046	.046
Water Controls:	.034	.034	.034
Total:	.080 ¢/lb	.080	.080
% Increase Over Base Price of 12¢/lb	0.7%	0.7%	0.7%

3. Existing vinyl chloride plants are judged to be able to comply with all control options without significant adverse economic impact. The following table lists the relevant parameters considered:

	Control Alternative		
	I	II	III
Estimated Plant Closures:	None	None	None
Net Relative Change in Return on Investment After Price Increase			
Range:	9%-(53%)	9%-(53%)	31%-(55%)
Industry Average:	4%	0	4%
Increase in Estimated Replacement Plant Capital			
Range:	8-11%	8-13%	8-16%
Industry Average:	8%	9%	11%
Industry Total Incremental Control Capital ($ Millions)			
Air Controls:	$8.7	10.3	19.6
Water Controls:	23.0	23.0	23.0
Total:	$31.7	33.3	42.6
Price Increase Due to:			
Air Controls:[1]	0.19¢/lb	0.19	0.32
Water Controls:[1]	0.17	0.17	0.17
Total:[1]	0.36¢/lb	0.36	0.49
% Increase Over Base Price of 12¢/lb	3.0%	3.0%	4.1%

[1]Includes control cost pass-on from ethylene dichloride plants.

7.3.7.2 Polyvinyl Chloride Plants

The following is a summary of the economic analysis of various control levels at new and existing polyvinyl chloride plants:

1. Typical new suspension process polyvinyl chloride plants are judged to be able to afford Case A (improved stripping) controls but unable to afford Case B (incineration) controls.

   The incremental capital requirements for a new suspension process plant with a capacity of 68 million kg/yr (150 million lb/yr) are as follows:

	Incremental Control Capital ($ Millions)	
	Case A	Case B
Air Controls:	4.4	6.7
Water Controls:	1.3	1.3
Total:	5.7	8.0
% Increase Over Uncontrolled Plant Capital:	19%	27%

   The price increase required to maintain pre-control return on investment at the new suspension process plant is:

	Price Increase	
	Case A	Case B
Air Controls:[1]	1.59¢/lb	4.74
Water Controls:[1]	0.52	0.52
Total:[1]	2.11¢/lb	5.26
% Increase Over Base Price is 24¢/lb	8.8%	21.9%

[1] Includes control cost pass-on from ethylene dichloride-vinyl chloride plant.

2. The imposition of Alternative I controls (stripping to 30,000 parts per million) would probably not be a deterrent to the construction of new dispersion process plants except possibly those of very small capacities. The imposition of Alternative II, Case A controls (stripping to 2,000 parts per million) would probably not be a deterrent to the construction of large new plants with capacities of 45 million kg/yr (100 million lb/yr) or more. The imposition of Alternative II, Case B controls (incineration) would probably be a serious deterrent to the construction of any new dispersion process polyvinyl chloride plants.

The capital requirements for two sizes of new dispersion plants are as follows:

	14 Million kg/yr (30 Million lb/yr) Incremental Control Capital ($ Millions)		
	Alt. I	Alt. II Case A	Alt. II Case B
Air Controls:	2.3	3.4	5.3
Water Controls:	0.2	0.2	0.2
Total:	2.5	3.6	5.5
% Increase Over Uncontrolled Plant Capital:	15%	21%	33%

	45 Million kg/yr (100 Million lb/yr) Incremental Control Capital ($ Millions)		
	Alt. I	Alt. II Case A	Alt. II Case B
Air Controls:	$2.8	4.8	12.3
Water Controls:	0.8	0.8	0.8
Total:	3.6	5.6	13.1
% Increase Over Uncontrolled Plant Capital:	9%	14%	34%

The price increases required to maintain pre-control return on investment at alternative control levels for two sizes of new dispersion plants are as follows:

	14 Million kg/yr (30 Million lb/yr) Price Increase		
	Alt. I	Alt. II Case A	Alt. II Case B
Air Controls:[1]	3.4¢/lb	5.41	17.58
Water Controls:[1]	0.40	0.40	0.40
Total:[1]	3.74¢/lb	5.81	17.98
% Increase Over Base Price of 34¢/lb	11.0%	17.0%	52.9%

[1]Includes control cost pass-on from ethylene dichloride-vinyl chloride plants.

	45 Million kg/yr (100 Million lb/yr) Price Increase		
	Alt. I	Alt. II Case A	Alt. II Case B
Air Controls:[1]	1.62%/lb	3.13	13.30
Water Controls:[1]	0.47	0.47	0.47
Total:[1]	2.09¢/lb	3.60	13.77
% Increase Over Base Price of 34¢/lb	6.2%	10.6%	40.5%

[1]Includes control cost pass-on from ethylene dichloride-vinyl chloride plants.

3. New bulk process plants would probably not be precluded from construction by either Case A controls (improved stripping) or Case B controls (incineration).

The incremental capital requirements for new bulk process plant with a capacity of 45 million kg/yr (100 million lb/yr) are as follows:

	Incremental Control Capital ($ Millions)	
	Case A	Case B
Air Controls:	$1.3	1.6
Water Controls:	0.8	0.8
Total:	$2.1	2.4
% Increase Over Uncontrolled Plant Capital	10%	12%

The price increases required to maintain pre-control return on investment are as follows:

	Price Increase	
	Case A	Case B
Air Controls:[1]	1.34¢/lb	2.02
Water Controls:[1]	0.50	0.50
Total:[1]	1.84¢/lb	2.52
% Increase Over Base Price of 24¢/lb	7.7%	10.5%

[1]Includes cost pass-on from ethylene dichloride-vinyl chloride plants.

4. Four control scenarios for existing polyvinyl chloride plants have been evaluated. Control scenario #1 assumes that all dispersion process plants will utilize Alternative I controls (stripping to 30,000 parts per million) and that all other plants will utilize Case A controls (improved stripping). Control scenario #2 assumes that all dispersion process plants will utilize Alternative II, Case A controls (stripping to 2,000 parts per million) and that all other plants will use Case A controls (improved stripping). Control scenario #3 assumes that all dispersion plants will utilize Alternative II, Case B controls (incineration) and that all other plants will use Case A controls (improved stripping). Control scenario #4 assumes that all dispersion plants will use Alternative II, Case B controls (incineration) and that all other plants will use Case B controls (incineration). The economic impact of complying with the various control scenarios is summarized below:

	Control Scenario			
	#1	#2	#3	#4
Estimated Plant Closures:	4	4	7	6
% of Total Plants:	10%	10%	17%	15%
% of Total Capacity:	0.5%	0.5%	4.7%	2.8%
Estimated Job Losses:	30	30	250	150
Net Relative Change in Return on Investment After Price Increase:				
Range:[1]	9%-(57%)	13%-(50%)	40%-(74%)	81%-(78%)
Industry Average:	0	0	0	0

[1] Excluding estimated closure candidates.

	Control Scenario			
	#1	#2	#3	#4
Percent Increase in Total Estimated Replacement Plant Capital:				
Range:	9%-37%	10-38%	10-44%	12-45%
Industry Average:	10%	20%	24%	29%
Total Industry Incremental Control Capital ($ Millions)				
Air Controls:	$167.4	183.0	225.6	293.3
Water Controls:	48.3	48.3	48.3	48.3
Total:	215.7	231.3	273.9	341.6
Price Increase (¢/lb) Due to				
Air Controls:[1]	1.63	1.83	3.04	5.52
Water Controls:[1]	0.52	0.52	0.52	0.52
Total:[1]	2.15	2.35	3.56	6.04
% Increase Over Base Industry Weighted Average Price of 25¢/lb	8.6%	9.4%	14.2%	24.2%
Estimated Price Increase in Consumer Goods	1-4%	1-5%	1-7%	2.5-12%
Estimated Impact of Price Increase on Substitution, Imports	Negligible	Negligible	Moderate	Substantial

[1] Includes control cost pass-on from ethylene dichloride-vinyl chloride plants.

5. In the event that prices for polyvinyl chloride resins could not be increased, it is estimated that 5 plants might choose closure over control if either control scenario #1 or control scenario #2 was implemented. These five plants account for approximately 1 percent of total industry capacity and are estimated to employ a total of 60 people. If control scenario #3 was implemented without a price increase it is estimated that 13 plants might close. These 13 plants account for approximately 18 percent of total industry capacity and are estimated to employ a total of 1000 people. If control scenario #4 was implemented without a price increase it is estimated that 30 plants might close. These 30 plants account for approximately 58 percent of total industry capacity and are estimated to employ a total of 3200 people.

6. The impact upon the industry of current OSHA regulations has been determined assuming that a) the cost for OSHA controls can be approximated by the cost of the fugitive control package required by all EPA alternatives, and b) there are no OSHA costs incremental to the EPA-generated costs. Given these assumptions it was determined that the OSHA regulations would have the same impact on plant closures as either control scenario #1 or scenario #2, that is, four plants would be expected to close. The EPA requirements, then, would have no incremental effect on plant closures in the industry until the levels of control represented by scenario #3 and scenario #4 were attained. The above assumptions yield estimated OSHA capital requirements of approximately $37 million of which $29 million would be required at polyvinyl chloride plants and $8 million would be required at ethylene dichloride-vinyl chloride plants. Estimated OSHA-required annualized costs would be

$25 million of which $19 million would be required at polyvinyl chloride plants and $6 million would be required at ethylene dichloride-vinyl chloride plants. The price increase in polyvinyl chloride resins resulting from the above costs would be approximately 0.5¢/lb, or 2.0 percent of the current average price of 25¢/lb.

7.4 REFERENCES

1. Stanford Research Institute, "Ethylene Dichloride", Chemical Economics Handbook, January 1972, p. 651.5031B.

2. Stanford Research Institute, "Ethylene", Chemical Economics Handbook, February, 1975, pp. 648.5053Y-648.5054G.

3. In-Depth Study of Vinyl Chloride Production, Houdry Division of Air Products and Chemicals, December 6, 1974, p. PVC 6-11.

4. Stanford Research Institute, "Polyvinyl Chloride Resins", Chemical Economics Handbook, March, 1975, p. 580.1882M.

5. Stanford Research Institute, "Polyvinyl Chloride Resins", Chemical Economics Handbook, September 1973, p. 580.18820.

6. Foster D. Snell, Inc., Economic Impact Studies of the Effects of Proposed OSHA Standards for Vinyl Chloride, September 27, 1974, p. III-3.

7. Stanford Research Institute, "Polyvinyl Chloride Resins:, Chemical Economics Handbook, March, 1975, pp. 580.1883 Y,Z.

8. Compiled from data submitted to EPA under Section 114 of the Clean Air Act.

9. Arthur D. Little, Inc., Vinyl Chloride Monomer Emissions from the Polyvinyl Chloride Processing Industries, May, 1975. (Draft Report to EPA).

10. Foster D. Snell, Inc., op. cit., Exhibit III-14.

12. Foster D. Snell, Inc., op. cit., p. III-3 and p. III-8; Arthur D. Little, Inc. United States Polyvinyl Chloride Industry, Impact Analysis, August 1974, p. 1.

13. Chemical Marketing Reporter, July 14, 1975.

14. Hydrocarbon Processing, May, 1974, p. 83.

15. Stanford Research Institute, op. cit., pp. 580.1883V-580.1883W.

16. ibid.

17. ibid.

Table 7-1

Vertical Integration in the EDC/VCM/PVC Industry

Company	Plant Capacities (Millions of Kilograms/Yr): EDC	VCM	PVC
Air Products	0	0	95
Allied Chemical	295	155	0
B. F. Goodrich	455	455	400
Borden	0	0	145
Continental Oil	455	330	220
Diamond Shamrock	120	0	170
Dow Chemical	1,615	555	45
Ethyl Corporation	370	190	80
Firestone	0	0	180
General Tire	0	0	230
Georgia-Pacific	0	0	100
Goodyear	0	0	95
Great American Chemical	0	0	30
Jennat	0	0	7
Keysor-Century	0	0	15
Monochem, Inc.	0	135	0
Monsanto	0	0	30
Occidental Petroleum	0	0	82
Pantasote Company	0	0	35
PPG Industries	835	360	0
Robintech, Inc.	0	6	165
Shell Oil Co.	1,075	730	0

Table 7-1 (Con't)

Vertical Integration in the EDC/VCM/PVC Industry

Company	Plant Capacities (Millions of Kilograms/Yr): EDC	VCM	PVC
Shintech	0	0	50
Stauffer Chemical Co.	135	75	150
Tenneco Chemicals, Inc.	0	115	215
Union Carbide	140	0	160
Uniroyal Inc.	0	0	50
Vulcan	110	0	0
TOTALS:	5,605	3,100	2,609

SOURCE: Tables 3-1,2,3.

Table 7-2

1974 PVC Consumption by End-Use Category

	Millions of Kilograms	% of Total
Apparel	104	5
Building and Construction	851	39
Home Furnishings	223	10
Recreation	130	6
Electrical	161	7
Packaging	147	7
Transportation	116	5
Miscellaneous	184	8
Exports	145	7
Other	119	5
	2,180	100

SOURCE: Modern Plastics, January 1975, p. 51.

Table 7-3

Possible PVC Substitutes

Market	PVC Resin Usage[1] Millions of Kilograms		Possible Substitutes[2]
	1973	1974	
Apparel			
Baby pants	12	12	Rubber
Footwear	66	63	Rubber
Outerwear	31	30	Other synthetic fibers
Building and construction			
Extruded foam moldings	26	22	Wood
Flooring	202	156	Wood
Lighting	5	6	Glass, styrene
Panels and siding	39	44	Wood, polyester
Pipe and conduit	520	505	Steel, ABS, polyethelene
Pipe fittings	41	44	Steel, ABS, polyethelene
Rainwater systems	16	15	Wood, aluminum
Swimming pool liners	18	19	Rubber
Westherstripping	16	16	Rubber, urethane
Window, other profiles	26	24	Wood,steel, aluminum
Electrical			
Wire and cable	188	161	Rubber, polyethylene
Home Furnishing			
Appliances	20	21	Other plastics in some applications
Furniture	145	144	Wood, melamine
Garden Hose	18	17	Rubber, nylon
Housewares	51	N.A.	Styrene, rubber
Wall coverings & wood surfacing film	54	58	Paper, melamine
Packaging			
Blow molded bottles	39	34	Glass, cans
Closure liners and gaskets	9	10	Rubber
Coatings	9	9	None
Film	59	57	Acrylics, styrene
Sheet	35	37	Polyethylene, nylon polyester
Recreation			
Records	66	65	None
Sporting goods	25	28	Rubber, leather
Toys	38	37	None
Transportation			
Auto mats	18	19	Rubber
Auto tops	15	13	Steel
Upholstery and seat covers	83	84	Nylon, polyesters

Table 7-3 (Con't)

Possible PVC Substitutes

Market	PVC Resin Usage Millions of Kilograms		Possible Substitutes[2]
Miscellaneous			
Agriculture (including pipe)	66	72	Aluminum, polyethylene
Credit cards	8	10	None
Laminates	23	24	None
Medical tubing	23	23	None
Novelties	7	8	None
Stationery supplies	18	20	Polyester
Tools and hardware	8	10	None
Export	66	145	None
Other	42	119	None
TOTAL	2,180	2,151	

SOURCES: 1) Modern Plastics, January 1974, p. 51

2) Discussions with industry representatives.

Table 7-4

Announced PVC Capacity Expansions and Closures

Company	Location	Capacity Increase (Millions of Kilograms)
Expansions to Existing Facilities:		
Borden	Illiopolis, Illinois	90
Diamond Shamrock	Deer Park, Texas	90
Goodyear	Plaquemine, Louisiana	45
Stauffer	Delaware City, Delaware	5
Air Products	Calvert City, Kentucky	115
B. F. Goodrich	Louisville, Kentucky	N.A.
TOTAL EXPANSIONS		345
New Facilities		
Certain-teed	Lake Charles, Louisiana	135
Rico Chemicals	Guayanilla, Puerto Rico	70
TOTAL NEW FACILITIES		205
Closures		
Monsanto	Springfield, Massachusetts	30
NET CAPACITY ADDITIONS (Expansions Plus New Facilities Less Closures)		520

SOURCES: Chemical Marketing Reporter, Schnell Publishing Co., May 20, 1974, page 9 and page 18, non-confidential data supplied by industry under Section 114 of the Clean Air Act; and Chemical Engineering, September 30, 1974, page 112.

Table 7-5

Prices of Ethylene Dichloride, Vinyl Chloride and Polyvinyl Chloride

Product	1974 May 13	1974 July 8	1974 October 21	1975 June 23
Ethylene Dichloride	9¢/lb	9.5¢/lb	9.5¢/lb	11-12¢/lb
Vinyl Chloride	7-10¢/lb	7-10¢/lb	9-12¢/lb	9-12¢/lb
Polyvinyl Chloride				
Homopolymer				
Suspension	17-22.5¢/lb	20-24¢/lb	22-25¢/lb	24-28¢/lb
Dispersion	30¢/lb	30-33¢/lb	32-34¢/lb	34-37¢/lb
Copolymer				
Suspension	19-24.5¢/lb	20-26¢/lb	24-26¢/lb	24-26¢/lb

SOURCE: Chemical Marketing Reporter, Schnell Publishing Company, various issues.

TABLE 7-6. SUMMARY OF ALGORITHMS USED FOR COMPUTING MODEL PLANT COSTS AND CREDITS[a,b]

Control Method	Process Point(s) Controlled	Expected Life (Years)	Installed Capital Cost Algorithm	Direct Operating Cost Algorithm	Annualized Capital Charge Algorithm[c]	Total Annualized Cost Algorithm
1. Fugitive						
a. Multi-Point Vinyl Chloride Detector	Fugitive emissions at VCM & PVC plants	14	C=$60,000 (constant) for all VCM plants; $150,000 (constant) for all PVC plants	OC=$26,400 (constant) for all VCM plants; $66,000 (constant) for all PVC plants	ACC=0.1608C	TAC=OC+0.1608C
b. Portable Hydrocarbon Detector	Fugitive emissions at VCM & PVC plants	10	C=$7,000 (constant) for all VCM & PVC plants	OC=$25,700 (constant) for all VCM & PVC plants	ACC=0.1878C	TAC=OC+0.1878C
c. Sample Flask Control System	Fugitive emissions at VCM & PVC plants	12	C=$150,000 (constant) for all VCM plants (cost for six systems) $25,000 (constant) for all PVC plants	OC=$63,000 (constant) for all VCM plants (cost for six systems) $10,500 (constant) for all PVC plants	ACC=0.1718C	TAC=OC+0.1718C
d. Transfer Operation Controls	Fugitive emissions at VCM & PVC plants	12	C=$60,000 (constant) for all VCM and PVC plants	OC=$161,700 (constant) for all VCM and PVC plants	ACC=0.1718C	TAC=OC+0.1718C
e. Rupture Discs	Fugitive emissions at VCM & PVC plants	10	C=$353P+$5,890 (for PVC plants)	OC=0.15C	ACC=0.1878C	TAC=OC+0.1878C
			C=$82,000 (for all VCM plants)	OC=$12,400 (for all VCM plants)		
f. Dual Mechanical Seals (on Pumps, Compressors, and Agitators)	Fugitive emissions in VCM & PVC plants	20	C=$91,000 (constant) for all VCM plants	OC=$31,700 (constant) for all VCM plants	ACC=0.1425C	TAC=OC+0.1425C
			C=$2,150P+$46,500 (for PVC plants)	OC=$277P+$16,200 (for PVC plants)	ACC=0.1425C	TAC=OC+0.1425C

TABLE 7-6 (continued). SUMMARY OF ALGORITHMS USED FOR COMPUTING MODEL PLANT COSTS AND CREDITS[a,b]

Control Method	Process Point(s) Controlled	Expected Life (Years)	Installed Capital Cost Algorithm	Direct Operating Cost Algorithm	Annualized Capital Charge Algorithm[c]	Total Annualized Cost Algorithm
g. Collection Header System	Fugitive emissions at VCM & PVC plants	12	C=\$84,200 (for all PVC and VCM plants)	OC=\$31,400 (for all PVC and VCM plants)	ACC=0.1718C	TAC=OC+0.1718C
h. Water Stripping	Inprocess waste water streams from PVC plants	20	$C=\$2,700P^{0.59}$ (Susp., Disp.-Partial)	OC=\$6,240+\$0.05C+ \$304P (Susp., Disp.-Partial)	ACC=0.1425C	TAC=OC+0.1425C
			$C=\$10,880P^{0.56}$ (Susp., Disp.-Total)	OC=\$6,240+\$0.05C+ \$3,910P (Susp., Disp.-Total)		
			$C=\$1,110P^{0.58}$ (Bulk)	OC=\$6,240+\$0.05C+\$32P (Bulk)		
i. Monomer Recovery Credit Attributable to Fugitive Control Methods				OC=(\$109.3P)[d] (VCM plants)		
				OC=(\$1,350P)[d] (Susp. PVC plants)		
				OC=(\$1,020P)[d] (Disp. PVC plants)		
				OC=(\$432P)[d] (Bulk PVC plants)		
2. Improved Reactor Instrumentation	Relief valve discharge on PVC reactors	10	C=\$2,400P	OC=\$240P	ACC=0.1878C	TAC=OC+0.1878C
3. Automatic Short-Stopping	Relief valve discharge on PVC reactors	10	C=\$3,000N	OC=\$150N	ACC=0.1878C	TAC=OC+0.1878C
4. New Slurry Blend Tanks	Slurry blend tanks in PVC plants	10	C=\$280,000N	OC=0	ACC=0.1878C	TAC=OC+0.1878C
5.a. Gasholder	Reactor opening and relief valve discharge in PVC plants	20	$C=\$2,510V_R^{0.73}$	$OC=\$10.6V_R$	ACC=0.1425C	TAC=OC+0.1425C

TABLE 7-6 (continued). SUMMARY OF ALGORITHMS USED FOR COMPUTING MODEL PLANT COSTS AND CREDITS[a,b]

Control Method	Process Point(s) Controlled	Expected Life (Years)	Installed Capital Cost Algorithm	Direct Operating Cost Algorithm	Annualized Capital Charge Algorithm[c]	Total Annualized Cost Algorithm
b. Reactor Water Purge System	Reactor opening and relief valve discharge in PVC plants		$C=\$219[NV_R]^{0.6}$	$OC=\$3,120+\$0.06C+\$0.104[NV_R]$		
6. Improved Stripping	Slurry blend tanks, spray or rotary dryers, and bulk storage and transfer operations in PVC plants	20	$C=\$101,600P^{0.53}$ (Susp. plants)	$OC=\$52,600+\$0.19C+\$1,450P$ (Susp. plants)	ACC=0.1425C	TAC=OC+0.1425C
			$C=\$177,800P^{0.53}$ (Disp. plants)	$OC=\$52,600+\$0.19C+\$11,400P$ (Disp. plants)		
			$C=\$5,090P^{0.53}$ (Bulk plants)	$OC=\$5,000P$ (Bulk plants)		
7. Carbon Adsorption	Monomer recovery system in dispersion and suspension PVC plants	10	C=$333,000(constant) for all PVC plants	$20,300(constant) for all PVC plants	ACC-0.1878C	TAC=OC+0.1878C
8. Incineration	EDC purification and VCM formation and purification, (only) in VCM plants	10	C=$355,000(constant) for all VCM plants	OC=$81,000+$398P	ACC=0.1878C	TAC=OC+0.1878C
	EDC purification, VCM formation and purification, and oxychlorination process in VCM plants	10	$C=\$524,300V_{in}^{0.53}$	$OC=\$63,200+\$0.05C+\$443P+\$49,300V_{in}$	ACC=0.1878C	TAC=OC+0.1878C
	Slurry blend tanks, centrifuge, monomer recovery system, dryer and bulk storage and transfer operations in suspension PVC plants	10	$C=\$101,100P^{06}$ (for $22<P<40$)	$OC=\$87,310P^{0.74}$	ACC=0.1878C	TAC=OC+0.1878C
			$C=\$33,700P^{0.9}$ (for $P\geq 40$)			

TABLE 7-6 (continued). SUMMARY OF ALGORITHMS USED FOR COMPUTING MODEL PLANT COSTS AND CREDITS[a,b]

Control Methods	Process Point (s) Controlled	Expected Life (Years)	Installed Capital Cost Algorithm	Direct Operating Cost Algorithm	Annualized Capital Charge Algorithm[c]	Total Annualized Cost Algorithm
	Slurry blend tanks, monomer recovery system, spray dryer, and bulk storage and transfer operations in dispersion PVC plants	10	$C=\$265,600P^{0.6}$ (for $4.5<P<7.9$) $C=\$142,400P^{0.9}$ (for $P\geq 7.9$MM lb/yr)	$OC=\$285,100P^{0.74}$	ACC=0.1878C	TAC=OC+0.1878C
	Monomer recovery system and product transfer operations in bulk plants	10	$C=\$107,200P^{0.4}$ ($38\leq P<92$) $C=\$43,500P^{0.6}$ ($92\leq P<162$) $C=\$9,390P^{0.9}$ $P\geq 162$	$OC=\$30,600P^{0.74}$	ACC=0.1878C	TAC=OC+0.1878C
9. Monomer Recovery Credit Attributable to Non-Fugitive Control Methods:				OC=($2,378P) (Susp. PVC plants) OC=($2,122P) (Disp. PVC plants) OC=($1,879P) (Bulk PVC plants)		

TABLE 7-6 (continued). SUMMARY OF ALGORITHMS USED FOR COMPUTING MODEL PLANT COSTS AND CREDITS[a,b]

[a]Refer to nomenclature for item(s) represented by symbol(s).
[b]All costs are expressed in 1st quarter 1975 dollars.
[c]Annualized capital charge is computed by multiplying sum of capital recovery factor (CRF) and administrative charge (0.025) by installed capital cost (C).
[d]Parentheses indicate that value is a credit, rather than a cost.

Nomenclature

C = installed capital cost
OC = direct operating cost
P = VCM or PVC production rate in 10^6 lb/yr
ACC = annualized capital charge
TAC = total annualized cost or simply "annual cost"
V_R = volume of PVC reactor in gallons
N = number of reactor lines;

N=1 for production rates up to 50 $\times 10^6$ lb/yr (inclusive)

N=2 for production rates above 50 $\times 10^6$ lb/yr and up to (but not including) 100$\times 10^6$ lb/yr

N=3 for production rates equal to or greater than 100$\times 10^6$ lb/yr

V_{in} = incinerator inlet volumetric flowrate in thousand SCFM.

TABLE 7-7. CONTROL COSTS[1] FOR MODEL BALANCED EDC-VCM PLANT (318 MILLION kg/yr = 700 MILLION lb/yr)

Process Emission Points	ALTERNATIVE I Control Techniques	ALTERNATIVE I Installed Capital Cost	ALTERNATIVE I Total Annualized Cost	ALTERNATIVE III[2] Control Techniques	ALTERNATIVE III[2] Installed Capital Cost	ALTERNATIVE III[2] Total Annualized Cost
1. Fugitive	(See Table 7-11)	$534	$366	(Same as Alt. I)	$534	$366
2. EDC Purification	Incineration	$355	$427	Incineration	$1,369	$1,291
3. VCM Formation and Purification	Incineration	(Incl. Above)	(Incl. Above)	Incineration	(Incl. Above)	(Incl. Above)
4. Oxychlorination	No Control	0	0	Incineration	(Incl. Above)	(Incl. Above)
TOTAL[3]		$889	$793		$1,903	$1,657
Annual Cost[4]			0.24¢/kg [0.11¢/lb]			0.53¢/kg [0.24¢/lb]
Percentage Emission Reduction (By Weight)		90			97	

[1]All costs in thousands of 1st quarter 1975 dollars
[2]Costs to meet the Alternative II control level have not been included here (see text for explanation)
[3]Totals are rounded to the nearest thousand dollars
[4]Based on production at 100 percent capacity

TABLE 7-8. CONTROL COSTS[1] FOR MODEL PVC SUSPENSION PLANTS (68 MILLION kg/yr = 150 MILLION lb/yr)

Process Emission Points	Control Techniques	CASE A Installed Capital Cost	Total Annualized Cost	Control Techniques	CASE B Installed Capital Cost	Total Annualized Cost
1. Fugitive	(See Table 7-12)	$806	$340	(See Table 7-12)	$933	$905
2. Relief Valve Discharge	Improved Reactor Instrumentation	$360	$104	(Same as Case A)	$360	$104
	Automated "Short-Stopping" of Reactions	$ 54	$ 13	(Same as Case A)	$ 54	$ 13
3. Relief Valve Discharge, Reactor Opening	Gasholder	$1,257	$232	(Same as Case A)	$1,257	$232
	Reactor Water Purge System	$206	$ 54		$206	$ 54
4. Slurry Blend Tank and Centrifuge	(Incl. with Dryer)	--	--	New Slurry Blend Tanks[2]	$840	$158
5. Monomer Recovery System	Carbon Adsorption	$333	$ 83	Incineration	$3,064	$4,134
6. Dryer	Improved Stripping Operation	$1,446	$753	Incineration	(Incl. Above)	(Incl. Above)
7. Bulk Storage and Transfer	Improved Stripping Operation	(Incl. Above)	(Incl. Above)	Incineration	(Incl. Above)	(Incl. Above)
Credit for Recovered Monomer[3]		--	($357)[4]		--	($103)[4]
Total[5]		$4,462	$1,222		$6,714	$5,497
Annual Cost[6]			1.8¢/kg [0.81¢/lb]			8.1¢/kg [3.7¢/lb]
Overall Control Efficiency (Percent by Weight)		95			95	

TABLE 7-8 (continued). CONTROL COSTS[1] FOR MODEL PVC SUSPENSION PLANTS (68 MILLION kg/yr = 150 MILLION lb/yr)

[1]All costs in thousands of 1st quarter 1975 dollars.
[2]Slurry blend tank emissions are controlled by incineration, as are emission points 5, 6, and 7. Installation of new, higher pressure blend tanks is also necessary before the emissions can be vented to any add-on control device.
[3]Does not include monomer recovery credit attributable to most fugitive emission controls (see Table 7-12). Recovery credit for all fugitive controls except water stripping has been incorporated into the fugitive total annualized cost.
[4]Parentheses indicate number is a credit, rather than a cost.
[5]Totals are rounded to the nearest thousand dollars.
[6]Based on production at 100 percent capacity.

TABLE 7-9. CONTROL COSTS[1] FOR MODEL PVC DISPERSION PLANTS (14 MILLION kg/yr = 30 MILLION lb/yr)

Process Emission Points	ALTERNATIVE I[2] Control Techniques	Installed Capital Cost	Total Annualized Cost	ALTERNATIVE II, CASE A[3] Control Techniques	Installed Capital Cost	Total Annualized Cost	ALTERNATIVE II, CASE B[4,5] Control Techniques	Installed Capital Cost	Total Annualized Cost
1. Fugitive	(See Table 7-13)	$535	$505	(See Table 7-13)	$481	$387	(See Table 7-13)	$535	$505
2. Relief Valve Discharge	Improved Reactor Instrumentation	$ 80	$ 23	(Same as Alt. I)	$ 80	$ 23	(Same as Alt. I)	$ 80	$ 23
	Automated "Short-Stopping" of Reactions	$ 12	$ 3	(Same as Alt. I)	$ 12	$ 3	(Same as Alt. I)	$ 12	$ 3
3. Relief Valve Discharge, Reactor Opening	Gasholder	$1,257	$232	(Same as Alt. I)	$1,257	$232	(Same as Alt. I)	$1,257	$232
	Reactor Water Purge System	$ 78	$ 21	(Same as Alt. I)	$ 78	$ 21	(Same as Alt. I)	$ 78	$ 21
4. Slurry Blend Tank	None	--	--	(Incl. With Dryer)	--	--	New Slurry Blend Tanks[6]	$280	$ 53
5. Monomer Recovery System	Carbon Adsorption	$333	$ 83	(Same as Alt. I)	$333	$ 83	Incineration	$3,045	$4,104
6. Spray Dryer	None	--	--	Improved Slurry Stripping Operation	$1,078	$754	Incineration	(Incl. Above)	(Incl. Above)
7. Bulk Storage and Transfer	None	--	--	Improved Slurry Stripping Operation	(Incl. Above)	(Incl. Above)	Incineration	(Incl. Above)	(Incl. Above)
Credit for Recovered Monomer[7]		--	($ 64)[8]		--	($140)[8]		--	($ 49)[8]
TOTAL[9]		$2,295	$803		$3,319	$1,363		$5,287	$4,892
Annual Cost[10]		5.9¢/kg [2.7¢/lb]			9.9¢/kg [4.5¢/lb]			35.9¢/kg [16.3¢/lb]	
Overall Control Efficiency (Percent by Weight)		52			96			96	

TABLE 7-9 (continued). CONTROL COSTS[1] FOR MODEL PVC DISPERSION PLANTS (14 MILLION kg/yr = 30 MILLION lb/yr)

[1]All costs in thousands of 1st quarter 1975 dollars.
[2]Corresponds to Alternative I in Chapter 5 (stripping to approximately 30,000 PPM).
[3]Corresponds to Alternative II in Chapter 5 (stripping to 2000 PPM).
[4]Corresponds to Alternative II in Chapter 5 if incineration must be used.
[5]Costs for meeting Alternative III control levels (stripping to 400 PPM) are not included in this table, because no such information is presently available (see text).
[6]Slurry blend tank emissions are controlled by incineration, as are emission points 5, 6, and 7. Installation of new, higher pressure blend tanks is also necessary before the emissions can be vented to any add-on control devices.
[7]Does not include monomer recovery credit attributable to fugitive emission controls (see Table 7-13). Recovery credit for all fugitive controls, except water stripping, has been incorporated into the fugitive total annualized cost.
[9]Totals are rounded to the nearest thousand dollars.
[10]Based on production at 100 percent capacity.

TABLE 7-10. CONTROL COSTS[1] FOR MODEL PVC BULK PLANTS (45 MILLION kg/yr = 100 MILLION lb/yr)

Process Emission Points	Control Techniques	CASE A Installed Capital Cost	Total Annualized Cost	Control Techniques	CASE B Installed Capital Cost	Total Annualized Cost
1. Fugitive	(See Table 7-14)	$645	$414	(Same as Case A)	$645	$414
2. Relief Valve Discharge	Improved Reactor Instrumentation	$240	$ 69	(Same as Case A)	$240	$ 69
	Automated "Short-Stopping" of Reactions	$ 36	$ 9	(Same as Case A)	$ 36	$ 9
3. Monomer Recovery System	Carbon Adsorption	$333	$ 83	Incineration	$685	$1,053
4. Product Transfer	Improved Stripping	$ 58	$508	Incineration	(Incl. Above)	(Incl. Above)
Credit for Recovered Monomer[2]		--	($188)[3]		--	($ 19)[3]
Total[4]		$1,312	$895		$1,606	$1,526
Annual Cost[5]			2.0¢/kg [0.90¢/lb]			3.4¢/kg [1.5¢/lb]
Overall Control Efficiency (Percent by Weight)			96			96

[1]All costs in thousands of 1st quarter 1975 dollars.
[2]Does not include monomer recovery credit attributable to most fugitive emission controls (see Table 7-14). Recovery credit for all fugitive controls, except water stripping, has been incorporated into the fugitive total annualized cost.
[3]Parentheses indicate number is a credit, rather than a cost.
[4]Totals are rounded to the nearest thousand dollars.
[5]Based on production at 100 percent capacity.

Table 7-11. Summary of Fugitive Emission Control Costs for Balanced Ethylene Dichloride-Vinyl Chloride Model Plant (Production Rate = 318 Million kg/yr = 700 Million lb/yr)

Control Measure	Installed Cost[a]	Annual Direct Operating Cost	Annualized Capital Charges[b]	Total Annualized Cost[c]
1. Multi-Point Vinyl Chloride Detector	$60,000	$26,400	$ 9,600	$36,000
2. Portable Hydrocarbon Detector	6,700	25,700	1,300	27,000
3. Sample Flask Control Systems	150,000	63,000	25,800	88,800
4. Transfer Operation Controls	60,000	161,700	10,300	172,000
5. Collection Header System[d]	84,200	31,400	14,500	45,900
6. Rupture Discs	82,500	12,400	15,500	27,900
7. Dual Mechanical Seals (on Pumps & Compressors)	91,000	31,700	13,000	44,700
Monomer Recovery Credit (Items 1 through 7)	---	(76,500)[e,f]	---	(76,500)[e,f]
TOTALS (Rounded to nearest thousand $)	$534,000	$276,000	$90,000	$366,000

(Table 7-11 continued)

[a]All costs computed as of 1st quarter 1975.
[b]Includes: depreciation, interest, and administrative charges (taxes, insurance, overhead).
[c]The "total annualized cost" equals the sum of "annual direct operating cost" and "annualized capital charges".
[d]Consists of piping necessary to connect equipment undergoing maintenance or inspection to either the monomer recovery system or to an add-on control device.
[e]Parentheses indicate a credit, not a cost.
[f]By definition, control measures 1 through 7, taken together, reduce all fugitive emissions by 90%, or total plant emission by 24%. This results in a recovery credit of 0.1093 kg VCM/100 kg product in VCM model plant.

Table 7-12. Summary of Fugitive Emission Control Costs for Suspension Polyvinyl Chloride Model Plant (Production Rate = 68 Million kg/yr = 150 Million lb/yr)[1]

Control Measure	Installed Cost[a]	Annual Direct Operating Cost	Annualized Capital Charges[b]	Total Annualized Cost[c]
1. Multi-Point Vinyl Chloride Detector	$150,000	$66,000	$24,100	$90,100
2. Portable Hydrocarbon Detector	6,700	25,700	1,300	27,000
3. Sample Flask Control Systems	25,000	10,500	4,300	14,800
4. Transfer Operation Controls	60,000	161,700	10,300	172,000
5. Collection Header System[d]	84,200	31,400	14,500	45,900
6. Rupture Discs	58,900	8,800	11,100	19,900
7. Dual Mechanical Seals (on Pumps, Compressors, and Agitators)	369,100	57,800	52,600	110,400
Monomer Recovery Credit (Items 1 through 7)	---	(202,500)[e,2]	---	(202,500)[2]
8. Water Stripping (Partial)[3]	51,700	54,500	7,400	61,900
CASE A TOTALS (Rounded to nearest thousand $)	$806,000	$214,000	$126,000	$340,000
8A. Water Stripping (Total Plant)[4]	179,400	601,200	25,700	626,900
CASE B TOTALS[5] (Rounded to nearest thousand $)	$933,000	$761,000	$144,000	$905,000

(Table 7-12 continued)

[1]See Table 7-11 for all alphabetical footnotes.
[2]By definition, control measures 1 through 7, taken together, reduce all fugitive emissions by 90%, or total plant emissions by 34%. This results in a recovery credit of 1.35 kg VCM/100 kg product in the suspension model plant. The credits attributable to water stripping have been incorporated into the credit listed in Table 7-8.
[3]This pertains to stripping of water streams from: recycle tanks, pump seals, and reactor water purge system.
[4]This pertains to stripping of all water streams included in item 8 plus all other water streams in the plant.
[5]Case B total costs are the sum of costs for items 1 through 7 plus item 8A.

Table 7-13. Summary of Fugitive Emission Control Costs for Dispersion

Polyvinyl Chloride Model Plant (Production Capacity = 14 Million kg/yr = 30 Million lb/yr)[1]

Control Measure	Installed Cost[a]	Annual Direct Operating Cost	Annualized Capital Charges[b]	Total Annualized Cost[c]
1. Multi-Point Vinyl Chloride Detector	$150,000	$66,000	$24,100	$90,100
2. Portable Hydro-carbon Detector	6,700	25,700	1,300	27,000
3. Sample Flask Control Systems	25,000	10,500	4,300	14,800
4. Transfer Operation Controls	60,000	161,700	10,300	172,000
5. Collection Header System[d]	84,200	31,400	14,500	45,900
6. Rupture Discs	17,700	2,700	3,300	6,000
7. Dual Mechanical Seals (on Pumps, Compressors, and Agitators)	118,200	25,400	16,800	42,200
Monomer Recovery Credit (Items 1 through 7)	---	(30,600)[e,2]	---	(30,600)[e,2]
8. Water Stripping (Partial)[3]	19,500	16,400	2,900	19,300
ALTERNATIVE II, CASE A TOTALS (rounded to nearest thousand $)	$481,000	$309,000	$78,000	$387,000
8A. Water Stripping[4] (Total Plant)	72,800	127,300	10,400	137,700
ALTERNATIVE I AND ALTERNATIVE II, CASE B TOTALS[5]	$535,000	$420,000	$85,000	$505,000

(Table 7-13 continued)

[1]See Table 7-11 for all alphabetical footnotes.
[2]By definition, control measures 1 through 7, taken together, reduce all fugitive emissions by 90%, or total plant emissions by 17%. This results in a recovery credit of 1.02 kg VCM/100 kg product in the dispersion model plant. The credits attributable to water stripping have been incorporated into the credit listed in Table 7-9.
[3]This pertains to stripping of water streams from: recycle tanks, pump seals, and the reactor water purge system.
[4]This pertains to stripping of all water streams included in item 8 plus all other water streams in the plant.
[5]Alternative I and Alternative II, Case B total costs are the sum of costs for items 1 through 7 plus item 8A. Since Alternative I includes neither "improved slurry stripping" nor "incineration" controls, it is assumed that all water streams in the plant would need to be stripped.

Table 7-14. Summary of Fugitive Emission Control Costs for Bulk Polyvinyl Chloride Model Plant (Production Capacity = 45 Million kb/yr = 100 Million lb/yr)[1]

Control Measure	Installed Cost[a]	Annual Direct Operating Cost	Annualized Capital Charges[b]	Total Annualized Cost[c]
1. Multi-Point Vinyl Chloride Detector	$150,000	$66,000	$24,100	$90,100
2. Portable Hydro-carbon Detector	6,700	25,700	1,300	27,000
3. Sample Flask Control Systems	25,000	10,500	4,300	14,800
4. Transfer Operation Controls	60,000	161,700	10,300	172,000
5. Collection Header System[d]	84,200	31,400	14,500	45,900
6. Rupture Discs	41,200	6,200	7,700	13,900
7. Dual Mechanical Seals (on Pumps, Compressors and Agitators)	61,500	43,900	37,300	81,200
8. Water Stripping[3]	15,900	10,300	2,300	12,600
Monomer Recovery Credit (Items 1 through 7)	---	(43,200)[e,2]	---	(43,200)[e,2]
TOTALS (rounded to nearest thousand $)	$645,000	$312,000	$102,000	$414,000

(Table 7-14 continued)

[1]See Table 7-11 for all alphabetical footnotes.
[2]By definition, control measures 1 through 7, taken together, reduce all fugitive emissions by 90%, or total plant emissions by 18%. This results in a recovery credit of 0.432 kg VCM/100 kg product in the bulk PVC model plant. The credit attributable to water stripping has been incorporated into the credit listed in Table 7-10.
[3]This pertains to stripping of pump seal water, only.

Table 7-15. Cost-Effectiveness of Alternative Vinyl Chloride Control Methods

Emission Source	Total Captured Emissions (Thousand lb/yr)	Total Annualized Cost[1] (Thousand $/yr)	CE Ratio[2] (¢/lb VCM) Removed)	CE Rank[3]	Relationship to Most Cost Effective Option[4]
Model EDC-VCM Plant					
1. Fugitive	765	366	0.48	6	24:1
2. EDC Finishing, VCM Finishing and Purification	2030	407	0.21	3	11:1
3. Oxychlorination Process	0	0	N.A.	N.A.	N.A.
Total Alternative I (EDC-VCM)	2795	793	0.28	N.A.	N.A.
1. Fugitive	765	366	0.48	6	24:1
2. EDC Finishing, VCM Finishing and Purification	2030	427	0.21	3	11:1
3. Oxychlorination Process	237	864	3.65	9	183:1
Total Alternative III (EDC-VCM)	3032	1657	0.55	N.A.	N.A.
Model PVC Plant (Suspension)					
1. Fugitive (Excl. Water Stripping)	2025	278	0.14	2	7:1
2. Relief Valve Discharge, Reactor Opening	989	306	0.31	4	16:1
3. Monomer Recovery System	718	11	0.02	1	1:1
4. Slurry Tank, Centrifuge, Dryer, Bulk Storage and Transfer	1815	572	0.32	5	16:1
5. Water Stripping	69	55	0.80	7	40:1
Total Case A (PVC)	5616	1222	0.22	4	11:1

(Table 7-15 continued)

Emission Source	Total Captured Emissions (Thousand lb/yr)	Total Annualized Cost[1] (Thousand $/yr)	CE Ratio[2] (¢/lb VCM removed)	CE Rank[3]	Relationship Most Cost Effective Option[4]
1. Fugitive (Excl. Water Stripping)	2025	278	0.14	2	7:1
2. Relief Valve Discharge, Reactor Opening	989	306	0.31	4	16:1
3. Monomer Recovery System	2550	4292	1.68	8	84:1
4. Slurry Tank, Centrifuge, Dryer, Bulk Storage and Transfer	(Incl. Above)	(Incl. Above)	(Incl. Above)	(Incl. Above)	(Incl. Above)
5. Water Stripping	81	621	7.64	10	382:1
Total Case B (PVC)	5645	5497	0.97	11	49:1

[1] Includes recovery credits.
[2] Total annualized cost divided by controlled emissions.
[3] 1 equals most effective.
[4] CE ratio of option divided by CE ratio of most effective option.

Table 7-16. EPA Water Effluent Regulations - Compliance Costs for EDC, VCM, and PVC Plants to Meet the 1983 (Best Available Technology) Requirements*

1. Calculation of cost pass-through from EDC plants to VCM plants:

A.	Capital required to meet BAT	$661,618
B.	15% before-tax profit (15%xA)	99,243
C.	Annualized cost to meet BAT	132,312
D.	Total annual recovery (B+C)	231,555
E.	Model plant capacity (lb/yr EDC)	684,000,000
F.	Unit cost pass-through (D ÷ E)	0.034¢/lb EDC

2. Calculation of costs incurred at VCM plants:

A.	Capital required to meet BAT	$1,179,753
B.	Annualized costs to meet BAT	235,929
C.	EDC cost pass-through (1.58#EDC/#VCM)	188,020
D.	Total annual cost to meet BAT (B+C)	433,949
E.	Model plant capacity (lb VCM/yr)	350,000,000
F.	Unit cost (D ÷ E)	0.12¢/lb VCM
G.	Unit capital requirement (A ÷ E)	0.34¢/lb VCM/yr

3. Calculation of costs incurred at PVC plants:

A.	Capital required to meet BAT	$1,262,086
B.	Annualized costs to meet BAT	272,331
C.	Model plant capacity (lb PVC/yr)	150,000,000
D.	Unit cost (B ÷ C)	0.18¢/lb PVC
E.	Unit capital requirement (A ÷ C)	0.84¢/lb PVC/yr

SOURCE: Control costs developed from material supplied by EPA's Effluent Guidelines Division.

*1983 BAT requirements are identical to New Source Effluent Standards.

Table 7-17. Existing EDC Plants - Capital Summary

Alternative I or Alternative II

Plant Owner/Location	Capacity (Million lb/yr)	Estimated Capital Requirement: Air[1] $(000)	Water[2] $(000)	Total $(000)	¢/lb/yr
Allied Chemical/Baton Rouge	650	$355	$629	$984	0.15
B. F. Goodrich/Calvert City	1000	355	967	1322	0.13
Continental Oil/Lake Charles	1000	355	967	1322	0.13
Diamond Shamrock/Deer Park	260	355	251	606	0.23
Dow Chemical/Freeport	1300	355	1257	1612	0.12
Dow Chemical/Oyster Creek	1100	355	1064	1419	0.13
Dow Chemical/Plaquemine	1160	355	1122	1477	0.13
Ethyl Corp./Baton Rouge	550	355	532	887	0.16
Ethyl Corp./Houston	260	355	251	606	0.23
PPG/Guayanilla	835	355	808	1163	0.14
PPG/Lake Charles	1000	355	967	1322	0.13
Shell/Deer Park	1200	355	1161	1516	0.13
Shell/Norco	1165	355	1127	1482	0.13
Union Carbide/Taft	150	0[3]	145	145	0.10
Union Carbide/Texas City	150	0[3]	145	145	0.10
Vulcan/Geismar	240	355	232	587	0.24
	12,320	$5,120	$11,915	$17,035	0.14

[1] Includes only incineration of the EDC purification process emission point. Costs derived from Table 7-6 except for Stauffer Chemical/Long Beach for which actual costs were available.
[2] Effluent costs based on data presented in Table 7-16.
[3] Assumed to require no air emission controls.

Table 7-18. Existing EDC Plants - Annualized Cost Summary

Alternative I or Alternative II

Plant Owner/Location	Capacity (Million lb/yr)	Annualized Costs Air[1] $(000)/yr	Annualized Costs Water[2] $(000)/yr	Total Annualized Costs $(000)/yr	Total Annualized Costs ¢/lb @ Capacity
Allied Chemical/Baton Rouge	650	$283	$126	$409	0.06
B. F. Goodrich/Calvert City	1000	546	193	739	0.07
Continental Oil/Lake Charles	1000	438	193	631	0.06
Diamond Shamrock/Deer Park	260	285	50	335	0.13
Dow Chemical/Freeport	1300	220	251	471	0.04
Dow Chemical/Oyster Creek	1100	427	213	640	0.06
Dow Chemical/Plaquemine	1160	283	224	507	0.04
Ethyl Corp./Baton Rouge	550	255	106	361	0.07
Ethyl Corp./Houston	260	208	50	258	0.10
PPG/Guayanilla	835	347	162	509	0.06
PPG/Lake Charles	1000	267	193	460	0.05
Shell/Deer Park	1200	506	232	738	0.06
Shell/Norco	1165	427	225	652	0.06
Stauffer/Long Beach	300	177	58	235	0.08
Union Carbide/Taft	150	0[3]	29	29	0.02
Union Carbide/Texas City	150	0[3]	29	29	0.02
Vulcan/Geismar	240	274	46	320	0.13
	12,320	$4,943	$2,380	$7,323	0.06

[1] Includes only incineration of the EDC purification process emission point. Costs derived from Table 7-6 except for Stauffer Chemical/Long Beach for which actual costs were available.
[2] Effluent costs based on data presented in Table 7-16.
[3] Assumed to require no air emission controls.

Table 7-19. Existing EDC Plant Profitability

Calculations and Assumptions (Before Control)

Parameter	New VCM Plant[1]	Existing EDC Plant	Explanation
Plant Size (Million lb/yr)	700	1300	
Plant Investment (¢/lb/yr)	4.03	3.35	- Scale at 0.7 Exponent
Working Capital (¢/lb/yr)	0.80	0.67	- Ratio to Plant Investment
Total Investment (¢/lb/yr)	4.83	4.02	
Average Sales Price	12.00 ¢/lb	12.00	- Assume Constant
Cost of Sales (Excl. Depr., SG&A)	10.65	10.65	- Assume Constant
Depreciation	0.40	0.33	- Ratio to Total Investment
SG&A	0.30	0.25	- Ratio to Total Investment
Total Cost	11.35	11.23	
Profit Before Tax	0.65	0.77	
Profit After Tax	0.325	0.385	
Return on Investment	6.7%	9.6%	

[1]From Table 7-33.

Table 7-20. Existing EDC Plants - Profitability[1] Summary

Alternative I or Alternative II

Plant Owner/Location	Before Control	After Control, No Price Increase	After Control, Price Increase[2]	Relative Change in ROI[3]
Allied Chemical/Baton Rouge	6.4%	5.6%	6.4%	0
B. F. Goodrich/Calvert City	8.3	7.3	8.2	(1%)[4]
Continental Oil/Lake Charles	8.3	7.4	8.3	0
Diamond Shamrock/Deer Park	3.2	2.1	2.7	(16)
Dow Chemical/Freeport	9.6	8.8	9.8	2
Dow Chemical/Oyster Creek	8.8	7.8	8.7	(1)
Dow Chemical/Plaquemine	9.0	8.3	9.2	2
Ethyl Corp./Baton Rouge	5.8	5.0	5.7	(2)
Ethyl Corp./Houston	3.2	2.3	2.9	(9)
PPG/Guayanilla	7.5	6.7	7.5	0
PPG/Lake Charles	8.3	7.5	8.4	1
Shell/Deer Park	9.1	8.1	9.1	0
Shell/Norco	9.0	8.1	9.0	0
Stauffer/Long Beach	3.5	2.8	3.4	(3)
Union Carbide/Taft	1.5	1.4	1.9	27
Union Carbide/Texas City	1.5	1.4	1.9	27
Vulcan/Geismar	2.9	1.8	2.4	(17)

[1] Profit after tax ÷ investment (estimated).
[2] Price increase assumed to be sufficient to recover total annualized costs plus a 15% pre-tax return on total capital. Calculation (refer to Tables 7-17 and 7-18 for cost details):

$$\text{Price Increase} = \frac{0.15\ (\$17{,}035{,}000) + \$7{,}323{,}000}{12{,}320{,}000{,}000}$$

$$= 0.08¢/\text{lb EDC}$$

[3] ROI after control (with price increase) relative to ROI before control.
[4] ( ) denotes decrease.

Table 7-21. Existing EDC Plants - Capital Summary

Alternative III

Plant Owner/Location	Capacity (Million lb/yr)	Estimated Capital Requirement: Air[1] $(000)	Water[2] $(000)	Total $(000)	¢/lb/yr
Allied Chemical/Baton Rouge	650	$355	$629	$984	0.15
B. F. Goodrich/Calvert City	1000	355	967	1322	0.13
Continental Oil/Lake Charles	1000	355	967	1322	0.13
Diamond Shamrock/Deer Park	260	1177	251	1428	0.55
Dow Chemical/Freeport	1300	355	1257	1612	0.12
Dow Chemical/Oyster Creek	1100	355	1064	1419	0.13
Dow Chemical/Plaquemine	1160	355	1122	1477	0.13
Ethyl Corp./Baton Rouge	550	355	532	887	0.16
Ethyl Corp./Houston	260	355	251	606	0.23
PPG/Guayanilla	835	355	808	1163	0.14
PPG/Lake Charles	1000	355	967	1322	0.13
Shell/Deer Park	1200	355	1161	1516	0.13
Shell/Norco	1165	355	1127	1482	0.13
Stauffer/Long Beach	300	150	290	440	0.15
Union Carbide/Taft	150	0[3]	145	145	0.10
Union Carbide/Texas City	150	0[3]	145	145	0.10
Vulcan/Geismar	240	355	232	587	0.24
	12,320	$6,605	$11,915	$18,520	0.15

[1] Includes only incineration of the EDC purification process emission point. Costs derived from Table 7-6 except for Stauffer Chemical/Long Beach for which actual costs were available.
[2] Effluent costs based on data presented in Table 7-16.
[3] Assumed to require no air emission controls.

Table 7-22. Existing EDC Plants - Annualized Cost Summary

Alternative III

Plant Owner/Location	Capacity (Million lb/yr)	Annualized Costs Air[1] $(000)/yr	Annualized Costs Water[2] $(000)/yr	Total Annualized Costs $(000)/yr	Total Annualized Costs ¢/lb @ Capacity
Allied Chemical/Baton Rouge	650	$283	$126	$409	0.06
B. F. Goodrich/Calvert City	1000	546	193	739	0.07
Continental Oil/Lake Charles	1000	438	193	631	0.06
Diamond Shamrock/Deer Park	260	772	50	772	0.30
Dow Chemical/Freeport	1300	220	251	471	0.04
Dow Chemical/Oyster Creek	1100	427	213	640	0.06
Dow Chemical/Plaquemine	1160	283	224	507	0.04
Ethyl Corp./Baton Rouge	550	255	106	361	0.07
Ethyl Corp./Houston	260	208	50	258	0.10
PPG/Guayanilla	835	347	162	509	0.06
PPG/Lake Charles	1000	267	193	460	0.05
Shell/Deer Park	1200	506	232	738	0.06
Shell/Norco	1165	427	225	652	0.06
Stauffer/Long Beach	300	177	58	235	0.08
Union Carbide/Taft	150	0[3]	29	29	0.02
Union Carbide/Texas City	150	0[3]	29	29	0.02
Vulcan/Geismar	240	618	46	664	0.28
	12,320	$5,724	$2,380	$8,104	0.07

[1] Includes only incineration of the EDC purification process emission point. Costs derived from Table 7-6 except for Stauffer Chemical/Long Beach for which actual costs were available.
[2] Effluent costs based on data presented in Table 7-16.
[3] Assumed to require no air emission controls.

Table 7-23. Existing EDC Plants - Profitability[1] Summary

Plant Owner/Location	Before Control	Alternative III: After Control, No Price Increase	Alternative III: After Control, Price Increase[2]	Alternative III: Relative Change in ROI[3]
Allied Chemical/Baton Rouge	6.4%	5.6%	6.4%	0
B. F. Goodrich/Calvert City	8.3	7.3	8.2	(1%)[4]
Continental Oil/Lake Charles	8.3	7.4	8.3	0
Diamond Shamrock/Deer Park	3.2	0.8	1.9	(59)
Dow Chemical/Freeport	9.6	8.8	9.8	2
Dow Chemical/Oyster Creek	8.8	7.8	8.7	(1)
Dow Chemical/Plaquemine	9.0	8.3	9.2	2
Ethyl Corp./Baton Rouge	5.8	5.0	5.7	(2)
Ethyl Corp./Houston	3.2	2.3	2.9	(9)
PPG/Guayanilla	7.5	6.7	7.5	0
PPG/Lake Charles	8.3	7.5	8.4	1
Shell/Deer Park	9.1	8.1	9.1	0
Shell/Norco	9.0	8.1	9.0	0
Stauffer/Long Beach	3.5	2.8	3.4	(3)
Union Carbide/Taft	1.5	1.4	1.9	27
Union Carbide/Texas City	1.5	1.4	1.9	27
Vulcan/Geismar	2.9	1.8	2.4	(17)

[1] Profit after tax ÷ investment (estimated).
[2] Since only two plants incur greater control costs at the Alternative III level than at the Alternative I/Alternative II level (Diamond Shamrock/Deer Park and Vulcan/Geismar), the price increase of 0.08¢/lb resulting from Alternative I/Alternative II was retained for this alternative.
[3] ROI after control (with price increase) relative to ROI before control.
[4] ( ) denotes decrease.

Table 7-24. Existing VCM Plants - Capital Summary

Alternative I

Plant Owner/Location	Capacity (Million lb/yr)	Estimated Capital Requirement: Air[1] $(000)	Water[2] $(000)	Total $(000)	¢/lb/yr
Allied/Geismar	340	$ 534	$1,146	$1,680	0.49
B. F. Goodrich/Calvert City	1,000	534	3,371	3,905	0.39
Continental Oil/Westlake	730	534	2,461	2,995	0.41
Dow Chemical/Freeport	180	534	607	1,141	0.63
Dow Chemical/Oyster Creek	700	534	2,360	2,894	0.41
Dow Chemical/Plaquemine	340	534	1,146	1,680	0.49
Ethyl Corp./Baton Rouge	270	534	910	1,444	0.53
Ethyl Corp./Houston	150	534	506	1,040	0.69
Monochem/Geismar	300	889	1,011	1,900	0.63
PPG/Guayanilla	500	534	1,685	2,219	0.44
PPG/Lake Charles	300	534	1,011	1,545	0.52
Shell/Deer Park	900	534	3,034	3,568	0.40
Shell/Norco	700	534	2,360	2,894	0.41
Stauffer/Long Beach	170	534	573	1,107	0.65
Tenneco/Houston	255	889	860	1,749	0.69
	6,835	$8,720	$23,041	$31,761	0.46

[1] Includes fugitive control costs plus incremental incineration costs at the VCM plant.
[2] Costs derived from Table 7-6.
[2] Effluent costs based on data presented in Table 7-16.

Table 7-25. Existing VCM Plants - Annualized Cost Summary

Alternative I

Plant Owner/Location	Capacity (Million lb/yr)	Annualized Costs Air[1] $(000)/yr	Annualized Costs Water[2] $(000)/yr	EDC Charge[3] $(000)/yr	Total $(000)/yr	Total ¢/lb at Cpty
Allied/Geismar	340	$ 405	$ 229	$ 432	$1,066	0.31
B. F. Goodrich/Calvert City	1,000	333	674	1,270	2,277	0.23
Continental Oil/Westlake	730	362	492	927	1,781	0.24
Dow Chemical/Freeport	180	422	121	229	772	0.43
Dow Chemical/Oyster Creek	700	365	472	889	1,726	0.25
Dow Chemical/Plaquemine	340	405	229	432	1,066	0.31
Ethyl Corp./Baton Rouge	270	412	182	343	937	0.35
Ethyl Corp./Houston	150	426	101	191	718	0.48
Monochem/Geismar	300	676	202	381	1,259	0.42
PPG/Guayanilla	500	387	337	635	1,359	0.27
PPG/Lake Charles	300	409	202	381	992	0.33
Shell/Deer Park	900	344	607	1,143	2,094	0.23
Shell/Norco	700	365	472	889	1,726	0.25
Stauffer/Long Beach	170	423	115	216	754	0.44
Tenneco/Houston	255	663	172	324	1,159	0.45
	6,835	$6,397	$4,607	$8,682	$19,686	0.29

[1] Includes fugitive control costs plus incremental incineration costs at the VCM plant.
[2] Costs derived from Table 7-6.
[3] Effluent costs based on data presented in Table 7-16.
Increased EDC charge to recover annualized costs at EDC plants plus a pre-tax return of 15% on capital. Assumes 1.58 lb EDC/lb VCM.

Table 7-26. Existing VCM Plants - Profitability Summary

Alternative I

Plant Owner/Location	Estimated ROI (Return in Investment)[1] Before Control	After Control No Price Increase	After Control Price Increase[2]	Relative Change in ROI[3]
Allied Chemical/Geismar	4.0%	1.3%	4.1	3
B. F. Goodrich/Calvert City	8.3	5.2	9.0	8
Continental Oil/Westlake	6.8	4.0	7.4	9
Dow Chemical/Freeport	2.1	(0.8)[4]	1.5	(29)[4]
Dow Chemical/Oyster Creek	6.7	3.8	7.3	9
Dow Chemical/Plaquemine	4.0	1.3	4.1	3
Ethyl Corp./Baton Rouge	3.3	1.1	3.1	(6)
Ethyl Corp./Houston	1.5	(1.5)	0.7	(53)
Monochem/Geismar	3.5	0.2	2.8	(20)
PPG/Guayanilla	5.4	2.7	5.8	7
PPG/Lake Charles	3.5	0.8	3.5	0
Shell/Deer Park	7.8	4.8	8.5	9
Shell/Norco	6.7	3.8	7.3	9
Stauffer/Long Beach	1.9	(1.0)	1.2	(37)
Tenneco/Houston	3.1	(0.4)	2.1	(32)

[1] Profit after tax ÷ investment.

[2] Price increase assumed to be sufficient to recover total annualized costs plus a 15% pre-tax return on total capital. Calculation (refer to Tables 7-24 and 7-25 for cost details):

$$\text{Price Increase} = \frac{0.15\ (\$31{,}761{,}000) + \$19{,}686{,}000}{6{,}835{,}000{,}000}$$

$$= 0.36¢/\text{lb VCM}$$

[3] ROI after control (with price increase) relative to ROI before control.

[4] ( ) denotes decrease/loss.

Table 7-27. Existing VCM Plants - Capital Summary

Alternative II

Plant Owner/Location	Capacity (Million lb/yr)	Estimated Capital Requirement: Air[1] $(000)	Water[2] $(000)	Total $(000)	¢/lb/yr
Allied/Geismar	340	$ 534	$1,146	$1,680	0.49
B. F. Goodrich/Calvert City	1,000	534	3,371	3,905	0.39
Continental Oil/Westlake	730	2,070	2,461	4,531	0.62
Dow Chemical/Freeport	180	534	607	1,141	0.63
Dow Chemical/Oyster Creek	700	534	2,360	2,894	0.41
Dow Chemical/Plaquemine	340	534	1,146	1,680	0.49
Ethyl Corp./Baton Rouge	270	534	910	1,444	0.53
Ethyl Corp./Houston	150	534	506	1,040	0.69
Monochem/Geismar	300	889	1,011	1,900	0.63
PPG/Guayanilla	500	534	1,685	2,219	0.44
PPG/Lake Charles	300	534	1,011	1,545	0.52
Shell/Deer Park	900	534	3,034	3,568	0.40
Shell/Norco	700	534	2,360	2,894	0.41
Stauffer/Long Beach	170	534	573	1,107	0.65
Tenneco/Houston	255	889	860	1,749	0.69
	6,835	$10,256	$23,041	$33,297	0.49

[1] Includes fugitive controls plus incremental incineration costs at the VCM plant.
[2] Costs derived from Table 7-6.
[2] Effluent costs based on data presented in Table 7-16.

Table 7-28. Existing VCM Plants - Annualized Cost Summary

Alternative II

Plant Owner/Location	Capacity (Million lb/yr)	Annualized Costs Air[1] $(000)/yr	Annualized Costs Water[2] $(000)/yr	EDC Charge[3] $(000)/yr	Total $(000)/yr	Total $/lb Capacity
Allied/Geismar	340	$405	$229	$432	$1,066	0.31
B. F. Goodrich/Calvert City	1,000	333	674	1,270	2,277	0.23
Continental Oil/Westlake	730	1,315	492	927	2,734	0.38
Dow Chemical/Freeport	180	422	121	229	772	0.43
Dow Chemical/Oyster Creek	700	365	472	889	1,726	0.25
Dow Chemical/Plaquemine	340	405	229	432	1,066	0.31
Ethyl Corp./Baton Rouge	270	412	182	343	937	0.35
Ethyl Corp./Houston	150	426	101	191	718	0.48
Monochem/Geismar	300	676	202	381	1,259	0.42
PPG/Guayanilla	500	387	337	635	1,359	0.27
PPG/Lake Charles	300	409	202	381	992	0.33
Shell/Deer Park	900	344	607	1,143	2,094	0.23
Shell/Norco	700	365	472	889	1,726	0.25
Stauffer/Long Beach	170	423	115	216	754	0.44
Tenneco/Houston	255	663	172	324	1,159	0.45
	6,835	$7,350	$4,607	$8,682	$20,639	0.30

1Includes fugitive control costs plus incremental incineration costs at the VCM plant.
2Costs derived from Table 7-6.
2Effluent costs based on data presented in Table 7-16.
3Increased EDC charge to recover annualized costs at EDC plants plus a pre-tax return of 15% on capital. Assumes 1.58 lb EDC/lb VCM.

Table 7-29. Existing VCM Plants - Profitability Summary

Alternative II

Plant Owner/Location	Estimated ROI (Return in Investment)[1]			
	Before Control	After Control, No Price Increase	After Control, Price Increase[2]	Relative Change in ROI[3]
Allied Chemical/Geismar	4.0%	1.3	4.1%	3
B. F. Goodrich/Calvert City	8.3	5.2	9.0	8
Continental Oil/Westlake	6.8	2.5	5.8	(15)[4]
Dow Chemical/Freeport	2.1	(0.8)	1.5	(29)
Dow Chemical/Oyster Creek	6.7	3.8	7.3	9
Dow Chemical/Plaquemine	4.0	1.3	4.1	3
Ethyl Corp./Baton Rouge	3.3	1.1	3.1	(6)
Ethyl Corp./Houston	1.5	(1.5)	0.7	(53)
Monochem/Geismar	3.5	0.2	2.8	(20)
PPG/Guayanilla	5.4	2.7	5.8	7
PPG/Lake Charles	3.5	0.8	3.5	0
Shell/Deer Park	7.8	4.8	8.5	9
Shell/Norco	6.7	3.8	7.3	9
Stauffer/Long Beach	1.9	(1.0)	1.2	(37)
Tenneco/Houston	3.1	(0.4)	2.1	(32)

[1] Profit after tax ÷ investment.
[2] Assumes same price increase as Alternative I (0.036¢/lb).
[3] ROI after control (with price increase) relative to ROI before control.
[4] ( ) denotes decrease/loss.

Table 7-30. Existing VCM Plants - Capital Summary

Alternative III

Plant Owner/Location	Capacity (Million lb/yr)	Estimated Capital Requirement Air[1] $(000)	Water[2] $(000)	Total $(000)	¢/lb/yr
Allied/Geismar	340	$2,087	$1,146	$3,233	0.95
B. F. Goodrich/Calvert City	1,000	2,937	3,371	6,308	0.63
Continental Oil/Westlake	730	2,070	2,461	4,531	0.62
Dow Chemical/Freeport	180	534	607	1,141	0.63
Dow Chemical/Oyster Creek	700	654	2,360	3,014	0.43
Dow Chemical/Plaquemine	340	534	1,146	1,680	0.49
Ethyl Corp./Baton Rouge	270	1,574	910	2,484	0.92
Ethyl Corp./Houston	150	534	506	1,040	0.69
Monochem/Geismar	300	889	1,011	1,900	0.63
PPG/Guayanilla	500	382	1,685	2,067	0.41
PPG/Lake Charles	300	1,650	1,011	2,661	0.89
Shell/Deer Park	900	2,147	3,034	5,181	0.58
Shell/Norco	700	2,147	2,360	4,507	0.64
Stauffer/Long Beach	170	534	573	1,107	0.65
Tenneco/Houston	255	889	860	1,749	0.69
	6,835	$19,562	$23,041	$42,603	0.62

[1] Includes fugitive control costs plus incremental incineration costs at the VCM plant.
[2] Costs derived from Table 7-6.
[2] Effluent costs based on data presented in Table 7-16.

Table 7-31. Existing VCM Plants - Annualized Cost Summary

Alternative III

Plant Owner/Location	Capacity (Million lb/yr)	Annualized Costs Air[1] $(000)/yr	Annualized Costs Water[2] $(000)/yr	EDC Charge[3] $(000)/yr	Total $(000)/yr	Total $/lb Capacity
Allied/Geismar	340	$1,796	$229	$432	$2,457	0.72
B. F. Goodrich/Calvert City	1,000	2,073	674	1,270	4,017	0.40
Continental Oil/Westlake	730	1,315	492	927	2,734	0.38
Dow Chemical/Freeport	180	422	121	229	772	0.43
Dow Chemical/Oyster Creek	700	137	472	889	1,498	0.21
Dow Chemical/Plaquemine	340	405	229	432	1,066	0.31
Ethyl Corp./Baton Rouge	270	984	182	343	1,509	0.56
Ethyl Corp./Houston	150	426	101	191	718	0.48
Monochem/Geismar	300	676	202	381	1,259	0.42
PPG/Guayanilla	500	381	337	635	1,353	0.27
PPG/Lake Charles	300	1,033	202	381	1,616	0.54
Shell/Deer Park	900	1,366	607	1,143	3,116	0.35
Shell/Norco	700	1,377	472	889	2,738	0.39
Stauffer/Long Beach	170	423	115	216	754	0.44
Tenneco/Houston	255	663	172	324	1,159	0.46
	6,835	$13,477	$4,607	$8,682	$26,766	0.39

[1] Includes fugitive control costs plus incremental incineration costs at the VCM plant.
[2] Costs derived from Table 7-6.
[2] 2Effluent costs based on data presented in Table 7-16.
[3] Increased EDC charge to recover annualized costs at EDC plants plus a pre-tax return of 15% on capital. Assumes 1.58 lb EDC/lb VCM.

Table 7-32. Existing VCM Plants - Profitability Summary

Alternative III

Plant Owner/Location	Estimated ROI (Return on Investment)[1] Before Control	After Control, No Price Increase	After Control, Price Increase[2]	Relative Change in ROI[3]
Allied Chemical/Geismar	4.0%	(1.7)[4]	1.8%	(55%)[4]
B. F. Goodrich/Calvert City	8.3	3.2	8.1	(2)
Continental Oil/Westlake	6.8	2.5	7.1	4
Dow Chemical/Freeport	2.1	(0.8)	2.3	10
Dow Chemical/Oyster Creek	6.7	4.2	8.8	31
Dow Chemical/Plaquemine	4.0	1.3	5.1	28
Ethyl Corp./Baton Rouge	3.3	(1.0)	2.4	(27)
Ethyl Corp./Houston	1.5	(1.5)	1.4	(7)
Monochem/Geismar	3.5	0.2	3.7	6
PPG/Guayanilla	5.4	2.7	6.9	28
PPG/Lake Charles	3.5	(0.7)	2.7	(23)
Shell/Deer Park	7.8	3.5	8.3	6
Shell/Norco	6.7	2.4	6.9	3
Stauffer/Long Beach	1.9	(1.0)	2.1	11
Tenneco/Houston	3.1	(0.4)	3.0	(3)

[1] Profit after tax ÷ investment.

[2] Price increase assumed to be sufficient to recover total annualized costs plus a 15% return on total capital. Calculation (refer to Tables 7-30 and 7-31 for cost details):

$$\text{Price Increase} = \frac{0.15\ (\$42{,}603{,}000) + \$26{,}766{,}000}{6{,}835{,}000{,}000}$$

$$= 0.49¢/\text{lb VCM}$$

[3] ROI after control (with price increase) relative to ROI before control.

[4] ( ) denotes decrease/loss.

Table 7-33. Financial Impact of Alternative Control Levels on New EDC-VCM Plants

	Uncontrolled Plant[a]	Plant Meeting Effluent Regulations Only[b]	Effluent Regulations Plus Alt. I	Effluent Regulations Plus Alt. III
Plant Investment (¢/lb/yr)	4.03	4.37	4.50	4.64
Working Capital	0.80	0.80	0.80	0.80
Total Investment	4.83	5.17	5.30	5.44
Average Sales Price	12.00 ¢/lb	12.00	12.00	12.00
Ethylene (0.49 #/# @ 11.25 ¢/#)	5.51	5.51	5.51	5.51
Chlorine (0.67 #/# @ 6.5¢/#)	4.36	4.36	4.36	4.36
Depreciation	0.40	0.43	0.45	0.46
Other Manufacturing Costs	0.78	0.87	0.96	1.08
Selling, General, Admin.	0.30	0.30	0.30	0.30
Total Cost	11.35	11.47	11.58	11.71
Profit Before Tax	0.65	0.53	0.42	0.29
Profit After Tax	0.325	0.265	0.21	0.145
ROI*	6.7%	5.1%	4.0%	2.7%
Price Increase Required to Maintain Pre-Control ROI				
¢/lb	--	0.17	0.29	0.44
%	--	1.4%	2.4%	3.7%

*Return on investment (profit after tax ÷total investment).

SOURCE: a) Information on uncontrolled plant economics based upon: Final Report - Economic Impact Studies of the Effects of Proposed OSHA Standards for Vinyl Chloride, Foster D. Snell, Inc., September 27, 1974, Exhibit IV-4. (Modified by EPA to reflect current raw material prices and VCM sales prices.)
b) Effluent costs from Table 7-16.
c) Alternative I and Alternative III control costs from Table 7-7.

NOTE: Plant size of 700 millions pounds per year.

Table 7-34. Existing PVC Plants - Capital Summary

Control Scenario #1

Plant Owner/Location	Capacity (Million lb/yr)	Estimated Capital Requirement: Air[1] $(000)	Water[2] $(000)	Total $(000)	¢/lb/yr
Air Products/Calvert City	135	$4,315	$1,134	$5,449	4.04
Air Products/Pensacola	75	3,537	630	4,167	5.56
B. F. Goodrich/Avon Lake	260	5,585	2,184	7,769	2.99
B. F. Goodrich/Henry	220	5,121	1,848	6,969	3.17
B. F. Goodrich/Long Beach	115	4,057	966	5,023	4.37
B. F. Goodrich/Louisville	145	4,371	1,218	5,589	3.85
B. F. Goodrich/Pedricktown	140	4,089	1,176	5,265	3.76
Borden/Iliopolis	140	4,354	1,176	5,530	3.95
Borden/Leominster	175	4,743	1,470	6,213	3.55
Continental Oil/Aberdeen	260	6,087	2,184	8,271	3.18
Continental Oil/Oklahoma City	220	5,986	1,848	7,834	3.56
Diamond Shamrock/Delaware City	100	4,247	840	5,087	5.09
Diamond Shamrock/Deer Park	270	6,181	2,268	8,449	3.13
Dow Chemical/Midland	100	3,865	840	4,705	4.71
Ethyl/Baton Rouge	180	4,643	1,512	6,155	3.42
Firestone/Perryville	230	5,338	1,932	7,270	3.16
Firestone/Pottstown	170	4,176	1,428	5,604	3.30
General Tire/Ashtabula	125	4,172	1,050	5,222	4.18
Georgia-Pacific/Plaquemine	220	5,240	1,848	7,088	3.22
Goodyear/Niagara Falls	100	4,298	840	5,138	5.14
Goodyear/Plaquemine	105	1,350	882	2,232	2.13
Great American/Fitchburg	70	3,521	588	4,109	5.87
Jennat/Torrance	4	1,173	34	1,207	30.18
Jennat/Tucker	6	1,184	50	1,234	20.57
Jennat/Somerset	5	1,179	42	1,221	24.42
Keysor-Century/Saugus	35	2,459	294	2,753	7.87
Monsanto/Springfield	70	2,105	588	2,693	3.85
Occidental Petroleum/Burlington	170	1,718	1,428	3,146	1.85
Occidental Petroleum/Hicksville	15	2,049	126	2,175	14.50
Pantasote/Passaic	60	2,850	504	3,354	5.59
Pantasote/Point Pleasant	95	3,820	788	4,618	4.86
Robintech/Painesville	250	5,530	2,100	7,630	3.05

Table 7-34 cont.

Shintech/Freeport	220	5,673	1,848	7,521	3.42
Stauffer/Delaware City	175	5,074	1,470	6,544	3.74
Stauffer/Long Beach	150	5,767	1,260	7,027	4.68
Tenneco/Burlington	165	4,940	1,386	6,326	3.83
Tenneco/Flemington	70	3,487	588	4,075	5.82
Tenneco/Pasadena	240	4,698	2,016	6,714	2.80
Union Carbide/South Charleston	60	2,629	504	3,133	5.22
Union Carbide/Texas City	300	8,055	2,520	10,575	3.53
Uniroyal/Painesville	110	3,725	924	4,649	4.23
	5,755	$167,391	$48,342	$215,733	3.75

[1]Dispersion Plants at Alternative I (stripping to 30,000 ppm), all other plants at Case A (improved stripping).
[2]Costs developed using Table 7-6 and specific plant process information.
[2]Effluent costs based on Table 7-16.

Table 7-35. Existing PVC Plants - Annualized Cost Summary

Control Scenario #1

Plant Owner/Location	Capacity (Million lb/yr)	Annualized Costs Air[1] $(000)	Annualized Costs Water[2] $(000)	VCM Charge[3] $(000)	Total $(000)/yr	Total ¢/lb Capacity
Air Products/Calvert City	135	$1,205	$243	$486	$1,934	1.43
Air Products/Pensacola	75	1,087	135	270	1,492	1.99
B. F. Goodrich/Avon Lake	260	1,431	468	936	2,835	1.09
B. F. Goodrich/Henry	220	1,392	396	792	2,580	1.17
B. F. Goodrich/Long Beach	115	1,166	207	414	1,787	1.55
B. F. Goodrich/Louisville	145	1,252	261	522	2,035	1.40
B. F. Goodrich/Pedricktown	140	1,400	252	504	2,156	1.54
Borden/Iliopolis	140	1,206	252	504	1,962	1.40
Borden/Leominster	175	1,254	315	630	2,199	1.26
Continental Oil/Aberdeen	260	1,449	468	936	2,853	1.10
Continental Oil/Oklahoma City	220	1,508	396	792	2,696	1.23
Diamond Shamrock/Delaware City	100	1,251	180	360	1,791	1.79
Diamond Shamrock/Deer Park	270	1,458	486	972	2,916	1.08
Dow Chemical/Midland	100	1,137	180	360	1,677	1.68
Ethyl/Baton Rouge	180	1,340	324	648	2,312	1.28
Firestone/Perryville	230	1,325	414	828	2,567	1.12
Firestone/Pottstown	170	1,370	306	612	2,288	1.35
General Tire/Ashtabula	125	1,180	225	450	1,855	1.48
Georgia-Pacific/Plaquemine	220	1,315	396	792	2,503	1.14
Goodyear/Niagara Falls	100	1,226	180	360	1,766	1.77
Goodyear/Plaquemine	105	919	189	378	1,486	1.42
Great American/Fitchburg	70	1,161	126	252	1,539	2.20
Jennat/Torrance	4	623	7	14	644	16.10
Jennat/Tucker	6	625	11	22	658	10.97
Jennat/Somerset	5	624	9	18	651	13.02
Keysor-Century/Saugus	35	891	63	126	1,080	3.09
Monsanto/Springfield	70	818	126	252	1,196	1.71
Occidental Petroleum/Burlington	170	1,199	306	612	2,117	1.25
Occidental Petroleum/Hicksville	15	806	27	54	887	5.91
Pantasote/Passaic	60	932	108	216	1,256	2.09
Pantasote/Point Pleasant	95	1,134	171	342	1,647	1.73
Robintech/Painesville	250	1,343	450	900	2,693	1.08

Table 7-35 cont.

Shintech/Freeport	220	1,404	396	792	2,592	1.18
Stauffer/Delaware City	175	1,402	315	630	2,347	1.34
Stauffer/Long Beach	150	1,597	270	540	2,407	1.60
Tenneco/Burlington	165	1,393	297	594	2,284	1.38
Tenneco/Flemington	70	1,081	126	252	1,459	2.08
Tenneco/Pasadena	240	1,102	432	864	2,398	1.00
Union Carbide/South Charleston	60	915	108	216	1,239	2.07
Union Carbide/Texas City	300	2,066	540	1,080	3,686	1.23
Uniroyal/Painesville	110	1,211	198	396	1,805	1.64
	5,755	$49,198	$10,359	$20,718	$80,275	1.39

[1]Dispersion plants at Alternative I (stripping to 30,000 ppm), all other plants at Case A (improved stripping).
[2]Costs developed using Table 7-6 and specific plant process information.
[2]Effluent costs based on Table 7-16.
[3]VCM charge from Table 7-26 (footnote #2).

Table 7-36. Existing PVC Plants - Profitability Summary

Control Scenario #1

Plant Owner/Location	Estimated ROI (Return on Investment)[1] Before Control	After Control, No Price Increase	After Control, Price Increase[2]	Relative Change in ROI[3]
Air Products/Calvert City	9.3%	4.9	9.3	0
Air Products/Pensacola	6.5	1.9	5.5	(15%)[4]
B. F. Goodrich/Avon Lake	13.2	8.5	13.9	5
B. F. Goodrich/Henry	12.2	7.5	12.7	4
B. F. Goodrich/Long Beach	8.5	4.1	8.2	(4)
B. F. Goodrich/Louisville	9.8	5.3	9.8	0
B. F. Goodrich/Pedricktown	9.5	4.8	9.3	(2)
Borden/Iliopolis	9.5	5.1	9.5	0
Borden/Leominster	10.8	6.3	11.1	3
Continental Oil/Aberdeen	13.2	8.4	13.7	4
Continental Oil/Oklahoma City	12.2	7.2	12.3	1
Diamond Shamrock/Delaware City	7.8	3.1	7.0	(10)
Diamond Shamrock/Deer Park	13.5	8.6	14.1	4
Dow Chemical/Midland	7.8	3.3	7.3	(6)
Ethyl/Baton Rouge	11.0	6.4	11.3	3
Firestone/Perryville	12.5	7.8	13.0	4
Firestone/Pottstown	10.0	7.2	10.2	2
General Tire/Ashtabula	8.9	4.5	8.8	(1)
Georgia-Pacific/Plaquemine	12.2	7.5	12.7	4
Goodyear/Niagara Falls	7.8	3.1	7.0	(10)
Goodyear/Plaquemine	9.5	5.6	10.2	7
Great American/Fitchburg	6.1	1.4	4.9	(20)
Jennat/Torrance	0.6	(5.6)	(4.8)	(900)
Jennat/Tucker	1.3	(4.1)	(3.2)	(346)
Jennat/Somerset	1.0	(4.6)	(3.7)	(470)
Keysor-Century/Saugus	3.4	(1.3)	1.5	(57)
Monsanto/Springfield	6.0	3.7	6.0	0
Occidental Petroleum/Burlington	12.7	8.4	13.8	9
Occidental Petroleum/Hicksville	0.7	(5.0)	(3.0)	(529)

Table 7-36 cont.

Pantasote/Passaic	5.5	1.2	4.6	(16)
Pantasote/Point Pleasant	7.5	3.1	7.0	(7)
Robintech/Painesville	13.0	8.3	13.7	5
Shintech/Freeport	12.2	7.4	12.5	2
Stauffer/Delaware City	10.8	6.0	10.8	0
Stauffer/Long Beach	9.9	4.7	9.1	(8)
Tenneco/Burlington	10.5	5.7	10.4	(1)
Tenneco/Flemington	6.1	1.6	5.1	(16)
Tenneco/Pasadena	12.7	8.4	13.8	9
Union Carbide/South Charleston	5.4	2.8	4.9	(9)
Union Carbide/Texas City	14.2	8.5	14.0	(1)
Uniroyal/Painesville	8.3	3.8	7.9	(5)

[1] Profit after tax ÷ total investment (estimated).

[2] Increase in price required to recover total annualized cost plus a 20% before-tax return on total control capital. Calculation (refer to Table 7-34 and 7-35 for cost details):

$$\text{Price Increase} = \frac{0.2\ (\$215{,}733{,}000) + \$80{,}275{,}000}{5{,}755{,}000{,}000}$$

$$= 2.15¢/\text{lb}$$

[3] ROI after control (with price increase) relative to ROI before control.

[4] ( ) denotes decrease/loss.

Table 7-37. Existing PVC Plants - Capital Summary

Control Scenario #2

Plant Owner/Location	Capacity (Million lb/yr)	Estimated Capital Requirement: Air[1] $(000)	Water[2] $(000)	Total $(000)	¢/lb/yr
Air Products/Calvert City	135	$4,315	$1,134	$5,449	4.04
Air Products/Pensacola	75	3,537	630	4,167	5.56
B. F. Goodrich/Avon Lake	260	6,681	2,184	8,865	3.41
B. F. Goodrich/Henry	220	6,374	1,848	8,222	3.74
B. F. Goodrich/Long Beach	115	4,057	966	5,023	4.37
B. F. Goodrich/Louisville	145	5,187	1,218	6,405	4.42
B. F. Goodrich/Pedricktown	140	5,106	1,176	6,282	4.49
Borden/Iliopolis	140	4,354	1,176	5,530	3.95
Borden/Leominster	175	4,743	1,470	6,213	3.55
Continental Oil/Aberdeen	260	6,087	2,184	8,271	3.18
Continental Oil/Oklahoma City	220	5,986	1,848	7,834	3.50
Diamond Shamrock/Delaware City	100	4,948	840	5,788	5.79
Diamond Shamrock/Deer Park	270	6,181	2,268	8,449	3.13
Dow Chemical/Midland	100	3,865	840	4,705	4.71
Ethyl/Baton Rouge	180	5,970	1,512	7,482	4.16
Firestone/Perryville	230	5,338	1,932	7,270	3.16
Firestone/Pottstown	170	6,197	1,428	7,625	4.49
General Tire/Ashtabula	125	4,172	1,050	5,222	4.18
Georgia-Pacific/Plaquemine	220	5,240	1,848	7,088	3.22
Goodyear/Niagara Falls	100	4,298	840	5,138	5.14
Goodyear/Plaquemine	105	1,350	882	2,232	2.13
Great American/Fitchburg	70	3,521	588	4,109	5.87
Jennat/Torrance	4	1,526	34	1,560	39.00
Jennat/Tucker	6	1,622	50	1,672	27.87
Jennat/Somerset	5	1,576	42	1,618	32.36
Keysor-Century/Saugus	35	2,459	294	2,753	7.87
Monsanto/Springfield	70	3,711	588	4,299	6.14
Occidental Petroleum/Burlington	170	1,718	1,428	3,146	1.85
Occidental Petroleum/Hicksville	15	2,049	126	2,175	14.50
Pantasote/Passaic	60	2,850	504	3,354	5.59
Pantasote/Point Pleasant	95	3,820	798	4,618	4.89
Robintech/Painesville	250	5,530	2,100	7,630	3.05

Table 7-37 cont.

Shintech/Freeport	220	5,673	1,848	7,521	3.42
Stauffer/Delaware City	175	6,171	1,470	7,641	4.37
Stauffer/Long Beach	150	5,767	1,260	7,027	4.68
Tenneco/Burlington	165	6,119	1,386	7,505	4.55
Tenneco/Flemington	70	3,487	588	4,075	5,82
Tenneco/Pasadena	240	4,698	2,016	6,714	2.80
Union Carbide/South Charleston	60	3,560	504	4,064	6.77
Union Carbide/Texas City	300	8,055	2,520	10,575	3.53
Uniroyal/Painesville	110	5,124	924	6,048	5.50
	5,755	$183,022	$48,342	$231,364	4.02

[1]Dispersion plants at Alternative II, Case A (stripping to 2,000 ppm), all other plants at Case A (improved stripping).
[2]Costs developed using Table 7-6 and specific plant process information.
[2]Effluent costs based on Table 7-16.

Table 7-38. Existing PVC Plants - Annualized Cost Summary

Control Scenario #2

Plant Owner/Location	Capacity (Million lb/yr)	Annualized Costs Air[1] $(000)	Annualized Costs Water[2] $(000)	VCM Charge[3] $(000)	Total $(000)/yr	Total ¢/lb Capacity
Air Products/Calvert City	135	$1,205	$243	$486	$1,934	1.43
Air Products/Pensacola	75	1,087	135	270	1,492	1.99
B. F. Goodrich/Avon Lake	260	2,034	468	936	3,438	1.32
B. F. Goodrich/Henry	220	2,104	396	792	3,292	1.27
B. F. Goodrich/Long Beach	115	1,166	207	414	1,787	1.55
B. F. Goodrich/Louisville	145	1,682	261	522	2,465	1.70
B. F. Goodrich/Pedricktown	140	1,949	252	504	2,705	1.93
Borden/Iliopolis	140	1,206	252	504	1,962	1.40
Borden/Leominster	175	1,254	315	630	2,199	1.26
Continental Oil/Aberdeen	260	1,449	468	936	2,853	1.10
Continental Oil/Oklahoma City	220	1,508	396	792	2,696	1.23
Diamond Shamrock/Delaware City	100	1,616	180	360	2,156	2.16
Diamond Shamrock/Deer Park	270	1,458	486	972	2,916	1.08
Dow Chemical/Midland	100	1,137	180	360	1,677	1.68
Ethyl/Baton Rouge	180	2,100	324	648	3,072	1.71
Firestone/Perryville	230	1,325	414	828	2,567	1.12
Firestone/Pottstown	170	2,682	306	612	3,600	2.12
General Tire/Ashtabula	125	1,180	225	450	1,855	1.48
Georgia-Pacific/Plaquemine	220	1,315	396	792	2,503	1.14
Goodyear/Niagara Falls	100	1,226	180	360	1,766	1.77
Goodyear/Plaquemine	105	919	189	378	1,486	1.42
Great American/Fitchburg	70	1,161	126	252	1,539	2.20
Jennat/Torrance	4	817	7	14	838	20.95
Jennat/Tucker	6	858	11	22	891	14.85
Jennat/Somerset	5	838	9	18	865	17.30
Keysor-Century/Saugus	35	891	63	126	1,080	3.09
Monsanto/Springfield	70	1,784	126	252	2,162	3.09
Occidental Petroleum/Burlington	170	1,199	306	612	2,117	1.25
Occidental Petroleum/Hicksville	15	806	27	54	887	5.91
Pantasote/Passaic	60	932	108	216	1,256	2.09
Pantasote/Point Pleasant	95	1,134	171	342	1,647	1.73
Robintech/Painesville	250	1,343	450	900	2,693	1.08

Table 7-38 cont.

Shintech/Freeport	220	1,404	396	792	2,592	1.18
Stauffer/Delaware City	175	2,005	315	630	2,950	1.69
Stauffer/Long Beach	150	1,597	270	540	2,407	1.60
Tenneco/Burlington	165	2,051	297	594	2,942	1.78
Tenneco/Flemington	70	1,081	126	252	1,459	2.08
Tenneco/Pasadena	240	1,102	432	864	2,398	1.00
Union Carbide/South Charleston	60	1,469	108	216	1,793	2.99
Union Carbide/Texas City	300	2,066	540	1,080	3,686	1.23
Uniroyal/Painesville	110	2,023	198	396	2,617	2.38
	5,755	$58,163	$10,359	$20,718	$89,240	1.55

[1]Dispersion plants at Alternative II, Case A (stripping to 2,000 ppm), all other plants at Case A (improved stripping).
[2]Costs developed using Table 7-6 and specific plant process information.
[3]Effluent costs based on Table 7-16.
[3]VCM charge from Table 7-26 (footnote #2).

Table 7-39. Existing PVC Plants - Profitability Summary

Control Scenario #2

Plant Owner/Location	Estimated ROI (Return on Investment)[1] Before Control	After Control, No Price Increase	After Control, Price Increase[2]	Relative Change in ROI[3]
Air Products/Calvert City	9.3	4.9	9.7	4
Air Products/Pensacola	6.5	1.9	5.9	(9)[4]
B. F. Goodrich/Avon Lake	13.2	7.7	13.5	2
B. F. Goodrich/Henry	12.2	7.0	12.6	3
B. F. Goodrich/Long Beach	8.5	4.1	8.6	1
B. F. Goodrich/Louisville	9.8	4.4	9.2	(6)
B. F. Goodrich/Pedricktown	9.5	3.9	8.7	8
Borden/Iliopolis	9.5	5.1	10.0	5
Borden/Leominster	10.8	6.3	11.5	6
Continental Oil/Aberdeen	13.2	8.4	14.2	8
Continental Oil/Oklahoma City	12.2	7.2	12.8	5
Diamond Shamrock/Delaware City	7.8	2.3	6.5	(17)
Diamond Shamrock/Deer Park	13.5	8.6	14.6	8
Dow Chemical/Midland	7.8	3.3	7.7	(1)
Ethyl/Baton Rouge	11.0	5.3	10.4	(5)
Firestone/Perryville	12.5	7.8	13.5	8
Firestone/Pottstown	10.0	6.0	9.1	(9)
General Tire/Ashtabula	8.9	4.5	9.2	3
Georgia-Pacific/Plaquemine	12.2	7.5	13.2	8
Goodyear/Niagara Falls	7.8	3.1	7.4	(5)
Goodyear/Plaquemine	9.5	5.6	10.7	13
Great American/Fitchburg	6.1	1.4	5.2	(15)
Jennat/Torrance	0.6	(7.0)	(6.1)	(1117)
Jennat/Tucker	1.3	(5.3)	(4.3)	(431)
Jennat/Somerset	1.0	(6.0)	(5.1)	(610)
Keysor-Century/Saugus	3.4	(1.3)	1.7	(50)
Monsanto/Springfield	6.0	2.1	4.5	(25)
Occidental Petroleum/Burlington	12.7	8.4	14.3	13
Occidental Petroleum/Hicksville	0.7	(5.0)	(2.8)	(500)

Table 7-39 cont.

Pantasote/Passaic	5.5	1.2	4.9	(11)
Pantasote/Point Pleasant	7.5	3.1	7.3	(3)
Robintech/Painesville	13.0	8.4	14.2	9
Shintech/Freeport	12.2	7.4	13.0	7
Stauffer/Delaware City	10.8	5.1	10.2	(6)
Stauffer/Long Beach	9.9	4.7	9.6	(3)
Tenneco/Burlington	10.5	4.7	9.7	(8)
Tenneco/Flemington	6.1	1.0	5.4	(11)
Tenneco/Pasadena	12.7	8.4	14.3	13
Union Carbide/South Charleston	5.4	1.9	4.1	(24)
Union Carbide/Texas City	14.2	8.5	14.5	2
Uniroyal/Painesville	8.3	2.2	6.5	(22)

[1] Profit after tax ÷ total investment (estimated).

[2] Increase in price required to recover total annualized cost plus a 20% before-tax return on total control capital.
Calculation (refer to Table 7-37 and 7-38 for cost details):

$$\text{Price Increase} = \frac{0.20\ (\$231{,}364{,}000) + \$89{,}240{,}000}{5{,}755{,}000{,}000}$$

$$= 2.35¢/\text{lb}$$

[3] ROI after control (with price increase) relative to ROI before control.

[4] ( ) denotes decrease/loss.

Table 7-40. Existing PVC Plants - Capital Summary

Control Scenario #3

Plant Owner/Location	Capacity (Million lb/yr)	Estimated Capital Requirement: Air[1] $(000)	Water[2] $(000)	Total $(000)	¢/lb/yr
Air Products/Calvert City	135	$4,315	$1,134	$5,449	4.04
Air Products/Pensacola	75	3,537	630	4,167	5.56
B. F. Goodrich/Avon Lake	260	9,363	2,184	11,547	4.44
B. F. Goodrich/Henry	220	9,787	1,848	11,635	5.29
B. F. Goodrich/Long Beach	115	4,057	966	4,923	4.28
B. F. Goodrich/Louisville	145	6,765	1,218	7,983	5.51
B. F. Goodrich/Pedricktown	140	7,414	1,176	8,590	6.14
Borden/Iliopolis	140	4,354	1,176	5,530	3.95
Borden/Leominster	175	4,743	1,470	6,213	3.55
Continental Oil/Aberdeen	260	6,087	2,184	8,271	3.18
Continental Oil/Oklahoma City	220	5,986	1,848	7,834	3.56
Diamond Shamrock/Delaware City	100	6,159	840	6,999	7.00
Diamond Shamrock/Deer Park	270	6,181	2,268	8,449	3.13
Dow Chemical/Midland	100	3,865	840	4,705	4.71
Ethyl/Baton Rouge	180	9,745	1,512	11,257	6.25
Firestone/Perryville	230	5,338	1,932	7,270	3.16
Firestone/Pottstown	170	14,820	1,428	16,248	9.56
General Tire/Ashtabula	125	4,172	1,050	5,222	4.18
Georgia-Pacific/Plaquemine	220	5,240	1,848	7,088	3.22
Goodyear/Niagara Falls	100	4,298	840	5,138	5.14
Goodyear/Plaquemine	105	1,350	882	2,232	2.13
Great American/Fitchburg	70	3,521	588	4,109	5.87
Jennat/Torrance	4	1,729	34	1,763	44.08
Jennat/Tucker	6	1,907	50	1,957	32.66
Jennat/Somerset	5	1,822	42	1,864	37.28
Keysor-Century/Saugus	35	2,459	294	2,753	7.87
Monsanto/Springfield	70	8,850	588	9,438	13.48
Occidental Petroleum/Burlington	170	1,718	1,428	3,146	1.85
Occidental Petroleum/Hicksville	15	2,049	126	2,175	14.50
Pantasote/Passaic	60	2,850	504	3,354	5.59
Pantasote/Point Pleasant	95	3,820	798	4,618	4.86
Robintech/Painesville	250	5,530	2,100	7,630	3.05

Table 7-40 cont.

Shintech/Freeport	220	5,673	1,848	7,521	3.42
Stauffer/Delaware City	175	8,852	1,470	10,322	5.90
Stauffer/Long Beach	150	5,767	1,260	7,027	4.68
Tenneco/Burlington	165	9,165	1,386	10,551	6.39
Union Carbide/Texas City	300	8,055	2,520	10,575	3.53
Uniroyal/Painesville	110	9,539	924	10,463	9.51
	5,755	$225,564	$48,342	$273,906	4.76

[1]Dispersion plants at Alternative II, Case B (incineration), all other plants at Case A (improved stripping).
[2]Costs developed using Table 7-6 and specific plant process information.
[2]Effluent costs based on Table 7-16.

Table 7-41. Existing PVC Plants - Annualized Cost Summary

Control Scenario #3

Plant Owner/Location	Capacity (Million lb/yr)	Annualized Costs Air[1] $(000)	Annualized Costs Water[2] $(000)	VCM Charge[3] $(000)	Total $(000)/yr	Total ¢/lb Capacity
Air Products/Calvert City	135	$1,205	$243	$486	$1,934	1.43
Air Products/Pensacola	75	1,087	135	270	1,492	1.99
B. F. Goodrich/Avon Lake	260	6,120	468	936	7,524	2.89
B. F. Goodrich/Henry	220	7,064	396	792	8,252	3.75
B. F. Goodrich/Long Beach	115	1,166	207	414	1,787	1.47
B. F. Goodrich/Louisville	145	4,331	261	522	5,114	3.53
B. F. Goodrich/Pedricktown	140	5,575	252	504	6,331	4.52
Borden/Iliopolis	140	1,206	252	504	1,962	1.40
Borden/Leominster	175	1,214	315	630	2,199	1.26
Continental Oil/Aberdeen	260	1,449	468	936	2,853	1.10
Continental Oil/Oklahoma City	220	1,508	396	792	2,696	1.23
Diamond Shamrock/Delaware City	100	3,734	180	360	4,274	4.27
Diamond Shamrock/Deer Park	270	1,458	486	972	2,916	1.08
Dow Chemical/Midland	100	1,137	180	360	1,677	1.68
Ethyl/Baton Rouge	180	7,483	324	648	8,455	4.70
Firestone/Perryville	230	1,325	414	828	2,567	1.12
Firestone/Pottstown	170	12,668	306	612	13,586	7.99
General Tire/Ashtabula	125	1,180	225	450	1,855	1.48
Georgia-Pacific/Plaquemine	220	1,315	396	792	2,503	1.14
Goodyear/Niagara Falls	100	1,226	180	360	1,766	1.77
Goodyear/Plaquemine	105	919	189	378	1,486	1.42
Great American/Fitchburg	70	1,161	126	252	1,539	2.20
Jennat/Torrance	4	1,460	7	14	1,481	37.03
Jennat/Tucker	6	1,758	11	22	1,791	29.85
Jennat/Somerset	5	1,613	9	18	1,640	32.80
Keysor-Century/Saugus	35	891	63	126	1,080	3.09
Monsanto/Springfield	70	8,716	121	252	9,094	12.99
Occidental Petroleum/Burlington	170	1,199	306	612	2,117	1.25
Occidental Petroleum/Hicksville	15	806	27	54	887	5.91
Pantasote/Passaic	60	932	108	216	1,256	2.09
Pantasote/Point Pleasant	95	1,134	171	342	1,647	1.73
Robintech/Painesville	250	1,343	450	900	2,693	1.08

Table 7-41 cont.

Shintech/Freeport	220	1,404	396	792	2,592	1.18
Stauffer/Delaware City	175	6,091	315	630	7,036	4.02
Stauffer/Long Beach	150	1,597	270	540	2,407	1.60
Tenneco/Burlington	165	6,580	297	594	7,471	4.53
Tenneco/Flemington	70	1,081	126	252	1,459	2.08
Tenneco/Pasadena	240	1,102	432	864	2,398	1.00
Union Carbide/South Charleston	60	5,704	108	216	6,028	10.05
Union Carbide/Texas City	300	2,066	540	1,080	3,686	1.23
Uniroyal/Painesville	110	7,867	198	396	8,461	7.69
	5,755	$118,915	$10,359	$20,718	$149,992	2.61

[1]Dispersion plants at Alternative II, Case B (incineration), all other plants at Case A (improved stripping).
[2]Costs developed using Table 7-6 and specific plant process information.
[3]Effluent costs based on Table 7-16.
[3]VCM charge from Table 7-26 (footnote #2).

Table 7-42. Existing PVC Plants - Profitability Summary

Control Scenario #3

Plant Owner/Location	Estimated ROI (Return on Investment)[1] Before Control	After Control, No Price Increase	After Control, Price Increase[2]	Relative Change in ROI[3]
Air Products/Calvert City	9.3	4.9	12.2	31
Air Products/Pensacola	6.5	1.9	7.9	22
B. F. Goodrich/Avon Lake	13.2	3.6	12.0	(9)[4]
B. F. Goodrich/Henry	12.2	1.2	8.9	(27)
B. F. Goodrich/Long Beach	8.5	4.2	11.2	32
B. F. Goodrich/Louisville	9.8	0.7	7.7	(21)
B. F. Goodrich/Pedricktown	9.5	(1.3)	5.5	(42)
Borden/Iliopolis	9.5	5.1	12.5	32
Borden/Leominster	10.8	6.3	14.2	31
Continental Oil/Aberdeen	13.2	8.4	17.3	31
Continental Oil/Oklahoma City	12.2	7.2	15.6	28
Diamond Shamrock/Delaware City	7.8	(1.3)	4.7	(40)
Diamond Shamrock/Deer Park	13.5	8.6	17.6	30
Dow Chemical/Midland	7.8	3.3	9.0	15
Ethyl/Baton Rouge	11.0	(1.2)	6.0	(45)
Firestone/Perryville	12.5	5.9	14.6	17
Firestone/Pottstown	10.0	(1.6)	2.6	(74)
General Tire/Ashtabula	9.9	9.5	11.6	30
Georgia-Pacific/Plaquemine	12.2	7.5	16.1	32
Goodyear/Niagara Falls	7.8	3.1	9.6	23
Goodyear/Plaquemine	9.5	5.6	13.3	40
Great American/Fitchburg	6.1	1.4	7.2	18
Jennat/Torrance	0.6	(12.2)	(11.0)	(1933)
Jennat/Tucker	1.3	(11.1)	(9.7)	(846)
Jennat/Somerset	1.0	(11.6)	(10.3)	(1130)
Keysor-Century/Saugus	3.4	(1.3)	3.3	(3)
Monsanto/Springfield	6.0	(6.9)	(3.7)	(162)
Occidental Petroleum/Burlington	12.7	8.4	17.4	37
Occidental Petroleum/Hicksville	0.7	(5.0)	(1.7)	(343)

Table 7-42 cont.

Pantasote/Passaic	5.5	1.2	6.8	24
Pantasote/Point Pleasant	7.5	3.1	9.5	27
Robintech/Painesville	13.0	8.3	17.2	32
Shintech/Freeport	12.2	7.4	15.8	30
Stauffer/Delaware City	10.8	0.1	7.3	(32)
Stauffer/Long Beach	9.9	4.7	12.0	21
Tenneco/Burlington	10.5	(1.0)	6.0	(43)
Tenneco/Flemington	6.1	1.6	7.4	21
Tenneco/Pasadena	12.7	8.5	17.4	37
Union Carbide/South Charleston	5.4	(4.5)	(1.4)	(126)
Union Carbide/Texas City	14.0	8.5	17.6	24
Uniroyal/Painesville	8.3	(6.6)	(0.9)	(111)

[1]Profit after tax ÷ 'total investment (estimated).
[2]Increase in price required to recover total annualized cost plus a 20% before-tax return on total control capital.
Calculation (refer to Table 7-40 and 7-41 for cost details):

$$\text{Price Increase} = \frac{0.2\ (\$273{,}906{,}000) + \$149{,}992{,}000}{5{,}755{,}000{,}000}$$

$$= 3.56¢/\text{lb}$$

[3]ROI after control (with price increase) relative to ROI before control.
[4]( ) denotes decrease/loss.

Table 7-43. Existing PVC Plants - Capital Summary

Control Scenario #4

Plant Owner/Location	Capacity (Million lb/yr)	Estimated Capital Requirement: Air[1] $(000)	Water[2] $(000)	Total $(000)	¢/lb/yr
Air Products/Calvert City	135	$6,362	$1,134	$7,496	5.55
Air Products/Pensacola	75	4,491	630	5,121	6.83
B. F. Goodrich/Avon Lake	260	12,065	2,184	14,249	5.48
B. F. Goodrich/Henry	220	11,794	1,848	13,642	6.20
B. F. Goodrich/Long Beach	115	5,831	966	6,797	5.91
B. F. Goodrich/Louisville	145	8,318	1,218	9,536	6.58
B. F. Goodrich/Pedricktown	140	8,200	1,176	9,376	6.70
Borden/Iliopolis	140	6,468	1,176	7,644	5.46
Borden/Leominster	175	7,338	1,470	8,808	5.03
Continental Oil/Aberdeen	260	9,856	2,184	12,040	4.63
Continental Oil/Oklahoma City	220	8,889	1,848	10,737	4.88
Diamond Shamrock/Delaware City	100	6,979	840	7,819	7.82
Diamond Shamrock/Deer Park	270	10,088	2,268	12,356	4.58
Dow Chemical/Midland	100	5,433	840	6,273	6.27
Ethyl/Baton Rouge	180	11,189	1,512	12,701	7.06
Firestone/Perryville	230	8,693	1,932	10,625	4.62
Firestone/Pottstown	170	15,131	1,428	16,559	9.74
General Tire/Ashtabula	125	6,081	1,050	7,131	5.70
Georgia-Pacific/Plaquemine	220	8,456	1,848	10,304	4.68
Goodyear/Niagara Falls	100	5,866	840	6,706	6.71
Goodyear/Plaquemine	105	1,667	882	2,549	2.43
Great American/Fitchburg	70	3,874	588	4,462	6.37
Jennat/Torrance	4	1,729	34	1,763	44.08
Jennat/Tucker	6	1,907	50	1,957	32.62
Jennat/Somerset	5	1,822	42	1,864	37.28
Keysor-Century/Saugus	35	2,640	294	2,934	8.38
Monsanto/Springfield	70	8,850	588	9,438	13.48
Occidental Petroleum/Burlington	170	2,263	1,428	3,691	2.17
Occidental Petroleum/Hicksville	15	2,114	126	2,240	14.93
Pantasote/Passaic	60	3,608	504	4,112	6.85
Pantasote/Point Pleasant	95	5,041	798	5,839	6.15
Robintech/Painesville	250	9,161	2,100	11,261	4.50

Table 7-43 cont.

Shintech/Freeport	220	8,889	1,848	10,737	4.88
Stauffer/Delaware City	175	10,486	1,470	11,956	6.83
Stauffer/Long Beach	150	7,150	1,260	8,410	5.61
Tenneco/Burlington	165	10,595	1,386	11,981	7.26
Tenneco/Flemington	70	4,374	588	4,962	7.09
Tenneco/Pasadena	240	8,927	2,016	10,943	4.56
Union Carbide/South Charleston	60	7,254	504	7,758	12.93
Union Carbide/Texas City	300	13,488	2,520	16,008	5.34
Uniroyal/Painesville	110	9,080	924	10,804	9.82
	5,755	$293,247	$48,342	$341,589	5.94

[1]Dispersion plants at Alternative II, Case B (incineration). All other plants at Case B (incineration).
[2]Effluent costs based on Table 7-16.

Table 7-44. Existing PVC Plants - Annualized Cost Summary

Control Scenario #4

Plant Owner/Location	Capacity (Million lb/yr)	Annualized Costs Air[1] $(000)	Annualized Costs Water[2] $(000)	VCM Charge[3] $(000)	Total $(000)/yr	¢/lb Capacity
Air Products/Calvert City	135	$5,126	$243	$486	$5,855	4.34
Air Products/Pensacola	75	3,463	135	270	3,868	5.16
B. F. Goodrich/Avon Lake	260	10,517	468	936	11,921	4.59
B. F. Goodrich/Henry	220	10,357	396	792	11,545	5.25
B. F. Goodrich/Long Beach	115	4,605	207	414	5,226	4.54
B. F. Goodrich/Louisville	145	7,002	261	522	7,785	5.37
B. F. Goodrich/Pedricktown	140	7,189	252	504	7,945	5.69
Borden/Iliopolis	140	5,244	252	504	6,000	4.29
Borden/Leominster	175	6,099	315	630	7,044	4.03
Continental Oil/Aberdeen	260	11,203	468	936	12,607	4.85
Continental Oil/Oklahoma City	220	7,244	396	792	8,432	3.83
Diamond Shamrock/Delaware City	100	5,582	180	360	6,122	6.12
Diamond Shamrock/Deer Park	270	8,364	486	972	9,822	3.64
Dow Chemical/Midland	100	4,207	180	360	4,747	4.75
Ethyl/Baton Rouge	180	9,865	324	648	10,837	6.02
Firestone/Perryville	230	7,381	414	828	8,623	3.75
Firestone/Pottstown	170	13,491	306	612	14,409	8.48
General Tire/Ashtabula	125	4,862	225	450	5,537	4.43
Georgia-Pacific/Plaquemine	220	7,155	396	792	8,343	3.79
Goodyear/Niagara Falls	100	4,296	180	360	4,836	4.84
Goodyear/Plaquemine	105	1,564	189	378	2,131	2.03
Great American/Fitchburg	70	3,229	126	252	3,607	5.15
Jennat/Torrance	4	1,460	7	14	1,481	37.03
Jennat/Tucker	6	1,758	11	22	1,791	29.85
Jennat/Somerset	5	1.613	9	18	1,640	32.80
Keysor-Century/Saugus	35	2,101	63	126	2,290	6.54
Monsanto/Springfield	70	8,716	126	252	9,094	12.99
Occidental Petroleum/Burlington	170	2,080	306	612	2,998	1.76
Occidental Petroleum/Hicksville	15	1,388	27	54	1,469	9.79
Pantasote/Passaic	60	2,907	108	216	3,231	5.39
Pantasote/Point Pleasant	95	4,026	171	342	4,539	4.78
Robintech/Painesville	250	7,828	450	900	9,178	3.67

Table 7-44 cont.

Shintech/Freeport	220	7,244	396	792	8,432	3.83
Stauffer/Delaware City	175	8,828	315	630	9,773	5.58
Stauffer/Long Beach	150	5,581	270	540	6,391	4.26
Tenneco/Burlington	165	8,964	297	594	9,855	5.97
Tenneco/Flemington	70	3,326	126	252	3,704	5.29
Tenneco/Pasadena	240	7,605	432	864	8,901	3.71
Union Carbide/South Charleston	60	6,240	108	216	6,564	10.94
Union Carbide/Texas City	300	9,518	540	1,080	11,138	3.71
Uniroyal/Painesville	110	8,745	198	396	9,339	8.49
	5,755	$247,973	$10,359	$20,718	$279,050	4.85

[1]Dispersion plants at Alternative II, Case B (incineration). All other plants at Case B (incineration).
[2]Effluent costs based on Table 7-16.
[3]VCM charge from Table 7-26 (footnote #2).

Table 7-45. Existing PVC Plants - Profitability Summary

Control Scenario #4

Plant Owner/Location	Estimated ROI (Return on Investment)[1] Before Control	After Control, No Price Increase	After Control, Price Increase[2]	Relative Change in ROI[3]
Air Products/Calvert City	9.3	(1.0)	10.6	14
Air Products/Pensacola	6.5	(3.2)	6.5	0
B. F. Goodrich/Avon Lake	13.2	(0.4)	13.2	0
B. F. Goodrich/Henry	12.2	(2.0)	10.6	(13)[4]
B. F. Goodrich/Long Beach	9.5	(1.6)	9.4	11
B. F. Goodrich/Louisville	9.8	(2.8)	8.6	(12)
B. F. Goodrich/Pedricktown	9.5	(3.4)	7.8	(19)
Borden/Iliopolis	9.5	(0.9)	10.9	15
Borden/Leominster	10.8	0.1	12.7	18
Continental Oil/Aberdeen	13.2	(1.0)	13.1	(1)
Continental Oil/Oklahoma City	12.2	1.0	14.4	18
Diamond Shamrock/Delaware City	7.8	(4.4)	5.6	(28)
Diamond Shamrock/Deer Park	13.5	2.1	16.2	20
Dow Chemical/Midland	7.8	(2.2)	8.3	6
Ethyl/Baton Rouge	11.0	(3.7)	8.0	(27)
Firestone/Perryville	12.5	1.3	15.0	20
Firestone/Pottstown	10.0	(2.2)	4.9	(51)
General Tire/Ashtabula	8.9	(1.3)	10.1	13
Georgia-Pacific/Plaquemine	12.2	1.1	14.6	20
Goodyear/Niagara Falls	7.8	(2.3)	8.1	4
Goodyear/Plaquemine	9.5	4.2	17.2	81
Great American/Fitchburg	6.1	(3.4)	6.3	3
Jennat/Torrance	0.6	(12.2)	(10.2)	(1800)
Jennat/Tucker	1.3	(11.1)	(8.7)	(769)
Jennat/Somerset	1.0	(11.6)	(9.4)	(1040)
Keysor-Century/Saugus	3.4	(5.7)	2.0	(41)
Monsanto/Springfield	6.0	(6.9)	(1.6)	(127)
Occidental Petroleum/Burlington	12.7	7.0	22.0	73
Occidental Petroleum/Hicksville	0.7	(8.5)	(2.9)	(514)

Table 7-45 cont.

Pantasote/Passaic	5.5	(3.9)	5.3	(4)
Pantasote/Point Pleasant	7.5	(2.4)	8.1	8
Robintech/Painesville	13.0	1.7	15.8	22
Shintech/Freeport	12.2	1.0	14.4	18
Stauffer/Delaware City	10.8	(2.9)	8.8	(19)
Stauffer/Long Beach	9.9	(0.7)	11.2	13
Tenneco/Burlington	10.5	(3.7)	7.7	(27)
Tenneco/Flemington	6.1	(3.5)	6.0	(2)
Tenneco/Pasadena	12.7	1.5	15.4	21
Union Carbide/South Charleston	5.4	(5.2)	0	(100)
Union Carbide/Texas City	14.2	2.0	16.1	13
Uniroyal/Painesville	8.3	(7.8)	1.8	(78)

[1]Profit after tax ÷total investment (estimated).
[2]Increase in price required to recover total annualized cost plus a 20% before-tax return on total control capital.
Calculation (refer to Table 7-43 and 7-44 for cost details):

$$\text{Price Increase} = \frac{0.2\ (\$341{,}589{,}000) + \$279{,}050{,}000}{5{,}755{,}000{,}000}$$

$$= 6.04¢/\text{lb}$$

[3]ROI after control (with price increase) relative to ROI before control.
[4]( ) denotes decrease/loss.

Table 7-46. Financial Impact of Various Control Systems at New Suspension Process PVC Plants

	Uncontrolled Plant	Plant Meeting Effluent Regulations (Incl. VCM Alt. II)**	Plant Meeting Effluent Regulations Plus Case A	Case B
Plant Investment (¢/lb/yr)	14.00	14.84	17.81	19.32
Working Capital	5.75	5.75	5.75	5.75
Total Investment	19.75	20.59	23.56	25.07
Average Sales Price (¢/lb)	24.00	24.00	24.00	24.00
Less: Freight	1.70	1.70	1.70	1.70
Net Sales	22.30	22.30	22.30	22.30
Cost of Sales	15.00	15.48	16.08	18.82
Depreciation	1.40	1.46	1.67	1.78
Admin., Selling, R & D, Interest	1.98	1.98	1.98	1.98
Total Cost	18.38	18.92	19.73	22.58
Profit Before Tax	3.92	3.38	2.57	(0.28)
Profit After Tax	1.96	1.69	1.285	---
ROI*	9.9%	8.2%	5.5%	---
Price Increase Required to Maintain Pre-control ROI				
¢/lb	---	0.71	2.11	5.26
%	---	3.0%	8.8%	21.9%

*Return on investment (profit after tax ÷ total investment).
**This case represents a new plant that complies with the effluent regulations for PVC plants and obtains VCM from an Alt. II-controlled plant that complies with the water effluent regulations for VCM plants. This VCM cost includes the cost of compliance with effluent regulations at EDC plants as well as Alt. II air emission control costs. New source water effluent regulations, equal to BAT regulations, were used.

Table 7-46 cont.

NOTE: Model plant size is 150,000,000 lb/yr.

SOURCES: a) Uncontrolled model plant investment and operating costs based upon: In-Depth Study of Polyvinyl Chloride Production, Houdry Division, Air Products and Chemicals, Inc. December 6, 1974, p. PVC-87. (Modified by EPA after discussion with industry representatives.)
b) Effluent costs based upon Table 7-16.
c) Air pollution control costs from 7-8.
d) VCM price increase from Table 7-26 (footnote #2).

Table 7-47. Financial Impact of Various Control Systems at New Dispersion Process PVC Plants

	Uncontrolled Plant	Plant Meeting Effluent Regulations (Incl. VCM Alt. II)**	Plant Meeting Effluent Regulations Plus Alt. I	Alt. II, Case A	Alt. II, Case B
Plant Investment (¢/lb/yr)	47.50	48.34	55.99	59.40	65.96
Working Capital	8.25	8.25	8.25	8.25	8.25
Total Investment	55.75	56.59	64.24	67.65	74.21
Average Sales Price (¢/lb)	34.00	34.00	34.00	34.00	34.00
Less: Freight	1.55	1.55	1.55	1.55	1.55
Net Sales	32.45	32.45	32.45	32.45	32.45
Cost of Sales	21.10	21.57	23.60	25.17	36.38
Depreciation	4.75	4.82	5.47	5.76	6.32
Admin., Selling, R&D, Interest	3.20	3.20	3.20	3.20	3.20
Total Cost	29.05	29.59	32.27	34.13	45.90
Profit Before Tax	3.40	2.86	0.18	(1.68)	(13.45)
Profit After Tax	1.70	1.43	0.09	--	--
ROI*	3.1%	2.5%	0.1%	--	--
Price Increase Required to Maintain Pre-control ROI					
¢/lb	--	0.59	3.74	5.81	17.98
%	--	1.7%	11.0%	17.0%	52.9%

*Return on investment (profit after tax ÷ total investment).

**This case represents a new plant that complies with the effluent regulations for PVC plants and obtains VCM from an Alt. II-controlled plant that complies with the water effluent regulations for VCM plants. This VCM cost includes the cost of compliance with effluent regulations at EDC plants as well as Alt. II air emission control costs. New source water effluent regulations, equal to BAT regulations, were used.

NOTE: Model plant size is 30,000,000 lb/yr.

SOURCES: a) Uncontrolled model plant investment and operating costs based upon discussion with industry representatives.
b) Effluent costs based upon Table 7-16.
c) Air pollution control costs from Table 7-9.
d) VCM price increase from Table 7-26 (footnote #2).

Table 7-48. Effect of Economies of Scale on New Dispersion Process PVC Plants

	Uncontrolled Plant	Plant Meeting Effluent Regulations (Incl. VCM Alt. II)**	Plant Meeting Effluent Regulations Plus Alt. I	Alt. II, Case A	Alt. II, Case B
Plant Investment (¢/lb/yr)	33.10	33.94	36.74	38.68	46.23
Working Capital	5.75	5.75	5.75	5.75	5.75
Total Investment	38.85	39.69	42.49	44.43	51.98
Average Sales Price (¢/lb)	34.00	34.00	34.00	34.00	34.00
Less: Freight	1.55	1.55	1.55	1.55	1.55
Net Sales	32.45	32.45	32.45	32.45	32.45
Cost of Sales	21.10	21.57	22.34	23.39	31.79
Depreciation	3.31	3.38	3.62	3.79	4.43
Admin., Selling, R&D, Interest	2.23	2.23	2.23	2.23	2.23
Total Cost	26.64	27.18	28.19	29.41	38.45
Profit Before Tax	5.81	5.27	4.26	3.04	(6.00)
Profit After Tax	2.905	2.635	2.13	1.52	--
ROI*	7.5%	6.6%	5.0%	3.4%	--
Price Increase Required to Maintain Pre-control ROI					
¢/lb	--	0.66	2.09	3.60	13.77
%	--	1.9%	6.2%	10.6%	40.5%

*Return on investment (profit after tax ÷ total investment).

**This case represents a new plant that complies with the effluent regulations for PVC plants and obtains VCM from an Alt. II-controlled plant that complies with the effluent regulations for VCM plants. This VCM cost includes the cost of compliance with effluent regulations at EDC plants as well as Alt. II air emission control costs. New source effluent regulations, equal to BAT regulations, were used.

NOTE: Model plant size is 100,000,000 lb/yr.

Table 7-49. Financial Impact of Various Control Systems at New Bulk Process PVC Plants

	Uncontrolled Plant	Plant Meeting Effluent Regulations (Incl. VCM Alt. II)**	Plant Meeting Effluent Regulations Plus Case A	Plant Meeting Effluent Regulations Plus Case B
Plant Investment (¢/lb/yr)	16.72	17.56	18.87	19.17
Working Capital	4.43	4.43	4.43	4.43
Total Investment	21.15	21.99	23.30	23.60
Average Sales Price (¢/lb)	24.00	24.00	24.00	24.00
Less: Freight	1.50	1.50	1.50	1.50
Net Sales	22.50	22.50	22.50	22.50
Cost of Sales	14.00	14.47	15.27	15.88
Depreciation	1.67	1.74	1.84	1.86
Admin., Selling, R & D, Interest	2.91	2.91	2.91	2.91
Total Cost	18.58	19.12	20.02	20.65
Profit Before Tax	3.92	3.38	2.48	1.85
Profit After Tax	1.96	1.69	1.24	0.925
ROI*	9.3%	7.7%	5.3%	3.9%
Price Increase Required to Maintain Pre-control ROI				
¢/lb	--	0.69	1.84	2.52
%	--	2.9%	7.7%	10.5%

*Return on investment (profit after tax ÷ total investment).

**This case represents a new plant that complies with the effluent regulations for PVC plants and obtains VCM from an Alt. II-controlled plant that complies with the water effluent regulations for VCM plants. This VCM cost includes the cost of compliance with effluent regulations at EDC plants as well as Alt. II air emission control costs. New source water effluent regulations, equal to BAT regulations, were used.

NOTE: Model plant size is 100,000,000 lb/yr.

SOURCES:
a) Uncontrolled model plant investment and operating costs based upon discussion with industry representatives.
b) Effluent costs based upon Table 7-16.
c) Air pollution control costs from Table 7-10.
d) VCM price increase from Table 7-26 (footnote #2).

8. RATIONALE FOR THE PROPOSED STANDARD

This chapter presents the rationale for the selection of the emission sources, emission limits, and testing, reporting, and recordkeeping requirements included in the proposed standard. The alternative control levels discussed in Chapter 5 which have been selected as the basis for the proposed standard are identified and the reasons for selecting them are discussed. Some of the data in this chapter are extracted from Chapters 2 through 7 since those chapters contain the information on which the rationale for the proposed standard is primarily based. Therefore, the references for the data included in this chapter can be found in Chapters 2 through 7.

8.1 Selection of Emission Sources to be Covered By the Proposed Standard

For the reasons explained in Chapter 2, EPA has determined that ethylene dichloride-vinyl chloride plants and polyvinyl chloride plants are to be covered by the proposed standard. As explained in Chapter 1, the term "ethylene dichloride-vinyl chloride plant" refers to any plant which produces ethylene dichloride (by the oxychlorination process), vinyl chloride, or both ethylene dichloride and vinyl chloride.

As noted in Chapter 5, EPA has concluded that, for purposes of regulating vinyl chloride, best available control technology means control of all emission points within ethylene dichloride-vinyl chloride and polyvinyl chloride plants. There are control technologies which have been used for each type of emission point, and regulation of only some of the emission points was determined

to be less than best available control technology. Thus, the proposed standard applies to all of the major processing equipment in ethylene dichloride-vinyl chloride and polyvinyl chloride plants. Emissions from both normal operation and from relief discharges are to be regulated. Relief discharges are included because they cause short-term high level emissions which can be prevented in almost all cases.

Two sources of vinyl chloride need explanation. First, the reactor may, in some polyvinyl chloride plants, serve also as the stripper. When this is the case, the regulation controlling reactors is applicable. Second, the definition of stripper for all resins except bulk resins includes "in the slurry form" so that other vessels, e.g. silos, following this stage of the process will not be considered strippers. Likewise, the definition of stripper for bulk resins does not include silos.

The proposed standard also applies to all known fugitive emission sources, including equipment used for loading (or unloading) vinyl chloride monomer into transfer equipment from storage vessels, slip gauges, leakage from seals on pumps, compressors, and agitators, leakage from relief valves, manual venting of gases, opening of equipment such as for maintenance and inspection, flasks used in obtaining samples of vinyl chloride monomer, leakage from equipment, and inprocess wastewater. Although the emissions from each of these sources when considered individually may appear relatively small, they are included in the proposed standard because when combined they represent a significant portion of the total plant emissions. Based on data reported to EPA by individual companies in the spring of 1974, fugitive emissions represented approximately 40 percent of the total emissions from polyvinyl chloride

plants and approximately 25 percent of the total emissions from ethylene dichloride-vinyl chloride plants. Inprocess wastewater is included in the list of fugitive emission sources subject to the proposed standard because available data indicate that vinyl chloride contained in water exposed to the atmosphere is lost rather rapidly. Precise measurements have not been made to prove that this vinyl chloride is emitted to the air. However, as explained in Chapter 4, section 4.10, data on the solubility of vinyl chloride in water indicate that this is likely to be the case.

For several of the fugitive emission sources, the proposed standard applies only to those pieces of equipment "in vinyl chloride service." This term is defined to exclude pieces of equipment such as pumps and storage containers which are used to handle materials other than vinyl chloride and which contain essentially no vinyl chloride.

Two fugitive emission sources which were considered for specific regulation but which are not included in the proposed standard as such are vacuum pumps and steam jets. It was concluded that a separate regulation is unnecessary because more general regulations are included which already cover vacuum pumps and steam jets. For example, steam jets used to displace vinyl chloride or other contaminants from equipment are covered by general regulations controlling the removal of vinyl chloride from equipment by any means.

8.2 Rationale for the Emission Limits

The purpose of the proposed standard is to minimize the risk to the public health by setting emission limits which will reduce emissions to

the level attainable with the best available control technology for each emission source in ethylene dichloride-vinyl chloride and polyvinyl chloride plants. Since there are many technical decisions involved in developing a standard on the basis of "best available control technology," EPA has established two criteria for making the technical decisions. The two criteria--use and adaptability, and costs--are discussed in Chapter 5.

The final decisions on standards for all emission sources in ethylene dichloride-vinyl chloride and polyvinyl chloride plants were based on data on control systems received through requests for information under the authority of section 114 of the Clean Air Act, on-site observation of plant processes, consultation with industry representatives and control equipment vendors, an emission test, and two studies completed under contract to EPA. See Chapter 4 for the results of these investigations. Evaluation of all data led EPA to conclude that there are only two emission sources for which there was any question in selecting an emission limit based on the established criteria for best available control technology. The reasons why there is some question about these particular emission sources are explained in Chapter 5. These two, the oxychlorination reactor in ethylene dichloride-vinyl chloride plants and the sources following the stripper in the manufacture of dispersion resins in polyvinyl chloride plants, are discussed under 8.2.1 and 8.2.2, respectively. Emission sources for which an emission limit could be selected without any question based on the established criteria for "best available control technology" are discussed in 8.2.3 and 8.2.4.

8.2.1 Oxychlorination Reactor at Ethylene Dichloride-Vinyl Chloride Plants

The issue for the oxychlorination reactor concerned the interpretation of the second criterion for best available control technology, i.e., are the costs of controlling the effluent gas stream from the oxychlorination reactor grossly disproportionate to the degree of emission reduction which would be achieved by that control? As discussed more completely in Chapter 5, EPA identified three alternative control levels for the oxychlorination reactor: (1) no control, (2) that which is equivalent to controlling process variables, and (3) that which is equivalent to control by incineration. The emission factors, mass emissions, percent control, hydrogen chloride emissions, energy consumption, and costs for an average-sized plant (318 million kilograms or 700 million pounds of vinyl chloride produced per year) attaining each of these alternative control levels are displayed in Table 8-1. The emissions from an uncontrolled plant are also shown.

The alternative of proposing an emission limit which is equivalent to control by incineration was rejected for the following reasons. The oxychlorination reactor has a large volume, low hydrocarbon concentration effluent gas stream, and large quantities of supplemental fuel would be required for its combustion. One company has reduced the gas volume from the oxychlorination reactor and the associated energy costs by recycling the process gas stream and using oxygen instead of air to feed into the process. A second company is also planning to install this technology. Although the recycling and oxygen feed methodology can be used for two types of oxychlorination

TABLE 8-1. ALTERNATIVE CONTROL LEVELS FOR TYPICAL [318 MILLION KILOGRAMS (700 POUNDS) PER YEAR] ETHYLENE DICHLORIDE-VINYL CHLORIDE PLANT[1]

ALTERNATIVE CONTROL LEVEL	EMISSIONS, KG/100 KG (LB/100 LB)	EMISSIONS, KG/HR (LB/HR)	EMISSION REDUCTION, PERCENT	HCl EMISSIONS FROM INCINERATOR-SCRUBBER, KG/HR (LB/HR)	ANNUAL ENERGY CONSUMPTION, FUEL, MM KCAL./YR (MM BTU/YR)	ANNUAL ENERGY CONSUMPTION, POWER, (1000 KWH/YR)	COSTS, CAPITAL, $1000	COSTS, ANNUAL, $1000
UNCONTROLLED EMISSIONS								
A Fugitive Emissions	0.122(0.122)	47.8(106.3)						
B Ethylene Dichloride Purification	0.050(0.050)	19.7(43.8)						
C Vinyl Chloride Formation and Purification	0.240(0.240)	94.5(210.0)						
D Oxychlorination Process	0.036(0.036)	14.1(31.5)						
Total	0.448(0.448)	176.1(391.6)						
ALTERNATIVE I								
A Fugitive Emissions	0.012(0.012)	4.7(10.6)	90					
B Ethylene Dichloride Purification	0.000(0.000)	0(0)	99					
C Vinyl Chloride Formation and Purification	0.000(0.000)	0(0)	99					
D Oxychlorination Process	0.036(0.036)	14.1(31.5)	0					
Total	0.048(0.048)	18.8(42.1)	90	5.5(12.2)	Negligible	1,272	$889	$793
ALTERNATIVE II								
A Fugitive Emissions	0.012(0.012	4.7(10.6)	90					
B. Ethylene Dichloride Purification	0.000(0.000)	0 (0)	99					
C. Vinyl Chloride Formation and Purification	0.000(0.000	0 (0)	99					
D. Oxychlorination Process	0.0200 [2](0.012)	5.6(12.5)	66					
Total	0.032(0.032)	10.3(23.1)	94	(See footnote 3)	(See footnote 3)		(See footnote 3)	
ALTERNATIVE III								
A. Fugitive Emissions	0.012(0.012)	4.7(10.6)	90					
B Ethylene Dichloride Purification	0.000(0.000)	0(0)	99					
C. Vinyl Chloride Formation and Purification	0.000(0.000	0(0)	00					
D Oxychlorination	0.002(0.002)	0.8(1.8)	95					
Total	0.014(0.015)	5.5(12.4)	97	8.8(19.5)	74,600 (296,000)	1,272	$1,903	$1,657

[1]Assumes 8000 hr/yr operation.
[2]This emission factor is in terms of ethylene dichloride product from the oxychlorination process. The remaining emission factors are in terms of vinyl chloride product.
[3]Data for Alternative II are not presented because the secondary environmental and economic impacts resulting from control systems used to attain the emission level of Alternative II would vary for individual plants, depending on the type of control system used for the oxychlorination process. For individual plants, control of the oxychlorination process to attain the emission level of Alternative II could range from no control to a process change to incineration. Therefore, the secondary and economic impacts for Alternative II could range between that of Alternative I, which represents no control of the oxychlorination process, to that of Alternative III, which represents incineration of the emissions from the oxychlorination process. Most existing plants can attain Alternative II control level without controlling the oxychlorination process; however, one plant would possibly have to use incineration.

reactors, further research would be needed to determine whether this technology can be used for each of the types of processes at all of the plants. A third company is conducting a pilot study on controlling the oxychlorination reactor emissions with catalytic oxidation, another method for reducing the high energy costs. This system has not been used commercially for the oxychlorination reactor and it is not known at this time whether it will be feasible for the plants to use. These facts, combined with the fact that the oxychlorination reactor represents a relatively small emission source at an average plant, led EPA to conclude that the energy costs of incinerating the large volume, low hydrocarbon concentration effluent gas stream from the oxychlorination reactor at the average plant would be grossly disproportionate to the emission reduction achieved.

The same factors which were considered in eliminating the alternative of proposing an emission limit achievable by incineration or equivalent favored the alternative of no controls at any plants. If the alternative of no controls for the oxychlorination reactor were adopted, the proposed emission limits for the other two point sources and the fugitive emission sources would still reduce emissions by 90 percent at an average plant. Due to process variables, however, there is a wide range in the reported emissions from the oxychlorination reactor at the various plants from 0.0024 kg/100 kg to 0.106 kg/100 kg ethylene dichloride product (0.0024 lb/100 lb to 0.106 lb/100 lb). In terms of mass emissions per unit time, the emission rates vary between 0.5 to 46.3 kg/hr (1.2 to 103 lb/hr)

among the plants. Thus, the alternative of no controls for the oxychlorination reactor was rejected because at some plants, unlike at the average plant, the oxychlorination reactor represents a relatively large source of emissions and in EPA's judgment, the energy costs associated with incineration of the emissions from the oxychlorination reactor would not be grossly disproportionate to the emission reduction achieved at these plants with the emission rates at the upper end of the range.

Thus, the alternative selected as the basis for the proposed standard limits vinyl chloride emissions from the oxychlorination reactor in ethylene dichloride-vinyl chloride plants to 0.02 kg/100 kg ethylene dichloride product. Based on individual plants' measurements of vinyl chloride reported to EPA under section 114 of the Clean Air Act, this emission level represents best available control technology through control of process variables and can be met at most plants by maintaining operations so that the emission rate (kg/100 kg) does not increase. The proposed emission limit is essentially a cut-off point which requires the plants at the upper end of the range to reduce emissions preferably by instituting process changes, and if this is not possible, by installing incinerators or equivalent add-on control. Incinerators or equivalent add-on control may have to be used to attain the proposed standard at a maximum of one existing plant which has relatively large emissions (in addition to those companies which have already installed, or are already planning to install, incinerators). Based on available data, emissions from the oxychlorination reactor at the majority of the existing plants meeting the proposed standard would be

below 4.5 kg/hr (10 lb/hr) and the emissions from no plant would exceed 9.0 kg/hr (20 lb/hr). Although establishing the standard in this way does not result in as great an emission reduction as installation of incinerators or equivalent control for the oxychlorination reactor at all of the plants, the proposed standard is based on a consideration of costs only where the energy costs would be grossly disproportionate to the emission reduction achieved. Furthermore, as technologies using less energy for controlling the oxychlorination reactor are developed, EPA will evaluate the desirability of proposing a standard which would require a higher degree of control at all plants.

8.2.2 Sources Following the Stripper in Dispersion Resin Manufacture at Polyvinyl Chloride Plants

As discussed in Chapter 5, the second part of the proposed standard about which there was some question in selecting an emission limit based on the established criteria for "best available control technology" concerns the sources following the stripper in dispersion resin manufacture. This issue concerned the interpretation of the first criterion for best available control technology, i.e. the degree to which developing control meets the criterion of being available for the plants to use.

The three alternatives considered by EPA were (1) establishing the level of the standard so that it is representative of stripping technology that is currently available for all grades of dispersion resins at all plants, (2) establishing the level of the standard so that it is representative of stripping technology

which has been achieved by one plant for all resin grades and by two plants for some of their resin grades, and is judged to be available for the remaining plants within the maximum time allowed for compliance under section 112, or (3) establishing the level of the standard so that dispersion resins would have to be stripped to the same level as other resins.

The issue involved in selecting one of the alternatives as the the basis for the proposed standard for dispersion resin manufacture concerned the time frame in which the degree of stripping required by each alternative would be available for the plants to use. However, to the extent that they could be analyzed, the emission factors, mass emissions, energy consumption, and costs for an average-sized dispersion plant (14 million kilograms or 30 million pounds per year) attaining each of these alternative control levels are displayed in Table 8-2. The emissions from an uncontrolled plant are also shown.

Based on all available information, EPA concluded that the alternative of basing the proposed standard on the degree of stripping technology that is available now for all grades of dispersion resins at all plants does not meet the criteria for best available control technology. This is because, for several reasons which are outlined in Chapter 5, stripping technology has not been developed as a method of controlling vinyl chloride emissions for dispersion resins as it has for other resins. In general, current stripping has been developed only to the extent that it is necessary for economic purposes. Based on available

TABLE 8-2. ALTERNATIVE CONTROL LEVELS FOR TYPICAL 14 MILLION KILOGRAMS (30 MILLION POUNDS) PER YEAR PVC DISPERSION PLANT

ALTERNATIVE CONTROL LEVEL	EMISSIONS, KG/100 KG (LB/100 LB)	EMISSIONS, KG/HR[1] (LB/HR)	EMISSION REDUCTION, PERCENT	ANNUAL ENERGY CONSUMPTION: FUEL, MM KCAL./YR (MM BTU/YR)	ANNUAL ENERGY CONSUMPTION: POWER, 1000 KWH/YR	COSTS: CAPITAL, $1000	COSTS: ANNUAL, $1000
UNCONTROLLED							
Fugitive Emissions	1.13 (1.13)	19.1 (42.4)					
Reactor Opening	0.15 (0.15)	2.53 (5.62)					
Relief Valve Discharge	0.22 (0.22)	3.71 (8.25)					
Stripper	1.23 (1.23)	20.7 (46.1)	-	-			
Monomer Recovery System	0.50 (0.50)	8.4 (18.8)					
Process Equipment Following the Stripper (slurry blend tanks, dryers, storage, etc.)	2.78 (2.78)	46.9 (104.3)					
Total	6.01 (6.01)	101.5 (225.5)					
ALTERNATIVE I							
Fugitive Emissions	0.113 (0.113)	1.9 (4.24)	90				
Reactor Opening	0.001 (0.001)	0.017 (0.037)	99				
Relief Valve Discharge	0.000 (0.000)	0 (0)	99+				
Stripper							
Monomer Recovery System	0.001 (0.001)	0.017 (0.037)	99+				
Process Equipment Following the Stripper (slurry blend tanks, dryers, storage, etc.)	2.78 (2.78)	46.9 (104.3)	0				
Total	2.90 (2.90)	48.8 (108.6)	52	3,400 (12,400)	400	$2,295	$803
ALTERNATIVE II							
Fugitive Emissions	0.113 (0.113)	1.91 (4.24)	90				
Reactor Opening	0.001 (0.001)	0.017 (0.037)	99				
Relief Valve Discharge	0.000 (0.000)	0 (0)	99+				
Stripper							
Monomer Recovery System	0.001 (0.001)	0.017 (0.037)	99+				
Process Equipment Following the Stripper (slurry blend tanks, dryers, storage, etc.	0.200 (0.200)	3.37 (7.50)	93				
Total	0.315 (0.315)	5.31 (11.8)	95	35,400 (138,400)	1010[2]	$3,319[2]	$1363[2]
ALTERNATIVE III							
Fugitive Emissions	0.113 (0.113)	1.91 (4.24)	90				
Reactor Opening	0.001 (0.001)	0.017 (0.051)	99				
Relief Valve Discharge	0.000 (0.000)	0 (0)	99+				
Stripper							
Monomer Recovery System	0.001 (0.001)	0.017 (0.037)	99+				
Process Equipment Following the Stripper (slurry blend tanks, dryers, storage, etc.	0.04 (0.04)	0.675 (1.50)					
Total	0.155 (0.155)	2.62 (5.81)	97	Unavailable because this level of stripping has not been commercially demonstrated.			

[1] Assumes 8000 hr/yr operation.

[2] Assumes control by approved stripping.

data, it is judged that by the time the proposed standard must be implemented, improved stripping technology could be available for plants to use. If this alternative were selected as the basis for the proposed standard, it would provide no incentive to further develop existing stripping techniques to control emissions. Furthermore, although they are more costly in terms of energy, environmental, and economic impacts, add-on controls (e.g. incinerators) are available which could be used to reduce emissions to a much lower level than that represented by this alternative.

The alternative of establishing the level of the standard so that dispersion resins would have to be stripped to the same level as other resins was rejected, because the level of stripping required by that alternative (400 ppm) has not been demonstrated for dispersion resins and EPA concluded that the time required for research and development of such technology far exceeds the maximum time allowed by section 112 for compliance (two years from the date of promulgation or two and a half years from the date of proposal). Even the plant which has been most optimistic about achieving this degree of stripping reports that it will be unable to do so for at least four years. Furthermore, this level of control cannot be achieved in the manufacture of dispersion resins by add-on controls, and therefore no options to undeveloped stripping technology would be available for use by the plants. Therefore, this alternative could necessitate closure of dispersion resin plants until the controls could be developed. As stated in Chapter 2, EPA concluded that best available control technology rather than closure of plants would be the approach adopted for the proposed standard. This alternative obviously does not meet the second criterion for best available control

technology, i.e. the technology has not been used at any plant and is not generally adaptable for use at other plants within the time allowed by section 112 for compliance.

EPA recognizes that the second alternative (stripping to 2000 ppm) represents a level of stripping which currently cannot be achieved for all dispersion resins. Of the eight companies which presently manufacture dispersion resins and plan to continue manufacturing dispersion resins, this level of stripping has been achieved by one company for all grades of its dispersion resins and by two companies for some grades of their dispersion resins. One of these companies and another company have projected that they will be able to strip all their dispersion resins to 2000 ppm within the maximum time allowed for compliance under section 112. Based on information received from all companies that are known to make dispersion resins, it is EPA's judgment that those companies which are stripping or project they will be able to strip to 2000 ppm are the same ones which have devoted the most time and resources to development of stripping as a control measure for dispersion resin manufacture. EPA has therefore concluded that an emission limit requiring stripping to 2000 ppm does meet the second criterion for best control technology; i.e. it is a level of control which is generally adaptable for use in polyvinyl chloride dispersion manufacture within the maximum time allowed for compliance under section 112. Furthermore, this same degree of emission reduction can be achieved by add-on controls (e.g. incinerators). Although add-on controls are more expensive than stripping in terms of environmental, energy, and economic costs,

they do provide an optional method of control for the plants to use.

EPA considered proposing the standard to allow averaging of residual vinyl chloride concentrations in dispersion resins with those in other resins, so that a plant could compensate for higher levels in dispersion resins by stripping other resins to a lower level. This concept is judged to be inequitable because for some plants dispersion resins compose less than 5 percent of the total resin production and at other plants they compose 60 or more percent. EPA concluded that it would be more reasonable to recognize the significant differences between dispersion resins and other resins and require application of best available control technology to the processing of each.

8.2.3 Other Stack Emission Sources

The proposed standard limits emissions from all equipment used in the ethylene dichloride purification process and the vinyl chloride formation and purification processes in ethylene dichloride-vinyl chloride plants and from all reactors; strippers; containers for mixing, weighing and holding which precede the stripper; and monomer recovery systems in polyvinyl chloride plants to a concentration of 10 ppm vinyl chloride. The proposed standard also requires venting of captured fugitive emissions through a control system from which the concentration of vinyl chloride does not exceed 10 ppm. In EPA's judgment, an outlet concentration of 10 ppm represents best available control technology for these sources and can be achieved by incineration, carbon adsorption, or solvent absorption. None of these control systems has been used by ethylene dichloride-vinyl chloride or polyvinyl chloride plants until recently, and then by only a few plants. Therefore, even though EPA has made

a concentrated effort to obtain data on application of these control systems for reduction in vinyl chloride emissions, there are few data available demonstrating the effectiveness of these control systems when installed at ethylene dichloride-vinyl chloride or polyvinyl chloride plants. EPA did conduct a source test on one incinerator installed at an ethylene dichloride-vinyl chloride plant. The test demonstrated control to a level below the proposed limit of 10 ppm. One polyvinyl chloride producer has recently installed a carbon adsorption unit to control vinyl chloride emissions from the monomer recovery system and the blend tanks. During the time in which the unit has been operated, it has gone through more than 700 regenerating cycles, and the vinyl chloride content in the exit gas stream has been reported to be below 10 ppm. In addition, one vendor of activated carbon has submitted data from laboratory studies on the control of vinyl chloride by carbon adsorption. The vendor's conclusions from the studies, based on 15 cycles of operation, were that activated carbon readily adsorbs vinyl chloride in concentrations ranging from 50 ppm to over 300,000 ppm; 100 percent removal of vinyl chloride is technically feasible using dual beds of activated carbon; activated carbon saturated with vinyl chloride can be regenerated in-place using either steam or hot nitrogen to desorb the vinyl chloride; and no polymerization of vinyl chloride occurs on the bed. Data are available for a solvent absorption unit which controls emissions from the monomer recovery system in a polyvinyl

chloride plant to a concentration of 15 ppm; in EPA's judgment, however, this particular system, which is relatively old and was not designed specifically for vinyl chloride control, does not represent the full capability of solvent absorption in reducing vinyl chloride emissions. EPA believes, however, that an updated solvent absorption unit, as well as an incinerator or a carbon adsorption unit, will be capable of meeting the proposed standard.

The proposed standard limits, for polyvinyl chloride plants, the emissions from process equipment following the stripping operation in the manufacture of dispersion resins (except latex resins) to 0.2 kg/100 kg product and in the manufacture of all other resins (including latex resins) to 0.04 kg/100 kg product. One way in which these emission levels can be attained is by reducing the residual vinyl chloride monomer in dispersion resins to 2000 ppm or less and in all other resins to 400 ppm or less during the stripping operation. This reduction must be completed before the resins continue through the processing equipment following the stripper. This type of control is referred to as improved stripping technology. The proposed standard permits averaging of emissions to the extent that the vinyl chloride content in all grades of any one resin type completing the stripping operation at a plant site in one calendar day can be averaged over the 24 hour period. ["Resin type" refers to the broad classification of a resin according to the process by which it is manufactured (e.g. dispersion, suspension, bulk, latex, and solution). "Resin grade" is the subcategory of "resin type" which describes a resin as a unique resin, i.e. the most exact description of a resin with no further subdivision.] These emission levels can also be met by add-on control devices, such as

incinerators. EPA discourages use of the add-on control devices, however, because unlike improved stripping they do not result in a lower vinyl chloride content in the polyvinyl chloride resin going to fabricating plants. Furthermore, these devices are far more energy consuming for these particular emission sources than improved stripping technology and achieve no more emission control. In fact, these devices have not been used commercially to control the emissions from most of this particular process equipment, because they are much more expensive for the plants to use than improved stripping technology. In EPA's judgment, however, there is no technical reason why they could not be applied.

In developing the proposed standard for process equipment following the stripper, it was necessary for EPA to make decisions concerning the levels of control which should be required for the various resin types and the desirability of allowing averaging among resin grades. The reasons for selecting the emission limit which is proposed for these sources in the manufacture of dispersion resins have already been discussed. In regard to the manufacture of other resin types, as a result of the October 4, 1974, OSHA standard, polyvinyl chloride resin producers have been motivated to develop stripping technology to reduce further the vinyl chloride content in these resins during the stripping operation. By improving stripping technology, producers will not only reduce in-plant exposure levels as required but will also satisfy fabricator demand for resins which have low concentrations of vinyl chloride and thus do not cause the fabricators to be in violation of the OSHA standard. Some companies have devoted more time and resources to improve the effectiveness of

stripping as an emission control measure than have other companies. Optimum stripping consists of a set of operating conditions which must be developed experimentally on an individual basis for the many resins. Based on information supplied to EPA by individual companies which have devoted time and resources to develop improved stripping, EPA concluded that technology is currently available to strip the majority of resins, except dispersion resins, to 400 ppm or lower. This same degree of control is achievable through add-on control devices.

Some resins are more difficult to strip than other resins due to differences in characteristics such as porosity and heat sensitivity. Whereas current stripping technology can reduce the residual vinyl chloride content in the majority of the resins other than dispersion resins to below 400 ppm (and in some cases far below 400 ppm), it can reduce the vinyl chloride content in a few resins only to levels as high as 4000 ppm. EPA considered proposing a separate standard based on best available control technology for each of the different grades of resin. This could have conceivably been done based on theoretical factors. However, EPA concluded that it would be difficult, if not impossible, to do this, because the reductions that can be achieved depend on a given system and must be determined by actual measurements on a particular resin for a particular set of conditions. The large number of resin grades makes it impractical for EPA to conduct individual testing for each one. Available data indicate that most of the companies produce several grades of resin simultaneously and that when the

grades are averaged on a daily basis, the number of resins which can be stripped to lower than 400 ppm is sufficient to offset the few resins which cannot be. The proposed standard allows an averaging time of 24 hours because, if a plant were processing several grades simultaneously and one grade could not be stripped to 400 ppm, the total emissions from stripping all grades to an average of 400 ppm would be no greater than stripping each grade to 400 ppm. The alternative of increasing the averaging time to a week or month was rejected because this would permit higher peak emission levels than averaging on a 24-hour basis.

EPA considered proposing a standard which would require the emissions from slurry blend tanks and inprocess wastewater from equipment following the stripping operation to be controlled by add-on devices as well as by improved stripping technology. One relatively new plant decreased the gas volume of the exit stream from slurry blend tanks by replacing air with nitrogen and enclosing the tanks. A carbon adsorption unit was then installed to control emissions in the reduced gas volume. Although it has not been done by any plant in the industry, there is no technical reason why the inprocess wastewater from centrifuges which follow the stripper cannot be controlled by a water stripper. Such control systems were included in the economic analysis conducted by EPA. The analysis showed that, if plants used improved resin stripping (as opposed to add-on controls) to meet the proposed standard, the costs of these additional systems for slurry blend tanks and inprocess wastewater would be grossly disproportionate to the emission reduction achieved. Based on available information on

the emissions from slurry blend tanks after stripping has been used to reduce to 400 ppm the residual vinyl chloride content in the resin produced by an average plant, the addition of an add-on control device would further reduce emissions by approximately 0.5 kg/hr (1 lb/hr), i.e. the device would remove an additional 0.1 percent of the original uncontrolled emissions. Collecting the 0.5 kg/hr would increase the capital costs of control to an average plant by about 19 percent and the annual costs by about 13 percent. Similarly, the installation of an add-on control device in addition to improved stripping for the vinyl chloride in centrifuge water would reduce emissions by no more than the add-on control device for slurry blend tanks, and would increase the capital costs of control to an average plant by about 13 percent and the annual costs by 46 percent. The large increase in annual costs would be due to the large quantity of steam which would be required to remove the vinyl chloride from a large volume, low concentration water stream. Furthermore, if these additional controls were required, plants using add-on control technology would not be able to attain the same level of control as plants using improved stripping technology. The reason for this is that these plants would already be using add-on controls and installing additional add-on controls would have little, if any, effect.

The proposed standard limits the emissions of vinyl chloride from opening of reactors, reactor entry purge, venting inert gases from the reactor, and any other contact of the reactor contents with the ambient air, to 0.001 kg/100 kg product. One way the

standard may be attained is by a combination of (1) reducing the number of reactor openings by using high pressure water jets, solvent cleaning, or other means to prevent the need to hand-clean reactors and (2) displacing the vinyl chloride with water to a gasholder or recovery system before a reactor is opened. The level of the proposed standard is based on best available control technology as demonstrated by one plant, and there is no apparent reason why the same technology cannot be employed at other plants, except plants which produce bulk resins. This technology cannot be used for postpolymerization reactors in plants producing bulk resins for two reasons. First, the production of bulk resin is a dry process and water used to displace the vinyl chloride from the reactor before opening it would cause a contamination problem. Second, since the resin product is air conveyed from the postpolymerization reactor, the reactor is opened to the atmosphere after each batch. Manufacturers of bulk resins can achieve the level of the proposed standard by evacuating the reactor several times and breaking the vacuum with nitrogen. The number of evacuations would depend on the volume of gas in the reactor and the vacuum involved.

A zero emission limit is being proposed for relief discharges which can be prevented. In most cases, such discharges from reactors can be prevented by measures including, but not limited to,properly instrumenting the reactors to detect upset conditions, injecting chemicals to stop the polymerization reaction during upset conditions, venting the reactor contents to a gasholder during upset conditions and ultimately to a recovery system, providing employees with

improved training on preventing and handling upset conditions, and utilizing a stand-by source of power. For other pieces of equipment, increasing pressure due to inert gases in the system can be relieved by manual venting to a gasholder or recovery system. The conditions which lead to discharges can also be prevented in most cases by proper handling and transfer of vinyl chloride or materials containing vinyl chloride. Discharges which cannot be avoided by taking such preventive measures, such as those caused by natural disasters, will not be in violation of the proposed standard if the owner or operator notifies EPA within 10 days concerning the nature and cause of the discharge. This notification provision is necessary to permit EPA to investigate the surrounding conditions and determine whether the discharge could have been prevented. For the purposes of the proposed standard, operator error is considered to be preventable.

8.2.4 Fugitive Emission Sources

The proposed standard includes emission limits for all known sources of fugitive emissions and is intended to minimize these emissions to the maximum extent possible with available control technology. Some of the emission limits are numerically defined. Where it is infeasible to state numerical limits, the standard specifies equipment and procedural requirements.

All of the equipment and procedures specified for reducing fugitive emissions, such as removal of vinyl chloride from loading and unloading lines and process equipment before exposure to the atmosphere, displacement of the contents of a sampling flask back to the process during sampling, and capture and control of the emissions, have been used by

one or more ethylene dichloride-vinyl chloride or polyvinyl chloride plants and are described in plant responses to inquiries from EPA under the authority of section 114 of the Act.

For fugitive emissions, the proposed standard requires that the vinyl chloride concentration in process equipment greater than or equal to 5500 l (1250 gal) in volume (other than reactors) be reduced to 2 percent by volume at standard pressure and temperature before the equipment is opened to the atmosphere. This can be accomplished by vacuum pump or by displacement with water or inert gases. For process equipment that is smaller than 5500 l (1250 gal) in volume, the proposed standard requires that the amount of vinyl chloride in the equipment be reduced to 110 l (25 gal) at standard pressure and temperature before opening the equipment to the atmosphere. Any vinyl chloride removed from the equipment would have to be ducted through a control system.

A cut-off point which requires that the vinyl chloride be reduced by a greater percentage in the larger pieces of equipment than in the smaller ones was established based on the reasoning that follows. As shown in Tables 4-8 and 4-9 in Chapter 4, the emissions from opening the larger pieces of equipment would be much greater than from opening the smaller pieces, even with the standard in effect. Furthermore, the larger pieces of equipment are generally designed for purging with inert gases or pulling a vacuum whereas the smaller ones are not. That is, the larger pieces of equipment have short sections of pipe fitted with valves to which can be connected vacuum or purge lines. Also, in general

the larger pieces of equipment are already or could be readily equipped so that the vinyl chloride removed from the equipment can be ducted to a control system.

The smaller pieces of equipment include such things as pressure gauges, sections of pipe, pumps, and valves. For example, if there were no cut-off point, short sections of pipe fitted with valves would have to be installed in all sections of pipe which could possibly be opened. An extensive collection system would have to be installed to transfer the gases from each of the sections of pipe to a control system. Due to the large number of small pieces of equipment, the ductwork for transferring the gases from the equipment to a control system would be portable. This means that the ductwork would have to be disconnected frequently, and the standard would require that each time the ductwork were disconnected, the vinyl chloride concentration within it would have to be reduced beforehand. However, the standard would permit some vinyl chloride to remain in the ductwork before opening it to the atmosphere. Therefore, at the point where the volume of equipment is less than or equal to the volume of the ductwork, there is nothing to be gained by requiring that the vinyl chloride be removed from the piece of equipment before opening it.

Another consideration with regard to small equipment is that much of it is not designed to withstand a vacuum. One example would be pressure gauges.

In summary, a cut-off point has been established which is less stringent for smaller equipment in terms of percent vinyl chloride permitted to be emitted from the equipment because:

(1) The emissions from opening large equipment are much greater than from opening small equipment, even with the standard in effect.

(2) The smaller equipment is not designed to use a vacuum or purge system to remove the vinyl chloride, and in some cases it is not designed to withstand pressure.

(3) At some point the vinyl chloride emissions from disconnecting the extensive equipment needed to remove vinyl chloride from every section of pipe or other piece of small equipment and transfer it to a control system would be greater than the emissions from opening the section of pipe or other small equipment.

The proposed standard includes a more stringent limitation for emissions from opening of reactors than it does for opening of other equipment. The emission limit for opening of reactors (0.001 kg/100 kg product) has already been discussed. The reason for the more stringent limitation for reactors is that, unlike other equipment, the reactors are typically opened on a frequent and routine basis.

The same reasoning explains why the proposed standard includes a separate emission limit for emissions to the atmosphere from disconnecting equipment (hoses, couplings, valves, etc.) used in the transfer of vinyl chloride from storage to transport vessels at ethylene dichloride-vinyl chloride plants and from transport to storage vessels at polyvinyl chloride plants. Although the loading and unloading lines are relatively small in volume compared with some of the other equipment which can be

opened to the atmosphere, they are used and disconnected on a frequent and routine basis; i.e., several times per day. The proposed emission limit for each loading and unloading line requires that after each loading or unloading operation before opening any part of the line to the atmosphere, the quantity of vinyl chloride in all parts of the line that are to be opened is to be reduced to 4.4 l (1 gal), at standard temperature and pressure. Four and four tenths liters of vinyl chloride at standard temperature and pressure is equal to about 0.0098 kg (0.022 lb) of vinyl chloride.

The method for attaining the standard would depend on the volume of the equipment to be opened to the atmopshere. If an entire hose is to be disconnected and opened to the atmosphere, the hose could be evacuated. However, more commonly there would be a couple of valves between the hose and the storage (or transport) vessel with a coupling between the valves. In this case, if only the coupling were to be disconnected and opened to the atmosphere, the percent reduction in vinyl chloride required would depend on the volume of the coupling. If it were 4.4 l (1 gal) in volume, it would have to be reduced to 760 mm Hg and if it were 8.8 l (2 gal) in volume, it would have to be reduced to 380 mm Hg.

Also, during loading and unloading operations, the proposed standard would require that the emissions from the discharge end of slip gauges used to measure the vinyl chloride liquid level in transport and storage vessels be captured and ducted to a control system. Essentially, there would be no emissions from slip gauges.

Leaks from seals on rotary pumps can essentially be eliminated by using double mechanical seals or pumps with no seals, such as the type with magnet to magnet drive or a canned pump in which the eddy current passes through the pump fluid. Leaks from seals on reciprocating pumps can be minimized by double outboard seals. Double mechanical seals can be used on agitators and compressors to minimize leaks. The proposed standard includes equipment specifications requiring that these methods, or equivalent, be used to minimize leaks from seals on pumps, compressors, and agitators.

The proposed standard also includes equipment specifications requiring that leaks from relief valves be minimized by installing a rupture disk between each relief valve and the equipment served by the relief valve, or equivalent. An equivalent method of control would be to connect the discharge line from a relief valve to process equipment or to a recovery system. If a rupture disk were used as the method of control, there would be a potential problem if a leak should occur from the rupture disk and cause a build-up of pressure between the rupture disk and the relief valve. This is expected to occur infrequently because the reason for requiring the rupture disk is that it is less likely to leak than a relief valve. Although the proposed standard does not require any specific equipment or procedures to prevent the potential pressure build-up, there are several methods available for the plants to use to avoid this potential problem. These include (1) installing a pressure gauge between the disk and valve and routinely checking the pressure, and (2) installing a ball check excess

flow valve between the disk and the relief valve and routinely checking for any flow from the ball check excess flow valve.

The proposed standard would require capture and control of emissions of vinyl chloride bearing gases during manual venting from processing equipment. For example, it would permit no manual venting of vinyl chloride to the atmosphere to reduce the pressure in reactors during upset conditions or to remove inert gases from vessels used to store vinyl chloride. The gases would instead have to be transferred to a gasholder, a recovery system, another piece of equipment (such as another empty reactor), or to a control system.

The proposed standard minimizes vinyl chloride losses from sample flasks during sample acquisition by requiring that the sample be collected in a closed system. Vinyl chloride which could be lost to the atmosphere is instead flushed back to the process using this system.

The proposed standard requires development of and adherence to a formalized program for detection of leaks from equipment in vinyl chloride service and elimination of these leaks. The formalized program must include a multipoint vinyl chloride detector and portable hydrocarbon monitors. Rather than specifying the number of points to be monitored, the sensitivities of the multipoint detector, the vinyl chloride concentration that indicates a leak, and the actions to be taken to repair leaks, the proposed standard requires each plant owner or operator to prepare a program plan containing these specifications and to submit the plan to the Administrator for

approval. The plant owner or operator is at the same time required to submit data on background concentrations of vinyl chloride in different areas of the plant to use in determining the vinyl chloride concentration that should be designated as indicating a leak. Since the background concentrations vary among different areas of the plant, the definition of leak may also vary among different areas of the plant. EPA's decision on whether a program is adequate will be based on (1) the date the program will be implemented, (2) the characteristics of the multipoint detector and portable hydrocarbon detector (including the sensitivities of the instruments), (3) the number and location of points to be monitored in comparison with the number of pieces of equipment in vinyl chloride service and the size and physical lay-out of the plant, (4) the proposed frequency of monitoring, (5) the vinyl chloride concentration(s) designated as indicating a leak compared with the background concentrations of vinyl chloride in the plant, and (6) the other specifications contained in the program plan. This approach has been taken because the number of points which need to be monitored and the background concentrations of vinyl chloride vary depending on the size, configuration and age of a plant and, in the case of a polyvinyl chloride plant, on the number of reactors. Plans, therefore, must be tailored to the design of each individual plant. This approach gives each source the flexibility to develop a plan that it believes to be the most efficient.

The proposed standard includes an emission limit for inprocess wastewater which contains at least 10 ppm by weight vinyl chloride, measured directly as the wastewater stream leaves

the process equipment and before it is mixed with wastewater from any other source. This cut-off point was selected because, based on data which are available from polyvinyl chloride plants, it distinguishes between the low volume wastewater streams with high concentrations of vinyl chloride and the large volume wastewater streams with low concentrations of vinyl chloride. In effect, the proposed standard would require control of wastewater streams from pumps used in the monomer recovery system and from monomer recycle tanks where wastewater, which has been entrained with recovered monomer is separated and removed. It would also require control of wastewater which had been used, in accordance with other requirements of the proposed standard, to displace vinyl chloride in equipment before the equipment is opened. It would not require control of wastewater which had been used in the polymerization of vinyl chloride, if improved stripping technology were used to attain the proposed emission limit for the process equipment following the stripper. This wastewater stream was excluded because improved stripping technology indirectly reduces the vinyl chloride content of the wastewater as well as the resin before the wastewater is separated from the resin. However, if an add-on control device is used instead of improved stripping, the combination of all sources of vinyl chloride emissions following the stripping operation in the polyvinyl chloride plant, including inprocess wastewater, is required to meet the total mass emission limit. Thus, in this case, the concentration of vinyl chloride in the inprocess wastewater would not have to be

equal to or greater than the 10 ppm cut-off point to be required to be controlled.

The proposed standard of 10 ppm vinyl chloride in the wastewater can be attained by a stripper, which uses heat and/or vacuum to remove vinyl chloride from the water. The proposed standard in effect would require the vinyl chloride which is removed to be recovered by condensing it into a liquid or to be ducted through a control device. Theoretically, by using this method, the vinyl chloride concentration could be reduced to essentially zero. However, as the applied vacuum and heat are increased, the ratio of water to vinyl chloride that vaporizes increases. During the vinyl chloride recovery process, the water as well as the vinyl chloride condenses. Since the water still contains some dissolved vinyl chloride, it would have to be recirculated through the stripper. At some point, as the amount of water which is vaporized is increased, the separation of vinyl chloride from water would be less efficient. For these reasons, the proposed standard is 10 ppm. Although the standard permits some vinyl chloride to remain in the water, it is estimated that the vinyl chloride emissions from the low volume, high concentration water streams at the average plant would not exceed 0.5 kg/hr (1 lb/hr). At ethylene dichloride-vinyl chloride plants, strippers are already used as an inherent part of the process to recover ethylene dichloride from wastewater. Vinyl chloride is also removed from the wastewater. The purpose of the proposed standard is to ensure that the practice continues

and that any vinyl chloride removed from the wastewater is recovered or controlled.

8.3 Selection of the Format of the Proposed Standard

With the exception of emissions following the stripper in dispersion resin manufacture, separate standards have not been established for individual processes or companies. The applicability of carbon adsorption, incineration, or solvent absorption is not dependent on plant age, configuration or type of process.

The proposed standard specifies emission limitations for individual emission points. An alternative would have been to specify a total plant mass emission limit in terms of kg/hr. This is not possible, however, when using the best available control technology approach due to the different sizes and configurations of plants. Implementing best available control technology at different sizes of plants obviously results in different emissions per unit time. EPA also considered specifying the limits in terms of total plant mass emissions in kg vinyl chloride per kg product to be measured by material balance. This approach was rejected for several reasons. Due to the variations in configurations among plants, an emission factor, which would necessarily result in the application of best available control technology at each plant at all times, could not be developed. Furthermore, either long-term or short-term material balances would have to be used to measure compliance with such a standard. Long-term material balances have the disadvantage of a long averaging time so that short-term peak emissions are not detected. Short-term material balances, on the other hand, are impractical and

imprecise due to the large volumes of material which are handled and must be measured, the multiple pieces of equipment in which residual materials would have to be measured, and the large number of points where loss to the atmosphere, inprocess wastewater, and solid waste would have to be measured.

Numerical emission limits are used for each emission point where possible; however, equipment and operating procedures are specified for some of the fugitive emission sources from which emissions cannot be measured or calculated or for which it would be grossly impractical to do so. Generally, the reason that these emissions cannot be measured is that they are released into an unconfined area and often from many small sources, and there is no practical testing procedure for obtaining a reliable reading of emission levels. Where equipment or operating procedures are specified, plant owners or operators are generally permitted to use other equipment or procedures demonstrated to be of equivalent effectiveness. Primarily because fugitive emissions compose such a large proportion of the total emissions at ethylene dichloride-vinyl chloride and polyvinyl chloride plants, EPA has determined that control of such emissions by specification of equipment and operating procedures is preferable to the alternative of leaving such emissions unregulated.

For example, there are procedural requirements for the reduction of vinyl chloride to a specified concentration in equipment equal to or greater than 5500 l (1250 gal) before opening it to the atmosphere. Conceptually, EPA could have proposed the standard in terms of a mass emission rate. This could be done by converting the concentration of vinyl chloride to its mass emission equivalents for all sizes of

equipment. Mass emissions, however, could not be measured once the pieces of equipment were opened to the atmosphere because the emissions would not be confined. Consequently, if EPA had stated the standard in terms of a mass emission rate, it would have been necessary, in order to be meaningful, to state the method for determining compliance in terms of concentration of vinyl chloride, i.e., in the same terms as the procedural requirement is now stated. Stating the standard itself in terms of concentration is a much more direct approach and the only practical one. For equipment that is less than 5,500 l (1250 gal) and for loading and unloading equipment, a mass emission limit in terms of liters is proposed. However, this cannot be measured, but must be calculated based on the volume of the equipment and the pressure in the equipment.

The proposed standard includes equipment specifications for leaks from seals on pumps, compressors, and agitators and from relief valves. A numerical standard for emissions from these sources would be impractical to enforce since there is no way to test emissions released into an unconfined area. Even if a testing procedure were available, frequent routine testing of all pump, compressor, and agitator seals and relief valves to determine compliance would be burdensome.

The proposed standard requires that samples of vinyl chloride be collected in a closed system so that any vinyl chloride remaining in the sample flask from previous sampling flows back into the process. Any vinyl chloride flushed through the apparatus in an attempt to collect a representative sample also flows back into the process. Again, numerical emission limits cannot be specified because emissions are released into an unconfined space and cannot be measured. For

slip gauges and manual venting, the proposed standard requires that the emissions be captured and ducted through a control system. There is a numerical emission limit specified for the control system.

Another problem requiring special treatment is valve leakage. It would be impossible to avoid all valve leakage. However, valve leakage can be held close to zero if a system of regular valve monitoring is used to detect and repair leaks. If EPA were to specify a numerical limitation of zero, it would be impossible to meet at all times. If EPA were to specify a higher numerical limitation, it would permit more leakage than is necessary. This would be inconsistent with requiring control of vinyl chloride emissions to the level attainable by use of the best available control technology. Therefore, EPA is requiring use of a regular program for leak detection and repair.

In order to reduce the total emissions from reactors by limiting the frequency of openings, the proposed standard for reactor opening loss is specified in terms of a mass emission rate, i.e. kilograms of vinyl chloride per 100 kilograms of polyvinyl chloride produced. If a concentration standard were used, it would provide no incentive for reducing the frequency of reactor openings. Furthermore, the amount of dilution air which could be used to weaken the effect of a concentration standard is difficult to regulate. For these two reasons, EPA concluded that a mass emission rate would be the only effective way to specify the standard.

Due to the intermittent nature of the sources of the emissions, the proposed standard for control systems to which the captured

emissions are required to be ducted is in terms of concentration. A major part of the polyvinyl chloride plant is a batch operation which causes intermittent emissions of vinyl chloride. In addition, the fugitive emissions which are required to be captured and ducted to a control system in both ethylene dichloride-vinyl chloride and polyvinyl chloride plants occur only on an intermittent basis. Because of the fluctuating air volumes and mass emission rates, it would be difficult, if not impossible, on the basis of available information, to determine the allowable mass emission rates from these control systems.

The emission limit for the sources following the stripper in polyvinyl chloride plants is stated in two ways which are essentially equivalent in terms of the quantity of emissions they allow. The reason the emission limit is stated in two different ways is that there are two distinctively different ways to control these sources. Different methods of measurement and enforcement are applicable to the two different control methods. If add-on control devices are selected as the method of control, stack testing must be used to measure the emissions from all the multiple sources simultaneously for a minimum of an hour. If improved stripping is selected, the emissions could be measured in the same way. It is difficult, however, to use conventional source testing procedures to establish compliance because of the large number of sources that have to be tested. A typical polyvinyl chloride plant has several slurry blend tanks, centrifuges, dryers, and storage silos. Even if the emissions from each of these sources were determined, the resultant value would not necessarily

establish the total emissions since monomer would still be escaping from the resin in bagging operations, warehouses, and railroad tank cars.

Where improved stripping is used, there is a much more practical way for determining compliance. Improved stripping technology controls emissions by removing vinyl chloride from polyvinyl chloride resin before the resin moves through the remaining equipment in the process where the vinyl chloride would otherwise be emitted to the atmosphere. Therefore, the simplest way to determine total emissions is to measure the vinyl chloride in the resin as it leaves the stripper and before it is released to the atmosphere. Thus, if add-on control devices are used, the proposed standard is stated in terms of mass emissions to the atmosphere; if improved stripping is used, the proposed standard is stated in terms of the quantity of vinyl chloride in the polyvinyl chloride resin leaving the stripper. In both cases, the standard is stated in terms of a cumulative emission limit for all sources following the stripper to be consistent with the primary technology on which the standard is based (i.e. stripping).

Another reason the emission limit for sources following the stripper is stated in two ways is the necessity for two different averaging times. For reasons already explained, a 24-hour averaging time is desirable if improved stripping technology is selected as the means of control. Determination of emissions by measuring the vinyl chloride in stripped resin is amenable to this averaging time. If add-on controls are used, however, the 24-hour averaging time does

not have the same value. If only one emission limit were given, and it were stated in terms of allowable mass emissions with a 24-hour averaging time, any plants using add-on control devices to meet the proposed standard would have to test emissions from each stack for 24 hours instead of a minimum of one hour, as is required under the proposed standard. This would be unduly burdensome for these plants.

Stating the emission limits in two different ways potentially allows plants using add-on control devices to emit slightly more emissions than plants using improved stripping technology. The two emission limits are equivalent if it is assumed that all residual vinyl chloride in the resin leaving a stripper is emitted into the atmosphere at the polyvinyl chloride plant. In fact, however, a small proportion of the vinyl chloride might be left in the resin when it leaves the plant. The discrepancy between emissions allowed by the two emission limits could be avoided by proposing one standard based on emissions into the atmosphere. For plants using improved stripping, the method for determining compliance would be to measure the vinyl chloride in the resin leaving the stripping operation and in the same resin as it leaves the plant; the difference between these measurements would be emissions to the atmosphere between these two points. This method, however, creates enforcement problems, because the resin which is stripped in one batch is typically blended with stripped resin from other batches, and it would be difficult, if not impossible, to trace a batch all the way through the process. Complicating this problem would be the fact that the resin may be stored at the plant for

some time before it is shipped. For these two reasons, it would be difficult, if not impossible, to correlate measurements of resin leaving the stripper with those from resin leaving the plant, and EPA would therefore not be able to determine the emissions from any one batch. In addition to that, the concentrations of vinyl chloride in the resin, both in the stripper and in the product leaving the plant, would have to be averaged over a long time (more than the proposed 24 hours). The long averaging time would not be desirable because it would permit more emission peaks and it would be more cumbersome to enforce. EPA concluded, therefore, that the most practical and direct approach is to limit the concentration of vinyl chloride in the resin from the stripping operation. It should be pointed out that EPA has determined that this is an emission limitation; since residual vinyl chloride monomer left in the resin after stripping would be emitted into the atmosphere at some point, the limitation on residual vinyl chloride monomer in the resin limits emissions and is, therefore, an emission limitation; it is simply specified in a form which is compatible with the only practical method for determining compliance.

To simplify enforcement, the proposed standard for the inprocess wastewater is specified in terms of concentration of vinyl chloride rather than in mass emission limits. If it were specified in terms of mass emission limits, not only the vinyl chloride concentration but also the water flowrates from each of the pieces of process equipment would have to be measured. Due to the large number of pieces of equipment involved, this would not be practical.

8.4 Methods for Determining Compliance With the Proposed Standard

Provisions which specify the requirements for testing, reporting, and recordkeeping are included in the proposed standard. The purpose of these requirements is to determine compliance with the proposed standard.

8.4.1 Emission Tests

Test Method 106 is proposed as a reference method primarily for measuring vinyl chloride emissions from stacks. Portable hydrocarbon detectors or Method 106 can be used, except for postpolymerization reactors in the manufacture of bulk resins, to determine the degree to which vinyl chloride has been removed from equipment prior to opening the equipment to the atmosphere. For postpolymerization reactors in the manufacture of bulk resins, these test methods are not appropriate because the reactor would be partially filled with polyvinyl chloride resin at the time the vinyl chloride concentration within it would have to be tested. Therefore, the proposed standard includes provisions for calculating emissions due to opening of the postpolymerization reactors. Test Method 107 is proposed as a reference method for measuring the vinyl chloride content of polyvinyl chloride resin and inprocess wastewater. Multipoint vinyl chloride detectors and portable hydrocarbon detectors are proposed as methods for detecting leaks from process equipment. The proposed standard also includes a requirement that stack emissions be measured on a continuing basis with a vinyl chloride detector. This vinyl chloride detector may be the multipoint vinyl chloride detector required for leak detection, but does not have to be. Vinyl chloride

in the samples collected by the detector can be measured by gas chromatography, or if it is assumed that all hydrocarbons measured are vinyl chloride, by infrared spectrophotometry or flame ion detection. The proposed standard allows, upon approval by EPA, the use of equivalent or alternative test methods.

8.4.2 Reporting

There are reporting requirements in the general provisions of Part 61 of the Code of Federal Regulations which would apply to the sources subject to the vinyl chloride standard. In addition, there are several different kinds of reports required by the proposed standard.

Initial Report

First, an owner or operator must submit to EPA an initial written report containing a record of emissions from the sources from which emissions can be measured using Test Method 106. These sources include ethylene dichloride purification, vinyl chloride formation and purification, and the oxychlorination reactor in ethylene dichloride-vinyl chloride plants and reactors, strippers, monomer recovery systems, and mixing, weighing, and holding containers in polyvinyl chloride plants. Compliance with the emission limitations for reactor opening loss and the sources following the stripper in polyvinyl chloride plants must be demonstrated using appropriate test methods. Measurements of the vinyl chloride concentrations in the inprocess wastewater at both ethylene dichloride-vinyl chloride and polyvinyl chloride plants are also required as part of the initial emission testing.

For those sources which have emissions which cannot be measured (fugitive emission sources), an initial report is required

containing a written statement to the effect that certain pieces of equipment have been installed and are operating. These include equipment for minimizing leaks from seals on pumps, compressors, and agitators and from relief valves and equipment used for monitoring leaks. Also required is a written statement to the effect that certain procedures have been incorporated into a Standard Operating Procedure and are being implemented. These include such procedures as removing vinyl chloride from equipment and from loading and unloading lines before opening them to the atmosphere and venting the vinyl chloride removed from the equipment or lines to a control system, venting vinyl chloride from slip gauges during loading or unloading operations to a control system, ducting vinyl chloride emissions from manual venting to a control system, purging the vinyl chloride in each sample flask back to the process during vinyl chloride sampling, and detecting and repairing leaks.

Semi-Annual Report

A semi-annual report is required which is to contain a record of any emissions in excess of the proposed standard for the formation and purification processes in ethylene dichloride-vinyl chloride plants and the reactor, stripper, monomer recovery system, and containers used for mixing, weighing or holding preceding the stripper in polyvinyl chloride plants. These emissions must be measured by a vinyl chloride detector. The vinyl chloride detector reports measurements of vinyl chloride in terms of concentration. Except for the emission limit for the oxychlorination reactor, the emission limits for all the sources for which continuing

measurements of vinyl chloride with a detector are required are stated in terms of concentration. The emission limit for the oxychlorination reactor is stated in terms of mass per unit product. For the oxychlorination reactor, the vinyl chloride detector can be used to measure emissions at the same time that the initial stack test is being conducted using Test Method 106. The results of that test can then be used as a guideline in the future to determine whether the emissions measured on a continuing basis with the vinyl chloride detector are in excess of the standard.

For polyvinyl chloride plants, the semi-annual report is also required to contain measurements of emissions from reactor opening and, if improved stripping is selected as the control technology to attain the standard, from the sources following the stripper. Measurements of emissions from these two sources are required on a continuing basis because the control technologies required for these two sources are primarily procedures rather than control devices. Attainment of the standard for reactor opening would require a reduction in the number of reactor openings in addition to displacing the vinyl chloride from the reactor before opening. One emission test, made within 90 days of promulgation of the standard, would give no assurance that the standard was being met on a continuing basis. With regard to stripping, the primary limitations on the degree of stripping being carried out are product degradation and processing time as it affects production rate. The degree of stripping is more a function of operating parameters than of the specific

equipment being used. For this reason, even if all the equipment for stripping is installed and operated, routine measurements must be made to ensure that the degree of stripping required by the emission limitation is being carried out on a continuing basis.

For both reactor opening and improved stripping, it is possible that the relationship between the emissions measured and the corresponding operating procedures used to attain the emissions measured can be established. For improved stripping, for example, it may be established that for a given resin grade, a given set of operating conditions (temperature, residence time, and pressure) will result in a certain concentration of vinyl chloride in the resin which is far below the standard. Likewise, for reactor opening, it may be established that a given procedure such as water displacement coupled with a given frequency of reactor opening will result in an emission level below the standard. The general provisions and the proposed standard provide for waiver of emission tests and use of alternative or equivalent test methods. Under the authority of these provisions, EPA could, on an individual basis, permit a plant to record certain parameters (such as temperature, residence time, and pressure for improved stripping) rather than to conduct emission measurements.

Other Reporting

Any relief discharge must be reported within ten days of its occurrence. These reports will be used to determine compliance and will permit EPA to study the circumstances surrounding the discharge to determine whether the discharge could haave been prevented.

8.4.3 Recordkeeping

Each owner or operator is also required to keep records of certain information. It is EPA's intention to require little recordkeeping in addition to that which would normally be kept by the plants.

For example, the proposed standard would require keeping records of the concentrations of vinyl chloride measured by the vinyl chloride detector(s). Printouts from the vinyl chloride detector(s) are adequate to meet this requirement. Information on detection and repair of leaks is required to be kept in log books. The purpose of this recordkeeping is to document that the procedures detailed in the program for leak detection and elimination are being carried out. There is also a requirement for keeping records of the temperatures and pressures during reactor operation. Printouts from sensor instruments are adequate to meet this requirement. These records can be used by EPA to determine occurrence of a discharge from relief valves.

8.4.4 Other Methods for Determining Compliance

In addition to the requirements for tests, reports and recordkeeping, EPA has at any time the authority under section 114 of the Clean Air Act to require emission tests; inspect equipment, operation procedures, or records; or obtain other information as necessary to determine compliance with the standard. For example, an authorized representative of the Administrator of EPA may inspect the seals on pumps, inspect or observe the implementation of a Standard Operating Procedure for removing vinyl chloride from a piece of equipment before opening it, etc.

8.5 Evaluation of Need to Set Standards for Polyvinyl Chloride Particulate

There are two potential health problems related to exposure to polyvinyl chloride particulate. First, polyvinyl chloride particulate can be a source of vinyl chloride emissions. Second, studies of people occupationally exposed to polyvinyl chloride particulate and animals exposed experimentally to polyvinyl chloride particulate have indicated that the particulate may possibly cause pneumoconiosis.[2,3,4] Polyvinyl chloride and, to some extent, polyvinyl chloride fabricating plants are potential emitters of polyvinyl chloride particulate.

8.5.1 Polyvinyl Chloride Particulate as a Source of Vinyl Chloride Emissions

Vinyl chloride emissions due to polyvinyl chloride particulate would occur because the particulate contains residual vinyl chloride monomer. The amount of residual vinyl chloride in the particulate is dependent on the physical properties of the product being manufactured (size and porosity) and the degree to which residual vinyl chloride has been stripped from the product before it reaches the dryer and as it goes through the dryer. In the spring of 1974, based on data from several plants, the product resin was estimated to contain a maximum of 500 - 1,000 ppm vinyl chloride after it had gone through the dryer. The amount of residual vinyl chloride released from the particulate once it is in the environment has not been quantified.

Control techniques which are used to control polyvinyl chloride particulate are discussed in Chapter 4, section 4.11. Estimated polyvinyl chloride particulate emission rates from the various

processes in polyvinyl chloride plants using fabric filters and/or centrifugal separator control are shown in Chapter 4.

Based on these emission rates, the total polyvinyl chloride particulate emissions from a 136 million kg product/yr (300 million lb/yr) suspension plant containing storage bins, storage silos, bagging machines, bulk loading operations, and resin transfer points equipped with fabric filters, and rotary dryers equipped with centrifugal separators are estimated to be 211 kg/hr (465 lb/hr). (Due to the control equipment and plant size selected for this example, 211 kg/hr is estimated to represent a much higher than average emission rate.) Based on data obtained during the spring of 1974, it can be assumed, for the purpose of considering the worst situation without the proposed standard in effect, that this 211 kg particulate/hr contains 1,000 ppm residual vinyl chloride and that all the residual vinyl chloride is released into the atmosphere; therefore, the amount of vinyl chloride emissions from this source (the particulate) would be 0.21 kg/hr (0.46 lb/hr). This compares with the total vinyl chloride emission rate of approximately 32 kg/hr (70 lb/hr) from a 136 million kg product/yr (300 million lb product/yr) suspension polyvinyl chloride plant in compliance with the proposed standard.

Effect of the Proposed Standard on Vinyl Chloride Emissions from Polyvinyl Chloride Particulate

The proposed standard would indirectly reduce the potential problem which may be associated with emissions of residual vinyl chloride from the particulate through the control techniques (improved stripping or add-on controls) which would be used to

attain the proposed emission limit for the sources following the stripper (specifically, dryers and silos).

Particulate emissions in gas streams controlled by add-on control devices such as carbon adsorption would need to be removed prior to the device to ensure its proper operation. Add-on control devices such as incineration and absorption would be expected to remove essentially any particulate remaining in the gas stream subsequent to the particulate removal device. Thus, if add-on control devices are used, there will be essentially no particulate emissions from the dryers or silos, although there would still be emissions from the bagging machines, bulk loading, and resin transfer points. The maximum particulate emissions from the same 136 million kg product/yr suspension plant used as an example above but equipped with add-on control devices on the dryers and silos would be reduced from 211 kg/hr (465 lb/hr) to 9.5 kg/hr (31 lb/hr), and the maximum amount of residual vinyl chloride released from the particulate containing 1,000 ppm vinyl chloride would consequently be reduced from 0.21 kg/hr (0.46 lb/hr) to 0.01 kg/hr (0.03 lb/hr).

If improved stripping were used to meet the proposed emission limit for the dryers and silos, the quantity of residual vinyl chloride in the resin going into the dryer would be sharply reduced and the quantity of residual vinyl chloride monomer in the resin beyond the dryer would be reduced. However, since proportionately more residual vinyl chloride is removed in the dryer without improved stripping than with it, the reduction in the residual vinyl chloride

content of the polyvinyl chloride particulate due to improved stripping would be only from a maximum of about 500 - 1000 ppm to a maximum of 200 - 300 ppm. Using the 211 kg/hr (465 lb/hr) particulate emission rate from the same 136 million kg product/yr suspension plant, but with the reduced maximum residual monomer content (300 ppm instead of 1,000 ppm), the maximum quantity of residual vinyl chloride emitted from the particulate would be reduced from 0.21 kg/hr (0.46 lb/hr) to 0.06 kg/hr (0.14 lb/hr).

8.5.2 Need to Set a Standard for Polyvinyl Chloride Particulate

With regard to the potential problem of polyvinyl chloride particulate as a source of vinyl chloride emissions, EPA has determined that the indirect impact of the proposed standard on vinyl chloride emissions from the particulate makes direct regulation of the particulate unnecessary. As calculated in the previous section, for a 136 million kg product/yr suspension plant meeting the proposed standard, the maximum amount of vinyl chloride emissions from polyvinyl chloride particulate would be only 0.01 kg/hr (0.02 lb/hr) or 0.06 kg/hr (0.14 lb/hr), depending on the type of control technology selected. This emission rate is relatively insignificant when compared with the total emission rate from the plant (32 kg/hr or 70 lb/hr).

With regard to the potential problem of polyvinyl chloride particulate as a possible cause of pneumoconiosis, NIOSH is currently involved in experimental studies on the effects of the particulate on animals. The extent of public exposure (as opposed to occupational exposure) to ambient concentrations of the particulate is unknown

at this time. Ambient measurements of polyvinyl chloride particulate have not been made by EPA in the vicinity of industrial sources because no technology is currently available for separating polyvinyl chloride particulate from total suspended particulate. As data become available from NIOSH and other sources on the health effects of polyvinyl chloride particulate, EPA may find that it is necessary to reevaluate the need to propose standards for polyvinyl chloride particulate.

References

1. C. D. Callihan and E. McLaughlin, Vinyl Chloride Removed from Polyvinyl Chloride, Louisiana State University, Baton Rouge, Louisiana, February 1975.

2. B. Szende, et. al., "Pneumoconiosis Caused by the Inhalation of Polyvinyl Chloride Dust," Med. Lavoro, Vol. 61, n. 8-9, 1970, pp. 433-436.

3. Bogdan Cylivik, "Histological and Histochemical Changes Observed in Liver During Experimental Polyvinyl Chloride Pneumoconiosis," Rocz Akad Med Bialymstoku, Vol. 17, 1972, pp. 93-111.

4. Yu. I. Vertkin and Yu. R. Mamontov, "On the State of the Bronchopulmonary System in Workers Engaged in the Manufacture of Articles Made of Polyvinyl Chloride," Gigiyena Truda, Vol. 14, No. 10, 1970, pp. 29-32.

9. OTHER REGULATORY REQUIREMENTS DEVELOPED OR BEING DEVELOPED FOR VINYL CHLORIDE AND THEIR RELATIONSHIP TO THE PROPOSED STANDARD FOR VINYL CHLORIDE

9.1 Occupational Safety and Health Administration (OSHA)

9.1.1 The Emergency Temporary Standard

On January 22, 1974, OSHA was informed by the National Institute for Occupational Safety and Health (NIOSH) that the B. F. Goodrich Chemical Company had reported that deaths of several of its employees from angiosarcoma, a rare liver cancer, may have been occupationally related. After investigating this report, OSHA concluded that vinyl chloride was the causal agent of the angiosarcomas observed. Subsequently, additional angiosarcoma deaths were reported for workers who had been exposed to vinyl chloride in other plants. On April 5, 1974, based on all available information, OSHA promulgated (30 FR 12341) an emergency temporary standard for vinyl chloride. This standard reduced the permissible exposure level from 500 ppm to a 50 ppm ceiling and established other requirements, including monitoring and respiratory protection.

9.1.2 The Proposed Permanent Standard

On May 10, 1974, after reviewing additional information on carcinogenicity in animals exposed to 50 ppm vinyl chloride, OSHA proposed (39 FR 16896) a standard for vinyl chloride and polyvinyl chloride plants. The standard would have limited employee exposure to vinyl chloride to "no detectable level," as measured by a sampling and analytical method sensitive to 1 ppm, of an accuracy of 1 ppm $\pm$ 50 percent. Other requirements such as monitoring, protective clothing, regulated areas, and respiratory protection were also included in the proposal.

9.1.3 The Promulgated Permanent Standard

On October 4, 1974, after a series of hearings, economic and environmental impact studies, and formal comments, OSHA, under provisions of the Occupational Safety and Health Act of 1970 promulgated (39 FR 35890) a standard for vinyl chloride, polyvinyl chloride, and fabricating plants. The standard limits employee exposure to 1 ppm vinyl chloride (averaged over an eight-hour period) effective January 1, 1975. In addition, the regulation establishes a 5 ppm ceiling (averaged over a 15 minute period) in order to prevent exposure of employees to unacceptable high excursions. The standard allows for an action level of 0.5 ppm (averaged over an eight-hour period) in order to minimize the impact of the standard on plant owners and operators who have attained exposure levels well below the permissible limit. Thus, where the results of monitoring demonstrate that no employee is exposed to concentrations in excess of 0.5 ppm, plant owners or operators are in effect exempted from the provisions of the regulation. Further requirements include monitoring of employee exposure (monthly or quarterly depending upon criteria described in the regulation), designation of regulated areas, protective clothing, respiratory protection when the vinyl chloride level is not controlled to the permissible exposure limit, establishment of emergency procedures, warning signs, medical surveillance, employee training, employee medical recordkeeping, and reports on emergencies.

In order to comply with the standard, each plant as of January 1, 1975, was required to institute feasible engineering and work practice controls to reduce exposure levels below the permissible exposure limits.

Even if such controls would not reduce exposures below permissible levels, they nevertheless must be implemented to reduce exposures to the lowest practicable level and must be supplemented by the use of respirators to provide the necessary protection. A continuing program of increasing engineering and work practice controls is required until exposures are at or below the permissible exposure limits. A plan for achieving control by engineering and work practice methods must be drawn up and made available, upon request, to representatives of OSHA and NIOSH. The regulation, however, does not establish any deadlines for full compliance through engineering controls because OSHA was unable to determine when it would be feasible for most plants to reduce exposure levels to the permissible level.

9.1.4 Amendments and Corrections to the October 4, 1974 Regulation.

On December 5, 1974, OSHA published (39 FR 41848) corrections to the October 4, 1974 regulation and on December 30, 1974 OSHA amended (39 FR 45012) the October 4, 1974 regulation by requiring that respirators for employee protection contain end-of-service life indicators as of June 20, 1975.

The Society of Plastics Industry, Inc. (SPI) challenged the October 4, 1974, OSHA regulation in the U. S. Court of Appeals for the Second Circuit, The Society of Plastics Industry, Inc. v. Occupational Safety and Health Administration, 501 F. 2d 1301 (1975); cert. den. sub. nom. Firestone Plastics Co. v. U.S. Department of Labor, 43 U.S. Law Week 3623 (1975). SPI contended first, that available scientific and medical evidence does not establish that the 1 ppm

exposure level adopted by OSHA is required by health and safety considerations and, second, that meeting the 1 ppm is technologically and economically infeasible.

In its January 1975 decision, the Court unaminously upheld the standards established by OSHA and stated that they would go into effect in 60 days (about April 1, 1975). In response to SPI's first contention, the Court found the evidence regarding vinyl chloride's dangers "quite sufficient to warrant" OSHA's restrictions. Noting that much of the evidence was based on animal exposure to the chemical, with only indirect human evidence, the Court stated that, "nevertheless, it remains the duty of [OSHA] to act to protect the working man and to act even in circumstances where existing methodology or research is deficient." The Court labeled SPI's second claim as "exaggerated" and found OSHA's standards "clear, definite and certain ... entirely feasible, since the goal of the lowest detectable level can definitely be attained through the combination of technological means and respirators." According to the Court, the affected companies "simply need more faith in their own technological potentialities."

The Society of Plastics Industry, Inc. appealed the decision to the U.S. Supreme Court but, as noted in the citation above, the Court declined to review the case.

9.1.5 Relationship of the Proposed EPA Standard and the OSHA Regulation.

In response to the OSHA regulation, vinyl chloride companies have adopted some measures which not only reduce employee exposure, but also reduce emissions to the atmosphere. These measures have resulted in

some reduction of fugitive emissions and emission excursions. For example, at many of the plants, portable and fixed point monitoring systems have been employed to detect leaks and minimize one source of fugitive emissions. Improved sealing techniques and new pumps have been used in some plants. Nitrogen has been used to purge vinyl chloride from hoses used for product sampling and for transferring vinyl chloride between railroad cars and storage areas at some plants. Levels of vinyl chloride in railroad cars at some plants are now being measured by sonic and magnetic detectors to prevent exposure of car contents to the atmosphere. Some plants have reduced the number of entries into polyvinyl chloride reactors by utilizing jet water sprays and solvent cleaning. Many polyvinyl chloride plants are developing improved stripping both to reduce emissions at these plants and to satisfy the demands of fabricators for whom the most cost-effective approach for meeting the OSHA standard is to use a resin of minimal monomer content. Control devices, such as carbon adsorption, are also being installed in a few plants.

Other methods of reducing employee exposure to vinyl chloride, such as respiratory protection, ventilation of the work place, removing sides of buildings, and installation of tall stacks, do not, however, reduce emissions to the atmosphere. Even though the OSHA regulation requires all employees to institute feasible controls to the fullest extent possible and to continue to improve and apply engineering controls until full compliance is achieved, it does not set any deadlines for such compliance. Further, there is no deadline

for the required submittal of formal plans demonstrating how plants will achieve the standard. For these reasons, it is difficult to evaluate at this time the degree to which the OSHA regulation will reduce vinyl chloride emissions to the atmosphere. It is expected that the plants will respond to the OSHA regulation with a combination of ventilation techniques, emission reduction, and respiratory protection and that this response will not be uniform.

9.2 Environmental Protection Agency

9.2.1 Water Regulations

Although the vinyl chloride and polyvinyl chloride industries will have to meet other effluent guideline regulations for BOD, COD, TSS, and pH, there are at this time no plans for developing a water effluent regulation specifically for vinyl chloride. Vinyl chloride concentrations of 2-3 ppm and at times higher have been recorded from manufacturing plant effluents. However, due to the tendency of vinyl chloride to escape from water into the air, it is unlikely that such contamination would persist in downstream water which might be used for drinking purposes.[1]

Under the authority of the Safe Drinking Water Act of 1974, as amended, EPA has initiated studies of suspected carcinogens in drinking water. In an interim report to Congress, Preliminary Assessment of Suspected Carcinogens in Drinking Water, June 1974, EPA reported detections of vinyl chloride in surface water in Philadelphia, Pennsylvania and in ground water in Miami, Florida. Ethylene dichloride-vinyl chloride plants and polyvinyl chloride plants are not the source

of the detected vinyl chloride since there are no such plants in these two locations.

9.2.2 Pesticide Regulation

On April 26, 1974 and July 19, 1974, EPA published in the FEDERAL REGISTER (39 FR 14753 and 26480) an emergency suspension order for specific indoor aerosol pesticides containing vinyl chloride. These regulations have little, if any, relationship to the proposed standard. The amount of vinyl chloride used in all aerosol products was less than 0.1 percent of total vinyl chloride production (based on 1972 data). A ban on these products, therefore, has little effect on the production of vinyl chloride and, consequently, on the emissions of vinyl chloride at ethylene dichloride-vinyl chloride plants.

9.3 Department of Transportation

On July 23, 1974, the Coast Guard proposed in the FEDERAL REGISTER (39 FR 26752) amendments to the bulk dangerous cargoes regulations for the carriage of vinyl chloride monomer. As promulgated on April 16, 1974 (40 FR 17024), these amendments require venting, gauging, monitoring, and cargo transfer systems which provide greater protection to personnel than those previously permitted. The Coast Guard also promulgated, under appropriate emergency rulemaking provisions, amendments not proposed in July 1974, including establishment of regulated areas, use of respiratory protection by employees engaged in hazardous operations and use of warning signs. These amended regulations apply to all tank vessels, both existing and newly constructed, carrying vinyl chloride.

Currently, the Coast Guard is drafting a new proposal which would require permanently installed equipment for detection of vinyl chloride in cargo pump rooms and employee medical recordkeeping similar to the OSHA requirement.

Both the promulgated and the proposed amendments will have little, if any, impact on the proposed EPA standard.

9.4 Department of Health, Education, and Welfare

9.4.1 Food Packages

On May 17, 1973, the Food and Drug Administration (FDA) proposed (38 FR 12931) regulations which would eliminate polyvinyl chloride resins in packaging material for use in contact with alcoholic foods. The U.S. Department of the Treasury then withdrew its approval for the use of polyvinyl chloride plastic bottles for distilled alcoholic beverages. This made promulgation of the FDA regulations unnecessary.

On September 3, 1974, (40 FR 40529) FDA proposed regulations which would ban the use of vinyl chloride plastics in bottles, blister packs, boxes, and other semi-rigid and rigid packaging that comes in contact with food. The proposal would also prohibit vinyl chloride plastics in coatings applied to fresh citrus fruits to retain freshness. The proposed regulation would continue to permit vinyl chloride plastics in pliable (plasticized) film-type wraps, gaskets, cap liners, tubing, and package coatings which come in contact with food. FDA considered proposing a restriction on the use of vinyl chloride plastics in potable water pipes, but

decided not to because present evidence shows little likelihood that vinyl chloride migrates into the potable water from pipes being used to transport the water. Continued FDA approval for vinyl chloride use in water pipes, however, would be contingent upon additional confirmatory studies to be started within 60 days after promulgation of the proposed regulations.

9.4.2 Aerosol Products

On August 26, 1974, FDA promulgated (39 FR 30830) a regulation which banned any cosmetic aerosol product containing vinyl chloride. The same regulation classifies any aerosol drug product containing vinyl chloride as a new drug and requires that a new drug application be approved before the product is marketed. Since such a small percent of vinyl chloride was used for aerosol products, the regulation for cosmetic and drug aerosols has little impact on production capacity and, therefore, vinyl chloride emissions at vinyl chloride monomer plants.

9.5 Consumer Product Safety Commission

On August 21, 1974, the Consumer Product Safety Commission promulgated (39 FR 30112) regulations concerning household substances in self-pressurized containers having vinyl chloride monomer as an ingredient or in the propellant. The regulations classified such a substance as a "banned hazardous substance" as defined in the Federal Hazardous Substances Act. Again, since such a small percent of vinyl chloride production was involved, the regulation has little effect on vinyl chloride production and emissions.

9.6 State Regulations

In contacting the officials of several of the States where the majority of the ethylene dichloride-vinyl chloride and polyvinyl chloride plants are located (Texas, New Jersey, California, Illinois, Louisiana, Ohio, and Kentucky), it was learned that essentially no regulations exist specifically for the regulation of vinyl chloride. Some of the States do have regulations for hydrocarbons and new construction, however, which indirectly reduce vinyl chloride emissions at some plants.

For example, the States of New Jersey[2] and Texas[3] require that best control technology be employed to control any pollutant (including vinyl chloride) when a source is newly constructed or modified. The only plants presently required to comply with these regulations are three polyvinyl chloride plants in Texas which must employ what has been specified by the State as best control technology for each emission point, except the dryer. The dryer stack must be designed so that dispersion calculations indicate that the maximum exposure level is below 1 ppm. These three plants may have to install additional controls to meet the proposed EPA standard for vinyl chloride.

In granting permits for new construction, Louisiana[4] and Kentucky[5] use OSHA standards as guidelines for exposure of the general population to pollutants for which no EPA standard has been specified. The goal for ambient concentrations of vinyl chloride in both States is 0.05 ppm, or 5 percent of the OSHA standard.

In regard to hydrocarbon standards, most of the States have standards for photochemically reactive hydrocarbons and/or for ethylene. These include Texas and Louisiana where most of the ethylene dichloride-vinyl chloride plants are located. Texas can regulate existing ethylene dichloride-vinyl chloride and polyvinyl chloride plants through the State Implementation Plan hydrocarbon regulations if the plants emit more than 100 lb of ethylene/day; if they emit more than 100 lb of photochemically reactive hydrocarbons/day in a gas stream that is more than three volume percent; or if they emit more than 250 lb of photochemically reactive hydrocarbons/hr. If they emit more than 100 lb ethylene/day they must take some abatement action to reduce emissions. If they emit more than 100 lb of photochemically reactive hydrocarbons/day in a gas stream with more than three volume percent, or if they emit more than 250 lb of photochemically reactive hydrocarbons/hr, they must control the effluent streams with incineration. Ethylene dichloride-vinyl chloride and polyvinyl chloride plants apparently do not emit sufficient quantities of photochemically reactive hydrocarbons to be covered by these regulations. As a result of the ethylene regulation, however, three ethylene dichloride-vinyl chloride plants will be required to control their oxychlorination reactor emissions. Two of these plants, which plan to use incineration to control emissions from the oxychlorination reactor, will be reducing vinyl chloride as well as ethylene dichloride emissions. The third plant is planning to install an additional reactor which will allow more complete

reaction of ethylene and chlorine to ethylene dichloride. The effect of the additional reactor on vinyl chloride emissions is not known at this time.

Louisiana's emission limits for ethylene from the oxychlorination reactor can be achieved by incineration or the installation of an additional reactor. At this time, it is not certain which control measures will be applied by the plants, but the installation of an additional reactor is expected to be the favored option.

References

1. "EPA Urges Prompt Steps by Chemical Industry to Reduce Vinyl Chloride Air Emissions," Environmental News, EPA, Washington, D. C., June 11, 1974.

2. Telephone conversation between Susan Wyatt (EPA) and Mr. Tom Lennard, New Jersey Bureau of Air Pollution Control, Division of Environmental Quality, Department of Environmental Protection, Trenton, N. J., March 6, 1975.

3. Telephone conversation between Susan Wyatt (EPA) and Mr. Sam Crowthers, Texas Air Control Board, Austin, Texas, January 7 and February 21, 1975.

4. Telephone conversation between Susan Wyatt (EPA) and Mr. G. Von Bodunger, Air Control Section, Bureau of Environmental Health, LITSRA, New Orleans, Louisiana, January 8, 1975.

5. Telephone conversation between John Davis (EPA) and Mr. Murphy, Division of Air Pollution, Kentucky Department for Natural Resources and Environmental Protection, Frankfort, Kentucky, March 10, 1975.

Appendix A - EVOLUTION OF THE PROPOSED STANDARD

Date	Company, Consultant, or Agency	Nature of Action	Location
1/22/74	B. F. Goodrich Chemical	Reported to the National Institute of Occupational Safety and Health that several of its employees had died of angiosarcoma of the liver.	
2/14/74	EPA	Established a Task Force on Vinyl Chloride to identify the environmental problems resulting from the manufacture and use of vinyl chloride and polyvinyl chloride.	Washington, D.C.
5/74	EPA	Conducted an initial ambient monitoring study and measured the ambient levels of vinyl chloride around two vinyl chloride plants and ten polyvinyl chloride plants.	
5/9/74	Hooker Chemical	Plant Visit	Burlington, N.J.
5/16/74	OSHA	Discussion of Proposed Standard	Washington, D.C.
5/29/74	B. F. Goodrich Chemical	Plant Visit	Long Beach, Calif.
5/30/74	American Chemical	Plant Visit	Long Beach, Calif.
5/30/74	27 Companies(49 plants)	114 Request for Information	U.S.
6/10/74	Union Carbide	Discussion of Process	Durham, N.C.

Date	Company, Consultant, or Agency	Nature of Action	Location
6/11/74	Shell Chemical	Discussion of Process	Durham, N.C.
6/13/74	Tenneco	Discussion of Process	Durham, N.C.
6/14/74	Diamond Shamrock	Discussion of Process	Durham, N.C.
6/17/74	Dow Chemical	Discussion of Process	Durham, N.C.
6/18/74	B. F. Goodrich Chemical	Discussion of Process	Durham, N.C.
6/19/74	General Tire	Discussion of Process	Durham, N.C.
8/7/74	Houdry Division	Study of PVC and VCM	Philadelphia, Pa.
8/16/74	Conoco	Discussion of Process	Durham, N.C.
8/21/74	Firestone	Plant Visit	Pottstown, Pa.
8/22/74	Tenneco	Plant Visit	Burlington, N.J.
8/27/74	Calgon Corp.	Discussion of Carbon Absorption	Durham, N.C.
8/29/74	General Tire & Rubber Company	Plant Visit	Ashtabula, Ohio
9/4/74	LSU Consultants	Discussion of Stripping Study	Baton Rouge, La.
9/5/74	Houdry Division	VCM & PVC Study	Durham, N.C.
9/12/74	EPA	Administrator Train was briefed on OAWM's recommendation for regulating vinyl chloride under the Clean Air Act.	Washington, D.C.

Date	Company, Consultant or Agency	Nature of Action	Location
9/16/74	EPA	Administrator Train held a press conference and announced that the Agency will establish an air pollution emission standard for vinyl chloride.	Washington, D.C.
9/16/74	Tenneco Chemical	114 Request	3 plants
9/26/74	B. F. Goodrich	Visit to Corporate Headquarters	Cleveland, Ohio
10/1/74	General Tire	114 Request	Ashtabula, Ohio
10/7/74	Firestone	114 Request	Pottstown, Pa.
10/7/74	B. F. Goodrich	114 Request	All plants
10/7/74 10/8/74 10/9/74	American Chemical	Incinerator Test	Long Beach, Calif.
10/9/74	Shintech	Plant Visit	Freeport, Texas
10/9/74	Dow Chemical	Plant Visit	Freeport, Texas
10/23/74	Shell Chemical	Plant Visit	Deer Park, Texas
10/24/74	Conoco	Plant Visit	Oklahoma City, Ok.
10/30/74	Shintech	114 Request	Freeport, Texas
10/30/74	Dow	114 Request	Freeport, Texas
11/1/74	Diamond Shamrock	114 Request	Deer Park, Texas
11/1/74	Conoco	114 Request	2 plants

Date	Company, Consultant, or Agency	Nature of Action	Location
11/1/74	Shell	114 Request	2 plants
11/7/74	LSU Consultants	Stripper Study	Baton Rouge, La.
11/12/74	IGCI	Control Technique Cost	Durham, N.C.
11/14/74	Englehard	Catalytic Incineration	Durham, N.C.
11/14/74	EPA	EPA consulted the National Air Quality Criteria Advisory Committee regarding the determination and documentation of adverse effects on public health and welfare of vinyl chloride as an atmospheric pollutant.	Washington, D.C.
11/18/74	American Chemical	114 Request	Long Beach, Calif.
12/4/74	B. F. Goodrich	Plant Visit	Pedricktown, N.J.
12/9/74	LSU Consultants	Stripper Study	Durham, N.C.
12/10/74	B. F. Goodrich	Discussion of Process	Durham, N.C.
12/13/74	Dave Marsland	Study of Dryer Recycle	Durham, N.C.
12/13/74	EPA	EPA met with representatives of Federal Departments and Agencies to consult on the public health and welfare effects of vinyl chloride as an atmospheric pollutant.	Washington, D.C.

Date	Company, Consultant, or Agency	Nature of Action	Location
1/7/75	Air Products & Chemicals	Control Cost Discussion	Durham, N.C.
1/15/75	Union Carbide Carbon Division	Carbon Adsorption Discussion	Durham, N.C.
1/17/75	Dave Marsland	Results of Recycle Study	Durham, N.C.
2/5/75	Union Carbide	114 Request	2 plants
2/19/75	Vulcan Cincinnati	Carbon Adsorption Discussion	Durham, N.C.
2/25/75	Society of the Plastics Industry	Meeting with OAQPS	Durham, N.C.
3/3/75		Draft Document Sent to Working Group, NAPCTAC	Durham, N.C.
3/18/75		Working Group Meeting	Durham, N.C.
3/21/75	B. F. Goodrich	Plant Visit	Avon Lake, Ohio
3/25/75		NAPCTAC Meeting & Review	Washington, D. C.
4/7/75	Shell Chemical IGCI, Air Resources	Discussion of VCM Incineration	Durham, N.C.
4/14/75	Diamond Shamrock	Discussion of Dispersion Resins	Durham, N.C.
4/15/75	Tenneco Chemicals	Discussion of Dispersion Resins	Durham, N.C.
4/29/75	EPA	The status of the vinyl chloride regulations under the Clean Air Act was presented at the Administrators monthly status review.	

Date	Company, Consultant, or Agency	Nature of Action	Location
4/30/75	EPA	A similar status report was presented to the steering committee.	Washington, D.C.
5/19/75	Hooker Chemical	Discussion of Bulk Resins	Durham, N.C.
5/20/75	Society of the Plastics Industry	Draft Proposed Standard Discussion with OAQPS	Durham, N.C.
5/21/75	EPA	A meeting was held by the Steering Committee to resolve certain issues on the vinyl chloride regulation.	Washington, D.C.
6/16/75	EPA	Draft of the Action Memorandum distributed to the Steering Committee members for comment.	Washington, D.C.
6/17/75	Allied Chemical	Oxychlorination Vent Control	RTP, N.C.
6/26/75	Robintech	Oxyphotolysis of VCM	Durham, N.C.
7/2/75	EPA	Second draft of the Action Memorandum distributed to the Steering Committee	Washington, D.C.
7/7/75	B. F. Goodrich	New Plant Controls	Durham, N.C.
7/31/75	Rohm and Haas	Resin Adsorbents	Durham, N.C.
8/1/75		Draft regulation, preamble, and Action Memorandum transmitted to other Federal Agencies for review.	Washington, D.C.

Date	Company, Consultant, or Agency	Nature of Action	Location
9/18/75	Society of the Plastics Industry	Draft Proposed Standard Discussion with OAQPS	Durham, N.C.
10/6/75	Federal Agencies	Met with OMB and the Federal Agencies (HEW, DOL, and DOC) to discuss their comments on the draft proposed standards package	Washington, D.C.

APPENDIX B

INDEX TO ENVIRONMENTAL IMPACT CONSIDERATIONS

This appendix consists of a reference system, cross-indexed, with the October 21, 1974, FEDERAL REGISTER (39 FR 37419) containing the Agency guidelines concerning the preparation of Environmental Impact Statements. This index can be used to identify sections of the document which contain data and information germane to any portion of the FEDERAL REGISTER guidelines.

CROSS-INDEXED REFERENCE SYSTEM TO HIGHLIGHT
ENVIRONMENTAL IMPACT PORTIONS OF THE DOCUMENT

Agency Guidelines for Preparing Regulatory Action Environmental Impact Statements (39 FR 37419)	Location Within the Standards Support and Environmental Impact Document
1. Background and description of the proposed action.	
-Describe the recommended or proposed action and its purpose.	The proposed standard and its purpose is summarized in Chapter 1, section 1.1. The statutory basis for the proposed standard (section 112 of the Clean Air Act) is described in the Preface. A detailed discussion of the purpose of the proposed standard is contained in Chapter 2, section 2.3 and the proposed standard is outlined in detail in Chapter 8.
	The industries and the emission sources within each industry covered by the proposed standard are listed in Chapter 1, and a detailed description of these industries and emission sources is contained in Chapter 3. The control technologies which can be applied to reduce vinyl chloride emissions in the ethylene dichloride-vinyl chloride and polyvinyl chloride plants and the emission reductions which have been achieved by these control technologies are described in detail in Chapter 4.
	The health effects of vinyl chloride are briefly summarized in Chapter 2, section 2.2.1.1 and discussed fully in the Scientific and Technical Assessment Report on Vinyl Chloride and Polyvinyl Chloride, which is being distributed concurrently with this document.

-The relationship to other actions and proposals significantly affected by the proposed action shall be discussed, including not only other Agency activities but also those of other governmental and private organizations.

2. Alternatives to the proposed action.

-Describe and objectively weigh reasonable alternatives to the proposed action, to the extent such alternatives are permitted by the law. . . For use as a reference point to which other actions can be compared, the analysis of alternatives should include the alternative of taking no action, or of postponing action. In addition, the analysis should include alternatives having different environmental impacts, including proposing standards, criteria, procedures, or actions of varying degrees of stringency. When appropriate, actions with similar environmental impacts but based on different technical approaches should be discussed. This analysis shall evaluate alternatives in such a manner that reviewers can judge their relative desirability.

Other regulations for vinyl chloride and their relationships to the proposed standard are described in Chapter 9. Other EPA regulations and to the extent possible, the OSHA regulations, which apply to the affected industries are included in the study of economic impact in Chapter 7.

The several categories of alternatives to the proposed action which were considered are listed below.

a. Alternative regulatory approaches. The alternative approaches to that of regulating vinyl chloride under section 112 of the Clean Air Act and their advantages and disadvantages are outlined in Chapter 2, section 2.2. These alternatives include no action, postponed action, regulating under section 115 (Abatement Conferences), regulating under section 303 (Emergency Powers), regulating under section 109 (National Ambient Air Quality Standards for Vinyl Chloride or National Ambient Air Quality Standards for Non-methane Hydrocarbons), and regulating under section 111 (Standards of Performance for New Sources).

The alternative approaches for regulating vinyl chloride under section 112 and the advantages and disadvantages of each are discussed in Chapter 2, section 2.3. These include basing the standard on a threshold level of effects, basing the standard on best available control technology, and prohibiting all emissions of vinyl chloride. The alternative industries which could be selected for regulation are described in Chapter 2, section 2.4, the alternative emission sources within these industries which could be selected for regulation are discussed in Chapter 5, and other pollutants which were considered for regulation are discussed in Chapter 8, section 8.5.

b. Alternative levels of control. The alternative levels of control which could be required by the proposed standard and the reasons for selecting these particular alternatives are outlined in Chapter 5. These alternatives include a less stringent standard, the proposed standard, and a more stringent standard.

-The analysis should be sufficiently detailed to reveal the Agency's comparative evaluation of the beneficial and adverse environmental, health, social, and economic effects of the proposed action and each reasonable alternative.

c. Alternative technical approaches. The alternative technical approaches include (1) alternative formats for the standard (e.g., ppm vs kg/unit product) which are discussed in Chapter 8, section 8.3, (2) alternative enforcement procedures which are discussed in Chapter 8, section 8.4, (3) alternative control technologies which could be applied to reduce emissions which are described in Chapter 4, and (4) alternative formats for the test method which are described in Appendix D.

a. A discussion of the Agency's comparative evaluation of the various alternative regulatory approaches for vinyl chloride can be found in Chapter 2, sections 2.2 and 2.3.

b. A summary of the beneficial and adverse environmental, health, social, and economic effects of the alternative levels of control and some of the alternative regulatory approaches can be found in Chapter 1, sections 1.2 and 1.3. A more detailed description of the environmental impacts of each alternative control level can be found in Chapter 6. A detailed description of the economic impacts of each alternative control level, including the capital and annualized costs to the industry, can be found in Chapter 7. The socio-economic impacts of the alternative control levels, including potential plant closures and maximum price increases in consumer products, can also be found in Chapter 7. A discussion of the Agency's comparative evaluation of these impacts in selecting one of the alternative levels of control as the proposed standard is contained in Chapter 8, section 8.2.

It should be noted that the Agency's comparative evaluation of the environmental, health, social and economic impacts of some of the alternative regulatory approaches, such as prohibiting all vinyl chloride emissions (and in effect banning the industries), proposing no standard, and delaying proposal of standards can be found in Chapter 2, section 2.3.1.

c. The Agency's comparative evaluation of the alternative technical approaches is included in the same chapters where these approaches are identified.

-Where the authorizing legislation limits the Agency from taking certain factors into account in its decision making, the comparative evaluation should discuss all relevant factors, but clearly identify those factors which the authorizing legislation requires to be the basis of the decision making.

The factors which the authorizing legislation requires to be the basis of the decision making are identified in Chapter 2, section 2.2.6.

-In addition, the reasons why the proposed action is believed by the Agency to be the best course of action shall be explained.

a. The reasons why the regulatory alternative (section 112 of the Act) was selected for the proposed action are explained in Chapter 2, section 2.2.6. The reasons for the selection of the alternative regulatory approach (best available control technology) under section 112 are stated in Chapter 2, section 2.3.

The reasons for proposing the standard to cover only some of the industries which emit vinyl chloride are contained in Chapter 2, section 2.4. The rationale for covering all emission points in these industries is stated in Chapter 5. The reasons for not requiring control of polyvinyl chloride particulate are discussed in Chapter 8, section 8.5.

b. The reasons for selecting the level of the proposed standard are explained in Chapter 8, section 8.2. This explanation includes the rationale for selecting the emission limits for each of the sources within the industries.

c. The reasons for selecting the format of the proposed standard are stated in Chapter 8, section 8.3, the reasons for requiring certain methods for determining compliance with the proposed standard are given in Chapter 8, section 8.4, and the reasons for selecting the formats of the test methods are discussed in Appendix D.

3. Environmental impact of the proposed action.

A. Primary impact

Primary impacts are those that can be attributed directly to the action, such as reduced levels of specific pollutants brought about by a new standard and the physical changes that occur in the various media with this reduction.

The primary impact of the alternative control levels, including the proposed action, in terms of reduced mass emissions is outlined in Chapter 6, section 6.2.1.1 and in terms of reduced ambient concentrations is outlined in Chapter 6, section 6.2.1.2. Possible transformations of the pollutant in ambient air are discussed in section 6.2.1.3.

B. Secondary impact

Secondary impacts are indirect or induced impacts. For example, mandatory reduction of specific pollutants brought about by a new standard could result in the adoption of control technology that exacerbates another pollution problem and would be a secondary impact.

The secondary impact of the individual control systems which can be used to meet the proposed standard are identified qualitatively in Chapter 6, section 6.1.

The secondary air impacts of the alternative control levels, including the proposed standard, are quantified in terms of mass emission rates in Chapter 6, section 6.2.2.1.1, in terms of ambient air concentrations in Chapter 6, section 6.2.2.1.2 and in terms of health effects, Chapter 6, section 6.2.2.1. Technology available to minimize the secondary air impacts and its cost is discussed in Chapter 6, section 6.2.2.1.3.

The secondary water impacts of the alternative control levels, including the proposed standard, are quantified in Chapter 6, section 6.2.2.2. The technologies available to minimize the secondary water impacts and their costs are also discussed in Chapter 6, section 6.2.2.2. The secondary solid waste impact of the alternative control levels, including the proposed standard, is quantified in Chapter 6, section 6.2.2.3.

The energy consumption impact of the alternative control levels, including the proposed standard, is quantified in Chapter 6, section 6.2.2.5.

Both the primary and secondary impacts of the proposed standard are summarized in Chapter 1, section 1.2.

4. Other considerations.

A. Adverse impacts which cannot be avoided should the proposal be implemented. Describe the kinds and magnitudes of adverse impacts which cannot be reduced in severity to an acceptable level or which can be reduced to an acceptable level but not eliminated. These may include air or water pollution, damage to ecological systems, reduction in economic activities, threats to health, or undesirable land use patterns. Remedial, protective, and mitigative measures which will be taken as part of the proposed action shall be identified.

A summary of the potential adverse environmental,health, social and economic impacts of the proposed standard and a discussion of the significance of each impact can be found in Chapter 1, section 1.2.2.Factors which already exist to eliminate some of the potential adverse impacts are identified. Those adverse impacts which cannot be avoided are also identified, along with any steps which can be taken to minimize them.

B. Relationship between local short-term uses of man's environment and the maintenance and enhancement of long-term productivity. Describe the extent to which the proposed action involves trade-offs between short-term environmental gains at the expense of long-term losses or vice versa and the extent to which the proposed action forecloses future options. Special attention shall be given to effects which pose long-term risks to health or safety. In addition, the timing of the proposed action shall be explained and justified.

The relationship between local short-term uses of man's environment and the maintenance and enhancement of long-term productivity is discussed in Chapter 1, section 1.2.3.

C. Irreversible and irretrievable commitments of resources which would be involved in the proposed action should it be implemented. Describe the extent to which the proposed action curtails the diversity and range of beneficial uses of the environment. For example, irreversible damage can result if a standard is not sufficiently stringent.

Irreversible and irretrievable resources which would be involved in the proposed action are discussed in Chapter 1, section 1.2.4.

APPENDIX C

EMISSION SOURCE TEST DATA

The EPA conducted one source test of vinyl chloride emissions before and after an incinerator-scrubber. A summary of the results is presented in Table 1.

TABLE 1. VC(VINYL CHLORIDE) CONCENTRATIONS BEFORE AND AFTER INCINERATOR-SCRUBBER FOR EPA TESTS

		Incinerator Inlet			Incinerator Outlet/Scrubber Inlet					Scrubber Outlet				
Run No.	Date Sampled	NM^3/hr (1)	VC,%	VC, kg/hr	NM^3/hr (1)	VC,PPM	$\%O_2$	VC,PPM @10%O_2	VC, kg/hr	NM^3/hr (1)	VC,PPM	$\%O_2$	VC,PPM @10%O_2	VC kg/hr
1	10/7/74	37.4	4.26	4.27	4411	<0.5	10.7	<0.5	<0.005	4411	34.7	10.5	36.4	0.398
2	10/8/74	41.2	26.4	31.3	4394	1.95	10.2	1.99	0.022	4394	24.3	10.2	24.8	0.278
3	10/8/74	39.5	17.5	18.5	4394	1.4	9.79	1.4	0.016	4394	34.7	9.79	34.0	0.396
4	10/8/74	25.1	8.71	5.86	4394	15.0	9.96	14.9	0.171	4394	35.2	10.3	36.2	0.402
5	10/9/74	77.4	1.33	2.77	6315	1.6	10.2	1.6	0.026	6315	0.6	10.2	0.6	0.010
6	10/9/74	101	2.43	6.57	6315	2.7	10.2	2.8	0.044	6315	6.4	10.2	6.5	0.105

(1) Dry normal cubic meters per hour at 21.1°C and 760 mm Hg

APPENDIX D - EMISSION MONITORING AND COMPLIANCE TESTING TECHNIQUES AND COSTS

D.1 Emission Monitoring.

No emission monitoring instrumentation, data acquisition, and data processing equipment for measuring vinyl chloride (VC) from stack gases that are readily available (on an "as complete systems" basis) have been determined. However, according to the VCM and PVC Producers Group of the Society of the Plastics Industry, Inc. ("Comments on EPA's Proposed Standard for Vinyl Chloride," NAPTAC Meeting, March 25-26, 1975), "approximately 75% of the industry has already ordered or installed fixed multipoint work-area vinyl chloride monitors. The types in use range from a simple organic vapor analyzer via flame ionization detector where only VCM is likely to be present, to infrared spectrophotometers and automatic chromatographs where other organics are present in addition to vinyl chloride." If multiple sampling point gas chromatograph/flame ionization detector (GC/FID) systems for monitoring of the plant environment are available, then these systems could be adapted to include monitoring of the stack gases. The cost associated with site preparation, sample conditioning and handling systems, data processing and handling systems, and routine maintenance and repair is not known.

D.2 Compliance Testing.

D.2.1 Stack Testing

For stack sampling purposes, VC must be assumed to exist in conjunction with other hydrocarbons, both chlorinated and otherwise.

Accordingly, methods for VC analysis consist of first separating the VC from other hydrocarbons, followed by measuring the quantity of VC with a flame ionization detector. However, between various groups concerned with measuring VC, non-uniformity in procedures was found to exist in the following areas: (1) sample collection, (2) introduction of sample to gas chromatograph, (3) chromatographic column and associated operating parameters, and (4) chromatograph calibration.

Two of the approaches for VC sample collection were one that involved an evacuated flask for grab samples and another that used tubes containing activated charcoal for an integrated sample. Since emission concentration may vary considerably during a relatively short period of time, the integrated sample approach offered a greater advantage over the grab sample approach because emission fluctuations due to process variations would be automatically averaged. In addition, the integrated approach minimizes the number of samples that need to be analyzed. Upon investigating the activated charcoal sampling tubes, it was found that they were basically designed for sampling ambient concentration levels of VC. Since source effluent concentrations are expected to be higher (particularly since other hydrocarbons will be present) there was the uncertainty involved with predicting sample breakthrough, or when the sample should be terminated. It was also recognized that bag samples would offer the potential for the best precision, since no intermediate sample recovery step would be involved.

In view of the above considerations, it was decided that collection of the integrated sample in Tedlar bags might be the better alternative. To check the flexibility of this approach, a study of VC stability, or deterioration in Tedlar bags in the presence of various process-associated gases was undertaken.[1] The study showed no significant deterioration of VC over a period of 48 hours. Consequently the integrated bag technique was deemed suitable; however, anyone preferring to use activated charcoal tubes has this option, provided that efficiency at least equal to the bag technique can be demonstrated.

A collected gas sample can be introduced to a gas chromatograph either through use of a gas-tight syringe or an automated sample loop. The latter approach was selected since it has less possibility of leakage and provides a more reproducible sample volume.

Several columns are mentioned in the literature as being suitable for the separation of VC from other gases; most notable among them have been Carbopak A[2] and Chromosorb 102.[3] Carbopak A is the more sensitive of the two; however, the VC elution time is not as great as with the Chromosorb 102. For this reason Chromosorb 102 was selected for further study. A program was undertaken to establish whether various hydrocarbons that were known to be associated with VC in stack emissions interfered with the VC peak from the Chromosorb column. The study revealed no such problems.[4] Furthermore, analysis of actual source samples of the peak reported as VC with this column by two qualitative techniques, spectroscopy and electron capture, indicated the peak was only VC.[5] It should be noted that selection of Chromosorb 102 does not mean that Carbopak A or some other column(s) may not work equally well.

Calibration has been accomplished by two techniques, the most common being the dilution of 99+% VC with nitrogen into a series of lower concentrations in Tedlar bags. The second technique utilizes a set of cylinder standards. Both techniques have been found to produce acceptable results[5] and are included in the reference method.

Based on the study of VC stability in Tedlar bags, possible interferences by various process associated gases, and calibration methods, and as a result of a field study and tests conducted at a source of vinyl chloride, Method 106 was prepared for determining compliance with new source performance standards. This method is the same as used for the data gathering process for setting the standards, except that leak tests for the flexible bags and refined calibration procedures to insure accuracy, precision, and reliability are specified.

Assuming that the test location is near the analytical laboratory and that sample collection and analytical equipment is on hand, the cost of field collection, laboratory analysis, and reporting of VC emissions from a single stack is estimated to be $2500 to $3500 at $25.00/man-hour for a compliance test effort. While this figure would be reduced approximately 50% per stack if several stacks are tested, it does presume that all VC samples would be collected and analyzed in triplicate.

If the plant has established in-house capabilities and were to conduct their own tests and/or do their own analyses, the cost per man-hour could be less.

D.2.2 Water, Slurry, Resin, Wet Coke, and Latex Testing

As EPA has no direct experience with measuring residual vinyl chloride (RVC) in anything other than water, Method 107 was largely adapted from a PVC manufacturer's method. While the headspace technique is relatively new, the depth of confirmatory information supplied to EPA for this method, such as column retention times for various potential interferences and the interlaboratory analytical reproducibility data, coupled with the enhanced analysis capabilities of the automated headspace technique, are most favorable. However, it is recognized that some analysts may still prefer the solution technique, and it is expected that equivalency of the solution technique can be readily demonstrated.

REFERENCES

1. "Evaluation of a Collection and Analytical Procedure for Vinyl Chloride in Air," by G. D. Clayton and Associates. December 13, 1974. EPA Contract No. 68-02-1408, Task Order No. 2. EPA Report No. 75-VCL-1.

2. "Vinyl Chloride Monitoring Near the B. F. Goodrich Chemical Company in Louisville, Kentucky." Region IV, U. S. Environmental Protection Agency, Surveillance and Analysis Division, Athens, Georgia. June 24, 1974.

3. "The Evaluation of Airborne Concentrations of Vinyl Chloride," Richard R. Keenan, G. D. Clayton & Associates, 1974.

4. Same as 1

5. EPA Report No. 75-VCL-2.

TECHNICAL REPORT DATA
(Please read Instructions on the reverse before completing)

1. REPORT NO. EPA-450/2-75-009	2.	3. RECIPIENT'S ACCESSION NO.
4. TITLE AND SUBTITLE Standard Support and Environmental Impact Statement - Emission Standard for Vinyl Chloride		5. REPORT DATE October 1975
		6. PERFORMING ORGANIZATION CODE
7. AUTHOR(S)		8. PERFORMING ORGANIZATION REPORT NO.
9. PERFORMING ORGANIZATION NAME AND ADDRESS U. S. Environmental Protection Agency Office of Air Quality Planning and Standards Research Triangle Park, N. C. 27711		10. PROGRAM ELEMENT NO.
		11. CONTRACT/GRANT NO.
12. SPONSORING AGENCY NAME AND ADDRESS		13. TYPE OF REPORT AND PERIOD COVERED
		14. SPONSORING AGENCY CODE

15. SUPPLEMENTARY NOTES

16. ABSTRACT

A national emission standard for vinyl chloride emitted from ethylene dichloride-vinyl chloride and polyvinyl chloride plants is being proposed under the authority of section 112 of the Clean Air Act. Vinyl Chloride has been implicated as the causal agent of angiosarcoma and other serious disorders, both carcinogenic and noncarcinogenic, in people with occupational exposure and in animals with experimental exposure to vinyl chloride. Reasonable extrapolations from these findings cause concern that vinyl chloride may cause or contribute to the same or similar disorders at present ambient air levels. The purpose of the proposed standard is to minimize vinyl chloride emissions from all known process and fugitive emission sources in ethylene dichloride-vinyl chloride and polyvinyl chloride plants to the level attainable with best available control technology. This would have the effect of furthering the protection of public health by minimizing the health risks to the people living in the vicinity of these plants and to any additional people who are exposed as a result of new construction. This is estimated to have the effect of reducing emissions from a typical ethylene dichloride-vinyl chloride plant by approximately 94 percent and from a typical polyvinyl chloride plant by approximately 95 percent. Environmental Impact and Inflation Impact Statements quantifying the impacts of the proposed standard and alternative control levels are included in the document.

17. KEY WORDS AND DOCUMENT ANALYSIS

a. DESCRIPTORS	b. IDENTIFIERS/OPEN ENDED TERMS	c. COSATI Field/Group
Air pollution Pollution control Hazardous pollutants Emission standards Vinyl chloride Vinyl chloride plants Polyvinyl chloride plants Ethylene-dichloride plants	Air pollution control	

18. DISTRIBUTION STATEMENT Unlimited	19. SECURITY CLASS *(This Report)* Unclassified	21. NO. OF PAGES 536
	20. SECURITY CLASS *(This page)* Unclassified	22. PRICE

EPA Form 2220-1 (9-73)