EPA-130/6-79-001
July , 1979

ENVIRONMENTAL IMPACT

ASSESSMENT GUIDELINES

for New Source Fossil Fueled Steam Electric Generating Stations

EPA Task Officer: John W. Meagher

Office of Environmental Review
U.S. Environmental Protection Agency
Washington, D.C. 20460

Preface

This document is one of a series of industry specific Environmental Impact Assessment Guidelines being developed by the Office of Environmental Review of use in EPA's Environmental Impact Statement preparation program on New Source NPDES permits. It to be used in conjunction with Environmental Impact Assessment Guidelines for Selected New Source Industries, on OFA publication that includes a description of impacts common to most industrial new sources.

The requirement for federal agencies to assess the environmental impacts of their proposed actions is included in Section 102 of the National Environmental Policy Act of 1969 (NEPA), as amended. The stipulation that EPA's issuance of a New Source NPDES permit is an action subject to NEPA is in Section 511(c)(1) of the Clean Water Act of 1977. EPA's regulations for preparation of Environmental Impact Statements are in Part 6 of Title 40 of the Code of Federal Regulations; the EIA requirement is described in Section 6.908.

NOTICE

In accordance with the CEQ regulations for implementing NEPA (40 CFR 1500-1508), EPA has modified its terminology for its NEPA program. The document referred to in these guidelines as Environmental Impact Assessment (EIA) is now called an Environmental Information Document (EID).

CONTENTS

Page

List of Figures vii

List of Tables vii

INTRODUCTION 1

I. OVERVIEW OF THE INDUSTRY 3

I.A. Subcategorization 3
I.A.1. Fossil Fuel Types 3
I.A.1.a. Coal 3
I.A.1.b. Oil 3
I.A.1.c. Gas 3
I.A.2. Off-Site Associated Facilities 4

I.B. Trends 4
I.B.1. The Demand for Power 4
I.B.2. Locational Changes 6
I.B.3. Raw Materials 6
I.B.4. Processes 9
I.B.5. Pollution Control 11
I.B.6. Environmental Impact 11

I.C. Significant Environmental Problems 12
I.C.1. Location 12
I.C.2. Raw Materials 12
I.C.3. Processes 13
I.C.4. Pollution Control 14

I.D. Regulations 14
I.D.1. Air Pollution Performance Standards 15
I.D.2. Water Pollution Standards of Performance . . . 20
I.D.3. State Power Plant Siting Laws 22

II. IMPACT IDENTIFICATION 25

II.A. Site Preparation and Facility Construction 25

II.B. Raw Materials Handling 25
II.B.1. Coal 25
II.B.1.a. Terrestrial Impacts 31
II.B.1.b. Aquatic Impacts 33
II.B.2. Oil and Gas 34

Page

II.C. Processes and Associated Waste Streams 34
II.C.1. Continuous Aqueous Waste Streams 36
II.C.1.a. Heat Dissipation Systems 36
II.C.1.b. Water Treatment Systems 42
II.C.1.c. Boiler Blowdown 43
II.C.1.d. Ash Handling Water 43
II.C.1.e. Stack Gas Scrubber System 43
II.C.1.f. Miscellaneous Waste Streams 45
II.C.2. Intermittent Aqueous Waste Streams 45
II.C.3. Air Emissions Waste Streams 45
II.C.3.a. Sources of Emissions 47
II.C.3.b. Measurements of Air Emissions 48
II.C.3.c. Atmospheric Chemistry 50

II.D. Other Impacts 52
II.D.1. Electric Power Transmission Systems 52
II.D.1.a. Data Requirements (Description of the Proposed Transmission Facility) . 53
II.D.1.b. Environmental Impact Considerations . 54
II.D.2. Transportation Impacts 59
II.D.2.a. Railroads 60
II.D.2.b. Barges and Ships 61
II.D.2.c. Slurry Pipelines 62
II.D.2.d. Trucks 63

II.E. Modeling of Impacts 64
II.E.1. Air Quality Modeling 64
II.E.2. Cooling Water Discharge Models 68
II.E.2.a. General Types of Models 68
II.E.2.b. Modeling Difficulties 71
II.E.2.c. Modeling Techniques 71
II.E.2.d. Recent Studies 73
II.E.2.e. Recommended Models 74

III. POLLUTION CONTROL 76

III.A. Standards of Performance Technology: In-Process Controls, Water, Air, Solid Wastes 76
III.A.1. Water Treatment Wastes 76
III.A.2. Ash-Handling Water 76
III.A.3. Coal Pile Runoff 77
III.A.4. Stack Flue Gas Scrubber Systems 77
III.A.5. Cooling Tower Blowdown 77
III.A.6. Miscellaneous Waste Streams 77
III.A.7. Air Emission Abatement Systems 77
III.A.8. Solid Wastes 77

III.B. Standards of Performance Technology: End-of-Process Controls, Water Streams 77
III.B.1. Chemical Pollutants 77

Page

III.B.2. Heat 78
III.B.2.a. Mechanical Draft Evaporating Cooling Towers 79
III.B.2.b. Natural Draft Evaporating Cooling Towers 79
III.B.2.c. Dry Cooling Towers 79
III.B.2.d. Hybrid Cooling Towers 80
III.B.2.e. Cooling Lakes and Cooling Ponds . . . 80
III.B.2.f. Spray Ponds and Canals 80

III.C. Standards of Performance Technology: End-of-Process Controls, Air 80
III.C.1. Particulate (Fly Ash) Control 81
III.C.1.a. Electrostatic Precipitators 81
III.C.1.b. Wet Scrubbers 82
III.C.2. SO_x Control 83
III.C.2.a. Low-Sulfur Coal 83
III.C.2.b. Coal Beneficiation. 84
III.C.2.c. Flue-Gas Desulfurization 84
III.C.2.d. Coal Beneficiation Combined with Flue-Gas Desulfurization 85
III.C.2.e. Intermittent Control Systems 86
III.C.3. Nitrogen Oxide (NO_x) Control 86

III.D. State of the Art Technology: End-of-Process Controls, Solid Waste Disposal 87

IV. OTHER CONTROLLABLE IMPACTS 92

IV.A. Aesthetics 92

IV.B. Noise 93
IV.B.1. Existing Noise Levels 93
IV.B.2. Construction Noise Impacts 94
IV.B.3. Operation Noise Impacts 94

IV.C. Socioeconomics 95

IV.D. Energy Supply 96

IV.E. Impact Areas not Specific to Fossil-Fueled Steam Electric Generating Stations 97

V. EVALUATION OF AVAILABLE ALTERNATIVES 98

V.A. No-Build Alternative 98
V.A.1. Projecting the Demand for Power 98
V.A.2. The Relationship of Demand for Power to Present and Planned Generating Capactiy 100
V.A.3. Impacts of Not Constructing Facilities 103

V.B. Site Alternatives 104

V.C. Process Alternatives 107
V.C.1. Alternative Generating Modes 107
V.C.2. Alternative Facility Designs 108
V.C.2.a. Fuel Type 109
V.C.2.b. Thermodynamic Cycle 109
V.C.2.c. Cooling Systems 109
V.C.2.d. Cooling Water Intake Structure . . 112
V.C.2.e. Cooling Water Discharge Structure . 112
V.C.2.f. Chemical Waste Streams 112
V.C.2.g. Fouling Control System 112
V.C.2.h. Sanitary Waste System 112
V.C.2.i. Solid Waste Handling and Disposal System 113
V.C.2.j. Stack Emission Control System . . . 113

VI. REGULATIONS OTHER THAN POLLUTION CONTROL 114

BIBLIOGRAPHY

Environmental Impact Assessment: General 120

Air Emissions, Associated Impacts, and Control Technologies 122

Effects of Air Emissions on Biota 126

Effects of Air Emissions on Human Health 129

Aquatic Biota: Impact Assessment 130

Solid Waste Generation, Associated Impacts, and Control Technologies 132

Modeling of Impacts: Thermal Plumes; Air Quality 133

Electric Power Transmission Lines 137

Assessment of Transportation-Related Impacts 142

Raw Material Handling, Associated Impacts, and Control Technologies 143

Noise Generation, Associated Impacts, and Control Technologies 144

List of Figures

Number Page

1. Largest fossil-fueled steam electric turbine generators in service, 1900-1990 10

2. Fossil-fueled steam electric power plant: Typical flow diagram for a 1,000-MW plant 35

3. Effect of temperature profile on plume rise and diffusion 65

4. Matrix of recommended mathematical prediction models . . 69

5. Need for power: Analytical framework 99

List of Tables

Number

1. Historical growth: Summer peak load and total electric demand, 1960-1975 5

2. Electricity consumption (Btu x 10^{15}) and compound annual rates of growth (%), 1960-2000 7

3. Ranges of chemical constituents of representative U.S. coals 8

4. Applicable Federal ambient air quality standards 16

5. Nondeterioration increments 19

6. State siting laws 23

7. Outline of potential environmental impacts and relevant pollutants resulting from site preparation and construction practices 26

8. Coal pile drainage water: Analyses from nine plants . . 32

9. Ash pond overflow water: Change in contaminant concentration 44

10. Raw waste flows and loadings: Maintenance cleaning . . . 46

11. Estimated emission of toxic metals from conventional power plants 49

List of Tables (Continued)

Number Page

12. Major chemical constituents of coal 89

13. Trace element constituents of coal 90

14. Factors affecting the demand for electricity 101

15. Load and capability forecast 102

16. Typical permits, licenses, certifications, and approvals for construction and operation of typical electric generating facility 116

INTRODUCTION

The Clean Water Act requires that EPA establish standards of performance for categories of new source industrial wastewater dischargers. Before the discharge of any pollutant to the navigable waters of the United States from a new source in an industrial category for which performance standards have been proposed, a new source National Pollutant Discharge Elimination System (NPDES) permit must be obtained from either EPA or the State (whichever is the administering authority for the State in which the discharge is proposed). The Clean Water Act also requires that the issuance of a permit by EPA for a new source discharge be subject to the National Environmental Policy Act (NEPA), which may require preparation of an Environmental Impact Statement (EIS) on the new source. The procedure established by EPA regulations (40 CFR 6 Subpart I) for applying NEPA to the issuance of new source NPDES permits may require preparation of an Environmental Impact Assessment (EIA) by the permit applicant. Each EIA is submitted to EPA and reviewed to determine if there are potentially significant effects on the quality of the human environment resulting from construction and operation of the new source. If there are, EPA publishes an EIS on the action of issuing the permit.

The purpose of these guidelines is to provide industry specific guidance to EPA personnel responsible for determining the scope and content of EIA's and for reviewing them after submission to EPA. It is to serve as supplementary information to EPA's previously published document, Environmental Impact Assessment Guidelines for Selected New Source Industries, which includes the general format for an EIA and those impact assessment considerations common to all or most industries. Both that document and these guidelines should be used for development of an EIA for a new source fossil fueled steam electric generating station.

These guidelines provide the reader with an indication of the nature of the potential impacts on the environment and the surrounding region from construction and operation of fossil fueled steam electric generating stations. In this capacity, the volume is intended to assist EPA personnel in the identification of those impact areas that should be addressed in an EIA. In addition, the guidelines present (in Chapter I) a description of the industry, its principal processes, environmental problems, and recent trends in location, raw materials, processes, pollution control and demand for industry output. This "Overview of the Industry" is included to familiarize EPA staff with existing conditions in the industry.

Although this document may be transmitted to an applicant for informational purposes, it should not be construed as representing the procedural requirements for obtaining an NPDES permit, for complying with Sections 316(a) and 316(b) of the Clean Water Act, or as representing the applicant's total responsibilities relating to the new source EIS program. In addition, the content of an EIA for a specific new source application is determined by EPA in accordance with Section 6.908(b) of Title 40 of the Code of Federal Regulations and this document does not supersede any directive received by the applicant from EPA's official responsible for implementing that regulation.

The appendix is divided into six sections. Section I is the "Overview of the Industry", described above. Section II, "Impact Identification", discusses process-related wastes and the impacts that may occur during construction and operation of the facility. Section III, "Pollution Control", describes the technology for controlling environmental impacts. Section IV discusses other impacts that can be mitigated through design considerations and proper site and facility planning. Section V, "Evaluation of Alternatives", discusses the consideration and impact assessment of possible alternatives to the proposed action. Section VI describes regulations other than pollution control that apply to the industry.

I. OVERVIEW OF THE INDUSTRY

I.A. SUBCATEGORIZATION

From the standpoint of new source effluent guidelines, the fossil-fueled steam electric power generating station category is not further subcategorized. For environmental impact, however, projects may be subcategorized by fuel type and in terms of associated off-site facilities.

I.A.1. Fossil Fuel Types

In 1973, 81 percent of all electrical power generation was from burning of fossil fuels. The sections that follow discuss the use (in percent) and associated problems of the various fossil fuels.

I.A.1.a. Coal. Coal is the most common fuel encountered and its use has the widest range of potential environmental impact. In 1973, coal accounted for 55 percent of the fossil fuel used in power plants; this percentage is expected to increase because, although the use of coal presents relatively greater environmental problems, it is more abundant than other fuels, less costly, and the evolving Federal energy policy emphasizes the increased use of coal. Principal environmental concerns associated with the use of coal include:

- Usurpation of land required for coal storage and the treatment and disposal of contaminated runoff from these areas
- Particulate and gaseous air contaminants from the burning of coal
- Disposal of large volumes of ashes and flue gas scrubber wastes
- Water, air, and noise pollution resulting from transport and handling of coal and disposal of ash.

I.A.1.b. Oil. Fuel oil accounted for 22 percent of the fossil fuel used in power plants in 1973; however, energy policies are expected to discourage its use. Generally the use of oil presents fewer air emission and ash generation problems than the burning of coal. Materials handling problems are related primarily to spills and leaks and can be significant, depending on the quantity and location of the discharge.

I.A.1.c. Gas. Natural gas accounted for 23 percent of the fossil fuel used in conventional power plants in 1973. This percentage is expected to drop markedly because of scarcity. Gas use eliminates particulate air pollutants and its low sulfur content results in considerable reduction in gaseous pollutants. Materials handling impacts also are less than for other fossil fuel types.

I.A.2. Off-Site Associated Facilities

Off-site facilities that are necessary for the operation of the power plant and, therefore, must be considered in terms of their potential environmental impact, include:

- Construction of new or upgraded power line transmission facilities to connect a new plant to existing power networks
- Construction and operation of a railroad spur to connect the plant with an existing rail line
- Installation of barging or shipping facilities.

The impact of any off-site disposal of waste products, such as ashes, must be considered. If the coal arrives at the plant via slurry pipe lines, the construction and operation-related impacts of the line also should be assessed (sedimentation, aesthetics, disposal of transport water). Potential impacts associated with the mining of coal are covered under other industrial categories and, therefore, will be the subject of separate guideline documents.

I.B. TRENDS

I.B.1. The Demand for Power

Since 1974, a series of events has introduced considerable uncertainty into planning in the electric utility industry. Higher fuel prices have led to higher rates. This factor and the slowdown in the economy have caused a reduction in the rate of growth of the consumption of electricity. Thus, uncertainty surrounds the demand for electricity. At the same time, the length of time taken to construct new generating units and the rate of inflation have increased. Thus, uncertainty surrounds the cost at which electricity can be supplied. These trends, in both demand and supply, have created financing problems for the industry, whose rate increases to consumers have tended to lag behind industry cost increases. Industry has experienced difficulties in raising capital and in maintaining an adequate cash flow. As a result, some electrical generating units that were planned have been cancelled or deferred. Simple extrapolations of the trends of the 1960's and the early 1970's are now seen as increasingly inappropriate in projecting the demand for (and supply of) electricity. Consequently, earlier projections are under review and revision by the utility industry and by Federal and State agencies (both regulatory and planning) and are being reviewed and questioned by other organizations in the private sector, including consulting firms, study teams in universities, and consumer-advocacy groups.

Table 1 presents historical rates of growth in energy consumption in the United States: 7.5 percent per annum over the period 1960-1970, slightly

Table 1. Historical growth:
Summer peak load and total electric demand, 1960-1975

Year	Noncoincident summer peak load			Delivered total electric utility industry		
	Thousand MW	Percent increase	Compound growth rate	Billion kWh	Percent increase	Compound growth rate
1960	132.8			683.2		
1961	141.0	6.17		720.7	5.49	
1962	149.1	5.17		776.1	7.69	
1963	159.5	6.98		830.8	7.05	
1964	175.0	9.75		890.4	7.17	
1965	186.3	6.46		953.4	7.08	
1966	203.4	9.15		1,039.0	8.98	
1967	213.5	4.97		1,107.0	6.54	
1968	238.0	11.50		1,202.3	8.61	
1969	257.7	8.26		1,307.2	8.72	
1970	274.7	6.60		1,391.4	6.44	
1971	292.1	6.35		1,466.4	5.39	
1972	319.2	9.26		1,577.7	7.59	
1973	343.9	7.75		1,703.2	7.95	
1974	349.3	1.56		1,700.8	-0.14	
1975	356.2	2.00		1,734.0*	2.00*	
1960-1970		106.85	7.5		103.66	7.4
1970-1974		27.16	6.2		22.24	5.2
1973-1975		3.45	1.8		1.8	1.0

*Estimated.

Source: Federal Energy Administration. 1976. 1976 National energy outlook. Washington DC.

negative in 1974, and an estimated 2 percent in 1975. Table 2 presents projected rates of growth. Consumption rates range from 4.8 to 6.4 percent over the period 1974-1985. The Energy Policy Project of the Ford Foundation, however, projects rates ranging from 2.20 to 5.72 percent over the period 1975-2000.

I.B.2. Locational Changes

Improvements in the facilities for the transmission of electrical power, in the form of higher voltage lines with less power loss, have reduced the need to locate power plants in the immediate vicinity of load centers. Future improvements will continue this trend, with the possible use of DC power transmission. Location near a suitable source of water is now and will continue to be a major consideration, along with proximity to fuel supplies and access to suitable transportation networks. A power plant using the steam cycle must dissipate at least 60 percent of its heat because of thermodynamic limitations on cycle efficiency, and this heat is dissipated to water. With once-through cooling, 15-20 Btu can be dissipated per pound of water withdrawn from the waterbody, but if cooling towers or lakes are used, the value can be increased to several hundred Btu per pound of water withdrawn and a much smaller source of water can be used.

Locational trends for new power plants also show that they increasingly are being built in rural areas. Coordinated public opposition to siting facilities near high density, high pollutant urban areas acts as an important factor in encouraging siting in rural areas.

I.B.3. Raw Materials

The trend in raw materials (i.e., fuels), as outlined in recent Federal energy proposals, is toward coal and away from oil and gas because of the scarcity of the latter two fuels. The current trend is toward low-sulfur, western coal to reduce air pollution problems; however, the increased interest in SO_2 scrubbing equipment will make possible the use of higher sulfur coals in the future, as implied in recent energy proposals, as well as the New Stationary Source Performance Standards which require a percentage reduction of emissions regardless of quality of coal used.

The environmental problems associated with coal primarily are attributed to its impurities. Table 3 shows the range of analytical results for a representative group of eastern, midwestern (Illinois), and western coals. Volatile organic compounds ranged from 19 to 53 percent, sulfur ranged from 0.4 to over 6 percent, and various trace metals were present in wide ranging quantities. Most of the organic materials are consumed during combustion, but some organics and all of the inorganic materials enter the environment through one of the following routes:

Table 2. Electricity consumption (Btu x 10^{15}) and compound annual rates of growth (%), 1960-2000

Year	Consumption (Btu x 10^{15}), by data source				Compound annual rate of growth (%), by data source												
	1	2	3	4	5	6	7	8	9	10	10	10	10	10	10	10	10
1960	NA			8.18													
1970	NA			16.32													
1974	NA			20.00													
1975	21.08	21.08	21.08	NA													
1980	NA			26.65													
1985	40.74	29.20	28.32	33.34													
1990	NA			42.41													
2000	84.72	41.51	36.30	NA													
1960-1970								7.2									
1970-1974								5.2									
1974-1985								4.8	5.4	4.4	6.4	5.6	5.5	6.0	5.1	5.0	5.8
1974-1990					6.81	3.33	3.00										
1975-1990																	
1975-2000					5.72	2.75	2.20										

NA = Not Available.

Sources:

1, 2, and 3 are from Energy Policy Project (EPP) of the Ford Foundation A Time to Choose. America's Energy Future. Ballinger. Cambridge, MA. 1974. Appendix F: Historical Growth Path.

4, 9, and 10 are from Federal Energy Administration. 1976. 1976 National Energy Outlook, Washington, DC, February. Table V-2.

5, 6, 7, and 8 are calculated from columns 1, 2, 3, and 4, respectively.

Table 3. Ranges of chemical constituents of representative U.S. coals

Item	Range (%)	Item	Range (ppm)
Major constituents:		Trace elements:	
C	55.2 -80.1	As	0.5 - 93.0
H	4.0 - 5.8	B	5.0 -224.0
N	0.8 - 1.8	Be	0.2 - 4.0
O	4.2 -16.0	Br	4.0 - 52.0
Major characteristics:		Cd	0.1 - 65.0
Air dry loss	1.4 -16.7	Co	1.0 - 43.0
Moisture	0.1 -20.7	Cr	4.0 - 54.0
Volatility	18.9 -52.7	Cu	5.0 - 61.0
C, fixed	34.6 -65.4	F	25.0 -143.0
Ash	2.2 -25.8	Ga	1.1 - 7.5
Minor constituents:		Ge	1.0 - 43.0
Al	0.42- 3.0	Hg	0.02- 1.6
Ca	0.05- 2.7	Mn	6.0 -181.0
Cl	0.01- 0.5	Mo	1.0 - 30.0
Fe	0.3 - 4.3	Ni	3.0 - 80.0
K	0.02- 0.4	P	5.0 -400.0
Mg	0.01- 0.2	Pb	4.0 -218.0
Na	0.00- 0.2	Sb	0.2 - 8.9
Si	0.58- 6.1	Se	0.4 - 7.7
Ti	0.02- 0.2	Sn	1.0 - 51.0
S, organic	0.3 - 3.1	V	11.0 - 78.0
S, pyritic	0.06- 3.8	Zn	6.0 -535.0
S, SO_4	0.01- 1.1	Zr	8.0 -133.0
S, total	0.4 - 6.5		
S, X-ray	0.5 - 5.4		

*The physical and chemical characteristics of coal are not uniform within or between coal producing regions. Therefore the applicant should develop seam-specific data to be used as inputs for accurate prediction of the potential effluents from the combustion process in the proposed plant, given a specific coal as the fuel.

Source: Ruch, R. R., H. J. Gluskoter, and N. F. Shimp. February 1974. Occurrence and distribution of potentially volatile trace elements in coal. EPA-650/2-74/054. Illinois State Geological Survey.

- Runoff water from coal piles
- Particulate or gaseous emissions from stacks
- Ash disposal

Some elements appeared in groups (Table 3); that is, when one was higher in concentration, the others in the group similarly were higher. The groups were:

- Zinc (Zn), cadmium (Cd)
- Arsenic (As), cobalt (Co), copper (Cu), nickel (Ni), lead (Pb), antimony (Sb)
- Potassium (K), titanium (Ti), aluminum (Al), silicon (Si)
- Manganese (Mn), calcium (Ca)
- Sodium (Na), chlorine (Cl)

Germanium (Ge), beryllium (Be), and boron (B) are likely to be associated with the organic part of the coal, whereas mercury (Hg), zirconium (Zr), Zn, As, Cd, Pb, Mn, and molybdenum (Mo), are likely to be associated with the inorganic part of the coal.

Oil usually contains much lower amounts of inorganic impurities, although some oils contain significant quantities of sulfur and considerably more vanadium is found in some oils than in coal. Other trace elements, such as arsenic, molybdenum, selenium, and zinc may be present in significant quantities.

I.B.4. Processes

Generally the processes for steam electric power generation have not changed, although the trend is toward larger unit sizes for more economical operation. Figure 1 shows the increase in the size of new units since the late 1950's.

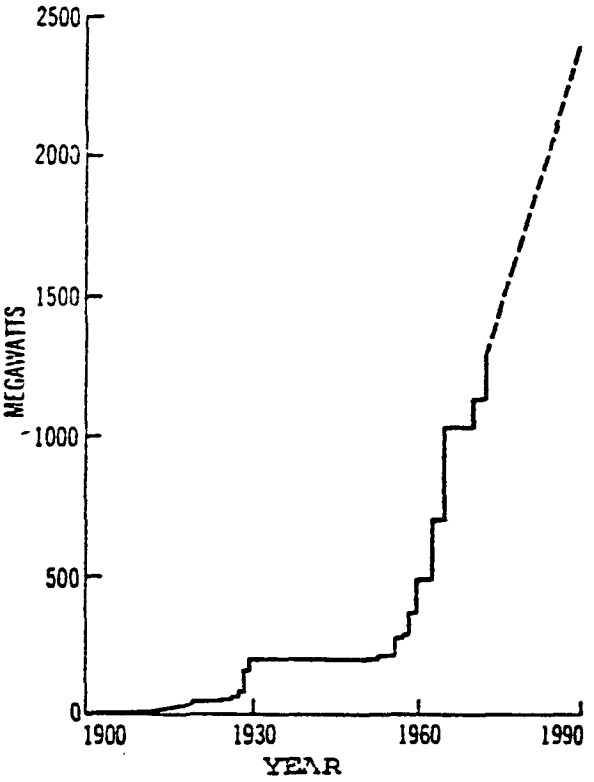

Source: US-EPA. 1977. Supplement for pretreatment to the development document for the steam electric power generating point source category. EPA 440/1-77/084. Washington DC.

Figure 1. Largest fossil-fueled steam electric turbine generators in service, 1900-1990.

I.B.5. Pollution Control

There are three major trends in air and water pollution control in the steam electric generating industry:

- The present trend is toward the use of cooling towers, cooling lakes or cooling ponds[1] rather than once-through cooling.

  Although an increased understanding of the potential environmental effects of heated water and the methods for minimizing them may result in more plants using once-through cooling, it is probable that off stream cooling systems will continue to be the major trends in the near future.

- The present trend in SO_2 emission reduction is the use of low-sulfur coal; however, more emphasis is being placed on development of pre-treatment techniques or SO_2 scrubbers that would permit the use of coals with higher sulfur content.

- Increased multiple use and recycling of water are encouraged and are being designed into existing power plants to reduce pollution control problems.

I.B.6. Environmental Impact

Evolving Federal and State regulations regarding water and air pollution and solid waste disposal have resulted in improvements in the technological design and efficiency of fossil-fueled power plants. More attention is being given to the siting of electric generating stations in recognition of the increased emphasis on State, regional, and local land use planning. Also, owing to the ratification of the National Environmental Policy Act of 1969 and other non-regulatory legislation, government decision-making has been exposed to increased public scrutiny and to a more objective and com-

---

[1]Pursuant to current regulations (Title 40 CFR, Part 423), the term cooling pond is interpreted to mean "any man-made water impoundment which does not impede the flow of a navigable stream and which is used to remove waste heat from heated condenser water prior to returning the recirculated cooling water to the main condenser". The term cooling lake is defined as "any man-made water impoundment which impedes the flow of a navigable stream and which is used to remove waste heat from heated condenser water prior to recirculating the water to the main condenser". It also should be noted that the definitions of these terms currently are being reviewed by US-EPA which could result in certain modifications. Therefore, the permit applicant should consult with appropriate EPA officials during project planning to ascertain interpretation of these terms.

plete environmental review process. Therefore, plants that have become operational since the early 1970's generally have had less process-related environmental impact than those constructed a decade or two ago. This trend is expected to continue. Because of concurrent trends toward large multi-unit plant sites, increased use of coal, and a general increase in overall industrial activity, the possibility of regional as well as cumulative local effects on environmental quality must receive increased consideration. It also is of concern that the combination of several activities may result in adverse impacts in distant environmentally sensitive areas or in impacts such as acid rain at points far from the sources of pollution. This concern is evidenced in the increased control required under the draft PSD regulations (discussed in Section I.D) of the 1977 Clean Air Act Amendments.

I.C. SIGNIFICANT ENVIRONMENTAL PROBLEMS

I.C.1. Location

Because power plants are large installations, and because a suitable water supply is needed, new plants usually must be built in rural areas. The construction and operation of power plants in rural locations usually involves significant changes in land use, which may be accompanied by direct social and ecological impacts. Secondary or indirect impacts, such as induced growth, infrastructural changes, and demographic changes also may occur; however, they would be associated primarily with the construction phase, because that is when the labor force is highest. The significance of such impacts depends largely on the local economy, existing infrastructure, characteristics of construction workers (e.g., local or non-local, size of worker's family), and other related factors. Long-term secondary impacts usually are not so significant, because the operational phase is non-labor-intensive. A discussion of secondary impact analysis is contained in the document, Environmental Impact Assessment Guidelines for Selected New Source Industries, (US-EPA 1975).

I.C.2. Raw Materials

The major environmental problems associated with raw materials are from handling, transport, and storage of the coal; also lime/limestone where flue gas desulfurization is employed. Runoff from on-site storage piles can cause significant environmental problems, as can the construction of transportation facilities needed to bring these materials to the site and the actual transportation of the materials. Environmental problems with oil and gas fuels arise primarily from leaks, spills or ruptures during transport to the power station.

I.C.3. Processes

Power plant processes can have a number of associated environmental impacts. These include:

- Stacks, Boilers: The height and size of the stacks, boilers, and other equipment generally will have an aesthetic impact.

- Coal Processing: Runoff and process waters are produced that can be contaminated to the point of causing ecological damage if not properly treated before discharge.

- Heat Dissipation: Large amounts of heat must be dissipated and various impacts can occur depending on the type of dissipation system selected:

  -- Once-through cooling can result in ecological impacts because of impingement and entrainment of aquatic organisms at the intake structure and excessive increases in ambient water temperatures in the discharge area.

  -- Cooling towers greatly reduce the impingement, entrainment, and heat problems, but can cause unfavorable aesthetic impacts because of their large size and visible plumes. Other environmental problems can result from fogging, icing, or salt deposition and from the discharge of blow-down containing large quantities of dissolved and suspended solids.

  -- Cooling lakes may require the conversion of substantial terrestrial acreage to an aquatic ecosystem, and may involve changing a segment of a free-flowing stream to a permanent lake environment. Proper design of the lake is needed to ensure that high concentrations of dissolved solids do not develop and eutrophication problems do not occur.

- Transmission and Railroad Lines: Construction and maintenance of transmission and railroad lines involve environmental disturbance over long, narrow areas, with possible aesthetic and ecological disturbances. Railroad lines can involve extensive changes in runoff patterns. Maintenance of transmission and railroad lines involves herbicides or other methods of weed and brush control.

- Fuel Combustion: Coal-fired plants and, to a lesser extent, those using oil produce environmentally damaging air emissions which may be visually displeasing due to opacity, and may also contain SO_2, particulates, nitrogen oxides, and possibly radioactive trace metals and fluorides, if proper control technology is not used. Also, the combustion of coal results in the production of large quantities of solid wastes in the form of ashes and possibly sludges from SO_2 scrubbers. The area required to store these wastes may involve a land use change and the leachate from such storage areas can contaminate ground or surface waters by the presence of heavy metals, acids, bases, etc.

- Chemical Cleaning, Demineralization: Wastes from the chemical cleaning of equipment and from the demineralization process used to prepare make-up water could cause ecological damage in the receiving water if not properly treated before discharge. Such wastes also are associated with pre-operational cleaning and treatment of metal surfaces, usually a large one-time discharge.

- Hazardous Material Storage and Handling: Materials often present in power plants include fuel oil, polychlorinated biphenyls (PCB's), strong acids and bases, and solvents. Accidents may result in discharge of these hazardous materials unless proper spill containment measures are taken.

I.C.4. Pollution Control

Although pollution control processes will reduce adverse impacts that result from various waste streams, the same processes can create other kinds of adverse impacts. For example, the heat dissipation process probably has the highest potential for adverse impact. This process can lead to a variety of potential environmental impacts from cooling towers, cooling lakes, cooling ponds, or once-through cooling systems (see Section I.C.3).

Air pollution control processes also generate liquid and solid wastes in the form of the residue from scrubbing operations and particulate removal. Another pollution control process that can lead to adverse impacts is the evaporation pond, often used in arid areas to dispose of cleaning and demineralization wastes, cooling tower blowdown, laboratory wastes, etc. Groundwater contamination is possible unless the pond is impermeable and, therefore, suitable provisions are needed to cover the pond when it is no longer functional to prevent leaching or washing out of contaminants. Also during the reuse and recycling of plant water, certain elements may become concentrated which could result in contamination of ground and surface waters.

I.D. REGULATIONS

Air pollution control standards are enumerated by Federal New Source Performance Standards (NSPS) as described in 40 CFR Parts 50 and 60 and by State and local air pollution regulations. Usually control is through the State regulatory function of licensing the construction of the power plant air pollution source.

Federal water pollution regulations are covered primarily by the Standards of Performance for New Sources (SPNS) for the steam electric power generating point source category, in Section 40 CFR 423. Control is through the NPDES permit process. Administration and enforcement rest either with US-EPA or with those States with approved NPDES permit programs.

Other applicable pollution control regulations include Section 316(a) of the Federal Water Pollution Control Act Amendments of 1972, which considers once-through cooling systems as an alternative to on-shore cooling systems, and Section 316(b) of the same act, which is concerned with the design of water intake systems. Solid waste regulations include the Federal Resource Conservation and Recovery Act of 1976 and various State regulations regarding disposal of solid wastes.

I.D.1. Air Pollution Performance Standards

Federal air pollution regulations specify both the amount of various pollutants that can be emitted from a source and standards for pollution of ambient air. (Some State regulations may be more strict than Federal New Source Performance Standards. State regulations will then apply.) The following paragraphs discuss the Federal regulations.

New Source Performance Standards (NSPS) (40 CFR 60) that follow specify the emissions allowed from fossil-fueled steam generators:

Pollutant	Coal	Oil	Gas
Sulfur dioxides [2]	1.2 lb/10^6 Btu	0.8 lb/10^6 Btu	0.8 lb/10^6 Btu
Nitrogen oxides *	0.6 lb/10^6 Btu	0.3 lb/10^6 Btu	0.2 lb/10^6 Btu
Particulate matter	0.1 lb/10^6 Btu	0.1 lb/10^6 Btu	0.1 lb/10^6 Btu
Plume opacity	20% (but allows 40% opacity for not more than a 2-minute period during any 60-minute period		

[2]For coal, a 90% reduction in potential SO_2 emissions is required at all times except when emissions to the atmosphere are less than 0.6lb/10^6BTU. When SO_2 emissions are less than 0.6lb/10^6 BTU, a 70% reduction in emissions is required.

For gaseous and liquid fuels, a 90% reduction in potential SO_2 emissions is required. The percent reduction does not apply if SO_2 emissions to the atmosphere are less than 0.2lb/10^6BTU.

* The coal emissions of 0.6lb/10^6 BTU do not apply to 1) fuel, used in a slap trap furnace, containing more than 25%, by weight, lignite which has been mined in North Dakota, South Dakota, or Montana; 2) fuel containing more than 25%, by weight coal refuse; 3) subbituminous coal; or 4) solid fuel derived from coal. The emissions for a slap trap furnace burning 25% or more lignite from North Dakota, South Dakota or Montana are 0.80lb/10^6BTU. There are no nitrogen oxides emissions requirements for fuel containing 25% or more coal refuse. The emissions for subbituminous coal, shale oil, or any solid liquid or gaseous fuel derived from coal is 0.5lb/10^6BTU.

Table 4. Applicable Federal ambient air quality standards

Emission	Standard* Primary	Standard* Secondary
Sulfur dioxide	80 $\mu g/m^3$ annual arithmetic mean	1,300 $\mu g/m^3$ maximum 3-hour concentration
	365 $\mu g/m^3$ maximum 24-hour concentration	
Particulate matter	75 $\mu g/m^3$ annual geometric mean	150 $\mu g/m^3$ maximum 24-hour concentration
	260 $\mu g/m^3$ maximum 24-hour concentration	60 $\mu g/m^3$ annual geometric mean as guide in assessing implementation plants
Nitrogen dioxide**	100 $\mu g/m^3$ annual arithmetic mean	100 $\mu g/m^3$ annual arithmetic mean
Ozone	.12ppm (235 micrograms/m^3) maximum 1-hour concentration	.12ppm (235 micrograms/m^3) maximum 1-hour concentration
Carbon monoxide	10 mg/m^3 (9 ppm) maximum 8-hour concentration	10 mg/m^3 (9 ppm) maximum 8-hour concentration
	40 mg/m^3 (35 ppm) maximum 1-hour concentration	40 mg/m^3 (35 ppm) maximum 1-hour concentration

*For any standard other than annual, the maximum allowable concentration may be exceeded for the prescribed period once each year.

**The Clean Air Act Amendments of 1977 (PL 95-95) require the US-EPA Administrator promulgate a national primary ambient air quality standard for NO_2 concentrations over a period of not more than 3 hours unless, based on the criteria issued under Section 108(c), he finds that there is no significant evidence that such a standard for such a period is requisite to protect public health.

Source: 40 CFR 50.

Ambient air quality standards (40 CFR 50) specify the ambient air quality that must be maintained outside the plant boundary or within the boundary where the general public has access. Applicable Federal standards are shown in Table 4. Standards designated as primary are those necessary, with an adequate margin of safety, to protect the public health; secondary standards are those necessary to protect the public welfare from any known or anticipated adverse effects of an air pollutant.

In 1974, the Environmental Protection Agency (EPA) issued regulations for the prevention of significant deterioration of air quality (PSD) under the 1970 version of the Clean Air Act (Public Law 90-604). These regulations established a plan for protecting areas that possess air quality which is cleaner than the National Ambient Air Quality Standards (NAAQS). Under EPA's regulatory plan, clean air areas of the Nation could be designated as one of three "Classes". The plan permitted specified numerical "increments" of air pollution increases from major stationary sources for each class, up to a level considered to be "significant" for that area. Class I provided extraordinary protection from air quality deterioration and permitted only minor increases in air pollution levels. Under this concept, virtually any increase in air pollution in the above pristine areas would be considered significant. Class II increments permitted increases in air pollution levels such as would usually accompany well-controlled growth. Class III increments permitted increases in air pollution levels up to the NAAQS.

Sections 160-169 were added to the Act by the Clean Air Act Amendments of 1977. These amendments adopt the basic concept of the above administratively developed procedure of allowing incremental increases in air pollutants by class. Through these amendments, Congress also provided a mechanism to apply a practical adverse impact test which did not exist in the EPA regulations.

The PSD requirements of 1974 applied only to two pollutants: total suspended particulates (TSP) and sulfur dioxide (SO_2). However, Section 166 requires EPA to promulgate PSD regulations by 7 August 1980 addressing nitrogen oxides, hydrocarbons, carbon monoxide, and photochemical oxidants utilizing increments or other effective control strategies. For these additional pollutants, States may adopt non-increment control strategies which, if taken as a whole, accomplish the purposes of PSD policy set forth in Section 160.

Whereas the earlier EPA regulatory process had not resulted in the Class I designation of any Federal lands, the 1977 Amendments designated certain Federal lands Class I. All international parks, national memorial parks and national wilderness areas exceeding 5,000 acres, and national parks exceeding 6,000 acres, are designated Class I. These 158 areas may not be redesignated to another class through State or administrative action. The remaining areas of the country are initially designated Class II. Within this Class II category, certain national primitive areas, national wild and scenic rivers, national wildlife refuges, national seashores and lakeshores, and new national park and wilderness areas which are established after 7 August 1977, if over 10,000 acres in size are Class II "floor areas" and are ineligible for redesignation to Class III.

Although the earlier EPA regulatory process allowed redesignation by the Federal land manager, the 1977 amendments place the general redesignation responsibility with the States. The Federal land manager only has an advisory role in the redesignation process, and may recommend redesignation to the appropriate State or to Congress.

In order for Congress to redesignate areas, proposed legislation would be introduced. Once proposed, this probably would follow the normal legislative process of committee hearings, floor debate, and action. In order for a State to redesignate areas, the detailed process outlined in Section 164(b) would be followed. This would include an analysis of the health, environmental, economic, social, and energy effects of the proposed redesignation to be followed by a public hearing.

Class I status provides protection to areas by requiring any new major emitting facility (generally a large point source of air pollution--see Section 169(1) for definition) in the vicinity to be built in such a way and place as to insure no adverse impact on the Class I air quality related values.

The permit may be issued if the Class I increment will not be exceeded, unless the Federal land manager demonstrates to the satisfaction of the State that the facility will have an adverse impact on the Class I air quality related values.

The permit must be denied if the Class I increment will be exceeded, unless the applicant receives certification from the Federal land manager that the facility will not adversely affect Class I air quality related values. Then the permit may be issued even though the Class I increment will be exceeded. (Up to the Class I' increment -- see Table 5.)

The Clean Air Act, Section 165, also provides in very limited situations for permit issuance based on an SO_2 variance if an applicant does not receive certification from the Federal land manager. This variance will allow exceeding the Class I SO_2 increments for up to 18 days in any annual period, as long as the SO_2 levels do not exceed the twenty-four hour increments of 36 mg/m^3 for low terrain and 62 mg/m^3 for high terrain areas and the three-hour increments of 130 mg/m^3 for low terrain and 221 mg/m^3 for high terrain areas. The variance is available when the Governor determines that there will be no adverse impact on the Class I air quality related values. If the Federal land manager does not concur in this determination, then the President decides whether it is in the national interest to issue the permit.

Table 5. Nondeterioration increments: maximum allowable increase by class.

Pollutant*	Class I ($\mu g/m^3$)	Class II ($\mu g/m^3$)	Class III ($\mu g/m^3$)	Class I' exception ($\mu g/m^3$)
Particulate matter:				
Annual geometric mean	5	19	37	19
24-hour maximum	10	37	75	37
Sulfur dioxide:				
Annual arithmetic mean	2	20	40	20
24-hour maximum	5**	91	182	91
3-hour maximum	25**	512	700	325

*Other pollutants for which PSD regulations will be promulgated are to include hydrocarbons, carbon monoxide, photochemical oxidants, and nitrogen oxides.

**A variance may be allowed to exceed each of these increments on 18 days per year, subject to limiting 24-hour increments of 36 $\mu g/m^3$ for low terrain and 62 $\mu g/m^3$ for high terrain and 3-hour increments of 130 $\mu g/m^3$ for low terrain and 221 $\mu g/m^3$ for high terrain. To obtain such a variance both State and Federal approval is required.

Source: Public Law 95-95. 1977. Clean Air Act Amendments of 1977, Part C, Subpart 1, Section 163 (Passed August 1977).

I.D.2. Water Pollution Standards of Performance

Under the authority of the 1972 Federal Water Pollution Control Act, as amended (Public Law 92-500), EPA has promulgated standards (Oct. 8, 1974, FR39 No. 196) of performance for SPNS which specify maximum allowable concentrations of impurities in the various waste streams from a steam electric generating station. These standards are taken into consideration in issuing an NPDES permit. The applicable standards[3] are:

- The pH of all discharges shall be within the range of 6.0-9.0.

- There shall be no discharge of polychlorinated biphenyl compounds, such as those commonly used for transformer fluids.

- The quantity of pollutants discharged in bottom ash water shall not exceed the quantity obtained by multiplying the flow of bottom ash water by the following concentrations and dividing the product by 20:

Total suspended solids:	100 mg/l maximum for any 1 day
	30 mg/l maximum average of daily values for 30 consecutive days
Oil and grease:	20 mg/l daily maximum
	15 mg/l maximum 30-day average

  In essence, this standard requires that if bottom ash transport water is discharged it must fall within the above values and the bottom ash transport water must be recycled so that the amount discharged is less than 1/20 of the transport water flow.

- No discharge of total suspended solids or oil and grease is allowed in discharges of fly ash transport water. In essence, this standard requires that there will be no discharge of fly ash transport water.[4]

---

[3]US-EPA is currently reviewing new source effluent standards (per NRDC/EPA Consent Decree). The reader should check with EPA to ascertain the status of that review.

[4]Per the 4th Circuit Court of Appeals remand, standards of performance for dry ash handling systems are being reviewed, therefore, the new source permit applicant should consult with appropriate EPA officials on the current status of these regulations.

- The concentrations of pollutants in the discharge of boiler blowdown and metal cleaning wastes shall not exceed:

  Total suspended solids: 100 mg/l daily maximum
  30 mg/l 30-day average

  Oil and grease: 20 mg/l daily maximum
  15 mg/l 30-day average

  Copper, total: 1 mg/l daily maximum

  Iron, total: 1 mg/l daily maximum

- The discharge of various other low-volume wastes, such as ion-exchange wastes, floor drains, and laboratory streams, shall not contain pollutants in excess of:

  Total suspended solids: 100 mg/l daily maximum
  30 mg/l 30-day average

  Oil and grease: 20 mg/l daily maximum
  15 mg/l 30-day average

- There shall be no discharge of heat from the main condensers, except that heat may be discharged in blowdown from recirculating cooling water systems or cooling ponds provided that the temperature at which the blowdown is discharged does not exceed the lowest temperature in the recirculating system before make-up water is added.[5]

- The amount of free available chlorine in a discharge of once-through cooling water or cooling tower blowdown is limited to 0.5 mg/l maximum and 0.2 mg/l average concentrations.[6] Chlorine concentrations in the discharge to or from cooling ponds or lakes are not specified.

---

[5]All thermal effluent limitations for the steam electric power generating point source category (Part 423) have been remanded as a result of a recent 4th Circuit Court of Appeals decision (Appalachian Power v. Train, 545 F. 2d 1351 (4th Cir 1976). The applicant should consult with the appropriate EPA official to determine the current status of thermal regulations. Prior to the development of new thermal effluent limitations, the appropriate NPDES permit letting authority (EPA regional officer or State) is to make the best engineering judgement, based on best available technology (BAT), on a case by case basis.

[6]This standard is in the process of being re-evaluated, based on recently available intermittent bioassay data. It is likely that the new standard will be different and that the new standard will be based on total residual chlorine. Recent testing of intermittent exposures has indicated that the free chlorine residuals are significantly more toxic than the combined chlorine residuals. It is possible that new standards might be water quality related, based on the relative percentages of the residual chlorine

- Neither free available chlorine nor total residual chlorine can be discharged from any unit for more than 2 hours a day, nor from more than one unit at a time.

- Runoff from any materials (coal, ash, etc.) storage area or any construction area shall be between pH values of 6.0-9.0 and total suspended solids shall not exceed 50 mg/l, except for overflow from a treatment system designed to handle a 10-year, 24-hour rainfall event.[7]

I.D.3 State Power Plant Siting Laws

As of 1976, 25 States had passed legislation that addressed the siting of electric generating stations. The degree of comprehensiveness of these siting laws and regulations varies greatly between States. The existing State siting laws are shown in Table 6. Applicatns for permits for new source power plants should consult the appropriate lead agency to determine the existence and applicability of such regulations.

---

[6]forms produced. Many states are now using chlorine standards more stringent than the stated Federal limits.

The possible formation of toxic levels of chloroganics during power plant chlorination also is in need of more careful scrutiny. The data base currently existing for these compounds is small, and in areas where the water quality is poor and the amount of chlorine used is high, additional data should be obtained for chlororganics.

[7]Effluent limitations for runoff from coal pile storage and chemical handling areas have been remanded per the 4th Circuit Court of Appeals decision. The permit applicant should consult with the appropriate permit letting official (EPA regional office or State) regarding the current status of these effluent limitations.

Table 6. State siting laws

State	Lead agency: Public service commission	Lead agency: Independent	Lead agency: Environmental	Forecasting plans required (years)*: Utility	Forecasting plans required (years)*: State	Legislation adopted: Original	Legislation adopted: Amendments	Title of legislation or agency created
Arizona		X		10		1971		Power Plant Siting Committee
Arkansas	X			2		1973		Utility Facility Environmental Protection Act (2 stop)
California		X			5-10-20	1971	1973	Energy Resources Conservation and Development Commission
Connecticut		X		10		1973	1975	Public Utilities Environmental Standards Act (Power Facility Evaluation Council)
Florida			X	10		1973	1975	Electric Power Plant Siting Act (1973)
Iowa		X		None		1976		State Commerce Commission
Kansas		X		None		1976		Corporation Commission
Kentucky	X			None		1974		Power Plant Siting Act
Maryland	X				10	1971		Power Plant Siting Act
Massachusetts		X			10	1973	1975	Energy Facilities & Siting Council (1975)
Minnesota			X	15		1973		Power Plant Siting Act
Montana	X			10		1973		Utility Siting Act
Nevada	X			None		1971		Public Service Commission
New Hampshire	X			10-15		1971		Electric Power Plant Siting Act
New Jersey			X		4	1973		Coastal Area Facility Review Act
New Mexico	X			None		1971		Public Utilities Commission
New York		X			15	1972	1975	Board of Electric Generation, Siting and the Environment (1975)

Table 6. State siting laws--Concluded.

State	Lead agency			Forecasting plans required (years)*		Legislation adopted		Title of legislation or agency created
	Public service commission	Independent	Environmental	Utility	State	Original	Amendments	
North Dakota	X				10	1975		Energy Conversion and Transmission Facilities Siting Act
Ohio		X			10	1972		Power Siting Commission
Oregon		X		10		1971	1975	Energy Facility Siting Council (1975)
South Carolina		X		10		1971		Public Service Commission
Vermont		X		None		1975		Public Service Board
Washington		X		10		1970	1976	Energy Facility Site Evaluation Council (1976)
Wisconsin		X		10		1975		Public Service Commission (2 stop)
Wyoming		X		5		1975		Industrial Development and Siting Act

*Indicates the period of time that utility- or State-prepared forecasts must cover (e.g., Arizona utilities are required to submit a 10-year forecast)

Source: US Nuclear Regulatory Commission. 1977. Improving regulatory effectiveness in federal/state siting actions. Office of State Programs, Washington DC. NUREG-0195, variously paged.

II. IMPACT IDENTIFICATION

II.A. SITE PREPARATION AND FACILITY CONSTRUCTION

The applicant should discuss the potential effects of site preparation and construction activities. The environmental effects of preparation of the site and construction of the new source power plant normally are not unique to the electrical generating industry. Any major land-disturbing construction project probably will have similar impacts; however, at present, neither the quantities of the various pollutants resulting from preconstruction and construction work nor their effects on the integrity of aquatic and terrestrial ecosystems have been studied sufficiently to permit broad generalizations. Therefore, in addition to the impact assessment framework provided in the EPA document, Environmental Impact Assessment Guidelines for Selected New Source Industries, a suggested checklist of important study items is presented in Table 7 for further guidance to the applicant in completing this section. The basic components of site preparation and plant construction outlined in the table include preconstruction, site work, permanent facilities, and project closeout. Whereas only potentially significant areas of impact are presented in the checklist, a system of values and significance should be assigned to the checklist items after sufficient quantitative data have been acquired for an individual site or for a region. Although there has been an effort to discuss areas of impact specific to fossil-fueled power stations, these guidelines do not reflect regional- or site-specific conditions. Therefore the permit applicant is encouraged to discuss these types of issues with appropriate EPA staff prior to preparation of the EIA. All proposed conservation practices should be tailored to the specific site(s) being considered in order to account for and to protect special features of the site (e.g., critical habitats of important or imperiled species, archaeological/historical sites, high quality streams, wetlands or other sensitive areas on the site). All mitigating conservation measures which are proposed to avoid or reduce adverse impacts from site preparation and construction activities should be described in the EIA.

II.B. RAW MATERIALS HANDLING

II.B.1. Coal.

The potential environmental impacts associated with coal handling and storage primarily result from coal storage area runoff and particularly from generation of dust. An electrical generating plant must store coal to maintain a continuous supply to the burners between shipments. The live storage pile generally contains sufficient coal to maintain the supply between scheduled coal shipments; in addition, a permanent storage pile is maintained as a cushion against interruptions in the delivery schedule. This permanent stockpile typically will hold a 100-day fuel supply, or in the case of mine-mouth plants, approximately a 50-day supply.

Table 7. Outline of potential environmental impacts and relevant pollutants resulting from site preparation and construction practices

Construction practice	Potential environmental impacts	Primary pollutants
1. Preconstruction		
a. Site inventory	Short term and nominal	Dust, noise, sediment
(1) Vehicular traffic	Dust, sediment, tree injury	
(2) Test pits	Tree root injury, sediment	
b. Environmental monitoring	Negligible if properly done	Visual
c. Temporary controls	Short term and nominal	Sediment spoil, nutrients, solid waste
(1) Sedimentation ponds	Vegetation destroyed, water quality improved	
(2) Dikes and berms	Vegetation destroyed, water quality improved	
(3) Vegetation	Fertilizers in excess	
(4) Dust control	Negligible if properly done	
2. Site Work		
a. Clearing and demolition	Short term	Dust, sediment, noise, solid wastes, wood wastes
(1) Clearing	Decreased area of protective tree, shrub, ground covers; stripping of topsoil; increased soil erosion, sedimentation, stormwater runoff; increased stream water temperatures; modification of stream banks and channels, water quality	
(2) Demolition	Increased dust, noise, solid wastes	
b. Temporary facilities	Long-term	Gases, odors, fumes, particulates, dust, deicing chemicals, noise, petroleum products, waste water, solid wastes, aerosols, pesticides
(1) Shops and storage sheds	Increased surface areas impervious to water infiltration, increased water runoff, petroleum products	
(2) Access roads and parking lots	Increased surface areas impervious to water infiltration, increased water runoff, generation of dust on unpaved areas	

Table 7. Outline of potential environmental impacts and relevant pollutants resulting from site preparation and construction practices--Continued

Construction practice	Potential environmental impacts	Primary pollutants
(3) Utility trenches and backfills	Increased visual impacts, soil erosion, sedimentation for short periods	
(4) Sanitary facilities	Increased visual impacts, solid wastes	
(5) Fences	Barriers to animal migration	
(6) Laydown areas	Visual impacts, increased runoff	
(7) Concrete batch plant	Increased visual impacts; disposal of wastewater, increased dust and noise	
(8) Temporary and permanent pest control (termites, weeds, insects)	Nondegradable or slowly degradable pesticides are accumulated by plants and animals, then passed up the food chain to man. Degradable pesticides having short biological half-lives are preferred for use.	
c. Earthwork	Long term	
(1) Excavation (2) Grading (3) Trenching (4) Soil treatment	Stripping, soil stockpiling, and site grading; increased erosion, sedimentation, and runoff; soil compaction; increased in-soil levels of potentially hazardous materials; side effects on living plants and animals, and the incorporation of decomposition products into food chains, water quality	Dust, noise, sediment, debris, wood wastes, solid wastes, pesticides, particulates, bituminous products, soil conditioner chemicals
d. Site drainage	Long term	
(1) Foundation drainage (2) Dewatering (3) Well points (4) Stream channel relocation	Decreased volume of underground water for short and long time periods, increased stream flow volumes and velocities, downstream damages, water quality, habitat alteration	Sediment
e. Landscaping		
(1) Temporary seeding (2) Permanent seeding and sodding	Decreased soil erosion and overland flow of stormwater, stabilization of exposed cut and fill slopes, increased water infiltration and underground storage of water, minimize visual impacts	Nutrients, pesticides

Table 7. Outline of potential environmental impacts and relevant pollutants resulting from site preparation and construction practices--Continued

Construction practice	Potential environmental impacts	Primary pollutants
3. Permanent facilities		
a. Transmission lines and heavy traffic areas	Long term	Sediment, dust, noise, particulates
(1) Parking lots	Stormwater runoff, petroleum products	
(2) Switchyard	Visual impacts, sediment, runoff	
(3) Railroad spur line	Stormwater runoff	
b. Buildings	Long term	Solid wastes
(1) Warehouses turbines, & boiler blds.	Impervious surfaces, stormwater runoff, solid wastes, spillages	
(2) Sanitary waste treatment	Odors, discharges, bacteria, viruses	
(3) Cooling towers	Visual impacts	
c. Related facilities	Long term	Sediment, trace elements, noise, caustic chemical wastes, spoil, flocculants, particulates, fumes, solid wastes, nutrients
(1) Intake and discharge channel	Shoreline changes, bottom topography changes, fish migration, benthic fauna changes	
(2) Water supply and treatment	Waste discharges, water quality	
(3) Stormwater drainage	Sediment, water quality	
(4) Wastewater treatment	Sediment, water quality, trace elements	
(5) Dams and impoundments	Dredging, shoreline erosion	
(6) Breakwaters, jetties, etc.	Circulation patterns in the waterway	
(7) Fuel handling equipment	Spillages, fire, and visual impacts	
(8) Oil storage tanks, controls, and piping	Visual impacts	

Table 7. Outline of potential environmental impacts and relevant pollutants resulting from site preparation and construction practices--Continued

Construction practice	Potential environmental impacts	Primary pollutants
(9) Conveying systems (cranes, hoists, chutes)	Visual impacts	
(10) Cooling lakes	Conversion of terrestrial and free flowing stream environment to a lake environment (land use tradeoffs); hydrological changes, habitat changes, sedimentation, water quality	
(11) Solid waste handling equipment (incinerators, wood chippers, trash compactors)	Noise, visual impacts	Particulates, dust, solid wastes
d. Security fencing	Long term	Sediments, wood wastes
(1) Access road	Increased runoff	
(2) Fencing	Barriers to animal movements	
4. Project closeout		
a. Removal of temporary offices and shops	Short term	Noise, dust, solid wastes
(1) Demolition	Noise, solid waste, dust	
(2) Relocation	Stormwater runoff, traffic blockages, soil compaction	
b. Site restoration	Short term	Sediment, dust
(1) Finish grading	Sediment, dust, soil compaction	
(2) Topsoiling	Erosion, sediment	
(3) Fertilizing	Nutrient runoff, water quality	
(4) Sediment controls	Vegetation, water quality improved	
c. Preliminary start-up	Short term	Nutrients, petroleum products
(1) Cleaning	Water quality, oils, phosphate and other nutrients	
(2) Flushing		

Table 7. Outline of potential environmental impacts and relevant pollutants resulting from site preparation and construction practices--Concluded

Source: Modified from Atomic Industrial Forum, Inc. 1974. General environmental guidelines for evaluating and reporting the effects of nuclear power plant site preparation, plant and transmission facility construction. Prepared by Hittman Associates, Inc. Washington, DC.

Coal contains various elements (Table 8) that may enter thin films of water found when the coal is damp and exposed to air. Rainfall will wash off this film, producing an initial runoff that is often acid and usually high in concentrations of iron, copper, and/or zinc, and that has objectionable amounts of suspended solids and organic material. The acid and reducing nature of the runoff is caused by the sulfur compounds in the coal; these characteristics increase the solubility of many metallic impurities.

II.B.1.a. Terrestrial Impacts. In addition to the preemption of land (usually 1 to 2 hectares), the permit applicant should evaluate potential terrestrial impacts resulting from dust generation from coal storage piles. A Threshold Limit Value (TLV) for inhalation of coal dust has been established by the American Conference of Governmental Industrial Hygienists: 60.2 mg/m^3. This standard is based on research that indicated a less-than-1 percent probability of contacting a specific type of pneumoconiosis after 35 years of exposure to coal dust (National Academy of Sciences 1975). National Ambient Air Quality Standards for particulate matter also have been established (Table 4). Individual States also may promulgate standards for nuisance dust.

Dust suppression at active storage piles may consist of occasional water sprays. Where this method is unsuccessful, chemical sprays containing alkyl compounds, phenol, ether, and ethylene glycol should be considered (for experience with these methods see US-DOI 1976).

Infiltration water and runoff from the storage piles can remove some of the more soluble materials from the coal and introduce them into surface water, soil, and ultimately groundwater. Water-soluble material from the storage pile arises mainly from oxidation of the coal surface during exposure to the air and rainfall in unconfined coal piles. Runoff and infiltration water from these piles likely contain coal fines, humic acids, sulfuric acid, and inorganic ions. The concentrations of the constituents of water after contact with the piles are poorly known, but can be assumed to depend on the:

- Type of coal
- Extent of exposure to local climatic conditions
- Acidity of the rainfall
- Temperatures within the pile
- Length of contact time between the water and the coal.

The terrestrial effects of this water are likely to be qualitatively similar to effects of acid coal mine drainage (US-DOI 1969), but the volumes and concentrations normally are small compared to those of mine drainage. Effects on the land should be considered for areas immediately

Table 8. Coal pile drainage water: Analyses from nine plants

Contaminant	Analyses (mg/l) Range	Average of three plants, high-sulfur coal	One plant, low-sulfur coal
Alkalinity	0 - 82	0	24
Acidity	8 -27,810	24,800	6
BOD	0 - 10	NA	NA
COD	85 - 1,099	NA	NA
Total solids	1,330 -45,000	NA	NA
Total dissolved solids	247 -44,050	26,500	NA
Total suspended solids	22 - 3,302	NA	NA
Ammonia (N)	0 - 1.8	NA	NA
Nitrate (N)	0.3 - 2.2	NA	NA
P	0.2 - 1.2	NA	NA
Turbidity	3 - 505	NA	6
Hardness ($CaCO_3$)	130 - 1,850	NA	NA
Sulfate	133 -21,920	16,000	NA
Chloride	4 - 481	NA	NA
Al	825 - 1,200	1,012	NA
Cr	0 - 16	8	NA
Cu	1.6 - 3.4	2.6	NA
Fe	0.1 -93,000	48,800	1
Zn	0.01- 23	18	NA

NA = Not available.

Source: US Environmental Protection Agency. October 1974. Development document for effluent guidelines and new source performance standards for the steam electric power generating point source category. EPA 440/1-74 029-a.

below, and adjacent to, the piles. Organic matter and cations in the soils at these locations could be subject to leaching by the acid waters and could be depleted from the surface horizons. These effects are expected to be more pronounced in the Eastern and Midwestern United States than in the West or Southwest, owing to the higher rainfall and higher coal sulfur contents in the eastern half of the country.

II.B.1.b. Aquatic Impacts. Runoff water from coal storage piles is a potential source of surface and groundwater contamination. Experience with gob and slurry piles associated with coal cleaning plants indicates some of the problems which may arise. Gob and slurry piles may have a high coal content and runoff water often has a low pH and contains suspended coal fines and high concentrations of iron, sulfates, and many trace elements. Groundwater also may be of poor quality in the vicinity of these piles.

These same problems may occur with runoff from coal storage piles, although to a lesser extent. Good coal pile management techniques limit contact of water with coal, and many contaminants in coal suitable for use in electrical generation are present in much lower concentration than in coal processing wastes.

Because water infiltration into coal storage piles increases the danger of spontaneous ignition of this coal and reduces its heating value, good coal pile management should include such techniques as:

- Laying the pile on a dry and relatively impervious foundation

- Sealing the pile surface by compaction or other means in order to minimize coal-water contact.

These same techniques will minimize leaching from the coal. Few data are available at this writing on the quality of runoff water from coal piles, but the applicant should take measures to minimize the chance of runoff reaching surface water, and to limit or prevent infiltration of water into soils of low absorption capacity or with shallow water tables to guard against groundwater contamination (Bucklen, O.B. and P.G. Meikle 1968).

Coal fines transported into aquatic systems could produce substrate alterations capable of altering or eliminating the benthic community and impacting the fish community through loss of food supplies and loss of spawning habitat. The effect of dissolved materials in such runoff upon the aquatic community should be estimated and discussed in the EIA.

The significance of the impacts resulting from such waste streams on the terrestrial and aquatic resources in the study area will depend largely on site-specific factors. Thus the applicant should identify all related

factors in order to accurately assess impacts and to design and implement adequate control measures.

II.B.2. Oil and Gas

Oil and gas may be brought to the plant by means of tankers, barges or pipelines. Potential environmental impacts from handling these fuels derive from spills and leaks, and generally the severity of impacts is proportionate to the quantity of the spill or leak, as well as the sensitivity of the site. Because the supply function is large and complex it is inevitable that accidents will occur, although theoretically they are avoidable. These potential impacts should be discussed statistically, based on statistical frequencies of accidents that have occurred in similar operations. Information agencies may include the U.S. Department of Transportation (Office of Pipeline Safety), the U.S. Army Corps of Engineers, the Federal Power Commission, and the U.S. Coast Guard.

II.C. PROCESSES AND ASSOCIATED WASTE STREAMS

The generation of electricity in a fossil-fueled plant involves several processes:

- Combustion of coal, oil, or gas in a boiler to convert water to steam
- Conversion of heat energy in high pressure steam to mechanical energy in a turbine, which drives a generator to produce electricity
- Condensation of exhaust steam from the turbine in a condenser
- Return of condensed water to the boiler to continue the cycle.

These processes generate a variety of waste streams. The treatment of these streams and their final impact on the environment must be considered in the environmental impact assessment (EIA). Figure 2 shows a typical flow diagram for a fossil-fueled steam electric power plant, with the major waste streams identified. Many variations are possible. For example, the recycled cooling tower system could be replaced by a cooling lake, cooling pond, or once-through cooling water could be used in the condenser. Some of the wastewaters may be recycled or reused in particular systems. The diagram includes typical flow rates for a large coal-fired unit, but these values may vary considerably depending on plant design. The characteristics of the individual waste streams are discussed below.

The applicant should identify specific pollutants and explain, in the EIA, the proposed method(s) for treatment and disposal of all wastes and the associated potential impacts.

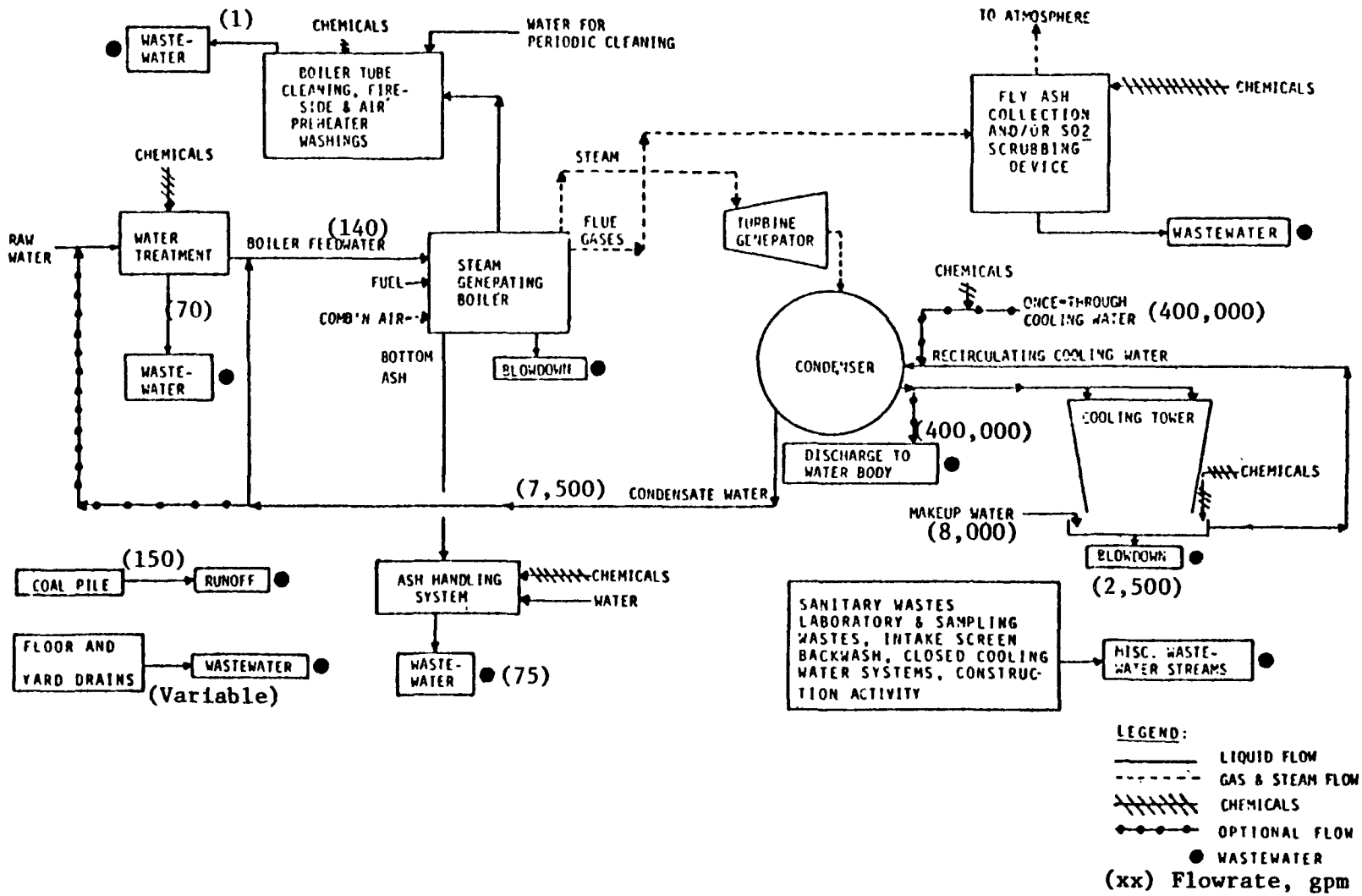

Source: US Environmental Protection Agency. 1977. Supplement for pretreatment to the development document for the steam electric generating point source category. EPA 440/1-77-084.

Figure 2. Fossil-fueled steam electric power plant: Typical flow diagram for a 1,000-MW plant

II.C.1. Continuous Aqueous Waste Streams

II.C.1.a. Heat Dissipation Systems. One of the basic characteristics of a steam electric generating plant is that about 2.5 to 3 times more energy must be dissipated as heat than is actually generated as electricity, due to thermodynamic limitations on the process of converting heat to electrical energy. The historic and generally the most economical process to dissipate this heat is to use water from a nearby waterbody in a once-through cooling system to condense the steam after it leaves the turbines, the condensate being returned to the boiler. The lower the temperature at which this condensation takes place, the more efficient the generation process becomes. The once-through system is simple and efficient, but it does have problems: the heated water which is returned to the river, lake, or ocean can cause biological damage and disrupt the existing ecosystem in the receiving waterbody.

Other types of cooling systems are available which dissipate the heat primarily to the atmosphere rather than a waterbody, including cooling towers, cooling ponds, cooling lakes, spray ponds or canals, and dry cooling towers. Cooling towers or similar systems greatly reduce the possibility of environmental damage due to heat, and have been determined to be the best practical technology (BPT) currently available for the dissipation of heat, and thus would be required for all steam electric generating systems under the 1972 Federal Water Pollution Control Act Amendments. However, the amendments also recognize that there will be situations where the amount of heat to be dissipated will be small in relation to the size of the waterbody and ecological disruption will be small even if once-through cooling is proposed. Section 316(a) (FWPCA, PL 92-500) provides for the approval of once-through cooling as an alternative to cooling towers or ponds if an applicant can demonstrate successfully that the proposed thermal effluent will ensure the protection and propagation of a balanced indigenous community of shellfish, finfish, and sildlife in and on the receiving waterbody.

Thus, a wide variety of alternate cooling systems are available to the designer of a new source poser plant and the characteristics of these systems are discussed in more detail in Section V (Analysis of Alternatives) of these guidelines.

After selection of the preferred cooling system, the potential environmental impact associated with the system should be discussed. The following paragraphs outline the type of impact assessment consider-

ations appropriate for inclusion in the EIA for the major heat dissipation systems.[8]

(1) Once-Through System. If the applicant proposes a once-through cooling system it may be necessary for him to prepare a separate application for approval under Section 316(a) of PL 92-500. An Interagency 316(a) Technical Guidelines Manual (US-EPA 1977a) has been prepared to assist in this application. The manual discusses the methodologies available to assess the magnitude and significance of impacts of once-through cooling on the ecology of the receiving waterbody. These methodologies represent the state-of-the-art for the assessment of thermal impacts; they also can be used to provide guidance to an applicant in discussing the impact of once-through cooling in the EIA.

To thoroughly evaluate the potential biological impact of a proposed once-through cooling system, the following methodology can be used:

- Modeling predictions of thermal plume characteristics--(See Section II.F.2.) At a minimum, the following plume predictions should be made:

  --Extent during worst-case conditions

  --Extent during average and extreme seasonal conditions

  --Absolute temperatures expected during critical life stage periods for important local biota

  --Interactions with other plumes or pollutants

- Predictions of compliance with water quality standards:

  --Frequency and extent of predicted violations

---

8 This discussion of thermal impact evaluation procedures is not intended to replace, circumvent, or otherwise avoid previously published section 316(a) guidance materials (i.e., US-EPA 1977a); nor is the information developed for inclusion in the EIA intended to act as a substitute for a 316(a) demonstration or to satisfy 316(a) requirements. If a 316(a) demonstration has been conducted on the proposed new source, the EIA can address the thermal impact question by summarizing the results of that demonstration and including the report by reference.

- Effect on Important Local Biota--The effects of the heated plume (as a result of the analyses above) must be evaluated for phytoplankton, periphyton, aquatic macrophytes, zooplankton, macroinvertebrates, shellfish, larval fish, and adult fish to the extent that these various types of biota are important to the ecology of the receiving water. Or to the extent that they could become important if the quality of the receiving water improves in the future due to pollution abatement efforts.

  Because of the great complexity and variety of the aquatic ecosystems, the effect of heated effluents from a once-through cooling system or a cooling pond usually must be considered by evaluating the effect on biota at various trophic levels. The selection of important local biota should be based on a thorough examination of the available literature and also on field collected data, because although the species are well known for a particular waterbody, it is unlikely that the distribution of those species will be well defined for the power plant site. (The permit applicant can refer to the 316(a) guidelines manual above to select representative biota important to the local ecology.) The potential direct and indirect effects of the thermal discharge on selected biota should then be evaluated, based on the following major factors:

  --Mortality: Where applicable, the applicant should discuss in the EIA the potential for direct mortalities of fish and benthic communities within the effluent zone from thermal stress (cold and heat shock) based on known thermal tolerances.

  --Growth: The applicant should address the potential for inhibiting effects on growth and maturation at the species and community level.

  --Reproduction: Where applicable, the applicant should assess potential adverse effects on spawning sites, reproductive potential, and nursery grounds, to ensure the protection and propagation of a balanced aquatic community.

  --Avoidance: The diversity and relative abundance of the normally occurring mobile aquatic biota may be affected within the mixing zone because of avoidance

of the thermal plume. In cold climates the heated water may serve as an attractant to some organisms. These effects should be assessed, as should the possible interference with migrations (especially in riverine and estuarine environments).

--Physical/Chemical and Water Quality: The applicant should discuss in site-specific terms, those water quality factors for which the impact on biota may be affected by temperature. For example, increased temperature results in an increase in the rate of biological oxygen consumption in the water and may result in a substantial decrease in dissolved oxygen locally (oxygen sag); decreased gas solubility at higher temperatures can result in local supersaturation and the damaging release of these gases from solution; such compounds as ammonia may be more toxic to biota as the temperature increases.

- Effects on Other Water Uses--The effect of the heated effluent on recreation, public water supplies, industrial water uses, and other existing or proposed cooling water systems also should be discussed in the EIA.

(2) Cooling Lakes. The following factors relative to biological impact should be examined if cooling lakes are selected as a receiving body for thermal effluents in a manner similar to that discussed above for once-through cooling:

- Projected seasonal thermal regimes, vertical and horizontal stratification, absolute temperatures for feasible alternatives
- Physical limnological characteristics in site-specific terms
- Water supply source, effect of water removal
- Projected nonthermal water quality characteristics of the lake
- Expected biota (from literature and historic data)
- Possibility of aquatic nuisance development
- Expected discharge effects on receiving areas
- Capacity for additional units and expected cumulative effects on biota if the plant is expanded

- Potential recreational value

- Expected dissolved solids content in dry years.

(3) Recirculating Cooling Towers, Ponds, Spray Ponds. Although the direct thermal effects from these cooling systems normally are less than from other available cooling modes, the discharge of blowdown and the water intake can have pronounced effects on small or confined waterbodies. If large generating units are proposed and small waterbodies will be used for makeup and blowdown, the applicant should assess the significance of potential impacts and develop appropriate measures to minimize any adverse impacts.

(4) Cooling Water Intake Structures. All of the above cooling water systems usually will involve withdrawal of water from a local body of water to be used as direct cooling water or as makeup water, and the discharge of cooling water or of blowdown. Section 316(b) of the Federal Water Pollution Control Act Amendments of 1972 requires that an applicant demonstrate that the location, design, construction, and capacity of cooling water intake structures reflect best technology available (BTA) to minimize adverse environmental impacts on aquatic biota. The EPA 316(b) guidance manual (US-EPA 1977b) provides general assistance for the development, conduct, and review of surveys designed to assess potential impact of new source intakes. Apart from the 316(b) requirements, the permit applicant should assess all potential impacts associated with a proposed intake structure for purposes of inclusion in the EIA.[9] The applicant must demonstrate a thorough understanding of the site ecology to ensure proper siting and design of the intake and to minimize impingement and entrainment of aquatic biota. At a minimum, the following basic intake design parameters should be discussed in the EIA:

- Location in reference to concentrations of important organisms (various life stages)

- Intake structure length, depth, and distance from shore

- Intake velocities and vectors in relation to waterbody currents

- Number of pumps, volume, and screen mesh size

- Physical structure characteristics

---

9 The identification and evaluation of impacts associated with cooling water intake structures that are presented in the EIA are in no way intended to replace, circumvent, or otherwise avoid Section 316(b) requirements; nor are the EIA guidelines (vis-a-vis assessment of impact of intake structures)

- Specific fish bypass or removal systems

Physical and behavioral barriers to increase avoidance of the intake system by organisms or to mitigate losses are outlined in Section III-B.

Often the single most important factor for reducing intake effects is the location of intake in reference to critical life stages of important local biota. At present there are no commercially tested intake designs available that significantly reduce the entrainment of the larval stages of fish and shellfish, although there are several approaches that offer some promise. Although the use of cooling towers reduces the overall water used in the cooling process, the trend toward increasingly larger units still results in the withdrawal of large volumes of water from the water supply source for makeup. Also, it is important to note that cooling tower water use will result in complete mortality of the entrained organisms. It cannot be overemphasized that the intake structure location should be based on detailed understanding of the local ecosystem, preferably developed from field-derived data. These data should be collected from enough locations in the source waterbody to allow for intelligent choices among alternative locations. The selection of an intake location is critical particularly in estuaries or in other confined coastal environs. Intakes in rivers may have major impacts if located below important spawning areas. The applicant also should consider depth-related data in determining the proper intake location. Critical larval stages of fish and shellfish often are stratified in the waterbody and sufficient field-derived data defining this stratification are essential in deciding among intake locations.

Unfortunately, the reproductive mechanisms of most motile aquatic organisms are understood poorly, and it is usually necessary to acquire detailed field-derived data at an early stage. Current research efforts should provide more insight and credibility for the prediction of impacts from intake structures on the aquatic biota.

(5) Biocide Use. The applicant should provide information sufficient to define the potential impact of the biocide(s) used (if any) on entrained organisms at their point of exposure, as well as any impacts expected beyond the point of discharge. The applicant also should demonstrate the ability of the discharges containing biocides to meet effluent guidelines.

---

contained herein meant to replace or to serve as a substitute for published 316(b) guidance materials. If a 316(b) study has been conducted on the proposed new source, the EIA can address the intake structure impacts by summarizing the results of that study and incorporating the report be reference.

The applicant should examine, at a minimum, the following factors to establish criteria for evaluating potential impacts associated with biocide use:

- Frequency, duration, and concentration of discharges
- Toxicity of concentrations and forms of compounds discharged relative to tolerances of biotic species present in the waterbody
- Potential for formation of toxic levels of reaction products with compounds in the water (e.g., chlororganics)
- Potential for buildup of residuals in sediments.

Currently chlorine is the most commonly used biocide in steam electric generating stations. The standards for the intermittent discharge of chlorine currently are being reevaluated. It is likely that the new standards will be less than the present 0.5 mg/l free chlorine. Moreover, the new standards probably will be time related. The toxicity of intermittently discharged combined residual appears to be significantly less than that of the free residual chlorine and it is possible that standards of chlorine will be formulated based on the relative percentages of the types of residuals present.

II.C.1.b. Water Treatment System. Modern high-pressure boilers require high quality water for makeup and frequently the available water supply must be treated before it can be used for general plant purposes. One or more processes may be required to achieve the quality of water that is desirable. They may include:

- Clarification, which removes suspended solids in the water, usually by settling, often enhanced by the use of coagulants such as iron or aluminum salts and/or polymeric polyelectrolytes. Quality may be further improved by filtration. Major wastes are sludges containing suspended solids from raw water and aluminum or iron hydroxides.
- Softening, which removes calcium and magnesium by precipitation with lime and clarification. Major wastes are sludges.
- Demineralization, which removes dissolved solids in preparation of boiler makeup water by adsorption by anionic and cationic ion-exchange resins. Resins typically are regenerated by removal of adsorbed ions by treatment with sulfuric acid (H_2SO_4) or sodium hydroxide (NaOH). Regeneration and washwater streams have a very high or very low pH and high dissolved solids content and present a waste

disposal problem. Reverse osmosis may be used to produce a low dissolved solids stream before demineralization. This process produces a waste stream that contains high dissolved solids.

II.C.1.c. Boiler Blowdown. Blowdown is practiced to prevent the buildup of materials in the boiler. In modern high-pressure systems, blowdown water normally is of good quality; often it is returned to the water treatment system, because it usually will be of better quality than the water supply.

II.C.1.d. Ash-Handling Water. Coal-fired plants produce both a finely divided ash that is removed from the stack gases by electrostatic precipitators and an ash that is removed from the bottoms of the boilers. Ash usually is disposed of as solid waste, although some fly ash is used for cement manufacture and other industrial processes. Ashes may be transported dry or as a slurry in water. Dry ash transport must have adequate dust control; wet ash transport results in a wastewater containing materials dissolved from the ash. Dissolved materials also can be a problem in leachate from ash disposal sites. Coal ashes can contain significant quantities of:

- Aluminum (Al)
- Iron (Fe)
- Si
- Ca
- Magnesium (Mg)
- Na
- K
- Phosphorus (P)
- B
- Ti
- Trace metals, including Hg, As, selenium (Se), Cd, Cu, Ni, V, and Zn

Table 9 reports the changes in the concentration of several contaminants found in ash pond water. Water that has been in contact with ash may be alkaline or acid and may contain objectionable quantities of some of the foregoing materials; it may, therefore, have a detrimental effect on a receiving body of water. Oil-fired boilers produce much less ash; removal is usually by periodic washing.

II.C.1.e. Stack Gas Scrubber System. Sulfur dioxide in stack gases is most commonly removed by bringing the stack gases into contact with an alkaline lime solution, which precipitates a mixed calcium sulfate-sulfite that then can be disposed of as a solid waste. The water is recirculated, although there may be some blowdown. Scrubbing systems are still under development. Details of these systems may vary considerably, and may or may not include efforts to recover sulfur or sulfuric acid. System design must be based on the individual case.

Table 9. Ash pond overflow water: change in contaminant concentration

Contaminant	Range (lb/MWh)	
Total solids	-31	to + 12
Total dissolved solids	- 2	to + 12
Total suspended solids	- 0.6	to + 0.7
Total hardness	- 0.5	to + 3.7
Sulfate	- 6	to + 2.6
Al	0	to + 0.01
Cr	$- 4x10^{-4}$	to + $3x10^{-4}$
Na	- 0.04	to + 3
Alkalinity ($CaCO_3$)	- 0.9	to + 1.3
Ammonia (N)	- 0.03	to + 0.01
Nitrate (N)	- 0.006	to + 0.04
Chloride	- 3	to + 8
Cu	$- 5x10^{-5}$	to + $2x10^{-5}$
Fe	- 0.005	to + 0.01
Hg	$- 0.4x10^{-6}$	to + $2.8x10^{-6}$*
Ni	$- 2x10^{-4}$	to + $1x10^{-4}$
Zn	$- 4x10^{-4}$	to + $4x10^{-3}$
P	- 0.03	to + 0.0007

*Only two analyses were made.

Source: US Environmental Protection Agency. 1977. Supplement for pretreatment to the development document for the steam electric power generating point source category. EPA 440/1-77/084, April, Washington DC.

II.C.1.f. Miscellaneous Waste Streams. There are other waste streams that are not related specifically to the electric power generation process, but still must be evaluated in the EIA. They include sanitary wastes, plant and yard drains, coal pile runoff, and laboratory wastes. Such wastes could result in potentially signficant impacts to water quality so the applicant should consult the appropriate State, regional, or local authorities about regulations for treatment and disposal of these wastes. The applicant should also discuss in the EIA the method(s) proposed to manage such waste streams.

II.C.2. Intermittent Aqueous Waste Streams

Periodic cleaning of power plant equipment, such as boiler tubes, fireside areas, stacks, cooling towers, condensers, and pre-operational metal cleaning produces wastes that may contain a wide variety of contaminants in quantities sufficient to cause environmental impacts. The composition of these wastes should be identified as well as any potential impacts that are associated with these wastes. At least the following chemical constituents should be investigated:

- Acid, alkaline, detergent, and/or chelating compounds from cleaning solution
- Fe
- Cu
- Zn
- Ni
- Chromium (Cr)
- Phosphates
- Fluorides
- Organic materials

Cleaning is often done by commercial organizations that remove the cleaning wastes from the plant for treatment at some central point, but the wastes may be disposed of at the plant site. Table 10 shows the range in kilograms per cleaning cycle of waste materials in cleaning solutions. The applicant should demonstrate in the EIA how all intermittent waste streams will be handled in terms of treatment and disposal to ensure that all applicable standards and regulations are met.

II.C.3. Air Emission Waste Streams

Air quality analyses must be conducted pursuant to the National Environmental Policy Act of 1969 and the Clean Air Act Amendments of 1970 and 1977. At a minimum, the following principal measures should be included:

- Evaluation of emission rates from all potential air contaminant sources associated with the facility (mobile and and stationary sources)

Table 10. Raw waste flows and loadings: Maintenance cleaning

Item	Wastewater source: Air preheater	Boiler fireside	Boiler tubes
No. of Plants	7	2	7
Cleaning frequency (#/yr)	4- 12	2- 8	0- 2
Flow (1,000 liter)	163- 2,271	91- 2,725	568- 18,622
Parameter (kg/cleaning cycle):			
BOD_5	0- 6.82	0	NA
Bromide (bromate)	NA	NA	NA
COD	2.6- 15.9	8.63-515.00	0.45- 19,387
Cr (total)	0.21- 26.88	0.01- 0.45	0.21- 10,524
Cr^{+6}	NA	NA	NA
Cu	0- 2.02	0- 0.11	0.06-931,185
Cyanide (total)	NA	NA	NA
Fe	0.97- 3,862	13.63-408.90	0.51- 595.96
Ni	8.14-170.38	0- 13.63	42,592-133,826
Oil and grease	NA	NA	NA
Phosphate (total)	0.02- 2.66	0.12- 5.04	0.02- 3.48
Total dissolved solids	1,448-20,096	1,363-15,948	111.11- 43,598
Total suspended solids	217- 4,898	54.07- 1,736	0- 1,590
Total solids	1,188-29,744	1,817-18,551	111.11- 48,868
Surfactants	NA	NA	NA
Zn	0.13- 11.36	0.91- 13.04	0.35-391,098

NA = Not Available.

Source: U.S. Environmental Protection Agency. 1977. Supplement for pretreatment to the development document for the steam electric power generating point source category. EPA 440/1-77/084, April.

- Discussion of the various available and proposed emission control techniques (focus on whether or not the selected control technology constitutes BACT); describe contingency plans to be used if pollution control systems malfunction and those associated impacts

- Where reliable representative data are not available, insurance of accurate measurements of facility performance and emissions, as well as ambient air quality (generally one year of on-site ambient air quality data are needed) and meteorology in the vicinity of the proposed new source power plant before and during operation

- Atmospheric dispersion modeling to evaluate the short- and long-term effects of facility emissions and other neighboring emission sources on ambient air quality (cumulative and synergistic effects)

- Potential for atmospheric chemical reactions that may result from plant emissions, producing new air contaminants

- Discussion of projected ambient air contaminant levels with respect to Federal, State, and local ambient air standards and PSD increments.

II.C.3.a. Sources of Emissions. Potential sources of air contaminants for fossil-fueled steam electric generating stations include:

- Processing plants for fuel and other raw materials

- Materials loading, transport, unloading, and storage facilities

- Combustion equipment (usually the largest source of emissions)

- Fly ash and other waste disposal operations

- Cooling tower drift and salt deposition

- Indirect sources such as increased vehicular traffic generated by use of recreation areas (e.g., cooling lakes) or new residential housing to accommodate plant employees.

Emissions from such sources should be evaluated on source and control equipment design, operating and maintenance factors, and analysis of fuel type. Standard emission factors and manufacturer's test data, when available and reliable, should be used. Significant emissions of all criteria pollutants and other hazardous substances must be quantified. Additional information on particulate emissions may be obtained based on considerations of aerosol mechanics. Contaminant formation rates and control efficiencies for gaseous emissions may be estimated using chemical engineering techniques. Particulate and gaseous behavior must be considered for some emissions; for example, many trace elements such as Sb,

As, Cd, fluorine (F), Pb, Hg, Se, tin (Sn), and Zn are volatilized to varying degrees during combustion, are recondensed as the flue gas cools, and are released both as gases and as submicron condensation particulates that preferentially penetrate through air pollution control devices, whereas the unvolatilized forms are collected efficiently with the fly ash.

Table 11 shows the emission of various toxic metal pollutants from power plants throughout the Nation. Power plants are major (over 20 percent) sources of airborne emissions of boron, beryllium, cadmium, mercury, molybdenum, nickel, tin, vanadium, and zinc.

The emission of heat and moisture from the designed cooling system (i.e., once-through cooling, cooling ponds or cooling lakes, spray ponds, or cooling towers) should be evaluated. Emissions from auxiliary turbine or diesel generators and their operating schedules also should be evaluated.

Construction-related activities also should be analyzed for dust generation and equipment exhaust emissions; emissions should be estimated according to sources such as EPA's Publication No. AP-42, Compilation of Air Pollutant Emission Factors, and expected ambient air pollutant concentrations should be calculated. Dust generation and dispersion from coal piles (active and storage) and construction activities should be estimated based on the appropriate theoretical and empirical relationships of particulate and aerosol mechanics, and on meteorological principles of wind and moisture.

II.C.3.b. Measurement of Air Emissions. The assessment of potential air quality impacts should include requirements for emissions testing and ambient air and stack monitoring, as set forth in the NSPS, as well as programs that will be followed to comply with these requirements. Depending on local regulations, existing ambient air quality, and the extent of control prescribed by environmental management agencies to achieve the desired air quality, some or all of the following measures may be required:

- Performance testing of all combustion and emission control systems after the onset of operations to ensure proper and efficient operation. Faulty operation may result in increased contaminant emissions.

- Emissions testing after routine operation is reached to measure actual emissions, to ascertain compliance with standards and to determine the efficiency of control equipment.

- Continuous monitoring of stack emissions for specific contaminants, such as SO_2, NO_x, CO_2, opacity, and particulates. The rate of fuel use can be monitored and combined with emission data to calculate rates of emission.

Table 11. Estimated emission of toxic metals from conventional power plants

Metal	Coal-fired plants: Tons per year	Coal-fired plants: Percent of United States	Oil-fired plants: Tons per year	Oil-fired plants: Percent of United States
Ba	511	4	NA	NA
As	493	6	2	1.4
Be	99	68	NA	NA
B	3,050	32	NA	NA
Cd	80	27	17	NA
Cr	1,234	10	17	0.1
Pb	750	3-9	NA	NA
Mn	1,622	8	2	NA
Hg	173	28	1	0.1
Mo	610	61	29	3
Ni	33	1	1,441	24
Se	70	9	19	2
Sn	78	22	1	0.3
V	226	1	2,740	15
Zn	3,824	2	130	0.1

NA = Not Available.

Source: Toxic metals: Pollution control and worker protection. Marshall Sittig, Noyes Data Corp., 1976.

- Evaluation of baseline air quality in the vicinity of the proposed facility (required). Levels of ambient air contaminants that are major emission products which will result from the proposed plant operation and related operations must be monitored if other data collected by local agencies or organizations do not provide an adequate description of the local air quality. Existing violations of ambient air standards also should be revealed. After operation begins, monitoring should continue in order to validate air quality projections and to determine whether or not emissions from operation of the plant are in compliance with standards.

- Monitoring of meteorological conditions at the project site before operation begins, to establish the local dispersion climatology and, possibly, to reveal special site dispersion problems with respect to the projected rate and type of emissions and background air quality expected. After operation begins, meteorological conditions can be measured and the data used to explain contaminant concentration levels at ground level air quality monitoring sites.

II.C.3.c. Atmospheric Chemistry. After the various contaminants have been emitted to the atmoshphere, a number of chemical reactions may take place under certain atmospheric and environmental conditions. Because many of the products of these reations are potentially harmful to human health and welfare, the probability of thier formation and the extent of impact expected must be evaluated.

Sulfur dioxide (SO_2), emitted as a product of the combustion of sulfur-bearing fossil fuels, can be oxidized to sulfate (SO_4^{-2}) in a number of ways, both directly and catalytically. This oxidation is favored by the presence of moisture, sunlight, certain metals, hydrocarbons, oxides of nitrogen, and ozone.

Where sulfur dioxide is oxidized to sulfate particles, contact with moisture, whether in the atmosphere or in the lungs, can lead to formation of sulfuric acid and sulfate salts. Through the same combustion process, the emission of oxides of nitrogen often leads to the formation of nitrates. The incorporation of sulfates and nitrates into cloud systems can result in acidic aerosols, mist, and acid rainfall on a regional scale.

Acid rainfall may adversely affect freshwater organisms by reducing pH (increasing acidity) of their environment. A recent survey (EPA, 1978) found that 51% of the lakes in the Adirondack Mountains of New York have pH values below 5.0; 90% of these lakes contain no fish. In contrast, during the period 1927-37, only 4% of these lakes had a pH under 5.0 or were devoid of fish. The degradation is attributed to the inability of the lakes to nutralize acid rainfall.

Acid conditions may result in the leaching of minerals from soil and also may damage various materials, especially metals. Acute and chronic injury also may occur to vegetation, crops, and to the natural ecosystems (up to hundreds of kilometers downwind) as a result of SO_2 emissions which, in turn, can result in transient reductions of live plant biomass. If the fumigations are intermittent, the plant often can recover by increased growth and replacement of damaged tissue. However, if the amount of damaged tissue exceeds 5 to 30 percent (depending on species), productivity or yield may be decreased (Davis 1972; TVA Today 1974).

Subtle long-term effects also are possible, in which the SO_2 interferes with physiological or biochemical processes resulting in effects on growth and possibly on yield without visible symptoms (National Environmental Research Center 1973).

Plant species and varieties show a considerable range of sensitivity to SO_2. This is the result of interactions of environmental (temperature, humidity, light, edaphic factors, etc.), phenological, morphological, and genetic factors that influence plant response. Threshold injury in various plants may be caused by SO_2 concentrations ranging from < 1 ppm to > 10 ppm (National Environmental Research Center 1973).

In addition to acute SO_2 effects, which can result in visible injury to plants wherever they grow, the chronic and long-term SO_2 effects take on added significance in natural ecosystems because of the relative permanence of the vegetation and the delicate balances that exist between ecosystem components. As a contrast, in areas supporting managed agricultural ecosystems where the existing forage or crop plants are replaced by new plants each growing season, the chronic and long-term effects of SO_2 may be negligible.

It is likely that in natural ecosystems subjected to persistent SO_2 levels, annual and perennial plant species would be affected differentially. Chronic and/or long-term SO_2 effects may be manifested as impairment of reproduction and germination which could result in long-term changes in diversity (through elimination of sensitive species), community structure, productivity, stability, nutrient cycling, etc. These changes would, in turn, affect the animal components of the ecosystem via changes in habitat, food availability, competition, etc. These effects would be in addition to the direct effects of SO_2 on animal species and should be evaluated in the EIA to the extent practicable.

Air contaminants formed through atmospheric photochemistry (sunlight-induced reactions) are known as photochemical oxidants because of their roles as harmful oxidizing agents. They are produced through a complex series of atmospheric reactions mainly involving hydrocarbons, oxides of nitrogen, and moisture in the presence of sunlight. Oxidants, which include ozone, also are involved in some of the reactions that produce acid aerosols.

To assess thoroughly the atmospheric impact of emissions from a new facility, the potential for the formation of new contaminants through atmospheric chemistry must be assessed. The emission rates of all relevant contaminants (such as sulfur dioxide, oxides of nitrogen, hydrocarbons, and heavy metals) should be calculated, background levels must be determined, and the atmospheric chemistry must be modeled to project contaminant levels as a function of time and distance from the source.

It is desirable to extend the results of the modeling of impact on air quality to provide an estimate of the impacts on people. At the minimum, it will be desirable to provide tabular data as to the number of people living within the isopleths delineating various levels of increased air contamination.

It is important when assessing the effects of air contaminants on people and the environment to keep in mind that the primary air quality standards are set, as required by law, at a value that will protect the public health with an adequate margin of safety and secondary standards are set to protect the public welfare from any known or anticipated adverse effects of a pollutant. If there is good evidence that the present standards for ambient air contaminants allow levels of any pollutant that will have an adverse effect on public health or welfare, EPA will be required by law to revise the standards downward to a level that will provide an adequate margin of safety. Therefore, these standards can form the basis for discussions concerning environmental impacts of air pollutants.

It also is desirable, however, to attempt to preserve the air quality in regions where present air quality is considerably better than that set as a limit by ambient air standards. To this end, the prevention of significant deterioration (PSD) regulations limit the amount of increase in ambient air contamination in such areas to levels lower than those the ambient air standards would allow.

II.D. OTHER IMPACTS

II.D.1. Electric Power Transmission Systems

Approximately 3,600 electric utilities exist in the United States. These utilities operate more than 300,000 miles of power transmission lines that occupy approximately 4 million acres of land for rights-of-way. Only 2,400 miles (0.8 percent) of these lines are underground.

The assessment of potential environmental impacts that result from the construction and operation of electric power transmission line systems differs from the assessment of impacts associated with the power station proper, because it is necessary to consider narrow corridors of construction that will total tens or hundreds of miles in length for a typical power plant installation, instead of a large central location. Consequently, an applicant may encounter frequent and abrupt changes in topography, soils, vegetation, and other ecological conditions.

To evaluate potential impacts adequately, a comprehensive inventory of existing environmental conditions (within the transmission line corridor and appropriate adjacent areas) is required. The discussion which follows presents a checklist in the form of a sequential outline that may serve as a guide to assess potential environmental effects of power transmission facilities. It is assumed that categories of baseline resource information

required to evaluate environmental effects already have been assembled. Also, where impacts are not unique to power transmission systems, they are discussed briefly or the Federal guidelines (US-EPA 1975) or other appropriate guidance material are referenced.

II.D.1.a. Data Requirements (Description of the Proposed Transmission Facility).

(1) Power Transmission System Layout and Construction. After key natural and manmade resources have been inventoried and appraised, a clear, detailed description of the proposed transmission facility and project implementation plans should be prepared. Specifically, information on the preparation and layout of the alternative transmission routes and sites and a description of the proposed major structures and plans for their installation should be provided in the EIA. Such data are needed to evaluate the appropriateness of the proposed layout(s) and to ensure optimum use of the land and other resources. At a minimum, the applicant should:

- Describe all proposed site clearance and landscape operations. Include activities such as surveying and soil testing, removal of vegetation, grading and excavation, construction of access roads and trenches, stringing of cable, removal and disposal of debris, postconstruction grading and landscaping, and methods proposed to cross waterbodies.

- Describe all plans to mitigate potential adverse impacts of site preparation activities as well as beneficial effects that may result (see USDI 1971, Section A.6.3, p. A.6-6).

- Describe all major proposed structures, including substations, switchyards, transmission line towers and tower pads, terminating structures, and any other special structures. Emphasize facilities visible from public vantage points and scenic areas or any unusual structural features.

- Clearly describe proposed transmission equipment (design voltage, tower design, conductor type, cable type and size, etc.). The description can appear in a table comparing pertinent technical, financial, environmental, and social merits of alternative equipment considered.

- Compare the technical, economic, social, and environmental merits of overhead facilities with underground installations for potentially suitable segments of electric transmission lines.

II.D.1.b. Environmental Impact Considerations. The checklist of information that follows is to be used to identify and to evaluate the potential effects of the proposed transmission line. For each environmental component a distinction should be made between construction and operation (include maintenance activities) phase impacts. Generally there is a direct relationship between the significance of adverse impacts and the areal extent and degree of vegetation removal within the proposed rights-of-way; site conditions also are an important determining factor.

(1) Land Use. Based on the description of present and proposed land uses, the applicant should estimate the impact of the proposed transmission line and associated facilities on these land uses. At a minimum, a discussion of potential impacts should consider:

- Areal extent (acreage) of land to be converted from one land use to another (breakdown by type of land use).
- Possible changes in real estate values in the vicinity of the proposed facility. (This is important particularly when the proposed transmission line is routed through or adjacent to residential or commercial property.)
- Existing and proposed plans, if any, for alternative uses of the site and adjacent lands. (If the plans are incompatible with the routing of the line, demonstrate why the proposed facility should be given precedence.)
- Plans, if any, for concurrent or secondary uses of the proposed right-of-way or site (e.g., utility corridors, transportation or hiking routes, tree nurseries and orchards, recreational facilities, and wildlife management areas) and the suitability or nonsuitability of the proposed facility to accommodate such secondary land uses.
- The potential for future expansions or additions to transmission facilities for each alternative route in terms of land use constraints.

(2) Health, Safety, and Welfare. For electric transmission systems that are proposed in close proximity to the public (e.g., near residences, highways, recreation areas, and other places of assembly) estimate the likelihood and significance of the following potential impacts (see references for detailed guidance):

- Ozone production
- Induced and conducted ground currents

- Noise generation and radio and television interference

- Corona discharges.

Describe employee and public safety standards relative to the construction and operation of the proposed electric transmission system. The applicant should demonstrate compliance with all existing regulations and standards, and describe all proposed measures to reduce potentially dangerous and annoying effects.

Where power lines traverse private property and the applicant only secures ingress and egress rights by nonspecific routes, the applicant should consult with the property owner to ascertain that the remaining access will assure the least personal inconvenience as well as the least environmental damage. The applicant should describe any insurance or other corporate program to provide liability compensation for damages (economic or environmental) to the public, if any should occur, as a result of construction or operation of the proposed transmission facility.

(3) Hydrology and Water Quality. The permit applicant should identify and evaluate the potential impacts to water resources in the area during the construction and operation phases of the proposed transmission facility.

- Construction phase. Specifically, the applicant should:

  --Indicate the location of all water monitoring and gauging stations to be used during construction of the proposed transmission facility.

  --Estimate and describe any discharges to water resources from route clearing and construction activities. Give specific attention to runoff and siltation from possible dredging and/or filling activities, access road construction, and removal of vegetation. Describe specific plans to mitigate these effects (see EPA's Guidelines for Erosion and Sediment Control, Planning and Implementation).

  --For all potentially impacted water resources, estimate any changes in water quality under average and critical low flow conditions from the construction of the proposed transmission system.

  --Describe any potential improvement and/or adverse impacts to the original hydrological conditions of the area because of facility construction (e.g., alteration of drainage patterns and flow conditions).

- Operation phase. Relative to operation and maintenance impacts to water resources, the applicant should:

  --Identify all biocides proposed for use in right-of-way management (vegetation control, pest control, etc.) and describe the potential impacts of the selected biocides on aquatic organisms. For each biocide, specify type, volume, and concentration, mode of application, frequency of use, toxicity to target and nontarget species, and persistence and biomagnification characteristics.

  --Describe any proposed programs to monitor chemical residues in surface and subsurface waters that potentially could be affected. This program is particularly important in areas where herbicide applications or other chemical control is used for land clearing and maintenance.

  --Identify critical areas that are subject to erosion and/or severe overland runoff and describe the measures to be used to control these problems and the resultant impacts.

(4) Air Quality. The applicant should present all relevant data on any atmospheric emissions expected during the construction and operation of the proposed transmission line system and resultant changes in air quality. Because air quality impacts associated with construction activities are not unique to power transmission facilities (e.g., dust generation, noise, and mobile emission sources), the applicant is referred to the EPA general guidelines for new sources to obtain the necessary guidance (US-EPA 1975). In addition to construction-related impacts, the applicant should address air quality impacts that could occur during the operation and maintenance of a proposed transmission line facility. The following considerations should be included:

- For electric transmission lines above 500 kV, the rate of ozone generation and the expected impact on species of plants and animals as well as humans should be estimated. Methods for estimating ozone production can be found in current literature (see Bibliography--ozone generation).

- Right-of-way vegetation control activities which use mechanical methods could generate dust; those which use prescribed burning techniques could generate smoke. If such maintenance practices are planned, the potential air quality degradation, the effects on adjacent areas, and any proposed plans to minimize potential impacts should be discussed.

(5) Noise. Occasionally, electric transmission lines have resulted in public outcry regarding noise generation. Therefore, an applicant should provide appropriate data and related information on possible noise emissions during construction and operation of the proposed transmission line. Assessment of noise impacts primarily should focus on noise-sensitive areas (e.g., those segments of routes that pass through or adjoin residential or commercial property, schools, hospitals, etc.).

(6) Terrestrial Biota. Identify and evaluate the potential impacts to terrestrial ecosystems that may be induced by the construction, operation, and maintenance of transmission line systems. A compilation of pertinent baseline information is required to determine adequately the magnitude and significance of impacts. Depending on the nature of the study area, the type and detail of information will vary. At a minimum, however, the following basis information usually is necessary:

- Summary description (qualitative and quantitative) of the vegetation and habitat types (from baseline inventory) that will be crossed or otherwise affected by the transmission line and associated facilities.

- Inventory of species of animals most susceptible to impact, particularly species that are commercially or recreationally valuable or imperiled.

- Identification of specific right-of-way management practices that could affect terrestrial resources (e.g., the use of chemicals, access roadway maintenance activities, mechanical control of vegetation, and wildlife management practices such as development of food plots, predator control programs, special hunting or trapping regulations).

- Any proposed "special" maintenance practices to be used in environmentally sensitive areas (e.g., wetlands, critical wildlife habitats, unique geologic areas, and archaeological or historic resource areas).

- Summary of the major design characteristics of the transmission lines and other associated facilities (e.g., towers and substations, etc.).

This information should provide the basis to predict the overall effect of construction, operation, and maintenance of proposed transmission lines and corridors on terrestrial species of plants and animals. Specifically, the evaluation of potential effects should include, but not be limited to:

- Effects of herbicides, pesticides, and rodenticides used to maintain and manage transmission rights-of-way and required access roads (see Bibliography--biocide use and effects).

- Effects of nonchemical vegetative control techniques, such as prescribed burns, cutting, and mechanical removal of small trees and shrubs, on wildlife movements and adaptability, soil erosion, plant productivity, wildlife habitats, area carrying capacities, predator-prey relationships, and so forth (see Bibliography--right-of-way management techniques).

- Impacts of increasing accessibility (new roads, trails, open space) to otherwise undisturbed areas (e.g., displacement or emigration of wildlife because of noise and harassment from off-road vehicles (ORV) or human presence, alterations in animal behavior or reproductive success, damage to vegetation by ORV's, and increased erosion).

- Effects of high electrical fields (greater than 765 kV), which may include changes in the physical and biological processes and subsequent behavior and welfare of indigenous terrestrial biota (see Bibliography--electrostatic effects).

- Effects of structures, towers, and lines on aerial migration or movement of avian wildlife, particularly raptorial species and migratory birds (e.g., increased mortality or injury because of in-flight collisions, harmful effects of electrical shock, possible new nesting or resting perches).

- Effects of radiated electrical and acoustical noise, induced or conducted ground current, corona discharges, and production of ozone (with Federal and State standards referenced and discussed as applicable), which may include alienation and out-migration of wildlife and detrimental effects on resident wildlife and indigenous vegetation (see Bibliography--noise and corona effects; ozone generation).

The applicant also should assess and describe the effectiveness and schedule of all proposed plans vis-a-vis the conservation and protection of the terrestrial biota, as well as their conformance with applicable regulations and standards.

(7) Aesthetics. Historically, one of the most controversial aspects of overhead transmission systems is the impact on the aesthetic

quality of the area. The asethetic impacts are unique because of the height of transmission towers, the nature of the right-of-way alignment (long linear clearings, possibly across a variety of land uses), and the unusual design configuration relative to the surrounding area. For this reason, the applicant should:

- Assess (as objectively as possible) the aesthetic impact of the proposed transmission line with specific reference to design plans, sketches, and other relevant materials provided earlier in the EIA (description of existing physical amenities).

- Assess potential impacts with emphasis on the proposed facility as viewed from particularly sensitive vantage points, such as residential areas, lookout points, scenic highways, and waterways.

- Describe measures proposed to minimize adverse impacts created by the facility. Such measures could include alternative design considerations, painting, screening devices, vegetation planting, and changes in alignment.

(8) Other Major Projects/Programs. Often, other projects or programs exist or are proposed in close proximity to the proposed transmission line facility. In this event the applicant should:

- Describe the interrelationships and compatibility of the proposed transmission line system with other existing or proposed structural and nonstructural activities in the area.

- Specify the significance of potential impacts of other projects or programs on the proposed transmission facility and vice versa.

- Describe any proposed plans or procedures to reduce adverse impacts that may occur.

II.D.2. Transportation Impacts

Significant transportation related impacts may be associated with the construction and operation of a new source fossil-fueled steam electric generating station. Some are not unique to the electrical generating industry, but may occur with many large industrial projects. Consultation with appropriate local and regional planning agencies and State highway departments is encouraged and should be useful in planning transportation facilities that involve the public transportation network.

The construction and operation of the principal modes of transportation (for raw materials) and their associated impacts which should be evaluated in the EIA are discussed below.

II.D.2.a. Railroads. Major developments of unit train facilities are required to transport western coal to midwestern markets and to transport Appalachian coal to northeastern markets. The anticipated upgrading of existing equipment and construction of new rail lines and coal handling facilities will produce some impacts on aquatic environments. Presumably a given portion of rail right-of-way is required per 1,000-MWe plant; one estimate is 1,148 acres (Armbruster and Candela 1976), another is 2,213 (CEQ 1973), but it is hard to predict how much, if any, of this would be new right-of-way since a good deal of railroad track is now being abandoned (Armbruster and Candela 1976). Presumably, most of the terrestrial impacts which could occur would result from new construction activities and associated land use problems. Operational impacts on aquatic systems are expected to be small compared to construction impacts.

Construction activities coupled with high annual precipitation in some areas may cause erosion and siltation of the stream beds. Frequently in the mountainous regions of the Northeast, railroads are constructed parallel to stream basins. The stream valleys in this region are quite narrow and railroads may have to be placed close to the stream. The proximity of construction activities to these drainages provides the opportunity for stream bank erosion and disruption of protective plant cover along the stream margins. Removal of bank vegetation that shades the stream may, in addition to enhancing siltation, cause an increase in water temperature (Koppendall et al. 1975). The impact of siltation on aquatic biota may alter benthic communities, fish spawning areas, food web interrelationships, diversity, and/or stability of the biota.

Development of new rail facilities in the western and midwestern sections of the U.S. will likely not cause the same aquatic impacts associated with stream disruption in the Northeast, because the West is semi-arid and location of railways can be planned to avoid paralleling stream basins. However, stream crossings are inevitable and protection from erosion and the effects of siltation on aquatic habitats should be assessed in the EIA as well as a description of all proposed mitigation measures to reduce adverse impacts.

Operational impacts of coal transport by rail are primarily associated with accidental spillage and windblown loss of coal. Some coal dust may blow off car tops, or sift through the hoppers, which then may be swept off the track by train movement or wind. Dusting of vegetation can reduce palatability of forage to animals and, through reduction of photosynthesis, retard vegetative growth. The severity of the problem will be determined by the volume of coal shipped (particularly bituminous coal), whether or not shipments are washed at the mine, whether or not new hopper cars with tight doors are used, and whether or not the use of flip-top covered cars (currently used to prevent snow from accumulating in the

cars) increases. Studies have shown that the impacts from coal dust blown off railroad cars usually are not severe (Armbruster and Candela 1976). It is conceivable, however, that derailing of a unit train might dump about 10,000 tons of coal into a stream basin. If this occurs where the railway parallels a drainage basin, impacts may be significant. Such an accident could affect stream biota locally. In addition to siltation impacts, soluble products may leach from the coal and have an adverse impact on biota downstream. A similar impact also may result from seepage from coal stockpiles located at train loading or unloading facilities. The probability of such accidents and the associated impacts should be discussed in the EIA.

II.D.2.b. Barges and Ships. Primary impacts where the barging and shipping of coal and other raw materials are proposed are associated with construction of dockside handling facilities, construction and upgrading of locks and dams, maintenance of river channels, and the loss of that land required for loading and unloading facilities and dredge spoil piles. There may be some loss of riparian habitat from bank erosion owing to heavy barge traffic in narrow rivers. Barging and shipping of coal in particular is conducted primarily on the inland waterways of the Mississippi drainage basin and the Great Lakes drainage basin. At a minimum, the following should be evaluated in the EIA:

- Exhaust emissions from diesel-powered towboats and ships
- Acceleration of bank erosion from propeller wash and wakes
- Turbidity and sediment from coal spillage in the waterways at coal handling facilities
- Spillage of ship fuel and coal.

Dredging operations, to provide sufficient depth at docks, also may contribute to the sediment load of the waterway and distrub benthic communities. Similar but more extensive impacts will be produced during channel development and maintenance to handle the deeper draft of large jumbo barges. Seepage from coal stockpiles at loading facilities may enter the waterways. Construction of new locks and upgrading of existing facilities also may produce some turbidity and siltation. Shutdown of locks for any appreciable period could limit fish migration to upstream spawning areas, unless facilities for bypassing locks and dams are provided. Therefore, if proposed, the applicant should discuss all aspects of water transportation of coal and other raw materials and all proposed mitigation plans to minimize adverse impacts from construction and operation of this system.

The applicant also should be aware that the issuance of the necessary permits, at all government levels, is contingent on satisfying specific

environmental requirements and on demonstrating that adequate measures to mitigate potentially adverse impacts on the aquatic environment (including disruption or loss of habitat and associated biota, erosion and siltation impacts, and spill hazards) are planned and will be implemented. The EIA should discuss those potential impacts, proposed mitigation measures and demonstrate compliance with all permit requirements.

II.D.2.c. Slurry Pipelines. Although coal slurry pipeline developers have not obtained legal rights to eminent domain, most proponents believe that this right will be granted in the near future. Because hydraulic factors place restrictions on constructing pipelines in mountainous terrain, most proposed pipelines probably will be located in the relatively flat lands of the Western and Midwestern States, where possibly they will transport western coal to eastern markets. The probability of aquatic impacts occurring in the Western States is low as compared to the Northeast due to the semi-arid nature of the western region. However, considerable planning will be required to protect the limited western water resources.

The ecological impacts of coal slurry pipelines can be divided into two categories--impacts of construction and impacts of operation. The first stages of planning a coal pipeline require selection of a route from the mining and preparation area to the market. Selection of a route is critical because a well planned route can eliminate immediately some severe impacts to terrestrial and aquatic habitat simply by avoiding particularly sensitive areas. Lakes, reservoirs, streams, wetlands, and adjacent erodible areas should be avoided wherever practical (Gray and Mason 1975).

In the EIA, the permit applicant should describe, at a minimum, construction impacts resulting from:

- Removal of vegetation
- Acceleration of erosion and surface runoff
- Usurpation of land
- Elimination of wildlife habitat
- Above ground barrier to wildlife movements
- Equipment emissions
- Dust generation.

All measures to mitigate potentially adverse construction impacts (e.g., seasonal timing of construction activities, siltation barriers, revegetation practices, riprapping) also should be described in the EIA.

Potential impacts of operating a coal slurry pipeline primarily are associated with consumptive water use and the accidental discharge of slurry into a local waterway. Consumptive use of water from a well field may produce groundwater-aquifer drawdown and reduce wetland habitat important to both aquatic and terrestrial biota. If the slurry makeup water supply is drawn from a river or stream, drawdown may expose benthic communities in shallower reaches of the basin resulting in their desiccation and elimination from the food web. These types of impacts should be addressed fully in the EIA.

Slurry accidentally released from the preparation plant, pumping stations, or the pipeline may enter a local waterway causing severe turbidity problems due to the fine particles of coal. The probability of such accidents occurring should be estimated and control measures discussed.

Another area of potential aquatic impacts concerns the disposal of excess water from the dewatering system. This water, if of sufficient quality, may be used as part of the cooling water or boiler feedwater at the power plant. Although excess water is discharged to an evaporation pond, it may require treatment and discharge to a local waterway. The nature of this treatment and any resultant impacts should be described.

In general, mitigative measures can be developed to handle the potential impacts of coal slurry pipeline operation. However, the major potential impacts appear to be associated with construction activities, which will require careful planning to prevent ecological impacts. The applicant should document systematically all planning steps for inclusion in the EIA.

II.D.2.d. Trucks. Impacts to both terrestrial and aquatic ecosystems from truck transport will occur primarily as a result of construction activities and maintenance of haul roads. Dust may be generated by blasting, road grading, and use of unpaved roads by construction equipment. After construction is completed, the primary source of air emissions would be the vehicles using the roads. The extent of impact would depend on the number of vehicles, local meteorology, and topography (US-DOI 1975). About 13 percent of the coal used by electrical utilities was moved by truck in 1971. The amount of trace metals, particulates, NO_x, and SO_2 from truck exhaust is considered small (U.S. Atomic Energy Commission 1974), but exhaust emissions from trucks might eventually reach streams, and waste oil or accidental fuel spills could pollute local waterways. Also, there is some possibility that coal spillage and subsequent leaching may result from truck transport.

Noise resulting from construction and use of highways would be highly localized, but should be assessed carefully in the EIA.

Soil erosion and siltation of streams may affect biota or water quality in the stream basins. Mountainous terrain (e.g., the Appalachian Region) is particularly sensitive to erosion. Relatively high annual precipitation,

the occurrence of steep grades, and side hill cutting during construction of haul roads provide the opportunity for erosion and siltation of the numerous headwater streams in this region.

At present, heavier and larger trucks are being employed to transport coal. These trucks require wider haul roads with a heavier base than before. This will present an even greater opportunity for erosion as more area is deforested for construction activities. Effective planning will be required to prevent serious erosion in some areas.

In short, coal-storage yards, maintenance facilities, terminals, and increased road construction, together with their associated land use and ecological impacts, are the major consequences of shipping of coal by truck. The significance of these impacts should be estimated and appropriate mitigative measures should be discussed in the EIA if this mode of transportation is proposed.

II.E. MODELING OF IMPACTS

The ability to forecast environmental impacts accurately often is improved by the use of mathematical modeling of the dispersion and dissipation of air and water pollutants as well as the effects of storm runoff. The sections that follow describe current state-of-the-art modeling techniques that should be considered by the applicant to assist in the prediction of potential air and water impacts.

II.E.1. Air Quality Modeling

Certain physical principles can be incorporated into a mathematical computer model to determine short- and long-term ground level air contaminant concentrations, given:

- Ambient meteorology
- Contaminant emission rates
- Stack characteristics
- Areal extent and frequency of emissions
- Background contaminant concentrations
- Topography.

A plume rise calculation, which yields an effective plume height above the ground, is incorporated into the Briggs model. In some cases, the effect of multiple stack emissions must be considered.

Plume behavior varies with different vertical atmospheric temperature or density profiles (see Figure 3), and may result in several types of ground

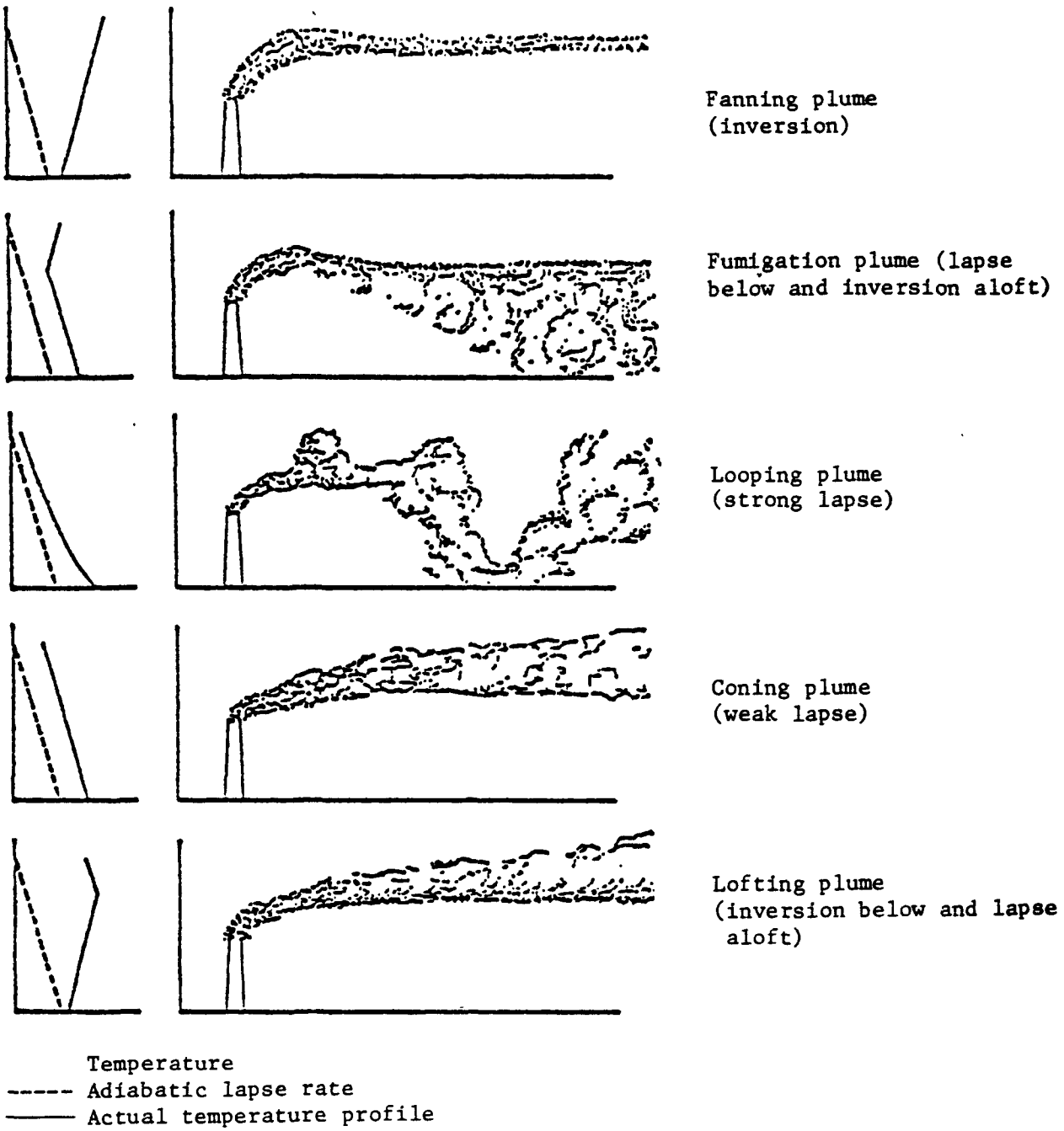

Source: Oklahoma Gas and Electric Company. 1975. Emission study for Oklahoma Gas and Electric Company Sooner Generating Station. Prepared by Brown and Root, Inc.

Figure 3. Effect of temperature profile on plume rise and diffusion

level contaminant concentration patterns. They include:

- Looping, which occurs in an unstable atmosphere (dense, cold air overlies light, warm air). It is characterized by:

  --strong vertical mixing

  --relatively high ground-level concentrations, close to the stack

  --highest ground-level concentrations under rapid mixing.

- Coning, which occurs under neutral conditions. It is characterized by:

  --somewhat steadier ground-level concentrations at greater distance

  --more gradual vertical and horizontal plume dispersion

  --cone-shaped configuration around the axis.

- Trapping (or fanning), which occurs when there is an inversion or stable layer (warmer air) above a ground-based mixing layer (cooler, denser air). It is characterized by:

  --abnormally high concentrations at substantial distances from a single source

  --regional-scale pollution from multiple sources

  --no ground-level concentrations if plume penetrates inversion layer.

- Lofting, which occurs when the plume penetrates through or is emitted above a ground-based inversion (stable) layer; there is no contaminant dispersion to the ground.

- Fumigation, which can cause high ground-level concentrations. This behavior occurs in two instances. In the first, the stack effluent is emitted into a stable atmospheric layer with little vertical or horizontal dispersion, leaving a narrow, concentrated plume shape (fanning configuration). Encountering a layer that is mixed from below, the plume is mixed rapidly down to the ground. Surface heat in the morning hours, when a nocturnal ground-based inversion is destroyed by solar heating (inversion break-up), frequently causes the mixing. The result is sometimes high, usually brief (less than 1-hour) concentrations at some distance from the stack. In the second instance, stable maritime air is transported over a heated surface, creating a ground-based wedge of mixed air that varies in depth with distance from the shore. The resulting plume may affect one area for several hours. Fumigation usually is difficult to model.

- Downwash, which occurs where wind speed is high. It is characterized by:

  --highest local concentrations of pollutants

  --stack effluent entrained in turbulent area of building wake; plume rise destroyed.

Aerodynamic building downwash can be prevented by designing the stack at a sufficient height above any adjacent structure. (The "good engineering practice" definition for stack height has been modified to account for building geometry. Rather than 2.5 times the building height, the definition is 1.5 times the building height plus either the building height or width, whichever is less.) A stack exit velocity exceeding the ambient wind speed prevents loss of plume rise, avoiding stack downwash.

Terrain also affects plume rise behavior. Impingement occurs when the plume is dispersed in an area of rough terrain. Ground-level concentrations normally will be higher if the emission is carried by the wind toward terrain that is higher than the emission site, than those concentrations would be if there were no topographic relief. This effect occurs because the plume axis is nearer to the ground and because the terrain increases turbulent mixing.

Turner's *Workbook of Atmospheric Dispersion Estimates* (EPA Publication Number AP-26) incorporates most Gaussian diffusion calculation techniques; it contains graphic and computation techniques for ground-level contaminant concentrations in most of the foregoing situations. EPA's guidelines on air quality modeling (US-EPA 1977), Brigg's "Plume Rise", and the Federal Guidelines for Air Quality Maintenance Planning and Analysis--Procedures for Evaluating Air Quality Impact of New Stationary Sources are widely accepted references. EPA also has several useful modeling techniques that the applicant should consider where applicable:

- PTMAX, PTDIS, and PTMTP for short-term dispersion modeling of point sources (Note: These programs were developed for short stacks and may give inaccurate results for 1,000 foot stacks proposed for new plants).

- TERRAIN model, incorporating topographic effects

- Climatological Dispersion Model for long-term concentrations over larger areas caused by point and area sources

- HIWAY for indirect source emissions, e.g., vehicle emissions from a recreation area at a cooling lake

- CRSTER.

A number of other factors should be considered by the applicant in modeling:

- Interaction of the facility with neighboring sources and background concentrations derived from regional emission inputs

- Cooling tower dispersion of heat and moisture, to obtain visible plume length and to assess fogging and icing potential and the extent of other meteorological effects (Hanna's modification of Briggs' "Stable Plume Rise Formula," involving latent heat of condensation of emitted water vapor; Gaussian diffusion)

- Salt deposition from cooling tower plume drift, for plants having significant salt concentration in the cooling water

- Interactions of cooling tower plume with sulfur oxides in the stack plume

- Possibility of acid mist formation or precipitation (see discussion in Section II.C.3.c)

- Deterioration.

Deterioration is the total increment in ambient concentration of a contaminant emitted from all sources that were approved after January 1, 1975. If deterioration has occurred since that baseline date, the proposed facility will be allowed a smaller increment than if it were the only contributing source. Rules and regulations concerning deterioration are discussed in Section I.D.1.

After concentrations are calculated, at least the following actions are necessary:

- Compare all criteria pollutant concentrations to applicable Federal, State, and local ambient air quality standards

- Compare hazardous contaminant concentrations to the Occupational Safety and Health Administration's (OSHA) threshold limit values (TLV's)(8-hour working limits, usually a factor of approximately 100 higher than ambient standards)

- Note projected violations of standards or guidelines

- Tabulate the number of people affected by or exposed to significant increases in contaminant levels.

II.E.2. Cooling Water Discharge Models

II.E.2.a. General Types of Models. The various types of models used for estimating the movement of heated water may be arranged in a matrix form (Figure 4). This format follows the representation used by Jirka, Abraham, and Harleman (1976). The matrix can be considered as two separate groupings:

- The method by which the material is discharged and the proximity to the discharge point

- The ambient conditions.

Figure 4. Matrix representation of recommended mathematical prediction models for different discharge modes and types of receiving water.

Types of Receiving Water \ Discharge Mode and Temperature Zone	SURFACE DISCHARGES - NEAR FIELD			SUBMERGED DISCHARGES - NEAR FIELD		FAR FIELD	COOLING PONDS AND RESERVOIRS
	"Deep" Water* (Free jet)	"Shallow" Water* (Bottom attached)	Shoreline Attached Jet**	"Deep" Water* (Free jets)	"Shallow" Water* (Near field instabilities)		
STRONG UNDIRECTIONAL CURRENTS (rivers)	INTEGRAL SURFACE JET MODELS Stolzenbach and Harleman (1971)	"Deep" water integral jet models with correction factor to account for bottom interaction	Integral jet models as a first approximation; consider attachment effects (re-entrainment) in a parametric fashion	INTEGRAL JET MODELS Hirst (1971)	INTEGRAL SHALLOW WATER MODELS (for prediction of average dilution only)	ONE-DIMENSIONAL CHANNEL MODELS: Harleman, Brecard and Mejarian (1973) RELATIVE DIFFUSION MODELS: Brooks (1960)	
WEAK CURRENTS OCCASIONALLY REVERSING (lakes and open coastal waters)	Shirazi and Davis (1974)			As above Shirazi and Davis (1972)	Multiport Diffuser: Harleman and Jirka (1973) Vertical jet in stagnant water	RELATIVE DIFFUSION MODELS: Koh and Fan (1970) - steady state Adams (1975) - transient TWO-DIMENSIONAL FULLY MIXED MODELS Leendertee (1970) Boericke and Mall (1974) Masch et al. (1969) Brasian (1974) Abbott et al. (1973) Losiuk et al. (1972) Codell (1973) Leinkuhler (1974) Tsai and Chang (1973)	
PERIODICALLY REVERSING CURRENTS (estuaries and coastal waters)	As above, but use in a quasi-steady mode			As above, but use in a quasi-steady mode	No model available Use above models for estimate of critical (stagnant) stages	ONE-DIMENSIONAL CHANNEL MODELS: Harleman, Brecard and Majarian (1973) RELATIVE DIFFUSION MODELS as above TWO-DIMENSIONAL FULLY MIXED MODELS as above	
CLOSED BODIES OF WATER							Deep Ponds+ Ryan and Harleman (1971 Shallow Ponds with Stratification+ use steady state models for preliminary estimates Shallow Fully Mixed Ponds+ Edinger et al. (1972) Fully mixed far-field models

*Definitions of "deep" and "shallow" conditions depend on the interaction of discharge dynamics with ambient geometry. Criteria have been provided.

**Criteria have been provided.

+Cooling pond classification is dependent on pond depth and size, discharge dynamics, and heat loading. Criteria have been provided.

Source: Jirka et al. 1976. An assessment of techniques for hydrothermal prediction. Prepared for U.S. Nuclear Regulatory Commission. National Technical Information Service.

For example, through use of a matrix, one could look first at the surface discharges in the near field. These may consist of deep water discharges, shallow water discharges, and shore line attached discharges. Next, submerged discharges could be considered in the near field. These would consist of deep water discharges and shallow water discharges. Far field models then may be considered as well as cooling ponds and cooling lakes. On the other axis, the ordinate, one might look at receiving bodies of water that have the following characteristics:

- Strong directional currents (e.g., rivers)
- Weak currents which may occasionally reverse themselves, such as lakes and open coastal waters
- Periodically reversing currents, such as lakes and open coastal waters
- Closed bodies of water which would include deep ponds, shallow ponds with stratification, and shallow fully mixed ponds.

Recently there have been a number of analyses of the different models of these various types. These modeling guidelines are based primarily on a review of these analyses as well as a knowledge of the individual models.

The most comprehensive and perhaps the most objective analysis is that of Dunn, Policastro, and Paddock (1975) for *Surface Thermal Plumes*. Other current analyses include the MIT Review of Hydrothermal Models (Jirka et 1976) which tends to favor the MIT models; the Parker, Benedict, and Tsai (1975) review of *Mathematical Models for Temperature Prediction in Deep Reservoirs*; and Policastro and Dunn (1978) Review of cooling pond models. Older references which also evaluated some of these models are:

- Benedict, Anderson, and Yandell (1974), *Analytical Modeling of Thermal Discharges: A Review of the State of the Art*
- Shirazi and Davis (1972), *Workbook of Thermal Plume Prediction, Volume 2, Surface Discharge*
- Policastro and Tokar (1972), *Heated Effluent Dispersion in Large Lakes: State of the Art of Analytical Modeling*
- Butz et al., *Ohio River Cooling Water Study* (analyzes three one-dimensional river temperature prediction models)
- Nuclear Regulatory Commission (1976) in Reg Guide 1.113, *Estimating Aquatic Dispersion of Effluents from Accidental and Routine Reactor Releases for the Purposes of Implementing Appendix I* (supports liquid effluent transport and water use models for non-tidal rivers, open coasts, estuaries, cooling lakes, and cooling ponds. Except for far field models where atmospheric cooling is important, NRC models could be used for the estimation of the movement of thermal effluents if heat loss to the atmosphere is neglected.)

II.E.2.b. Modeling Difficulties. Although there is no specific definition of the near field, one might characterize this area close to the discharge point as the region where the characteristics of the discharge and the discharge structure are of greater importance than the ambient conditions. The hydrodynamics of the plume and the particulars of the outfall structure must be considered carefully by the applicant. In this region the densimetric Froude number, the ratio of the ambient to outfall velocities, the bottom slope, and the ratio of the discharge depth to initial water depth are important factors. The surface heat loss is minimal; the primary reduction in temperature is due to dilution. In the far field, diffusion and dilution by ambient turbulence and surface loss are the major means of temperature reduction in this region. The region between the near field and the far field is sometimes called the intermediate field. Generally, existing models are less than adequate for this region. This region is treated when models concern themselves with the entire plume and are called complete field models. To achieve this coverage, they largely ignore the near field conditions or treat them in such a cursory manner that they are of little assistance in predicting impacts to aquatic biota.

II.E.2.c. Modeling Techniques. As stated by Dunn et al. (1975), there are five basic modeling techniques, three of which are applicable to power plants:

- Phenomenological, which correlates jet characteristics such as centerline temperature decay, plume half-widths, and surface isotherm areas with variables such as densimetric Froude number, outfall aspect ratio, bottom slope, and the ratio of ambient to jet velocity from numerous hydraulic modeling and field studies. As long as the phenomenological models are within the range of those previously observed, the methodology is suitable; however, if new conditions are encountered the method may not be of substantial use.

- Integral analysis technique, where the shapes of the lateral and vertical temperature and velocity profiles are predetermined. Then, with entrainment and drag coefficients, the equations of mass, momentum, and energy conservation can be written and solved analytically or numerically. Generally the integrated models solve equations that are less complex than those for the numerical models. Most of the models to date have been integral models which leads to some difficulty because the physical processes such as entrainment, cross flow interaction, buoyancy, ambient-turbulence induced diffusion, and surface heat loss must be simulated in the jet structure. Therefore, it means using a simplified model, with the coefficients tailored to fit field results because the model does not physically explain precisely what is happening in thermal plume interactions. Most models which have been verified are of the integral type. Currently the integral analysis models are the most widely used.

- Differential-numerical method, where the general partial differential equations of motion and heat transport are solved to obtain the velocity and temperature distrubutions. These primarily are finite difference models although occasionally finite element schemes have been used. These numerical models have some advantages over the integral models in that fewer assumptions about the physical phenomena are required. However, the uncertainty as to the form of the diffusion coefficients and the flow and pressure boundary conditions as well as the problem of numerical stability are disadvantages.

The US Nuclear Regulatory Commission (1976) in its recommended models, which may be used in EIA's, (other models can be used if they can be justified), rely primarily on integral models. In any case, the applicant should understand the role and function of all applicable models. Perhaps the final conclusions from Dunn et al. (1975) might be useful in this respect, "It is concluded that of the models (surface thermal plumes-added) so far compared with prototype data, none has been shown adequate over a wide range of conditions. Moreover, available models were found useful for only generalized estimates of plume characteristics; precise predictions are not currently possible." (P. 442)

> This conclusion was reached through comparison of model predictions with laboratory and field data. Comparisons with laboratory data enable one to test the validity of the model within the geometry and conditions assumed in model development. Comparisons with field data indicate the extent to which prototype effects not accounted for in model formulation limit the utility of the model. The major reason for the generally poor performance of the existing models seems to be a limited understanding of plume physics. An important related reason is the inadequate assumption that plume characteristics are controlled by discharge parameters alone. Experience has shown that prototype plumes are controlled partly by discharge parameters and partly by the nature and history of the receiving water body. The effects of ambient turbulence, boundary 'bottom and shore line' interference and wind induced shear currents are often omitted in the formulation of mathematical models. These effects are clearly not second order. Models that do not identify and correctly treat the key physical mechanisms can not be expected to predict reliably. Additional basic studies are needed to understand these phenomena and their interrelationship with buoyancy and entrainment and thereby provide a more sound basis for model development. [The abstract notes] . . . the available models, in their present state may be used to give only general estimates of plume characteristics; precise predictions are not currently possible. The predictions show roughly a factor of 2 accuracy in centerline distance to a given isotherm, a factor of 2 accuracy in plume width and a factor of 5 accuracy in isotherm areas. The state of the art can best be improved by pursuing basic laboratory studies of plume dispersion along with further development in numerical modeling techniques.

The above comments apply to surface discharges only. For submerged discharges no comparable analysis has been undertaken although the MIT report (Jirka et al. 1976) presents comparable results as indicated in "Conclusions Recommendations":

> It is found that under the present state of the art no single technique can be used to yield a comprehensive prediction of the entire temperature field. This restriction stems from the difficulties of representing the variety of transport processes which govern the heat distribution in open and confined water bodies in a single analytical or experimental technique. Thus reliable techniques are zoned models only and a careful integration is necessary to provide complete predictions of the temperature field.

After citing a number of restricitons, they conclude,

> Despite these restrictions, it may be stated that the overall state of the art in mathematical modeling of heated discharges is sufficiently advanced and reliable estimates of the temperature field in most practical applications are possible. If prototype conditions are outside the limits of applicability of any particular mathematical model then, parametric sensitivity studies may be performed.

Possibly the most ambitious model under development now is that of Eraslen (1977) who is attempting to develop a unified tranport approach for the assessment of all power plant impacts.

In short, the permit applicant must determine carefully which model to use. It is well known that some models appear to give reliable results only when used by the original developer of that model. In any case, caution should be taken to use the models only in the region for which they have been verified. As noted in Dunn et al. (1975) few of the numerical models have been verified adequately to date.

Most of the major shortcomings of these models are that none of them consider the chemical transformations that take place along with the physical changes nor do they incorporate the biological changes that also take place. Some of the models have been modified so that they will determine the time of transport of the organisms through the various temperature zones, assuming that the flow is uniform. There appears to be only one model that currently is available for predicting the chemical changes in the chlorine from blowdown from cooling towers. The model has been developed by M. H. Lietzke (1977a; 1977b).

II.E.2.d. Recent Studies. A recent summary of current modeling efforts was presented at the Conference on Waste Heat Management and Utilization, May 9-11, 1977, at Miami Beach, Florida (LEE et al. 1977). The proceeding's volumes give an indication of the types of models that currently are being used. There is, however, in the LEE reports little comparison of existing models. The reports primarily consider individual models of different investigators. Of particular relevance was a paper presented by G. S.

Rodenhuis, "Numerical Models in Cooling Water Circulation Studies: Techniques, Principal Errors, Practical Applications." The paper addresses the problems that develop in coupling the near field and the far field models, and coupling the actual plume and near field model.

The conference proceedings emphasize the necessity of the modeler being aware of all the inaccuracies inherent in each type of model, the advantages and disadvantages of each, and the relative magnitude of the errors in each particular system. He should be aware of the models (although limited) that have been verified and widely used and tested against their predicitons.

II.E.2.e. Recommended Models. Currently, the models recommended for use are those evaluated in the various META-type analyses. Dunn et al. (1975) recommend the use of the Shirzai/Davis surface discharge model and the Pritchard number 1 model for surface discharges. Wide-ranging familiarity with the Motz/Benedict model and its deficiencies, and the wide use to which it has already been put, make it useful for consideration as an alternative.

In the Ohio River cooling water study (Butz 1974), one-dimensional river temperature prediction models were evaluated. The three evaluated were COLHEAT (HEDL Environmental Engineering 1972), Edinger-Geyer (Edinger-Geyer 1965), and Stream (ORSANCO 1972). The criteria for selection: (1) compared the average daily 1964 water temperatures predicted by the model with the actual 1964 average daily water temperatures observed at four water temperature stations, (2) compared how quickly the user learned to implement the model and how easy the model was to use, (3) compared how difficult it was to obtain the data necessary to run each model, (4) compared the theoretical completeness of each model and the validity of the assumptions in each model. The COLHEAT model predicted the temperatures more accurately than did the other two models. It was noted, however, that the COLHEAT model tended to predict higher temperatures than actually were measured when the river was warmest. Stream was the easiest model to use and all models were judged approximately equal in ease of input data acquisition. The COLHEAT model also was most theoretically complete. Based upon these criteria, Butz concluded that the COLHEAT model was most appropriate for use at that time for river temperature prediction on the Ohio River.

In general, there still is concern about the use of the exponential decay of heat in all of the models. This methodology tends to give higher temperatures downstream than actually observed. The problem is very difficult because at the points of interest the temperature differences are very small. They are so small that at times they are less than the temperature differences at discrete points in that cross-section. For example, the water temperature near the shore may be several degrees higher than the water temperature in the center of the stream. The water temperature at the surface may be several degrees higher than the water temperature below the surface even in relatively well mixed rivers. Until it is possible to describe this motion physically, it will be difficult to describe it mathematically, and to arrive at correct predictions. Further work needs to be done for the FAR Downstream River temperatures. Another problem common to all these models is that they are designed for steady state conditions whereas plant output, river flow, and meteorological conditions are constantly changing.

It is unlikely that a steady state model can provide accurate values downstream.

Other applicable models are:

- Submerged discharges
  --Shirazi/Davis model and Shirazi/Davis/Byram (Shirazi et al. 1973); modifications to the Hirst model (Hirst 1971).

- Cooling lakes
  --Parker/Benedict/Tsai model (Parker et al. 1975) and the MIT model (Ryan and Harleman 1971)

- Cooling ponds
  --Ryan/Harleman model (Ryan and Harleman 1973)

- Estuarine areas
  --Harleman /Broeard/Najarian model (Harleman et al. 1973).

Although these models listed currently represent the state-of-the-art, the applicant should consult the appropriate EPA officials about the status of impact modeling techniques and the reliability and applicability of specific models to the proposed new source facility.

III. POLLUTION CONTROL

III.A. STANDARDS OF PERFORMANCE TECHNOLOGY: IN PROCESS CONTROLS, WATER, AIR, SOLID WASTE

Selection of optimum water reuse and pollution control alternatives can result in the reduction of waste streams and their associated impacts. The following sections briefly describe the application of in-process control measures for the major waste streams considered in Section II.C.

III.A.1. Water Treatment Wastes

- Because boiler blowdown normally will be higher quality than the water supply, recycling blowdown to the water treatment system input will reduce the waste load.

- Ion-exchange demineralization wastes are strongly acid or alkaline. It may be possible to reduce the amounts of these wastes by using reverse osmosis to accomplish most of the demineralization and to use ion-exchange only to polish the reverse osmosis output. Although reverse osmosis produces a waste stream high in dissolved solids, the wastes are less objectionable than those from ion-exchange demineralization.

III.A.2. Ash-Handling Water[10]

The standards of performance for new sources for the steam electric generating category state that there will be no discharge of suspended solids from fly ash transport water; this limit dictates that there shall be no discharge of ash-handling water, because no end-of-process treatment could remove all suspended solids. In-process designs that can meet this standard include:

- Use of dry ash-handling systems in place of wet systems

- Recycling of ash-handling water with evaporation, or reuse of any required blowdown

- Treatment and reuse of ash-handling water

- Possible use of fly ash as a cement additive.

Of these alternatives, the dry ash-handling system probably is the most widely applicable, but the others may be applicable in select cases. For each treatment method considered, the applicant also should investigate possible energy conservation opportunities as well as overall efficiency.

---

10 Per the 4th Circuit Court of Appeals remand, standards of performance for dry ash handling systems are being reviewed. The permit applicant should consult with appropriate EPA officials on the current status of these regulations.

III.A.3. Coal Pile Runoff

In-process modifications to reduce coal pile runoff wastes include design of storage areas so as to minimize the area subject to rainfall by diverting away from the coal pile any runoff from other areas and by covering inactive coal storage areas.

III.A.4. Stack Flue Gas Scrubber Systems

Various scrubbing processes are available and others are being developed. The applicant should consider a system that will maximize the amount of water recycled in order to reduce discharges. Other selection criteria should include efficiency, reliability, and economics.

III.A.5. Cooling Tower Blowdown

The amount of cooling tower blowdown can be reduced by the use of a higher concentration cycle. Softening of the cooling tower makeup water may be a feasible method to reach higher concentration in certain circumstances.

III.A.6. Miscellaneous Waste Streams

The most widely applicable in-process modification to reduce miscellaneous waste streams is to ensure segregation of the streams that are clean and that can be discharged without harm, in order to reduce the volume of water that must be treated by end-of-process methods. Efficient housekeeping practices and dikes around potential spill areas can allow direct discharge of drain water that otherwise might require treatment.

III.A.7. Air Emission Abatement Systems

Possible in-process modifications to reduce air polluting emissions principally include combustion modifications to reduce nitrogen oxides in the stack gases and the use of low-sulfur coal.

III.A.8. Solid Wastes

Major sources of solid wastes are ashes and sludges from water treatment and stack-gas scrubbing. In-process modifications are not practiced to reduce these wastes. Therefore it is important that the proper choice of processes be made initially.

III.B. STANDARDS OF PERFORMANCE TECHNOLOGY: END-OF-PROCESS CONTROLS, WATER STREAMS

III.B.1. Chemical Pollutants

Major pollutants encountered in most power plant wastes are metals, suspended solids, oil and grease, and chlorine. All these can be reduced by a process of oxidation, neutralization, and settling (or skimming). Thus effluent guidelines standards are based largely on:

- Combining low-volume streams
- Raising pH to neutral or slightly alkaline values
- Allowing sufficient time for chlorine to dissipate and for iron to be oxidized to a +3 state
- Removing settleable solids and floating materials in a settling pond.

In the more arid sections of the country, evaporation ponds are used to reduce potential environmental impacts. If the ponds can be made sufficiently impermeable to prevent contamination of groundwater supplies, they are the most effective method available for disposing of a number of wastes, particularly high solids wastes from water treatment processes. The applicant should include plans for ultimate closure of the pond and for preventing contamination when pond use is terminated.

III.B.2. Heat

Heat is a particularly troublesome pollutant in power plant operations because of the large amount that requires disposal. Historically, power plants used once-through cooling water to dispose of heat into a nearby body of water. When the potential for damage to the aquatic resources from excessive amounts of heat was recognized, however, water quality standards were implemented for temperature, thereby making such a disposal method impractical in many situations. Several alternatives to once-through cooling systems are available, each of which should be evaluated carefully before selection of the proposed cooling method.

The following types of cooling systems have been used commercially:

- Evaporating (wet) cooling towers, mechanical or natural draft
- Dry cooling towers (closed systems)
- Hybrid cooling towers (a combination of wet and dry)
- Cooling lakes and cooling ponds
- Spray ponds and canals.

The use of these cooling techniques, however, does not offer a panacea to environmental problems. The applicant should evaluate systematically the appropriateness of each method relative to the proposed facility, site-specific conditions, costs, and other pertinent factors. The major advantages and disadvantages of each are outlined below.

III.B.2.a. Mechanical Draft Evaporating Cooling Towers. Air is moved by fans over falling water droplets, so the water is cooled by evaporation. Major advantages include:

- Effective control over air movement and water temperature
- Lower capital costs than for natural draft towers.

Major disadvantages include:

- Potential blowdown disposal problems
- High maintenance and power costs (fans consume up to 0.8 percent of power station generating capacity)
- Potential icing and fogging problems
- Possible mixing of vapor and stack gases
- Potential environmental problems associated with dissolved solids in drift losses.

III.B.2.b. Natural Draft Evaporating Cooling Towers. Cooling is by the same mechanism as mechanical draft towers, but air is moved by natural draft by means of a tall chimney structure. Diameters and heights typically are about 500 feet. Major advantages include:

- No fans are required so operation and maintenance costs are lower
- Less land area is required than for mechanical towers
- Lower drift rate than mechanical towers.

Major disadvantages include:

- Potential for blowdown disposal problems
- Higher capital costs than for mechanical draft towers
- Potentially disturbing aesthetic impact from height of towers
- Possible mixing of vapor and stack gases.

III.B.2.c. Dry Cooling Towers. Air is drawn over fins on tubes which act as conduits for the heated water. Dry cooling towers eliminate water-related problems, including the need to locate near a large waterbody; however, their use for large plants has been minimal owing to:

- High capital cost (two to three times that of wet towers)
- Maintenance problems

- Reduction in power plant efficiency caused by higher condensing temperatures.

III.B.2.d. Hybrid Cooling Towers. Hybrid cooling towers use both wet and dry operations. They are intermediate in cost between wet and dry towers, and have fewer plume (icing and fogging) and blowdown problems than wet towers.

III.B.2.e. Cooling Lakes and Cooling Ponds.[11] Large cooling lakes and cooling ponds can be used to dissipate waste heat through evaporation, radiation, and conduction. Major advantages of these cooling systems include:

- Little or no blowdown except in hot, dry areas
- Capital costs usually are lower than those for cooling towers
- Operation is possible for extended periods without make-up water
- Cooling ponds (distinct from lakes) can serve as settling basins to reduce chlorine and suspended solids
- Cooling lakes can be multipurpose (i.e., cooling, recreation, flood control, flow regulation).

Major disadvantages include:

- Land requirements (1 to 2 acres/MW)
- Potential seepage, icing, and fogging problems
- Collection basin for wind-blown debris may develop weed and algae problems
- Potential problems associated with dissolved solids build up during dry years.

III.B.2.f. Spray Ponds and Canals. The addition of spray reduces cooling pond area, but increases fogging and icing problems and operation and maintenance costs.

III.C. STANDARDS OF PERFORMANCE TECHNOLOGY: END-OF-PROCESS CONTROL, AIR

Fuel combustion for electric power generation results in emission of sulfur oxides, nitrogen oxides, and particulate matter or fly ash. Other emissions which lately have earned considerable interest are trace elements and radionuclides (Klein et al. 1975a, 1975b; Cuffe and Gerstle 1967). The EPA has enacted New Source Performance Standards which place limitations on SO_x,

---

11 See footnote 1, page 11 for definitions of these terms.

NO_x, and particulate matter emissions from fossil-fueled fired power plants. State and local air quality and emission standards also may be imposed. To comply with these regulations, the operator of a new source power plant has available a wide array of air pollution control devices and techniques to reduce emissions to within allowable levels. The various pollution control technologies differ in efficiency, reliability, cost, and operational problems. The following is a discussion of the major emission abatement methods that should be considered by the applicant. The methods currently are considered technologically feasible and are in an advanced state of development or sufficiently well developed to gain some acceptance within the industry.

III.C.1. Particulate (Fly Ash) Control

III.C.1.a. Electrostatic Precipitators. Electrostatic precipitators are used conventionally for control of particulate emissions in coal-fired electric generating stations. They consist of a chamber through which passes the flue gas containing entrained ash particles. These chambers contain flat parallel plates from 6 to 12 inches apart, with rod or wire electrodes between them. A high voltage is applied to the electrodes, the wire or rod serving as the negative discharge electrode and the grounded collection plate as the positive electrode. A direct-current, high-voltage corona is established in the interelectrode space around the discharge electrode, ionizing the molecules of electronegative gases such as O_2, CO_2, and SO_2 present in the flue gas. Under the action of the electrical field, the gas ions move rapidly toward the collecting electrode and transfer their charge to the particles by colliding with them. Once the charged particles are in the electric field, they are directed toward the collection electrode, where they are deposited, the magnitude of the force depending on the particle charge and the intensity of the field. The accumulated dust is removed from the collection electrode by rapping at intervals to dislodge the deposit. It is then collected in a hopper underneath the electrode compartment to await removal and ultimate disposal (US-NRC 1977).

High overall mass collection efficiencies (> 99 and up to 99.9 percent) can be achieved at a low pressure drop through the precipitator and at a low power requirement. The amount of fly ash (0.4-1 percent of the total fly ash) which escapes the precipitator is smaller than 1 or 2 microns in size. Recent tests have shown that fractional collection efficiency, however, depends on fly ash resistivity, which in turn is determined by flue gas temperature and the sulfur content of the coal being burned. Low-sulfur coal produces a high-resistivity fly ash that reduces the collection efficiency at temperatures typical of conventional cold precipitators, which operate near 300°F (Gottschlich 1968; Baruch 1976; Phelan et al. 1976).

This difficulty may be circumvented by use of hot precipitators, which operate at 600°F or more and give high collection efficiencies that are insensitive to coal sulfur content. The higher operating temperatures are achieved by placing precipitators upstream of the air heater rather than in the downstream position typical for cold precipitators. The use

of hot precipitators is increasing owing to the current dependence on low-sulfur coals (Henke 1970; Walker 1974).

III.C.1.b. Wet Scrubbers. Wet scrubbers generally remove particles by impacting them with water droplets. However, particle collection in wet scrubbers currently in use may involve three mechanisms: inertial impaction, interception, and diffusion. Particles larger than about 1 micron in diameter (the diameter of the collector droplet) are collected primarily through inertial impaction, while particles of 1 micron are collected through interception. Diffusion into the collector droplet governs the collection of particles smaller than about 0.1 micron. Particles in the size range of 0.1 to 1 micron normally are the most difficult to collect, as is the case with other collecting devices (Southern Research Institute 1975).

Removal of particulate matter may employ any of the following types of scrubbers: plate column, packed-bed, preformed spray, gas atomized spray (e.g., Venturi scrubber), centrifugal, and moving-bed. For power plant application, the most widely used types are the Venturi and the moving-bed scrubbers.

- Venturi Scrubbers--The Venturi scrubber achieves fly ash or particulate matter removal by bringing together the liquid and the fly-ash-bearing gas in a region of high-velocity gas flow (Venturi throat). The moving gas stream atomizes the liquid into drops and, in the process, accelerates the drops. Venturis have a nominal efficiency of 99 percent and are capable of fly ash removal down to 0.02 gram per standard cubic foot with pressure drops across the scrubber of 10 to 15 inches of water and a liquid-to-gas ratio of 10 to 15 gal/1000 cubic ft for typical particle-size distributions and dust loadings. Flue-gas velocities are in the range of 200-400 feet per second (fps) to produce a high relative velocity between gas and liquid collector droplets, thus promoting the collection of particles. Inertial impaction generally is considered the predominant collection mechanism in Venturis (Southern Research Institute 1975).

- Moving-Bed Scrubbers--In a moving-bed scrubber a zone of mobile packing, usually consisting of a bed of plastic or glass spheres, allows intimate contact between gas and liquid. A perforated plate held within a cylindrical shell supports the movable packing. The gas passes upward through the packing, while the liquid usually is sprayed downward over the bed of spheres. The spheres suspended in the gas

[12]This trend toward the use of low sulfur coal could change because revised new source performance standards now require a sliding scale percentage reduction in SO_2 for all coal burned.

stream enhance turbulence, and therefore gas-liquid contact, in addition to keeping the packing elements clean. Moving-bed scrubbers also are used for removing part of the SO_2 in addition to particulate matter, because mass transfer is favored by long residence time. This is in contrast to Venturi scrubbers, which are poor in SO_2 removal owing to the high gas velocities. High particle-collection efficiencies have been reported ranging from 98.7 to 99.9 percent at gas velocities of 8 to 10 fps, total pressure drops of 5.5 to 10 inches water, and liquid-to-gas ratios of 32-80 gal/1000 cubic feet. A nominal overall efficiency of 99 percent may be assigned but, in general, higher pressure drops give higher overall removal efficiencies (Southern Research Institute 1975).

- Fabric Filters--Fabric filters, usually in the form of baghouses, remove particles by filtering the gas through a porous flexible fabric. Glass fibers have proven to be more suitable than other natural fibers or synthetics for filter fabric because of their greater resistance to the combined action of heat and sulfur oxides in fly ash collection. Protective coatings of silicones, graphite, fluorocarbon polymers, and others have extended the life of glass fiber fabrics at flue gas temperatures (Southern Research Institute 1975). The mechanisms of particulate collection with fabric filters--impaction, interception, and diffusion--are similar to those in scrubber operations. The nature and extent of the collecting surface in a fabric filter, however, change with the buildup of the layer of collected particles from one cleaning to the next. The accumulation of particles on the fabric causes a larger resistance to gas flow and a greater pressure drop. The differnces in the method of cleaning distinguish the various types of baghouses, e.g., shaker type, reverse flow, reverse jet, and reverse pulse (Ottmers et al. 1975). Typical baghouse collection efficiencies are greater than 99.9 percent for gas pressure drops of 2 to 5 inches of water.

III.C.2. SO_x Control

The permit applicant should consider a number of near-term options for air quality control systems which have been developed or are in the process of being developed to meet SO_2 emission standards of coal-fired power plants. These include use of flue gas desulfurization either alone or in combination with low sulfur coal or coal benefication.

III.C.2.a. Low Sulfur Coal. Use of low sulfur coal cannot, by itself, satisfy the new source performance standards for electric utility steam generating units because at least a 70% reduction in potential SO_2 emissions has to be realized regardless of the sulfur content of the coal burned. However using low sulfur coal at a site may be advantageous because it could reduce operating and maintenance costs and solid waste disposal problems of flue gas desulfurization.

III.C.2.b. Coal Beneficiation. Coal beneficiation consists of crushing the coal and separating the heavier pyritic-sulfur-bearing particles (3 1/2 times as dense as the coal itself) from the lighter coal by physical or mechanical means. Organic sulfur cannot be removed by beneficiation and therefore places a limit on sulfur removal. The process of beneficiation also can significantly reduce the ash content of coal as well as the levels of trace heavy metals (US-DOC 1975).

Sulfur reduction can be as high as 46 percent depending on the level of beneficiation. Ash reduction can be as much as 65 percent, increasing the net heating value of the coal as much as 20 percent and decreasing the sulfur content by 55 percent on a Btu basis.

III.C.2.c. Flue-Gas Desulfurization. A flue-gas desulfurization system may be classified as a "throwaway" system because it produces a waste sludge byproduct, or as a "regenerable" system because it regenerates the sorbent and produces sulfuric acid or a sulfur byproduct. Four of the most developed control systems are: (1) lime/limestone scrubbing, (2) double alkali scrubbing, (3) magnesia scrubbing, and (4) the Wellman-Lord process. The first two are throwaway systems whereas the last two are regenerable. These four systems represent approximately 90 percent of the systems in operation or under construction, with the lime/limestone scrubbing processes receiving the widest application (Ottmers et al. 1975; US-DOC 1975).

- Lime/Limestone Scrubbing--In this process, the SO_2 in the flue gas comes in contact and chemically reacts with a recirculating lime or limestone slurry in the scrubber to form a precipitate or sludge. Sulfates are formed through oxidation of sulfites. The reacted lime or limestone slurry from the scrubber goes to the reaction tank where calcium sulfite and calcium sulfate precipitate as hydrated solids upon addition of fresh lime or limestone. To avoid the buildup of solids in the system, a portion of the slurry from the reaction tank is sent to a solid liquid separator which may be a centrifuge, a filter, or a holding pond. The waste sludge composed of calcium sulfite, calcium sulfate, and fly ash is withdrawn to a disposal area while the liquor is returned to the process. Makeup water is added to the process to compensate for evaporative losses and water lost with the waste sludge. The cleaned gas is reheated above its dew point and released through the stack. In lime/limestone scrubbing processes, the fly ash may be collected separately or processed with the scrubber slurry. Of the flue-gas desulfurization systems, the lime/limestone scrubbing processes are the best-developed and are capable of more than 90 percent SO_x removal from flue gases of coal-fired power plants (US-DOC 1975; Kim 1974).

- Double Alkali Scrubbing--Similar to the lime/limestone scrubbing processes, the double alkali process generates a solid waste of calcium sulfate. SO_2 in the flue gas reacts with the sodium sulfite (Na_2SO_3) liquor as follows:

$$SO_2 + Na_2SO_3 + H_2O \rightarrow 2\ NaHSO_3$$

The spent scrubber effluent is then regenerated with lime/limestone scrubbing process, but makeup water and alkali are first added to the separator effluent liquor before being recycled to the scrubber. Soluble sodium sulfate (Na_2SO_4) is removed from the process through a liquid purge stream. Double alkali scrubbers have been reported to achieve an SO_2 removal efficiency of 90-97 percent depending on the molar ratio of lime or limestone to SO_2 (Lamantia et al. 1975; Cooper 1975).

- Magnesia Scrubbing--Magnesia scrubbing is a regenerable process which uses a magnesium sulfite ($MgSO_3$) slurry to react with the SO_2 in the flue gas. The spent scrubber liquor is regenerated with magnesium oxide (MgO). MgO is regenerated by concentrating a part of the magnesium sulfite ($MgSO_3$) slurry in a solid-liquid separator, drying the concentrated solid, and calcining the dried solid to form MgO and SO_2. The SO_2 is recovered by being sent to a sulfuric acid plant to produce 98 percent H_2SO_4. Makeup water is necessary to replace evaporative losses in the scrubber and dryer and for particulate solids disposal. No reliable data on SO_2 removal efficiency have been obtained for full-size units (US-DOC 1975).

- Wellman-Lord Process--The Wellman-Lord process uses a sodium sulfite (Na_2SO_3) liquor to react with the flue-gas SO_2. The spent liquor then is thermally regenerated in an evaporator/crystallizer. Water from the gas stream emerging from the evaporator/crystallizer is recovered by means of a condenser and separated from the SO_2-rich gas stream before being returned to the scrubbing loop. The regenerated sulfite slurry joins this condensed water, the makeup alkali, and the makeup water to serve as scrubber feed-liquor. The SO_2 is recovered in a sulfuric acid plant. Because of oxidation of some sulfite to sulfate, a sulfate purge stream is required. Water losses due to this purge stream and due to evaporation in the scrubber are compensated by makeup water. No reliable data on SO_2 removal efficiency have been reported (US-DOC 1975).

III.C.2.d. Coal Beneficiation Combined with Flue-Gas Desulfurization. Often, sulfur removal through beneficiation is not sufficient to permit the direct burning of coal under applicable emission standards. However, beneficiation coupled with flue-gas desulfurization (FGD) reduces the demands on a FGD system, resulting in capital and operating cost reduction. In addition, beneficiation reduces ash content, increases the calorific rating of the coal, and, if done at the mine site, substantially reduces shipping costs. Beneficiation prior to flue-gas scrubbing reduces the quantity of sludge gnerated at the power plant site, shifting the burden of solid waste to the mine site where it is more amenable to disposal.

III.C.2.e. Intermittent Control Systems. The strategy of intermittent rather than continous emission control may be a more cost-effective technique for compliance with emission standards (Yeager 1975) when the aim is to control short-term groundlevel concentrations of SO_x near the source, rather than overall emissions. During normal or favorable meteorological conditions, the intermittent emission control technique relies on the relationship between ambient air quality and stack height at which SO_2 emission occurs for the diffusion of the pollutant well above ground level. During unusual or unfavorable atmospheric conditions such as inverison, either of two emission abatement methods may be resorted to: (1) fuel switching (temporarily burning a supply of low-sulfur fuel) or (2) load switching or assigning a portion of the electrical load to another generating station that has available capacity and can comply with emission standards.

Because atmospheric dispersion rates vary widely, reliability of an intermittent control system (ICS) to meet air quality standards greatly depends on the accuracy of air quality forecasting, design of control system, and dependability of system components. Constraints on ICS implementation include local weather, terrain, stack height, and emission parameters. Economic considerations connected with modifying the coal handling, feeding, and firing systems of power plants to permit switching to low-sulfur coal also are included in determining the feasibility of implementing an ICS.

Capital and operating costs for an ICS are significantly less than for an FGD system but the use of the ICS for meeting all SO_2 ambient air quality standards has not been demonstrated (Yeager 1975; US-DOC 1975).

III.C.3. Nitrogen Oxide (NO_x) Control

Coal combustion remains as the largest stationary source contributor (42 percent) to NO_x emissions (Brown et al. 1974). Coal contributes 63 percent of the NO_x emitted from electrical power generation. NO_x formed in combustion originates from two distinct sources:

- The thermal fixation of atmospheric nitrogen in the combustion air to form NO_x, made possible by the high temperatures in coal-fired furnaces

- NO_x production from the conversion of chemically bound nitrogen in the coal.

A number of NO_x control options have been studied in the past, including the use of synthetic fuels, fuel additives, fluidized-bed boilers, and flue gas treatment, but modification of the combustion process may be the most viable means of reducing NO_x formation from stationary sources (Brown et al. 1974; Crawford et at. 1976).

Overall control of excess air consistent with efficient burner operation may be the simplest method for NO_x reduction. This approach reduces the concentration of oxygen available for combination with atmospheric or coal-bound nitrogen, thus minimizing the formation of NO_x. In actual practice, however, a certain amount of excess air is always required to avoid the production of unburned fuel and smoke resulting from poor

combustion. A decrease in excess air also can lead to furnace slagging, with increased maintenance and possible operating problems (Brown et al. 1974).

Another possible approach to NO_x control that the applicant should consider is staged combustion. This operation consists of firing the operating burners in the lower burner rows or levels with substochiometric quantities of air and providing the additional air required for the burn-out of combustibles through the air registers of the uppermost row or level, keeping the quantity of overall excess air as low as possible. The effect is to create two combustion zones--a primary reducing zone and a lower-temperature post-flame oxidizing zone.

Control of excess air and staged combusiton appear to have similar results in the control of NO_x formation. Reported data on reductions on NO_x emission levels are in the range of 50 to 65 percent (Armento 1975).

The permit applicant should discuss and substantiate the use of all proposed air emission control equipment in the EIA. The above discussion of current and emerging air pollution control technologies is not intended to be all inclusive, but is meant to provide a preliminary framework for the assessment and selection of pollution control technologies.

III.D. STATE OF THE ART TECHNOLOGY: END OF PROCESS CONTROLS, SOLID WASTE DISPOSAL[13]

Emission abatement at coal-fired power stations consists of procedures to minimize release of particulate matter, sulfur oxide, and the pollutants into the atmosphere via the stacks. These procedures, which were described in Section III.C, also result in the accumulation of waste material; the applicant should discuss the magnitude and significance of such wastes and describe methods to treat and dispose of the wastes.

Fly ash collected from the electrostatic precipitators, wet scrubbers, or fabric filters can be conveyed to a mixing tank where it is mixed with the bottom ash slurry, or piped directly to ash ponds. Dewatered fly ash also may be disposed of in landfill sites or used in a number of ways. In 1972, about 16 percent of the coal ash (fly ash, bottom ash, slag) produced in the United States was used rather than discarded. Uses included application as fertilizer and filler in asphalt mixes, roads, cement products, etc. The use of coal ash is discussed in some detail in Hecht and Duvall (1975). It can be predicted that such use will increase, mainly for economic reasons, but also to conform to the Nation's trend toward recycling and conservation.

---

13 Any solid waste disposal operation not specifically regulated by the NPDES permit would be subject to the Resource Conservation and Recovery Act (PL 94-580)--either the sanitary landfill criteria of Section 4004 or the regulatory controls of the Subtitle C hazardous waste management program. Owing to the draft status of these current regulations, the applicant should consult with the appropriate EPA officials regarding the applicability of solid and hazardous waste regulations.

Methods for the removal of sulfur dioxide from the flue gas include at least two processes that result in a waste sludge byproduct. The amount of sludge produced by a given station will depend on the sulfur content of the coal. The sludge, composed mainly of calcium sulfite, calcium sulfate, and water, can be dewatered to about 50 percent solids (by weight) and transferred to settling ponds. Sludge-settling ponds usually are lined, and evaporation is allowed to reduce the volume of the suspension. The residue often is thixotropic[14] and can be very difficult to dispose of or use as landfill. One method that currently is in use to reduce the magnitude of this problem is to add fly ash to the limestone scrubber sludge before transfer to the evaporation ponds (Carlton and Hargrove 1976). The addition of fly ash (or bottom ash) to scrubber sludge or scrubber sludge dewatering effluent also serves to neutralize the acidity (pH 5 to 5.5) of the effluent (Cooper 1975). After evaporation, the material may be hauled off-site to a landfill area.

Slag and bottom ash, which in 1972 accounted for about 30 percent of the coal ash (Hecht and Duvall 1975), are recovered from the bottom of the boiler. Newer installations commonly have "dry-bottom" boilers, in which the ash falls through a grate into an ash hopper usually filled with water. Other facilities have "wet-bottom" or slag tap boilers, in which the residue is tapped in the molten state and drops into a water-filled ash hopper. The amounts of slag or bottom ash will depend on the ash content of the coal and the furnace type, among other factors. (It may amount to 500 tons per day for a 1,000 MW plant burning low sulfur coal.) The ash-and-water slurry from these wet- and dry-bottom boilers is sometimes mixed with fly ash and piped to settling ponds, which can occupy 20 to 30 acres of the site, or is dewatered and hauled by truck to an ash disposal area.

The applicant should consider lining the ash settling ponds with impervious material (e.g., clay). In cases where the ash ponds are not lined, leaching of water-soluble constituents of the ash into the underlying soil, and perhaps into the groundwater, can occur.

The chemical composition of coal ash will depend largely on the geology of the coal and the boiler operating conditions. In general, about 50-90 percent of the ash is in the glass state, with smaller quantities of quartz, mullite, magnetite, and hematite. A range of values for the major constituents of coal ash is given in Table 12. An analysis of the trace elements in the ash of a particular coal is given in Table 13. The high concentrations of the alkali and alkaline earth elements (Ca, Mg, K, Na) tend to give coal ash solutions alkaline reactions. Under these conditions trace elements form insoluble compounds, which, together with solids in the suspensions, will tend to fill and seal the pore spaces of the underlying soils. Therefore, the rate of movement of leachates from the pond should decrease over an extended period of time. This decrease should be more rapid in fine-textured soils.

---

14 Becoming fluid when disturbed and setting to a gel when allowed to stand.

Table 12. Major chemical constituents of coal ash

Constituents	Range, Percent
Silica (SiO_2)	20-60
Alumina (Al_2O_3)	10-35
Ferric Oxide (Fe_2O_3)	5-35
Calcium Oxide (CaO)	1-20
Magnesium Oxide (MgO)	0.25-4
Titanium Dioxide (TiO_2)	0.5-2.5
Potassium Oxide (K_2O)	1.0-4.0
Sodium Oxide (Na_2O)	0.4-1.5
Sulfur Trioxide (SO_3)	0.1-12
Carbon (C)	0.1-20

Source: N. L. Hecht and D. S. Duvall. 1975. Characterization and utilization of municpal and utility sludges and ashes. Vol. II, Coal Ash, EPA-670/2-75-033C NERC-EPA, Cincinnati, OH. May.

Table 13. Trace element constituents of coal ash*

Element	Coal (ppm)	Bottom Ash (ppm)	Precipitator Ash (ppm)
Sb	.08	< 1.0	4.4
As	.87	4.4	61.
Ba	440.	5,600.	15,000.
Be	.29	.40	5.2
B	37.7	83.2	1,040.
Cd	.11	1.1	4.2
Cr	1.8	15.6	8.9
F	78.5	44.6	2,880.
Ge	.48	< .1	9.2
Hg	.131	.010	< .010
Pb	.15	1.0	4.0
Mn	26.2	56.7	374.
Mo	.87	3.2	12.
Ni	3.67	14.5	92.9
Se	.98	.14	16.4
V	< 13.	< 100.	< 100.
Zn	16.2	< 8.0	386.
Cu	5.2	68.	238.

Source: Holland et al. 1975. The environmental effects or trace elements in the pond disposal of ash and flue gas desulfurization sludge. Electric Power Research Institute, Palo Alto CA.

* Data are for a particular batch of coal and are not necessarily representative of all coal.

The data in Table 13 indicate that partitioning and concentration of the trace elements occur during combustion. In a study of the pathways of thirty-seven trace elements through a coal-fired power plant it was indicated that these elements could be roughly classified as follows (Klein et al. 1975):

- Class I--Elements that are not volatilized in the combustion zone, but instead form a rather uniform melt that becomes both fly ash and slag. These elements include Al, Ba, Ca, Ce, Co, Eu, Fe, Hf, K, La, Mg, Mn, Rb, Sc, Si, Sm, Sr, Ta, Th, and Ti.

- Class II--Elements that are volatilized on combustion, and condense or adsorb on the fly ash as the flue gas cools, leading to depletion from the slag and concentration in the fly ash. These elements include As, Cd, Cu, Ga, Pb, Sb, Se, and Zn.

- Class III--Elements that remain almost completely in the gas phase. These elements include Hg, Cl, and Br.

Intermediate between Classes I and II are the elements in coal that could not definitely be assigned to either class on the basis of the data obtained in the study (Klein et al. 1975).

IV. OTHER CONTROLLABLE IMPACTS

IV.A. AESTHETICS

New source steam electric generating stations, may be large and complex facilities occupying an area of up to several hundred acres. Cooling towers, air emission stacks, raw material storage and handling area, and other plant components may detract considerably from the surrounding landscape. Particularly in rural and suburban areas, this configuration may represent a significant intrusion on the landscape; existing industrial areas would be less affected. Measures to minimize the impact on the environment should be developed primarily during site selection and design. The applicant should consider, as applicable, the following factors to reduce potential aesthetic impacts:

- Existing Nature of the Area--The topography and major land uses in the area of the candidate sites can be important aesthetic considerations. Natural topographic conditions perhaps could serve to screen the plant from public view. A lack of topographic relief will require other means of minimizing impact, such as regrading or vegetation buffers. Analysis of major land uses may be useful to assist in the design and appearance of the facility. The design of the facility should reflect the nature of the area in which it is to be placed (i.e., the stuctures should blend into the existing environment as much as possible). The use of artists' conceptions, preferably in color, will be most useful in determining the visual impact and appropriate mitigation measures and should be included in the EIA.

- Proximity of Sites to Parks and Other Areas Where People Congregate for Recreation and Other Activities--The location of these areas should be mapped and presented in the EIA. Representative views of the plant (site) from observation points should be described. The visual effects on these recreational areas should be described in the EIA in order to develop the appropriate mitigation measures.

- Transmission Lines and Transportation System--The visual impact of new transmission lines, access roads, railroad lines, pipelines, etc., on the landscape should be considered. Specific locations, construction methods and materials, maintenance activities and mitigation plans should be specified. (The US Department of Agriculture, Forest Service, Handbook 478, National Forest Landscape Management, Volume 2, Chapter 2, Utilities, details methods of minimizing aesthetic impacts of transmission lines.)

- Creation of Aesthetically Pleasing Areas--In some cases, the development of a power plant will create aesthetically pleasing areas. Screening the facility by vegetation or using the natural topography may improve the appearance of

an area. Construction of a cooling lake and development of recreational facilities also may be an improvement to the area. Such positive impacts should be described in the EIA.

IV.B. NOISE

To evaluate noise generated from a proposed power plant site, the applicant is required to:

- Identify all noise-sensitive land uses and activities adjoining the proposed site (include habitats of various species of wildlife)
- Measure the existing ambient noise levels of the areas adjoining the site
- Identify existing noise sources, such as traffic, aircraft flyover, and other industry, in the study area as defined
- Identify all applicable State and/or local noise regulations
- Estimate the noise level of the power plant during operation and compare with the existing community noise levels and the applicable noise regulations
- Calculate the change in community noise levels resulting from construction of the power plant
- Assess the noise impact (on man and wildlife) of the power plant operational noise and construction noise, and, if required, determine noise abatement measures to minimize the impact.

A brief description of noise measurement techniques is presented below.

IV.B.1. Existing Noise Levels

The applicant should conduct a noise measurement survey of the proposed power plant site to determine the existing noise levels of the adjoining areas. The survey should consist of at least one stationary measurement location where a continuous 24-hour measurement is obtained and several additional locations where random sample measurement are made. The number of sample measurements should be based on the size of the proposed site. These measurements can be made for a period of one-half hour, four times during the day: 7 a.m. to 11 a.m., 1 p.m. to 5 p.m., 7 p.m. to 11 p.m., and 1 a.m. to 5 a.m. All noise-sensitive land uses and activities adjoining the site should be identified. All sources of existing noise, such as traffic, aircraft, and other industry, also should be identified. The measurement of the existing noise levels will provide a comparison with the predicted power plant noise to assess the noise impact. The applicant should review State and local noise regulations to determine their applicability to the proposed power plant. Other criteria, such as the EPA Levels Document, also should be used to identify noise impacts of the project.

IV.B.2. Construction Noise Impacts

To assess construction-related noise impacts, the applicant should calculate noise levels at the property line for each major phase of construction. For this calculation, the total construction of the plant should be divided into different phases of activity, such as site preparation (excavation) and construction (steel erection). An inventory of equipment should be made for each of the construction phases and should include the anticipated duration of equipment operation. The noise level of the individual construction equipment can be determined from the available literature. With this information, the cumulative noise level of the construction equipment being used can be calculated. The resulting construction noise then can be compared with the measured existing noise levels to determine the extent of impact. The effect of the impact should be discussed and noise abatement measures should be presented in the EIA.

IV.B.3. Operation Noise Impacts

The major sources of noise associated with the operation of a fossil-fuel power plant that contribute to property line noise are:

- Fans, which include induced draft, forced draft, and ventilation fans
- Cooling towers, natural draft or mechanical draft, which may be required for power plants that are restricted by thermal effluent discharge regulations or lack of cooling water
- Substation, i.e., transformers and air blast circuit breakers.

To determine the resultant operational noise of the plant, the applicant should gather data on all major noise sources. The data can be collected either from literature sources or from actual measurements of a similarly sized plant. The equipment noise should be used in a calculation model that will determine the noise at the property line of the site based on distance, terrain, and capacity of equipment operation. The plant noise at the property line should then be compared with the measured existing noise levels and the applicable noise regulations or criteria to assess any noise impact. If an impact is identified, it should be discussed in terms of its magnitude and effects and methods of noise abatement should be developed. The applicant should consider the following noise control treatment, where applicable:

- Forced Draft Fan--Install fan in acoustically lined plenum or use a silencer on the fan inlet
- Induced Draft Fan--Insulate fan case or use a discharge silencer
- Natural Draft Cooling Tower--Provide sufficient setback from property line

- Mechanical Draft Cooling Tower--Provide inlet silencers, orient inlet toward nonsensitive land uses

- Power Transformers--Provide a sound barrier between transformer and closest noise-sensitive land use.

IV.C. SOCIOECONOMIC

Introduction of a large new power generating facility into a community may cause economic and social changes. Therefore, it is necessary for an applicant to understand the types of impacts or changes that may occur so that they can be evaluated adequately in the EIA. The importance of these changes usually depends on the nature of the area where the plant is located (e.g., size of existing community, existing infrastructure). Normally, however, the significance of the changes caused by a plant of a given size will be greater in a small, rural community than in a large, urban area. This is primarily because a small, rural community is likely to have a nonmanufacturing economic base and a lower per capita income, fewer social groups, a more limited socioeconomic infrastructure, and fewer leisure pursuits than a large, urban area. There are situations, however, in which the changes may not be significant in a small community and, conversely, in which they may be considerable in an urban area. For example, a small community may have had a manufacturing (or natural resource) economic base that has declined. As a result, such a community may have a high incidence of unemployment in a skilled labor force and a surplus of housing. Conversely, a rapidly growing urban area may be severely strained if a new power plant is located there.

The rate at which the changes occur (regardless of the circumstances) also is an important determinant of the significance of the changes. The applicant should distinguish clearly between those changes occasioned by the construction of the plant and those resulting from its operation. The former changes could be substantial but usually are temporary; the latter may or may not be substantial but normally are more permanent in nature.

During the construction phase, the impact usually will be greater if the project requires large numbers of construction workers to be brought in from outside the community than if local, unemployed workers are available. The impacts are well known and include:

- Creation of social tension

- Demand for increased housing, police and fire protection, public utilities, medical facilities, recreational facilities, and other public services

- Strained economic budget in the community where existing infrastructure becomes inadequate.

Various methods of reducing the strain on the budget of the local community during the construction phase should be explored. For example, the company itself may build the housing and recreation facilities and provide the

utility services and medical facilities for its imported construction force. Or the company may prepay taxes and the community may agree to a corresponding reduction in the property taxes paid later. Alternatively, the community may float a bond issue, taking advantage of its tax-exempt status, and the company may agree to reimburse the community as payments of principal and interest become due.

During plant operation, the more extreme adverse changes of the construction phase are likely to disappear. Longer run changes may be profound, but less extreme, because they evolve over a longer period of time and may be both beneficial and harmful.

The permit applicant should document fully in the EIA, the range of potential impacts that are expected and demonstrate how possible harmful changes will be handled. For example, an increased tax base generally is regarded as a positive impact. The revenue from it usually is adequate to support the additional infrastructure required as the operating employees and their families move into the community. The spending and respending of the earnings of these employees has a multiplier effect on the local economy, as do the interindustry links created by the new plant. Socially, the community may benefit as the increased tax base permits the provision of more diverse and higher quality services and the variety of its interests increases with growth in population. Contrastingly, the transformation of a small, quiet community into a larger, busier community may be regarded as an adverse change by some of the residents, who chose to live in the community, as well as by those who grew up there and stayed, because of its amenities. The applicant also should consider the economic repercussions if, for example, the quality of the air and water declines as a result of various waste streams from the new source power plant and its ancillary facilities.

In brief, the applicant's framework for analyzing the primary and secondary socioeconomic impacts of constructing and operating a power plant must be comprehensive. Most of the changes described should be measured to assess fully the potential costs and benefits. The applicant should distinguish clearly between the short term (construction) and long term (operation) changes, although some changes may be common to both (e.g., the provision of infrastructure) because the significance of the changes depends not only on their absolute magnitude but on the rate at which they occur.

The applicant should develop and maintain close coordination with State, regional, and local planning and zoning authorities to ensure full understanding of all existing and/or proposed land use plans and other related regulations.

IV.D. ENERGY SUPPLY

The impact of a fossil-fueled power plant on local energy supplies will depend largely on the type of processes proposed and the ancillary facilities. The applicant should evaluate the energy efficiencies of all processes considered during project planning and then consider the alternative analysis. Also feasible design modifications should be considered in order to reduce energy needs.

At a minimum, the applicant should provide the following information:

- Total external energy demand for operation of the plant
- Total energy generated on site
- Energy demands by type
- Proposed measures to reduce energy demand and increase plant efficiency.

For a detailed discussion of energy demands in the fossil-fueled steam electric generating industry see US Department of Commerce (1977).

IV.E. IMPACT AREAS NOT SPECIFIC TO FOSSIL-FUELED STEAM ELECTRIC GENERATING STATIONS

The intent of the preceding sections was to provide guidance to new source NPDES permit applicants on those impact areas that are specific to or representative of fossil-fueled steam electric generating facilities. It is recognized that many impacts resulting from the construction and operation of a fossil-fueled power plant are similar to impacts associated with many other new source facilities; therefore, no effort has been made to discuss these types of impacts, but, instead, reference is made to more general guideline documents. For example, general guidelines for developing a comprehensive inventory of baseline data (preproject conditions) and a general methodology for impact evaluation are contained in Chapters 1 and 2 of the EPA document, Environmental Impact Assessment Guidelines for Selected New Source Industries. Although broad in scope, this document and other appropriate guidance materials should be used by the applicant for assistance in evaluating non-industry-specific impacts.

V. EVALUATION OF AVAILABLE ALTERNATIVES

V.A. NO-BUILD ALTERNATIVE

Inherent in the environmental assessment process is the need to determine the impact of not constructing the proposed facility, usually referred to as the "no-build alternative." To assess this alternative:

- First, the demand for power during the life of the proposed facility must be estimated.
- Second, the amount of power that will be available without the facility must be determined.
- Third, the impacts of the estimated short-fall must be considered.

These steps are considered in this section.

Figure 5 presents a framework for evaluating the no-build alternative. Given present generating capability (1), the projected demand for electricity (22) is the basis for the additional unit proposed (2). Therefore, an analysis and justification of the projected demand fo power is of prime importance. Not providing the power (3) has consequences (5), the most important of which are loss of load (6) and effect on the regional economy (7).

Given the projected demand, and that additional electricity is to be provided (4), various alternative choices can be explored (see items 8 through 21). The analysis of these choices belongs in the alternatives evaluation. Three of the options, however, are directly relevant to the need for power: installation of solar units (10), load switching (20), increase in generating efficiencies (21). To the extent that these are achieved, the need for the new fossil fuel-fired unit is reduced:

- Installation of solar units reduces the demand for electricity generated by a power plant.
- Load switching and an increase in generating efficiencies increase the supply of electricity from existing power plants.

V.A.1. Projecting the Demand for Power

A number of variables underlie a projection of power demand (Figure 5, 20-35), which raises the issue of the extent to which they must be explicitly included in this section. Early environmental impact analyses often were limited to projecting the demand for electricity by extrapolation from past trends. Given the dramatic drop in electrical consumption in the United States in the early 1970's described in Section I.B.1, this approach is inadequate. Some projections have taken account of recent factors by extrapolating the historical trend from a lower base, or by assuming a growth trend somewhat lower than historical, or both. The assumptions underlying these shifts usually are not made explicit. This approach, too, is inadequate.

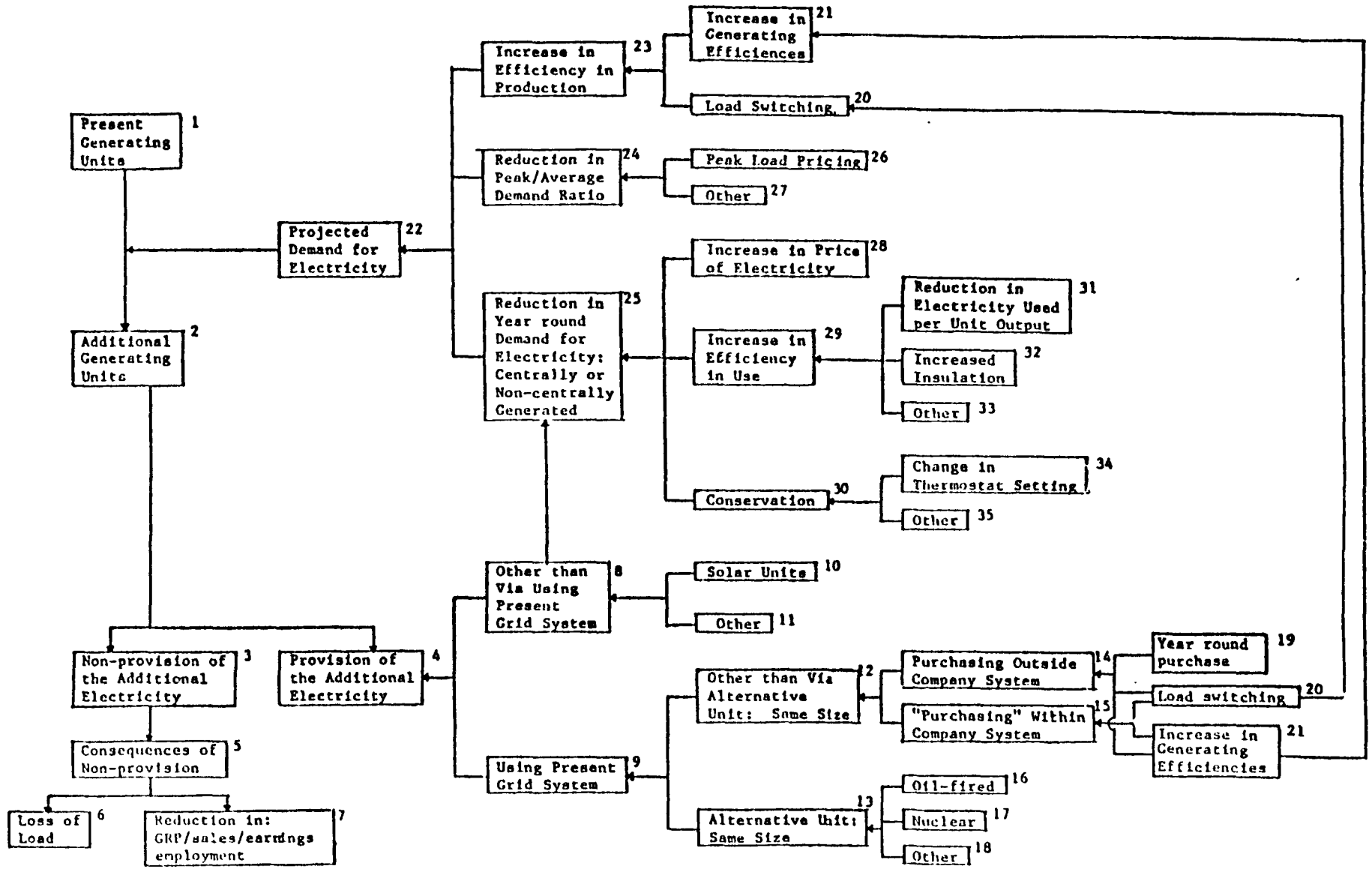

Figure 5. Need for power: Analytical framework

A more thorough approach is possible, and is recommended, involving the use of econometric models. These may include any or all of the variables 23-24. Table 14 is a list of the variables used in one econometric model. Studies using this approach have been commissioned by individual utilities, by public utility commissions, by other State and Federal agencies, and by foundations. There also is a growing volume of literature in professional journals and private groups or individuals have testified at hearings relative to this topic. These studies have examined:

- Increased efficiency in the production of electricity (23) especially by load switching (20)
- Reduction in the ratio of peak to average demand (24), especially by peak load pricing (26)
- Various methods (28-34) of reducing the year-round demand for electricity (25)

The merits of an econometric model are that the assumptions underlying the projected demand are elucidated. This factor is critically important and the applicant should discuss it thoroughly in this section. Whether this discussion should be based on an econometric model individually tailored to each and every utility's circumstances, or (for each utility) developed ad hoc each time a utility proposes a new plant, is optional. Another option is to build on the results of other studies, using a step-down procedure if the model is designed for the region (or pool) of which the utility forms a part, or adjusting the model if it was designed for another utility, to take account of differences in the characteristics of electricity users. In this case, the step-down or other adjustment procedures must be defined as clearly as the assumptions, relations, and calculations of the underlying model.

Once a model has been chosen, the future power demand can be calculated and the assumptions that went into the determination can be identified clearly.

V.A.2. The Relationship of Demand for Power to Present and Planned Generating Capacity

Table 15 is an example of a utility's load and capability forecast. Given the projected demand, the need for additional generating capacity must be shown within that forecasting framework.

An electrical utility is obliged legally to provide service to its customers. To meet this obligation, its generating capability must be adequate to meet peak load demand. In addition, and to allow for unforeseen contingencies, a desired minimum reserve (i.e., generating capability in excess of peak load demand) is required. The reserve margin is expressed as the percent of excess capability over peak load. A 15 percent margin commonly is used. Thus, if the peak load is 5,000 MW, a generating capability of 5,750 MW is desirable.

Generating capability is a current given. The reserve margin sought is both a current and a future given. Therefore, the future level of generating capability required varies solely with the peak load demand expected in the future, as calculated by the model. The difference between the future level

Table 14. Factors affecting the demand for electricty

Growth rate of real per capita income
Growth rate of real electricity cost per unit
Growth rate of real price of alternative energy sources
Growth rate of service area population
Growth rate of service area nonmanufacturing employment
Growth rate of service area manufacturing employment
Growth rate of service area peak air conditioning demand
Elasticity of residential demand with respect to electricity price
Elasticity of commercial demand with respect to electricity price
Elasticity of industrial demand with respect to electricity price
Elasticity of residential demand with respect to income
Elasticity of commercial demand with respect to income
Elasticity of industrial demand with respect to wage rate
Elasticity of residential demand with respect to alternative energy prices
Elasticity of commercial demand with respect to alternative energy prices
Elasticity of industrial demand with respect to alternative energy prices

Source: Tolley, George S., Charles W. Upton, and V. Stevens Hastings. 1977. Electric energy availability and regional growth. Ballinger. Cambridge MA.

Table 15. Load and capability forecast

	Item	1974		1976		1978		1980		1982		1984	
		Sumr	Wint	Sumr	Wint	Sumr	Wint	Sumr	Wint	Sumr	Wint	Sumr	Wint
	Generator additions (MW)					515		515		700		700	
1.	Generating capability (MW)	3,127	3,127	3,677	3,677	4,707	4,707	5,737	5,737	7,137	7,137	8,537	8,537
2.	Nonfirm power purchase (MW)	150		100	100								
3.	Nonfirm power sale (MW)	150											
4.	Net system capability (1 + 2 - 3) (MW)	3,127	3,127	3,777	3,777	4,707	4,707	5,737	5,737	7,137	7,137	8,537	8,537
5.	Firm power purchased (MW)	610	265	663	318	583	235	625	276	677	328	743	393
6.	Firm power sale (MW)		345		345		345		345		345		345
7.	Highest system load (MW)	3,140	2,025	3,895	2,605	4,710	3,195	5,660	3,915	6,685	4,800	7,895	5,885
8.	Load responsibility (-5 + 6 + 7) (MW)	2,530	2,105	3,232	2,632	4,127	3,305	5,035	3,984	6,008	4,817	7,153	5,837
9.	MW margin (4 - 8) (MW)	597	1,022	545	1,145	580	1,402	702	1,753	1,129	2,320	1,384	2,700
10.	Desired minimum reserve (MW)	380	380	485	485	619	619	755	755	901	901	1,073	1,073
11.	Percent reserve on responsibility (1/8) X 100 (MW)	24	49	17	44	14	42	14	44	19	48	19	46

Note.--Desired minimum reserve is 15% of summer load responsibility.
Issued March 20, 1975.

of generating capability required and current generating capability measures the need for new capacity. In practice, firm and nonfirm power sales are netted out: netting out the former from peak demand yields load responsibility; netting out the latter from generating capability yields net system capability. Load responsibility and net capability--rather than peak load and gross capability--are the basis for establishing the need for additional capability.

In Table 15, this particular utility planned additional generating capability that would have given it summer reserve margins ranging from 14 to 24 percent over the forecast period 1974-1984. The mean is 17.8 percent, compared to a desired summer reserve margin of 15 percent. (The summer peak load is about 50 percent higher than the winter peak load; hence the winter reserve margin is much higher than the summer reserve margin. This major difference indicates the use of air-conditioning equipment during summer months.)

Data at this level of detail are necessary to verify the need for the proposed capacity, given that the projected demand for power has been justified

V.A.3. Impacts of Not Constructing Facilities

The consequences of not providing power are legitimately regarded as a measure of the need for power. A detailed analysis of the consequences of the no-build alternative should be undertaken by the applicant and presented here. A recommended framework for the analysis is described below.

The most direct consequence of the no-build alternative is the loss of load, which may be measured as the quantity of electricity that would have been provided to the utility's customers with the proposed generating unit minus the quantity of electricity that the utility can provide without the unit, multiplied by the price of the electricity not provided.

A number of assumptions may be used and may include, but should not be limited to, the following assumptions:

- The difference in quantities of electricity provided with and without the unit will never be made up.
- The difference will be made up at a later date.
- Existing units will run longer and be retired later.
- Purchasable power is available.
- The cutback in planned system capacity is allocated across customer classes in such a way as to reduce the costs incurred.
- The utility has the choice of the appropriate adjustment period.

Under all these assumptions the relevant measure of the different quantities of electricity with and without the planned unit is peak demand projected with the new capacity minus peak demand available without it, when the same reserve margin is used.

This direct measure of the value of the electricity forgone is likely to underestimate the total value because of indirect consequences. For example, the lack of the additional electricity affecting customer classes may lead to reduced output by industries, which in turn may both reduce their purchases from other industries and lay off workers. The supplying industries, whose sales now are reduced, may reduce their consumption of electricity. Unemployed workers may spend less on goods and services, further reducing the consumption of electricity by the suppliers of goods and services. In short, the initial short-fall in electrical output may have a multiplier effect throughout the economy. This indirect, or multiplier effect must be added to the direct short-fall to measure the total effect. It is measured in the same way, that is: quantities of electricity with and without the unit, multiplied by price.

Additional measures of impact may be necessary. For example, a utility may retain its reserve margin by increasing rates to reduce peak load to what it can provide. The result of this action is a burden to the consumer and is measured by the rate differential multiplied by the quantity of electricity purchased. From the standpoint of the efficient allocation of the resource, this is not a cost to society as a whole. In terms of equity, mechanisms are available to society for redress, such as the reduction of taxes, or rebates.

Employment, or the loss of jobs, may be measured as a consequence of not providing the power needed. In turn, this employment loss may lead to losses in earnings and population. These effects tend to be regional rather than national, but must be explored thoroughly to explain the need for power. Thus, the applicant should analyze the sensitivity of industrial sectors to electricity, and should supplement the analysis by input-output and/or economic base analyses in measured earnings, gross regional product sales, employment, and population consequences for the regional economy.

V.B. SITE ALTERNATIVES

Preliminary site selection activities should take place before the EIA document is prepared. These activities should include a thorough analysis of the potential site areas within or outside the utility's franchise service area. This identification and analysis should be described in the EIA and the reasons for eliminating a site(s) should be specified.

The permit applicant is encouraged to consult with the appropriate resource agencies during the early stages of site selection. Key agencies that can provide valuable technical assistance include:

- State, regional, county, or local zoning or planning commissions can describe their land use programs and where variances would be required. Federal lands are under the authority of the appropriate Federal land management agency (Bureau of Reclamation, U.S. Forest Service, National Park Service, etc.).

- State or regional water resource agencies can provide information relative to water appropriations and water rights.

- Air pollution control agencies can provide assistance relative

to air quality allotments and other air-related standards and regulations.

- The Soil Conservation Service and State Geological Surveys can provide data and consultation on soil conditions and geologic characteristics.

If the State has a power plant siting law, the law should be cited and any applicable constraints described. An initial survey of site availability and suitability should be presented, using a screening process that, after identifying areas containing possible sites, eliminates those sites with less desirable characteristics.

In the EIA the applicant should display the potential site locations on maps, charts, etc., that show the power network, environmental conditions, and other relevant site information. (A consistent identification system for the alternative sites should be established and retained on all graphic and text material.) The maps should be related to the applicant's service area (and adjacent areas if relevant). They should display pertinent information that includes, but is not limited to:

- Areas and sites considered by the applicant
- Major centers of population density (urban, high, medium, low density, or similar scale).
- Water bodies suitable for use in cooling systems
- Railways, highways (existing and planned), and waterways suitable for the transportation of fuels, wastes, and raw materials
- Important topographic features (such as mountains and marshes)
- Dedicated land use areas (parks, historic sites, wilderness areas, testing grounds, airports, etc.)
- Other sensitive environmental areas
- Existing generating stations, if any, with total capacities of all units in megawatts and types of fuel used
- Other planned generating additions to the network to be installed before the proposed facility goes on line
- Transmission lines (as distinguished from distribution lines) and termination points on the system for proposed and potential lines from the applicant's proposed facility
- Major interconnections with other power suppliers
- Industrial complexes, significant mineral deposits, and mineral industries.

Maps of areas outside the applicant's service area should include the preferred transmission line corridor for the applicant's power generating system. Suitable correlations should be made among the maps. For example, one or more of the maps showing environmental features may be to the same scale as a map showing power network configurations or present generating sites. Major transmission lines may be overlaid on the environmental maps where this treatment is helpful to the discussion. Power networks for the various candidate areas (for 115-kV lines and above) should be presented when different from the power network for the prime site.

Using the foregoing graphic materials, the applicant should provide a condensed description of the major considerations that led to the selection of the final candidate areas, including proximity to load centers and raw materials, economic analyses with tradeoffs, adequacy of transportation systems, environmental aspects including likelihood of floods, license or permit problems, and compatibility with any existing land use planning programs, and current attitudes of interested citizens.

Having discussed candidate areas and appropriate power sources, the applicant also should indicate the steps, factors, and criteria used to select the candidate site. The applicant should present a cost-effectiveness analysis of the candidate sites including pertinent environmental, social, and economic considerations to show why the proposed site-plant combination is preferred over all other candidate site alternatives for the facility.

Quantification, although desirable, may not be possible for all factors because of lack of adequate data. Under such circumstances, qualitative and general comparative statements, supported by documentation, may be used. Where possible, experience derived from operation of other plants at the same site, or at an environmentally similar site, may be helpful in appraising the nature of expected environmental impacts.

Economic estimates should be based at least on a preliminary conceptual design that considers how construction costs are affected by such site-related factors as topography, geology, and tectonics; length of cooling water conduit; and cooling tower configuration as determined by meteorological factors.

Once a specific site for location of the plant is proposed it may receive considerable opposition locally, statewide or even nationally. Such opposition may derive from the fact that the proposed plant would significantly impact a unique recreational, archaeological, or other important natural or manmade resource area. It may destroy the rural or pristine character of an area. It may conflict with planned development for the area. The site may be opposed by citizen groups. It may have significant geological and hydrological constraints. It may be subject to periodic flooding, hurricanes, earthquakes, or other natural disasters.

Therefore, if the proposed site location proves undesirable, then alternative sites from among those originally considered should be reevaluated or new sites should be identified and evaluated. Expansion or technological changes at an existing plant site may be a possible alternative. Therefore, it is critical that a permit applicant systematically identify and assess all

feasible alternative site locations as early in the planning process as possible.

V.C. PROCESS ALTERNATIVES

V.C.1. Alternative Generating Methods

Several alternative methods of electrical generation should be considered for the principal alternative sites. Those alternatives that appear practical should be considered on the basis of criteria such as:

- Land requirements of the station, fuel storage facilities, waste storage facilities, and exclusion areas
- Release to air of dust, sulfur dioxide, nitrogen oxides, and other potential pollutants, subject to Federal, State, or local limitations
- Releases to water of heat, chemicals, and trace metals in blowdown, subject to Federal, State, and local regulations
- Water consumption rate
- Fuel consumption and the generation of ash with associated waste treatment disposal problems
- Social impacts of increased traffic as the fuel is transported to the site and wastes are transported from the site
- Social effects resulting from the influx of construction, operation, and maintenance crews
- Economics
- Aesthetic considerations for each alternative process
- Reliability and energy efficiency

A tabular or matrix form of display often is helpful in comparing the feasible alternatives. Alternative processes which are not feasible should be dismissed with an objective explanation of the reasons for rejection.

The following are the major alternative methods of power generation. They are discussed further in the Development Document for Effluent Limitation Guidelines and New Source Performance Standards for the Steam Electric Power Generating Point Source Category (EPA 1974):

- Coal-Fired Units: Major considerations are the impact of transport and storage of fuel and wastes, gaseous emissions, aqueous effluents, and coal pile runoff.
- Oil-Fired Units: Major considerations are effluent discharges, transportation and storage of fuel, and potential impacts from spills.

- Gas-Fired Units: Major considerations are high accident potential resulting from the nature of the gas and transportation of fuel. Competitive uses of natural gas should be considered before selecting it as a fuel for an electric power generating facility.

- Nuclear-Powered Units: Major considerations are releases, transport, and disposal of wastes, water consumption, and thermal effluent disposal.

- Synthetic and Natural Gas Turbine Units: Gas turbine units often are used for peaking facilities because of their quick start-up characteristics. This type of unit has been installed for emergency capacity additions because of the extremely short lead time required for their construction and installation. Their small size makes them easy to locate. These units, however, are highly inefficient, experience long down times, require extensive maintenance and generate a significant amount of noise. Major considerations for their choice are small capacity additions required, and little or no significant environmental impacts from effluents.

- Combined Cycle Units: To circumvent the low efficiency of operation of gas turbines, a boiler may be added that uses the gases from combustion in the turbines, and in some cases minor supplemental burning, to generate electricity in a steam cycle. Low reliability factors and high maintenance rates present problems. Major positive considerations are the need for medium sized, intermediate load capacity requirements, and relatively moderate environmental impacts.

- Hydroelectric Facility: Major considerations are influences on terrestrial and aquatic ecology, interference with fish migration and spawning patterns, and exclusion of competitive uses of occupied lands.

- Pumped Storage Facility: Major considerations are similar to those presented for the hydroelectric facility.

- Geothermal: Major considerations are disposal of wastewater (brine), air pollution (H_2S), and the possible inducement of tectonic activity in some areas.

- Other Techniques: If applicable, identification and general description should be made of other techniques available for the generation of electrical energy during the lifetime proposed for the facility, such as the magnetohydrodynamic generator (MHD), fuel cells, solar cells, wind power devices, fusion reactors, breeder reactors, and coal gasification.

V.C.2. Alternative Facility Designs

The proposed plant should incorporate a combination of component systems that

have been selected through an analysis of economic, environmental, and engineering factors.

Economic comparisons should include initial capital costs and operating costs of the individual systems and should be expressed in terms of cost of power generation.

Environmental effects should be documented and the magnitude of the effects should be quantified wherever possible. The extent of the population or resources affected by the various alternative systems should be presented in the comparison.

Engineering comparisons must include the projected length of time the alternative systems would be operable. Estimated maintenance costs over the useful life of each system should be included, as should an analysis of the effect of maintenance on the overall utility's generating reliability.

Throughout the sections that follow, the applicant should discuss the design alternatives for relevant plant systems. A description of each alternative, composed of economic, environmental, and engineering features, should be presented to permit comparisons.

V.C.2.a Fuel Type. Major factors include availability, costs, quality, and compatibility with national energy policies and objectives.

V.C.2.b. Thermodynamic Cycle. The applicant should provide sufficient information to support the evaluation that has been conducted to determine the characteristics selected for the turbine-generator units. Reasons such as efficiency, capability for water reuse, and flexibility of operating conditions, used in the selection of the proposed cycle, should be presented.

V.C.2.c. Cooling Systems.[15] The applicant should identify and describe those heat dissipation systems that were evaluated for use in the proposed plant (exclusive of intake and discharge) and the reasons for selection of the proposed system. The discussion should consider at a minimum once-through cooling, cooling towers, cooling lakes, cooling ponds and their respective variations in evaporation rates, drift, blowdown, potential environmental impacts, and relative costs.

For once-through cooling systems or cooling lakes, the following factors should be addressed:

- Adequacy of water supply
- Modeling predictions of extent of thermal plume
- Predictions of compliance or noncompliance with water quality and effluent standards

---

15 See footnotes 1 and 7.

- Absolute temperatures expected in the mixing zone and downstream
- Expected effects on phytoplankton, periphyton, aquatic macrophytes, zooplankton, macroinvertebrates, shellfish beds, larval fish, and adult fish
- Effects of the thermal effluent on dissolved oxygen levels
- Effects on recreation
- Effects on spawning areas and commercial fishing
- Synergistic effects.

If a cooling lake(s) system is considered then a checklist of important ecological parameters should be developed to ensure a thorough evaluation of the expected impacts from such a cooling system.

The creation of a cooling lake may result in multiple environmental benefits if the project is planned carefully. The primary impact is the conversion of large areas of terrestrial habitat into aquatic habitat. The character of existing water courses on the site also may be altered and much of the biota inhabiting both land and water areas potentially could be destroyed or certainly displaced. The applicant, therefore, should evaluate land use tradeoffs and should justify the conversion of existing terrestrial and aquatic habitats to a new lake ecosystem. The applicant should consider the ecological and social values of the land to be inundated and compare them with values to be derived from a cooling lake. Examples of questions that should be addressed are:

- Are the terrestrial or aquatic habitats which are proposed for inundation unique, ecologically or otherwise?
- Are these habitats part of isolated and limited types of environments?
- Does the land or water support ecologically unique, important, endangered, or threatened flora and fauna?
- Will inundation mean the loss of prime agricultural land or the loss of a valuable recreational resource?
- Is the land historically or archaeologically important?
- How will the proposed lake change the local hydrological characteristics?
- What is the expected lifespan of the proposed cooling lake? What is the depth configuration? What is the expected siltation rate?
- What is the anticipated thermal regime of the lake? Will the thermal regime allow for the development of a usable recreation source?

- Will the lake be open to the public? Will public boat access areas or recreation areas be provided and maintained by the applicant? by the State?

- Can the lake be used to produce a marketable commercial fish, shellfish, or sport fishery?

The creation of a large cooling lake may commit thousands of acres of land and represents a major impact. Therefore, early in the planning process, land use tradeoffs associated with this major construction activity and site components should be carefully considered. The design of the lake (depths, temperatures, volume, etc.) should reflect a maximized development of usable aquatic resources. The applicant should then compare and contrast the impacts associated with the proposed use of a cooling lake with those of other cooling systems (once-through cooling, cooling towers, etc.). Because the creation of a cooling lake represents a large-scale change in land use, the applicant should demonstrate thoroughly that the net changes are clearly favorable.

Cooling ponds by legal definition differ somewhat from cooling lakes, but must be evaluated in the same manner as other cooling system alternatives. The extent of the consideration is not so broad as with cooling lakes. At a minimum, the applicant should address:

- Impacts associated with usurpation of existing terrestrial habitats

- Evaporative losses

- Projected blowdown characteristics and resultant effects

- Potential leachate and subsequent groundwater contamination problems

- Precautionary measures for public safety

- Possible accumulation of potentially toxic wastes.

If cooling towers are selected as a viable cooling alternative, their potential for impact should be outlined. Evaluation factors should include at a minimum:

- Volume and type of construction materials (concrete, sand and gravel, etc.)

- Impact of construction material acquisition (strip mines, gravel dredging, truck transport)

- Energy requirements for material synthesis

- Projected blowdown characteristics

- Projected terrestrial deposition effects

- Evaporative losses
- Consumptive losses of entrained aquatic organisms
- Visual and aesthetic impacts (fogging and icing).

The expected areal coverage of cooling tower drift and the expected chemical composition of the resultant deposits must be evaluated in terms of its potential effects on natural plant and animal communities and agricultural production. The potential for interaction of atmospheric components with stack emissions and the formation of "acid rain" also should be discussed.

V.C.2.d. Cooling Water Intake Structure.[16] The applicant should identify and describe those alternative concepts that were evaluated for the design and location of the water intake structure, and compare them to the design and location of the proposed intake. The applicant should consider environmental, engineering, and cost factors in the selection of the proposed intake structure. A comparison of these factors for each alternative intake design and location should be presented in the EIA.

V.C.2.e. Cooling Water Discharge Structure. The applicant should identify and describe alternatives that were evaluated for the conceptual design of the water discharge structure and compare them to the design and location of the proposed discharge. Environmental, engineering, and cost considerations for all alternatives considered should be compared and evaluated in the EIA.

V.C.2.f. Chemical Waste Systems. The applicant should identify and describe alternative chemical waste systems. Reductions in maximum and average chemical concentrations in the discharge stream, discharge flows, or other aspects of each system that would result in reducing environmental effects should be discussed and compared. The ability of the systems to meet EPA effluent guidelines should be noted.

V.C.2.g. Fouling Control System. The applicant should identify both mechanical and chemical methods of fouling control and should describe them in a manner similar to alternative chemical waste systems (see V.C.2.f.). The initial choice of physical or chemical cooling water treatment systems is critical in order to reduce potential impacts. A mechanical cleaning system would normally be the mechanism of least impact, but there may be locations and water quality situations where the use of chlorine or other biocides might be required to prevent condenser fouling. Where the use of biocides is proposed, it should be justified fully and the toxicity of the expected discharge concentrations must be compared with the tolerance levels of important biota present in the waterbody. The type of chlorine compounds expected primarily depends upon the constituents of the cooling water, water temperature, and pH.

V.C.2.h. Sanitary Waste System. This source of pollution is not unique to the power generating industry and many adequate treatment systems are available. Alternative sanitary waste treatment systems should be identified

---

16 See footnote 9.

and described, relative to both waste products and to chemical additives for waste treatment.

V.C.2.i. Solid Waste Handling and Disposal System. The applicant should identify and describe all feasible alternative solid waste handling and disposal systems. Of special interest for power plants are the disposal systems for fly ash, bottom ash, and scrubber sludges.

Where a landfill is used as the ultimate point of disposal, alternative locations, both on-site and off-site, should be discussed. The possibility of using existing private and/or county facilities for off-site disposal should be discussed.

V.C.2.j. Stack Emission Control System. The applicant should identify and describe the stack emission systems considered as alternatives for the new source generating facility. Measures to reduce the discharge of contaminants or other aspects of each system that would lessen environmental effects should be discussed and compared. The ability of the systems to meet new source performance standards should be noted. The applicant also should state whether or not a scrubber bypass capability will be designed into the stack emission system.

VI. REGULATIONS OTHER THAN POLLUTION CONTROL

The applicant should be aware that various regulations other than pollution control may apply to the siting and operation of new power generating facilities. The applicant should consult with the appropriate EPA Regional Administrator regarding applicability of such regulations to the proposed new source. Some Federal regulations that may be pertinent to a proposed facility include, but are not limited to, the following:

- Coastal Zone Management Act of 1972 (16 USC 1451 et seq.)
- Fish and Wildlife Coordination Act of 1974 (16 USC 661-666)
- National Environmental Policy Act of 1969 (42 USC 4321 et seq.)
- USDA Agriculture Conservation Service Watershed Memorandum 108 (1971)
- Wild and Scenic Rivers Act of 1969 (16 USC 1274 et seq.)
- Flood Control Act of 1944
- Federal-Aid Highway Act, as amended (1970)
- Wilderness Act of 1964
- Endangered Species Preservation Act, as amended (1973) (16 USC 1531 et seq.)
- National Historical Preservation Act of 1966 (16 USC 470 et seq.)
- Executive Order 11593 (Protection and Enhancement of Cultural Environment, 16USC 470) (Sup. 13 May 1971)
- Archaeological and Historic Preservation Act of 1974 (16 USC 469 et seq.)
- Procedures of the Council on Historic Preservation (1973) (39 FR 3367)
- Occupational Safety and Health Act of 1970.
- Executive Order 11988 (Floodplain Management - replaced EO 11296 on 10 August 1966)
- Executive Order 11990 (Wetlands)

In connection with these regulations, the applicant should place particular emphasis on obtaining the services of a recognized archaeologist to determine the potential for disturbance of an archaeological site, such as an early Indian settlement or a prehistoric site. The National Register of Historic Places also should be consulted for historic sites such as battlefields. The applicant should consult the appropriate wildlife agency (State and

Federal) to ascertain that the natural habitat of a threatened or endangered species will not be affected adversely; other resource agencies also should be consulted to avoid or minimize impact to areas that previously have been determined to be sensitive or, uniquely important (wetlands, floodplains, prime farmland, etc.).

From a health and safety standpoint, most industrial operations involve a variety of potential hazards and to the extent that these hazards could affect the health of plant employees, they may be characterized as potential environmental impacts. All plant operators should emphasize that no phase of operation or administration is of greater importance than safety and accident prevention. Company policy should provide and maintain safe and healthful conditions for its employees and establish operating practices that will result in safe working conditions and efficient operation. All proposed plans to maximize health and safety should be described by the permit applicant in the EIA.

The plant must be designed and operated in compliance with the standards of the U.S. Department of Labor, the Occupational Safety and Health Administration, and the appropriate State statutes relative to industrial safety. The applicant also should coordinate closely with local and/or regional planning and zoning commissions to determine possible building or land use restrictions.

In addition to these regulations, State and local regulations may exist that affect the proposed power plant. For example, certain States have power plant siting regulations (see Section I.D.3) which must be considered. Individual State Public Service Commissions (PSC's) also should be consulted regarding their involvement in the planning process, because many PSC's require certification for construction and operation.

Table 16 presents a range of typical permits, licenses, certifications, and approvals that may be required from local, regional, State, and Federal officials for construction and operation of a new source power plant. Although this list doubtless will vary between jurisdictions, it is intented primarily to be illustrative. Further, the permit applicant could facilitate significantly the new source NPDES permit review process by documenting in the EIA, all permits, licenses, etc. which are known to be needed to construct and operate the proposed plant, and the status of each.

Table 16.

Typical permits, licenses, certifications, and approvals required from Federal, State, regional, and local authorities for construction and operation of a typical new source fossil-fueled power plant.

Agency	Requirement
• Local Planning Organization (regional, county, city)	• Rezoning of plant site
	• Approval of transmission line rights-of-way
	• Special exception for meterological tower
	• Minor subdivision plan approval of roads and plot plan
• Local Department of Public Works	• Permit for filling or construction operations in flood plains
• Local Beautification Board	• Construction on public property if required
• Local Department of Development and Licensing	• Building permit for meterological tower
	• Building permit for each structural component of station
	• Use and occupancy permits
• State Planning Department	• Coastal zone permit, if required
• State Fire Marshall	• Permit to store flammable liquids
	• Approval of facility for fire protection
• State Department of Natural Resources & Environmental Control	• Water use and discharge permit for cooling tower makeup and blowdown, including other discharges
	• Test well permit
	• Commercial well permit
	• Permit for dewatering excavation
	• Permit for fuel oil storage tanks

Table 16 (continued)

	• Dredging and construction of intake structure • Transmission line crossing of water bodies • Sedimentation control approval • Noise control approval • State water quality certification • Construction and operation of ash disposal area • Construction permit for combustion equipment • Registration of gaseous emissions • Permit to construct a dam
• State Air Pollution Control Department	• Permit for construction of stationary source of air pollutants covering the following anticipated sources: - Stock discharges (main and auxiliary boilers) - Coal pile dusting - Coal handling facilities - Ash disposal area - Open burning of construction refuse - Concrete batch plant • Review of indirect (mobile) emission sources
• State Board of Health	• Permit to construct and operate approved sewage disposal and potable water facilities
• State Public Service Commission	• Certificate of Public Convenience and Necessity for: (1) construction of station and (2) for transmission lines
• State Department of Highways and Transportation	• Construction permit and franchise for transmission line crossing of roads

Table 16 (continued)

	• Permit for highway entrance of plant access road
	• Approval of public road improvements
	• Permits for oversize or overweight vehicles
• US Environmental Protection Agency (Regional Office)	• National Pollutant Discharge Elimination System Permit (NPDES) for wastewater discharge
	• Prevention of Significant Deterioration of air quality (PSD) permit prior to commencement of construction activities
	• Waiver of Section 316(a) FWPCA requirements; certification of Section 316(b) requirements
• Federal Aviation Administration	• Notice to construct (review of lighting and marking): - Emission stacks - Transmission tower(s) - Meteorological tower(s) - Other structures 200 feet above ground unless shielded by topography, etc. also structures less than 200' if in flight path of an airport
• US Army Corps of Engineers, (District Office)	• Permit to construct structures or works* in navigable waters (Section 10, Rivers and Harbors Act 1899)
	• Permit to dispose of dredged or fill materials in waters of the US (including wetlands) (Section 404, FWPCA)
(COE, Washington Office)	• Permit to construct any dam or dike in a navigable water of the US (Section 9, Rivers of Harbor Act 1899)

* Structures may include piers, breakwaters, bulkheads, revetments, power transmission lines, underwater utility cables, and aids to navigation; works may include dredging, stream channelization, excavation and filling.

Table 16 (concluded).

	• Permit to ocean dump dredged materials (Section 103, Ocean Dumping Act),
	• Permit to dscharge refuse matter into navigable waters of the US or their tributaries (Section 13, The Refuse Act 1899)
	• Lease for cooling water pipes and in take structure on Federal land
	• Test boring on Federal land
Occupational Safety and Health Administration	• Certification of safety and health criteria for plan oepration (noise in the work place, etc.).

BIBLIOGRAPHY

Environmental Impact Assessment: General

Atomic Industrial Forum, Inc. 1974. General environmental guidelines for evaluating and reporting the effects of nuclear power plant site preparation, plant and transmission facility construction. Hittman Associates, Inc. Washington DC.

Baird, N. J., Jr. 1975. Guidelines for the preparation of environmental reports for fossil-fueled steam electric generating stations. US Department of the Interior Contract No. 14-31-0001-5238. Draft. United Engineers and Constructors, Inc., Philadelphia PA.

Battelle Columbus and Pacific Northwest Laboratories. 1973. Environmental considerations in future energy growth, Vol. 1: Fuel/energy systems: Technical summaries and associated environmental burdens. Columbus OH.

Chiang, S. S., and R. N. Snead. 1976. An annotated bibliography: social and economic factors associated with electric power generating stations. Atomic Industrial Forum, Inc. INFORUM-001, Washington DC.

Eichholz, Geoffrey. 1976. Environmental aspects of nuclear power. Ann Arbor Science.

Handbook for environmental planning, the social consequences of environmental change. 1977. Wiley.

Hittman Associates, Inc. 1974. Environmental impacts, efficiency, and cost of energy supply and end use, Volume I.

Jain, R. K. 1977. Environmental impact analysis, a new dimension in decision-making. Van Nostrand.

Karam, R. A., and K. Z. Morgan. eds. 1976. The environmental impact of nuclear power plants. Pergamon Press.

Leholm, Arlea G., F. Larry Leistritz, and James S. Wieland. 1976. Profile of electric power plant construction work force. Department of Agricultural Economics, North Dakota Agricultural Experiment Station, North Dakota State University, Fargo ND, Argicultural Economics Statistics Series Issue 22, 53 p.

MacFarlane, D. R., et al. 1975. Power facility siting in the state of Illinois. Part II. Environmental impacts of large energy conversion facilities. Illinois Institute for Environmental Quality.

Murphy, Brian, James R. Mahoney, David Bearg, Gale Hoffnagle, and Joel Watson. 1978. Energy consumption of environmental controls: Fossil fuel-steam electric generating industry. Final report. Prepared for U.S. Department of Commerce, Office of Environmental Affairs. Washington DC.

Temple, Barker and Sloan, Inc. 1976. Economic and financial impacts of federal air and water pollution controls on the electric utility industry.

US Bureau of Mines. 1974. Assessment of the impact of air quality requirements on coal in 1975, 1977, and 1980. Division of Fossil Fuels, Mineral Supplies.

US Environmental Protection Agency, Office of Federal Activities. 1975. Environmental impact assessment guidelines for selected new source industries. EPA, Washington, DC.

US Environmental Protection Agency, Office of Toxic Substances. 1978. Toxic substances control act (TSCA), PL 94-469. Candidate list of chemical substances. Addendum 3: Chemical substances of unknown or variable composition, complex reaction products and biological materials. EPA, Washington, DC.

US Environmental Protection Agency, Office of Federal Activities 1976. Guidelines for review of environmental impact statements. Vol 3, Impoundment Projects; Vol 4, Channelization Projects. Washington, DC.

US Environmental Protection Agency. 1976. Impact of construction activities in wetlands of the United States. Environmental Research Lab, Office of Research and Development, Corvallis, Oregon.

US Department of Interior, Fish and Wildlife Service. 1977. Steam electric power plant review manual. Washington, DC.

US Department of Interior. 1975. Considerations in evaluating utility line proposals. Resource and Land Investigations (RALI) Programs, Washington, DC.

US Atomic Energy Commission. 1975. General environmental siting guides for nuclear power plants. Washington, DC.

US Department of Interior, Bureau of Land Reclamation. 1978. Visual resource management. Washington, DC.

US Department of Interior, Bueau of Land Reclamation. 1970. The impact of power transmission lines. Washington, DC.

Air Emissions, Associated Impacts, and Control Technologies

Aghassi, William J., and Paul N. Cheremisinoff. 1975. NO_x control in central station boilers. Power Engineering, June.

Albrecht, P. F., and J. A. Lieberman. General Electric Co. 1975. Reliability of flue gas desulfurization systems. Power Engineering, June.

Armento, W. J. 1975. Effects of design and operating variables on NO_x from coal-fired furnaces - phase II. Prepared by Babcock and Wilcox Co., for the Office of Research and Development, USEPA, EPA-650/2-74-002-b, NTIS PB-241283, Feb.

Baruch, S. B. 1976. Trends in pollution control at coal-burning power plant. Paper presented at the American Power Conference, Chicago, April 20-22.

Botts, W. V., and R. D. Oldenkamp. 1972. The molten carbonate process for SO_2 removal from stack gases: process description, economics, and pilot plant design. Presented at 65th Annual Meeting of Air Pollution Control Association, Miami Beach FL, June.

Brown, R. A., H. B. Mason, and R. J. Schreiber. 1974. Systems analysis requirements for nitrogen oxide control of stationary sources. Prepared by Aerotherm/Acurex Corp. for the Office of Research and Development, USEPA, EPA-650-2-74-091, NTIS PB-237367, Sept.

Cogbill, C. V., and G. E. Likens. 1974. Acid precipitation in the northeastern United States. Water Resources Research 19:1133-1137.

Commerce Technical Advisory Board Panel on Sulfur Oxide Control Technology. 1975. Report on sulfur oxide control technology. Prepared for the US Department of Commerce, Sept.

Cooper, H. B. The ultimate disposal of ash and other solids from electric power generation. In: Water Management by the Electric Power Industry, Water Resour. Symp. No. 8, Center for Res. in Water Resour., Univ. of Texas at Austin TX.

Crawford, A. R., et al., Exxon Research and Engineering Company. 1975. The effect of combustion modification on pollutants and equipment performance of power generation equipment. Prepared for a Symposium on Stationary Source Combustion, Sept.

Crawford, A. R., et al. 1976. NO_x emission control for coal-fired utility boilers. Paper presented at the American Power Conference, Chicago, Apr. 20-22.

Cuffe, S. T., and R. W. Gerstle. 1966. Emissions from coal-fired power plants: a comprehensive summary. National Center for Air Pollution Control, prepared for the US Department of Health, Education, and Welfare, Public Health Service, NTIS PB 174708.

Environmental Research & Technology, Inc. 1975. An evaluation of sulfur dioxide control requirements for electric power plants. P-1547B, Apr.

Fuchs, N. A. 1964. The mechanics of aerosols. Pergamon Press.

Gottschlich, C. F. 1968. Source control by electrostatic precipitation. In: A. C. Stern, ed., Air Pollution, Volume III - Sources of Air Pollution and Their Control. Academic Press NY.

Henke, W. G. 1970. The new 'hot' electrostatic precipitator. Combustion, Oct.

Jaye, F. C. 1973. Monitoring instrumentation for the measurement of sulfur dioxide in stationary source emissions. R2-73-163. US EPA.

Kin, Y. K. 1974. Abatement of sulfur oxides from power plant stack gases. Proc. Integrated Symp. of Sci. and Techno., Seoul, Korea, July 29-August 2.

Larsen, R. I. 1971. A mathematical method for relating air quality measurements to air quality standards. US EPA.

LaMantia, C. R., R. R. Lunt, and I. S. Shah. 1975. Dual alkali process for SO_2 control. In: C. Rai and R. D. Siegel, eds., Air: II. Control of NO_x and SO_x Emissions, Am. Inst. Chem. Eng. Symp. Ser. No. 148, Vol. 71.

Miller, S. G. 1977. Analysis of the mechanisms of atmospheric sulfate formation. Proceedings of the 70th Annual Meeting of the Air Pollution Control Association, Toronto, Canada.

Oglesby, S., and G. B. Nichols. 1970. A manual of electrostatic precipitator technology. Part II: Application areas. Southern Research Institute, Aug.

Ottmers, D. M., Jr., P. S. Lowel, and J. G. Noblett. 1975. Energy and water requirement for air quality control. In: E. F. Gloyna et al., eds., Water Management by the Electric Power Industry, Water Resources Symp. No. 8, Center for Research in Water Resources, University of Texas at Austin, Austin TX.

Perl, Lewis J., and Joe D. Pace. The costs of reducing SO_2 emissions from electric generating plants. National Economic Research Associates, Inc., Apr.

Phelan, J. H., A. A. Reisinger, and N. H. Wagner. 1976. Design and operation experience with baghouse dust collectors for pulverized coal fire utility boilers - Sunbury Station, Holtwood Station. Paper presented at the American Power Conference, Chicago, April 20-22.

Proceedings of the First International Symposium on Acid Precipitation and the Forest Ecosystem. 1975. Columbus OH.

Ruch, R. R., H. J. Gluskoter, and N. F. Shimp. 1974. Occurrence and distribution of potentially volatile trace elements in coal. Environ. Geol. Note No. 72, Ill. State Geol. Surv.

Shriner, D. S., S. B. McLaughlin, and C. F. Bacs. 1977. Character and transformation of pollutants from major fossil fuel energy sources. Proceedings of the 70th Annual Meeting of the Air Pollution Control Association, Toronto, Canada.

Smith, W. S., and C. W. Gruber. 1966. Atmospheric emissions from coal combustion: An inventory guide. No. 999-AP-24. US HEW, Public Health Service.

Southern Research Institute. 1975. Survey of information on fine-particle control. Prepared for the Electric Power Research Institute, EPRI-259, NTIS PB-242383, Apr.

Stern, Arthur C., ed. 1968. Air pollution. Volume III: Sources of air pollution and their control, Academic Press, New York NY.

US Department of Health, Education, and Welfare. 1969a. Air quality criteria for particulate matter. Publication No. AP-49. National Air Pollution Control Administration.

US Department of Health, Education, and Welfare. 1969b. Control techniques for sulfur oxide air pollutants. Publication No. AP-52. National Air Pollution Control Administration.

US Department of Health, Education, and Welfare. 1969c. Air quality criteria for sulfur oxides. Publication No. AP-50. National Air Pollution Control Administration.

US Department of Health, Education, and Welfare. 1970a. Air quality criteria for photochemical oxidants. Publication No. AP-63. National Air Pollution Control Administration.

US Department of Health, Education, and Welfare. 1970b. Control techniques for nitrogen oxides for stationary sources. Publication No. AP-67. National Air Pollution Control Administration.

US Environmental Protection Agency. 1969. Control techniques for particulate air pollutants. Publication No. AP-51. Office of Air Programs.

US Environmental Protection Agency. 1971. Air quality criteria for nitrogen oxides. Publication No. AP-84. Air Pollution Control Office.

US Environmental Protection Agency. 1973. User's guide for the climatological dispersion model. R4-73-024.

US Environmental Protection Agency. 1974. Guidelines for air quality maintenance planning and analysis. Volume 11: Air quality monitoring and data analysis. 450/4-74-012.

US Environmental Protection Agency. 1975. Position paper on regulation of atmospheric sulfates. 450/2/75-007.

US Environmental Protection Agency. 1977. Statement of sulfates research approach. 600/8-77/004.

US Environmental Protection Agency. 1978. Environmental effects of increased coal utilization: ecological effects of gaseous emissions from coal combustion. 600/7-78-108.

US Nuclear Regulatory Commission. 1977. The environmental effects of using coal for generating electricity. Prepared by Argonne National Laboratory, Division of Environmental Impact Studies, Argonne Ill. Draft. Washington, D.C.

Vaughan, B. E., et al. 1975. Review of potential impact on health and environmenal quality from metals entering the environment as a result of coal utilization. Battelle Energy Program. Pacific Northwest Laboratories. Battelle Memorial Institute, Richland WA.

Effects of Air Emissions on Biota

Alarie, Y. C., et al. 1975. Long-term exposure to sulfur dioxide, sulfuric acid mist, fly ash, and their mixtures--results of studies in monkeys and guinea pigs. Arch. Environ. Health 30:254-262.

Berry, W. L., and A. Wallace. 1974. Trace elements in the environment - their role and potential toxicity as related to fossil fuels - a preliminary study. Univ. Calif. Lab. Nuclear Med. and Rad. Biol., AEC Contract No. AT)04-1) GEN 12.

Bromenshenk, J. J. 1975. Biological impact of air pollutants on insects. Proc. Fort Union Coal Field Symp., Vol. 5, Montana Acad. Sci., Billings, pp. 596-607.

Cardwell, R. D., et al. 1976. Acute toxicity of selenium dioxide to freshwater fishes. Arch. Environ. Contam. and Toxicol. 4:129-144.

Cogbill, C. V., and G. E. Likens. 1974. Acid precipitation in the Northeastern United States. Water Resour. Res. 10(6)1133-1137.

Davis, C. R. 1972. Sulfur dioxide fumigation of soybeans: Effect on yield. J. Air Pollut. Cont. Assoc. 22(12):964-966.

Durocher, N. L. 1969. Air pollution aspects of beryllium and its compounds. Litton Systems, Inc., Bethesda MD.

Doudoroff, P., and M. Katz. 1953. Critical review of literature on the toxicity of industrial wastes and their components to fish - II. The metals as salts. Sewage Ind. Wastes 25:802-839.

Environmental Protection Agency. 1973. Effects of sulfur oxides in the atmosphere on vegetation. Revised Chapter 5 for Air Quality Criteria for Sulfur Oxides, National Environmental Research Center, EPA-R3-73-030, Sept.

European Inland Fisheries Advisory Committee. 1969. Water quality criteria for European freshwater fish. Report on Extreme pH Values and Inland Fisheries, Water Research 3:593-611.

Gordon, C. C., and P. C. Tourangeau. 1975. Biological effects of coal-fired power plants. Proc. Fort Union Coal Field Symp., Vol. 5, Montana Acad. Sci., Billings, pp. 509-530.

Gorham, E., and A. G. Gordon. 1960. The influence of smelter fumes upon the chemical composition of lake waters near Sudbury, Ontario, and upon the surrounding vegetation. Can. J. Bot. 38:477-487.

Groth, E., III. 1975. An evaluation of the potential for ecological damage by Chronic, low-level environmental pollution by fluoride. Fluoride 8:224-240.

Haghiri, F. 1973. Absorption and uptake of cadmium by plants. Ohio Report on Research and Development, Vol. 58.

Hiatt, V., and J. E. Huff. 1975. The environmental impact of cadmium: an overview. Intern. J. Environ. Studies 7:277-285.

Hesketh, H. E. 1973. Understanding and controlling air pollution. Ann Arbor Sci. Publ., Ann Arbor, Mich. Cited in: J. B. Mudd and T. T. Kozlowski, Responses of plants to air pollution. Academic Press, New York, pp. 1-22, 1975.

Holland, W. R., et al. 1975. Environmental effects of trace elements from ponded ash and scrubber sludge. Rep. 202, Electric Power Research Institute, Palo Alto CA.

Horton, J. H., and R. S. Dorsett. 1976. Effect of stack releases from a coal-fired powerhouse on minor and trace element contents of neighboring soil and vegetation. Paper proposed for presentation at the Environmental Chemistry and Cycling Processes Symposium in Augusta, Georgia, April 28-30, 1976, and for publication in the proceedings, 1976.

Klein, D. H., and P. Russell. 1973. Heavy metals: fallout around a power plant. Environ. Sci. Technol. 7:357-358.

Klein, D. H., et al. 1975. Pathways of thirty-seven trace elements through coal-fired power plant. Environ. Sci. Technol. 9(10):973-979.

Livingston, R. G., et al. 1974. Synergism and modifying effects: interacting factors in bioassay and field research. In: Proc. of a workshop on marine bioassays, Geraldine V. Cox, ed., Marine Technol. Soc., 1730 M St., NW, Washington DC.

Loman, R. A., R. A. Blanel, and D. Hocking. 1972. Sulfur dioxide and forest vegetation. Rep. No. NOR-X-49, Northern Forest Research Center, Edmonton, Alberta.

Lowe, R. L. 1974. Environmental requirements and pollution tolerances of freshwater diatoms. EPA-670/4-74-005, US Environmental Protection Agency, Cincinnati OH.

Mose, B. 1973. The influence of environmental factors on the distribution of freshwater algae: An experimental study. II. The Role of pH and the Carbon Dioxide-Bicarbonate System, J. Ecol. 61:157-177.

Ricks, G. R., and R. H. J. Williams. 1974. Effects of atmospheric pollution on deciduous woodland, Part 2: Effects of particulate matter upon stomatal diffusion resistance in leaves of Quercus petraea (Mattuschka) Leibl. Environ. Pollut. 6:87-109.

Schofield, C. L. 1976. Effects of acid precipitation on fish. Presented at Int. Conf. on Effects of Acid Precipitation, June 1976. Telemark, Norway. In press.

Stahl, Q. R. 1969. Air pollution aspects of mercury and its compounds. Litton Systems, Inc., Bethesda MD.

Stahl, Q. R. 1969. Air pollution aspects of selenium and its compounds. Litton Systems, Inc., Bethesda MD.

Sullivan, R. J. 1969. Air pollution aspects of nickel and its compounds. Litton Systems, Inc., Bethesda MD.

Tennessee Valley Authority. 1974. Air pollution effects on soybeans. TVA Today, 5(3):2-3, Oct.

Treshow, M. 1970. Environment and plant response. McGraw-Hill Book Co., New York.

Vaughan, B. E., et al. 1975. Review of potential impact on health and environmental quality from metals entering the environment as a result of coal utilization. Battelle Energy Prog. Rep., Pacific Northwest Laboratories-Battelle Memorial Institute, Richland WA.

Wright, R. F. Undated. Acid precipitation and its effects on freshwater ecosystems: An annotated bibliography. Prod. First Int. Symp. on Acid Precip. and the Forest Ecosystem, Ohio State Univ. In press.

US Environmental Protection Agency. 1975. Preliminary investigation of effects on the environment of Boron, Indium, Nickel, Selenium, Tin, Vanadium and their compounds, Vol. VI Vanadium. Office of Toxic Substances, USEPA, EPA-560/2-75-005F.

Effects of Air Emissions on Human Health

Bulka, J. J., and T. H. Risby. 1976. Ultratrace metals in some environmental and biological systems. Analytical Chemistry 48(8):640A, Jul.

Casarret, L. J., and J. D. Doull, eds. 1975. Toxicology: the basic science of poisons. Macmillan, New York.

Comar, C. L., and L. A. Sagan. 1976. Health effects of energy production and conversion. In: J. M. Hollander, ed., Annual Review of Energy 1:581-600.

Freudenthal, R. I., et al. 1975. Carcinogenic potential of coal and coal conversion products. A Battelle energy report. Battelle Columbus Laboratories, Columbus OH, Feb.

Hackney, A. J. 1975. Relationship between air pollution and cardiovascular disease; a review. In: A. J. Finkel and W. C. Dues, eds., Clinical implications of air pollution research, AMA Air Pollution Medical Research Conference, Dec 5-6 1976. Publishing Sciences Group, Acton MD.

Hamilton, L. D., ed. 1974. The health and environmental effects of electricity generation - a preliminary report. Cited in C. L. Comar and L. A. Sagan. 1976. Health effects of energy production and conversion. In: J. M. Hollander, ed., Annual Review of Energy 1:581-600.

Klein, D. N., et al. 1975. Pathways of thirty-seven trace elements through coal-fired power plants. Environ. Sci. Technol. 9(10):973-979, Oct.

Aquatic Biota: Impact Assessment

Brungs, W. A., and B. R. Jones. 1977. Temperature criteria for fresh-water fish: Protocol and procedures. US-EPA, Environmental Research Laboratory, Duluth MN.

Dynatech R/D Company, Cambridge, Massachusetts. 1969. A survey of alternate methods for cooling condenser discharge water - large scale heat rejection equipment. For: Water Quality Office, EPA, July.

Hartman, R. 1976. Proposed ANSI guide for aquatic ecological surveys at thermal power plants. In: Proceedings of the Conference on Waste Heat Management and Utilization, Miami Beach FL.

Jacbos, Fred, and George C. Grant. 1978. Guidelines for zooplankton sampling in quantitative baseline and monitoring programs. EPA-600/3-78-026. US-EPA Environmental Research Laboratory, Corvallis OR.

Jenson, Lauren D. 1977. Biofouling control procedures. Marcel Dekker, Inc., New York NY.

Kjelson, M.A. 1977. Estimating the size of juvenile fish populations in southeastern coastal plain estuaries. In: Proceedings of the Conference on Assessing the Effects of Power-Plant-Induced Mortality of Fish Populations, Gatlinburg TN, pp. 71-89.

McFadden, J. T. 1975. Environmental impact assessment for fish populations. In: Proceedings, Workshop on Biological Significance of Environmental Impacts, NR-CONF-002, US Nuclear Regulatory Commission, Washington DC, pp. 89-137.

Sonnichsen, J. C., W. E. Farr, and H. S. Riesbol. 1975. Fish protective devices: A compilation of recent designs, concepts, and operating experience of water intakes used in the United States. HEDL-TME-75-38 UC-79. Energy Research and Development Administration, Hanford Engineering Development Laboratory, Richland WA.

Stofan, Paul E., and George C. Grant. 1978. Phytoplankton sampling in quantitative baseline and monitoring programs. EPA-600/3-78-025. US-EPA, Environmental Research Laboratory, Corvallis OR.

US Army Corps of Engineers. 1977. Regulatory program of the Corps of Engineers: Final rules. Federal Register, Vol. 42, No. 138, Tues., July 19, pp. 37122-37164.

US Department of the Interior, Office of Water Research and Technology and Office of Environmental Project Review. 1976. Guidelines for the preparation of environmental reports for fossil-fueled steam electric generating stations. Washington DC.

US Environmental Protection Agency. 1973. Biological field and laboratory methods manual. EPA-670/4-73-001, Washington DC.

US Environmental Protection Agency. 1974. Development document for effluent limitations guidelines and new source performance standards for the steam electric power generating point source category. EPA Publication Number 440/1-74/029a, Group 1.

US Environmental Protection Agency. 1975. A state-of-the-art report on intake technologies. Tennessee Valley Authority. EPA-600/7-76-929.

US Environmental Protection Agency. 1976. Development document for best technology available for the location, design, construction, and capacity of cooling water intake structures for minimizing adverse environmental impact. EPA Publication Number 440/1-76/015-a.

US Environmental Protection Agency. 1977a. Interagency 316(a) technical guidance manual and guide for thermal effects of nuclear facilities environmental impact statements. Draft. Washington DC.

US Environmental Protection Agency. 1977b. Guidance for evaluating the adverse impact of cooling water intake structures on the aquatic environment. Section 316(b). Public Law 92-500. Draft. Washington DC.

Van Winkle, W. 1977. Proceedings of the Conference on Assessing the Effects of Power-Plant Induced Mortality on Fish Populations. Permagon Press, New York NY.

Solid Waste Generation, Associated Impacts, and Control Techniques

Bradford, G. R., et al. 1975. Trace element concentrations of sewage plant effluents and sludges; their interactions with soils and uptake by plants. J. Environ. Quality 4:123-126, Jan-Mar.

Bucklen, O. B., and P. G. Meikle. 1968. Coal storage and loading. In: J. W. Leonard and D. R. Mitchell, eds., Coal Preparation, Am. Inst. Min. Met. Petrol. Eng., New York, pp. 15-1 to 15-62.

Carlton, D. M., and O. W. Hargrove. 1976. Impediments to the utilization of flue gas desulfurization systems. Radian Corporation, P. O. Box 9948, Austin TX, June.

Cooper, H. B. 1975. The ultimate disposal of ash and other solids from electric power generation. In: Water Management by the Electric Power Industry, Water Resour. Symp. No. 8, Center for Res. in Water Resour., Univ. of Texas at Austin TX.

Hecht, N. L., and D. S. Duvall. 1975. Characterization and utilization of municipal and utility sludges and ashes. Volume III. Utility coal ash. EPA-670/2-75-033C, NERC-EPA, May.

Holland, W. F., et al. 1975. Environmental effects of trace elements from ponded ash and scrubber sludge. Rep. 202, Electric Power Research Institute, Palo Alto CA.

Klein, D. H. et al. 1975. Pathways of thirty-seven trace elements through coal-fired power plant. Environ. Sci. Technol. 9(10):973-979.

Lord, W. H. 1976. Disposal of sludge from flue gas desulfurization. Pollution Engineering, pp. 40-41, June.

US Bureau of Mines. 1974. Potential solid waste generation and disposal from lime and limestone desulfurization processes. Bureau of Mines Information Circular #8633.

Modeling of Impacts: Thermal Plumes; Air Quality

Benedict, Barry, A., Jerry L. Anderson, and Edgar L. Yandell, Jr. 1974. Analytical modeling of thermal discharges--a review of the state of the art. Argonne National Laboratory for the U.S. Atomic Energy Commission, National Technical Information Service.

Butz, Brian P., Donald R. Schregardus, Barbara-Ann Lewis, Anthony J. Policastro, and James J. Reisa, Jr. 1974. Ohio River cooling water study. Argonne National Laboratory, EPA-905/9-74-004, June.

Carter, H. H. 1969. A preliminary report on the characteristics of a heated jet discharged horizontally into a transverse current. Part I: Constant depth. Technical report no. 61. Johns Hopkins University, Chesapeake Bay Institute, Baltimore MD, November.

Csanady, G. T. 1970. Dispersal of effluents in the Great Lakes. Water Research 4:79-114, January.

Dunn, William E., Anthony J. Policastro, and Robert A. Paddock. 1975a. Water resources program, surface thermal plumes: evaluation of mathematical models for the near and complete field. National Technical Information Service, Volume 1, May.

Dunn, William E., Anthony J. Policastro, and Robert A. Paddock. 1975b. Water resources research program, surface thermal plumes: evaluation of mathematical models for the near and complete field. National Technical Information Service, Volume II, August.

Edinger, J. E., and J. C. Geyer. 1965. Heat exchange in the environment. Edison Electric Institute, New York NY.

Edinger, J. E., and E. M. Polk, Jr. 1969. Initial mixing of thermal discharges into a uniform current. Report no. 1. Vanderbilt University, Nashville TN, October.

Ellis, Dr. H. M. et al., Enviroplan Inc. 1975. Predicting SO_2 impact from 1000 MW power plant. Power, July.

Harleman et al. 1973. A predictive model for transient temperature distributions in unsteady flows. Ralph M. Parsons Laboratory for Water Resources and Hydrodynamics. MIT Technical Report no. 175.

Harrison, Elizabeth A., ed. 1977. Ecosystem models. Volume 2: November 1975-November 1977. A bibliography with abstracts NTISearch No. PS-77/1011. NTIS, Springfield VA.

HEDL Environmental Engineering. 1972. The COLHEAT river simulation model. HEDL-TME 72-103, Hanford Engineering Development Laboratory, Richland WA.

Hirst, Eric. 1971. Analysis of round, turbulent, buoyant jets discharged to flowing ambients. Oak Ridge National Laboratory Report, ORNL-TM-3470.

Hoopes, J. A., R. W. Zeller, and G. A. Rohlich. 1969. Heat dissipation and induced circulations from condenser cooling water discharges into Lake Monona. Report no. 35. University of Wisconsin, Madison WI, February.

Jirka, Gerhard H., Gerrit Abraham, and D. R. F. Harleman. 1976. An assessment of techniques for hydrothermal prediction. Prepared for the U.S. Nuclear Regulatory Commission, National Technical Information Service, March.

Kolesar, D. C., and J. C. Sonnichsen, Jr. Undated. TOPLYR-II: A two-dimensional thermal energy transport code. Hanford Engineering Development Laboratory, Richland WA.

Lee, Samuel S., and Subrata Sengupta, eds. 1977. Proceedings of the conference on waste heat management utilization. Volumes I, II, III. Miami Beach, Florida. May 9-11.

Lietzke, M. H. 1977a. A validation of the kinetic model for predicting the composition of chlorinated water discharged from power plant cooling systems. Prepared for the U.S. Nuclear Regulatory Commission, Oak Ridge National Laboratory, December.

Lietzke, M. H. 1977b. A kinetic model for predicting the composition of chlorinated water discharged from power plant cooling systems. Prepared for the U.S. Nuclear Regulatory Commission, Oak Ridge National Laboratory, April.

Manage, K., Y. Watanabe, and A. Wada. 1966. Study on recirculation of cooling water of Tsuruga Nuclear Power Station sited on Vrayoke Bay. Coastal Engineering in Japan: 9.

Motz, L. H., and B. A. Benedict. 1970. Heater surface jet discharged into a flowing ambient stream. Report No. 4. Vanderbilt University, Department of Environmental and Water Resource Engineering, Nashville TN, August.

Ohio River Valley Water Sanitation Commission. 1972. Automated forecast procedures for river quality management--Item 1: Project report. Cincinnati OH.

Ott, Wayne R., ed. 1976. Proceedings of the EPA conference on environmental modelings and simulation, Cincinnati, Ohio. U.S. Environmental Protection Agency, April.

Parker, F. L., Barry A. Benedict, and Chii-Ell Tsai. 1975. Evaluation of mathematical models for temperature prediction in deep reservoirs. Ecological Research Series, Environmental Protection Agency, June.

Policastro, A. J., et al. 1972. Heated effluent dispersion in large lakes: state-of-the-art of analytical modeling. Part I: Critique of model formulations. Argonne National Laboratory, Argonne IL, January.

Policastro, A. J., and W. E. Dunn., Thermal pollution modeling. American Geophysical Union. Water Resources Monograph Series to be published in 1978.

Pritchard, D. W. 1969. Modeling of heated discharges. Johns Hopkins University, Chesapeake Bay Institute, Baltimore MD, August.

Ryan, Patrick J., and D. R. F. Harleman. 1973. An analytical and experimental study of transient cooling pond behavior. Ralph M. Parsons Laboratory for Water Resources and Hydrodynamics, Report No. 161, MIT, January.

Ryan, Patrick J., and D. R. F. Harleman. 1971. Prediction of the annual cycle of temperature changes in a stratified lake or reservoir. MIT Laboratory Report no. 137, Cambridge MA.

Senshu, S., and A. Wada. 1965. Thermal diffusion of cooling water into the stratified sea basin. In: Proceedings, 11th Congress of the International Association of Hydraulic Research. Leningrad USSR, pp. 286-293.

Shirazi, M. A., et al. 1973. An evaluation of ambient turbulent effects on a buoyant plume model. Proceedings of the 1973 Summer Computer Simulation Conference. Montreal, Quebec, Canada.

Shirazi, M. A., and Lorin A. Davis. 1972. Workbook of thermal plume prediction. Volume 1, Submerged discharge. National Environmental Research Center, Corvallis OR. U.S. Government Printing Office, August.

Shirazi, M. A., and Lorin A. Davis. 1974. Workbook of thermal plume prediction. Volume 2, Surface discharge. National Environmental Research Center, Corvallis OR. U.S. Government Printing Office, May.

Stolzenback, K., and D. R. F. Harleman. 1971. An analytical and experimental investigation of surface discharges of heated water. Technical Report no. 135. Massachusetts Institute of Technology, Hydrodynamics Laboratory, February.

Sundaram, T. R., C. C. Easterbrook, K. R. Piech, and G. Rudinger. 1969a. An investigation of heat release patterns associated with present and planned electric power plants on Cayuga Lake. Final Report Summary, CAL no. VT-2616-0-1. Comell Aeronautical Laboratory, Inc., November.

Sundaram, T. R., C. C. Easterbrook, K. R. Piech, and G. Rudinger. 1969b. An investigation of the physical effects of thermal discharges into Cayuga Lake (analytical study). CAL no. VT-2616-0-2. Comell Aeronautical Laboratory, Inc., November.

US Environmental Protection Agency. 1977. Interim guideline on air quality models. Washington DC.

US Nuclear Regulatory Commission. 1976. Estimating aquatic dispersion of effluents from accidental and routine reactor releases for the purpose of implementing appendix 1. Office of Standards and Development, May.

Wada, A. 1968. Studies of prediction of recirculation of cooling water in a bay. In: Proceedings, 11th Conference on Coastal Engineering, London UK.

Wnek, W. Undated. Mathematical model for the dispersion of heat into a lake. Illinois Institute of Technology Research.

Electric Power Transmission Lines

General

Bonneville Power Administration. 1977. Electrical and biological effects of transmission lines: A review. BPA, US Department of the Interior, Portland, Oregon. 64 p.

Daily, N.S . (ed.). 1978. Environmental aspects of transmission lines - A selected, annotated bibliography. ORNL/EIS-122. Oak Ridge National Laboratory, Oak Ridge, Tenn. 192 p.

Electric Power Research Institute. 1975. Transmission line reference book, 345 kV and above. Palo Alto CA.

Electrical World. 1972. Transmission goals: Maximum rating with minimum environmental impacts, June.

US Department of the Interior and US Department of Agriculture. 1971. Environmental criteria for electric transmission systems. Washington DC.

Noise Effects

Coquard, A., and C. Gary. 1972. Audible noise produced by electrical power transmission lines at very high voltage. CIGRE Paper 36-03.

IEEE Committee Report. 1972. A guide for the measurement of audible noise from transmission lines. In: IEEE transactions: Power apparatus and systems, Vol. PAS-91, pp. 857-864, May/June.

Fletcher, John L. and R. G. Busnel eds. 1978. Effects of noise on wildlife. Academic Press, Inc. New York, NY, 320 p.

Peterson, Arnold P. G., and Ervin E. Gross, Jr. 1967. Handbook of noise measurements. Sixth edition. General Radio Co., West Concord MA.

Radio and Television Interference

Aggers, C. V., D. E. Foster, and C. S. Young. 1940. Instruments and methods of measuring radio noise. In: AIEE Transactions, Vol. 59, pp. 178-192.

Clark, C. F., and M. O. Loftness. 1970. Some observations of foul weather EHV television interference. In: IEEE transactions: Power apparatus and systems, Vol. PAS-90, No. 6., July/August.

Jeuette, G. W. 1972. Evaluation of television interference from high-voltage transmission lines. In: IEEE transactions: Power apparatus and systems, Vol. PAS-91, No. 3, pp. 865-873, May/June.

Jeuette, G. W., and L. E. Zaffanella. 1970. Radio noise, audible noise, and corona loss of EHV and UHV transmission lines under rain: Predetermination based on cag tests. In: IEEE transactions: Power apparatus and systems, Vol. PAS-89, No. 6, pp. 1168-1178, July/August.

LaForest, J. J. 1968. Seasonal variations of fair-weather radio noise. In: IEEE transactions: Power apparatus and systems, Vol. PAS-87, No. 4, pp. 928-931, April.

Pakala, W. E., and V. L. Chartier. 1971. Radio noise measurements on overhead power lines from 2.4 to 800 kV. In: IEEE transactions: Power apparatus and systems, Vol. PAS-90, No. 3, pp. 1155-1165, May/June.

Corona Effects

Anderson, J. G., M. Baretsky, and D. D. MacCarthy. 1966. Corona loss characteristics of EHV transmission lines based on project EHV research. In: IEEE transactions, Vol. PAS-85, No. 12, pp. 1196-1212, December.

Clade, J. J., C. H. Gary, and C. A. LeFevre. 1969. Calculation of corona losses beyond the critical gradient in alternating voltage. In: IEEE transactions: Power apparatus and systems, Vol. PAS-88, pp. 695-703.

Clade, J. J., and C. H. Gary. 1970. Predetermination of corona losses under rain. Experimental interpreting and checking of a method to calculate corona losses. In: IEEE transactions: Power apparatus and systems, Vol. PAS-89, pp. 853-859.

IEEE Committee Report. 1972. A guide for the measurement of audible noise from transmission lines. In: IEEE transactions: Power apparatus and systems, Vol. PAS-91, pp. 853-856, May/June.

Naef, O., et al. 1951. Techniques of corona loss measurement and analysis: 500 kV test project of the American Gas and Electric Company. In: IEEE transactions: Power apparatus and systems, Vol. 70, Pt. I, pp. 496-506.

Electrostatic Effects

Asanova, T. P., and A. I. Rakov (USSR). 1966. The state of health of persons working in electric field of outdoor 400 and 500 kV switchyards. Hygiene of Labor and Professional Diseases, No. 5.

Deno, D. W. 1974. Calculating electrostatic effects of overhead transmission lines. Paper No. T-47-086-5, IEEE Power Winter Meeting, New York NY, January.

Endrenyi, J. 1967. Analysis of transmission tower potentials during ground faults. In: IEEE transactions: Power ground apparatus and systems, pp. 1274-1283.

Gross, E. T. B., and M. H. Hesse. 1973. Electrostatically induced voltage above high voltage lines. Journal of the Franklin Institute 295(2), February.

IEEE. 1972. Electrostatic effects of overhead transmission lines. Pt. I: Hazards and effects. IEEE transactions: Power aparatus and systems, Vol. PAS-91, No. 2, pp. 422-426, March/April.

IEEE. 1972. Electrostatic effects of overhead transmission lines. Pt. II: Methods of calculation. IEEE transactions: Power apparatus and systems, Vol. PAS-91, No. 2, pp. 426-444, March/April.

IEEE. 1973. Electromagnetic effects of overhead transmission lines. Practical problems, safeguards, and methods of calculation. Paper No. T73, pp. 441-443.

Korobkova, V. P., Y. A. Morozov, M. D. Stolarov, and Y. A. Yakub (USSR). 1972. Influence of the electric field in 500 and 750 kV switchyards on maintenance and means for its protection. Conference on Large High Tension Electric Systems (CIGRE) Paper 23-06.

Kouwenhoven, W. B., O. R. Langworthy, M. L. Singewald, and G. G. Knickerbocker. 1967. Medical evaluation of men working in AC electric fields. In: IEEE transactions: Power apparatus and systems, pp. 506-511.

Takago, T., and T. Muto. 1971. Influences upon bodies and animals of electrostatic induction caused by 500 kV transmission lines. Electrical Engineering (Japan), February.

US Department of the Navy. 1977. Seafarer elf communication system: Final environmental impact statement for site selection and test operation. Washington, DC.

US Office of the President. 1973. Program for control of electromagnetic pollution of the environment: The assessment of biological hazards of nonionizing electromagnetic radiation. Office of Telecommunication Policy.

USSR. 1971. Rules and regulations on labour protection at 400, 500, and 750 kV AC substations and overhead lines of industrial frequency. USSR SCNTY, Orgies.

Ozone Generation

Frydman, M., A. Levy, and S. Miller. 1972. Oxidant measurements in the vicinity of energized 765 kV lines. IEEE T-72-551-0.

Scherer, H. N., Jr., B. J. Ware, and C. H. Shih. 1972. Gaseous effluents due to EHV transmission line corona. IEEE T-72-550-2.

Whitmore, F. C., and R. L. Durfee. 1973. Determination of coronal ozone production by high voltage transmission lines. EPA-650/4-73-003. US Environmental Protection Agency.

Right-of-Way Management Techniques

Bramble, W. C., and W. R. Byrnes. 1972. Development of game food and cover on a sprayed right-of-way. Ind. Vegetation Management 4(2):8-10.

Cody, J. B. 1975. Vegetation management on power line rights-of-way: A state-of-the-knowledge report. Research Report No. 28. Applied Forestry Research Institute, Syracuse NY.

Cody, J. B., and John R. Quimby. 1975. Vegetation management on utility rights-of-way: An annotated bibliography. Research Report No. 27. Applied Forestry Research Institute, Syracuse NY.

Egler, F. E. 1949. Right-of-way maintenance by plant community management. Aton Forest, Norfolk CT, p. 19.

Francisco, D. C. 1974. Environmental considerations in planning a brush control program on utility rights-of-way. Util. Arbor. Assn. Newsletter 5(5):2-5.

Gillespie, J. L. 1973. Meeting the aesthetic and environmental challenge in land clearing with machines. Util. Arbor. Assn. Newsletter 2(2):3-9.

Hall, W. C., and W. A. Niering. 1959. The theory and practice of successful selective control of "brush" by chemicals. In: Proceedings, Northeast Weed Control Conference 13:254-256.

Lawrence, W. H. 1967. Effects of vegetation management on wildlife. In: Symposium proceedings: Herbicides and vegetation management. Oregon State University, Corvallis OR, pp. 88-93.

Leith, R. H. 1974. Control of brush by grassing of transmission right-of-way. Proceedings, Southern Weed Sci. Soc. 27:234-235.

Niering, W. A. 1958. Principles of sound rights-of-way vegetation management. Econ. Bot. 12(3):140-144.

Niering, W. A., and R. H. Goodwin. 1974. Creation of relatively stable shrublands with herbicides: Arresting "succession" on rights-of-way and pastureland. Ecology 55(4)784-795.

Randall, W. E. 1973. Multiple use potential along power transmission rights-of-way. In: R. Goodland. ed. Power lines and the environment. Cary Arboretum, Millbrook NY, pp. 89-113.

Rossman, W. R. 1972. Power line rights-of-way management through selective use of herbicides. Ind. Vegetation Management 4(3):2-6.

Tillman, Robert. ed. 1976. Proceedings of the First National Symposium on Environmental Concerns in Rights-of-Way Management, January 6-8, 1976. Mississippi State University. Available from D. H. Arner, Drawer LW, Mississippi State University MS

US Department of the Interior and US Department of Agriculture. 1971. Environmental criteria for electric transmission systems. Washington DC.

Wagner, J. F. 1971. Creating wildlife habitat on utility rights-of-way. Ind. Vegetation Management 3(1):15-17.

Biocide Use and Effects

Allen, J. R., and L. A. Carstens. 1967. Light and electron microscopic observations in Maraca mulatta monkeys fed toxic fat. Am. Jour. Vet. 28:1513.

Altom, J. D., and J. F. Stritzke. 1973. Degradation of cidamba, picloram, and four phenoxy herbicides in soils. Weed Science 21(6):556-560.

Bohmont, B. L. Toxicity of herbicides to livestock, fish, honeybees, and wildlife. In: Proceedings, 20th Western Weed Conference 21:25-27.

Butler, P. A. 1965. Effects of herbicides on estuarine fauna. In: Proceedings, Southern Weed Conference 18:576-580.

Coring, C. A. I., J. D. Griffith, F. C. O'Melia, H. H. Scott, and C. R. Youngson. 1967. The effects of tordon on microorganisms and soil biological processes. Down to Earth 22(4):14-17.

Council for Agricultural Science and Technology (CAST). 1975. The phenoxy herbicides. Weed Science 23(3):253-263.

Edson, E. F., and D. M. Sanderson. 1965. Toxicity of the herbicides 2-methoxy-3, 6-dichlorobenzoic (Dicamba), and 2-methoxy 3,5,6-trichlorobenzoic acid (Tricaba). Food Cosmet. Toxicol. 3:299-304.

Hardy, J. L. 1966. Effect of tordon herbicide on aquatic food chain organisms. Down to Earth 22(2):11-13.

Harvey, R. G. 1975. Benefits and hazards of herbicides. Ind. Vegetation Management 7(1):8-12.

Herr, D. E., E. W. Strouble, and D. A. Ray. 1966. The movement and persistence of picloram in soil. Weeds 14:248-250.

Lynn, G. E. 1965. A review of toxicological information on tordon herbicides. Down to Earth 20(4):68.

Macek, K. J. 1969. Biological magnification of pesticide residues in food chains. In: The biological impact of pesticides in the environment. Environmental Health Service 1. Oregon State University, Corvallis OR.

Spector, W. S. ed. 1955. Handbook of toxicology. Technical Report 55-16, Vol. 1. NAS-NRS Wright Air Development Center.

Tucker, R. K., and D. G. Crabtree. 1970. Handbook of toxicity of pesticides to wildlife. Resource Publication No. 84. US Fish and Wildlife Service, p. 131.

Williams, C. S. 1971. Fate of tordon herbicides containing picloram in the ecosystem. Ind. Vegetation Management 3(1):18-20.

Assessment of Transportation-Related Impacts

Armbruster, F. E., and B. J. Candela. 1976. Research analysis of factors affecting transportation of coal by rail and slurry pipeline. 2 Vols., HI-2409 RR, Hudson Institute, Croton-on-Hudson.

Council on Environmental Quality. 1973. Electric power.

Darling, E. M., Jr. 1972. Computer modeling of transportation-generated air pollution: A state-of-the-art survey. Report No. DOT-TSC-OST-72-20. US Department of Transportation, Washington DC, June.

Gray, W. S., and P. F. Mason. 1975. Slurry pipelines: What the coal man should know in the planning stages. Coal Age 80(8):58-62.

Highway Research Board. 1971. Highway noise: A design guide for highway engineers. NCHRP 117. Washington DC.

Kopperdall, F. R. et al. undated. Water quality of some logged and unlogged California streams. Inland Fisheries Administrative Report No. 71-12, Resources Agency of California, Dept. of Fish and Game.

National Cooperative Highway Research Program. 1970. Effects of deicing salts on water quality and biota: Literature review and recommended research. Report 91. Highway Research Board, Washington DC.

US Atomic Energy Commission. 1974. Comparitive risk-cost-benefit study of alternative sources of electrical energy. WASH-1224, AEC.

US Department of Transportation. 1975. Environmental assessment notebook series. Volumes 1-6. DOT P-5600.4. Washington DC.

US Energy and Resources Development Administration. 1975. Synthetic fuels commercialization progarm. Draft Environmental Statement, ERDA-1547, Energy and Res. Develop. Admin., Dep. of Interior.

Raw Material Handling, Associated Impacts, and Control Technologies

Bucklen, O. B., and P. G. Meikle. 1968. Coal storage and loading. In: J. W. Leonard and D. R. Mitchell, eds., Coal Preparation, Am. Inst. Min. Met. Petrol. Eng., New York, pp. 15-1 to 15-62.

Deurbrouck, A. W., and P. S. Jacobsen. 1974. Coal cleaning - state of the art. Pittsburgh Energy Research Center, US Department of the Interior, Bureau of Mines, Oct.

Hecht, N. L., and D. S. Duvall. 1975. Characterization and utilization of municipal sludges and ashes. Volume III. Utility coal ash. EPA-670/2-75-033C, NERC-EPA, May.

National Academy of Sciences. 1975. Mineral resources and the environment. Washington DC.

US Department of Interior. 1976. Final environmental impact statement, Kaiparowits Project. Bureau of Land Management, Washington DC.

US Environmental Protection Agency. National primary and secondary ambient air quality standards. 36FR22384, Nov. 1971, and 38FR25678, Sept. 1973.

Williams, R. E. 1975. Mined area reclamation. In: Waste Production and Disposal, Miller Freeman Publications, San Francisco CA.

Noise Generation, Associated Impacts, and Control Technologies

Beranek, L. L. 1971. Noise and vibration control. McGraw Hill.

Bolt, Beranek, and Newman, Inc. 1971. Noise from construction equipment operations, building equipment, and home appliances. A report prepared for the US EPA. Washington DC.

Capano and Bradley. 1974. Acoustical impact of cooling towers. Acoustical Society of America.

Reilly, J. P. 1976. Power plant noise models for community impacts studies. NOISEXPO Proceedings.

US Department of Housing and Urban Development. 1974. Noise assessment guidelines. Report TE/NA 172.

US Environmental Protection Agency. 1971. Effects of noise on wildlife and other animals. Washington DC

US Environmental Protection Agency. 1974. Levels of environmental noise requisite to protect public health and welfare with an adequate margin of safety. Report 550/9-74-004. Washington DC.

Wells, F. J. 1972. Power plant acoustical treatment for noise control. Institute of Noise Control Engineering.

TECHNICAL REPORT DATA
(Please read Instructions on the reverse before completing)

1. REPORT NO. EPA-130/6-79-001	2.	3. RECIPIENT'S ACCESSION NO.
4. TITLE AND SUBTITLE Environmental Impact Assessment Guidelines for New Source Fossil Fueled Steam Electric Generating Stations		5. REPORT DATE 1979
		6. PERFORMING ORGANIZATION CODE
7. AUTHOR(S) David B. Boies, D. Keith Whitenight, Raymond B. Bogardus, and Frank Parker		8. PERFORMING ORGANIZATION REPORT NO. 613/A
9. PERFORMING ORGANIZATION NAME AND ADDRESS WAPORA, Inc. 6900 Wisconsin Avenue, N.W. Washington, D.C. 20015		10. PROGRAM ELEMENT NO.
		11. CONTRACT/GRANT NO. 68-01-4157, Task 003a
12. SPONSORING AGENCY NAME AND ADDRESS EPA, Office of 401 M Street, S.W. Washington, D.C. 20460		13. TYPE OF REPORT AND PERIOD COVERED Final
		14. SPONSORING AGENCY CODE EPA/100/102

15. SUPPLEMENTARY NOTES

EPA Task Officer is John Meagher, (202)755-0790

16. ABSTRACT

The report provides guidance for evaluating the environmental impacts of a proposed fossil fueled steam electric generating station requiring a new source National Pollutant Discharge Elimination System (NPDES) permit from the Environmental Protection Agency (EPA) to discharge wastewater to the navigable waters of the U.S. The guidelines are intended to assist in the identification of potential impacts, and the information requirements for evaluating such impacts, in an Environmental Impact Assessment (EIA). An EIA is a document prepared for EPA by a new source permit applicant; it is used by the Agency to determine if the preparation of an Environmental Impact Statement (EIS) is warranted for the proposed facility.

The report includes guidance on (1) identification of potential wastewater effluents, air emissions, and solid wastes from fossil fueled steam electric generating stations, (2) assessment of the impacts of such residuals on the quality of the environment, (3) state-of-the-art technology for in-process and end-of-process control of waste streams, (4) evaluation of alternatives, and (5) environmental regulations that apply to the industry. In addition, the guidelines include an "overview" chapter that gives a general description of the fossil fuel power industry, significant problems associated with it, and recent trends in location, raw materials, processes, pollution control, & the demand for industry output.

17. KEY WORDS AND DOCUMENT ANALYSIS

a. DESCRIPTORS	b. IDENTIFIERS/OPEN ENDED TERMS	c. COSATI Field/Group
Thermal Power Plants Water Pollution Air Pollution	Environmental Impact Assessment	10A 13B

18. DISTRIBUTION STATEMENT Release Unlimited	19. SECURITY CLASS (This Report) Unclassified	21. NO. OF PAGES 153
	20. SECURITY CLASS (This page) Unclassified	22. PRICE

EPA Form 2220-1 (9-73)

* U.S. GOVERNMENT PRINTING OFFICE 1979 -281-147/107