EPA-340/1-89-001

HOSPITAL WASTE INCINERATOR FIELD INSPECTION AND SOURCE EVALUATION MANUAL

Prepared by:

Midwest Research Institute
Suite 350
401 Harrison Oaks Boulevard
Cary, North Carolina 27513

Contract No. 68-02-4463
Work Assignment No. 6

Prepared for:

James Topsale, Region III
Pam Saunders, Headquarters

U. S. Environmental Protection Agency
Stationary Source Compliance Division
Office of Air Quality Planning and Standards
Washington, D.C. 20460

February 1989

DISCLAIMER

This manual was prepared by Midwest Research Institute for the Stationary Source Compliance Division of the U. S. Environmental Protection Agency. It has been completed in accordance with EPA Contract No. 68-02-4463, Work Assignment 6. It has been reviewed by the Stationary Source Compliance Division of the Office of Air Quality Planning and Standards, U. S. Environmental Protection Agency and approved for publication. Approval does not signify that the contents necessarily reflect the views and policies of the U. S. Environmental Protection Agency. Any mention of product names does not constitute endorsement by the U. S. Environmental Protection Agency.

The safety precautions set forth in this manual and presented at any training or orientation session, seminar, or other presentation using this manual are general in nature. The precise safety precautions required for any given situation depend upon and must be tailored to the specific circumstances. Midwest Research Institute expressly disclaims any liability for any personal injuries, death, property damage, or economic loss arising from any actions taken in reliance upon this manual or any training or orientation session, seminar, or other presentations based upon this manual.

ACKNOWLEDGEMENT

A primary source of information for this manual is the Municipal Waste Incinerator Field Inspection Notebook prepared by Richards Engineering, Durham, North Carolina. Much of this document, especially Chapter 6 "Baseline Inspection Procedures for Hospital Incinerators," has been drawn extensively from the Richard's document.

The authors acknowledge the guidance and contributions provided by the EPA work assignment managers, James Topsale, Region III and Pam Saunders, Stationary Source Compliance Division.

Additionally, the authors acknowledge the contributions of the following individuals who provided useful comments on the initial draft of this document: Christopher A. James, EPA/Region X; Jim Eddinger, EPA/OAQPS; David Painter, EPA/OAQPS; Justine Fush, EPA/OECM; Gary Gross, EPA/Region III; Roger Pfaff, EPA/Region IV; Jay M. Willenberg, State of Washington, Department of Ecology; Wallace E. Sonntag, New York State, Department of Environmental Conservation; Carl York, State of Maryland, Air Management Administration; and Frank Cross, Cross/Tessitore and Associates.

TABLE OF CONTENTS

		Page
CHAPTER 1.0	INTRODUCTION	1-1
	1.1 BACKGROUND	1-1
	1.2 PURPOSE	1-1
	1.3 SCOPE	1-1
	1.4 ORGANIZATION	1-2
	1.5 REFERENCES FOR CHAPTER 1	1-3
CHAPTER 2.0	GENERAL INSPECTION CONSIDERATIONS	2-1
	2.1 LEGAL AUTHORITY OF THE INSPECTOR	2-1
	2.1.1 Scope	2-1
	2.1.2 State Authority	2-1
	2.1.3 Authorized Representatives	2-1
	2.1.4 Offsite Inspections	2-2
	2.2 REGULATIONS UNDER THE CLEAN AIR ACT	2-2
	2.2.1 Existing Regulations	2-2
	2.2.2 Possible Future Regulations	2-6
	2.3 INSPECTOR RESPONSIBILITIES AND LIABILITIES	2-7
	2.3.1 Legal Responsibilities	2-7
	2.3.2 Procedural Responsibilities	2-8
	2.3.3 Safety Responsibilities	2-9
	2.3.4 Professional and Ethical Responsibilities	2-9
	2.3.5 Quality Assurance Responsibilities	2-11
	2.3.6 Potential Liabilities	2-11
	2.4 GENERAL INSPECTION PROCEDURES	2-12
	2.4.1 Preinspection Preparation	2-12
	2.4.2 Preentry Observations	2-15
	2.4.3 Entry	2-16
	2.4.4 Contents and Timing	2-20
	2.5 REFERENCES FOR CHAPTER 2	2-25

TABLE OF CONTENTS (continued)

		Page
CHAPTER 3.0	INSPECTION SAFETY	3-1
	3.1 SCOPE	3-1
	3.2 SAFETY GUIDELINES	3-1
	3.3 EQUIPMENT-SPECIFIC SAFETY CONSIDERATIONS	3-5
	3.3.1 Incinerators	3-5
	3.3.2 Wet Scrubbers	3-6
	3.3.3 Dry Scrubbers	3-7
	3.3.4 Fabric Filters	3-8
CHAPTER 4.0	VISIBLE EMISSION OBSERVATION	4-1
	4.1 EPA REFERENCE METHOD 9	4-1
	4.2 CONTINUOUS EMISSION MONITORING FOR OPACITY	4-2
	4.3 SPECIAL CONSIDERATIONS FOR OPACITY OBSERVATIONS AT HOSPITAL INCINERATORS	4-9
	4.3.1 Tall Stack/Slant Angle	4-9
	4.3.2 Steam (Condensing Water Vapor) Plumes	4-9
	4.3.3 Evaluating Visible Emissions	4-9
	4.3.4 Fugitive Emissions	4-10
	4.4 REFERENCES FOR CHAPTER 4	4-10
CHAPTER 5.0	HOSPITAL INCINERATION SYSTEMS	5-1
	5.1 INTRODUCTION	5-1
	5.2 TYPES OF HOSPITAL INCINERATOR SYSTEMS	5-1
	5.2.1 Principles of Air Supply	5-3
	5.2.2 Hospital Incinerator Descriptions	5-9
	5.3 AIR POLLUTION CONTROL SYSTEMS	5-22
	5.3.1 Wet Scrubbers	5-22
	5.3.2 Dry Scrubbers	5-30
	5.3.3 Fabric Filters	5-39
	5.3.4 Electrostatic Precipitators	5-45
	5.4 REFERENCES FOR CHAPTER 5	5-45

TABLE OF CONTENTS (continued)

Page

CHAPTER 6.0 BASELINE INSPECTION PROCEDURES FOR HOSPITAL INCINERATORS..... 6-1

6.1 BASELINE INSPECTION TECHNIQUE..... 6-1

6.1.1 Basic Principles..... 6-2
6.1.2 Counterflow Technique..... 6-4
6.1.3 Co-current Technique..... 6-4

6.2 LEVELS OF INSPECTION..... 6-7

6.2.1 Level 4 Inspections..... 6-7
6.2.2 Level 3 Inspections..... 6-9
6.2.3 Level 2 Inspections..... 6-9
6.2.4 Level 1 Inspections..... 6-10

6.3 COMMON INSPECTION ACTIVITIES..... 6-10

6.3.1 Prepare a System Flowchart..... 6-11
6.3.2 Identify Potential Safety Problems..... 6-11
6.3.3 Evaluate Locations for Measurement Ports.. 6-12
6.3.4 Evaluate Visible Emissions..... 6-12
6.3.5 Evaluate Double-Pass Transmissometer Physical Condition..... 6-13
6.3.6 Evaluate Double-Pass Transmissometer Data..... 6-13
6.3.7 Sulfur Dioxide, Nitrogen Oxides, and Hydrogen Chloride Monitor Physical Conditions..... 6-14
6.3.8 Sulfur Dioxide, Nitrogen Oxides, and Hydrogen Chloride Emission Data..... 6-14

6.4 CHARACTERIZATION OF WASTE..... 6-15

6.4.1 Waste Characteristics That Affect Incinerator Operation..... 6-20
6.4.2 Handling of Infectious Wastes..... 6-22
6.4.3 Waste Inspection..... 6-23

6.5 EVALUATION OF COMBUSTION EQUIPMENT..... 6-28

6.5.1 Particulate Matter and Particulate Metals..... 6-28
6.5.2 Acid Gases..... 6-29
6.5.3 Organics..... 6-30
6.5.4 Infectious Agents..... 6-30
6.5.5 Inspection of Combustion Equipment..... 6-31

TABLE OF CONTENTS (continued)

		Page
	6.6 INSPECTION OF AIR POLLUTION CONTROLS	6-41
	6.6.1 Inspection of Wet Scrubbers	6-41
	6.6.2 Inspection of Dry Scrubbers	6-51
	6.6.3 Inspection of Fabric Filters	6-58
	6.7 REFERENCES FOR CHAPTER 6	6-66
CHAPTER 7.0	SPECIAL CONSIDERATIONS	7-1
	7.1 INCINERATOR OPERATOR TRAINING AND OPERATOR EXPERIENCE	7-1
	7.2 EMERGENCY OPERATING PLAN	7-2
	7.3 CROSS-MEDIA INSPECTIONS	7-2
	7.3.1 Air Pollution	7-3
	7.3.2 Solid Waste	7-3
	7.3.3 Inspector Multimedia Responsibilities	7-4
	7.4 STARTUP AND SHUTDOWN PROCEDURES FOR HOSPITAL WASTE INCINERATORS AND ASSOCIATED AIR POLLUTION CONTROL DEVICE	7-6
	7.4.1 Batch Feed Starved-Air Incinerator	7-6
	7.4.2 Intermittent-Duty, Starved-Air Incinerators	7-9
	7.4.3 Continuous-Duty, Starved-Air Incinerators	7-10
	7.4.4 Excess-Air Incinerators	7-11
	7.4.5 Wet Scrubbers	7-12
	7.4.7 Fabric Filters	7-15
	7.5 WASTE HEAT BOILERS	7-17
	7.6 CITIZENS COMPLAINT FOLLOWUP	7-18
	7.7 REFERENCES FOR CHAPTER 7	7-18
CHAPTER 8.0	GLOSSARY	8-1

TABLE OF CONTENTS (continued)

		Page
APPENDIX A.	INSPECTION CHECKLIST FOR WASTE CHARACTERIZATION.....	A-1
APPENDIX B.	INSPECTION CHECKLIST FOR INCINERATORS.....	B-1
APPENDIX C.	INSPECTION CHECKLIST FOR POLLUTION CONTROL SYSTEMS....	C-1
APPENDIX D.	METHOD 9 WORK SHEET.....	D-1
APPENDIX E.	SAFETY CHECKLIST.....	E-1
APPENDIX F.	CITIZEN COMPLAINT FORM.....	F-1
APPENDIX G.	EXAMPLE INSPECTION REPORT.....	G-1

LIST OF TABLES

		Page
TABLE 2-1.	GUIDELINE EMISSION LIMITS FOR INCINERATORS BURNING HOSPITAL WASTE	2-5
TABLE 4-1.	SUMMARY OF METHOD 9 REQUIREMENTS	4-3
TABLE 4-2.	PERFORMANCE SPECIFICATIONS FOR OPACITY MONITORS	4-7
TABLE 5-1.	CLASSIFICATION OF HOSPITAL INCINERATORS	5-4
TABLE 5-2.	WET SCRUBBER PERFORMANCE PARAMETERS	5-23
TABLE 6-1.	ULTIMATE ANALYSES OF FOUR PLASTICS	6-19
TABLE 6-2.	INCINERATOR INSTITUTE OF AMERICA SOLID WASTE CLASSIFICATIONS	6-21
TABLE 6-3.	MATRIX OF MEDICAL WASTE INSPECTION ACTIVITIES ASSOCIATED WITH INSPECTION LEVELS 1, 2, 3, AND 4	6-24
TABLE 6-4.	MATRIX OF COMBUSTION EQUIPMENT INSPECTION ACTIVITIES ASSOCIATED WITH INSPECTION LEVELS 1, 2, 3, AND 4	6-32
TABLE 6-5.	MATRIX OF AIR POLLUTION CONTROL DEVICE INSPECTION ACTIVITIES ASSOCIATED WITH INSPECTION LEVELS 1, 2, 3, AND 4	6-43
TABLE 7-1.	LIST OF HAZARDOUS WASTES THAT MAY BE GENERATED AT A MEDICAL FACILITY	7-5

LIST OF FIGURES

		Page
Figure 4-1.	Typical transmissometer installation for measuring opacity	4-5
Figure 5-1.	Schematic of a controlled-air incinerator	5-5
Figure 5-2.	Control of temperature as a function of excess air	5-7
Figure 5-3.	Schematic of a batch/starved-air incinerator	5-10
Figure 5-4.	Operating sequence of a waste charging hopper/ram system	5-12
Figure 5-5.	Intermittent/controlled-air incinerator with vertical primary chamber and horizontal secondary chamber	5-14
Figure 5-6.	Schematic of a continuous operation controlled-air incinerator with mechanical charging and ash removal	5-16
Figure 5-7.	Retort multiple-chamber, excess-air incinerator for pathological wastes	5-17
Figure 5-8.	In-line excess air incinerator	5-19
Figure 5-9.	Drawing for rotary kiln incinerator	5-21
Figure 5-10.	Venturi configuration	5-25
Figure 5-11.	Spray venturi with rectangular throat	5-26
Figure 5-12.	Vertically oriented packed-bed scrubber	5-29
Figure 5-13.	Components of a spray dryer absorber system (semiwet process)	5-32
Figure 5-14.	Components of a dry injection absorption system (dry process)	5-33
Figure 5-15.	Components of a combination spray dryer and dry injection absorption system (semiwet/dry process)	5-34
Figure 5-16.	Schematic of pulse jet baghouse	5-40
Figure 5-17.	Top access pulse jet fabric filter	5-41
Figure 5-18.	Cross sectional sketch of pulse jet fabric filter	5-43

LIST OF FIGURES (continued)

Page

Figure 6-1. Counterflow inspection approach..... 6-5

Figure 6-2. Co-current inspection approach..... 6-6

Figure 6-3. The biological hazard symbol..... 6-16

1.0 INTRODUCTION

1.1 BACKGROUND

Hospitals have long used incineration for the disposal of all or part of the wastes they generate; the practice is expected to grow in the near future. Many States recently have established regulations governing the disposal of infectious wastes; other States are considering such regulations. The trend in these regulations is away from direct landfilling and toward treatment to render wastes innocuous prior to land disposal. The primary treatment method is expected to be incineration.

At the same time that infectious waste disposal considerations are creating pressures for increased incineration of hospital wastes, interest in the regulation of air emissions from these sources is also rising. Recent investigation into emissions from municipal waste incinerators has heightened the awareness of the potential for emissions of fine particulate matter, acid gases, and toxic compounds (e.g., chlorinated dioxins and furans) from hospital incinerators. This has stimulated interest in these sources that once were considered too small to be closely regulated. A number of States have enacted or are considering new regulations for hospital waste incinerators (HWI's).

As new, more stringent regulations affecting HWI's raise control costs, the economic viability of larger commercial units built to serve a number of hospitals increases. Such facilities can take advantage of the economies of scale of incineration and pollution control equipment and likely will be much more able to profitably recover energy profitably than will a small HWI with its characteristic load fluctuations.

1.2 PURPOSE

These trends in the use and regulation of HWI's provide the impetus for this manual. The purpose of this manual is to meet the growing need for specialized information on this source of air pollution.

This manual provides air program inspectors with a concise body of information pertinent to the inspection of hospital waste incinerators.

1.3 SCOPE

This manual is not intended to provide detailed information on general inspection procedures and techniques. These subjects have been

well covered elsewhere.[1,2] These subjects will be touched upon as necessary to present an integrated approach to HWI inspections, but the focus of this manual will be on those subject areas with greatest relevance to HWI's. Special emphasis will be placed on matters unique to HWI's.

Much of the information relative to the components and operating principles of hospital waste incineration systems was taken from "Operation and Maintenance of Medical Waste Incinerators" which is currently under development by the U. S. Environmental Protection Agency. Inspectors should refer to this document for detailed information on the proper operation and maintenance of hospital waste incinerator systems.

1.4 ORGANIZATION

In Chapter 2, general inspection information is presented. Topics include legal authority, regulations under the Clean Air Act, inspector responsibilities and liabilities, and general inspection procedures. Chapter 3 discusses safety during inspections, with emphasis on hazards specific to HWI's and the control devices expected at such facilities. Visible emission observation procedures are presented in Chapter 4.

In Chapter 5, background information on HWI types is presented. Excess-air, starved-air, and rotary kiln units are discussed. Background is also given for the types of control devices currently in use at HWI facilities and those expected to come into use as more stringent regulations are adopted. These include wet and dry scrubbers and fabric filters.

The heart of this manual is presented in Chapter 6. Inspection checklists and detailed inspection procedures are provided for Levels 2, 3, and 4 inspections of HWI's and control devices.

Special considerations are addressed in Chapter 7. These include HWI operator training, emergency operating plans, cross-media inspections, citizen complaint followup, waste heat boilers, and startup and shutdown procedures. Finally, a number of appendices present supplementary materials such as inspection checklists.

1.5 REFERENCES FOR CHAPTER 1

1. U. S. EPA Stationary Source Compliance Division, "Air Compliance Inspection Manual," U. S. Environmental Protection Agency. Publication No. 340/1-85-020. September 1985.

2. Richards, J. R., and Segall, R. R., "Baseline Source Inspection Techniques," U. S. Environmental Protection Agency. Publication No. 340/1-85-022a. June 1985.

2.0 GENERAL INSPECTION CONSIDERATIONS

2.1 LEGAL AUTHORITY OF THE INSPECTOR[1]

Section 114 of the Clean Air Act (CAA) provides the Administrator of EPA or his authorized representative with the authority, upon presentation of his credentials, to enter the premises of facilities subject to regulations under the Act for the purpose of conducting onsite inspections to monitor compliance with these regulations.

2.1.1 Scope

Inspections conducted under Section 114 extend to all things relating to compliance with the requirements of the CAA which are within the premises being inspected. These may include:

1. Records;
2. Files;
3. Processes;
4. Monitoring equipment;
5. Controls;
6. Sampling methods; and
7. Emissions.

2.1.2 State Authority

In accord with the intent of the CAA, much of the compliance monitoring, including onsite inspections, is accomplished at the State level. Section 114 of the Act allows Federal authority to be delegated to the States to carry out that Section. Where a State has been delegated full Section 114 authority from EPA, the same authority EPA has to monitor, sample, inspect or copy records, and any other authority under Section 114 can, in like manner, be exercised by the State. No representative of EPA need accompany the State officials.

2.1.3 Authorized Representatives

The EPA does not always have the staff available to conduct all of the compliance monitoring functions on its own. In order to accomplish these functions, EPA frequently hires private contractors to provide technical support for onsite inspections and sampling, among other things. The EPA maintains that such contractors upon proper designation are "authorized representatives" of the Administrator within the meaning

of Section 114; however, the courts have not unanimously upheld EPA's position. For this reason, EPA has adopted a policy that duly-authorized contractors are used to conduct onsite inspections only in those Circuits where Courts of Appeals' decisions have not been against the use of contractors as authorized representatives.

The EPA's current policy on the use of contractors to conduct onsite inspections is as follows:

1. First, Second, Third, Fourth, Fifth, Seventh, Eighth, Eleventh, and District of Columbia Circuits. Authorized contractors may be designated to provide technical support for inspection of facilities owned by anyone other than Stauffer Chemical Company.

2. Ninth Circuit. Authorized contractors may be designated to provide technical support for any inspections.

3. Sixth and Tenth Circuits. Absent express permission from Headquarters, authorized contractors should not be designated to provide technical support for any inspections.

2.1.4 Offsite Inspections

The EPA also has the authority to conduct unannounced, off-the-premises inspections, such as visible emission observations.

2.2 REGULATIONS UNDER THE CLEAN AIR ACT

2.2.1 Existing Regulations

2.2.1.1 New Source Performance Standards (NSPS).[2] At this time, no NSPS is applicable specifically to HWI's. However, two existing NSPS could apply to very large facilities. The standard for industrial, commercial, and institutional steam generating units (40 CFR Part 60, Subpart Db) applies to facilities with a heat input capacity of 100 million Btu/h or greater that recover heat to generate steam or heat water. This heat input is greater than the capacity of any onsite HWI available at this time but is not out of the question for a regional commercial facility. For this NSPS to be applicable, a facility burning Type 0 waste with a heating value of 8,500 Btu per pound would have to have a capacity of nearly 12,000 pounds per hour (140 tons/d) or more. The standard regulates opacity and emissions of PM, NO_x, and SO_2.

The standard for incinerators (40 CFR Part 60, Subpart E) applies to incinerators with a capacity of 50 tons/d or greater that burn more than 50 percent "municipal type waste." Under the definitions of the standard, HWI's would seem to qualify. Even so, only the largest onsite units or regional facilities would qualify. Currently, this standard regulates PM emissions; the standard is being revised.

2.2.1.2 National Emission Standards for Hazardous Air Pollutants (NESHAP's). Standards for emissions of radionuclides to the atmosphere have been promulgated for DOE facilities (40 CFR Part 61, Subpart H) and for other facilities (40 CFR Part 61, Subpart I). Some medical research facilities are licensed to incinerate their radioactive wastes. At these facilities, these wastes likely will be incinerated along with the facility's infectious wastes, and the incinerator will be subject to the applicable NESHAP. It is unlikely that most hospital incinerators will be licensed to incinerate radioactive wastes, so incinerators at these facilities are unlikely to be subject to the NESHAP's.

2.2.1.3 State Implementation Plans (SIP's). Under the CAA, a State wishing to administer its own air quality control programs must receive approval from EPA of its SIP. To be approved, the SIP is required to include a number of specific programs, including prevention of significant deterioration (PSD) in attainment areas, new source review (NSR) in nonattainment areas, and air quality management plans and emission limitations to maintain (or progress towards) attainment of national ambient standards.

Incinerators located at hospitals are too small for PSD and NSR programs to apply. These programs, particularly NSR, could apply to very large regional commercial HWI's.

Some States are now regulating emissions from HWI's specifically, but most have no specific requirements for these sources. Where emission limits have been adopted, they are generally quite stringent. For instance, Pennsylvania has recently (January 1988) adopted standards that limit emissions of particulate matter from the largest HWI's (capacity >2,000 pounds per hour) to 0.015 gr/dscf, corrected to 7 percent O_2. This limitation is based on the best demonstrated technology (BDT) determined for municipal waste incinerators, the use of a dry scrubber followed by a

fabric filter or ESP. Emissions of CO, HCl, and SO_2 are also regulated, as is the opacity of the visible emissions. Several States have imposed regulations on new HWI's similar to those governing hazardous waste incinerators under the Resource Conservation and Recovery Act (RCRA): 0.08 gr/dscf (corrected to 12 percent CO_2) for particulate matter, 100 ppm for CO, and 99 percent control or 4 pounds per hour for HCl, whichever is higher.[2] (These standards are essentially the same as the Pennsylvania regulations for the smallest HWI's, those with capacities $\leq$500 pounds per hour.) Although current interest in infectious waste is creating a trend towards specific regulations, in many States the only existing regulations that apply to HWI's are general prohibitions on excessive opacity and odor. Table 2-1 presents emission limit guidelines currently promulgated for several States that represent the trend towards specific HWI emission limits.

2.2.1.4 State Air Toxics Programs. Most States have relatively new air toxics programs to regulate toxic emissions based on the ambient concentrations that result from operation of the source. For instance, the Pennsylvania regulations require ambient impact analyses for a number of inorganic and organic substances using dispersion modeling.

2.2.1.5 Construction and Operating Permits. Because there currently are no NSPS regulations governing HWI's, many states are promulgating regulations of their own that impose both emission limitations and minimum operating conditions on the incinerator and air pollution control devices. These types of regulations are included as part of the HWI's construction and operating permit.

Most states require that emission sources apply for a combined construction and operating permit; other states require both a construction permit and an operating permit. The inspector should become familiar with the limitations and conditions included in the facility's permit prior to inspecting the HWI. Table 2-1 presents examples of the types of emission limitations that have been promulgated in some states. Operating condition limits may include minimum primary and secondary chamber temperatures, minimum gas retention time in the secondary chamber, and minimum pressure drop across the venturi section.

TABLE 2-1. GUIDELINE EMISSION LIMITS FOR INCINERATORS BURNING HOSPITAL WASTE[2]

State/Facility	Pollutant				
	Particulate matter	Opacity	HCl	CO	SO_2
New York	Existing facilities: 0.03 gr/dscf (at 7 percent O_2) New facilities: 0.015 gr/dscf (at 7 percent O_2)	6-minute average <10 percent;	90 percent reduction or <50 ppm at 7 percent O_2, unless <4 lb/h uncontrolled	150 ppm (at 7 percent O_2)	--
Pennsylvania (facility with capacity ≤500 lb/h)	0.08 gr/dscf (at 7 percent O_2)	Hourly average <10 percent; maximum continuous 3-minute average <30 percent	<4 lb/h or shall be reduced by 90 percent by weight	100 ppmv hourly average (at 7 percent O_2)	--
Pennsylvania (facility with >500 lb/h to ≤2,000 lb/h)	0.03 gr/dscf (at 7 percent O_2)	Hourly average <10 percent; maximum continuous 3-minute average <30 percent	30 ppmv hourly average (at 7 percent O_2) or shall be reduced by 90 percent by weight	100 ppmv hourly average (at 7 percent O_2)	30 ppmv hourly average (at 7 percent O_2 or shall be reduced by 70 percent by weight
Pennsylvania (facility with capacity >2,000 lb/h)	0.015 gr/dscf (at 7 percent O_2)	Hourly average <10 percent; maximum continuous 3-minute average <30 percent	30 ppmv hourly average (at 7 percent O_2) or shall be reduced by 90 percent by weight	100 ppmv hourly average (at 7 percent O_2)	30 ppmv hourly average (at 7 percent O_2) or shall be reduced by 70 percent by weight
New Jersey	0.02 gr/dscf (at 12 percent CO_2)	--	--	--	--
Connecticut	0.02 gr/dscf (at 12 percent CO_2)	--	--	--	--
Illinois (facility with capacity >6,000 lb/h)	0.05 gr/dscf (at 12 percent CO_2)	30 percent	--	--	--
Illinois (facility with capacity >2,000 lb/h, <6,000 lb/h)	0.08 gr/dscf (at 12 percent CO_2)	30 percent	--	500 ppm at 50 percent excess air	--
Illinois (facility with capacity <2,000 lb/h)	0.1-0.20 gr/dscf (at 12 percent CO_2)	30 percent	--	--	--
Washington (facility with capacity >1,000 lb/h)	0.03 gr/dscf	10 percent (CEM required)	50 ppm	CEM required	50 ppm (CEM required)

2.2.2 Possible Future Regulations

2.2.2.1 NSPS. The EPA is considering an NSPS for smaller boilers, perhaps with a cutoff as low as 10 million Btu/h heat input.[2] Such a regulation has potential applicability to HWI's with capacities as low as 1,200 pounds per hour (assuming Type 0 wastes with a heating value of 8,500 Btu/lb) that produce steam or hot water.

2.2.2.2 SIP's. With the establishment of an ambient standard for respirable particulate matter (PM_{10}), SIP revisions are required for a number of areas. As a source of PM_{10}, HWI's may be addressed in these SIP revisions with new emission limits. This may also result in new emphasis on HWI's under NSR provisions.

2.2.2.3 The Medical Waste Tracking Act of 1988. The Medical Waste Tracking Act of 1988 was signed into law by President Reagan on November 1, 1988. House Rule (HR) 3515 created a pilot program to track infectious medical wastes in 10 states including New York, New Jersey, Connecticut, and the States contiguous to the Great Lakes (Wisconsin, Illinois, Michigan, Indiana, Ohio, Pennsylvania, and Minnesota). Additionally, HR 3515 listed the following 10 categories of waste that must be included in the tracking system:

- Cultures and stocks of infectious agents and associated biologicals, such as cultures from laboratories;
- Pathological wastes, such as tissues, organs, and body parts;
- Human blood wastes and other blood products, including serum, plasma, and other blood components;
- Sharps that have been used in patient care, medical research, or industrial laboratories;
- Contaminated animal carcasses, body parts, and animal bedding exposed to infectious agents during research;
- Surgery or autopsy wastes that came in contact with infectious agents;
- Laboratory wastes from medical, pathological, pharmaceutical, or other research, commercial, or industrial laboratories that were in contact with infectious agents;
- Dialysis wastes that were in contact with the blood of patients undergoing hemodialysis;

- Discarded medical equipment and parts that were in contact with infectious wastes; and
- Biological wastes and discarded materials contaminated with blood, excretion, or secretions from human beings or animals that are isolated to protect others from communicable diseases.

Additional wastes may be added by the EPA administrator. The 10 wastes must be segregated at the point of generation and must be placed in appropriately labeled containers that will protect waste handlers and the public from exposure. Additionally, a waste manifest system will be implemented for generators who have their waste disposed offsite. For waste generators who treat their waste through onsite incineration and who do not track their waste as outlined above, a recordkeeping and reporting requirement will be implemented that requires the generator to report the volume and types of medical waste incinerated on site for 6 months after the effective date of the tracking system. The EPA expects to publish proposed regulations in early February 1989. Depending on the success of the pilot program, the medical waste tracking system may be implemented nationwide.

2.3 INSPECTOR RESPONSIBILITIES AND LIABILITIES[1]

The primary role of the air compliance inspector is to gather information needed for the determination of compliance with applicable regulations and for other enforcement-related activities, such as case development. Closely coupled with the accomplishment of these functions are certain responsibilities of the air compliance inspector, which include: (1) knowing and abiding by the legal requirements of the inspection, (2) using proper procedures for effective inspection and evidence collection, (3) practicing accepted safety procedures, (4) maintaining certain quality assurance standards, and (5) observing the professional and ethical responsibilities of the government employee. Additional important considerations for the inspector are any potential liabilities of his position.

2.3.1 Legal Responsibilities

It is essential that all inspection activities be conducted within the legal framework established by the CAA. In particular, this includes:

1. Proper handling of confidential business information;

2. Presentation of proper credentials and plant entry at reasonable times;

3. Protection of the company's and its personnel's legal rights under the U.S. Constitution;

4. Knowledge of all applicable statutes, regulations, and permit conditions; and

5. Use of notice(s) and receipts, if appropriate.

2.3.2 Procedural Responsibilities

The inspector must be familiar with and adhere to, when possible, all general inspection procedures and evidence gathering techniques. This will ensure accurate inspections and avoid the possibility of endangering a legal proceeding on procedural grounds.

2.3.2.1 Inspection Procedures. Inspectors should observe standard procedures for conducting each portion of the inspection, when possible. All deviations should be clearly documented. The accepted general inspection procedures are covered in detail in Section 2.4 of this chapter.

2.3.2.2 Evidence Collection. Inspectors must be familiar with general evidence gathering techniques. Because the government's case in an enforcement action depends on the evidence gathered by the inspector, it is imperative that the inspector keep detailed records of each inspection. These records will serve as an aid in preparing the inspection report, in determining the appropriate enforcement response, and in giving testimony in an enforcement case. Documentation of evidence is covered in Chapter 2.0 of this manual. Several responsibilities involved in evidence collection and presentation should be addressed here. Specifically, inspectors must:

1. Know how to substantiate facts with items of evidence, including samples, photographs, document copies, statements from persons, and personal observations.

2. Know how to detect lack of good faith during interviews with company personnel.

3. Be familiar with all applicable regulations and what type of information is required to determine compliance with each.

4. Be able to evaluate what documentation is necessary (routine inspection).

5. Collect evidence in a manner that will be incontestable in legal proceedings.

6. Be able to write clear, informative inspection reports.

7. Know how to testify in court and at administrative hearings.

2.3.3 Safety Responsibilities

The inspection of air pollution control equipment and related work in other areas of industrial facilities generally involves potential exposure to numerous hazards. The inspector must, at all times, avoid putting him/herself or any plant personnel at unnecessary risk. To accomplish this, it is the inspector's responsibility to:

1. Know and observe all plant safety requirements, warning signals, and emergency procedures.

2. Know and observe all agency safety requirements, procedures, and policies.

3. Remain current in safety practices and procedures by regular participation in agency safety training.

4. Use any safety equipment required by the facility being inspected in addition to that required by the agency.

5. Use safety equipment in accordance with agency guidance and label instructions.

6. Maintain safety equipment in good condition and proper working order.

7. Dress appropriately for each inspection activity, including protective clothing, if appropriate.

Chapter 3.0 of this manual and listed references address inspection safety procedures and other safety-related questions in more detail.

2.3.4 Professional and Ethical Responsibilities

As professionals and employees of Federal, State, or local authorities, inspectors are expected to perform their duties with integrity and professionalism. Procedures and requirements ensuring ethical actions have been worked out through many years of governmental inspection activities. These procedures and standards of conduct have evolved for the protection of the individual and the Agency, as well as

industry. The inspector is constantly in a position to set an example for private industry, to encourage concern for health and safety in the environment, and to promote compliance with the laws that protect the environment and the health and safety of employees.

Specifically, the inspector should always consider and observe the following list of responsibilities.

2.3.4.1 U.S. Constitution. All investigations are to be conducted with the framework of the U.S. Constitution and with due regard for individual rights regardless of race, sex, creed, or national origin.

2.3.4.2 Employee Conduct. Inspectors are to conduct themselves at all times in accordance with the regulations prescribing EPA Employee Responsibilities and Conduct, codified in 40 CFR Part 3.

In the absence of specific guidelines regarding conduct during an inspection, it is recommended that State and local agency inspectors become familiar with these regulations and conduct themselves in a similar manner.

2.3.4.3 Objectivity. The facts of an investigation are to be developed and reported completely, accurately, and objectively. In the course of an investigation, any act or failure to act motivated by reason of private gain is illegal. Actions which could be construed as such should be scrupulously avoided.

2.3.4.4 Knowledge. A continuing effort to improve professional knowled and technical skill in the investigation field should be made. The inspector should keep abreast of changes in the field of air pollution, including current regulations, EPA and other agency policies, control technology, methodology, and safety considerations.

2.3.4.5 Professional Attitude. The inspector is a representative of EP or State or local government and is often the initial or only contact between the appropriate agency and industry. In dealing with facility representatives and employees, inspectors must be dignified, tactful, courteous, and diplomatic. They should be especially careful not to infringe on union/company agreements. A firm but responsive attitude will help to establish an atmosphere of cooperation and should foster good working relations. The inspector should always strive to obtain the

respect of, inspire confidence in, and maintain good will with industry and the public.

2.3.4.6 Attire. Inspectors should dress appropriately, including wearing protective clothing or equipment, for the activity in which they are engaged.

2.3.4.7 Industry, Public, and Consumer Relations. All information acquired in the course of an inspector's duties is for official use only. Inspectors should not speak of any product, manufacturer, or person in a derogatory manner.

2.3.4.8 Gifts, Favors, Luncheons. Inspectors should not accept favors or benefits under circumstances that might be construed as influencing the performance of governmental duties. The EPA regulations provide an exemption whereby an inspector could accept food and refreshment of nominal value on infrequent occasions in the ordinary course of a luncheon or dinner meeting or other meeting, or during an inspection tour. Inspectors should use this exemption only when absolutely necessary.

2.3.4.9 Requests for Information. Although EPA has a general "open-door" policy on releasing information to the public, this policy does not extend to information related to the suspicion of a violation, evidence of possible misconduct, or confidential business information.

2.3.5 Quality Assurance Responsibilities

The inspector assumes primary responsibility for ensuring the quality of data generated as a result of the inspection. The inspector should thus adhere to quality assurance procedures appropriate to the type of data being generated. In general, quality assurance procedures are developed concerning the following elements:

1. Valid data collection;
2. Approved, standard methods;
3. Control of service, equipment, supplies;
4. Quality analytical techniques; and
5. Standard data handling and reporting.

2.3.6 Potential Liabilities

In addition to their responsibilities, inspectors should also be aware of potential personal liabilities. Some examples of the most common liabilities are listed below. The inspector should consult his/her

supervisor or agency legal staff for exact legal determinations on personal liability.

2.3.6.1 Confidential Business Information. Under Section 1905 of Title 18 of the United States Code, Federal employees can be fined, imprisoned, or both for disclosure of confidential business information.

2.3.6.2 Waivers/Visitor Releases. Some companies waivers or visitor releases, if signed, purport to make the person signing liable for certain acts he or she might commit on plant property. These must never be signed by the inspector.

2.3.6.3 Authority. In some cases, the inspector could be held liable f actions committed beyond the scope of his/her authority; the inspector must always know exactly what his/her authority is.

2.4 GENERAL INSPECTION PROCEDURES

This section briefly describes some of the legal and administrative procedures common to most air compliance inspections. More complete discussion of the legal and administrative procedures common to most inspections can be found in Chapter 3 of the Air Compliance Inspection Manual, EPA-340/1-85-020, September 1985. These procedures will help to ensure that technical inspections are complete, current, and legally defensible and that the data gathered can be used effectively in later compliance monitoring and determination.

These general inspection procedures can be categorized by the order in which they occur in the inspection process: (1) preinspection preparation, (2) preentry observations, (3) entry, and (4) contents and timing. These categories are discussed below.

2.4.1 Preinspection Preparation

Preinspection preparation is always necessary to ensure effective use of the inspector's time and the facility personnel's time and to ensure that the inspection is focused properly on collecting relevant data and information. Preinspection preparation involves:

1. Review of facility background;
2. Development of an inspection plan;
3. Notifications; and
4. Equipment preparation.

2.4.1.1 Review of Facility Background. A review of the available background information on the infectious waste incinerator to be inspected is essential to the overall success of the inspection. The review should enable the inspector to become familiar with the incinerator's design, operating procedures, and emission characteristics; conduct the inspection in a timely manner; minimize inconvenience to the facility by not requesting unnecessary data such as that previously provided to EPA or another agency; conduct an efficient but thorough inspection; clarify technical and legal issues before entry; and prepare a useful inspection report. The types of information that should be reviewed are listed below.

1. Basic facility information.
   a. Names, titles, and phone numbers of facility representatives;
   b. Maps showing facility location and geographic relationship to residences, etc., potentially impacted by emissions;
   c. Incinerator type and capacity;
   d. Types of wastes incinerated;
   e. Flowsheets identifying control devices and monitors; and
   f. Safety equipment requirements.
2. Pollution control equipment and other relevant equipment data.
   a. Description and design data for control devices;
   b. Baseline performance data for control equipment;
   c. Continuous emission monitoring system(s) data;
   d. Previous inspection checklists (and reports); and
   e. Information on maintenance program, if available.
3. Regulations, requirements, and limitations.
   a. Most recent permits for facility sources;
   b. Applicable Federal, State, and local regulations and requirements;
   c. Special exemptions and waivers, if any; and
   d. Acceptable operating conditions.
4. Facility compliance and enforcement history.
   a. Previous inspection reports;
   b. Complaint history including reports, followups, findings, remedial action;

c. Past conditions of noncompliance;

d. Previous enforcement actions;

e. Pending enforcement actions, compliance schedules, and/or variances; and

f. Self-monitoring data and reports.

2.4.1.2 Background Information Sources. The recommended sources for obtaining the background information outlined in Section 2.4.1.1 include:

1. Inspector's "working" file. The inspector's own concise file for a facility containing basic information on the incinerator, flowsheets, baseline performance data for control equipment and the incinerator, chronology of enforcement-related actions, recent permits, and safety equipment requirements.

2. Regional office files and data bases. These files should include much of the information needed including inspection reports, permits and permit applications, compliance and enforcement history, exemption or waiver information, and some self-monitoring data.

3. State/local files and contacts. These should be used to supplement and update the information available in the EPA Regional office files.

4. Laws and regulations. The CAA and related regulations establish emission standards, controls, procedures, and other requirements applicable to a facility. State and local laws and regulations also should be considered.

5. Technical reports, documents, and guidelines. These can often be valuable in providing information and/or guidance concerning incineration, control techniques, performance advantages and limitations of particular types of control equipment, and specific inspection procedures.

2.4.1.3 Development of An Inspection Plan. Based on the review of the facility background information and the intended purpose of the inspection, the inspector should develop an inspection plan that should address the following items:

1. Inspection objectives. Identify the precise purpose of the inspection in terms of what it will accomplish.

2. Tasks. Identify the specific tasks that will accomplish the inspection objectives including the exact information that must be collected.

3. Procedures. Specify the procedures to be used in completing the tasks, especially special or unfamiliar procedures.

4. Resources. List the equipment and identify the personnel that will be required.

5. Schedule. Present an estimate of the time required to conduct the inspection; suggest a feasible date for the inspection (when the incinerator will be operating at representative conditions).

2.4.1.4 Notification of the Facility. The policies of EPA Regional offices vary concerning giving a facility advance notification of an inspection. In a recent EPA policy memo entitled "Final Guidance on Use of Unannounced Inspections," however, the Stationary Source Compliance Division recommends that all Regional inspection programs incorporate unannounced inspections as part of their overall inspection approach.[1] The advantages of unannounced inspections are: (1) the source can be observed under normal operating conditions because the source does not have time to prepare for the inspection; (2) visible emissions and O&M-type problems and violations can be detected; (3) the source's level of attention to its compliance status is increased; and (4) the seriousness of the Agency's attitude toward surveillance is emphasized.

The potential negative aspects of performing unannounced inspections are: (1) the source may not be operating or key plant personnel may not be available; and (2) there could be an adverse impact on EPA/State or EPA/source relations. However, it has been demonstrated by the Regional offices that already use unannounced inspections that, in the majority of cases, these drawbacks can be overcome.

2.4.2 Preentry Observations

Two types of observations conducted prior to facility entry have been shown to be valuable in the determination of facility compliance: observations of the facility surroundings and visible emission observations.

2.4.2.1 Facility Surroundings Observations. Observations of areas surrounding the facility prior to entry may reveal problems related to operational practices and pollutant emissions. These observations can include:

1. Odors downwind of the facility;
2. Deposits on cars parked nearby;
3. Other signs of "soot" downwind of the facility; and
4. Conditions around the waste storage area.

If odors are observed, weather conditions, including wind direction, should be noted for inclusion in the inspection report.

2.4.2.2 Visible Emissions Observations. In addition to observing the facility surroundings prior to entry, the inspector may also perform visible emission observations at that time. The incinerator/control device stack outlet may not be visible from a location outside the plant property lines, but those that are may be conveniently read before entry. In cases where the incinerator has an emergency bypass stack, the observer should note whether the bypass stack was "activated." Visible emission observation procedures are discussed further in Chapter 4.

It is appropriate for the inspector to inform facility officials if excess visible emissions are observed. At the same time, the inspector should identify the cause of the excess emissions to enable facility personnel to promptly evaluate, respond to, and correct the problem. There may be State statutes that require notifications; the inspector should be aware of these before visiting the plant.

2.4.3 Entry

This section describes the accepted procedures under the CAA for entry to a facility to conduct an onsite inspection. Detailed procedures for obtaining an inspection warrant in the case of refusal of entry are not presented because refusal is not prevalent and this subject is covered in detail in other publications. However, should entry be refused, the inspector should consult the EPA Regional Counsel's office for assistance.

2.4.3.1 Authority. The CAA authorizes plant entry for the purposes of inspection. Specifically, Section 114 of the Act states:[1]

> . . . the Administrator or his authorized representative, upon presentation of his credentials shall have a right of entry

to, upon or through any premises of such person or in which any records required to be maintained . . . are located, and may at reasonable times have access to and copy any records, inspect any monitoring equipment or method . . . and sample any emissions which such person is required to sample . . . ."

2.4.3.2 Arrival. The inspector must arrive at the facility (hospital) during normal working hours. Entry through the main lobby is recommended unless the inspector has been previously instructed otherwise. As soon as the inspector arrives on the premises he should locate a responsible hospital official usually the hospital administrator, environmental manager, or chief engineer. In the case of an announced inspection, this person would most probably be the official to whom notification was made. The inspector should note the name and title of this plant representative.

2.4.3.3 Credentials. Upon meeting the appropriate official, the inspector should introduce himself or herself as an EPA inspector, present the official with the proper EPA credentials, and state the reason for requesting entry. The credentials provide the official with the assurance that the inspector is a lawful representative of the Agency. Each office of the EPA issues its own credentials; most include the inspector's photograph, signature, physical description, (age, height, weight, color of hair and eyes), and the authority for the inspection. Credentials must be presented whether or not identification is requested.[1] After facility officials have examined the credentials, they may telephone the appropriate EPA office for verification of the inspector's identification. Credentials should never leave the sight of the inspector.

2.4.3.4 Consent. Consent to inspect the premises must be given by the owner, operator, or his representatives at the time of the inspection. As long as the inspector is allowed to enter, entry is considered voluntary and consensual, unless the inspector is expressly told to leave the premises. Express consent is not necessary; absence of an express denial constitutes consent.[1]

2.4.3.5 Inspection Documentation. The air compliance inspection is generally conducted to achieve one or more of the following three major objectives:

1. To provide data and other information for making a compliance determination;

2. To provide evidentiary support for some type of enforcement action; and

3. To gather data required for other Agency functions.

Taking physical samples, reviewing records, and documenting facility operations are the methods used by the inspector to develop the documentary support required to accomplish these objectives. The documentation from the inspection establishes the actual conditions existing at the time of the inspection so that the evidence of these conditions may be objectively examined at a later time in the course of an enforcement proceeding or other compliance-related activity.

Documentation is a general term referring to all print and mechanical media produced, copied, or taken by an inspector to provide evidence of facility status. Types of documentation include the field notebook, field notes and checklists, visible emission observation forms, drawings, flowsheets, maps, lab analyses of samples, chain-of-custody records, statements, copies of records, printed matter, and photographs. Any documentation gathered or produced in the course of the inspection process may eventually become part of an enforcement proceeding. It is the inspector's responsibility to recognize this possibility and ensure that all documentation can pass later legal scrutiny.

2.4.3.5.1 Inspector's field notebook and field notes. The core of all documentation relating to an inspection is the inspector's field notebook or field notes, which provide accurate and inclusive documentation of all field activities. Even if certain data or other documentation is not actually included in the notebook or notes, reference should be made in the notebook or notes to the additional data or documentation such that it is completely identified and it is clear how it fits into the inspection scheme.

The field notebook and/or notes form the basis for both the inspection report and the evidence package and should contain only facts and pertinent observations. Language should be objective, factual, and free of personal feelings or terminology that might prove inappropriate.

Because the inspector may eventually be called upon to testify in an enforcement proceeding, or field data gathered during the inspection may be entered into evidence, it is imperative that the inspector keep detailed records of inspections, investigations, samples collected, and related inspection functions. The types of information that should be entered into the field notebook or notes include:

1. Observations. All conditions, practices, and other observations relevant to the inspection objectives or that will contribute to valid evidence should be recorded.

2. Procedures. Inspectors should list or reference all procedures followed during the inspection such as those of entry, sampling, records inspection, and document preparation. Such information could help avoid damage to case proceedings on procedural grounds.

3. Unusual conditions and problems. Unusual conditions and problems should be recorded and described in detail.

4. Documents and photographs. All documents taken or prepared by the inspector should be noted and related to specific inspection activities. (For example, photographs taken at a sampling site should be listed, described, and related to the specific sample number.)

5. General information. Names and titles of facility personnel and the activities they perform should be listed along with other general information. Pertinent statements made by these people should be recorded. Information about a facility's recordkeeping procedures may be useful in later inspections.

The field notebook is a part of the Agency's files and is not to be considered the inspector's personal record although copies may be made for the inspector's "working file." Notebooks are usually held indefinitely pending disposition instructions.

2.4.3.5.2 The visible emission observation form. Since visible emission (VE) observations are such a frequently used enforcement tool, a separate form has been developed for recording data from the VE observation (see Appendix D). This form has been designed to include all the supporting documentation necessary, in most cases, for VE observation data to be accepted as evidence of a violation. Thus, it is recommended that the inspector utilize this form for recording opacity observations; an

appropriate reference should be made to the form in the field notebook or notes.

2.4.4 Contents and Timing

During the inspection, the inspector collects and substantiates inspection data that may later be used as evidence in an enforcement proceeding. Upon returning to the office, the inspector is responsible for ensuring that these data are organized and arranged so that other Agency personnel may make maximum use of them. Thus, the file update and inspection report preparation are an important part of the inspection process. These should both be done as soon as possible after the inspection to ensure that all events of the inspection are still fresh in the inspector's memory. The inspector must be able to confirm during a later enforcement proceeding that the information contained in the inspection report is true.

2.4.4.1 File Update. The U. S. EPA and its Regional offices utilize several types of "files" for facility information storage, including computer data bases (the Compliance Data System [CDS] and the National Emissions Data System [NEDS]) and hard copy storage (the Agency source files). The inspector should review the relevant CDS files for the inspected facility to determine if any of the data gathered during the inspection can be used to fill gaps in the files or to update file entries. The CDS data form the basis for virtually all Agency reporting on compliance status, and, therefore, a current data base is absolutely essential to Agency programs for use in making air management planning and budgetary decisions. The NEDS files and any State files equivalent to CDS and NEDS also should be reviewed and updated with information gathered during the inspection.

The Agency files, particularly those at the Regional offices, usually contain the hard copies of all information, correspondence, reports, etc., relevant to a particular facility. Examples of such items are listed below.

1. General facility information;
2. Correspondence to facility;
3. Correspondence from facility;
4. Permit applications;

5. Permits;
6. Facility layout;
7. Flowcharts;
8. Raw data from inspections;
9. Inspection reports;
10. Source test reports;
11. Excess emission reports;
12. Case development workups; and
13. Agency notes, etc., on compliance actions.

The inspector's data should be used to update the general facility information including plant contact, correct address, changes in production rates, new flowcharts, layouts, etc.; of course, the inspector's raw data and inspection report will be added to the file.

At this time, the inspector's "working" file on the facility (see description in Section 2.4.1.2.) should also be updated. This task should not require much effort because the "working" file is a summary file for the inspector's use; and updating the "working" file will enable the inspector to retrieve information on a particular facility quickly in the future.

2.4.4.2 Report Content and Preparation. The inspector's inspection report serves two very important purposes in Agency operations: (1) it provides other Agency personnel with easy access to the inspection information, which is organized into a comprehensive, usable document; and (2) it constitutes a major part of the evidence package on the inspection and will be available for subsequent enforcement proceedings and/or other types of compliance-related followup activities. To serve these purposes, the information contained in the inspection report must be:

1. Accurate. All information must be factual and based on sound inspection practices. Observations should be the verifiable result of firsthand knowledge. Compliance and enforcement personnel must be able to depend on the accuracy of all information.

2. Relevant. Information in an inspection report should be pertinent to the objectives of inspection. Irrelevant facts and data will clutter a report and may reduce its clarity and usefulness.

3. Comprehensive. Suspected violation(s) should be substantiated by as much factual, relevant information as is feasible to gather. The more comprehensive the evidence is, the better and easier the outcome of any enforcement action will be.

4. Coordinated. All information pertinent to the subject should be organized into a complete package. Documentary support (e.g., photographs, statements, sample documentation, etc.) accompanying the report should be clearly referenced so that anyone reading the report will get a complete, clear overview of the situation.

5. Objective. Information should be objective and factual; the report should not speculate on the ultimate result of any factual findings.

6. Clear. The information in the report should be presented in a clear, well-organized manner.

7. Neat and legible. Allow time to prepare a neat, legible report.

2.4.4.2.1 Elements of the inspection report. Although specific information contained in the inspection report will vary depending upon the inspection objectives, most reports will contain the same basic elements:

1. Cover page;
2. Narrative report; and
3. Documentary support.

Cover page. The cover page provides easily accessible basic facility information. It should include:

1. Facility name and address;
2. Facility identification number;
3. Facility contact and/or representative (including phone number);
4. Type of inspection;
5. Date of inspection; and
6. Inspector's name.

Narrative report. The narrative portion of an inspection report should be a concise, factual summary of observations and activities. The narrative should be logically organized, legible, and supported by specific references to accompanying documentary support.

Documentary support. The documentary support is all evidence referred to in the inspection report. It will include:

1. Inspector's field notes, forms, checklists;
2. Drawings, charts, etc.;
3. Photographs;
4. Analysis results for samples collected;
5. Statements taken; and
6. Visible emission observation forms.

2.4.4.2.2 Inspection report preparation. The general work plan presented below will simplify preparation of the inspection report and will help ensure that information is organized and in a useable form. The basic steps in writing the narrative report include:

Reviewing the information. The first step in preparing the narrative is to collect all information gathered during the inspection. The inspector's field notebook should be reviewed in detail. All evidence should be reviewed for relevance and completeness. Gaps may need to be filled by a phone call or, in unusual circumstances, by a followup visit to the facility.

Organizing the material. The information may be organized in any one of several ways depending on individual preference but, whatever organization is selected, the material should be presented in a logical, comprehensive manner. The narrative should be organized so that the information will be easily understood by the reader.

Referencing accompanying material. All documentary support accompanying a narrative report should be clearly referenced so that the reader will be able to locate these documents easily. All documentary support should be checked for clarity prior to writing the report.

Writing the narrative report. Once the material collected by the inspector has been reviewed, organized, and referenced, the narrative can be written. The purpose of the narrative is to record factually the procedures used in, and findings resulting from, the evidence-gathering process. The inspector need only refer to routine procedures and practices used during the inspection but should describe in detail facts relating to potential violations and discrepancies.

If the inspector follows the steps presented, the report should develop logically from the organizational framework of the inspection. In writing the narrative, the inspector should keep the following in mind:

1. Keep sentences short, simple, and direct;
2. Use an active, rather than passive style: (e.g., "He said that . . ." rather than "It was said that . . .");
3. Keep paragraphs brief and to the point;
4. Avoid repetition; and
5. Proofread the narrative carefully.

2.4.4.2.3 Outline of narrative report. A basic format which can be adapted for most narrative reports is outlined below.

1. General inspection information.
   a. Inspection objectives;
   b. Facility selection scheme; and
   c. Inspection facts (date, time, location, plant official, etc.).
2. Summary of findings.
   a. Factual compliance findings (include problem areas);
   b. Compliance status with applicable regulations;
   c. Administrative problems (as with entry, withdrawal of consent, etc.); and
   d. Recommendation for future action (if appropriate).
3. Facility information.
   a. Incinerator type and size;
   b. Source/type of infectious waste;
   c. Operating schedule
   d. Control equipment;
   e. Applicable regulations; and
   f. Enforcement history.
4. Inspection procedures and detail of findings.
   a. Reference to standard inspection procedures used;
   b. Description of nonroutine inspection procedures used;
   c. Reference to attached inspection data;
   d. Reference to any statements taken;
   e. Reference to photographs, if relevant;
   f. Reference to any drawings, charts, etc., made;

g. Reference to visible emission observation forms; and

h. List of records reviewed and inadequacies found.

5. Sampling.

a. Reference to methods used;

b. Reference to analytical results attached; and

c. Chain of custody information.

6. Attachments--list of all documentary support attached.

2.4.4.2.4 Confidential business information. Data or information for which the source requests treatment as confidential business information must be placed in the Agency's confidential files in accordance with 40 CFR Part 2 and cannot be included in the report. The report should, however, refer to the fact that a particular type of information has been placed in the confidential files. Alternatively, the report may include the confidential information; however, the entire inspection report must then be treated as a confidential document (see Section 3.8 in Reference 1 for a more complete discussion).

2.5 REFERENCES FOR CHAPTER 2

1. U. S. EPA Stationary Source Compliance Division, "Air Compliance Inspection Manual," U. S. Environmental Protection Agency. Publication No. 340/1-85-020. September 1985.

2. Hospital Waste Combustion Study Data Gathering Phase. Final Report. U. S. Environmental Protection Agency, Office of Air Quality Planning and Standards, Research Triangle Park, N.C. EPA-450/3-88-017. December 1988.

3.0 INSPECTION SAFETY

3.1 SCOPE

It is not the purpose of this chapter to present an exhaustive discussion of potential health and safety hazards, EPA safety policies, or general safety procedures. While these subjects are important to every inspector, they have been well covered in the Air Compliance Inspection Manual (EPA-340/1-85-020). Inspection personnel are encouraged to consult this manual and become familiar with these subjects.

The information presented in this chapter is divided into two sections. The first consists of general inspection guidelines applicable to hospital waste incinerator (HWI) facilities. These are presented briefly in a list. The second section is subdivided by the type of equipment to be inspected and gives safety considerations specific to each.

Although the information presented in this chapter is tailored to the inspection of HWI facilities, no manual can encompass every health or safety hazard that might be encountered at a given facility. Inspectors must take the responsibility for recognizing site-specific hazards and taking appropriate action to minimize the danger. Nothing should be done that may endanger the inspector or plant personnel.

3.2 SAFETY GUIDELINES

1. Exercise extreme caution in the vicinity of infectious wastes. Never handle infectious wastes. Treat all wastes as infectious wastes, even those wastes not identified as such (i.e., not in a red bag). Puncture by infected needles, broken glass, or other sharp objects ("sharps") poses the single greatest hazard at a hospital incinerator. Treat all waste bags as though they contain sharps, even if sharps are typically handled separately. Assume any spillage in the waste handling area is infectious and avoid contact.

2. Exercise extreme caution in the vicinity of incinerator ash. Do not handle the incinerator ash. During some inspections, it may be necessary to obtain a sample of the incinerator ash for analysis. In such instances, the inspector should ask the incinerator operator or other facility personnel familiar with the hazards associated with the handling

of infectious wastes and sharps to take a sample of the ash. The inspector should recommend safety precautions to be taken by the sampler and should provide sampling tools (e.g., a sterile plastic trowel) and sample jar. The sampler should wear protective clothing, thick rubber or plastic gloves, eye protection, and a respirator or dust mask filter. If the ash has not been quenched with water, the sampler should carefully spray the ash both to douse any hot spots and to prevent fugitive emissions. In taking the sample, the sampler should use the sampling trowel with care in removing material from different areas of the ash pile so as not to cause fugitive dust emissions or cause puncture wounds from sharps. Although the ash is theoretically decontaminated, safety precautions still should be followed because the possibility of injury/infection exists due to the presence of sharps.

3. Determine whether a radioactivity hazard exists and take appropriate protective measures. Medical research facilities, including those at hospitals, may be licensed to incinerate radioactive wastes. At these facilities, such wastes are typically incinerated along with other wastes. Prior to the inspection, determine whether the facility is licensed to incinerate radioactive wastes. If so, ascertain the appropriate safety procedures and equipment, if applicable, from facility personnel or the radiation enforcement agency (NRC or analogous State agency). If possible, arrange a joint inspection with the radiation enforcement agency. Individuals required to enter the radioactive waste incinerator area to perform their jobs (this would include air agency inspectors) are entitled by law to see the incineration license. Examine the license to determine what materials may be incinerated and any waste or ash handling requirements. If the terms of the license are being violated, the inspection should be terminated immediately, and the radiation enforcement agency should be notified.

4. Internal inspections are unnecessary. Offline equipment at incinerator facilities including the incinerator and air pollution control devices may have a variety of infection, inhalation, asphyxiation, thermal burn, chemical burn, eye, and falling hazards. During a normal inspection, regulatory agency inspectors should not enter equipment even when it appears to be properly locked out and/or it is occupied by plant

maintenance personnel. All necessary inspection information can be obtained from outside the equipment. Sufficient time and appropriate safety equipment are not normally available during an inspection to ensure safety.

While it is not usually possible to gain entrance inside equipment, an inspector may wish to schedule a visit or followup visit while regularly scheduled proventive maintenance is being performed. All safety precautions should be strictly adhered to including lockout of all equipment and disconnection of the power supply.

5. Take all personal safety equipment. The minimum safety equipment for inspecting incinerators consists of gloves, safety glasses, safety shoes, sterile eye wash bottles, and a hard hat. In some cases, more sophisticated safety equipment (e.g., half-face respirator with acid gas cartridges or disposable dust masks) is necessary.

6. Use protective clothing and gloves. This equipment is needed when there is a risk of contact with infectious wastes, incinerator ash, air pollution control device solids, alkaline materials, or waste sludges. Gloves are also needed for climbing abrasive and/or hot ladders. Contaminated work clothes should either be discarded or washed separately from personal cloths.

7. Wear hearing protection. Hearing protection should be used whenever required by the facility and whenever it is difficult to hear another person speaking normally from a distance of 3 feet.

8. Avoid areas of suspected high pollutant concentration. Avoid areas such as malfunctioning incinerators operating at slight positive pressures, leaking expansion joints downstream of induced draft fans, fugitive emissions from positive pressure equipment, and any area with poor ventilation. Assume that any fugitives or stack emissions may contain infectious agents or acid gases. Even if a respirator is worn, it provides only limited protection.

9. Flush eyes contacted by alkaline materials. It is important to flush eyes as soon as possible after alkaline materials such as calcium hydroxide or quick limes are contacted. Flush for 15 to 30 minutes. Get medical attention even if you think the exposure was minor.

10. Shower immediately if contacted by alkaline materials. In the unlikely event that you are splashed with alkaline material, remove affected clothing and shower immediately for a period of at least 15 minutes.

11. Use grounding/bonding cables on probes. This is especially important downstream of electrostatic precipitators due to the possibilities of injuries resulting from severe muscle spasms caused by contact with high static voltages.

12. Avoid severely vibrating equipment. Equipment such as fans can disintegrate suddenly. Notify plant personnel immediately of the condition and leave the area.

13. Facility personnel must be present during the inspection. Never conduct inspections alone. Facility personnel accompanying you must be knowledgeable in incinerator operations, general safety procedures, and emergency procedures.

14. Follow all facility and agency safety requirements. Limit the inspection as necessary to ensure that you completely adhere to all facility and agency requirements.

15. Do not ask facility personnel to take unreasonable risks. Common problem areas include sampling high pH liquors, testing gas streams, working near hot ductwork, and working in areas with high pollutant concentrations.

16. Do not do anything which appears dangerous. If you think that it may be dangerous, it probably is. Do not abdicate your safety judgment to facility personnel who may or may not be safety conscious.

17. Never hurry during inspections. This causes careless walking and climbing accidents.

18. Interrupt the inspection if you feel sick. Interrupt the inspection immediately whenever you feel any of the following symptoms: headache, nausea, dizziness, drowsiness, loss of coordination, chest pains, shortness of breath, vomiting, and eye or nose irritation. These symptoms may be caused by exposure to toxic pollutants even though there is no odor.

3.3 EQUIPMENT-SPECIFIC SAFETY CONSIDERATIONS

Incinerators and add-on control devices are typically operated at negative pressure, i.e., the system uses an induced draft fan located downstream from the equipment. However, this is not always the case; the inspector should not assume negative pressure. Before beginning the inspection of the equipment, the inspector should discuss the configuration of the system to determine if any components are under positive pressure. Inhalation hazards are much greater around equipment under positive pressure because the direction of flow at any leaks will be from within the equipment to the outside. These hazards are diminished at negative pressure components because outside air is drawn into the equipment at any openings. In the material that follows, inhalation hazards are discussed as if the equipment is at positive pressure. Where the equipment is under negative pressure, these hazards should be considered but are not likely to pose a grave threat. Inhalation hazards associated with HWI facilities include but are not limited to infectious microorganisms, hydrogen chloride, toxic organic compounds, carbon monoxide, and heavy metal enriched flyash. At facilities licensed to incinerate radioactive wastes, gas streams may also carry radioactive materials.

3.3.1 Incinerators

3.3.1.1 Waste Storage and Handling Areas. All wastes should be treated as infectious wastes, regardless of labeling. Any liquids spilled in storage or handling areas should be considered infectious. All bags and other waste containers should be assumed to contain sharps, even when standard procedures call for sharps to be segregated from other wastes or contained within special rigid containers.

Direct skin contact with wastes should be scrupulously avoided. Gloves, protective clothing, and impermeable footware are required when there is any possiblility of contact. The inspector should not open infectious waste containers or otherwise handle the wastes. At facilities licensed to incinerate radioactive wastes, the inspector should be thoroughly familiar with any special waste storage or handling requirements and should carefully observe all protective equipment and safety requirements.

In addition to the normal safety precautions taken around moving machinery, inspectors evaluating incinerator feed mechanisms should take precautions to avoid exposure to infectious agents that could be emitted to the atmosphere during charging. Never peer into hoppers or ram feeders as flying objects could result in injury or exposure.

3.3.1.2 Eye Hazards in Observing Combustion. Never open observation doors or charging doors to peer into the incinerator during operation. Ideally, the incinerator will have sealed (i.e., glass) view ports that can be used for viewing the combustion chamber. However, if the incinerator does not have sealed viewports, do not open inspection or cleanout doors.

3.3.1.3 Burns. Incinerators operate at very high temperatures, and the potential for hot surfaces is high. Contact with the incinerator chamber walls, heat recovery equipment, ductwork, and stack surfaces should be avoided. Also, sampling probes may be very hot when removed from hot stacks and vents.

3.3.1.4 Incinerator Ash. While the incinerator ash from a properly operated HWI is not likely to be infectious or otherwize hazardous, caution still should be exercised to avoid skin contact or inhalation. Residues of incomplete combustion may be infectious or, more likely, toxic. The ash of incinerators licensed for radioactive wastes may be radioactive and require special handling. The inspector should familiarize him/herself with any special safety procedures and equipment needs and should avoid contact with the ash.

3.3.2 Wet Scrubbers

3.3.2.1 Venturi's at High Pressure. Positive pressure venturi scrubbers may operate at much higher positive static pressures than other types of air pollution control systems. Furthermore, there is a significant potential for corrosion and erosion of the scrubber vessel and ductwork. For these reasons, fugitive leaks are a common problem. The inhalation hazards can include asphyxiants, toxic gases, toxic particulate, and, at facilities licensed for radioactive wastes, radioactive materials. Inspectors should avoid all areas with obvious leaks and any areas with poor ventilation. Additionally, access hatches or viewing ports should not be opened during the inspection because of the risk of

eye injuries. During Level 3 and Level 4 inspections, only small-diameter sampling ports should be used.

3.3.2.2 Slip Hazards. Extreme care is often necessary when walking around the scrubber and when climbing access ladders. Slip hazards can be created by the water droplets reentrained in the exhaust gas, by the liquor draining from the pumps, and by the liquor seeping from pipes and tanks. These slip hazards are not always obvious. Furthermore, freezing can occur in cold weather.

3.3.2.3 Fan Imbalance. A few systems are subjected to fan imbalance conditions due to the buildup of sludge on the fan blades, the corrosion of the fan blades, the erosion of the fan blades, and a variety of other factors. The inspection should be terminated immediately whenever an inspector observes a severely vibrating fan. A responsible representative of the facility should be notified once the inspector reaches a safe location. Severely vibrating fans can disintegrate suddenly.

3.3.2.4 Sampling Liquors and Sludges. All liquor or sludge samples necessary for Level 3 or Level 4 inspections should be taken by the facility personnel, not the inspector. Furthermore, the inspectors should only ask responsible and experienced plant personnel to take the samples. Eye injuries and chemical burns (in some cases) are possible if the samples are taken incorrectly. Also, the liquor or sludge may contain infectious agents.

3.3.3 Dry Scrubbers

3.3.3.1 Inhalation Hazards. Poorly ventilated areas in the vicinity of positive pressure dry scrubber absorbers, particulate control systems, and/or ductwork should be avoided. There are a variety of inhalation hazards associated with HWI's, including but not limited to asphyxiants, toxic gases, toxic particulate, and, at facilities licensed for radioactive wastes, radioactive materials.

Concentrations of these pollutants (particularly HCl) can exceed the maximum allowable use levels of air-purifying respirators. Inspectors must be able to recognize and avoid areas of potentially significant exposure to fugitive emissions from the dry scrubbing system. A simple flowchart that indicates the locations of all fans is a useful starting

point in identifying portions of the system that operate at positive pressure.

3.3.3.2 Chemical and Eye Hazards. The strong alkalis used in dry scrubbing have the potential to cause severe eye damage. While the probability of eye contact and skin contact is relatively small for Agency inspectors, it is nevertheless important to keep in mind the general first aid procedures. These are briefly summarized below.

1. After eye contact, flushing should be started immediately;
2. Eyes should be flushed for 15 to 30 minutes;
3. After skin contact, all affected clothing should be removed, and the inspector should shower for a minimum of 15 minutes; and
4. Medical attention should be obtained in all situations.

During the routine inspection, agency personnel should note the locations of any eye wash stations and showers. These are generally located in the immediate vicinity of chemical handling areas. After the first aid procedures are completed, it is especially important to get qualified medical attention regardless of the presumed seriousness of the exposure. All inspectors should have full first aid and safety training before conducting field inspections of HWI's or any other type of air pollution source.

3.3.4 Fabric Filters

Most fabric filters installed at HWI facilities likely will be coupled with some sort of dry scrubber because of the concern with HCl and condensible metal emissions. However, at least one existing facility is equipped with a stand-alone fabric filter. The information presented in this section will generally be applicable in either of these cases. Where there is differentiation between fabric filters with and without an upstream scrubber, these differences will be pointed out.

3.3.4.1 Hot Surfaces. Stand-alone fabric filters serving HWI's must operate at high gas temperatures in excess of 300°F to avoid condensation of the HCl gas found in the gas stream. Even fabric filters located downstream from a dry scrubbing system are expected to operate at relatively high gas temperatures of 250° to 350°F. (These systems are not yet typical at HWI facilities; the temperature range given is based on typical municipal waste incineration systems.) Thus, uninsulated baghouse

roofs can be a serious burn hazard. Unfortunately, it is important to inspect this area of pulse jet fabric filters to identify possible air infiltration problems and to check the diaphragm valves and the compressed air pressure gauge.

3.3.4.2 Inhalation Hazards. Fugitive emissions from positive pressure fabric filter systems can accumulate in poorly ventilated areas around the baghouse. The inhalation hazards can include asphyxiants, toxic gases/vapors, toxic particulate, and, at facilities licensed for radioactive wastes, radioactive materials.

3.3.4.3 Opening Hatches. It is sometimes helpful to have plant personnel open one or more hatches of fabric filter compartments which are isolated for inspection. However, the discharge hopper hatches should not be opened during the inspection because hot, free-flowing dust can be released and cause severe burns. Opening of hopper hatches can also create the potential for hopper fire if the combustible content of the ash is high.

3.3.4.4 Flyash Storage and Handling. All materials collected by a fabric filter should be considered hazardous. At HWI facilities controlled with a stand-alone fabric filter, flyash may contain hazardous levels of metals, dioxins/furans, acids, and, at poorly operated units, infectious agents. At HWI facilities equipped with a dry scrubber upstream from the fabric filter, the same hazards exist, except that the possibility of exposure to acids is replaced by caustic exposure hazards. These hazards should be considered during inspection of flyash handling and disposal facilities, and skin contact and inhalation of fugitive dust should be avoided.

4.0 VISIBLE EMISSION OBSERVATION

The observation of the stack visible emissions from hospital waste incinerators is an important part of the air compliance inspection. Visible emission observations are important for two reasons. First, many State regulations stipulate opacity limits or the construction/operating permit likely will stipulate an opacity limit. Consequently, visual observation of the emissions provides a direct means of establishing compliance/noncompliance with a provision of the regulation.

Second, the presence of visible emissions provides an indication of a combustion/control problem. The cause of the emissions can be further investigated and evaluated to determine if a violation exists and to determine what corrective action is warranted. For example, a detached plume (i.e., a plume that forms in the atmosphere after exiting the stack) at a hospital incinerator likely is caused by condensing hydrogen chloride (HCl). A black plume is due to incomplete combustion of carbonaceous matter. The possible causes for various plume appearances are further discussed in Section 4.3.

Two primary methods of determining stack gas opacity are used. The first method is visible observation of the plume at the point of detachment from the stack by a qualified observer (i.e., the inspector) per EPA Reference Method 9. The second method is an instrument method, which employs a transmissometer that continuously monitors stack gas opacity. Each of these methods is briefly discussed below.

4.1 EPA REFERENCE METHOD 9

The EPA Reference Method 9--Visual Determination of the Opacity of Emissions from Stationary Sources--is the EPA method for determining opacity of visible emissions by a qualified observer. Method 9 involves observations of a hospital waste incinerator stack plume at the point of detachment and provides a simple means of assessing incinerator performance. The only problem with application of the method to hospital incinerators is that for incinerators controlled by wet scrubbers, the combustion gas likely will be saturated with moisture and a condensed water plume will be present. Although Method 9 may still be used for observing opacity in such cases, application of the method is more

difficult than in cases where the incinerator is controlled with a "dry" control device.

Method 9 is published in 40 CFR Part 60, Appendix A; an inspector must be certified and should be familiar with all aspects of the method. The requirements of Method 9 are summarized in Table 4-1. A Method 9 visible emission form is presented in Appendix D. Method 9 specifies that the opacity readings taken by the observer are used to calculate the average opacity for 6-minute intervals. Some State and local regulations may specify other averaging periods or different data reduction methods (i.e., maximum opacity limit never to be exceeded) for determining compliance. Nonetheless, the method of observation is the same.

4.2 CONTINUOUS EMISSION MONITORING FOR OPACITY

Either State law or the construction/operating permit might require that the facility continuously monitor the combustion gas opacity. Obviously, the advantage of a continuous emission monitoring system (CEMS) is that the opacity can be determined at all times during operation of the incinerator. The information provided by the CEMS can be used by the operator to identify operating problems on a real-time basis; consequently, immediate corrective action can be taken. The CEMS data records also can be used by the regulatory agency to assess historical performance.

A transmissometer is used to monitor stack gas opacity. The operating principle of a transmissometer involves measurement of the absorbance of a light beam across the stack or duct. Transmissometers use a light source directed across the stack towards a detector, or reflector, on the opposite side. The amount of light absorbed or scattered is a function of the particles in the light path, path length (duct diameter), and several other variables that are considered in the design and installation. Figure 4-1 is a schematic of a dual-pass transmissometer system. Additional detailed information on transmissometers is available in Reference 1.

The EPA has promulgated performance specifications for opacity monitoring systems (Performance Specification 1--Specification and Test Procedures for Opacity Continuous Emission Monitoring Systems in Stationary Sources; 40 CFR Part 60, Appendix B). These specifications are

TABLE 4-1. SUMMARY OF METHOD 9 REQUIREMENTS

Observer

1. Must be qualified (certified) by procedures established in Method 9
2. Certification valid for 6 months

Position of Observer

1. At sufficient distance to provide a clear view
2. Sun in 140° sector to observer's back
3. Line of vision approximately perpendicular to plume direction and to longer axis of rectangular outlets
4. Line of sight does not pass through more than one plume where there are multiple outlets

Field Records

1. Plant name
2. Emission location
3. Type of facility
4. Observer's name and affiliation
5. Sketch of observation position relative to source
6. Date
7. Data to be recorded both at start and end of observation period:

    - Time
    - Estimated distance to source
    - Approximate wind direction and speed
    - Sky condition (presence and color of clouds)
    - Plume background

Observations

1. Read at point of greatest opacity where condensed water vapor is not present

    - For attached steam plumes, read at the point of greatest opacity after the condensed water vapor has evaporated and record the approximate distance from the outlet;
    - For detached steam plumes, read at the outlet before water vapor condenses

2. Observe the plume momentarily for a reading at 15-second intervals

(continued)

TABLE 4-1. (continued)

Recording Observations

1. Record readings to nearest 5 percent opacity at 15-second intervals
2. Take a minimum of 24 readings

Data Reduction

1. Reduce the data by averaging each set of 24 consecutive readings
2. Sets may consist of any 24 consecutive readings but may not overlap

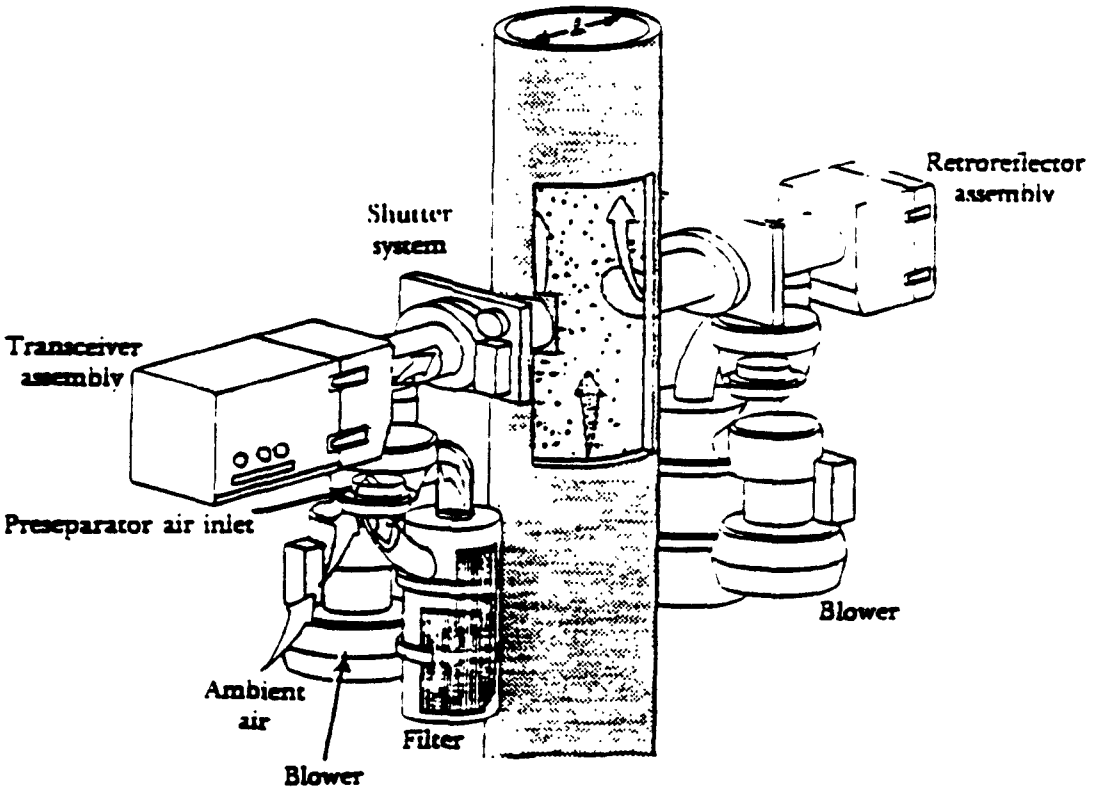

Figure 4-1. Typical transmissometer installation for measuring opacity.[1]

applicable for opacity CEMS applied at sources regulated by new source performance standards (NSPS). Table 4-2 presents a summary of these performance specification requirements. Hospital incinerators do not fall into this category, but typically, State regulations also will require that a performance test be conducted at the time of initial installation and startup. Typically, a transmissometer system will have a means of automatically checking instrument calibration on a regular schedule (e.g., daily) by placing a filter of known light absorbance in the light path. Calibration requirements for transmissometers subject to NSPS are specified in 40 CFR 60.13; daily calibration checks are required.

Prior to the inspection, the inspector should review the source file to determine the opacity monitoring requirements, if any, for the facility. The calibration requirements and recordkeeping requirements should be identified. The results of the last performance specification test or quality assurance audit should be reviewed.

Transmissometers are sophisticated electronic instruments; consequently, evaluation of the performance of the monitor (e.g., calibration accuracy) is not easily assessed by the inspector. However, gross operational, maintenance, and recordkeeping problems can be identified during an inspection. If problems are suspected, a complete performance audit of the system can be conducted at a later date by qualified personnel. Performance audit procedures for opacity monitors are presented and discussed in an EPA document entitled "Performance Audit Procedures for Opacity Monitors" (Reference 2).

During the inspection, the inspector should:

1. Determine that the monitor is operating;

2. Review historical calibration records to assess calibration problems;

3. Review the opacity data records to assess recordkeeping procedures; and

4. Review historical data to assess frequency of excess emissions.

The inspector should locate the monitor and visually inspect its condition including, for example, the operation of accessories such as blowers designed to keep lenses clean. This initial visual inspection will give the inspector a general idea of whether the monitor is well

TABLE 4-2. PERFORMANCE SPECIFICATIONS FOR OPACITY MONITORS

Parameter	Specifications
Calibration error[a]	≤3 percent opacity
Response time	≤10 seconds
Conditioning period[b]	≥168 hours
Operational test period[b]	≥168 hours
Zero drift (24-hour)[a]	≤2 percent opacity
Calibration drift (24-hour)[a]	≤2 percent opacity
Data recorder resolution	≤0.5 percent opacity

[a]Expressed as the sum of the absolute value of the mean and the absolute value of the confidence coefficient.
[b]During the conditioning and operational test periods, the CEMS must not require any corrective maintenance, repair, replacement, or adjustment other than that clearly specified as routine and required in the operation and maintenance manuals.
Source: 40 CFR Part 60, Appendix B.

maintained. The monitor data display/recorder should be located and the following questions asked:

1. Is the monitor online and recording data?

2. Are any system failure warning lights illuminated?

3. Is the data recording system operating and does the strip chart appear normal (e.g., values less than zero are not normal)?

4. Does the current indicated opacity level appear correct based upon visual observation? For example, if the monitor indicates a steady baseline reading of 0 percent opacity, but visual inspection indicates excursions of up to 20 percent opacity, a problem exists.

The inspector should ask to review the most recent calibration data to assure that:

1. Calibration frequency is at least that specified in the regulations or construction/operating permit;

2. The value being used as the calibration value is the same as the calibration level identified during the most recent performance test; if not, an explanation of how the new calibration value was determined should be available; and

3. Corrective action has been taken (i.e., the instrument has been recalibrated) when calibration checks indicated the monitor was out of calibration.

The inspector should review the opacity data records to determine:

1. If recordkeeping procedures are consistent with those required in the regulations and or construction/operating permit (e.g., continuous strip chart record on a real-time basis or data logger/recorder of 6 minute averages, etc.);

2. The frequency of excess emissions; and

3. Instrument availability.

Finally, the inspector should request to see the maintenance log for the monitor (if required by the regulations or operating permit). The maintenance log should be reviewed to determine the frequency of maintenance and the presence of any major operational problems that are recurring and are affecting instrument availability.

The identification of serious problems or deficiencies with the opacity CEMS by the inspector indicates that a complete system/performance audit of the CEMS should be considered.

4.3 SPECIAL CONSIDERATIONS FOR OPACITY OBSERVATIONS AT HOSPITAL INCINERATORS

4.3.1 Stack Location

At some facilities, the incinerator is located on the roof. This location may present an observer on the ground with a line of sight at an extreme angle upward through the plume, possibly biasing opacity readings high. Under these circumstances, it is preferable that the observer determine opacity from an adjacent building or from the roof of the HWI facility.

Because the incinerator may be located in a confined space, it may be difficult to obtain an appropriate line of site that is in the proper orientation with the sun and/or that is a sufficient distance away from the source. Additionally, the stack may be shorter than the adjacent building causing shadow and orientation problems.

4.3.2 Steam (Condensing Water Vapor) Plumes

At HWI facilities equipped with wet scrubbers, the plume typically will be saturated with water and will contain condensed water vapor as it leaves the stack (an attached steam plume). Under these circumstances, the observer must read the plume's opacity at a point after the condensed water vapor has dissipated. In most cases, such readings at an HWI facility will not be meaningful because the plume will be diluted at the point of observation.

At uncontrolled facilities and those equipped with a spray dryer/ fabric filter or stand-alone fabric filter, depending upon atmospheric conditions (temperature and relative humidity), water vapor may condense in the plume after it leaves the stack (a detached steam plume). Opacity readings must be made in the section of the plume prior to this condensation. If other condensibles (e.g., HCl or metals) are in the gas stream, they will not be included in these opacity readings.

4.3.3 Evaluating Visible Emissions

Common opacity problems at hospital waste incinerators and their typical causes are discussed below.

4.3.3.1 Dense Black Smoke. Dense black smoke is due to incomplete combustion of carbonaceous material. The probable cause is insufficient secondary chamber combustion air. Either the combustion air to the secondary chamber is improperly set, or volatile matter is being generated in excess of the incinerator's secondary chamber capacity.

4.3.3.2 Detached White Plume. A detached hazy white plume is probably caused by HCl condensing in the cooling gas stream. This situation cannot be controlled by modifying operation of the incinerator, other than by decreasing the quantity of chlorine-containing wastes fed to the incinerator.

4.3.3.3 Attached White Plume. An attached white plume indicates the presence of submicron aerosols in the gas stream. Possible causes are insufficient secondary combustion chamber temperature or the presence in the waste of noncombustible inorganic materials that volatilize and are emitted to the atmosphere.

4.3.4 Fugitive Emissions

Fugitive emissions may be generated during ash handling or by the action of wind on improperly stored ash at HWI facilities. These emissions are typically intermittent and extremely variable, presenting some difficulties with regard to characterization by the observer.

The observer should note the location of the fugitive emissions and, as specifically as possible, quantify the duration and magnitude (e.g., fugitive emissions from ash removal door; constant emissions for 45 seconds; dense plume of approximately 75 percent opacity at 5 feet from door; some flames also emitted).

4.4 REFERENCES FOR CHAPTER 4

1. Jahnke, J. A. APTI Course SI: 476A Transmissometer Systems--Operation and Maintenance, and Advanced Course; EPA 450/2-84-004. September 1984.

2. Entropy Environmentalists, Inc. 1983. Performance Audit Procedures for Opacity Monitors. EPA 340/1-83-010.

5.0 HOSPITAL INCINERATION SYSTEMS

5.1 INTRODUCTION

Incineration is the process by which combustible materials are burned, producing combustion gases and noncombustible ash. The product combustion gases are vented directly to the atmosphere or to the atmosphere after treatment in an air pollution control device. The noncombustible ash is removed from the incinerator system and is disposed, usually in a landfill. Incineration provides the advantage of greatly reducing the mass and volume of the waste. Typically, mass is reduced by as much as 75 percent, and volume can be reduced by 95 percent or more. This reduction substantially reduces transportation and disposal costs. For infectious hospital wastes, another major objective of the incineration process is the destruction of infectious organisms (pathogens) that may exist in the waste. The pathogens are destroyed by exposure to the high temperatures which exist within the incinerator. Incineration of hospital wastes also is attractive aesthetically because it destroys organic components of the waste that the community often finds objectionable when wastes are disposed of in landfills.

Two additional objectives achievable through proper operation of hospital waste incinerators are minimizing the organic content in the solid residue and controlling emissions to the atmosphere to acceptable levels. Generally, tight control on organics in the ash, i.e., good burnout, promotes waste reduction and pathogen destruction. Reduction of atmospheric emissions of constituents that are potentially harmful to human health and the environment is a prerequisite to acceptance of hospital incineration as a feasible disposal alternative by the community.

5.2 TYPES OF HOSPITAL INCINERATOR SYSTEMS

The terminology used to describe hospital incinerators that has evolved over the years is quite varied. Multiple names have been used for the same basic types of incinerators, and much of the terminology does not enhance precise definitions. Historically, however, most incinerators were grouped into one of three types--"controlled air," "multiple chamber," and "rotary kiln."

Before the early 1960's, the incineration systems used were primarily "multiple-chamber" systems designed and constructed according to Incinerator Institute of America (IIA) (now defunct) incinerator standards. The multiple-chamber incinerator has two or more combustion chambers. The two traditional designs used for multiple-chamber incinerators are the "in-line" hearth and "retort" hearth designs (these designs are further explained in Section 5.2.2.4). These "multiple-chamber" systems were designed to operate at high excess-air levels and hence are often referred to as "excess-air" incinerators.[1] These units will be referred to as "multiple-chamber incinerators" throughout this manual. Multiple-chamber, excess-air incinerators are still in operation at some hospitals; their use typically is for pathological wastes.[2] Note that although the singular term "multiple-chamber" incinerator is often used to describe this type of incinerator, in reality, the typical controlled-air modular unit is also a multiple-chamber incinerator.

The incineration technology that has been used most extensively for hospital wastes over the last 20 years generally has been called "controlled-air" incineration. This technology is also called "starved-air" combustion, "modular" combustion, and "pyrolytic" combustion. These units will be referred to as "controlled-air incinerators" throughout this manual. Most systems are prefabricated units transported to the site in parts; hence the name "modular." The systems were called "controlled air" or "starved air" because they operate with two chambers in series and the primary chamber operates at substoichiometric conditions. Similar modular "controlled-air" units which operate with excess-air levels in the primary chamber are also manufactured and sold for combustion of municipal solid waste, but are not as widely used.

Rotary kiln incineration systems have been widely used for hazardous waste incineration in the U.S. As with the other units, the rotary kiln incinerator has two combustion chambers. The primary chamber is a horizontal rotating kiln that operates with excess air. The waste is charged to the elevated end of the kiln and moves through the kiln to the discharge end at a rate determined by the angle of inclination and speed of rotation. The exhaust gases exit the kiln to a fixed secondary chamber. There are a few applications in the U.S. and Canada where the rotary kiln incineration technology is being applied to hospital waste incineration.[3]

This historical grouping is of some assistance in understanding how hospital incinerators operate, but it is limited because it does not address the complete combustion "system." Three parameters define the hospital incinerator system--the method of air supply and distribution, the method of charging waste and moving waste through the system, and the method of ash removal. In hospital incinerators, air supply/distribution systems generally are one of two types, depending on whether the primary chamber operates under substoichiometric (i.e., starved-air) or excess-air conditions. Charging can be accomplished in one of three modes--batch, intermittent, or continuous. Ash is removed on a batch or a continuous basis. Table 5-1 identifies the major types of incinerators that are likely to be found at U.S. hospitals and characterizes them with respect to the three key factors desribed above. Because air supply is particularly important to achieving good combustion, the basic principles of systems that operate at substoichiometric (starved-air) and excess-air levels in the primary chamber are described in detail in the first subsection below. The second subsection describes each of the types of incinerators that are identified in Table 5-1.

5.2.1 Principles of Air Supply

5.2.1.1 Controlled-Air Incineration. The principle of controlled-air incineration involves sequential combustion operations carried out in two separate chambers. Figure 5-1 is a simplified schematic of an incinerator that operates on controlled-air principles.

The primary chamber (sometimes referred to as the ignition chamber) receives the waste, and the combustion process is begun in a substoichiometric oxygen atmosphere. The amount of combustion air added to the primary chamber is strictly regulated ("controlled"). The combustion air usually is fed to the system as underfire air. Three processes occur in the primary chamber. First, the moisture in the waste is volatilized. Second, the volatile organic fraction of the waste is vaporized, and the volatile gases are directed to the secondary chamber. Third, the fixed carbon remaining in the waste is combusted.

The combustion gases containing the volatile combustible materials from the primary chamber are directed to the secondary chamber (sometimes referred to as the "combustion chamber"). There, the combustion air is

TABLE 5-1. CLASSIFICATION OF HOSPITAL INCINERATORS

Type of incinerator	Air supply[a]	Waste feed	Ash removal
Batch/controlled air	Starved	Batch (manual or mechanical); one batch per burn	Batch at end of burn
Intermittent/controlled air	Starved	Manual or mechnical batch feed; multiple batches per burn	Batch at end of burn
Continuous/controlled air	Starved	Mechanical semicontinuous multiple batch feed	Intermittently or continuously during burn
Retort hearth	Excess	Batch (manual or mechanical)	Batch at end of burn
In-line hearth	Excess	Batch (manual or mechanical)	Batch at end of burn
Rotary kiln	Excess	Mechanical continuous feed	Continuous

[a]Indicates whether primary chamber operates at below (starved) or above (excess) stoichiometric air levels.

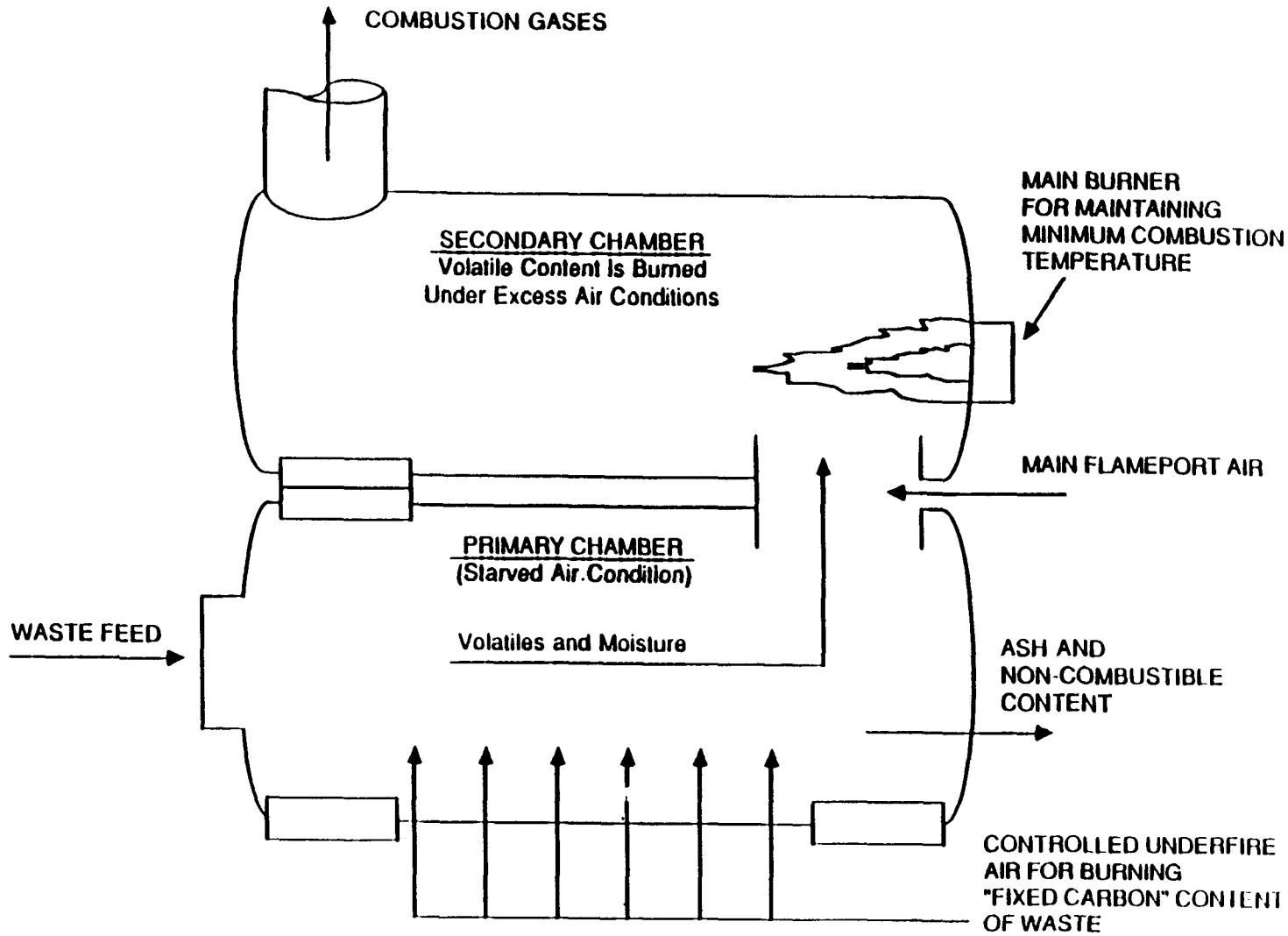

Figure 5-1. Schematic of a controlled-air incinerator.[4]

regulated to provide an excess of oxygen and is introduced to the chamber in such a manner as to produce turbulence to promote good mixing of the combustion gases and combustion air. This gas/air mixture is burned, usually at high temperatures. The burning of the combustion gases under conditions of high temperature, excess oxygen, and turbulence promotes complete combustion.

Figure 5-2 is a diagram showing the relationship between the temperature in the primary and secondary chambers and the combustion air level. This figure illustrates that the temperatures in the chambers can be controlled by modulating the combustion air supply. Combustion control for a controlled-air incinerator is usually based on the temperature of the primary (ignition) and secondary (combustion) chambers. Thermocouples within each chamber are used to monitor temperatures continuously; the combustion air rate to each chamber is adjusted to maintain the desired temperatures. An alternative control mode is to monitor the oxygen level, which is an indication of the excess-air level, within the combustion chamber. The combustion air level is then set or modulated to maintain the desired excess-air (oxygen) level. Systems operating under "controlled-air" principles have varied degrees of combustion air control. In many systems, the primary and secondary combustion systems are automatically and continuously regulated or "modulated" to maintain optimum combustion conditions despite varying waste composition and characteristics (e.g., moisture content, volatile content, Btu value).[5] In other systems (particularly batch or intermittent systems), the combustion air level control is simplified and consists of switching the combustion air rate from a "high" to a "low" level setting when temperature setpoints are reached or at preset time intervals.

The controlled-air technique has several advantages over an excess air mode. Limiting air in the primary chamber to below stoichiometric conditions prevents rapid combustion and allows a quiescent condition to exist within the chamber. This quiescent condition minimizes the entrainment of particulate matter in the combustion gases which ultimately are emitted to the atmosphere. High temperatures can be maintained in a turbulent condition with excess oxygen in the secondary chamber to assure complete combustion of the volatile gases emitted from the primary

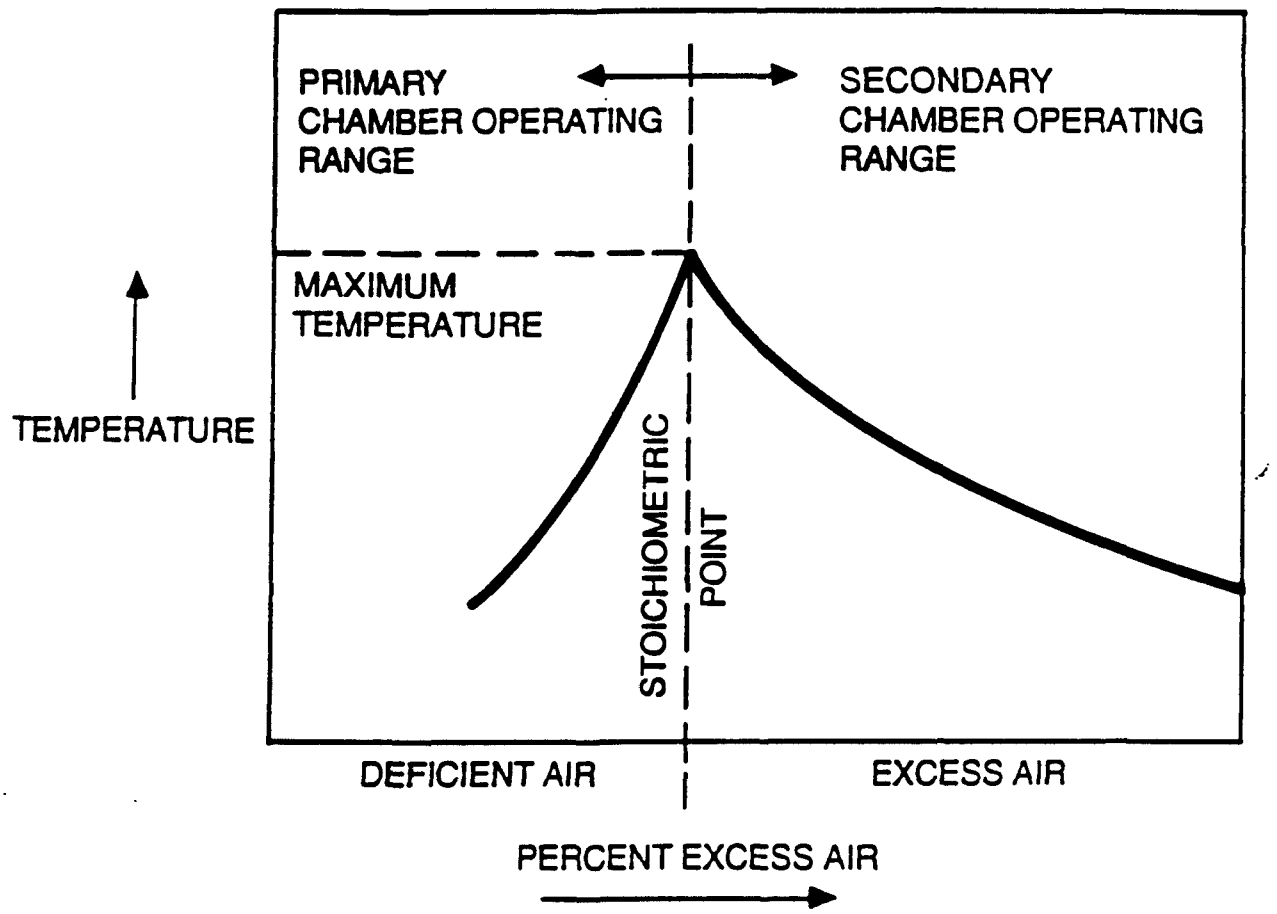

Figure 5-2. Control of temperature as a function of excess air.[6]

chamber. The temperature of the secondary chamber can be maintained in the desired range (hot enough for complete combustion but not so hot to cause refractory damage) by separately controlling the excess-air level in the secondary chamber; as the excess-air level is increased, the temperature decreases. Additionally, control of the primary chamber combustion air to below stoichiometric levels maintains primary chamber temperatures below the melting and fusion temperatures of most metals, glass, and other noncombustibles, thereby minimizing slagging and clinker formation.

For controlled-air combustion, the capacity of the secondary chamber dictates (i.e., limits) the burning or charging rate. The secondary chamber must have a volume such that the volatile gases, as they are released from the primary chamber, are retained in the chamber for sufficient time and at sufficient excess oxygen levels to ensure their complete combustion. The volatile gases' retention times may range from less than ½ second to more than 3 seconds. In order to maintain the designed retention time, waste must be charged at the designed rate; overcharging can cause excessive primary chamber temperatures, high combustion gas velocities, and shorter retention times, while undercharging can cause lower primary chamber temperatures, lower combustion gas velocities, and longer retention times.

5.2.1.2 Multiple-Chamber Incineration. The significant difference between multiple-chamber incineration and controlled-air incineration is that the primary chamber in the excess air unit is operated with above stoichiometric air levels. The waste is dried, ignited, and combusted in the primary chamber. Moisture and uncombusted volatile components pass out of the primary chamber and through a flame port into the secondary chamber. Secondary combustion air is added through the flame port and is mixed with the volatile components in the secondary chamber where combustion is completed. Multiple-chamber incinerators are designed for surface combustion of the waste which is achieved by predominant use of overfire combustion air and by limiting the amount of underfire air. Multiple-chamber, excess-air incinerators operate with an overall excess-air range of 300 to 600 percent.[7] In older units, combustion air typically was provided by natural draft via manually adjusted dampers and

air in-leakage through charging or ash removal doors. Newer multiple-chamber incinerators often use forced draft combustion air blowers to provide the combustion air to the combustion chambers.

Because of the predominant use of overfire air, high excess air rate, and surface combustion, turbulence and gas velocities are high in the primary chamber. These conditions result in relatively high particulate generation and entrainment. Therefore, multiple-chamber units have higher particulate emission rates than controlled-air units.

5.2.2 Hospital Incinerator Descriptions

5.2.2.1 Batch/Controlled-Air Incinerators. The least complex hospital incinerators are the batch/controlled-air units. The operation of these units is relatively simple in that the incinerator is charged with a "batch" of waste, the waste is incinerated, the incinerator is cooled, and the ash is removed through the charging door; the cycle is then repeated. (For this manual, the term "batch feed" is used to refer to an incinerator that is loaded with one batch of waste during the combustion cycle; the term "intermittent duty" is used to refer to units where multiple charges are made.) Incinerators designed for this type of operation range in capacity from about 50 to 500 lb/h. In the smaller sizes, the combustion chambers are often vertically oriented with the primary and secondary chambers combined within a single casing. Figure 5-3 is a schematic of a smaller controlled-air incinerator intended for batch operation. This unit's combustion chambers are rectangular in design and are contained within the same casing.

Batch/controlled-air units can be loaded manually or mechanically. For the smaller units up to about 300 lb/h, manual waste feed charging typically is used. Manual loading involves having the operator load the waste directly to the primary chamber without any mechanical assistance. Typically, for a batch-type unit, one loading cycle per day is used. The incinerator is manually loaded; the incinerator is sealed; and the incineration cycle is then continued through burndown, cooldown, and ash removal without any additional charging. Ash is removed manually at the end of the cycle by raking or shoveling the ash from the primary chamber through the charging door.

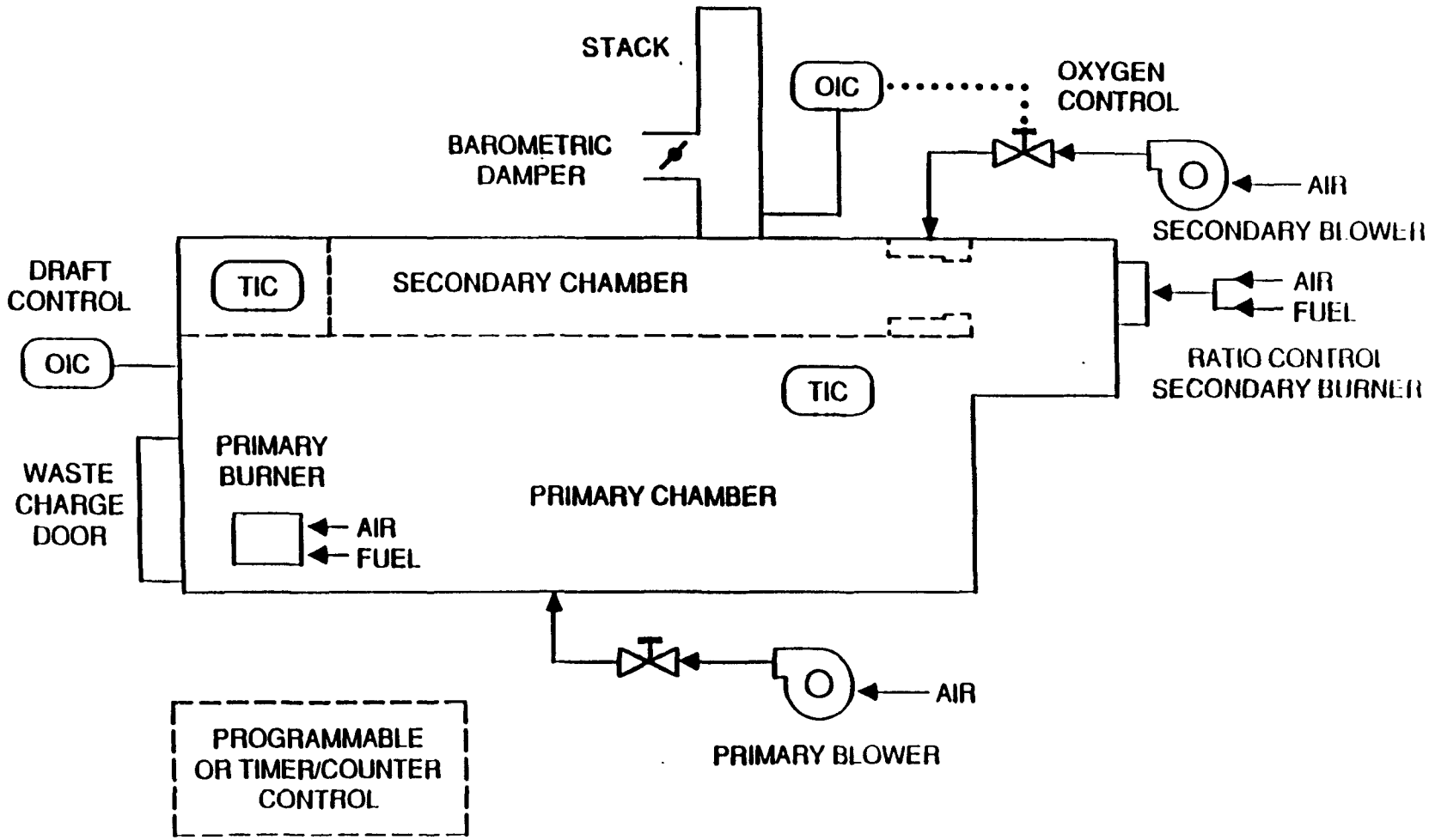

Figure 5-3. Schematic of a batch/starved-air incinerator.[8]

5.2.2.2 Intermittent/Controlled-Air Incinerators. When mechanical feeders are employed, the charging procedures of an incinerator that could operate in batch mode often are varied to include multiple charges (batches) during the 12 to 14 hour operating period before final burndown/cooldown is initiated. These intermittent units typically operate in the 50 to 1,000 lb/h range. The intermittent charging procedure allows the daily charge to the incinerator to be divided into a number of smaller charges that can be introduced over the combustion cycle. Consequently, a more uniform gas stream is fed to the secondary chamber, and complete burnout of the residue in the primary chamber can be achieved more easily. Figure 5-4 is a drawing of a small incinerator which is intended for intermittent operation when fitted with the proper manual or automatic charging system to assure operator safety and limit air in-leakage.

A typical daily operating cycle for a controlled-air batch type incinerator is as follows:

Operating step	Typical duration
1. Cleanout of ash from previous day	15 to 30 minutes
2. Preheat of incinerator	15 to 60 minutes
3. Waste loading/combustion	Up to 14 hours
4. Burndown	2 to 4 hours
5. Cooldown	5 to 8 hours

For intermittent-duty operation, the daily combustion cycle of the incinerator is limited to about a 12- to 14-hour period. The remainder of the 24-hour period is required for burndown, cooldown, ash cleanout, and preheat.

For units in the 300 to 500 lb/h range, mechanical waste feed systems are often employed, and for units above 500 lb/h, mechanical waste feed systems are normally employed. The typical mechanical waste feed system is a hopper ram assembly. In a mechanical hopper/ram feed system, waste is manually placed into a charging hopper, and the hopper cover is closed. A fire door isolating the hopper from the incinerator opens, and the ram moves forward to push the waste into the incinerator. The ram reverses to a location behind the fire door. After the fire door closes, the ram retracts to the starting position and is ready to accept another charge. Water sprays typically are located just behind the fire door and

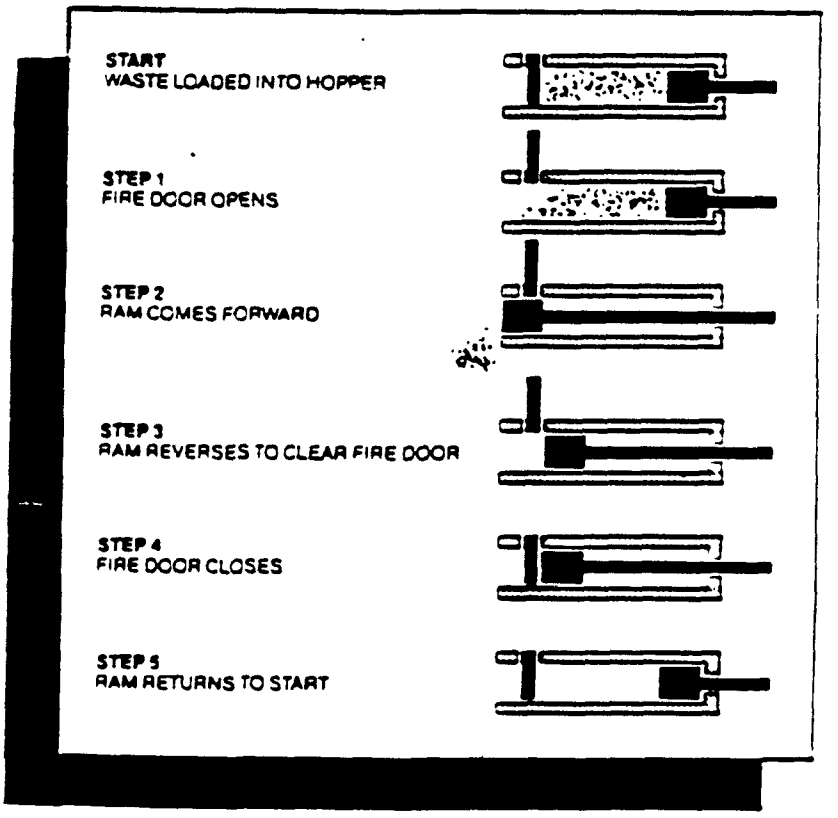

Figure 5-4. Operating sequence of a waste charging hopper/ram system.[9]

are used to cool the ram prior to retraction in order to prevent ignition of the waste by the ram in the hopper/ram assembly. The entire charging sequence is normally timed and controlled by an automatic sequence. For batch type incinerators, the sequence would be set up to be manually started by the operator. Figure 5-5 schematically presents the charging sequence of a mechanical ram charging system.

Mechanical loading systems have several advantages. First, they provide added safety to the operating personnel by preventing heat, flames, and combustion products from escaping the incinerator during charging. Second, they limit ambient air infiltration into the incinerator; ambient air infiltration works against the controlled-air combustion principal of controlling combustion rate by strictly controlling the quantity of available combustion air. Third, they enable incinerators to be safely charged with smaller batches of waste at regulated time intervals.

Note that even with intermittent-duty incinerators, a limiting factor for the incinerator operations is ash removal. As with the batch-operated units, the waste loading/combustion cycle must stop, and the incinerator must pass through burndown and cooldown cycles, before the incinerator can be opened for daily ash removal. The ash usually is manually removed by raking and/or shoveling from the primary chamber. Consequently, a major improvement in operations can be achieved by using continuous or intermittent ash removal as described in the subsection below.

5.2.2.3 Continuous/Controlled-Air Incinerators. Controlled-air units intended for continuous operation are available in the 500 to 3,000 lb/h operating range. Continuous/controlled-air units operate according to the controlled-air principles of the systems described earlier. However, continuous operation or combustion requires a mechanism for automatically removing ash from the incinerator hearth. The ash must be moved across the hearth, collected, and removed from the combustion chamber. Continuous ash removal while the incinerator is operating removes the requirement for burndown and cooldown cycles.

Continuous-operation units typically will have mechanical waste feeding systems. For large continuous-operation units, the charging sequence may be fully automatic. The incinerator then can be

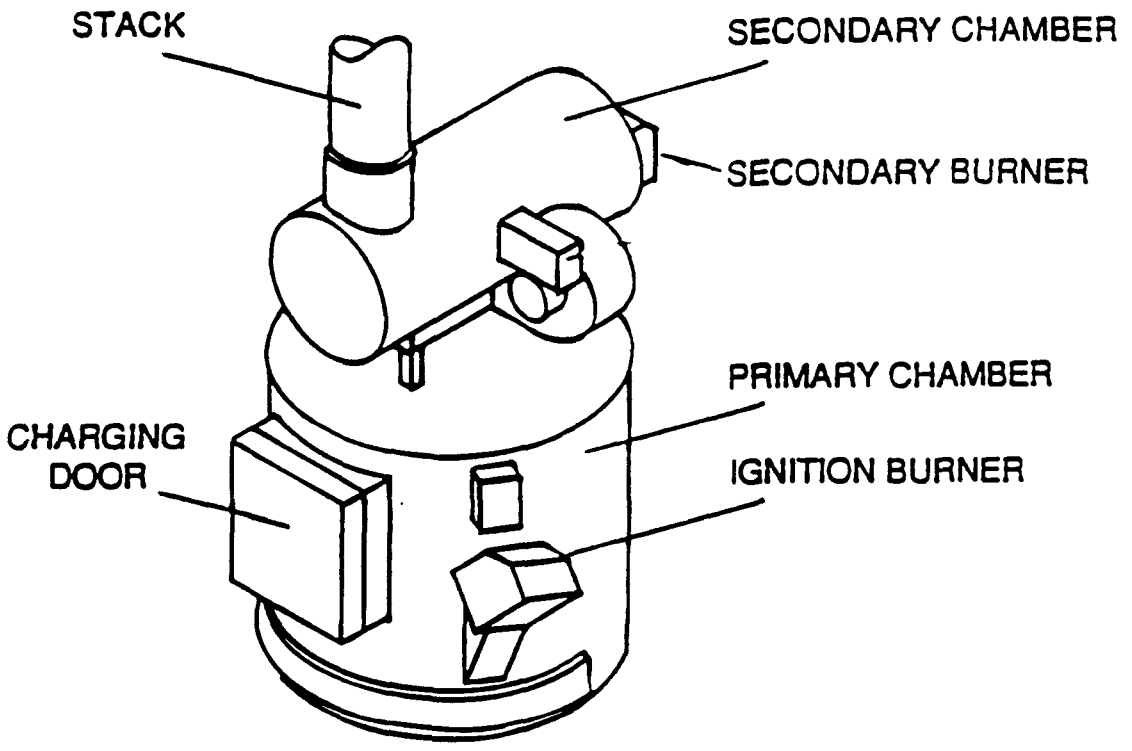

Figure 5-5. Intermittent/controlled-air incinerator with vertical primary chamber and horizontal secondary chamber.[10]

automatically charged with relatively small batches (in relation to the primary chamber capacity) at frequent, regulated time intervals. The use of frequent, small charges promotes relatively stable combustion conditions and approximates steady-state operation. For large systems, the mechanical charging system may include waste loading devices such as cart dumpers, which automatically lift and dump the contents of carts, which are used to collect and contain the waste, into the charge hoppers. Use of these loading devices reduces the operators need to handle infectious waste and, consequently, further improves worker safety.

For smaller units, the mechanical charging ram is sometimes used to move the ash across the hearth. As a new load of waste is pushed into the incinerator, the previous load is pushed forward. Each subsequent load has the same effect of moving the waste across the hearth. The waste should be fully reduced to ash by the time it reaches the end of the hearth. For larger systems, one or more special ash rams are provided to move the waste across the hearth.

Typically, when the ash reaches the end of the hearth, it drops off into a discharge chute. One of two methods for collecting ash is usually used. The ash can be discharged directly into an ash container positioned within an air-sealed chamber. When the container is full, it is removed from the chamber and replaced with an empty ash container. The second method is for the ash to be discharged into a water pit. The water bath quenches the ash, and it also forms an air seal with the incinerator. A mechanical device, either a rake or a conveyor, is used to remove the ash from the quench pit intermittently or continuously. The excess water is allowed to drain from the ash as it is removed from the pit, and the wetted ash is discharged into a container for transport to a landfill. Figure 5-6 is a drawing of a continuous-operation controlled-air unit with automatic mechanical ash removal and a mechanical hopper/ram charging assembly.

5.2.2.4 Multiple-Chamber Incinerators. Two traditional designs that are used for multiple-chamber incinerators are the "in-line" hearth and "retort" hearth. Figure 5-7 depicts the retort design multiple-chamber incinerator. In the retort design, the combustion gases turn in the vertical direction (upward and downward) as in the in-line incinerator,

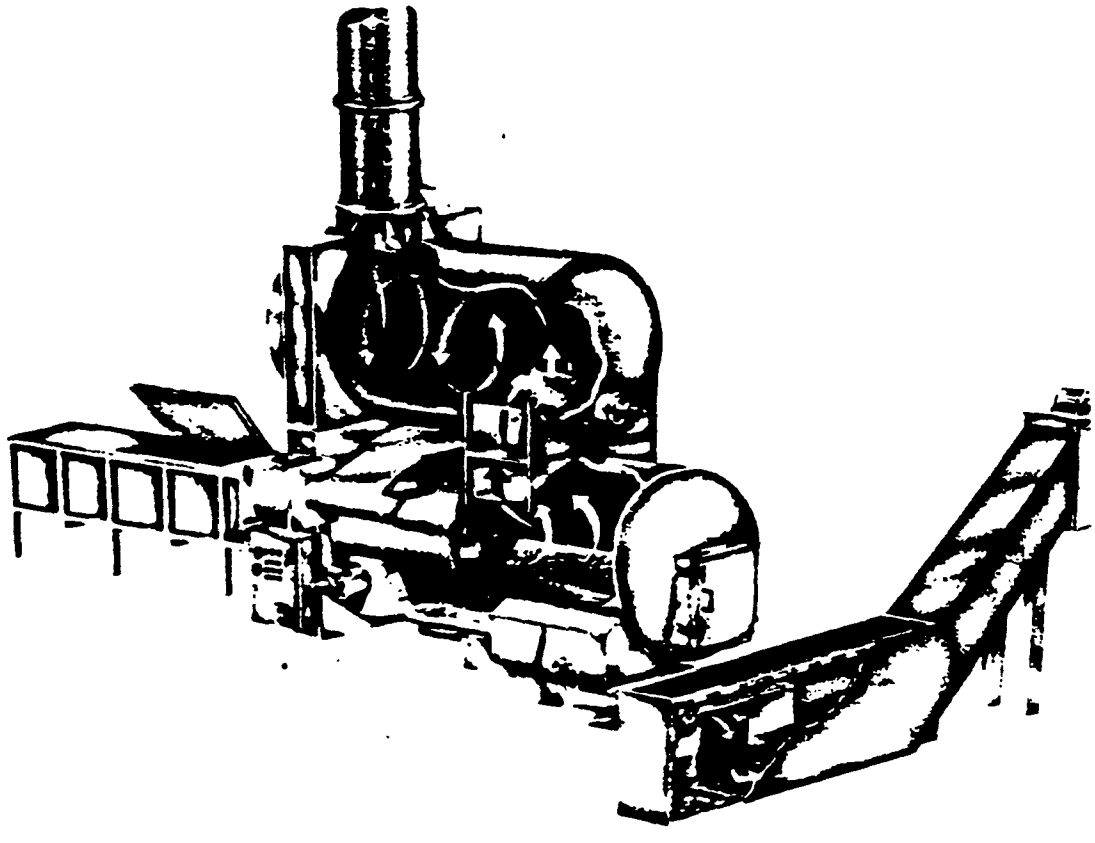

Figure 5-6. Schematic of a continuous operation controlled-air incinerator with mechanical charging and ash removal.[11]

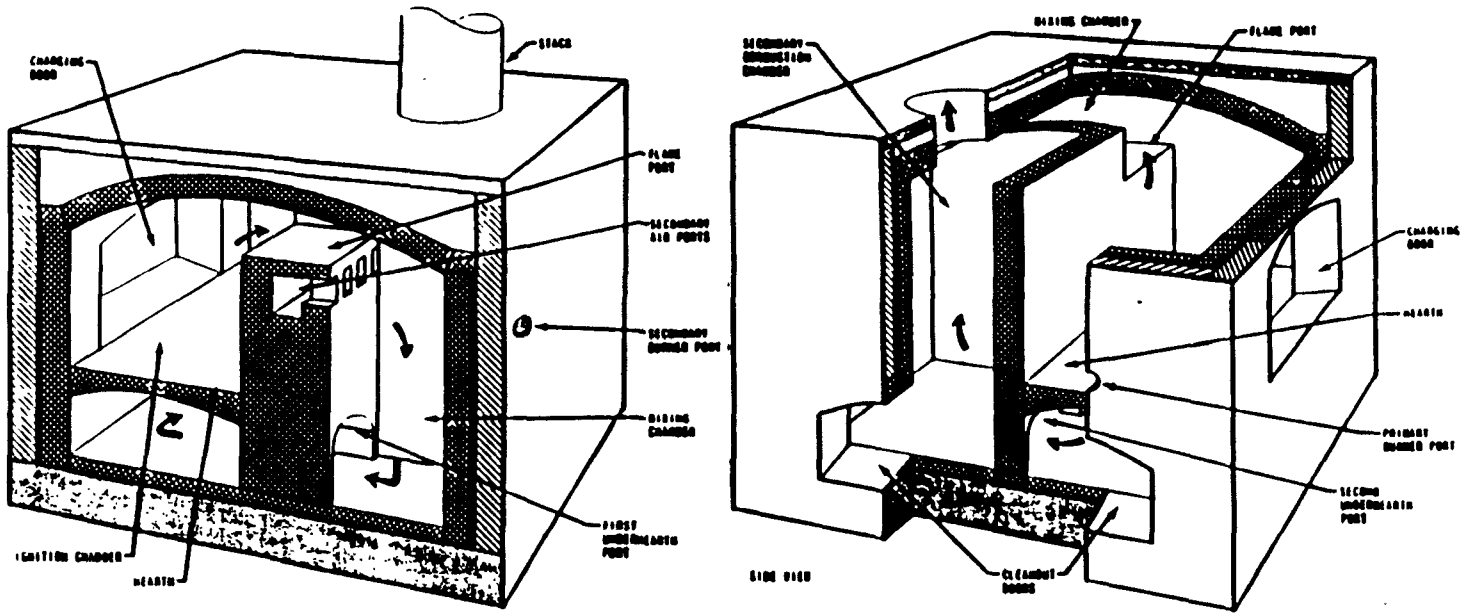

Figure 5-7. Retort multiple-chamber, excess-air incinerator for pathological wastes.[12]

but also turn sideways as they flow through the incinerator. Because the secondary chamber is adjacent to the primary chamber (they share a wall) and the gases turn in the shape of a U, the design of the incinerator is more compact. Figure 5-8 depicts the in-line hearth design. For the in-line hearth, flow of combustion gases is straight through the incinerator with turns in the vertical direction only (as depicted by the arrows in Figure 5-8). The retort design performs more efficiently than the in-line design in the capacity range of less than 750 lb/h. In-line incinerators perform better in the capacity range greater than 750 lb/h. The retort design more typically is used in hospital waste applications.

Multiple-chamber incinerators may have fixed hearths or grates or a combination of the two in the primary chamber. The use of grates for a system incinerating infectious waste is not recommended because liquids, sharps, and small partially combusted items can fall through the grates prior to complete combustion or sterilization.

Like the controlled-air unit, combustion in the multiple-chamber incinerator occurs in two combustion chambers, but the primary chamber operates with excess air. Ignition of the waste (initially by a primary burner), volatilization of moisture, vaporization of volatile matter, and combustion of the fixed carbon occur in the primary chamber. The combustion air for these processes is controlled on old units by natural draft, manually adjusted dampers, or by forced draft combustion air blowers on newer units. The combustion gases containing the volatiles exit the primary chamber through a flame port into a mixing chamber and then pass into the secondary combustion chamber. Secondary combustion air is added at the flame port and is mixed with the combustion gases in the mixing chamber. A secondary burner is provided in the mixing chamber to maintain adequate temperatures for complete combustion as the gases pass into and through the secondary combustion chamber.

Today, new multiple-chamber, excess-air incinerators are not widely installed for the destruction of hospital wastes for the following reasons. First, operating in the surface-combustion excess-air mode results in fly ash carryover which causes excessive particulate matter emissions. Second, operating with high levels of excess air can require high auxiliary fuel usage to maintain secondary combustion chamber

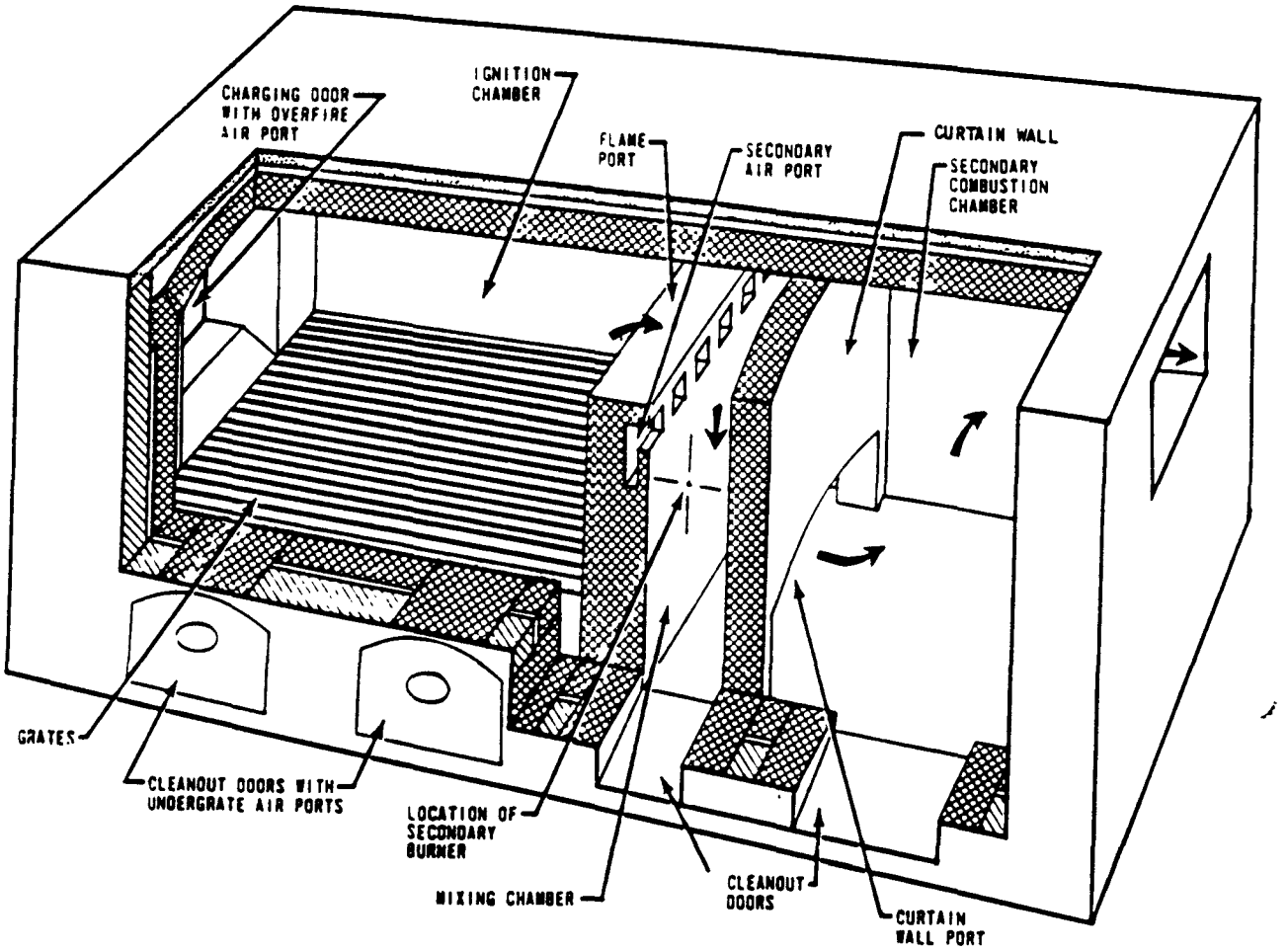

Figure 5-8. In-line excess air incinerator.[13]

temperatures. Third, use of manually adjusted natural draft combustion air dampers does not provide the level of control desirable for assuring complete combustion of the variable waste constituents found in hospital wastes, and good burnout can be more difficult to achieve.

Multiple-chamber incinerators frequently are designed and used specifically for incinerating pathological ("Type 4" anatomical) wastes. Pathological waste has a high moisture content and may contain liquids; consequently, a pathological waste incinerator always will be designed with a fixed hearth. A raised lip at the charging door often is designed into the hearth to prevent liquids from spilling out the door during charging. Because the heating value of pathological waste is low and is not sufficient to sustain combustion, the auxiliary burner(s) provided in the primary chamber of pathological incinerators are designed for continuous operation and with sufficient capacity to provide the total heat input required to complete combustion.

5.2.2.5 Rotary Kiln Incinerators.[14] Like other incinerator types, rotary kiln incineration consists of a primary chamber in which waste is heated and volatilized and a secondary chamber in which combustion of the volatile fraction is completed. In this case, however, the primary chamber consists of a horizontal, rotating kiln. The kiln is inclined slightly so that the waste material migrates from the waste charging end to the ash discharge end as the kiln rotates. The waste migration, or throughput, rate is controlled by the rate of rotation and the angle of incline, or rake, of the kiln. Air is injected into the primary chamber and mixes with the waste as it rotates through the kiln. A primary chamber burner is generally present both for heat-up purposes and to maintain desired temperatures. Figure 5-9 is a schematic of a rotary kiln with a mechanical auger feeder system.

Volatiles and combustion gases from the primary chamber pass to the secondary chamber where combustion is completed by the addition of air together with the high temperatures maintained by a secondary burner. Due to the turbulent motion of the waste in the lower primary chamber, particle entrainment in the flue gases is higher for rotary kiln incinerators than for controlled-air or excess air incinerators.

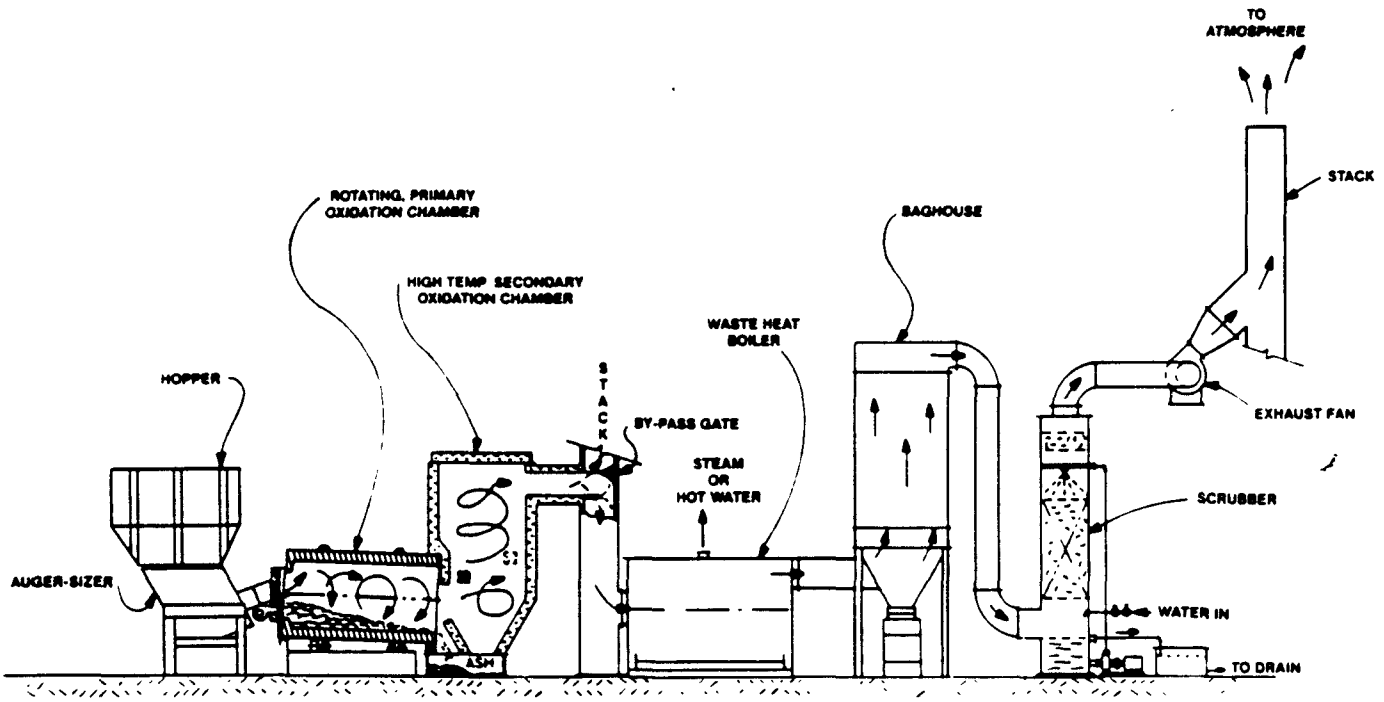

Figure 5-9. Drawing for rotary kiln incinerator.[15]

5.3 AIR POLLUTION CONTROL SYSTEMS

Add-on pollution control systems may be required to meet the air pollution limits of some States. Pollutants of concern include particulate matter, metals, toxic organics, acid gases and radionuclides.

The pollution control systems which might be used to control hospital waste incinerator emissions include wet scrubbers, dry scrubbers, and fabric filters. These systems are described briefly in the following subsections.

5.3.1 Wet Scrubbers

Venturi and packed-bed scrubbers are the most common types of wet scrubber systems used on hospital incinerators. Venturi scrubbers are used primarily for particulate matter control and packed-bed scrubbers are used primarily for acid gas control. However, both types of systems achieve some degree of control for both particulate matter and acid gases.

Most of the scrubber systems recently installed or currently being installed on hospital incinerators consist of a variable throat venturi followed by a packed-bed scrubber and mist eliminator. These systems operate at a constant pressure drop in the range of 20 to 40 inches of water column (in. w.c.), depending on performance or permit condition requirements. The variable throat venturi design accommodates varying gas flow rates while maintaining a constant pressure drop by changing the venturi throat area. A pH controller system, including a pH electrode and transmitter, adjusts the flow of a caustic solution (sodium hydroxide or sodium carbonate) to the scrubber system to accommodate varying acid gas concentrations and gas flow rates. Typical performance parameters for this system are summarized in Table 5-2.

Operation and maintenance problems associated with wet scrubbers include fan imbalance, nozzle wear or plugging, pump seal leaks, pH controller drifts, pH electrode fouling, and wet-dry interface buildup. Specific problems associated with HWI's stem from batch loading and nonsteady state combustion conditions that result in varying gas flow rates, gas temperatures, particle size distribution, particle concentration, and acid gas concentrations.

5.3.1.1 Venturi Scrubber Operating Principles. A venturi scrubber consists of a liquid sprayed upstream from a vessel containing converging

TABLE 5-2. WET SCRUBBER PERFORMANCE PARAMETERS
Hospital Waste Incinerators

Parameter	Typical range	Units of measure
Venturi scrubbers		
Pressure drop	20 to 50	in. w.c.
Liquid feed rate	>35	gal/min
Liquid to gas rate	7 to 10	gal/Macf
Liquid feed pressure	20 to 60	psi
Turbidity	1 to 10	Percent suspended solids
Gas flow rate	>5,000	acfm
Packed-bed scrubbers		
Pressure drop	1-3	in. w.c.
Liquid feed rate	>5	gal/min
Liquid feed pH	5.5 to 10	pH
Liquid to gas rate	1-6	gal/Macf
Liquid feed pressure	20 to 60	psi
Gas flow rate	>5,000	acfm

and diverging cross sectional areas as illustrated in Figure 5-10. The portion of the venturi that has the smallest cross sectional area and consequently the maximum gas velocity is commonly referred to as the throat. The throat can be circular as shown in Figure 5-10 or rectangular as shown in Figure 5-11. Liquid droplets serve as the particle collection media and can be created by two different methods. The most common method is to allow the shearing action of the high gas velocity in the throat to atomize the liquid in the droplets. The other method is to use spray nozzles to atomize the liquid by supplying high pressure liquid through small orifices.

Impaction is the primary means for collection of particles in venturi scrubbers. To attain high collection efficiency, venturi scrubbers need to achieve gas velocities in the throat in the range of 10,000 to 40,000 feet per minute. As the gas stream approaches the venturi throat, the gas velocity and turbulence increases. These high gas velocities atomize the water droplets and create the relative velocity differential between the gas and the droplets to effect particle-droplet collision. The effectiveness of a venturi scrubber is related to the square of the particle diameter and to the difference in velocities of the liquor droplets and the particles.

The performance of a venturi scrubber is strongly affected by the size distribution of the particulate matter. For particles greater than 1 to 2 μm in diameter, impaction is so effective that penetration (emissions) is quite low. However, penetration of smaller particles, such as the particles in the 0.1 to 0.5 μm range is very high. Unfortunately, hospital waste incinerators can generate substantial quantities of particulate matter in this submicron range. The small particle size distribution is typical for fuel combustion sources and results from the condensation of partially combusted organic compounds and the condensation of metallic vapors.

Collection efficiency in a venturi scrubber system increases as the static pressure drop increases. The static pressure drop is a measure of the total amount of energy used in the scrubber to accelerate the gas stream, to atomize the liquor droplets, and to overcome friction. The pressure drop across the venturi is a function of the gas velocity and

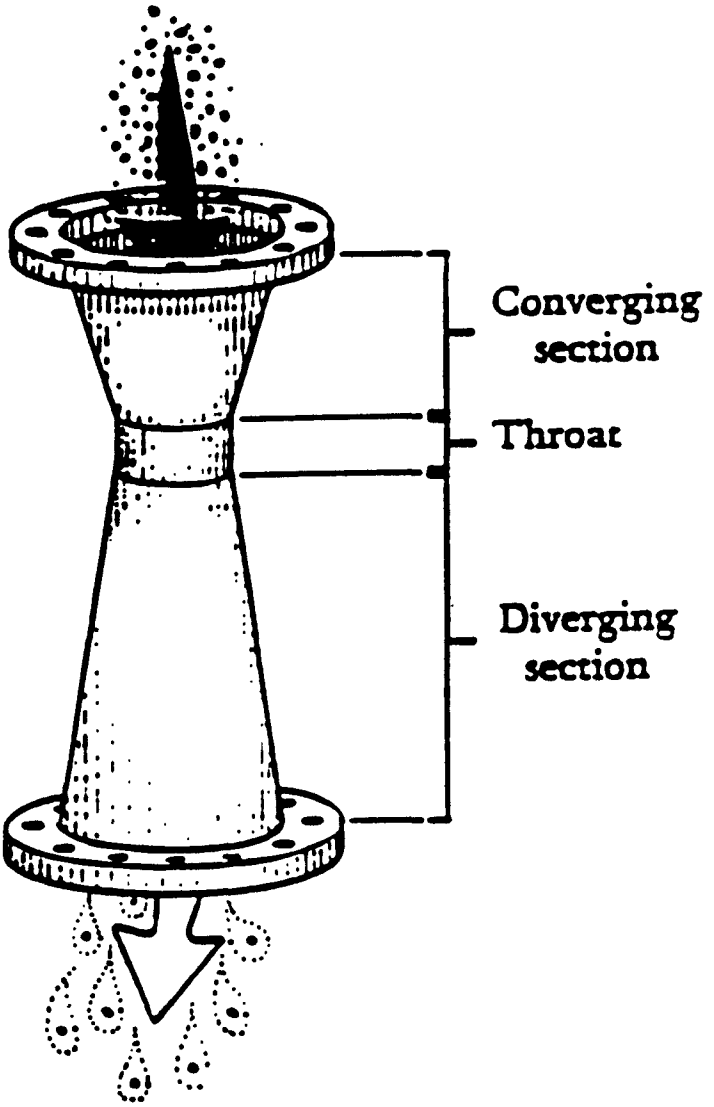

Figure 5-10. Venturi configuration.[16]

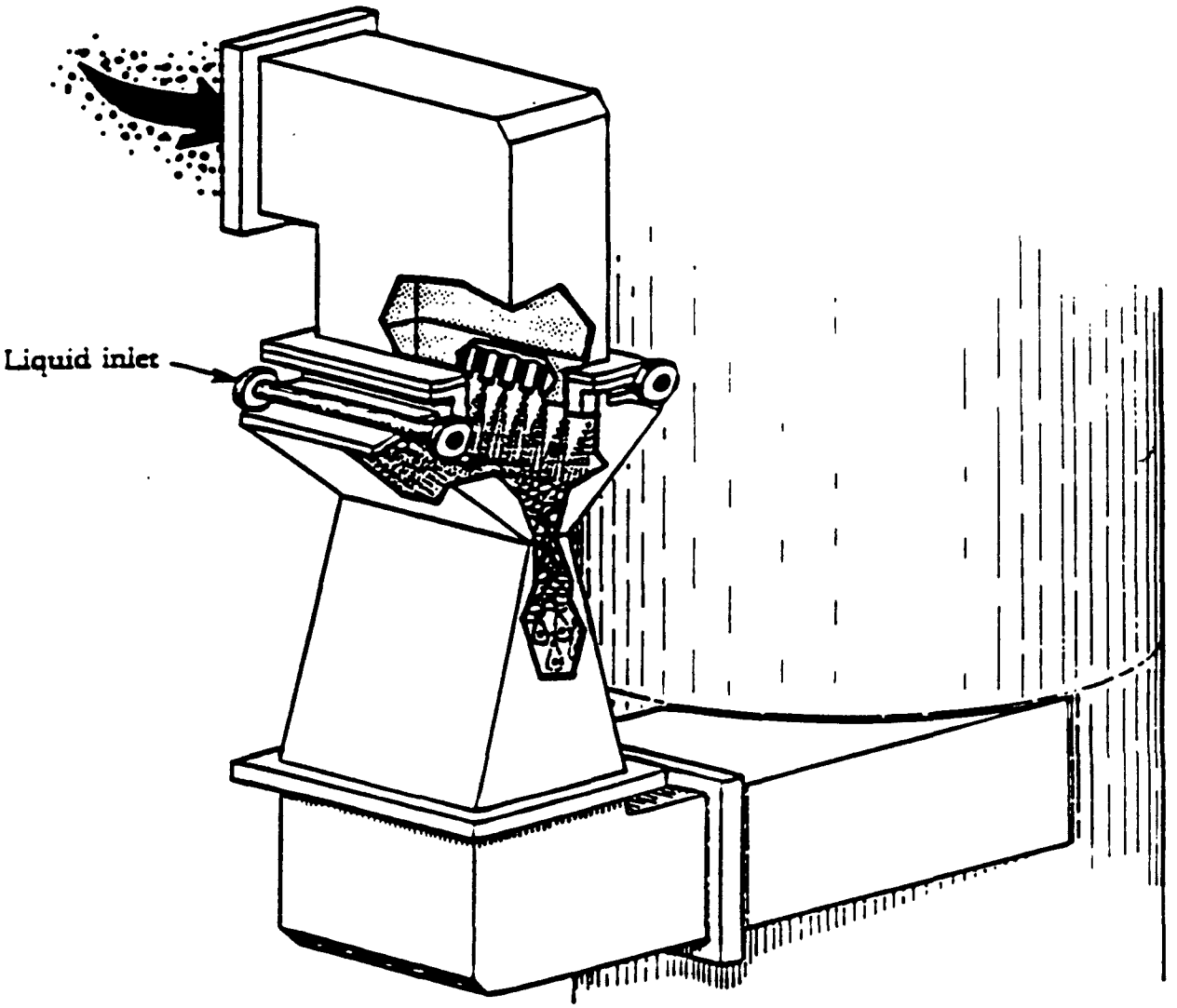

Figure 5-11. Spray venturi with rectangular throat.[17]

liquid/gas ratio and in practice acts as a surrogate measure for gas velocity.

Other variables that are important to venturi scrubber performance are the liquid surface tension and liquid turbidity. If surface tension is too high, some small particles which impact on the water droplet will "bounce" off and not be captured. High surface tension also has an adverse impact on droplet formation. High liquid turbidity, or high suspended solids content, will cause erosion and abrasion of the venturi section and ultimately lead to reduced performance of the system.

Most venturi scrubbers are designed to operate at liquid-to-gas (L/G) ratios between 7 and 10 gallons per thousand actual cubic feet (gal/Macf). At L/G ratios less than 3 gal/Macf, there is an inadequate liquid supply to completely cover the venturi throat. At the other extreme, L/G ratios above 10 gal/Macf are seldom justified because they do not increase performance but do increase operating costs.

A list of the major components of commercial scrubber systems is provided below.

1. Venturi section;
2. Spray nozzles;
3. Liquor treatment equipment;
4. Gas stream demister;
5. Liquor recirculation tanks, pumps, and piping
6. Alkaline addition equipment;
7. Fans, dampers, and bypass stacks; and
8. Controllers for venturi throat area, caustic feed, make up water, and emergency water quench for temperature excursions.

5.3.1.2 Venturi Scrubber Operating Problems. A problem can be caused by the adjustable throat being opened too far, and the result is a reduction in pressure drop. Reduced pressure drop levels can also be caused by a loss or reduction in the scrubber liquid supply. The liquid flow rate will drop when there is pluggage in the nozzles, pipes, or flowmeters, causing the pressure drop to decrease and the gas flow rate to increase. Pump failure, or cavitation of a pump due to a low liquid level in the recirculation tank, can also be responsible for a loss or reduction in the liquid supply. These problems are identifiable from routine record keeping and inspection, and can be readily resolved by maintenance.

The venturi throat can be damaged by erosion or abrasion caused by a high level of suspended solids in the recirculated scrubbing liquid. Reducing the suspended solids by increasing the blowdown (water makeup) rate in the system will help solve erosion problems.

Another common problem with venturi scrubbers is a solids buildup at the wet-dry interface. The wet-dry interface is the transition region where the gas stream changes from an unsaturated to a saturated condition. As the hot gas stream comes into contact with the scrubbing liquid and becomes cooled and saturated, there is a tendency for the suspended particulate to accumulate on the walls. Scrubber design can help reduce this solids buildup, but gradual accumulation of deposits will occur. Routine maintenance to remove this buildup is typically the only solution. Sometimes a reduction in the suspended solids content will reduce the rate of the buildup, but routine maintenance will still be required at less frequent intervals.

5.3.1.3 Packed-Bed Scrubber Operating Principles. A packed-bed scrubber generally is used for acid gas removal. The large liquor surface area created as the liquor gradually passes over the packing material favors gas diffusion and absorption. Packed-bed scrubbers are not effective as stand-alone scrubbers for collection of fine particulate matter (less than 2.5 μm) since the gas velocity through the bed(s) is relatively low. However, packed beds are effective for the removal of particle-laden droplets or charged particles when used as a downstream collector behind a venturi or electrostatically-enhanced wet scrubber.

Packed beds can be either vertical or horizontal. Figure 5-12 illustrates a vertically oriented scrubber. Regardless of the orientation of the bed, the liquor is sprayed from the top and flows downward through the bed. Proper liquor distribution is important for efficient removal of gases.

Absorption is the primary means of collection of acid gases in packed-bed scrubbers. The effectiveness of absorption in packed beds is related to the uniformity of the gas velocity distribution, the surface area of the packing material, the amount and uniform distribution of scrubber liquid, and the pH and turbidity of the scrubbing liquid.

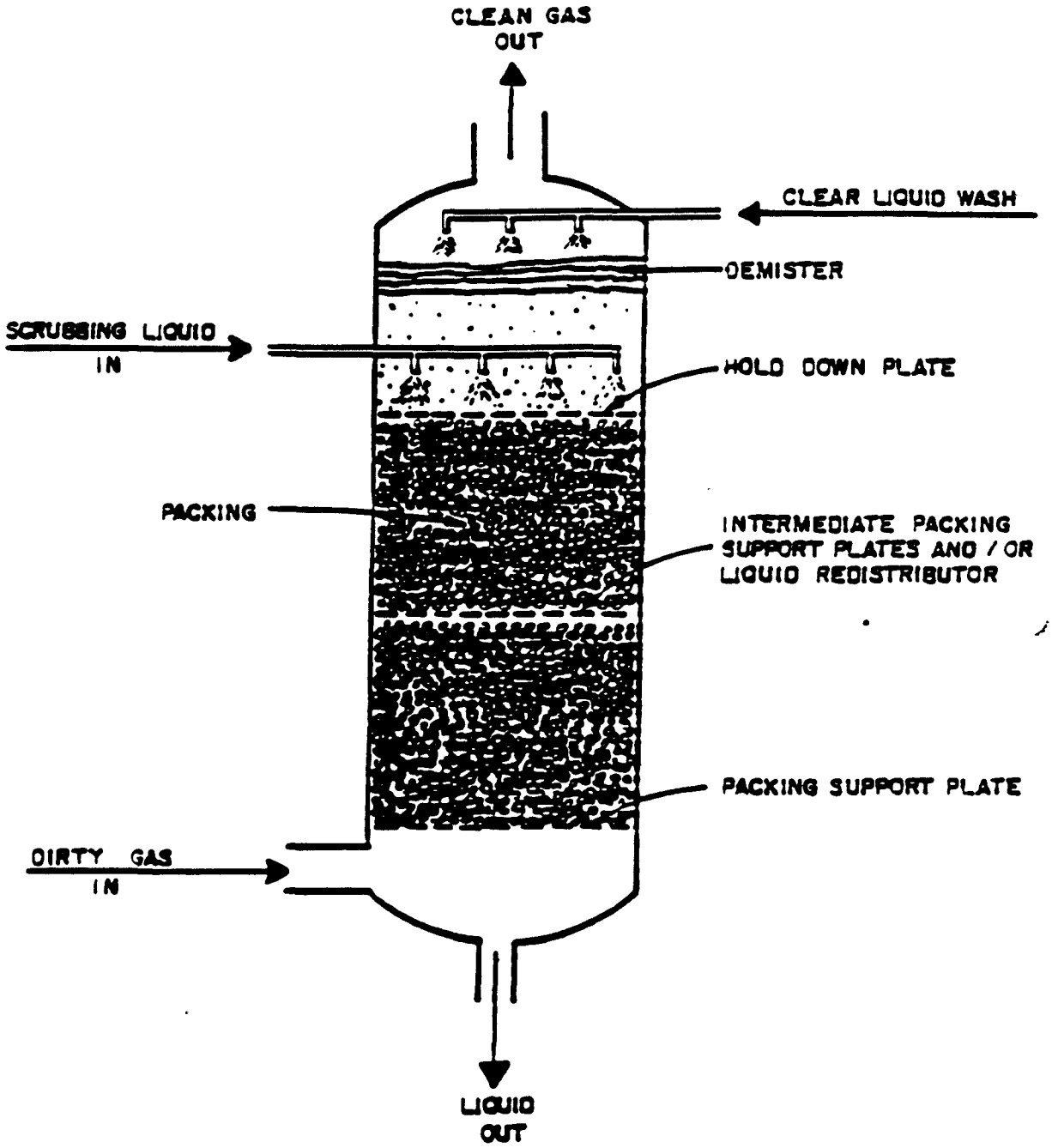

Figure 5-12. Vertically oriented packed-bed scrubber.

Gas absorption is effected by the extensive liquid surface contacted by the gas stream as the liquid flows downward over the packing material. A variety of available packing materials offer a large exposed surface area to facilitate contact with and absorption of acid gases. The packing materials range in size from 0.5 to 3 in. and are randomly oriented in the bed.

Typically, sodium hydroxide (NaOH) or occasionally sodium carbonate (Na_2CO_3) is used with water to neutralize the absorbed acid gases in a packed-bed scrubber. These two soluble alkali materials are preferred because they minimize the possibility of scale formation in the nozzles, pump, and piping. For the typical system using NaOH as the neutralizing agent, the HCl and SO_2 collected in the scrubber react with NaOH to produce sodium chloride (NaCl) and sodium sulfite (Na_2SO_3) in an aqueous solution.

One of the major problems with these scrubbers is the accumulation of solids at the entry to the bed and within the bed. The dissolved and suspended solids levels in the liquor must be monitored carefully to maintain performance.

5.3.1.4 Packed Bed Operating Problems. One common problem is partial or complete pluggage of the bed due to deposition of the collected solids and/or precipitation of solids formed by reaction of the neutralizing agent with acid gases. Another problem is settling of the packing material which leaves an opening at the top of the packed section. Both of these situations reduce the performance of the scrubber by disturbing the uniform flow of the liquid and gas streams.

Another common problem occurs when the pH of the scrubbing liquid routinely falls outside the normal range of 5.5 to 10. Corrosion and erosion of the packed bed vessel, ducting, and piping can occur when the scrubber liquid is not in the range for which the system was designed.

5.3.2 Dry Scrubbers

Dry scrubbers utilize absorption and adsorption for the removal of sulfur dioxide, hydrogen chloride, hydrogen fluoride, and other acid gases. Some adsorption of vapor state organic compounds and metallic compounds also occurs in some dry scrubber applications. This relatively new control technology is presently in use on pulverized coal-fired

boilers and municipal waste incinerators. Dry scrubbers are anticipated to be used on some large hospital waste incinerators in the near future. Because there are no current dry scrubber applications on hospital waste incinerators, information available on municipal waste incinerators will be transferred and presented in this report. Much of the presently available information applicable to municipal waste incinerators has been drawn from European installations operating for the last 3 to 5 years and U.S. installations operating for the last 1 to 2 years. Changes and refinements in municipal and hospital waste incinerator dry scrubbers should be anticipated as more experience with these systems is gained.

5.3.2.1 Components and Operating Principles of Dry Scrubber Systems. There is considerable diversity in the variety of processes which are collectively termed dry scrubbing. This is partially because the technology is relatively new and is still evolving. The diversity also exists because of the differing control requirements. For purposes of this field inspection manual, the various dry scrubbing techniques have been grouped into three major categories: (1) spray dryer absorbers, (2) dry injection adsorption systems, and (3) combination spray dryer and dry injection systems. Specific types of dry scrubbing processes within each group are listed below. Alternative terms for these categories used in some publications are shown in parentheses.

1. Spray dryer absorption (semiwet)
   - Rotary atomizer spray dryer systems
   - Air atomizing nozzle spray dryer systems
2. Dry injection adsorption (dry)
   - Dry injection without recycle
   - Dry injection with recycle (sometimes termed circulating fluid bed adsorption)
3. Combination spray dryer and dry injection (semiwet/dry)

Simplified block diagrams of the three major types of dry scrubbing systems are presented in Figures 5-13, 5-14, and 5-15. The main differences between the various systems are the physical form of the alkaline reagent and the design of the vessel used for contacting the acid gas laden stream. The alkaline feed requirements are much higher for the dry injection adsorption than the other two categories. Conversely, the spray

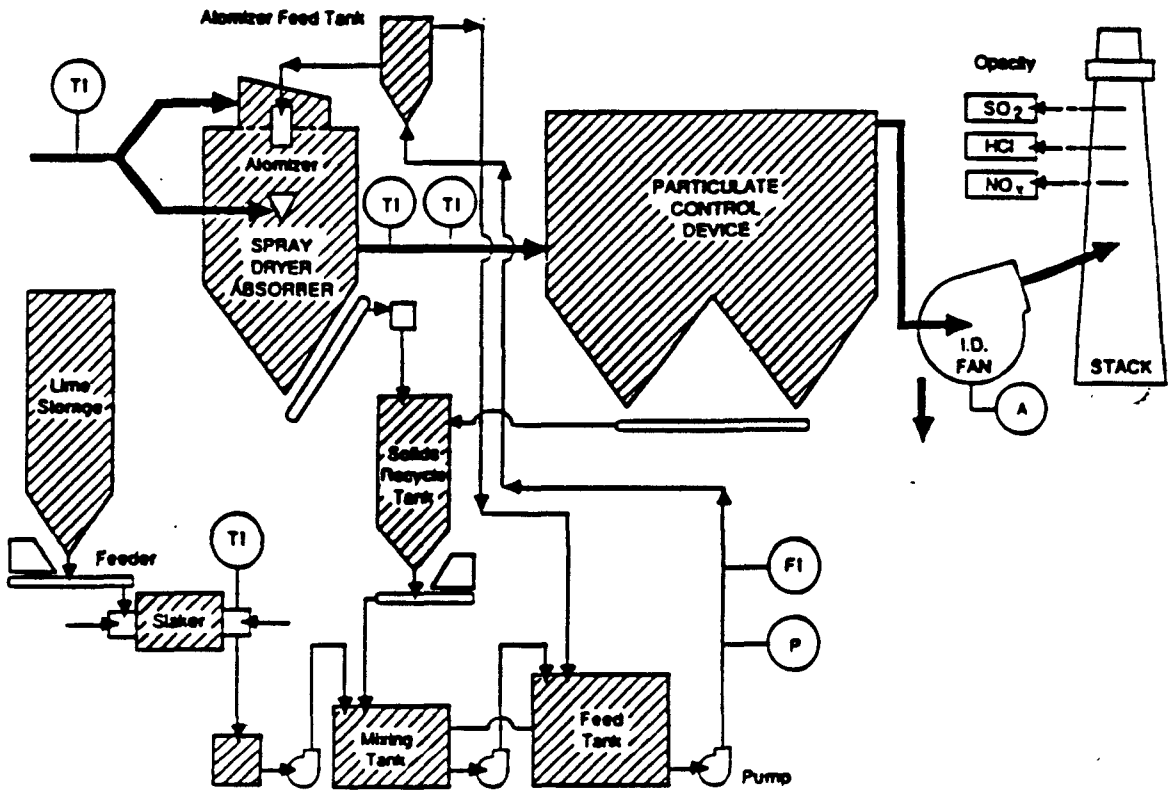

Figure 5-13. Components of a spray dryer absorber system (semiwet process).

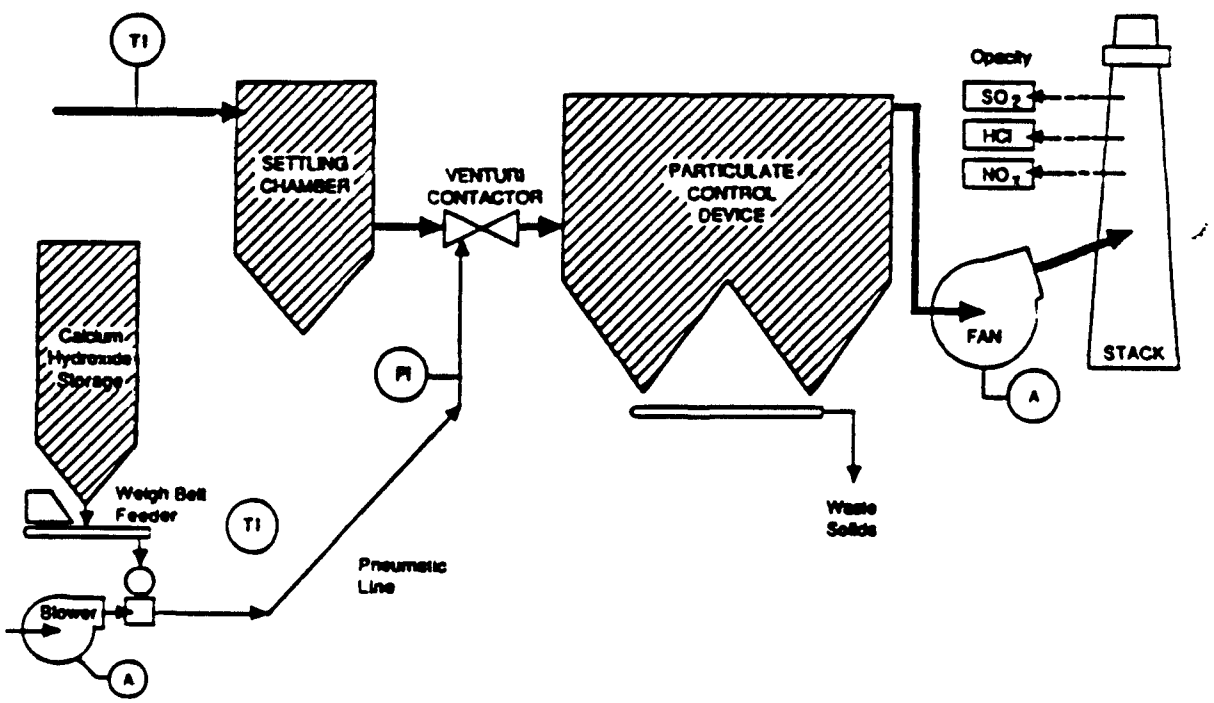

Figure 5-14. Components of a dry injection absorption system (dry process).

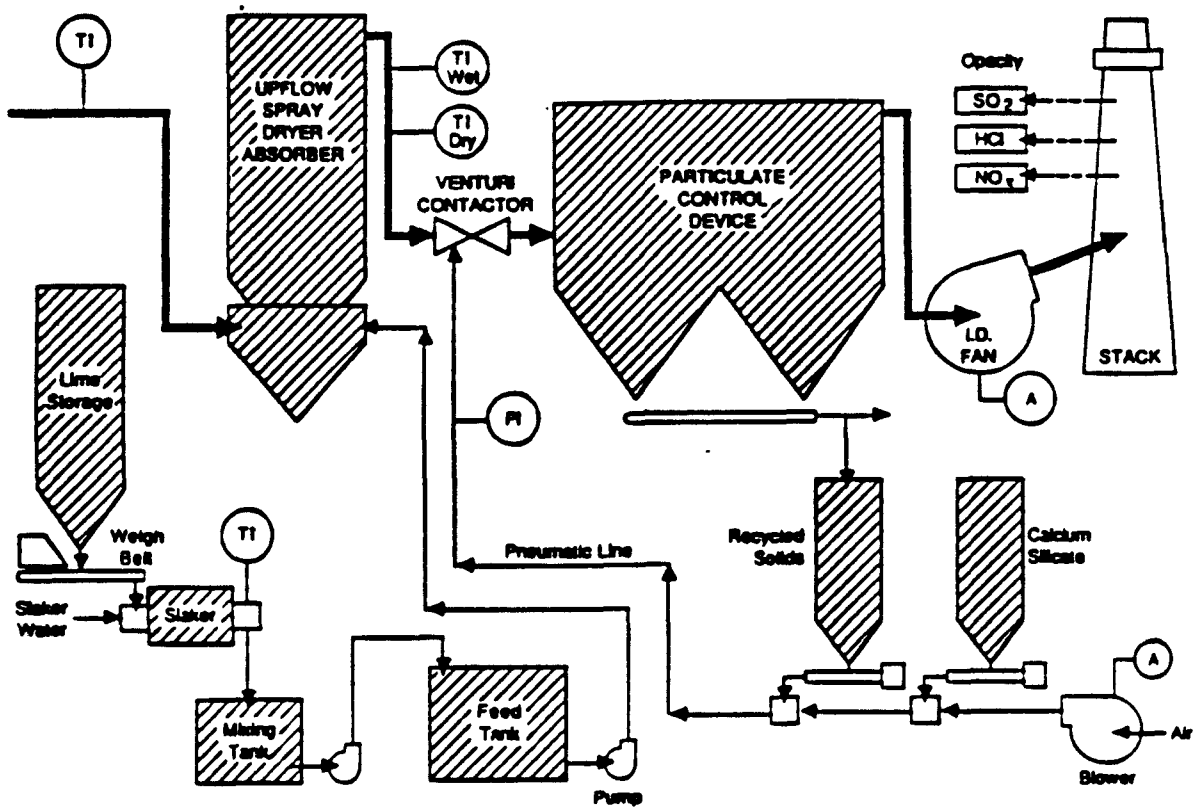

Figure 5-15. Components of a combination spray dryer and dry injection absorption system (semiwet/dry process).

dryer absorption and combination systems are much more complicated. It should be noted that the particulate control devices shown on the right hand side of the figures are generally fabric filters or electrostatic precipitators. It also is possible that one and two stage wet scrubbing systems will be used in certain cases.

The pollutant removal efficiencies for all three categories of dry scrubbing systems appear to be very high. In most cases, outlet gas stream continuous monitors provide a direct indication of the system performance.

5.3.2.1.1 Spray dryer absorbers. In this type of dry scrubbing system, the alkaline reagent is prepared as a slurry containing 5 to 20 percent by weight solids.[20-22] This slurry is atomized in a large absorber vessel having a residence time of 6 to 20 seconds.[23,24]

There are two main ways of atomization: (1) rotary atomizers and (2) air atomizing nozzles. There is generally only one rotary atomizer. However, a few applications have as many as three rotary atomizers.

The shape of the scrubber vessel must be different for the two types of atomizers to take into account the differences in the slurry spray pattern and the time required for droplet evaporation. The length-to-diameter ratio for rotary atomizers is much smaller than that for absorber vessels using air atomizing nozzles.

It is important that all of the slurry droplets evaporate to dryness prior to approaching the absorber vessel side walls and prior to exiting the absorber with the gas stream. Accumulations of material on the side walls or at the bottom of the absorber would necessitate an outage since these deposits would further impede drying. Proper drying of the slurry is achieved by the generation of small slurry droplets, by proper flue gas contact, and by use of moderately hot flue gases.

Drying that is too rapid can reduce pollutant collection efficiency since the primary removal mechanism is absorption into the droplets. There must be sufficient contact time for the absorption. For this reason, spray dryer absorbers are operated with exit gas temperatures 90° to 180°F above the saturation temperature.[25-27] The absorber exit gas temperatures are monitored to ensure proper approach-to-saturation which is simply the difference between the wet bulb and dry bulb temperature monitors at the outlet of the absorber vessel.

In rotary atomizers, a thin film of slurry is fed to the top of the atomizer disk as it rotates at speeds of 10,000 to 17,000 revolutions per minute. These atomizers generate very small slurry droplets having diameters in the range of 100 microns. The spray pattern is inherently broad due to the geometry of the disk.

High pressure air is used to provide the physical energy required for droplet formation in nozzle type atomizers. The typical air pressures are 70 to 90 psig. Slurry droplets in the range of 70 to 200 microns are generated. This type of atomizer generally can operate over wider variations of the gas flow rate than can be used in a rotary atomizer. However, the nozzle atomizer does not have the slurry feed turndown capability of the rotary atomizer. For these reasons, different approaches must be taken when operating at varying system loads.

The alkaline material generally purchased for use in a spray dryer absorber is pebble lime. This material must be slaked in order to prepare a reactive slurry for absorption of acid gases. Slaking is the addition of water to convert calcium oxide to calcium hydroxide. Proper slaking conditions are important to ensure that the resulting calcium hydroxide slurry has the proper particle size distribution and that no coating of the particles has occurred due to the precipitation of contaminants in the slaking water.

Some of the important operating parameters of the lime slaker are the quality of the slaking water, the feed rate of lime, and the slurry exit temperature. However, it is difficult to relate present operating conditions or shifts from baseline operating conditions to possible changes in the absorption characteristics of the dry scrubber system. A variety of subtle changes in the slaker can affect the reactivity of the liquor produced.

One of the problems which has been reported for spray dryer absorber type systems is the pluggage of the slurry feed line to the atomizer. Scaling of the line can be severe due to the very high pH of this liquor. The flow rate of the liquor to the atomizer is usually monitored by a magnetic flow meter. However, this instrument also is vulnerable to scaling since the flow sensing elements are on the inside surface of the pipe. To minimize the pluggage problems, the lines must be well sloped

and include the capability for flushing of the lines immediately after outages. Also, there should not be abrupt line changes, sharp bends, or adjacent high temperature equipment. During the inspection, it is essentially impossible to identify emerging slurry line problems.

Recycle of the solids collected in the absorber vessel is important in most systems. It increases the solids content of the slurry feed to the atomizer and thereby improves the drying of the droplets. Recycle also maximizes reagent utilization. The rate of solids recycle is monitored on a continuous basis. The rest of the spent absorbent typically is sent to a landfill.

5.3.2.1.2 Dry injection adsorption systems. This type of dry scrubber uses finely divided calcium hydroxide for the adsorption of acid gases. The reagent feed has particle sizes which are 90 percent by weight through 325 mesh screens.[28] This is approximately the consistency of talcum powder. This size is important to ensure that there is adequate calcium hydroxide surface area for high efficiency pollutant removal.

Proper particle sizes are maintained by transporting the lime to the dry scrubber system by means of a positive pressure pneumatic conveyor. This pneumatic conveyor provides the initial fluidization necessary to break up any clumps of reagent which have formed during storage. The air flow rate in the pneumatic conveyor is kept at a constant level regardless of system load in order to ensure proper particle sizes.

Fluidization is completed when the calcium hydroxide is injected countercurrently into the gas stream. A venturi section is used for the contactor due to the turbulent action available for mixing the gas stream and reagent. The gas stream containing the entrained calcium hydroxide particles and fly ash is then vented to a fabric filter.

Adsorption of acid gases and organic compounds (if present) occurs primarily while the gas stream passes through the dust cake (composed of calcium hydroxide and fly ash) on the surface of the filter bags. Pollutant removal efficiency is dependent on the reagent particle size range, on the adequacy of dust cake formation, and on the quantity of reagent injected.

The calcium hydroxide feed rate for dry injection systems is three to four times the stoichiometric quantities needed.[29,30] This is much higher

than the spray dryer absorber type systems and it makes this approach unattractive for very large systems.

In one version of the dry injection system, solids are recycled from the particulate control device back into the flue gas contactor (sometimes termed reactor). The primary purpose of the recycle stream is to increase reagent utilization and thereby reduce overall calcium hydroxide costs.

5.3.2.1.3 Combination spray dryer and dry injection systems. A flowchart for this system is provided in Figure 5-15. The acid gas laden flue gas is first treated in an upflow type spray dryer absorber. A series of calcium hydroxide sprays near the bottom of the absorber vessel are used for droplet generation.

After the upflow chamber, the partially treated flue gas then passes through a venturi contactor section where it is exposed to a calcium silicate and lime suspension. The purpose of the second reagent material is to improve the dust cake characteristics in the downstream fabric filter and to optimize acid gas removal in this dust cake. The calcium silicate reportedly improves dust cake porosity and serves as an adsorbent for the acid gases.

Solids collected in the fabric filter may be recycled to the venturi contactor. This improves reagent utilization and facilitates additional pollutant removal.

5.3.2.2 General Comments. Corrosion can present major problems for all types of dry scrubbers used on applications with high hydrogen chloride concentrations such as hospital waste incinerators. The calcium chloride reaction product formed in the dry scrubbers and any unreacted hydrogen chloride are both very corrosive and cause damage in any areas of the absorber vessel or particulate control device where cooling and water vapor condensation can occur. Two common reasons for low localized gas temperatures include air infiltration and improper insulation around support beams. Due to the potential problems related to corrosion, the inspections should include checks for air infiltration and a visible evaluation of common corrosion sites.

5.3.3 Fabric Filters

Fabric filters are used on a limited number of hospital incinerators for control of particulate matter emissions. They have some advantages over wet scrubbers in that they are highly efficient at removing fine particles if they are properly operated and maintained. However, their performance can deteriorate rapidly in situations where poor O&M result in bag blinding, bag corrosion, or bag erosion.

Generally, fabric filters are classified by the type of cleaning mechanism that is used to remove the dust from the bags. The three types of units are mechanical shakers, reverse air, and pulse jet. To date, the only hospital incinerators that have been identified as having fabric filters use pulse jet units. The paragraphs below briefly describe the design and operating characteristics of pulse jet filters and identify key design parameters.

A schematic of a pulse jet fabric filter is shown in Figure 5-16. Bags in the fabric filter compartment are supported internally by rings or cages. Bags are held firmly in place at the top by clasps and have an enclosed bottom (usually a metal cap). Dust-laden gas is filtered through the bag, depositing dust on the outside surface of the bag (an exterior filtration system). The fabric filter is divided into a "clean" side and "dirty" side by the tube sheet which is mounted near the top of the unit. The dust-laden gas stream enters below this tube sheet and the filtered gas collects in a plenum above the tube sheet. There are holes in the tube sheet for each of the bags. The bags are normally arranged in rows. The bags and cages hang from the tube sheet. Most pulse jet filters use bag tubes that are 4 to 6 in. in diameter. Typically the bags are 10 to 12 ft long, but they can be as long as 25 ft.

There are two major types of pulse jet fabric filters: (1) top access, and (2) side access. Figure 5-17 illustrates the top access design which includes a number of large hatches across the top of the fabric filter for bag replacement and maintenance. Another major type has one large hatch on the side for access to the bags. The side access units often have a single small hatch on the top of the shell for routine inspection of the fabric filter.

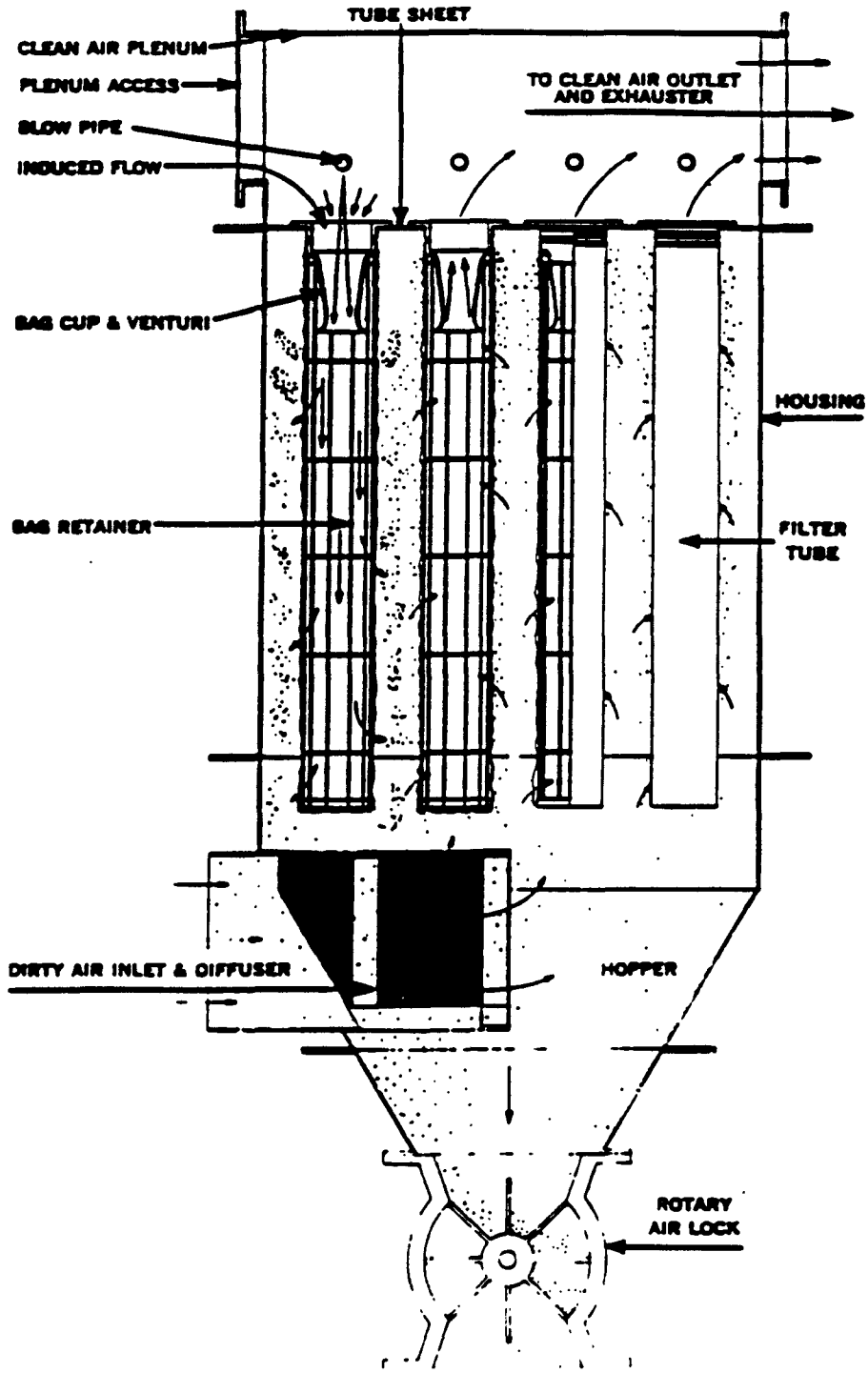

Figure 5-16. Schematic of pulse jet baghouse.[29]

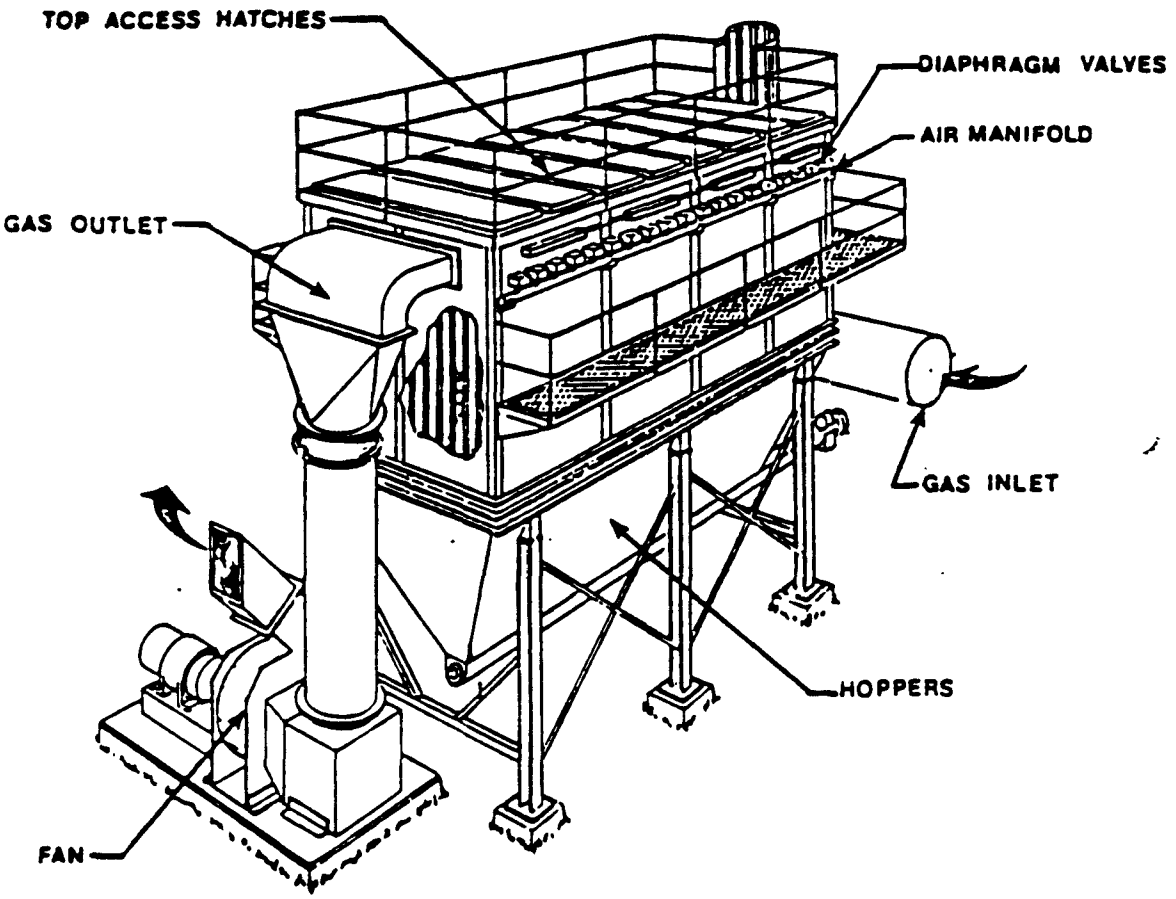

Figure 5-17. Top access pulse jet fabric filter.

Like most small units, the pulse jet collector depicted in Figure 5-17 is not divided into compartments. These are not needed on small units that operate intermittently since bags are cleaned row-by-row as the unit continues to operate. A few of the large units are divided into separate compartments so that it is possible to perform maintenance work on part of the unit while the other part continues to operate.

Pulse jet cleaning is used for cleaning bags in an exterior filtration system. The dust cake is removed from the bag by a blast of compressed air injected into the top of the bag tube. The blast of compressed air stops the normal flow of air through the filter. The air blast develops into a standing or shock wave that causes the bag to flex or expand as the shock wave travels down the bag tube. As the bag flexes, the cake fractures and deposited particles are discharged from the bag. The shock wave travels down and back up the tube in approximately 0.5 seconds. The compressed air is generated by an air compressor and stored temporarily in the compressed air manifold. When the pilot valve (a standard solenoid valve) is opened by the controller, the diaphragm valve suddenly opens to let compressed air into the delivery tube which serves a row of bags. There are holes in the delivery tube above each bag for injection of the compressed air into the top of each bag. The cleaning system controller can either operate on the basis of a differential pressure sensor as shown in Figure 5-18, or it can simply operate as a timer. In either case, bags are usually cleaned from once every 5 minutes to once every hour. Cleaning is usually done by starting with the first row of bags and proceeding through the remaining rows in the order that they are mounted.

The blast of compressed air must be strong enough for the shock wave to travel the length of the bag and shatter or crack the dust cake. Pulse jet units use air supplies from a common header which feeds into a nozzle located above each bag. In most fabric filter designs, a venturi sealed at the top of each bag is used to create a large enough pulse to travel down and up the bag. The pressures involved are commonly between 60 and 100 psig. The importance of the venturi is being questioned by some pulse jet fabric filter vendors. Some fabric filters operate with only the compressed air manifold above each bag.

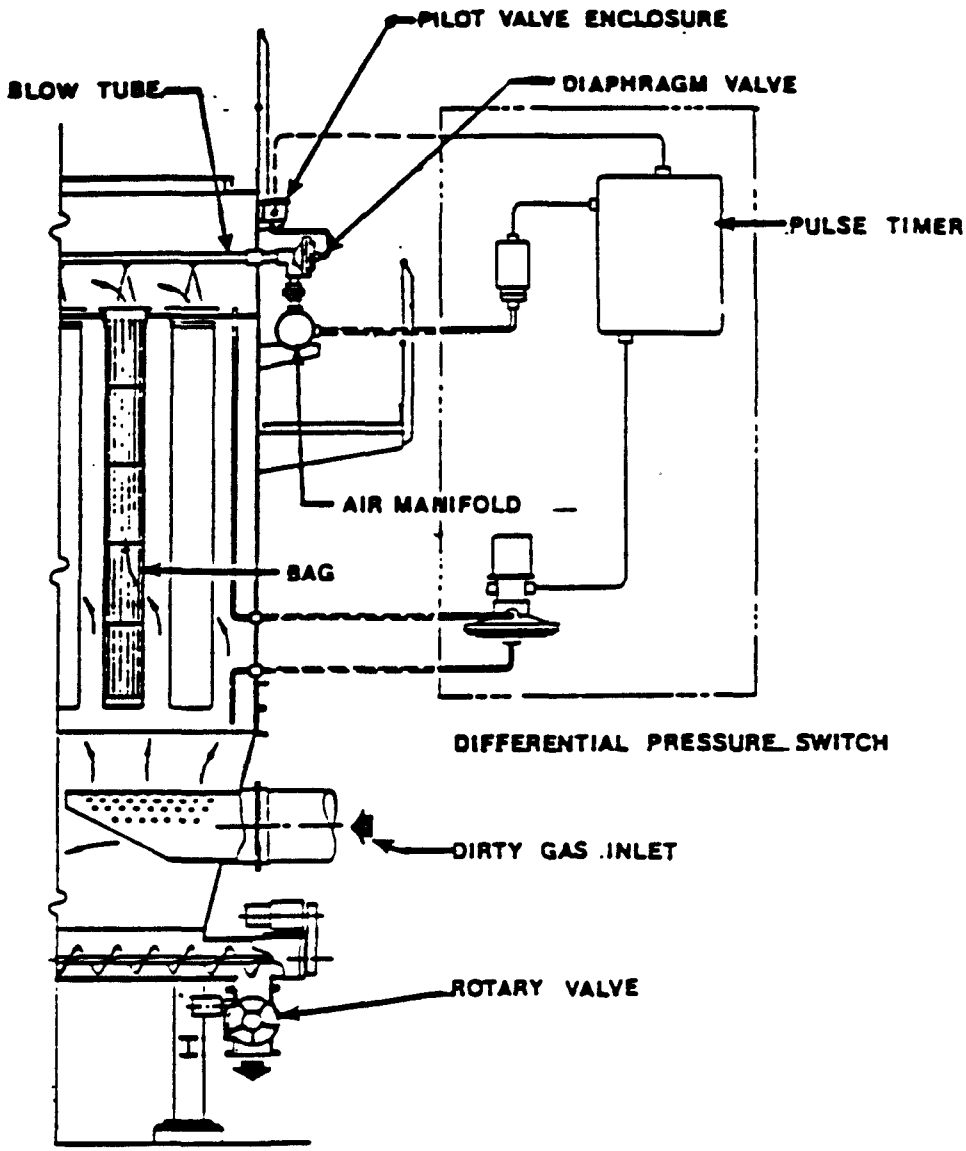

Figure 5-18. Cross sectional sketch of pulse jet fabric filter.

The presence of a row of diaphragm valves along the top of the fabric filter indicates that the fabric filter is a pulse jet unit. These valves control the compressed airflow into each row of bags which is used to routinely clean the dust from the bags. On a few units, the diaphragm valves cannot be seen since they are in an enclosed compartment on the top of the unit. In these cases, the pulse jet fabric filter can be recognized by the distinctive, regularly occurring sound of the operating diaphragm valves.

The key design and operating parameters for a pulse jet filter are the air-to-cloth ratio (or the filtration velocity), the bag material, operating temperature, and operating pressure drop.

The air-to-cloth ratio is actually a measure of the superficial gas velocity through the filter medium. It is a ratio of the flow rate of gas through the fabric filter (at actual conditions) to the area of the bags and is usually measured in units of $acfm/ft^2$. No operating data were obtained for hospital incinerators, but generally, the air-to-cloth ratio on waste combustion units is in the range of 5 to 10 $acfm/ft^2$ of bag area.[31]

Pulse jet units do not necessarily operate at the design average gas-to-cloth ratio. When incinerator operating rates are low, the prevailing average gas-to-cloth ratio could be substantially below the design value. Conversely, the average gas-to-cloth ratio could be well above the design value if some of the bags are inadequately cleaned or if sticky or wet material blocks part of the fabric surface. Very high gas-to-cloth ratio conditions can lead to high gas flow resistance which, in turn, can result in both seepage of dust through the bags and fugitive emissions from the incinerator or upstream dry scrubber.

Bag material generally is based on prior experience of the vendor. Key factors that generally are considered are cleaning method, abrasiveness of the particulate matter and abrasion resistance of the material, expected operating temperature, potential chemical degradation problems, and cost. To date, no information has been obtained on types of material typically used for hospital incinerator applications.

The operating temperature of the fabric filter is of critical importance. Since the exhaust gas from hospital incinerators can contain

HCl, the unit should be operated at sufficiently high temperatures to assure that no surfaces drop below the acid dewpoint. Otherwise, condensation of HCl will result in corrosion of the housing or bags. The boiling point of HCl (aqueous hydrochloric acid) is 110°C (230°F); gas temperatures should be maintained at 150°C (300°F) to ensure that no surfaces are cooled below the dewpoint. Above a maximum temperature that is dependent on filter type, bags will degrade or in some cases fail completely. Gas temperatures should be kept safely below the allowed maximum.

Pressure drop in fabric filters generally is maintained within a narrow range. (For pulse jet filters the upper end of the range typically is 8 to 10 in. w.c.). Pressure drops below the minimum indicate that either: (1) leaks have developed, or (2) excessive cleaning is removing the base cake from the bags. Either phenomona results in reduced performance. Pressure drops greater than the maximum indicate that either (1) bags are "blinding," or (b) excessive cake is building on the bags because of insufficient cleaning. The primary result of excessive pressure drop is reduced flow through the system and positive pressure at the incinerator. Over time, operating at high pressure drops also lead to bag erosion and degradation.

5.3.4 Electrostatic Precipitators

A discussion on electrostatic precipitators was not included in this inspection manual because, currently, they are not used to control emissions from hospital waste incinerators. In general, ESP's are used to control emissions from larger sources such as municipal waste incinerators. Information on the application of ESP's to municipal incinerators may be found in Reference 21.

5.4 REFERENCES FOR CHAPTER 5

1. Doucet, L. C. Controlled Air Incineration: Design, Procurement and Operational Considerations. Prepared for the American Society of Hospital Engineering, Technical Document No. 55872. January 1986.

2. Ontario Ministry of the Environment. Incinerator Design and Operating Criteria, Volume II-Biomedical Waste Incineration. October 1986.

3. Reference 1, p. 1.

4. Ecolaire Combustion Products, Inc., Technical Article: "Principles of Controlled Air Incineration."

5. Reference 1.

6. McRee, R. "Operation and Maintenance of Controlled Air Incinerators."

7. Air Pollution Control District of Los Angeles County. Air Pollution Engineering Manual, AP-40. U.S. EPA. May 1973.

8. Ecolaire Combustion Products, Inc., Technical Data Sheet for E Series Incinerator.

9. Consumat Systems, Inc. Technical Data Sheet for Consumat Waste Handling System.

10. Ashworth R. Batch Incinerators--Count Them In; Thermal Paper Prepared for the National Symposium of Infectious Waste. Washington, D.C. May 1988.

11. Ecolaire Combustion Products, Inc. Technical Sheet for the ECP System.

12. Reference 7, p. 490.

13. Reference 7, p. 439.

14. Hospital Waste Combustion Study: Data Gathering Phase. Final Report. U. S. Environmental Protection Agency, Office of Air Quality Planning and Standards, Research Triangle Park, North Carolina. EPA 450/3-88-017. December 1988.

15. Technical Data Form: Consertherm Systems, Industronics, Inc.

16. Joseph, J. G. and D. S. Beachler. APTI Course SI:412C, Wet Scrubber Plan Review - Self-Instructional Guidebook. U. S. Environmental Protection Agency. EPA 450/2-82-020. March 1984.

17. Ibid. p. 3-4.

18. Donnelly, J. R., Quach, M. T., and Moller, J. T. "Design Considerations for Resource Recovery Spray Dryer Absorption Systems." Presented at the 79th Annual Meeting of the Air Pollution Control Association, Minneapolis, Minnesota. June 1986.

19. Ferguson, W. G., Jr., Borio, D. C., and Bump, D. L. "Equipment Design Considerations for the Control of Emissions From Waste-to-Energy Facilities." Presented at the 79th Annual Meeting of the Air Pollution Control Association, Minneapolis, Minnesota. June 1986.

20. Sedman, C. B., and Brna, T. G. "Municipal Waste Combustion Study Flue Gas Cleaning Technology. U. S. Environmental Protection Agency. Publication No. 530-SW-87-021d. June 1987.

21. Reference 19.

22. Reference 20.

23. Reference 19.

24. Moller, J. T., and Christiansen, O. B. "Dry Scrubbing of MSW Incinerator Flue Gas by Spray Dryer Absorption: New Developments in Europe." Presented at the 78th Annual Meeting of the Air Pollution Control Association, Detroit, Michigan. June 1985.

25. Foster, J. T., Hochhauser, M. L., Petti, V. J., Sandell, M. A., and Porter, T. J. "Design and Startup of a Dry Scrubbing System for Solid Particulate and Acid Gas Control on a Municipal Refuse-Fired Incinerator." Presented at the Air Pollution Control Association Specialty Conference on Thermal Treatment of Municipal, Industrial, and Hospital Wastes. Pittsburgh, Pennsylvania. November 4-6, 1987.

26. Ibid.

27. Reference 25.

28. Reference 26.

29. PEI Associates, Inc. Operation and Maintenance Manual for Fabric Filters. U. S. Environmental Protection Agency, Air and Energy Engineering Research Laboratory, Research Triangle Park, North Carolina. June 1986. EPA 625/1-86-020. p. 2-14.

30. Reference 20, p. 2-17.

6.0 BASELINE INSPECTION PROCEDURES FOR HOSPITAL INCINERATORS

The primary objective of control agency inspections is to minimize air pollution through promoting adherence to promulgated emission regulations and permit stipulations. The inspection provides data for determining the compliance status, helps identify sources of violation, and provides information indicating the underlying causes of excess emissions. The latter can be used in detailed negotiations with the operators or in support of enforcement actions. The inspection also provides a stimulus to the regulated industry by demonstrating the control agency's determination to ensure continuous compliance. The baseline inspection technique has been developed by EPA's Stationary Source Compliance Division to aid both EPA Regional Offices and other control agencies in conducting effective and complete inspections of air pollution control systems.

The primary purpose of this chapter is to describe the baseline inspection technique and illustrate how it should be applied to hospital incinerators and control devices. In the part of the chapter devoted to the baseline technique, a methodical approach is presented so that inspectors can obtain all the relevant data in an organized fashion. These procedures are organized into "levels of inspection" (see Section 6.2) reflecting the fact that there are different degrees of intensity necessary for different situations. The inspection procedures described in Sections 6.3 through 6.6 have been developed to ensure that the data obtained is as accurate and complete as possible. These procedures should be used by EPA field personnel unless there are compelling technical or safety factors at a specific site which demand modified approaches. In such a case, the reasons for the deviation from the standard procedures should be briefly described in the inspection report.

6.1 BASELINE INSPECTION TECHNIQUE

The baseline inspection technique can aid both the source operators and the regulatory agency inspectors in routine evaluations of incinerator and air pollution control equipment performance. The procedure is designed to identify problems at an early stage, thereby minimizing both

periods of excess emissions and equipment deterioration. By utilizing similar evaluation approaches, inspectors and operators can communicate effectively regarding the nature of any problem detected. This should allow operating problems to be quickly corrected and reduce the number of enforcement actions necessary.

6.1.1 Basic Principles

The fundamental principle underlying the baseline inspection technique is that incinerator and control device performance be evaluated primarily by comparison of present conditions with specific baseline data. In other words, each separate incinerator system should be approached initially with the assumption that its operating characteristics and performance levels will be unique. It is necessary to take this position since there are a myriad of process variables and control device design factors which can singly or collectively influence operation and performance levels. It is often difficult to determine why apparently similar units operate quite differently with a limited amount of data. Thus, a prime requirement of an inspection method (i.e., the baseline technique) in ensuring the collection of useful data is the comparison of conditions against a site-specific data base. Each variable which has shifted significantly is considered a "symptom" of possible operation problems.

While the baseline technique depends mainly on the machine-specific data and shifts in performance levels over time, it should not be implied that industry "norms" are irrelevant. There are cases in which deviations from certain typical industry operating conditions can be an indication of operation and maintenance problems. However, these data are considered secondary to the site-specific data. The industry data are often difficult to compile, and it is sometimes difficult to establish the relevance of the data in enforcement proceedings.

One of the major problems in inspection of an air pollution control system is that the instruments necessary to monitor basic operating conditions are often either nonexistent or malfunctioning. Data quality problems are especially severe on those units which are subject to frequent excess emission incidents and are thereby of most interest to control agencies. The design deficiencies or improper maintenance

practices which have reduced the effectiveness of the incinerator or control device usually have had a severe disabling effect on whatever instrumentation is on the control device. For these reasons, it is rarely wise to accept the data from onsite gauges at face value. The baseline technique includes some routine checks of these onsite gauges. When there is a question concerning the completeness or adequacy of the available data, the inspector must obtain the data by means of portable instruments. Such instruments can either be used by plant operators in the presence of the inspector or can be used by the inspector directly.

Performance evaluations should be done by examination of a number of different types of information. An emerging performance problem can often be determined better by evaluating the set of variables rather than relying on a shift in a single operating variable. Also, general observations concerning the extent of corrosion, solids discharge rate, and fan physical conditions can be used to support preliminary conclusions reached by examining the operating data. Failure characteristics on materials removed from the collectors (e.g., bags, discharge electrodes, nozzles) can be used to determine the type of corrective actions which have a reasonable chance of being successful. The baseline inspection technique incorporates both measurements and observations.

It is recognized that the control agency inspection represents an inconvenience to source personnel who must accompany the inspector while he is on plant property. To minimize this inconvenience, EPA/State inspectors should make every reasonable effort to reduce the time necessary to complete the field activities. One means to accomplishing this goal is to organize the data and observations in a coherent fashion during the inspection and to use these data to focus the field work toward the specific problems, if any, which appear to exist. If the initial information clearly suggests that there are no present or emerging problems, the inspection should be terminated. The baseline inspection technique utilizes both counterflow and co-current flow approaches in order to organize and focus inspection efforts.

6.1.2 Counterflow Technique

The counterflow approach is appropriate when the EPA inspector is making a routine inspection of a facility for which baseline data is available. Figure 6-1 illustrates the counterflow approach. It starts with an observation of the stack opacity using Method 9 or equivalent procedures. In addition to the changes in the average opacity since the baseline period, the inspector evaluates the pattern of opacity variability. The inspector also checks for fugitive emissions from control device equipment, incinerator chambers (e.g., charging door) and for emissions from bypass stacks. The next step is the evaluation of transmissometer data (if applicable) assuming that the monitor passes basic quality assurance requirements. The emphasis of the inspection is on the operating conditions, both measured and observed. The control device information coupled with the stack conditions can be used to (1) determine if there is a probable problem, (2) determine if the problem is due primarily to control-device-related conditions, and (3) determine if the problem is due primarily to incinerator-related factors. If the incineration process appears to be important, then the inspection should continue with an evaluation of any relevant portions of the incinerator. If the problem is simply control device related, the time-consuming inspection of process sources can be either abbreviated or eliminated. The counterflow approach should only be used when the baseline data is available and the basic incineration process is well documented in the agency files.

6.1.3 Co-Current Technique

The co-current inspection starts with the preparation of a flowchart of the incineration/control device system. The inspector starts with the waste storage area and follows the incineration process in a co-current fashion. The emphasis in this type of inspection is on the waste material and fuel characteristics, charging rates and procedures, operating temperatures and pressures, and other information relevant to the generation of air pollutants. The co-current flow approach is illustrated in Figure 6-2.

Due to the diversity of hospital incinerators and control systems, it is important that the inspection procedures incorporate some

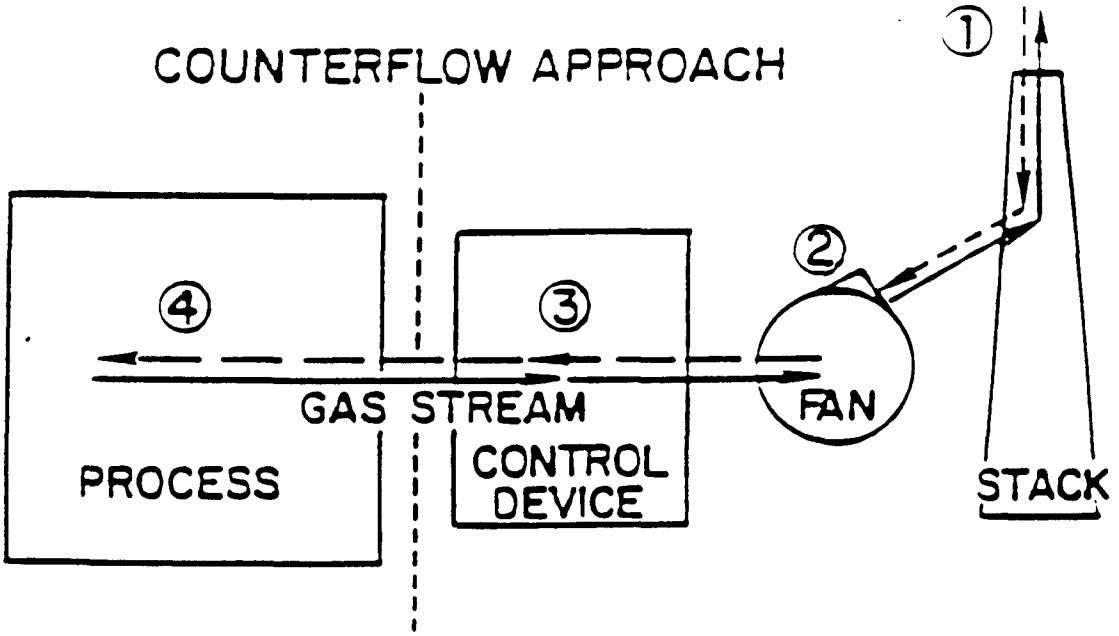

Figure 6-1. Counterflow inspection approach.

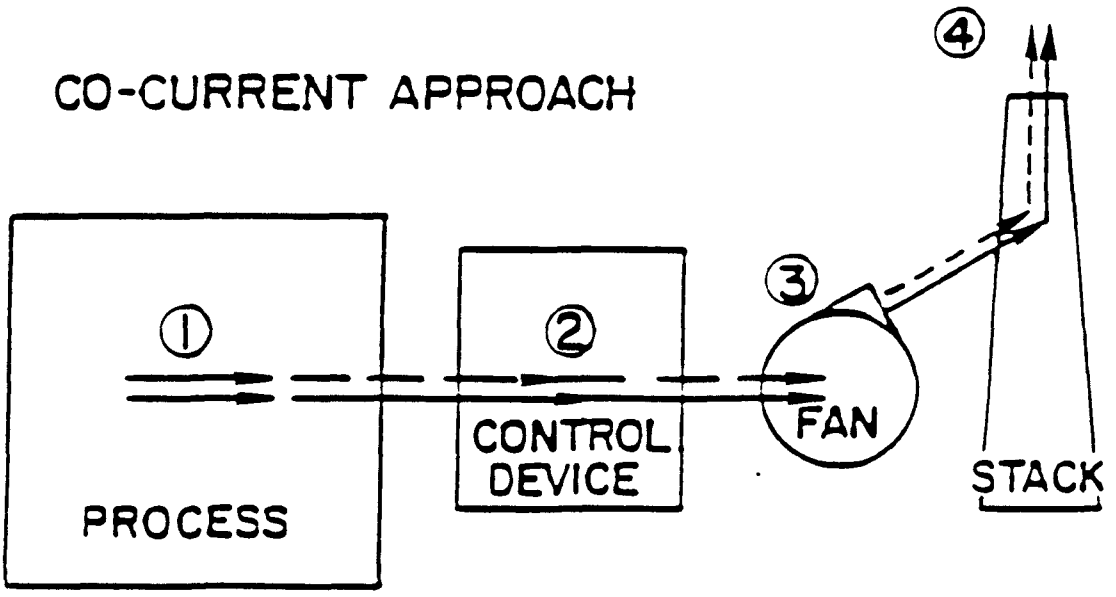

Figure 6-2. Co-current inspection approach.

flexibility. The baseline inspection technique includes several levels of intensity. These can be preselected by agency personnel before the inspection, based on normal targeting criteria. The level also can be changed by the inspector during the field work based on preliminary data and observations. This flexibility allows the agency to focus on actual emission problems instead of simply completing a prescribed number of inspections. The flexibility built into the baseline technique also must be exercised whenever, in the judgment of the inspector, the standard procedures would be unsafe or incorrect for a specific source. It also should be noted that specific inspection activities can be deleted. However, inspectors should not add new or different procedures without the express approval of supervisory personnel.

6.2 LEVELS OF INSPECTION

Without any constraints of Agency manpower and resources, it would be desirable to conduct detailed engineering oriented inspections at all sources. This is obviously impractical due to the large number of air pollution sources inspected regularly by EPA Regional Offices and the State and local agencies. Levels of inspection have been incorporated into the inspection program to give control agencies the opportunity to properly allocate the limited resources available. The most complete and time consuming evaluations are done only when preliminary information indicates that there is or will soon be a significant emission problem.

The levels of inspection are designated as 1 through 4 with the comprehensiveness of the evaluation increasing as the number increases. The types of activities normally associated with each level and the experience levels necessary to conduct the different levels vary substantially.

6.2.1 Level 4 Inspections

The Level 4 inspection is the most comprehensive of the four levels and is done explicitly to gather baseline information for use later in evaluating the performance of the specific sources at a given facility. This type of inspection should be done jointly by a senior inspector and the EPA, State, or local agency personnel who will be assigned responsibility for the plant.

The best time to conduct a baseline inspection (Level 4 inspection) is during initial compliance testing. The initial compliance test following the installation of the incinerator and/or control equipment is preferred because the system is new and operating at conditions designed and set by the vendor. Typically, incinerators and/or air pollution control systems (APCS) are purchased with performance guarantees that require emission tests demonstrating a prescribed performance level that ensures compliance with applicable emission regulations. Data quality problems associated with instrumentation (e.g., pressure gauges, thermocouples, and liquid flow meters) are minimized because they are new and the vendor has ensured that they are operating properly to achieve guaranteed performance. When baseline inspections are performed simultaneously with the initial compliance tests, documentation of the key operating levels is established with credibility and reliability for reference in followup Level 2 and 3 inspections. Comparison of data collected on subsequent inspections can be compared to the baseline data and will allow the inspector to identify differences in operating conditions that may be causing compliance problems.

An important part of the Level 4 inspection is the preparation of general incinerator and control device flowcharts. As a starting point, the inspector should request the block flow diagrams or drawings for the incineration system. Specific flowcharts should be prepared so that all of the important information concerning measurement ports, locations of bypass stacks, and locations of all monitoring devices are clearly shown. In addition to the pollutants measured during the compliance test, the performance of the hospital waste incineration system can be evaluated by measuring stack effluent gases such as O_2 and CO, by observing stack gas opacity, by inspecting ash quality, and by recording air pollution control device and incinerator operating parameters (e.g., temperature, draft, and pressure drop). Details should be noted on the locations where waste is generated, the general composition (i.e., relative volumes of infectious waste/general refuse, liquid/solid waste, plastic content) of the waste, the charging frequency, the size of each charge, and the type of waste charged in each charge. Additionally, samples of incinerator ash, scrubber liquor, fabric filter catch, and/or dry scrubber absorption sorbent also should be obtained for analysis.

6.2.2 Level 3 Inspections

Level 3 inspections are conducted only on those units with apparent problems identified in a Level 2 inspection (discussed later). Where necessary, portable gauges provided by the inspector are used to measure certain operating parameters. The most commonly used types of instruments are thermocouples and thermometers, combustion gas analyzers (O_2 and CO monitors), differential pressure gauges, pH meters or paper, and pitot tubes.

The Level 3 inspection includes an evaluation of stack effluent characteristics (O_2 and CO), CEM data records, control device performance parameters, and the incinerator operating conditions (e.g., temperature). Infectious waste composition may be reviewed and samples of the scrubber liquor and incinerator ash may be obtained for later evaluation. Failed fabric filter bags or electrostatic precipitator discharge electrodes may be obtained to confirm that the plant has correctly identified the general type of problem(s). In some cases, the Level 3 inspection will include an evaluation of the internal portions of an air pollution control device. This is done simply by observing conditions from an access hatch and under no circumstances should include entry by the inspector into the control device.

6.2.3 Level 2 Inspections

Level 2 inspections are the most frequent types of inspections and are important in that the observations made during these inspections determine when a Level 3 inspection is needed.

The Level 2 inspection is a limited walk through evaluation of the air pollution source and/or the air pollution control equipment. Entry to the facility is necessary. Therefore, the administrative inspection procedures specified in Chapter 2 of this manual should be followed. The inspection can be performed either in a co-current or countercurrent fashion depending on the anticipated types of problems. In either case, the inspection data gathered is limited to that which can be provided by onsite permanently mounted instrumentation and observation of operating procedures. An important aspect of this type of inspection is the evaluation of the accuracy of the data from this instrumentation. When control devices are not in service during the plant inspection, the

Level 2 inspections can include checks on their internal condition. This internal check is particularly useful for the evaluation of fabric filter performance. The inspection involves observations from access hatches and under no circumstances includes entry into the collector by the inspector. When the Level 1 data and/or the preliminary observations during Level 2 inspections indicate problems, an inspector may wish to conduct the more detailed and complete Level 3 inspection.

6.2.4 Level 1 Inspections

The Level 1 inspection is a field surveillance tool intended to provide relatively frequent but very incomplete indications of source performance. Because entry to the plant grounds is usually unnecessary, the inspection is never announced in advance. The inspector makes visible emission observations on the stacks which are visible from the plant boundary and which can be properly observed given prevailing meteorological conditions. Odor conditions are noted both upwind and downwind of the facility. Unusual conditions provide the stimulus for an in-plant inspection in the near future. If the visible emission observations and/or other observations provides the basis of a notice of violation, the information should be transmitted to hospital administrative personnel immediately to satisfy due process requirements.

The following sections define the specific inspection points included in Level 1, 2, and 3 inspections of hospital waste incinerators and the major types of air pollution control systems. Procedures involved in preparation of baseline data (Level 4 inspections) also are covered since the procedures differ for each type of system. Additionally, matrices are included in each section on waste characterization, combustion equipment, and air pollution control equipment which summarize and compare the types of inspections included in each inspection level.

6.3 COMMON INSPECTION ACTIVITIES

There are several inspection activities that are common to the different types of inspections (i.e., inspections of waste, combustion equipment, and air pollution control devices). These common activities are described in this section to prevent their unnecessary repetition in each of the following sections where they are applicable.

6.3.1 Prepare a System Flowchart

System flowcharts are prepared during a Level 4 inspection by agency management personnel or senior inspectors for use in subsequent inspections. Even a relatively simple chart is helpful both in preparing for and during an inspection. In general, the system flowchart is made up of three separate flowcharts; waste storage and handling, combustion equipment, and air pollution control device(s). The specific requirements for each of these flowcharts are presented in the following section.

6.3.2 Identify Potential Safety Problems

Agency management personnel and/or senior inspectors should identify potential safety problems involved in standard Level 2/Level 3 inspections at this site. To the extent possible, the hospital personnel should eliminate these hazards. For those hazards which cannot be eliminated, agency personnel should prepare notes on how future inspections should be limited and should prepare a list of the necessary personnel safety equipment. A partial list of common health and safety hazards include the following:

1. Eye injuries while observing combustion conditions through observations hatches;
2. Skin contact with sharps and infectious wastes;
3. Thermal burns due to contact with hot equipment.
4. Inhalation hazards due to fugitive leaks from high static pressure scrubber vessels and ducts;
5. Eye hazards during sampling of scrubber liquor or exposure to dry scrubber alkali solids and slurries;
6. Slippery walkways and ladders;
7. Fan disintegration;
8. Inhalation hazards due to fugitive leaks from dry scrubber inlet breechings, absorber vessels, particulate control systems, and alkaline reagent storage/preparation/supply equipment;
9. Corroded ductwork and particulate control devices;
10. High voltage in control cabinets;
11. Inhalation hazards due to low stack discharge points;
12. Weak catwalk and ladder supports;
13. Hot fabric filter roof surfaces;

14. Compressed air gauges in close proximity to rotating equipment or hot surfaces;

15. Fugitive emissions from fabric filter system; and

16. Inhalation hazards from adjacent stacks and vents.

6.3.3 Evaluate Locations for Measurement Ports

Many existing incinerators and air pollution control devices do not have convenient and safe ports that can be used for static pressure, gas temperature, oxygen, and carbon monoxide measurements. One purpose of the Level 4 inspection is to select (with the assistance of plant personnel) locations for ports to be installed at a later date to facilitate Level 3 inspections. Information regarding possible sample port locations for incinerators and air pollution control devices is provided in the U. S. EPA Publication titled, "Preferred Measurement Ports for Air Pollution Control Systems," EPA 340/1-86-034.

6.3.4 Evaluate Visible Emissions

If weather conditions permit, determine the wet scrubber effluent average opacity in accordance with EPA Method 9 procedures (or other required procedure). The observation should be conducted during routine process operation and should last 6 to 30 minutes for each stack and bypass vent. The observation should be made after the water droplets contained in the plume vaporize (where the steam plume "breaks") or at the stack discharge if there is not a steam plume present. The presence of a particulate plume greater than 10 percent generally indicates a scrubber operating problem and/or the generation of high concentrations of sub-micron particles in the process and/or the presence of high concentrations of vaporous material condensing in the effluent gas stream.

In addition to evaluating the average opacity, inspectors should scan the visible emission observation worksheet to identify the maximum and minimum short-term opacities. This is especially useful information if there are variations in the incinerator operating condition during charging, soot blowing of a waste heat boiler, or other cyclic activity. The differences in the minimum and maximum opacities provides an indication of changing particle size distributions.

If weather conditions are poor, an attempt should still be made to determine if there are any visible emissions. Do not attempt to determine

average opacity during adverse weather conditions. The presence of a noticeable plume indicates air pollution control device operating problems.

6.3.5 Evaluate Double-Pass Transmissometer Physical Condition

If a transmissometer is present, and if it is in an accessible location, check the light source and retroreflector modules to confirm that these are in good working order. Check that the main fan is working and that there is a least one dust filter for the fan. On many commercial models, it is also possible to check the instrument alignment without adjusting the instrument. (NOTE: On some models, moving the dial to the alignment check position will cause an alarm in the control room. This is to be moved only by plant personnel and only when it will not disrupt plant operations).

Some fabric filters have one or more single pass transmissometers on outlet ducts. While these can provide some useful information to the system operators, these instruments do not provide data relevant to the inspection.

6.3.6 Evaluate Double-Pass Transmissometer Data.

Obtain the continuous opacity records and quickly scan the data for the previous 12 months to determine time periods that had especially high and especially low opacity. Select the dry scrubber operating logs and the process operating logs that correspond with the times of the monitoring instrument charts/records selected. Compare the dry scrubber operating data and process operating data against baseline information to identify the general category of problem(s) causing the excess opacity incidents. Evaluate the source's proposed corrective actions to minimize this problem(s) in the future. During the inspection, if the unit is working better than during other periods, it may be advisable to conduct an unscheduled inspection in the near future.

As part of the review of average opacity, scan the data to determine the frequency of emission problems and to evaluate how rapidly the operators are able to recognize and eliminate the condition.

Evaluate the average opacity data for selected days since the last inspection, if the transmissometer appears to be working properly. Determine the frequency of emission problems and evaluate how rapidly the

fabric filter operators are able to recognize and eliminate the conditions.

6.3.7 Sulfur Dioxide, Nitrogen Oxides, and Hydrogen Chloride Monitor Physical Conditions

If the monitors are in an accessible location, confirm that the instruments are in good mechanical operating condition and that any sample lines are intact. Check calibration and zero check records for all instruments. Whenever working in the areas around the continuous emissions monitors, inspectors should be cautious about fugitive leaks of effluent gas.

6.3.8 Sulfur Dioxide, Nitrogen Oxides, and Hydrogen Chloride Emission Data

An inspection of monitoring data, similar to that conducted for transmissometers (see Section 6.5.4.2.8), also should be made of the monitoring data for sulfur dioxide, nitrogen oxides, and hydrogen chloride monitors.

High emission rates of either sulfur dioxide or hydrogen chloride indicate significant problems with the dry scrubber system. The general classes of problems include but are not limited to poor alkaline reagent reactivity, inadequate approach-to-saturation (wet-dry systems), low reagent stoichiometric ratios, low inlet gas temperatures, and makeup reagent supply problems. If high emission rates of either sulfur dioxide or hydrogen chloride are observed during the inspection, facility personnel should be consulted to determine both the cause of the problem(s) and appropriate corrective action(s).

High nitrogen oxide concentrations indicate a problem with the combustion equipment operation, an increase in the waste nitrogen content, or a problem with the nitrogen oxides control system.

6.3.9 Modify Standard Inspection Checklists

Senior inspectors and/or agency management personnel should modify the checklists presented in the Appendices of this manual to match the specific conditions at the facility being inspected. Inspection points which are irrelevant and unnecessarily time consuming should be omitted to reduce the inspection time requirements and reduce the disruption of the facility personnel's schedule. Also, any inspection steps which involve unreasonable risks to the inspector, the plant personnel, or the equipment

should be deleted. In some cases, it may be necessary to add other inspection points not discussed in this manual. At the conclusion of the Level 4 inspection, the modified checklist should be included in the inspection file.

6.4 CHARACTERIZATION OF WASTE

Hospital wastes are heterogeneous, consisting of general refuse, laboratory and pharmaceutical chemicals and containers, and pathological wastes; all or some of these wastes may contain pathogens or infectious agents and may be considered infectious wastes. While most States prohibit disposal of low-level radioactive waste in incinerators (unless licensed for this use), there is also a potential for improper inclusion of these wastes in incinerator charge material. General refuse from hospitals is similar to generic wastes from residences and institutions, and include artificial linens, paper, flowers, food, cans, diapers, and plastic cups. Laboratory and pharmaceutical chemicals can include alcohols, disinfectants, antineoplastic agents, and heavy metals, such as mercury. Infectious wastes include isolation wastes (refuse associated with isolation patients), cultures and stocks of infectious agents and associated biologicals, human blood and blood products, pathological wastes, contaminated sharps, and contaminated animal carcasses, body parts and bedding.[1] In the U.S., infectious wastes are required to be discarded in orange or red plastic bags or containers. Containers should be marked with the universal biological hazard symbol (Figure 6-3). Often these "red bag" wastes may contain general refuse discarded along with the infectious waste.

The purpose of characterizing waste during an inspection is to identify the types of waste being burned in order to assess whether the wastes are within any limitations stipulated in the operating permit or State regulations. Furthermore, characterization of the waste will assist in evaluating the potential impacts on pollutant formation, proper incinerator design and operation, air pollution control equipment performance, and waste handling and charging practices that could potentially produce fugitive emissions of infectious agents. Potential pollutants of concern from hospital incinerators that are affected by waste composition include particulate matter, particulate metals, acid gases (hydrogen chloride

Figure 6-3. The biological hazard symbol.[2]

[HCl], hydrogen fluoride, sulfur dioxide, sulfuric acid, nitrogen oxides), toxic organics (e.g., dioxins and furans), radionuclides, and infectious agents. The characteristics of the wastes that contribute to the formation and emission of these pollutants are discussed below.

Particulate matter. The quantity and characteristics of emissions of particulate matter from the combustion of hospital wastes are determined by three factors: (1) entrainment of noncombustible materials, (2) incomplete combustion of combustible materials, and (3) condensation of vaporous material. The noncombustible materials contained in hospital wastes are dependent on the ash content of the combustible materials and other miscellaneous noncombustible materials contained in the wastes, such as powdered inorganic materials and fines from the fracture of sharps. Particulate emissions from incomplete combustion of combustible materials are influenced by the moisture content, heating value, and bulk density of the feed wastes. These factors should be considered in the design and operation of the incinerator to maximize combustion efficiency. Condensation of vaporous materials results from volatilization of noncombustible substances that have vaporization temperatures within the range of those in the primary chamber with subsequent cooling in the flue gas. These materials usually condense on the surface of other fine particles. Because of the inverse relationship between surface area and particle size, condensible materials are often selectively distributed on fine particles which makes their capture by conventional air pollution control devices difficult. Particulate emissions from one study of 18 uncontrolled hospital incinerators ranged from 1.37 to 36.49 lb per ton of feed with an average of 7.52 lb/ton.[3]

Particulate metals. Particulate metal emissions are dependent on the metals content of the feed material. Metals may exist in the waste as either parts of discarded instruments or utensils, in plastics and inks, or as discarded heavy metals used in laboratories. An example is mercury from dental clinics. Many metals are converted to oxides during combustion and are emitted primarily as submicron to micron size particles. Metals that volatilize at primary chamber temperatures may selectively condense on small, difficult to control particles in the incinerator flue gas. Metals generally thought to exhibit fine-particle enrichment are As, Cd, Cr, Mn, Ni, Mo, Pb, Sb, Se, V, and Zn.[4]

Acid gases. Sulfur dioxide (SO_2) emissions are directly related to the sulfur content of the waste material. Two parts by weight of SO_2 are generated for each part of sulfur combusted. Alkaline materials that may exist in the waste materials could potentially react with the SO_2 and produce solid salts that would be either retained in the bottom ash or emitted as particulate with the flue gas. However, the relatively large amounts of halogenated plastics in typical hospital waste result in the formation of HCl which has a higher affinity for the available alkaline materials. As a result, most of the sulfur in the waste is emitted as SO_2, with a small amount emitted as sulfur trioxide (SO_3). Moisture in the flue gas can react with the SO_2 and SO_3 to produce sulfuric acid. Uncontrolled SO_x emissions from one study of two hospital incinerators ranged from 1.47 to 3.01 lb per ton of feed with an average of 1.85 lb/ton.[5]

Halogens such as chlorine, fluorine, and bromine in the wastes will produce HCl, hydrogen fluoride (HF), hydrogen bromide (HBr) when combusted. Potential sources of halogens in the waste stream include polyvinyl chloride (PVC), other halogenated plastics, and halogen-containing salts. Because of the relatively large amounts of plastics in hospital wastes, concentrations of HCl from hospital incinerators can be significantly higher than from municipal incinerators. Hospital wastes typically contain about 20 percent plastics with levels as high as 30 percent reported.[6] Table 6-1 presents an ultimate analysis of four plastics usually found in hospital wastes. Uncontrolled HCl emissions from hospital incinerators from one study of 18 hospitals ranged from 6.6 to 99.4 lb per ton of feed with an average of 45.4 lb/ton.[7]

Nitrous oxides (NO_x) emissions from hospital incinerators result from conversion of the nitrogen in the combustion air, referred to as thermal NO_x, and the nitrogen contained in the fuel, fuel NO_x. Thermal NO_x is extremely sensitive to temperature. Fuel NO_x is less temperature sensitive and will increase proportionally with waste nitrogen content.[8] Uncontrolled NO_x emissions from one study of two hospital incinerators ranged from 4.64 to 7.82 lb per ton of feed with an average of 6.02 lb/ton.[9]

TABLE 6-1. ULTIMATE ANALYSES OF FOUR PLASTICS[a]
(Weight Percent)

	Polyethylene	Polystyrene	Polyurethane	Polyvinyl chloride
Moisture	0.20	0.20	0.20	0.20
Carbon	84.38	86.91	63.14	45.04
Hydrogen	14.14	8.42	6.25	5.60
Oxygen	0.00	3.96	17.61	1.56
Nitrogen	0.06	0.21	5.98	0.08
Sulfur	0.03	0.02	0.02	0.14
Chlorine	Tr	Tr	2.42	45.32
Ash	1.19	0.45	4.38	2.06
Higher heating value, Btu/lb	19,687	16,419	11,203	9,754

[a]Reference 10.

Infectious agents or pathogens. Hospital incinerators have traditionally been used to treat infectious wastes. The presence of infectious wastes in the incinerator feed is easily identified by red or orange plastic bags or containers marked with the biological hazard symbol. Proper operation of the incinerator with adequate combustion temperatures, excess air rates, and retention times should effectively destroy the pathogens. Many States now require combustion temperature of 1800°F and retention times in the secondary chamber of 1 second. Because of the potential for fugitive releases of infectious agents, bag and container integrity should be maintained. Bags and containers should be handled, transported, and stored in a manner that will prevent tears. If syringes or other sharps are included, these sharp wastes should be placed in rigid, puncture-resistant containers.

6.4.1 Waste Characteristics That Affect Incinerator Operation

Waste moisture and heat content have major impacts on the thermal input to the incinerator. The heating value of waste corresponds to the quantity of heat released when the waste is burned, commonly expressed in Btu/lb. The net heating value of a waste decreases with increased moisture content since approximately 1,200 Btu of heat are necessary to evaporate each pound of water in the waste. The net heating value of the waste should be considered in assessing the need for auxiliary fuel firing. As a rule of thumb, a minimum heat content of about 5,000 Btu/lb is required to sustain combustion.[11] Most incinerator manufacturers rate the burn rate capacities for their units utilizing the Incinerator Institute of America (IIA) Solid Waste Classification system which is based on moisture content and heating value. The IIA was absorbed by the National Solid Wastes Management Association in 1974. Table 6-2 presents the IIA classification system.

Wide variations in thermal input will affect the temperatures, excess air rates, and retention times required for efficient combustion. Charge rates should be varied with the moisture content and heating value to prevent overcharging or refractory damage and slagging. During normal operation of the incinerator, the operator should mix feed material with different heating values to prevent upset combustion conditions. The loading hopper should be loaded with bags of red bag waste, trash, and

TABLE 6-2. INCINERATOR INSTITUTE OF AMERICA SOLID WASTE CLASSIFICATIONS[a]

Type	Description
0	Trash, a mixture of highly combustible waste such as paper, cardboard, cartons, wood boxes, and combustible floor sweepings from commercial and industrial activities. The mixture contain up to 10 percent by weight of plastic bags, coated paper, laminated paper, treated corrugated cardboard, oil rags, and plastic or rubber scraps. This type of waste contains 10 percent moisture, 5 percent incombustible solids and has a heating value of 8,500 Btu per pound as fired.
1	Rubbish, a mixture of combustible waste such as paper, cardboard cartons, wood scrap, foliage, and combustible floor sweepings, from domestic, commercial, and industrial activities. The mixture contains up to 20 percent by weight of restaurant or cafeteria waste, but contains little or no treated papers, plastics, or rubber wastes. This type of waste contains 25 percent moisture, 10 percent incombustible solids and has a heating value of 6,500 Btu per pound as fired.
2	Refuse, consisting of an approximately even mixture of rubbish and garbage by weight. This type of waste is common to apartment and residential occupancy, consisting of up to 50 percent moisture, 7 percent incombustible solids, and has a heating value of 4,300 Btu per pound as fired.
3	Garbage, consisting of animal and vegetable wastes from restaurants, cafeterias, hotels, hospitals, markets, and like installations. This type of waste contains up to 70 percent moisutre, up to 5 percent incombustible solids, and has a heating value of 2,500 Btu per pound as fired.
4	Human and animal remains, consisting of carcasses, organs, and solid organic wastes from hospitals, laboratories, abattoirs, animal pounds, and similar sources, consisting of up to 85 percent moisture, 5 percent incombustible solids, and having a heating value of 1,000 Btu per pound as fired.
5	Byproduct waste, gaseous, liquid or semiliquid, such as tar, paints, solvents, sludge, fumes, etc., from industrial operations. Btu values must be determined by the individual materials to be destroyed.
6	Solid byproduct waste, such as rubber, plastics, wood waste, etc., from industrial operations. Btu values must be determined by the individual materials to be destroyed.

[a]Reference 12.

garbage, rather than charging all the red bag waste at one time, then all the garbage, etc. The objective is to maintain a constant thermal input rate (Btu/h).

Wastes containing metals and plastics are a particular concern for pollutants from hospital incinerators. When burned, metals may become metal oxides with particle size distributions primarily in the submicron to micron size range. These small particles may become easily entrained with limited capture by conventional air pollution control equipment. Some plastics such as polyethylene and polystyrene do not contain significant amounts of halogens and can be incinerated efficiently without major concern for toxic pollutant formation. However, the high heating value of these and other plastic materials can cause excessively high temperatures in the primary combustion chambers with increased potential for refractory damage, slagging, and clinker formation. Chlorinated plastics, such as polyvinyl chloride, produce HCl.

6.4.2 Handling of Infectious Wastes

Infectious wastes require unique handling, transport, and charging procedures to prevent fugitive emissions of infectious agents. Infectious waste should be transported to the incinerator in either red or orange plastic bags or in containers marked with the biological hazard symbol. In no case should the inspector open the bags or containers. Handling and transport of these wastes should be performed with care to protect the integrity of the bags and to ensure containment of the wastes. In general, plastic bags containing infectious waste should not be transported through a chute or loaded by mechanical devices. Storage of these wastes prior to incineration should be in a specially designated area with limited access. The area should be kept clean and free of rodents and vermin. Storage temperature and duration should be kept to a minimum to limit microbial growth and putrefaction. The presence of obnoxious odors may indicate that materials are being stored for excessive periods of time at elevated temperatures. If a continuous feed incinerator is used to burn both infectious wastes and general refuse, infectious waste should not be charged to the incinerator during startup unless the incinerator is brought to proper operating temperature on fossil fuel. It is recommended that general refuse be charged until the unit is operating at normal combustion chamber temperatures.

6.4.3 Waste Inspection

6.4.3.1 General Considerations. Inspection of waste at a hospital waste incineration facility is an important part of each inspection regardless of whether a Level 4, 3, or 2 inspection is performed. The main purpose of the waste inspection from an air inspector's perspective is to gather data to determine the potential for fugitive emissions (i.e., odors, particulate) and stack emission problems related to waste composition (e.g., high plastic content). The air inspector will probably not have authority regarding waste handling or management at the facility. However, he/she can be on the look out for potential infractions by reviewing operating permits, noting any prohibited wastes (e.g., low-level radioactive, hazardous wastes) and observing the waste contents. For example, an incinerator that does not have an Nuclear Regulation Commission (NRC) permit or a permit from an agreement State (a State that has an agreement with the NRC to issue permits) for burning low-level radioactive waste should not be burning such waste. Similarly, an incinerator without a RCRA permit or State permit/license cannot burn hazardous waste. However, the air inspector should be concerned mainly with identifying the components in the waste that could contribute to stack emissions and with observing the waste storage and handling procedures that could promote fugitive emissions of particulate matter and/or odors. Table 6-3 presents a matrix that shows the types of waste inspections included in each inspection level.

6.4.3.2 Level 4 Waste Inspection Procedures. The Level 4 waste inspection procedures include the following: preparation of a waste generation, storage, and handling flowchart; the identification of potential safety problems, the review of waste management records; the characterization of waste composition; the observation of waste storage and handling procedures; and the preparation of a waste inspection checklist. These procedures are discussed in detail below.

6.4.3.2.1 Preparation of flowchart. A flowchart of the waste generation, handling, storage, and charging system should be prepared for use in subsequent Level 2 and 3 inspections. It should consist of a chart that identifies:

TABLE 6-3. MATRIX OF MEDICAL WASTE INSPECTION ACTIVITIES ASSOCIATED WITH INSPECTION LEVELS 1, 2, 3, AND 4

Inspection activity/equipment	Level 4	Level 3	Followup Level 2	Basic Level 2	Level 1	Text reference
1. Prepare waste management system flowchart	x					6.4.3.2.1
2. Identify potential safety problems	x	x	x	x	x	6.3.2
3. Modify standard inspection checklist	x					6.3.9
4. Summarize waste management records	x					6.4.3.2.3
5. Estimate the relative volumes of the following:						6.4.3.2.4
a. General refuse	x	x	x	x		
b. Red bag waste	x	x	x	x		
c. Solid waste	x	x	x	x		
d. Liquid waste	x	x	x	x		
e. Plastic waste	x	x	x	x		
f. PVC plastic waste	x	x	x	x		
g. Metals	x	x	x	x		
h. Toxic materials	x	x				
i. Radioactive materials	x	x				
6. Estimate the following properties of the waste:						6.4.3.2.4
a. Moisture content	x	x	x			
b. Bulk density	x	x	x			
7. Perform waste survey if warranted	x	x	x			6.4.3.2.4
8. Evaluate waste handling procedure by:						6.4.3.2.5
a. Checking for properly labeled/colored packages	x	x	x	x		
b. Checking for liquids packed in capped or stoppered bottles/flasks	x	x	x	x		
c. Noting whether contaminated sharps are packed in rigid, puncture-resistant containers	x	x	x	x		
d. Checking packaging integrity	x	x	x	x		
e. Noting tears, punctures, and leaking liquids	x	x	x	x		
f. Determining potential for ruptures of waste packaging	x	x	x	x		
9. Evaluate waste storage procedures by:						6.4.3.2.6
a. Inspecting packaging for tears, ruptures, and leaking liquids	x	x	x	x		
b. Estimating storage temperature (i.e., ambient)	x	x	x	x		
c. Measuring storage temperature	x	x				
d. Determining waste storage durations by consulting hospital records or personnel	x	x	x	x		
e. Note general housekeeping procedures	x	x	x	x		
10. Determine if prohibited wastes are being incinerated	x	x				6.4.3.2.3

1. Generation sites of infectious and laboratory wastes;
2. Method of transporting to storage area;
3. Any refuse holding or staging area;
4. Storage areas and charging pits, chutes, or rams,

6.4.3.2.2 Identify potential safety problems. The identification of potential safety problems is addressed in Section 6.3.2.

6.4.3.2.3 Waste management records. A summary of the normal waste generation and management records, if any, maintained by the hospital should be compiled. These data will be invaluable during Levels 2 and 3 inspections since infectious waste will be contained in plastic bags or containers at the incinerator site and should not be opened by the inspector. Prohibited wastes should be listed. Special procedures for handling bulk liquids (if any) should be addressed.

As soon as regulations have been promulgated implementing the Medical Waste Tracking Act of 1988, medical facilities in the 10 affected States will be required to keep records regarding waste generation. Therefore, inspectors in these States will be able to determine to some extent the types and volumes of waste being incinerated. The requirements for these facilities under this pilot program are detailed in Section 2.2.2.3. Eventually, all 50 States may have to implement a tracking system depending on the success of this pilot program.

6.4.3.2.4 Waste composition. The waste produced by a hospital for incineration can vary in composition from day-to-day or hour-to-hour. The incinerator is designed to handle a particular range of waste physical and chemical properties. Operation of the incinerator should be varied with respect to feed rates, combustion air rates, and auxiliary fuel firing to account for the variation in wastes charged. The range of variation in waste composition that can be successfully processed by the incinerator with routine operational adjustments represents the baseline waste levels (i.e., the waste being burned is within the heat content range for which the incinerator was designed).

The relative distribution (i.e., fraction of total waste) and volumes (e.g., the number of 13-gallon size waste bags) of general refuse versus infectious "red bag" wastes should be estimated and noted during the inspection. Depending upon the packaging procedures for hospital waste,

it may be difficult for the inspector to assess the waste composition. Infectious waste bags or containers should not be opened by the inspector. If there are questions about waste composition, the appropriate hospital personnel should be located and questioned. If possible, the physical nature of the waste with respect to solids and liquids should be noted (i.e., are bottles of liquids being incinerated). Large quantities of liquid wastes should not be incinerated unless the incinerator is designed for their combustion, i.e., includes properly designed hearths with catch troughs or special injection nozzles. Waste components with high moisture contents (e.g., pathological waste) and high bulk densities (e.g., compacted waste, computer paper) should be noted. Special care should be taken to note any potentially toxic material, such as mercury, contained in the waste stream. The plastic content of the wastes also should be identified. If possible through consultation with hospital personnel, the inspector should identify the relative portion of the plastics that are halogenated plastic, i.e., PVC.

During a Level 3 or Level 2 inspection (i.e., inspection prompted by public complaints and/or continued compliance problems), in some cases, it may be necessary to evaluate the waste composition and heat content more accurately. The most realistic method of obtaining more accurate information on the waste is to consult the waste management records at the hospital to identify each waste type generated and to determine the rate at which each waste type is generated. This information allows weight fractions for each waste type based on the total amount of waste generated to be calculated. (If records are unavailable, a waste generation survey may be required.) A chemical analysis could then be performed by an experienced laboratory on a representative sample of each waste type. The heat content of the waste can be estimated using waste fractions and tabulated heat contents for each waste type. This type of analysis need only be performed if the cause of the problem prompting the inspection is suspected to be the waste mixture, i.e., if the incinerator and air pollution control device are operating properly and consequently, waste problems are indicated.

6.4.3.2.5 Handling practices--infectious waste.[12] Handling practices are of concern to the air pollution inspector because of the potential for

fugitive releases of pathogens or toxic chemicals. For proper accreditation, each hospital should have in place a waste management plan for infectious and toxic wastes. These plans should require that the waste material be disposed in properly marked containers that prevent release of the wastes and exposure to humans. Liquid infectious wastes should be placed in capped or tightly stoppered bottles or flasks. Solid or semisolid infectious wastes should be placed in red or orange plastic bags or marked containers. Contaminated sharps should be placed in impervious, rigid, and puncture-resistant containers. The infectious wastes should be transported to the incineration facility in these bags or containers. The inspector should visually inspect the bags and containers at the incineration facility to ensure that the integrity of the packaging is being maintained. Obvious tears, ruptures, or leaking liquids should be noted. Handling practices at the incineration facility should be evaluated to assess the potential for tearing or rupturing the packaging materials. In general, these plastic bags and containers should be moved by hand without the use of mechanical loaders or manually loaded carefully into dumpsters for transport.

Observations should be made of material charging practices. Because of the possible variations in feed material moisture and heat contents, materials of varying heat and moisture values should be mixed to produce a heterogenous feed charge with relatively consistent combustion characteristics.

6.4.3.2.6 Storage practices--infectious waste.[14] Ideally, infectious wastes should be incinerated as soon as possible after generation. However, same-day incineration is not always possible, necessitating storage of the material at the incineration facility. The four important factors to be considered in storing infectious wastes are protecting the integrity of the packaging, storage temperature, duration of storage, and design of the storage area. The packaging should be inspected to ensure that there are no ruptures, tears, or leaking liquids. Storage temperature and duration affect microbial growth and putrefaction. Inspectors should note any odors and should review hospital records or consult operators to assess storage times. Temperatures in the storage area should be measured and noted. Storage of material for longer than 4

to 5 days should only be allowed in refrigerated facilities. The storage area itself should be specially designated with limited access. The inspector should note general housekeeping procedures to prevent vermin or rodent infestation that could damage the integrity of the containment packaging.

6.4.3.2.7 Preparation of site-specific checklist. The senior inspection personnel should prepare a site-specific waste inspection checklist for the hospital. The checklist should specify the specific waste conditions and locations to be inspected. The checklist should note any site-specific safety hazards associated with each inspection point. Additionally, the checklist should include permit specifications or regulations that limit storage duration and temperature and that exclude certain wastes from being incinerated or that allow incineration of certain wastes. An example of a waste inspection checklist is included as Appendix A.

6.5 EVALUATION OF COMBUSTION EQUIPMENT

Variations in emission rates from hospital incinerators are due to variations in the chemical and physical properties of the hospital wastes, variations in incinerator design, and variations in incinerator operation. The baseline inspection technique is predicated on establishing baseline conditions and evaluating variations in performance that result from shifts in operating conditions. Incinerator design does not vary over time. Inspections of waste characteristic effects were discussed in Section 6.3. The purpose of this section is to present background information on how combustion processes influence pollutant formation and emission rates, how incinerator operation can be adjusted to reduce emissions, and guidance on how to perform inspections of the incinerator itself.

6.5.1 Particulate Matter and Particulate Metals

As stated in Section 6.4.1, particulate emissions from hospital incinerators are determined by three factors: (1) entrainment of noncombustible materials (2) incomplete combustion of combustible materials, and (3) condensation of vaporous materials. The presence of noncombustible materials in the incinerator feed is a characteristic of the waste feed material. This noncombustible material or ash can either

be retained in the incinerator bottom ash or be entrained and emitted with the flue gas. The potential for entrainment of the ash is a function of the incinerator design and operation and will increase with increased turbulence and gas velocities in the primary combustion chamber. The relatively lower turbulence and gas velocities in the primary combustion chamber of a controlled-air incinerator (compared to a multiple-chamber design) contributes to the relatively lower particulate emission rates from these types of units. Complete combustion of combustible material requires adequate temperatures, excess air, turbulence or mixing, and retention time. Because of the variability in hospital waste with respect to heating values, moisture contents, etc., incinerator operating parameters should be varied with the variations in the waste to maximize combustion. In general, higher temperatures, excess air rates, turbulence, and retention time result in improved combustion. However, factors that result in higher gas velocities (e.g., higher excess air rate) can result in increased particulate entrainment.

Condensation of vaporous materials occurs when temperatures in the primary chamber exceed the volatilization temperature of the material with subsequent cooling and condensation in the flue gas exhaust. Generally, primary chamber combustion temperatures should be in the range of 1400° to 1800°F for good combustion. Temperatures in excess of 1800°F may result in excessive slagging and refractory damage.[15]

6.5.2 Acid Gases

The principal acid gas of concern from hospital incinerators is HCl. The determining factor in HCl formation and emission is the availability of chlorine in the feed material. Combustion modifications and incinerator operational adjustments have little, if any, affect on HCl generation and emissions. In the presence of available hydrogen, as would exist in the typical highly organic hospital wastes, most of the available chlorine will be converted to HCl.

From an incinerator design and operation standpoint, SO_2 is like HCl. Most of the sulfur in the wastes will be converted to SO_2 regardless of incinerator design or operation.

Of the principal acid gases, only NO_x formation will be significantly affected by incinerator design and operation. The two types of NO_x

formation mechanisms are thermal formation and waste feed nitrogen conversion. Thermal NO_x results from exposure of air to high temperatures in the combustion zone. The higher the excess-air rate at the flame zone, the higher the thermal NO_x formation potential. Fuel NO_x formation is less temperature sensitive than thermal NO_x and is more dependent on the waste nitrogen content. NO_x formation in hospital incinerators should be lower than in coal-fired boilers due to the relatively lower flame temperatures. Thermal and fuel NO_x formation is lower in starved-air units than in excess-air units due to the staged combustion design. Operational modifications that lower excess-air rates and temperatures will reduce NO_x formation. However, these same modifications may result in lower combustion efficiency with resulting increases in particulate emissions and dioxin and furan formation.

6.5.3 Organics

Combustion conditions that favor increased particulate emissions due to incomplete combustion also favor increased organic emissions. Organic material is found in the waste and can be formed during combustion. Since these formation mechanisms are not fully understood, there are no straight-forward design procedures or operating procedures that can prevent the formation of all organic compounds. Instead, reliance is placed on the destruction of the pollutants created in the combustion process. There are three basic goals for controlling the emission of organics, namely:

1. Mixing of fuel and air to minimize the existence of long-lived, fuel-rich pockets of combustion products;

2. Attainment of sufficiently high temperatures in the presence of oxygen for the destruction of hydrocarbon species; and

3. Prevention of quench zones or low temperature pathways that will allow partially combusted waste (solid or gaseous) from exiting the combustion chamber.

6.5.4 Infectious Agents

Incineration has been traditionally used to treat infectious waste at hospitals. Incineration is especially advantageous with pathological wastes and contaminated sharps because it renders body parts unrecognizable and sharps unuseable. Properly designed and operated incinerators

can be effective in killing organisms present in the waste. In general, combustion conditions that are favorable to complete combustion and low particulate emissions are also favorable to sterilizing infectious wastes. Because of the variation in the moisture content and heating value of infectious waste, it is important to adjust waste feed and excess air rates to maintain proper incineration conditions. It is important to avoid overloading. When incinerating hospital wastes, it is essential that the secondary chamber operating temperatures be attained before loading the waste.

6.5.5 Inspection of Combustion Equipment

This section provides detailed descriptions of the types of inspections required when inspecting combustion equipment. Section 6.4.5.1 provides an overview of the types of inspections that should be performed and questions that should be answered on a combustion equipment inspection. Section 6.4.5.2 provides detailed descriptions of each inspection activity that should be performed on a Level 4 inspection. Table 6-4 is a matrix that identifies the various inspection activities and the inspection level in which they are included.

6.5.5.1 Combustion Equipment Inspection Overview.

6.5.5.1.1 Incinerator.

Charging system/procedures

- Determine if the facility has a written standard procedure for charging waste.
  - -- Maximum load size
  - -- Minimum time between charges
  - -- Minimum/maximum primary chamber temperature
  - -- Minimum/maximum secondary chamber temperature
  - -- Are charges logged and charging rate measured?
- Examine condition of mechanical charging equipment
  - -- Are isolation doors air tight?
  - -- Does charge ram have water quench sprays? Are they working?
  - -- Is spillage of infectious waste materials and subsequent contamination of surrounding area prevalent?
  - -- Do procedures exist for disinfecting hopper/ram assembly?

TABLE 6-4. MATRIX OF COMBUSTION EQUIPMENT INSPECTION ACTIVITIES ASSOCIATED WITH INSPECTION LEVELS 1, 2, 3, AND 4

Inspection activity/equipment	Level 4	Level 3	Followup Level 2	Basic Level 2	Level 1	Text reference
1. Evaluate incinerator visible emissions	x	x	x	x	x	6.3.4
2. Prepare system flowchart	x					6.5.5.2.1
3. Identify potential safety problems	x	x	x	x	x	6.3.2
4. Evaluate locations for measurement ports	x					6.3.3
5. Modify standard inspection checklists	x					6.3.9
6. Review all available records	x					6.5.5.2.5
7. Waste charging procedures						6.5.5.2.6
a. Obtain waste feed rate	x	x	x	x		
b. Review charging records for overcharging	x	x	x			
c. Observe charging procedures	x	x	x			
8. Observe combustion zone condition						6.5.5.2.7
a. Note burner flame pattern	x	x	x	x		
b. Note combustion zone condition (color)	x	x	x	x		
c. Note ash bed condition	x	x	x	x		
9. Observe bottom ash condition/handling						6.5.5.2.14
a. Observe ash handling practices	x	x	x	x		
b. Take VE readings when fugitive dust is apparent	x	x	x	x		
c. Inspect ash for burnout	x	x	x	x		
d. Review ash disposal records	x	x	x	x		
e. Obtain ash sample	x	x	x			
10. Evaluate startup/shutdown procedures						6.5.5.2.19
a. Proper minimum temperatures achieved before charging	x	x				
b. Proper waste charging	x	x				
c. Observe stack gas opacity during startup/shutdown	x	x				
11. Underfire and overfire air ports						6.5.5.2.8, 9
a. Record incinerator airflow or air pressure if monitor available	x	x	x	x		
b. Obtain readings for previous 8 hours	x	x	x	x		
c. Review operator's log to determine frequency of cleaning	x	x	x	x		
12. Incinerator draft--record incinerator static pressure if monitor available	x	x	x	x		6.5.5.2.10
13. Primary and secondary chamber temperature						6.5.5.2.11
a. Record primary and secondary temperatures from control panel	x	x	x	x		
b. Review previous 12 months data	x	x	x			
c. Measure exit gas temperature	x	x	x			
14. Oxygen (O_2) level						6.5.5.2.12
a. Record exit gas O_2 level from available monitor	x	x	x	x		
b. Review prevous 12 months' data	x	x	x			
c. Measure exit gas O_2 level	x	x				
15. Carbon monoxide (CO) level						6.5.5.2.13
a. Record exit gas CO level from available monitor	x	x	x	x		
b. Review previous 12 months' data	x	x	x			
c. Measure exit gas CO level	x	x				
16. Incinerator shell						6.5.5.2.15, 16
a. Inspect exterior shell for corrosion	x	x	x	x		
b. Inspect exterior shell for white spots	x	x	x	x		
c. Listen for audible air infiltration	x	x	x			
17. Incinerator charging area						6.5.5.2.17
a. Listen for audible air infiltration	x	x	x			
b. Inspect charge door for warping	x	x	x			
18. Evaluate general physical condition of:						
a. Incinerator	x	x	x	x		
b. Transmissometer	x	x	x	x		
c. Sulfur dioxide monitor	x	x	x	x		
d. Nitrogen oxides monitor	x	x	x	x		
e. HCl monitor	x	x	x	x		
19. Review opacity, SO_2, NO_x, and HCl monitors emission data	x	x	x	x		

- Observe charging procedure
  - -- Evaluate temporal variations in waste and combustion conditions. Does operator adjust waste charging or combustion conditions to accommodate variations?
- Are fugitive emissions from incinerator/charge assembly emitted during charging?
- If bulk liquids are being handled, are these properly fed to the incinerator via burner or atomizing nozzle?
- If pathological (Type 4) waste is being incinerated, is/are charging rate/procedures appropriate for this waste type?

Incineration system/procedures.

1. Evaluate adequacy of primary chamber and secondary chamber exit gas temperatures. These are important operating parameters relating to combustion efficiency and infectious agent destruction. Gas temperature also affects nitrogen oxides generation by thermal mechanisms.

2. Evaluate flue gas oxygen concentrations to assure adequate excess air is available. High levels may also indicate air infiltration.

3. Evaluate CO concentration of exhaust gas. Excessive CO indicates poor combustion conditions.

4. Evaluate physical condition of incinerator shell and waste feed delivery equipment. Check for audible air infiltration into incinerator and for audible air losses from undergrate plenums and forced draft supply ducts.

5. Inspect physical condition of air blower/burner assemblies.

a. Do combustion air fans appear to be operating smoothly (no squealing or vibration)? Physical condition of dampers (rusted or properly lubricated)? For automatic modulated systems, are dampers modulating as thermal load to incinerator changes?

b. Visually inspect burner assemblies and flame pattern (if viewports exist). For automatic systems, are burners modulating with thermal load of incinerator?

6. If pathological wastes are charged to incinerator, are proper operating conditions maintained? (i.e., does the primary chamber burner remain on?)

7. Evaluate stack emissions

a. Visually observe the stack emissions opacity

b. For cases where a bypass stack is present, observe whether emissions are present from the bypass stack.

8. Note whether the incinerator draft is measured/recorded

9. Inspect data recording systems to assure all parameters which are required to be monitored by the operating permit are monitored and that data recording systems are operating properly. Depending upon the size/operating frequency of the unit and operating permit conditions, monitored parameters for the combustion system can include any of the following:

a. Primary chamber temperature;

b. Secondary chamber temperature;

c. Oxygen concentration of the effluent gas;

d. Carbon monoxide concentration of the effluent gas;

e. Opacity of the effluent gas;

f. Combustion chamber pressures (draft);

g. Charging frequency and mass;

h. Ash removal frequency;

i. Auxiliary fuel usage.

10. Review startup and shutdown procedures since these can cause short term emission problems and can lead to rapid equipment deterioration. For batch feed units, the charging and startup of the incinerator should be observed during an inspection. Insure that secondary chamber temperatures have reached acceptable levels before infectious wastes are charged.

6.5.5.1.2 Residue handling and disposal.

1. Check any available records concerning incinerator bottom ash composition since this could indicate combustion problems.

2. Inspect bottom ash to determine obvious combustion problems.

3. Observe bottom ash cleanout, storage, and disposal procedures for fugitive particulate emissions.

6.5.5.2 Level 4 Combustion Equipment Inspection. The Level 4 combustion equipment inspection is a comprehensive inspection that includes all of the elements of inspection Levels 1, 2, and 3. Table 6-4

provides a matrix of the types of inspection activities included in each inspection level for combustion equipment. The following paragraphs describe the Level 4 combustion equipment inspection activities in detail while the matrix points out differences between the different levels.

6.5.5.2.1 Prepare a system flowchart. A combustion equipment system flowchart should consist of a simple diagram that includes the following elements:

1. Location of waste storage and handling area and schematic of waste charging system;

2. Incinerator chamber(s), overfire and underfire air ports; blowers and air auxiliary burner locations;

3. Location of incinerator chamber viewports;

4. Schematic of ash handling system and disposal/storage area;

5. Locations of major instruments and monitoring locations on the equipment (static pressure gauges, temperature monitors, oxygen analyzers, carbon monoxide analyzers, and operating meter); and

6. Location of control panel and monitor output and recording instrumentation.

6.5.5.2.2 Identify potential safety problems. The identification of potential safety problems is addressed in Section 6.3.2.

6.5.5.2.3 Evaluate potential safety problems. The evaluation of locations for measurement ports is discussed in Section 6.3.3.

6.5.5.2.4 Evaluate the incinerator visible emissions. The evaluation of visible emissions is discussed in Section 6.3.4.

6.5.5.2.5 Review types of records. A summary of the normal operating records and routine laboratory analyses (e.g., analysis of incinerator ash, baghouse catch, scrubber sludge) should be compiled. If possible, example photocopies of these forms should be included in the inspection file so that new personnel assigned inspection responsibilities will know what data and information are available on these forms.

6.5.5.2.6 Waste charging practices. Waste composition affects combustion conditions due to variations in moisture content and heating value. The incinerator's control system can operate only within a specified range to control air levels and auxiliary fuel. Therefore, it is important to establish a proper loading rate to maintain the proper

combination of fuel, excess-air rate, and temperature for effective combustion. If waste compositions vary dramatically, it may be necessary to vary the charging rate. When wastes are fed to the incinerator, different waste types should be mixed to achieve a more uniform moisture content and heating value. Large volumes of plastic should not be charged all at once due to possible high temperature damage to the refractory and slagging. If infectious wastes containing pathogens are included in the waste feed, it is important that the secondary chamber gas temperature be brought up to normal operating temperatures before any infectious wastes are fed to the unit. Overloading, which often results in incomplete combustion, should be avoided. The incinerator should be rated by the manufacturer for feed rates for the various Incinerator Institute of America waste classes. Obtain the feed rate that prevails during the inspection and visually identify, if possible, the waste composition and moisture content. This feed rate and waste class can then be compared to the specifications from the incinerator manufacturer. Batch loading units should be loaded as quickly as possible, especially if the refractory is still warm from the previous burn. If a hot unit is loaded and not sealed properly in a short period of time, the remaining heat in the firebrick may ignite the waste while improper combustion conditions exist in the unit.

6.5.5.2.7 Evaluate combustion zone condition. If viewports are installed in the combustion chambers, the inspector should visually inspect the combustion zone(s). Only glass covered viewports should be used. The inspector should not open charging doors, ash removal doors, or inspection doors to view the combustion chambers since serious injury can result.

During visual inspection, the observer should note:

1. The flame pattern;
2. Combustion zone condition (color); and
3. Ash bed condition.

The flame should not be smoking or impinging on the refractory wall. For starved-air units, the primary chamber should be operating at substoichiometric conditions and consequently the combustion zone should be quiescent (entrainment of large particles/pieces of waste to the

secondary chamber should not occur) and dark red or orange in color. Complete combustion should be occurring in the secondary chamber where the combustion zone should appear bright orange/yellow. For intermittent duty and continuous-duty incinerators, the waste/ash bed should be significantly reduced in volume (50 to 75 percent) before another charge is loaded into the incinerator. Pathological waste must be exposed to the flame; consequently, the waste bed should not be deeply piled.

6.5.5.2.8 Evaluate underfire air ports. If monitors are available that measure airflow rate or air pressure, readings should be taken of the values indicated. If readings are recorded by operator personnel, obtain readings taken for the last 8 hours. The inspector should review the operator's log to determine the frequency of cleaning of the air ports.

6.5.5.2.9 Evaluate overfire air ports. Same procedure as underfire air ports.

6.5.5.2.10 Evaluate incinerator draft. If pressure monitoring gauges are available, recordings of the static pressure should be taken. Incinerator drafts that are 0.0 inches of water or higher demonstrate that the incinerator is operating under a positive pressure. This positive pressure indicates a severe combustion problem and a severe personnel exposure problem. Under no circumstances should the incinerator operate with positive pressures. Positive pressure indicates an induced draft fan problem or a gas flow resistance problem either in the incinerator or in the air pollution control system.

6.5.5.2.11 Evaluate primary and secondary gas temperatures. The primary and secondary chamber exit gas temperatures are usually monitored by thermocouples. These data can be obtained from the main incinerator control panels. However, in some of the especially small units, this is not recorded on a continuous basis. The gas temperature records (if records are kept) since the last inspection should be reviewed to identify any problems in maintaining acceptable primary and secondary chamber gas temperatures. The auxiliary burners are used to maintain minimum temperature during periods of waste feed interruption or during periods when excessive quantities of wet or noncombustible waste have been charged. The gas temperature fluctuations and the status of the auxiliary burner may be determined by scanning the daily operating logs of the

incinerator, by scanning available temperature record strip charts, or by reviewing operator logs.

Measurements should be taken of exit gas temperature at the stack or breeching as close to the exit of the secondary combustion chamber as practicable. The data should be compared to any available baseline data as well as to the incinerator thermocouple data to determine if a significant change in temperature exists.

The appropriate temperature in the primary chamber for effective burnout and in the secondary chamber for effective combustion will vary with each individual unit. Baseline unit-specific temperatures should be set during the Level 4 inspection.

6.5.5.2.12 Evaluate exit gas oxygen level. If available, the continuous oxygen analyzer data for the past year should be scanned to determine if the oxygen concentrations have remained in the normal range. The typical oxygen concentrations are generally in the range of 6 to 12 percent. Values lower than 6 percent generally indicate inadequate excess air rates and incomplete combustion of volatile compounds. Values higher than 12 percent generally indicate severe air infiltration through the charging area, the incinerator shell, or the ash pit. The values presented here are typical values. However, incinerator-specific baseline levels should be set during the Level 4 inspection. Subsequent inspections should compare observed values to the baseline values for the particular unit being inspected. Instrument calibration and routine maintenance records should be reviewed.

The exit gas oxygen concentration should be measured when there are indications of combustion related emission problems and when there is no onsite oxygen analyzer. When an oxygen analyzer is present, measurement of oxygen levels by the inspector can be used to verify the accuracy of the onsite monitor.

The types of instruments available include multigas combustion gas analyzers, ORSAT analyzers, and manual single-gas absorbers. The oxygen concentration should be measured at several locations along the duct diameter. Stratification of the gas stream can result in nonuniform oxygen concentrations across the duct diameter. Also, the measurements should be repeated several times over a reasonable time span to account

for short term fluctuations in the oxygen levels. This is especially important since charging can create frequent short term oxygen concentration changes. The EPA Reference Method 3 (40 CFR Part 60 Appendix A) should be used as a guide for making oxygen measurements.

6.5.5.2.13 Evaluate exit gas carbon monoxide level. Exit gas carbon monoxide level is used as one of the indirect indicators of the completeness of combustion. Observed CO levels should be compared with baseline levels for the unit. Higher than normal CO values suggest significant combustion problems. Plant personnel should be asked about possible corrective actions to improve combustion. Also, the instrument calibration and routine maintenance records should be briefly reviewed.

Carbon monoxide concentration measurements should be made when there are indications of combustion problems and when there is no carbon monoxide analyzer installed on the unit. Values greater than normal baseline values suggest nonideal combustion conditions and the emission of partially combusted organic compounds. To ensure representative results, the measurements should be made at several locations in the duct and should be made several times over a reasonable time span. When the facility does have a CO monitor installed, measurement of CO levels by the inspector can be used to verify the accuracy of the facility's monitor.

6.5.5.2.14 Evaluate ash handling practices. Ash handling practices should be observed and noted. The inspector should observe manual removal of the ash from the incinerator for batch and intermittent duty incinerators and inspection of the mechanical removal systems for continuous duty incinerators. Additionally, the inspector should evaluate the measures taken to prevent fugitive dust emissions including quenching the ash and the placement of the ash in a covered metal container. Visible emission observations should be performed whenever there are apparent fugitive emissions from the bottom ash handling equipment. Ash storage procedures should be observed and any fugitive emissions noted. The ash should be inspected for burnout quality. Large pieces of uncombusted material indicates poor burnout. Records should be reviewed to determine ultimate disposal methods and procedures.

Samples should be obtained of the ash and sent to a laboratory for analysis of the combustible organic content and other contaminants such as

pathogens and metals. The samples should be handled carefully and properly marked as potentially containing infectious organisms.

6.5.5.2.15 Evaluate incinerator shell corrosion. Evaluate the exterior of both the primary and secondary chambers for signs of corrosion. This can be caused by the infiltration of cold air that in turn results in the absorption of highly corrosive hydrogen chloride into water droplets on the metal surfaces. The air infiltration condition worsens as the corrosion continues. This can lead to "cold" zones in the affected chamber and thereby contribute to increased emissions of partially combusted organic compounds.

6.5.5.2.16 Evaluate incinerator shell audible air infiltration. This condition leads to cold zones within the incinerator and increased emissions of partially combusted or reacted organic compounds. Most of these leaks occur in the refractory in inaccessible locations.

6.5.5.2.17 Evaluate audible air infiltration through charging area. Air infiltration through warped charging doors can lead to localized "cold" zones in the primary chamber. It can also cause some undesirable particle reentrainment and carryover into the secondary chamber. Care must be exercised in attempting to find audible leaks, since there may be moving equipment around the charge pit and since there can be fugitive pollutant emissions accumulating in the poorly ventilated areas around the primary chambers.

6.5.5.2.18 Review charging records. Available charging records should be reviewed to determine if the incinerator capacity is being exceeded and if proper charging procedures are being followed. Where charging records are not available, observation of the charging procedures over an extended period of time (1 to 2 days) may be warranted.

6.5.5.2.19 Evaluate startup and shutdown procedures. If the facility has frequent startups, the startup and shutdown procedures should be evaluated. All batch type and intermittent duty incinerators fall into this category. The emphasis should be on techniques used to maintain minimum furnace exit gas temperatures and on the criteria for beginning waste charging to the unit. Stack gas opacity should be observed to determine the duration of nonideal combustion conditions after waste charging has begun. If a problem is evident, continuous measurement of CO

and O_2 levels in the combustion gas may be warranted. Detailed startup and shutdown procedures for different types of incinerators are provided in Section 7.4.

6.6 INSPECTION OF AIR POLLUTION CONTROLS[16]

6.6.1 Inspection of Wet Scrubbers

6.6.1.1 Wet Scrubber Inspection Overview.

6.6.1.1.1 Stack.

1. Average opacity of the residual plume is observed since this provides an indication of particulate matter penetration and vapor condensation in the scrubber.

2. Short-term variations in residual opacity are an indication of variations in combustion conditions.

3. Obvious mist reentrainment is a clear indication of demister failure.

6.6.1.1.2 Induced draft fan.

1. Inspectors must be aware of severely vibrating fans downstream from wet scrubbers. The inspection is terminated immediately when this is noticed.

6.6.1.1.3 Scrubber.

1. Static pressure drop across the scrubber is used as an indirect indicator of the particulate removal effectiveness. The present value is compared with baseline values to determine if there has been a significant decrease.

2. Scrubber static pressure drop records for the time since the last inspection are reviewed to identify any operating periods with low pressure drops.

3. Scrubber vessel general physical condition is observed during the walkthrough inspection to identify any obvious physical conditions which could threaten the compliance status of the unit in the immediate future.

4. Recirculation liquor turbidity rates are observed using a small sample provided by plant personnel. High turbidities indicate greater chance of nozzle pluggage, nozzle erosion, and pipe scaling.

5. Presaturator/gas cooler liquor turbidity is observed using a small sample provided by plant personnel. Moderate turbidities indicate the potential for severe particle generation due to evaporation of the solids-containing droplets.

6. Recirculation liquor pH provides an indirect indication of the scrubber vessel's capacity to absorb acid gases. This is also important with respect to corrosion of the scrubber vessel, the recirculation tank, and the piping.

7. Scrubber vessel liquor header pressure is used as an indirect indicator of the condition of internal nozzles which cannot be seen during the inspection. Higher than baseline values may indicate pluggage.

8. Demister pressure drop is a direct indicator of partial pluggage and reduced droplet collection efficiency. The present value should be compared with baseline values.

9. Scrubber outlet gas temperature is an indicator of the adequacy of the gas-liquor distribution within the scrubber vessel. Values above adiabatic saturation suggest severe gas-liquor maldistribution.

10. Induced draft fan motor currents provide an indirect indicator of gas flow rates through the scrubber.

11. Audible air infiltration sites are noted since this contributes to scrubber vessel corrosion.

6.6.1.2 Level 4 wet scrubber inspection. The Level 4 wet scrubber inspection is a comprehensive inspection that includes all of the elements of inspection Levels 1, 2, and 3. Table 6-5 provides a matrix of the types of inspection activities included in each inspection level for air pollution control devices including wet scrubbers. The following paragraphs describe the Level 4 wet scrubber inspection activities in detail while the matrix points out differences between the different levels.

6.6.1.2.1 Prepare a system flowchart. A wet scrubber system flowchart should consist of a simple block diagram which includes the following elements:

1. Source or sources of emissions controlled by a single wet scrubber system;

2. Location(s) of any fans used for gas movement through the system (used to evaluate inhalation hazards due to positive static pressures);

3. Locations of any main stacks and bypass stacks;

4. Location of wet scrubber; and

TABLE 6-5. MATRIX OF AIR POLLUTION CONTROL DEVICE INSPECTION ACTIVITIES ASSOCIATED WITH INSPECTION LEVELS 1, 2, 3, AND 4

Inspection activity/equipment	Level 4	Level 3	Followup Level 2	Basic Level 2	Level 1	Text reference
Wet scrubbers						
1. Evaluate wet scrubber visible emissions	x	x	x	x	x	6.6.1.1.1.
2. Prepare system flowchart	x					6.6.1.2.1
3. Identify potential safety problems	x	x	x	x	x	6.3.2
4. Evaluate locations for measurement ports	x					6.3.3
5. Modify standard inspection checklists	x					6.3.9
6. Inspect for droplet reentrainment						6.6.1.2.6
a. Check for rainout of droplets adjacent to the stack	x	x	x	x		
b. Check for moisture/stains on adjacent support columns/tanks/stacks	x	x	x	x		
c. Mudlip at stack discharge	x	x	x	x		
7. Evaluate liquor inlet pressure	x	x	x	x		6.6.1.2.8
8. Induced-draft fan						6.6.1.2.5
a. Check fan for vibration	x	x	x	x		
b. Check fan motor current	x	x	x			
9. Scrubber liquor pH						6.6.1.2.11
a. Review routine pH meter calibration records	x	x	x			
b. If meter properly calibrated, observe previous months' data	x	x	x			
c. Measure scrubber outlet liquor pH	x	x				
10. Scrubber liquor flow rate						6.6.1.2.12
a. Record liquor flow rate from available monitor	x	x	x	x		
b. Record pump discharge pressure from gauge	x	x	x	x		
c. Record nozzle header pressure from gauge	x	x	x	x		
11. Scrubber static pressure drop						6.6.1.2.7
a. Record scrubber static pressure readings from available monitor	x	x	x	x		
b. Measure scrubber static pressure drop from available monitor	x	x				
12. Record demister static pressure drop from available monitor	x	x	x			6.6.1.2.14
13. Measure outlet gas temperature	x	x				6.6.1.2.16
14. Evaluate general physical condition of:						6.1.2.15
a. Wet scrubber system	x	x	x	x		
b. Packed beds	x	x	x			
c. Venturi throat dampers	x	x	x			
d. Transmissometer	x	x	x	x		
e. Sulfur dioxide monitor	x	x	x	x		
f. Nitrogen oxides monitor	x	x	x	x		
g. Hydrogen chloride monitor	x	x	x	x		
15. Observe turbidity of:						
a. Scrubber inlet liquor	x	x	x	x		
b. Presaturator/cooler liquor	x	x	x			
16. Review opacity, SO_2, NO_x, HCl monitors' emission data	x	x	x	x		
Dry scrubbers						
1. Evaluate dry scrubber visible emissions	x	x	x	x		6.6.2.1.1
2. Prepare system flowchart	x					6.6.2.2.1
3. Identify potential safety problems	x					6.3.2
4. Evaluate locations for measurement ports	x					6.3.3
5. Modify standard inspection checklists	x					6.3.9
6. Note condensing plume conditions	x	x	x	x		6.6.2.2.6
7. Record feed rates for the following systems from available monitors						6.6.2.2.8, 10, 11
a. Spray dryer absorber (calcium hydroxide)	x	x	x	x		
b. Dry injection (calium hydroxide)	x	x	x	x		
c. Semiwet/dry (calcium silicate/calcium hydroxide)	x	x	x	x		
8. Evaluate general physical condition of:						6.6.2.2.13
a. Dry scrubber	x	x	x	x		
b. Transmissometer	x	x	x	x		
c. Sulfur dioxide monitor	x	x	x	x		
d. Nitrogen oxides monitor	x	x	x	x		
e. Hydrogen chloride monitor	x	x	x	x		
9. Record solids recycle rate on semiwet/dry systems	x	x	x	x		6.6.2.2.2
10. Record spray dryer absorber system nozzle air and slurry pressures	x	x	x	x		6.6.2.2.9

(continued)

TABLE 6-5. (continued)

Inspection activity/equipment	Level 4	Level 3	Followup Level 2	Basic Level 2	Level 1	Text reference
Dry scrubbers (continued)						
11. Wet and dry bulb temperatures						6.6.2.2.7
a. Record wet and dry bulb temperatures from available monitors	x	x	x	x		
b. Measure wet and dry bulb temperatures	x	x				
12. Review the previous 12 months' data for the following:						
a. Opacity	x	x	x			
b. Spray dryer absorber approach-to-saturation (wet/dry bulb temperatures)	x	x	x			
c. Spray dryer absorber reagent feed rate	x	x	x			
d. Slaker slurry outlet temperature	x	x	x			
e. Spray dryer absorber slurry flow rate and density monitor maintenance records	x	x	x			
f. Spray dryer absorber inlet gas temperature	x	x	x			
g. Dry injection system feed rate	x	x	x			
h. Semiwet/dry calcium silicate/calcium hydroxide feed rate	x	x	x			
13. Measure spray dryer absorber/dry injection system inlet temperature	x	x				6.6.2.2.16
14. Review opacity, SO_2, NO_x, and HCl monitors' emission data	x	x	x	x		6.6.2.1.2
Fabric filters						
1. Evaluate fabric filter visible emissions	x	x	x	x	x	6.6.3.1.1, 2
2. Prepare system flowchart	x					6.6.3.2.1
3. Prepare compressed-air system flowchart	x					6.6.3.2.2
4. Evaluate locations for measurement ports	x					6.3.3
5. Identify potential safety problems	x	x	x	x	x	6.3.2
6. Modify standard inspection checklist	x					6.3.9
7. Evaluate startup/shutdown procedures	x					6.6.3.2.4
8. Evaluate puffing conditions	x	x	x	x		6.6.3.2.7
9. Evaluate condensing plume conditions	x	x	x	x		6.6.3.2.8
10. Evaluate physical condition of:						6.6.3.2.10
a. Fabric filter	x	x	x	x		
b. Transmissometer	x	x	x	x		
c. Sulfur dioxide monitor	x	x	x	x		
d. Nitrogen oxides monitor	x	x	x	x		
e. Hydrogen chloride monitor	x	x	x	x		
11. Evaluate fabric filter clean-side conditions	x	x	x	x		6.6.3.2.1
12. Evaluate compressed-air cleaning system	x	x	x			6.6.3.2.12
13. Confirm operation of cleaning equipment controllers	x	x	x			6.6.3.2.15
14. Evaluate fabric performance						
a. Perform fabric rip test	x	x	x			6.6.3.2.18
b. Evaluate bag failure records	x	x	x			6.6.3.2.9
15. Evaluate bag cages			x			
16. Static pressure drop	x	x				
a. Record static pressure drop from available monitor	x	x	x	x		
b. Measure static pressure drop	x	x				
17. Gas temperatures						6.6.3.2.14, 15
a. Record inlet and outlet gas temperatures from available monitors	x	x	x			
b. Review fabric filter temperature records	x	x	x			
c. Measure inlet and outlet gas temperatures	x	x				
18. Measure inlet/outlet oxygen levels	x	x				6.6.3.2.19
19. Review opacity, SO_2, NO_x and HCl monitor's data	x	x	x	x		

5. Locations of major instruments (pH meters, static pressure gauges, thermocouples, liquor flow meters).

6.6.1.2.2 Identify potential safety problems. The identification of potential safety problems is addressed in Section 6.3.2.

6.6.1.2.3 Evaluate locations for measurement ports. The evaluation of locations for measurement ports is discussed in Section 6.3.3.

6.6.1.2.4 Evaluate the wet scrubber visible emissions. The evaluation of visible emissions is discussed in Section 6.3.4.

6.6.1.2.5 Observe induced-draft fan vibration. If the fan downstream of the scrubber vessel is vibrating severely, the inspection should be terminated at once and responsible plant personnel should be advised of the condition. Fans can disintegrate due to fan wheel corrosion, fan wheel solids buildup, bearing failure, and operation in an unstable aerodynamic range. All of these are possible downstream of the wet scrubber. Shrapnel from the disintegrating fan can cause fatal injuries.

6.6.1.2.6 Evaluate droplet reentrainment. Droplet reentrainment indicates a significant demister problem which can create a local nuisance and which can affect stack sampling results. The presence of droplet reentrainment is indicated by the conditions listed below:

1. Obvious rainout of droplets in the immediate vicinity of the stack;

2. Moisture and stains on adjacent support columns, tanks, and stacks; and

3. Mud lip around the stack discharge.

6.6.1.2.7 Measure the wet scrubber static pressure drop. The static pressure drop is directly related to the effectiveness of particle impaction for particle capture. Generally, the particulate removal efficiency increases as the static pressure drop increases. The steps in measuring the static pressure drop are described below.

1. Locate safe and convenient measurement ports. In some cases it may be possible to temporarily disconnect the onsite gauge in order to use the portable static pressure gauge. It also may be possible to find small ports in the ductwork ahead of and after the scrubber vessel.

2. Clean any deposits out of the measurement ports.

3. If the inlet and outlet ports are close together, connect both sides of the static pressure gauge to the ports and observe the static pressure for a period of 1 to 5 minutes.

4. If the ports are not close together, measure the static pressure in one port for 10 to 30 seconds and then proceed to the other port for 10 to 30 seconds. As long as the static pressure drop is reasonably stable (the typical condition) then the two values can be subtracted to determine the static pressure drop.

5. Under no circumstances should onsite instruments be disconnected without the explicit approval of responsible plant personnel. Also, instruments connected to differential pressure transducers should not be disconnected.

If a portable pressure gauge is unavailable, the wet scrubber static pressure drop should be recorded if the onsite gauge appears to be working properly. The following items should be checked to confirm the adequacy of the onsite gauge.

1. The gauge "face" should be clear of obvious water and deposits; and

2. The lines leading to the inlet and outlet of the scrubber appear to be intact.

If there is any question concerning the gauge, ask plant personnel to disconnect each line one at a time to see if the gauge responds. If it does not move when a line is disconnected, the line may be plugged or the gauge is inoperable. Note: the lines should only be disconnected by plant personnel and only when this will not affect plant operations.

Wet scrubber systems operate with a wide range of static pressure drops as indicated in the list below.

Packed bed--2 to 6 in. w.c.

Venturi--10 to 40 in. w.c.

It should also be noted that there is a wide range of required static pressure drops for identical wet scrubbers operating on similar industrial processes due to the differences in particle size distributions. For these reasons, it is preferable to compare the present readings with the baseline values for this specific source.

Increased static pressure drops generally indicate the following possible condition(s).

1. Packed-bed scrubbers
   - High gas flow rates
   - Partial bed pluggage
2. Venturi scrubbers
   - High gas flow rate
   - High liquor flow rates
   - Constricted venturi throats
   - Misadjustment of variable throat activator

Decreased static pressure drops generally indicate the following possible condition(s).

1. Packed-bed scrubbers
   - Low gas flow rates
   - Bed collapse
2. Venturi scrubbers
   - Low gas flow rate
   - Low liquor flow rates
   - Eroded venturi dampers
   - Increased venturi throat openings
   - Misadjustment of variable throat activator

6.6.1.2.8 Evaluate the liquor inlet pressure. The pressure of the header which supplies the scrubber spray nozzle can provide an indirect indication of the liquor flow rate and the nozzle condition. When the present value is lower than the baseline value(s) the liquor flow rate has increased and there is a possibility of nozzle orifice erosion. Conversely, if the present value is higher than the baseline value(s) the liquor flow rate has decreased and nozzle and/or header pluggage is possible.

Unfortunately, these pressure gauges are very vulnerable to error due to solids deposits and corrosion. It is difficult to confirm that these are working properly. For these reasons, other indicators of low liquor flow such as the pump discharge pressure and the outlet gas temperature should be checked whenever low header or pipe pressures are observed.

6.6.1.2.9 Evaluate the wet scrubber system general physical conditions. While walking around the wet scrubber system and its inlet and outlet ductwork, check for obvious corrosion and erosion. If any material damage is evident, check for fugitive emissions (positive pressure systems) or air infiltration (negative pressure systems). Avoid inhalation hazards and walking hazards while checking the scrubber system general physical condition. Prepare a sketch showing the locations of the corrosion and/or erosion damage. In addition to corrosion and erosion, inspectors should also check for any of the conditions listed below.

1. Cracked or worn ductwork expansion joints;
2. Obviously sagging piping; and
3. Pipes which cannot be drained and/or flushed.

6.6.1.2.10 Evaluate the liquor turbidity. Ask a responsible and experienced plant representative to obtain a sample of the liquor entering the scrubber vessel. This can usually be obtained at a sample tap downstream from the main recirculation pump. The agency inspector should provide a clear sample bottle. Observe the turbidity of the liquor for a few seconds immediately after the sample is taken. The turbidity should be qualitatively evaluated as clear, very light, light, moderate, heavy, or very heavy.

On some hospital incinerators, the inlet gas temperature may be reduced prior to entry to the scrubber. This may be done by means of a presaturator immediately upstream of the scrubber vessel. There is the potential for small particle formation as the droplets containing solids evaporate to dryness. The turbidity of the liquor used in the presaturator should be very low to avoid this condition.

6.6.1.2.11 Measure the scrubber outlet liquor pH. Prior to obtaining a liquor sample, warm up the portable pH meter and check it using at least two different fresh buffer solutions which bracket the normal liquor pH range. Then request a responsible and experienced plant representative to obtain a sample of the scrubber outlet liquor. Measure the liquor pH as soon as possible after obtaining the sample so that the value does not change due to dissolution of alkaline material or due to ongoing reactions. Compare this to the baseline value(s).

If the inspector does not have a portable pH meter, the pH may be checked by using the following steps. Locate the onsite pH meter(s). Permanently mounted units are generally in the recirculation tank or in the liquor outlet lines from the scrubber vessel. Confirm that the instrument is working properly by reviewing the routine calibration records. In some cases, it is possible to watch plant personnel calibrate these instruments during the inspection.

If the pH meter(s) appears to be working properly, review the pH data for at least the previous month. In units with instruments on the outlet and the inlet, the outlet values are often 0.5 to 2.0 pH units lower due to the adsorption of carbon dioxide, sulfur dioxide, hydrogen chloride, and other acid gases. Generally, all of the pH measurements should be within the range from 5.5 to 10.0. Furthermore, any significant shifts in the pH values from baseline conditions can indicate acid gas removal problems and corrosion problems.

Corrosion can be severe in most systems when the pH levels are less than 5.5. Also, high chloride concentrations accelerate corrosion at low pH levels. Precipitation of calcium and magnesium compounds at pH levels above 10 can lead to severe scaling and gas-liquor maldistribution.

6.6.1.2.12 Evaluate the scrubber liquor recirculation rate. One frequent cause of scrubber emission problems is inadequate liquor recirculation rate. Unfortunately, many commercial types of liquor flow monitors are subject to frequent maintenance problems and many small systems do not have any liquor flow meters at all. For these reasons, a combination of factors are considered to determine if the scrubber liquor recirculation rate is much less than the baseline level(s). These factors include the following:

1. Liquor flow meter (if available, and if it appears to be working properly);
2. Pump discharge pressure (higher values indicate lower flow);
3. Pump motor current (lower values indicate lower flow);
4. Nozzle header pressure (higher values indicate lower flow);
5. Scrubber exit gas temperature (higher values indicate lower flow); and

6. Quantity of liquor draining back into recirculation tank or pond (lower flow rates indicate lower recirculation rates).

6.6.1.2.13 Evaluate fan motor currents. Changes in gas flow rate occur routinely in most incinerators due to variations in charging rates and waste heating values. Information concerning gas flow rate changes is necessary when evaluating changes in the scrubber static pressure drop.

Check the scrubber system fan motor current. Correct the fan motor current to standard conditions using the equation below.

Corrected current = [actual current]x[(gas temp.+460)/520]

An increase in the fan motor current indicates an increase in the gas flow rate.

6.6.1.2.14 Evaluate demister conditions. The static pressure drop across the demister should be noted and compared with the baseline values. An increase in the pressure drop normally is due to deposits which partially plug the demister vanes. The static pressure drops of clean demisters are usually in the range of 1 to 2 inches of water.

6.6.1.2.15 Evaluate physical condition of scrubber packed beds and venturi throat dampers. This inspection step can be performed only when the scrubber system is out-of-service. Locate a hatch on the scrubber vessel shell which is either above or below the internal component of interest. Look for the problem listed below.

1. Packed-bed scrubbers
   - Corroded or collapsed bed supports
   - Plugged or eroded liquor distribution nozzles
2. Venturi scrubbers
   - Eroded throat dampers
   - Restricted throat damper movement due to solids deposits

Note: Safety conditions sometime preclude observations of internal conditions. Respirators and other personal protection equipment should be used even if the scrubber vessel has been purged out prior to the observations.

6.6.1.2.16 Measure the outlet gas temperatures. This measurement is conducted whenever it is necessary to determine if poor liquor-gas distribution and/or inadequate liquor flow rate is seriously reducing particulate collection efficiency. The steps in measuring the gas temperature are outlined below.

1. Locate safe and convenient measurement ports on the outlet portion of the scrubber vessel shell or on the outlet ductwork of the system. Often small ports of ¼ to ½ in. diameter are adequate.

2. Attach a grounding/bonding cable to the probe if vapor, gas, and/or particulate levels are potentially explosive.

3. Seal the temperature probe in the port to avoid any air infiltration which would result in a low reading.

4. Measure the gas temperature at a position near the middle of the duct if possible. Conduct the measurement for several minutes to ensure a representative reading. Some fluctuation in the readings is possible if the probe is occasionally hit by a liquor droplet.

5. Compare the outlet gas temperature with the baseline value(s). If the present value is more than 10°F higher, then either gas-liquor maldistribution or inadequate liquor is possible.

6.6.2 Inspection of Dry Scrubbers

6.6.2.1 Dry Scrubber Inspection Overview.

6.6.2.1.1 Stack.

1. Evaluate average opacities and puffing conditions as direct indications of particulate device operating problems.

2. The presence of a secondary plume is a direct indication of severe combustion problems or dry scrubber problems.

6.6.2.1.2 Continuous emission monitors.

Evaluate frequency and severity of excess emissions of particulate matter, hydrogen chloride, sulfur dioxide, and nitrogen oxides from monitor records.

6.6.2.1.3 Dry scrubber vessel.

1. Evaluate operating conditions which are indirectly related to the acid gas removal efficiency. Most important of these is the outlet dry bulb and wet bulb temperatures. Compare the present operating levels with baseline values.

2. Evaluate inlet gas temperatures at present and variations of this value since the last inspection. Low inlet temperatures could lead to solids buildup problems in spray dryer type system.

3. Determine if solids recycle from the absorber vessel and/or the particulate control device is being used.

4. Review records to evaluate frequency and severity of deviations from normal operating conditions.

5. Evaluate corrosion problems which could lead to future excess emission problems.

6.6.2.1.4 Alkaline reagent preparation.

1. Review maintenance records to evaluate efforts to maintain slurry feed and density instruments.

2. Evaluate slaker (if present) liquor outlet temperature as an indirect indication of the adequacy of calcium hydroxide slurry preparation.

3. Evaluate procedures used to adjust dry scrubber operation to various incinerator loads and inlet pollutant concentrations.

6.6.2.2 Level 4 Dry Scrubber Inspection. The Level 4 dry scrubber inspection is a comprehensive inspection that includes all of the elements of inspection Levels 1, 2, and 3. Table 6-5 provides a matrix of the types of inspection activities included in each inspection level for air pollution control devices including dry scrubbers. The following paragraphs describe the inspection activities in detail and the matrix points out differences between the different levels.

6.6.2.2.1 Dry scrubber and process system flowchart. A dry scrubber system flowchart should consist of a simple block diagram that includes the following elements.

1. Source(s) of emissions controlled by the system;

2. Location(s) of any fans and blowers used for gas movement and solids conveying;

3. Locations of any main stacks and bypass stacks;

4. Alkali preparation equipment, adsorber vessel or contactor, particulate control device, and recycle streams; and

5. Locations of major process instruments and gas stream continuous monitors.

6.6.2.2.2 Identify potential safety problems. The identification of potential safety problems is addressed in Section 6.3.2.

6.6.2.2.3 Evaluate locations for measurement ports. Evaluation of locations for measurement ports is discussed in Section 6.3.3.

6.6.2.2.4 Startup and shutdown procedures. The startup and shutdown procedures used at the plant should be discussed to confirm the following.

1. The plant has taken reasonable precautions to minimize the number of startup/shutdown cycles.

2. The dry scrubber is started up in a reasonable time after startup of the process equipment. Inspectors should remember that starting the atomizer (in spray dryer type systems) when the inlet gas temperatures are low can lead to absorber vessel deposits.

6.6.2.2.5 Dry scrubber system visible emissions. The evaluation of visible emissiions is discussed in Section 6.3.4.

6.6.2.2.6 Condensing plume conditions. Condensing plume conditions in dry scrubber systems are unusual since most vapor state species which could cause such plumes are partially removed. The presence of a condensing plume would indicate a major malfunction of the dry scrubber system.

The principal characteristics of a condensing plume include a bluish-white color, opacities which are higher when the weather is cold or very humid, a low opacity at the stack discharge, and increasing opacities in the first few seconds of plume travel.

6.6.2.2.7 Spray dryer absorber approach-to-saturation. One of the most important operating parameters affecting the efficiency of a wet-dry type dry scrubber is the approach-to-saturation. This is simply the difference between the wet bulb and dry bulb temperatures measured at the exit of the spray dryer vessel. The normal approach-to-saturation varies between 90° and 180°F. The approach-to-saturation is monitored continuously by a set of dry bulb and wet bulb temperature monitors. A change in this value is sensed by the automatic control system which either increases or decreases the slurry feed rate to the atomizer.

If there is significant question concerning the ability of the dry scrubber system to maintain proper operation on a long-term basis, the approach-to-saturation values indicated on the dry scrubber system daily operating log sheets should be checked. Values much higher than baseline values or permit stipulations indicate chronic problems such as:

1. *Fouled absorber vessel temperature instruments;*
2. Corrosion/scaling of absorber vessel atomizer;

3. Corrosion/scaling of absorber gas dispersion equipment;

4. Low absorber vessel inlet gas temperatures during low load periods;

5. Nozzle erosion or blockage; and

6. Slurry supply line scaling.

Due to the vulnerability of the temperature monitors to scaling and blinding, inspectors may find that some plants must occasionally bypass the automatic process control system and operate manually for limited time periods. Manual operation generally means slightly worse approach-to-saturation values so that operators have a margin for error when sudden process changes occur such as load changes. Gradually plants should be able to increase the reliability of the temperature monitors by relocation of the sensors and by improved operation of the dryer.

Spray dryer absorber vessel dry bulb and wet bulb outlet gas temperature measurements are taken if there is a significant question concerning the adequacy of the onsite gauges and if there are safe and convenient measurement ports between the absorber vessel and the particulate control device. The measurements should be made at several locations in the duct to ensure that the values observed are representative of actual conditions. The values should be averaged and compared with the value indicated by the onsite instruments (if operational) and with baseline data sets. It should be noted that it is rarely necessary to make this measurement since the onsite gauges are a critical part of the overall process control system for the dry scrubber system. Failure to maintain these instruments drastically increases the potential for absorber vessel wall deposits and increased emissions. These temperature monitors are normally very well maintained.

6.6.2.2.8 Spray dryer absorber reagent feed rates. The calcium hydroxide (or other alkali) feed rates are important since they partially determine the stoichiometric ratio between the moles of reagent and the moles of acid gas. Low stoichiometric ratios result in reduced collection efficiencies. Higher than needed stoichiometric ratios use excessive reagent and may result in poor drying of the sorbent.

The reagent feed rate is generally determined using a magnetic flow meter on the slurry supply line to the atomizer feed tank. The slurry

density, another important operating parameter, is monitored by a nuclear-type density monitor. Typical slurry densities are in the range of 5 to 20 percent by weight. It should be noted that both the magnetic flow meter and the nuclear density meter are vulnerable to scaling due to the nature of the slurry.

Another way to determine the reagent feed rate is to record the feed rates of new pebble lime and recycled solids indicated by the weigh belt feeders. The weigh belt for the pebble lime is between the lime storage silo and the slaker. The weigh belt feeder for the recycled solids is close to the spray dryer absorber vessel.

The feed rates of makeup pebble lime and recycle solids are generally indicated on the daily operating logs of the dry scrubber system. Values for the last 12 months should be compared with the corresponding combustion load data to determine if significant changes in the overall reagent stoichiometric ratios have occurred. Data concerning the system load must be obtained from the combustion system daily operating log sheets. If available, dry scrubber system inlet sulfur dioxide concentrations also should be used in this qualitative evaluation of reagent/acid gas stoichiometric ratios.

6.6.2.2.9 Spray dryer absorber nozzle air and slurry pressures. For units equipped with nozzles rather than rotary atomizers, the air pressures and slurry pressures should be recorded and compared with baseline levels. Some variation in the slurry pressures are necessary in order to maintain proper approach-to-saturation values during combustion system load variations.

6.6.2.2.10 Dry injection system feed rates. The long-term performance of the calcium hydroxide supply system should be checked if the emissions data indicates occasional emission excursions. The feed rate of calcium hydroxide to the pressurized pneumatic system is generally monitored by either a weigh belt feeder or a volumetric screw-type feeder. Both of these feeders are located close to the calcium hydroxide storage silos, and the feed rates are generally indicated on the main system control panel. The feed rate data for the previous 12 months provided by the weigh belt feeder or the volumetric screw feeder should be compared against the combustion system loads and against the inlet acid

gas concentration monitors (when available). The automatic control system should be able to vary calcium hydroxide (or other alkali) addition rates with load variations and inlet gas acid gas concentrations. Decreased reagent feed rates indicate possible reductions in the stoichiometric ratio and thereby a reduction in acid gas collection effectiveness. The blower motor currents and the pneumatic line static pressures also should be recorded and checked against baseline data sets. Higher motor currents and higher conveying line static pressures indicate increases in the airflow rates.

6.6.2.2.11 Calcium silicate feed rates. The Research Cottrell semiwet/dry system utilizes a calcium silicate/calcium hydroxide dry injection system downstream from the calcium hydroxide spray dryer absorber. The feed rate of calcium silicate/calcium hydroxide is monitored by weigh belt feeders or volumetric screw conveyors. The variability and reliability of the calcium silicate/ calcium hydroxide dry injection system in Research-Cottrell systems should be evaluated by reviewing the daily system operating logs. Some loss in acid gas collection efficiency could occur if feed rates were low.

6.6.2.2.12 Control device solids recycle rates. The Teller semiwet/dry system utilizes a recycle stream from the fabric filter in order to improve overall reagent utilization. The solids recycle rate during the inspection should be recorded and compared to baseline values.

The recycle rates used in the Research-Cottrell semiwet/dry type systems have some impact on the overall acid gas collection efficiency. Low recycle rates indicate slightly reduced acid gas collection efficiency.

6.6.2.2.13 Dry scrubber system general physical conditions. While walking around the dry scrubber and its inlet and outlet ductwork, check for obvious corrosion around the potential cold spots such as the bottom of the absorber vessel and the particulate control device hoppers and around the access hatches. Check for audible air infiltration through the corroded areas, warped access hatches, and eroded solids discharge valves.

6.6.2.2.14 Slaker slurry outlet temperatures during past 12 months. The slaker slurry outlet temperature provides a rough indication of the adequacy of the conversion from lime (calcium oxide) to

calcium hydroxide. The temperatures should be compared to baseline values. Improper slaking can result in poor reagent reactivity and reduced acid gas collection efficiency.

6.6.2.2.15 Spray dryer absorber slurry flow rate and density monitor maintenance records. The calcium hydroxide slurry monitors generally consist of a magnetic flow meter and a nuclear density meter. Both of these are sensitive to scaling especially when slurry densities are high. The plant should have maintenance records for the monitors either in the form of completed work orders, a computerized maintenance record, an instrument maintenance log, or notes on the daily dry scrubbing operations log. The records should be reviewed for the previous 12 months whenever there is concern that there are periods of low slurry supply to the atomizer.

6.6.2.2.16 Dry scrubber inlet gas temperatures. Dry scrubbing systems have a limited turndown capability due to the need for complete drying of the atomized slurry. Low gas inlet temperatures during periods of low combustion system load can cause poor drying of the droplets. The process control system is generally designed to block atomizer operation once inlet temperature drops below a preset value. The inlet gas temperature data should be reviewed to confirm that the controller is working properly, since operation under these conditions could lead to absorber vessel deposits and nonideal operation once loads increase. The inlet temperature data may be available on the dry scrubber system daily operating logs, the archived continuous strip charts, or on the computerized data acquisition file.

When the onsite gauge is not available, is malfunctioning, or is in a potentially nonrepresentative location, the spray dryer absorber vessel or dry injection system inlet gas temperature should be measured with a portable thermocouple and monitor. For spray dryers, the measurement should be taken in the main duct leading to the atomizer or in one or more of the ducts that lead to the gas dispersion system within the vessel. For dry injection systems, the measurement should be taken upstream of the gas stream/reagent mixing point (such as the venturi contactor). The measurements should be taken at several locations in the duct and averaged. Locations near air infiltration sites should be avoided.

6.6.3 Inspection of Fabric Filters

6.6.3.1 Fabric Filter Inspection Overview.

6.6.3.1.1 Stack.

1. Observe the average opacity and puffing conditions as a direct indication of fabric filter performance.

2. Observe any secondary plume conditions since these indicate a serious combustion problem and/or dry scrubbing problem.

6.6.3.1.2 Transmissometer.

1. Evaluate transmissometer physical condition prior to reviewing opacity data.

2. Observe average opacity at the present time and for the last 8 hours to determine the representativeness of the inspection period.

3. Review average opacity records since the last inspection to determine the frequency and severity of excess emission problems.

6.6.3.1.3 Fabric filter.

1. Evaluate fabric filter pressure drop as an indirect indication of bag blinding problems, bag cleaning problems, and gas flow changes.

2. Observe fabric filter physical condition as an indirect indication of corrosion and air filtration.

3. Evaluate present inlet gas temperature to confirm that it does not exceed the high temperature limitations of the fabric being used. Review inlet gas temperature records since the last inspection to determine frequency and severity of gas temperature excursion.

4. Evaluate fabric filter outlet gas temperatures as an indication of air infiltration and possible fabric chemical attack. The outlet temperature should be at least 20°F above the acid dewpoints. The gas temperature difference across the fabric filter should be only 20° to 50°F depending on ambient temperature, ambient wind speed, and the adequacy of fabric filter insulation.

5. Listen for audible air infiltration around access hatches, hoppers, and expansion joints.

6. Evaluate cleaning system operation to confirm that the bags are being cleaned on a regular frequency and to identify any possible bag problems due to nonideal cleaning conditions.

7. Observe clean side conditions on units in which one or more compartments can be isolated. Solids deposits are an indication of emission problems. Physical condition of the bags and other components are also observed to the extent possible without entering the fabric filter.

8. Review bag failure rate and location records as a indirect indication of fabric filter excess emission problems and of misguided maintenance efforts.

9. Perform or observe "rip" tests (described below) as a rough indicator of the reasons for frequent bag failures.

10. Observe cage conditions (pulse jet only) to determine possible reasons for frequent bag failures.

6.6.3.2 Level 4 Fabric Filter Inspection

The Level 4 fabric filter inspection is a comprehensive inspection that includes all of the elements of inspection Levels 1, 2, and 3. Table 6-5 provides a matrix of the types of inspection activities included in each inspection level for air pollution control devices including pulse-jet fabric filters. The following paragraphs describe the Level 4 pulse-jet fabric filter inspection activities in detail while the matrix points out differences between the different levels.

6.6.3.2.1 Prepare a system flowchart. A fabric filter system flowchart should consist of a simple block diagram that includes the following elements.

1. Source(s) of emissions controlled by a single fabric filter;

2. Location(s) of any fans used for gas movement through the system (used to evaluate inhalation problems due to positive static pressures);

3. Locations of any main stacks and bypass stacks;

4. Location of fabric filter; and

5. Locations of major instruments (transmissometers, static pressure gauges, thermocouples).

6.6.3.2.2 Prepare a flowchart of the compressed air system. The purpose of the flowchart is to indicate the presence of compressed air system components that could influence the vulnerability of the pulse jet fabric filter to bag cleaning problems. The flowchart should consist of a simple block diagram showing the following components.

1. Source of compressed air (plant air or compressor);
2. Air drier (if present);
3. Oil filter (if present);
4. Main shutoff valve(s);
5. Compressed air manifolds on fabric filter;
6. Drains for manifolds and compressed air lines;
7. Heaters for compressed air lines and manifolds; and
8. Controllers for pilot valves (timers or pneumatic sensors).

6.6.3.2.3 Evaluate locations for measurement ports. Evaluation of locations for measurement points are discussed in Section 6.3.3.

6.6.3.2.4 Evaluate startup and shutdown procedures. The startup and shutdown procedures used at the plant should be discussed to confirm the following.

1. The plant has taken reasonable precautions to minimize the number of startup/shutdown cycles.
2. The fabric filter system bypass times have been minimized.
3. The fabric filter system bypass times have not been limited to the extent that irreversible damage has occurred.

6.6.3.2.5 Identify potential safety problems. The identification of potential safety problems is addressed in Section 6.3.2.

6.6.3.2.6 Evaluate the fabric filter visible emissions. The evaluation of visible emissions is discussed in Section 6.3.4.

6.6.3.2.7 Evaluate puffing conditions (pulse jet units only). Evaluate the frequency and severity of puffs. These are often caused by small holes in one or more rows of bags.

6.6.3.2.8 Evaluate condensing plume conditions. Condensing plume conditions in fabric filters systems serving hospital waste incinerators could conceivably be caused by partially combusted organic vapors or hydrogen chloride vapors. The vaporous material condenses once the gas enters the cold ambient air. Condensing plumes usually have a bluish-white color. In some cases, the plume forms 5 to 10 feet after leaving the stack. If the fabric filter operating temperature drops substantially, this material can condense inside the fabric filter and cause fabric blinding problems. Corrective actions must focus on the incinerator or dry scrubber system.

6.6.3.2.9 Measure the fabric filter static pressure drop. Fabric filters operate with a wide range of static pressure drops (2 to 12 in. w.c.). It is preferable to compare the present readings with the baseline values for this specific source. Increased static pressure drops generally indicate high gas flow rates and/or fabric blinding and/or system cleaning problems. Lower static pressure drops are generally due to reduced gas flow rates, excessive cleaning intensities/frequencies, or reduced inlet particulate loadings. The steps in measuring the stack pressure with a portable pressure drop gauge are described below.

1. Locate safe and convenient measurement ports on the inlet and outlet ductwork or on the fabric filter shell. In some cases it may be possible to temporarily disconnect the onsite gauge in order to use the portable gauge.

2. Clean any deposits out of the measurement ports.

3. If the inlet and outlet ports are close together, connect both sides of the static pressure gauge to the ports and observe the static pressure for 1 to 5 minutes.

4. If the ports are not close together, measure the static pressure in one port for 10 to 30 seconds and then proceed to the other port for 10 to 30 seconds. As long as the static pressure drop is stable the two values can be subtracted to determine the stack pressure drop.

5. Under no circumstances should onsite plant instruments be disconnected without the explicit approval of responsible plant personnel. Also, instruments connected to differential pressure transducers should not be disconnected.

If the inspector does not have a portable pressure gauge, the fabric filter static pressure drop should be recorded if the gauge appears to be working properly. The gauge face should be clear of obvious water and deposits. The gauge should fluctuate slightly each time one of the diaphragm valves activates. These valves can be heard easily when close to the pulse jet fabric filter. If there is any question about the gauge, ask plant personnel to disconnect each line one at a time to see if the gauge responds. If it does not move when a line is disconnected, the line may be plugged or the gauge inoperable.

6.6.3.2.10 Evaluate fabric filter general physical conditions. While walking around the fabric filter and its inlet and outlet ductwork, check for obvious corrosion around the potential "cold" spots such as the corners of the hoppers, near the solids discharge valve, and the access hatches. On negative pressure fabric filters, check for any audible air infiltration through the corroded areas, warped access hatches, eroded solids discharge valves, or other sites. On positive pressure fabric filters, check for fugitive emissions of dust from any corroded areas of the system.

6.6.3.2.11 Evaluate the clean side conditions when possible. If there is any question about the performance of the fabric filter, request that plant personnel open one or more hatches on the clean side (not available on some commercial models). Note the presence of any fresh dust deposits more than 1/8 in. deep since this indicates particulate emission problems.

In the case of pulse jet fabric filters, also observe the conditions of the bags, cages, and compressed air delivery tubes. The compressed air delivery tubes should be oriented directly into the bags so that the sides of the bags are not subjected to the blast of cleaning air. The cages and bags should be securely sealed to the tube sheet in units where the bag comes up through the tube sheet. There should be no oily or crusty deposits at the top of the bags due to oil in the compressed air line.

In some cases , operators will be unable to isolate any compartments without causing major gas flow problems with the incinerator and/or the dry scrubber. Obviously, the request to check clean side conditions should be withdrawn under such circumstances.

6.6.3.2.12 Evaluate compressed air cleaning system. The purpose of checking the compressed air cleaning system is to determine if this contributes to a significant shift in the fabric filter static pressure drop and/or if this contributes to an excess emission problem. The inspection procedures for the compressed air cleaning system can include one or more of the following.

1. Record the compressed air pressure if the gauge appears to be working properly. It should fluctuate slightly each time a diaphragm valve is activated. Do not remove this valve since the compressed air lines and manifold have high pressure air inside.

2. Listen for operating diaphragm valves. If none are heard over a 10 to 30 minute time period, the cleaning system controller may not be operating.

3. Check the compressed air shutoff valve to confirm that the line is open.

4. Count the number of diaphragm valves that do not activate during a cleaning sequence. This can be done by simply listing for diaphragm valve operation. Alternatively, the puff of compressed air released from the trigger lines can sometimes be felt at the solenoid valve (pilot valve) outlet.

5. Check for the presence of a compressed air drier. This removes water which can freeze at the inlet of the diaphragm valves. Also check for compressed air oil filter.

6. Check for a drain on the compressed air supply pipe or on the air manifold. This is helpful for routinely draining the condensed water and oil in the manifold.

6.6.3.2.13 Confirm operation of cleaning equipment controllers. Observe the fabric filter control panel during cleaning of one or more compartments to confirm that the controller is operating properly. Each compartment should be isolated for cleaning before the static pressure drop increases to very high levels that preclude adequate gas flow. Also, cleaning should not be so frequent that the bags do not build up an adequate dust cake to ensure high efficiency filtration.

6.6.3.2.14 Measure inlet and outlet gas temperature. The primary purpose of determining the present gas inlet temperture is to evaluate possible excess emission problems and/or high bag failure rate conditions that can be caused by very high or very low gas inlet temperatures.

These measurements are conducted whenever it is necessary to determine if air infiltration is causing fabric chemical attack due to reduced gas outlet temperatures. A large difference between the baseline temperature and the temperature measured during a subsequent inspection is an indication that air infiltration is a problem. It also is helpful to measure the inlet gas temperature to evaluate the potential for high gas temperature damage to the bags. The average inlet gas temperature should be 25° to 50°F below the maximum rated temperature limit of the fabric.

Fifteen to 30 minute spikes of less than 25°F above the maximum rated limit can usually be tolerated without fabric damage. The average inlet gas temperature should be 25° to 50°F above the acid gas dewpoint temperature. For most commercial combustion processes, the acid dewpoint is usually between 225° to 300°F. The inlet gas temperature also should be above the water vapor dewpoint. The steps in measuring the gas temperature are outlined below.

1. Locate safe and convenient measurement ports on the inlet and outlet ductwork of the collector. Often small ports less than ¼ in. diameter are adequate. Measurements using ports on the fabric filter shell often are inadequate since moderately cool gas is trapped against the shell.

2. Attach a grounding/bonding cable to the probe if vapor, gas, and/or particulate levels are potentially explosive.

3. Seal the temperature probe in the port to avoid any air infiltration that would result in a low reading.

4. Measure the gas temperature at a position near the middle of the duct if possible. Conduct the measurement for several minutes to ensure a representative reading.

5. Measure the gas temperature at another port and compare the values. On combustion sources, a gas temperature drop of more than 20° to 40°F indicates severe air infiltration.

6. Compare the inlet gas temperature with the maximum rated temperature limit of the fabric present. If the average gas temperature is within 25° to 50°F of the maximum, short bag life and frequent bag failures are possible. Also, if there are short-term excursions more than 25° to 50°F above the maximum temperature limits, irreversible fabric damage may occur.

Locate any onsite thermocouples mounted on the inlet to the fabric filter. If this instrument appears to be in a representative position, record the temperature value displayed in the control room.

6.6.3.2.15 Evaluate the fabric filter gas temperature records. The purpose of reviewing continuous temperature recorder data is to determine if temperature excursions contribute to excess emission problems and/or high bag failure rates. Review selected strip charts to determine if the

gas inlet temperatures have been above the maximum rated fabric temperature or below the acid vapor or water vapor dewpoints.

6.6.3.2.16 Perform fabric rip test and review fabric laboratory analyses. The purpose of evaluating fabric condition is to determine if any corrective actions planned by the owner/operators have a reasonable probability of reducing frequent excess emissions.

To perform a rip test, ask the plant personnel for a bag that has been recently removed from the fabric filter. Attempt to rip the bag near the site of the bag hole or tear. If the bag cannot be ripped easily, then the probable cause of the failure is abrasion and/or flex damage. These bags can usually be patched and reinstalled. If the bag can be ripped easily, then the fabric has been weakened by chemical attack or high temperature damage. Weakened bags should not be patched and reinstalled. It may be necessary to install new bags throughout the entire chamber if the bag failure rates are high.

6.6.3.2.17 Evaluate bag failure records. The purpose of reviewing bag failure records is to determine the present bag failure rate and to determine if the rate of failure is increasing. Plot the number of bag failures per month for the last 6 to 24 months. If there has been a sudden increase, the owner/operators should consider replacing all of the bags in the compartment(s) affected. If there is a distinct spatial pattern to the failures, the owner/operators should consider repair and/or modification of the internal conditions causing the failures.

6.6.3.2.18 Evaluate the bag cages. The bag cages are evaluated whenever there are frequent abrasion/flex failures at the bottoms of the bags or along the ribs of the cage. Ask the plant personnel to provide a spare cage for examination. There should be adequate support for the bag and there should not be any sharp edges along the bottom cups of the cage. Also check the cages for bows that would cause rubbing between two bags at the bottom of the fabric filter.

6.6.3.2.19 Evaluate the inlet and outlet gas oxygen levels. These measurements are performed to further evaluate the extent of air infiltration. An increase of more than 1 percent oxygen going from the inlet to the outlet indicates severe air infiltration (e.g., inlet oxygen at 6.5 percent and outlet oxygen at 7.5 percent). The steps involved in measuring the flue gas oxygen levels are itemized below.

1. Locate safe and convenient measurement ports. Generally, the ports used for the temperature measurements are adequate for the oxygen measurements.

2. Attach a grounding/bonding cable to the probe if there are potentially explosive vapors, gases, and/or particulate.

3. Seal the probe to prevent any ambient air infiltration around the probe.

4. Measure the oxygen concentration at a position near the center of the duct to avoid false readings due to localized air infiltration. The measurement should be repeated twice in the case of gas absorption instruments. For continuous monitoring instruments, the measurement should be conducted for 1 to 5 minutes to ensure a representative value.

5. If possible, measure the carbon dioxide concentration at the same locations. The sum of the oxygen and carbon dioxide concentrations should be in the normal stoichiometric range for the fuel being burned. If the sum is not in this range, a measurement error has occurred.

6. As soon as possible, complete the measurements at the other port. Compare the oxygen readings obtained. If the outlet values are substantially higher, severe air infiltration is occurring.

6.7 REFERENCES FOR CHAPTER 6

1. U. S. Environmental Protection Agency. EPA Guide for Infectious Waste Management. Office of Solid Waste. Washington, D.C. Publication No. EPA/530-SW-86-014. May 1986. p. ix.

2. Ibid. p. 3-7.

3. Hospital Waste Combustion Study: Data Gathering Phase. Final Report. U. S. Environmental Protection Agency, Office of Air Quality Planning and Standards, Research Triangle Park, North Carolina. EPA-450/3-88-017. December 1988. p. 3-10 to 3-24.

4. Ibid. p. 3-6.

5. Ibid. p. 3-20.

6. Ibid. p. 1-9.

7. Ibid. p. 3-16.

8. Ibid. p. 3-4.

9. Ibid. p. 3-20.

10. Ibid. p. 1-13.

11. McCree, R. E. Operation and Maintenance of Controlled Air Incinerators. Ecolaire Environmental Control Products, Inc. Charlotte, North Carolina.

12. Reference 3. p. 1-11, 12.

13. Reference 1. p. 3-9.

14. Reference 1. p. 3-12.

15. Reference 11. p. 10.

16. Richards, J. Municipal Waste Incinerator Field Inspection Notebook (Draft); Prepared for U.S. EPA.

7.0 SPECIAL CONSIDERATIONS

7.1 INCINERATOR OPERATOR TRAINING AND OPERATOR EXPERIENCE

The success of incineration as a technique for treating hospital waste depends on the proper operation of the incinerator and its associated air pollution control device. Proper operating techniques can affect equipment reliability, on-line availability, combustion efficiency, and regulatory compliance with air pollution regulations. The operator is in control of many of the factors that have an impact on the performance of a hospital waste incinerator and air pollution control device including: (1) waste charging procedures, (2) incinerator startup and shutdown, (3) air pollution control device startup and shutdown, (4) monitoring and adjusting operating parameters for the incinerator and air pollution control system, and (5) ash handling. Poorly trained and/or inexperienced operators have neither the knowledge nor the skills to operate the equipment properly or react appropriately to upset conditions. Therefore, the value of appropriate operator training and/or experience should be apparent to the inspector.

Typically, incinerator and air pollution control device manufacturers, once their equipment is installed, offer a hands-on operator training program that includes instruction in the proper operating procedures and the necessary preventive maintenance activities that should be performed. While this training is desirable, it is often lost when the operator decides to take another, higher paying job. Operator turnover is experienced by many hospitals and causes problems in maintaining proper operation of equipment and necessitates almost continual training of operators. Turnover and proper operation are particular problems at hospitals where housekeeping personnel operate the incinerator system because their level of understanding of the combustion process is limited, their level of commitment to proper operation is low, and the tendency to move to other, higher paying jobs is high. One solution to these problems is to create a dedicated position where one employee operates the incinerator and air pollution control device and is more highly paid than housekeeping personnel. This tends to reduce the turnover thereby producing a more experienced operator.

At most hospitals, a hospital engineer is in charge of the operation and maintenance of the incinerator. The engineer should have a good working knowledge of the incinerator and should be able to provide some operator training in the proper operational procedures. Additionally, the facility engineer should ensure that preventive maintenance activities are carried out on a regular basis to minimize operational problems and downtime. Some States have included specific requirements for operator training in proposed regulations for infectious waste incinerators.

The inspector should be aware of the above considerations. He/she should inquire as to the experience level of the operator, the amount of hands-on training the operator has received, and the availability of a hospital engineer to direct the operator as required. The inspector should evaluate whether the operator meets the necessary training requirements (where applicable).

7.2 EMERGENCY OPERATING PLAN

The permit for the incineration facility may stipulate that an emergency operating plan be developed and implemented to prevent exposure of the public or operator personnel to spills or leaks of infectious wastes. In general, most plans should include the responsible individual to be notified in case of an emergency, emergency contacts (such as fire departments) and procedures to be followed in the case of an emergency. The inspector should become familiar with the permit-stipulated requirements for an emergency operating plan prior to the inspection. During the inspection, the inspector should ask to see the plan (if applicable). The plan should be reviewed to ensure that all stipulated requirements are addressed. The inspector should also ensure that the plan is accessible to operator personnel and that they are familiar with its requirements.

7.3 CROSS-MEDIA INSPECTIONS

Hospital incinerators are potentially subject to two environmental media regulatory programs. These are air pollution and solid waste. If a wet scrubber is used for pollution control, water discharge also is of concern.

7.3.1 Air Pollution

The Agency's authority, regulations, and inspection procedures under the Clean Air Act are discussed earlier in this manual.

7.3.2 Solid Waste

7.3.2.1 Resource Conservation and Recovery Act: Section 3007 of the Resource Conservation and Recovery Act (RCRA) allows a duly authorized inspector:

1. To enter at reasonable times any establishment or other place maintained by any person where hazardous wastes are generated, stored, treated, disposed of, or transported from; and

2. To inspect and obtain samples from any person of any such waste and samples of any containers or labeling of such wastes.

As a first step in fulfilling the Congressional mandate to establish a hazardous waste management system, EPA published proposed regulations in the Federal Register on December 18, 1978, which included a proposed definition and treatment methods for infectious wastes.[1] During the public comment period for this rulemaking, EPA received approximately 60 comments which specifically addressed the infectious waste provisions of the proposed regulations.[2]

On May 19, 1980, EPA published the first phase of the hazardous waste regulations. The Agency stated in the preamble to the regulations that the sections on infectious waste would be published when work on treatment, storage, and disposal standards was completed. While the Agency has evaluated management techniques for infectious waste, considerable evidence that these wastes cause harm to human health and the environment is needed to support Federal rulemaking.[3] While EPA has not yet promulgated rules for infectious wastes, guidance on handling, treatment, and disposal of infectious wastes is provided in EPA Guide to Infectious Waste Management.[4]

7.3.2.2 State Regulations for Solid Waste. Over 25 States have passed hazardous waste legislation specifically to control the treatment, storage, and disposal of infectious waste (as part of their hazardous waste management program). Some States have already promulgated regulations controlling infectious waste, while other States are preparing such regulations. Because there is no unanimity of opinion on the hazards

posed by infectious waste and appropriate techniques for safe disposal of these wastes, control requirements vary from State to State.

7.3.3 Inspector Multimedia Responsibilities

In addition to the air pollutant emission concerns, an inspector should be cognizant of the solid waste handling requirements that may be associated with the incineration facility.

Of particular concern are wastes that may be regulated as hazardous under Subtitle C of RCRA. Table 7-1 lists the types of Subtitle C wastes (i.e., F, U, or P wastes) that may be generated at a medical facility. A facility is determined to be a hazardous waste generator if it generates more than 100 kg per calendar month of hazardous waste. The facility must comply with the requirements of 40 CFR Parts 262 through 266, 268, 270, and 124 and the notification requirements of Section 3010 of RCRA. These regulations include specific requirements for generators, transporters, and owners/operators of hazardous waste treatment, storage, and disposal facilities. These requirements also are applicable to generators of greater than 1 kg of acute hazardous waste or "P" waste per calendar month. If a facility generates 100 kg of Subtitle C waste and 1 kg or less of P waste per calendar month or less, then the facility is called a conditionally exempt small quantity generator and is not subject to the aforementioned requirements. In order to prove that a facility is a small quantity generator, it must keep detailed records of the types and quantities of hazardous waste generated, and where, when, and by whom it was disposed. However, small quantity generators are exempt from the manifest requirements for generators described in 40 CFR Part 262. In order to burn any of the Subtitle C wastes in an onsite incinerator, the incinerator must be permitted to burn the wastes under 40 CFR 270 (EPA Adminstered Permit Programs: The Hazardous Waste Permit Program) or must be licensed or permitted by the State to burn waste. The inspector should check the waste generation records and appropriate permit if he/she suspects that hazardous waste is being improperly disposed in the incinerator.

In many States, the treatment, storage, and disposal of infectious waste will be subject to State regulations or permit conditions. At the initial Level 4 inspection, the inspectors should obtain copies of any

TABLE 7-1. LIST OF HAZARDOUS WASTES THAT MAY BE GENERATED AT A MEDICAL FACILITY

F Wastes[a]	U Wastes[b]	P Wastes[c]
F003[d]	U206 - Streptozotocin	None
	U010 - Mytomycin C	
F005[e]	U150 - Melphalan	
	U059 - Daunomycin	
	U058 - Cyclophosphamide	
	U0237 - Uracil Mustard	
	U035 - Chlorambucil	
	U015 - Azeserine	
	U026 - Chlornaphazine	
	U140 - Isobutyl Alcohol	
	U151 - Mercury	
	U044 - Chloroform	
	U002 - Acetone	
	U122 - Formaldehyde	
	U220 - Toluene	
	U239 - Xylene	

[a]Hazardous wastes from nonspecific sources.
[b]Toxic hazardous wastes.
[c]Acute hazardous wastes.
[d]Scintillation wastes using xylene as a solvent would be included in this category.
[e]Scintillation wastes using toluene as a solvent would be included in this category.

State or Federal solid-waste-related permits or regulations that pertain to the incinerator waste feed material or incinerator residue ash. Prior to any subsequent inspections, the inspector should become familiar with the conditions of the permits or regulations. During the inspection, the inspector should identify any deviations from the regulations or permit conditions. These deviations should be documented in the inspection report. All supporting data or photographs should also be recorded and identified for possible followup activities. After the inspection, the inspector should report all observed environmental problems to his or her immediate supervisor for notification of the appropriate Federal or State agency.

7.4 STARTUP AND SHUTDOWN PROCEDURES FOR HOSPITAL WASTE INCINERATORS AND ASSOCIATED AIR POLLUTION CONTROL DEVICES

Because each incinerator model is designed differently, design criteria, operating parameters, and operating procedures will vary. This kind of variation applies to the startup and shutdown procedures associated with the different incinerator types. Therefore, a discussion of the proper execution of these procedures is provided below on each of the incinerator types discussed in Chapter 5. Additionally, general discussions are presented on the proper startup and shutdown procedures for wet scrubbers, dry scrubbers, and fabric filters. The inspector should be well versed in the startup and shutdown procedures for all of these types of equipment because emissions can be the highest during startup and shutdown. The inspector should observe these procedures, especially startup, during the inspection if at all possible.

Special concerns during startup include the following:

1. Assuring that all air pollution control equipment is online and properly operating prior to initiating waste charging; and

2. Assuring that the secondary combustion chamber is preheated and above a minimum acceptable operating temperature before charging (or igniting for batch feed systems) waste.

7.4.1 Batch Feed Starved-Air Incinerator

This type of incinerator, typically, is a small unit with a capacity that may range up to 500 lb/h but is more typically less than 200 lb/h. The incinerator is operated in a "batch-mode," which entails a single

charge at the beginning of the operating cycle, followed by combustion, ash burnout, cooldown, and ash removal over a 12- to 24-h period. The following sections describe the startup and shutdown procedures for a batch feed starved-air incinerator.

7.4.1.1 Startup. Startup of the incinerator actually begins with removal of the ash generated from the previous operating cycle. The following are guidelines for good operating practice:[5]

1. The incinerator should be allowed to cool sufficiently so that it is safe for the operator to remove the ash. This cooling can take as long as 8 h.

2. The operator should exercise extreme caution since the refractory may still be hot and the ash may contain local hot spots, as well as sharp objects.

3. The ash and combustion chamber should not be sprayed with water to cool the chamber because rapid cooling from water sprays can adversely affect the refractory.

4. A flat blunt shovel, not sharp objects that can damage the refractory material, should be used for cleanup.

5. Avoid pushing ash into the underfire air ports.

6. Place the ash into a noncombustable heat resistant container, i.e., metal. Dampen the ash with water to cool and minimize fugitive emissions.

7. Assure that the ash door is securely closed and the integrity of the seal is maintained after ash removal is completed.

Prior to initiating charging, operation of the ignition and secondary burners and combustion air blowers should be checked. The incinerator is charged cold. Because these units generally are small, they are usually manually loaded. The waste is loaded into the ignition chamber, which is filled to the capacity recommended by the manufacturer. Typically, the manufacturer will recommend filling the incinerator completely, but not overstuffing the chamber. Overstuffing can result in blockage of the air port to the combustion chamber and in premature ignition of the waste and poor performance (i.e., excess emissions) during startup. Overstuffing also can result in blockage of the ignition burner port and damage to the burner. After charging is completed, the charge door is closed, the seal

visually checked for irregularities, and the door is locked. Once operation is initiated, no further charges will be made until the next operating cycle is initiated, i.e., after cooldown and ash removal.

Prior to ignition of the waste, the secondary combustion chamber is preheated to a predetermined temperature by igniting the secondary burner. A minimum secondary chamber temperature of 1600°F is recommended prior to ignition of the waste. Preheat takes from 15 to 60 minutes.[11]

After the secondary chamber is preheated, the secondary combustion air blower is turned on to provide excess air for mixing with the combustion gases from the ignition chamber.

The ignition chamber combustion air blower is activated and the primary burner is ignited to initiate waste combustion. When the primary chamber reaches a preset temperature and the waste combustion is self-sustaining, the primary burner is shut down. A typical temperature is 1100°F.

The primary combustion air and secondary combustion air are adjusted to maintain the desired primary and secondary chamber temperatures. (Typically, this adjustment is automatic and can encompass switching from high to low settings or complete modulation over an operating range.)

During operation, the primary burner is reignited if the ignition chamber temperature falls below a preset temperature. Similarly, the secondary burner is reduced to its lowest firing level if the secondary chamber rises above a preset high-temperature setting. Again, control of the burners, like the combustion air, is typically automated. A barometric damper on the stack is used to maintain draft. The incinerator chambers should both be maintained under negative draft.

7.4.1.2 Shutdown. After the waste burns down and all volatiles have been released, the primary chamber combustion air level is increased to facilitate complete combustion of the fixed carbon remaining in the ash. The temperature in the primary chamber will continue to decrease indicating combustion is complete. A typical burndown period is 2 to 4 h.[6] When combustion is complete, the secondary burner is shut down.

Shutdown of the secondary burner, which initiates the cooldown period, usually is automatically controlled to occur at a preset length of time into the cycle.[6,7] The combustion air blowers are left operating to

cool the chambers prior to subsequent ash removal. The blowers are shut down when the chambers are completely cooled or prior to opening the ash door for ash removal. Cooldown typically lasts 5 to 8 h.[6]

As described in Chapter 3, appropriate safety precautions should be taken when removing ash from the incinerator including the use of protective clothing, thick rubber or plastic gloves, eye protection, and a respirator or dust mask filter. The ash should be gently removed with a rake and blunt shovel to prevent fugitive dust emissions and to prevent damage to the refractory.

The final step in the cycle is examination of ash burnout quality. Inspection of the ash is one tool the operator and inspector has for evaluating incinerator performance.

7.4.2 Intermittent-Duty, Starved-Air Incinerators

Intermittent-duty, starved-air incinerators typically are used for "shift" type operation. The incinerator must be shutdown routinely for ash removal. Hence, there is a distinct operating cycle. The main feature which distinguishes this type of incinerator from the batch incinerator is the charging procedures which are used. The charging system is designed to accommodate multiple charges safely throughout the operating cycle rather than to rely on a single batch charge at the beginning of the operating cycle. Either manual or automated charging systems can be used.

7.4.2.1 Startup. The residual ash from the previous operating cycle must be removed before a cycle can be initiated. Ash removal procedures are essentially the same as those described in Section 7.5.1.1 for batch mode incinerators.

Before the operator initiates startup, proper operation of the primary and secondary burners and combustion air blowers should be checked. The following steps are conducted during startup:

1. The primary and secondary burner(s) are ignited, and preheat of the combustion chambers is initiated;

2. The secondary chamber must reach a predetermined temperature (e.g., 1400°F) before the incinerator is ready for charging. A minimum warmup time of 30 to 60 minutes is recommended; and

3. After the predetermined secondary chamber temperature is

attained, the primary and secondary combustion air blowers are activated. The incinerator is ready to be charged.

Stable combustion can be maintained most readily with a constant thermal input to the incinerator. Feeding too much waste in a charge causes the incinerator to overload. These overloads can result in poor burndown (because of waste pile buildup on the hearth) or can cause excessive emissions because the rapid generation of volatiles overloads the capacity of the secondary chamber. Feeding too little waste results in inadequate thermal input and consequent excessive auxiliary fuel use.[5] The recommended charge frequency and quantity is 15 to 25 percent of the rated capacity (lb/h) at 10- to 15-minute intervals.[5,8] Another rule of thumb is to recharge the incinerator after the previous charge has been reduced by 50 to 75 percent in volume.[3] Charging volume and frequency will vary with waste composition, and the operator must use some judgment to determine appropriate rates. Monitoring the temperature profile of the combustion chambers will assist the operator in determining the proper charging rates.

After the last charge of the day is completed, the incinerator is set to initiate the burndown cycle. The limiting factor on how long the charging period can be sustained without initiating the burndown cycle is the degree of ash buildup on the hearth. Typically, the charging period is limited to 12 to 14 hours.[6]

7.4.2.2 Shutdown. The burndown cycle is essentially the same as that described for batch incinerators and is initiated after the last charge of the day is made. For intermittent-duty incinerators, the burndown sequence can be initiated manually or automatically.

7.4.3 Continuous-Duty, Starved-Air Incinerators

Continuous-duty incinerators have the capability of continuously removing the ash from the incinerator hearth. Consequently, the incinerator can be operated at a near-steady-state condition by continuously charging the unit at regularly timed intervals and, similarly, by removing the ash at regularly timed intervals.

7.4.3.1 Startup. Startup procedures for continuous-duty incinerators are essentially the same as those for the intermittent-duty

incinerators. The chambers are first preheated before the initial charge is loaded to the incinerator.

7.4.3.2 Shutdown. Shutdown of the incinerator involves stopping the charging process and maintaining temperatures in the combustion chamber until the remaining waste burns down to asn and is finally discharged from the system in the normal manner.

7.4.4 Excess-Air Incinerators

Incinerators operating at excess-air levels in the primary chamber likely will be used only for Type 4 (anatomical) wastes.[3] Type 4 wastes have a fairly consistent composition, contain high moisture levels, and have a low Btu value. Wide variations in Btu content are not expected, and the combustion rate can be well controlled at excess-air levels. The incinerator is operated at high primary combustion chamber temperatures with constant use of auxiliary burners.[3]

Typical applications include batch or intermittent operation; continuous-duty operation with automatic ash removal is atypical. Startup and shutdown of excess-air/pathological waste incinerators are briefly discussed in this section.

7.4.4.1 Startup. Startup of the excess-air incinerator is similar to startup for the batch-mode, starved-air incinerators. The secondary chamber is first preheated to a predetermined chamber temperature. The incinerator is then charged with the waste.

The waste is charged to the ignition chamber prior to burner ignition or preheat of the ignition chamber. The waste is placed on the hearth in a manner to provide maximum exposure to the primary chamber burner flame. Consequently, placing several components of the charge one on top of the other is not good practice. The charging door is closed, and the primary burner ignited.

Additional charges, if any, are made only after the previous charge has been significantly reduced in volume. The primary burner is shut off before the charge door is opened. If necessary, the ash bed is stoked before the new charge is added. After the new charge is added, the door is closed and sealed and the primary burner reignited.

7.4.4.2 Shutdown. There is no burndown period in the operation of excess-air/pathological incinerators. The degree of burnout achieved is

dictated by the length of time that the primary burner is left in operation. After complete destruction of the waste has been achieved (as noted by visual observation through a viewport), the primary burner is shutdown. The secondary burner is not shut off until all smoldering from residual material on the hearth in the primary chamber has ceased.[3] After all smoldering in the ignition chamber has ceased, the secondary burner is shutdown, and the incinerator allowed to cool. Once the incinerator is cool, the ash residue is manually removed by shoveling and/or raking.

7.4.5 Wet Scrubbers

Proper operation of a scrubber requires that the operator (1) establish a fixed liquid flow rate to the scrubbing section, (2) initiate gas flow through the system by starting a fan, and (3) set up the liquid recirculation system so that suspended and dissolved solids buildup does not create operating problems. Once the system has been started and operation has stabilized, little additional operator attention will be needed, other than for routine operation and maintenance activities. Operators should refer to the instruction manual provided by the scrubber manufacturer for adjustment of site-specific operating conditions.

7.4.5.1 Startup. The following sequence must be adhered to during startup of a scrubbing system to ensure proper operation:

1. Turn on the liquid recirculation system or liquid supply(s) to the scrubber(s) and mist eliminator.

2. Adjust the liquid flow rates to those specified in the instructions supplied by the scrubber manufacturer.

3. If the induced draft or forced draft fan feeding the scrubbing system has a damper installed at its inlet or outlet, close the damper.

4. Start the induced draft or forced draft fan feeding the scrubbing system.

5. If the system is equipped with a damper, gradually open the damper until the proper gas flow rate is established.

6. Again, recheck the liquid flow rate(s) and adjust as necessary.

7. Check the differential pressure across the scrubber and compare with the design pressure drop specified in the manual. If the pressure drop is too high, either the liquid flow rate or the gas flow rate is too

high. If the system is equipped with a damper, close the damper off slightly until the differential pressure reaches the proper level, or if it is not possible to decrease gas flow rates, decrease the liquid flow rate to the scrubber until the proper differential pressure is established. If the differential pressure is too low across the scrubber, either the liquid rate is too low or the gas flow rate is too low. To correct this condition, either increase the gas flow rate by opening a damper, or increase the liquid flow rate to the scrubber.

8. Initiate the liquid bleed to treatment or disposal, as specified in the manufacturer's manual. If the bleed is taken by an overflow from the recirculation tank, the flow rate at this point is established by the rate at which makeup water is introduced to the recirculation tank. The manufacturer's manual should show the anticipated water evaporation rate in the scrubbing system. If, as an example, the evaporation rate is 1 gallon per minute, and if you wish to establish a bleed rate of 1 gallon per minute, it will be necessary to feed 2 gallons per minute of total water to the recirculation tank. The bleed rate is determined by the rate at which the solids build up in the scrubbing system. These solids can be either suspended or dissolved solids or both. A scrubber is capable of handling a maximum of 3 percent (weight) suspended solids, and it is suggested that the dissolved solids not exceed 10 percent (weight). Based on design data, a recommended bleed rate from the system should be provided by the manufacturer. The operator should combine this figure with the evaporation figures to give a total recommended makeup water rate to the recirculation tank if an overflow type bleed system is used. If a bleed system is provided from a slip stream off the pump feeding the venturi scrubber, liquid makeup is normally provided by a level control device in the recirculation tank. The flow rate required will be the same as the flow rate required for the overflow bleed system. However, it is only necessary to ensure that adequate water supply is available to the level control device on a continuous basis.

7.4.5.2 Shutdown. To shut the system down without overloading the fan or causing any damage to the scrubbing equipment, the following procedures should be adhered to:

1. Shut off the induced draft or forced draft fan feeding the scrubbing system.

2. Wait until the fan impeller has stopped rotation and shutoff the scrubbing water recirculation pump.

3. Shut off the makeup water supply system.

7.4.6 Dry Scrubbers

Dry scrubbers either inject an alkaline slurry, which is subsequently dried by the hot flue gas, or a dry alkaline powder into the flue gas stream for acid gas control. Problems associated with startup and shutdown of dry scrubbers are directly related to excess moisture in the system. Excessive moisture refers to condensed water vapor and is a function of the moisture content, temperature, and resulting saturation of the flue gas in the system. Condensed water creates problems with solids buildup due to the hygroscopic nature of the alkaline sorbent materials and corrosion due to the corrosive nature of the salts, such as calcium chloride, resulting from the acid/alkaline neutralization reactions. Proper startup and shutdown procedures are intended to prohibit the condensation of water vapor in the presence of the alkaline sorbent or the reaction product salts.

7.4.6.1 Startup. Prevention of condensation during startup can be achieved by bringing the temperatures of the incinerator and flue gas up to normal operating levels before injection of the slurry or dry sorbent. Ideally, auxiliary fuel firing should be utilized to achieve these temperatures before charging with wastes to prevent uncontrolled emissions of acid gases. If the incinerator is started up with waste feed material, slurry feed should be regulated to provide a minimum wet bulb/dry bulb temperature difference of 90° to 100°F. This temperature differential will prevent condensation and will allow efficient removal of the acid gas.

7.4.6.2 Shutdown. At shutdown the system will eventually cool down to ambient temperature. If the temperature cools below the saturation temperature, condensation will occur. The approach to preventing solids buildup and salt corrosion at shutdown should be to eliminate, as much as possible, the alkaline sorbent materials and reaction products from the system before saturation temperatures are reached. Sorbent injection should be terminated and the exhaust system allowed to purge itself of all

sorbent and reaction products before the temperature cools to the saturation point. To achieve this goal, auxiliary fuel-firing should be utilized to maintain a minimum wet bulb/dry bulb temperature difference of 90° to 100°F until all waste are combusted. The auxiliary fuel firing should be continued long enough to maintain flue gas temperatures above saturation until the system is purged of sorbent and reaction products. Purging of the system should include a complete cleaning cycle for the fabric filter before the system is allowed to cool. If the alkaline filter cake is retained on the bags, condensation can result in blinding of the bags.

7.4.7 Fabric Filters

While the performance of a fabric filter is dependent on proper design, recordkeeping practices, and the timely detection of upset conditions, proper operation and preventive maintenance procedures are necessary to ensure satisfactory, long-term performance. This section discusses general operating procedures that can minimize unexpected malfunctions and improve the performance of the fabric filter. Preventive maintenance practices are discussed in Chapter 4. Proper operating procedures are important during startup, normal operation, shutdown, and emergency conditions.

7.4.7.1 Startup. Prior to operation of a new fabric filter, all components including the cleaning system, the dust-discharge system, and the isolation dampers and fans should undergo a complete check for proper operation. Clean ambient air should be passed through the system to confirm that all bags are properly installed. New bags are prone to abrasion if subjected to high dust loadings and full-load gas flows, particularly during the initial startup before the bags have the benefit of a dust buildup cake to protect the fibers from abrasion or to increase their resistance to gas flow. Full gas flow at high dust loadings can allow the particulate matter to impinge on the fabric at high velocity and result in abrasion that may shorten bag life. In addition, the dust may penetrate so deeply into the fabric that the cleaning system cannot remove it, and a "permanent" pressure drop results. Bag abrasion may be prevented by either (1) operating the incinerator at a low throughput and reduced gas volume to allow the dust cake to build gradually or (2) precoating the

bags to provide a protective cake before the incinerator exhaust is introduced. Precoat materials may include either flyash or pulverized limestone.

If the fabric filter is operated at temperatures below the dewpoint of water and/or the hydrochloric acid formed by the combustion of chlorinated plastics, serious operating problems may arise. Warm, moist gas that is introduced into a cool or cold fabric filter will cause condensation on the bags or on the fabric filter shell. Condensation can cause a condition known as "mudded" bags where the bags are blinded by dust and moisture. The acid dewpoint depends on the amount of moisture and acidic material in the gas stream. Condensation of acid can cause corrosion of the fabric filter components, sticky particulate and cake-release problems, and acid attack on some fabrics. Preheating the fabric filter to a temperature above the acid dewpoint will prevent condensation and enhance fabric filter performance. Because the incinerator goes through a warmup period using natural gas or fuel oil burners prior to waste combustion, the problems associated with condensation of water or hydrochloric acid are unlikely to occur. If sufficient heat in the fabric filter collector is not obtained from the incinerator auxiliary burner during startup, then additional auxiliary burners for preheating the baghouse should be added.

Unstable combustion during startup can cause some carbon carryover, which may result in a sticky particulate. This situation creates the potential for fires in the fabric filter when a combustion source and an adequate oxygen supply are available. Therefore, during startup, the fabric filter hoppers that collect the particulate should be emptied continually. More importantly, unstable combustion conditions during startup should be minimized by going through proper incinerator startup procedures.

7.4.7.2 Shutdown. The top priority during shutdown of a fabric filter is avoiding dewpoint conditions. Bag cleaning and hopper emptying are lower priority items.

When processes operate on a daily cycle, the last operation of the day should be to purge moisture and acidic materials from the fabric filter without passing through the dewpoint. In the case of a hospital waste incinerator, the operator should leave the secondary chamber burner

on for a few minutes after combustion is completed to remove moisture from the fabric filter. Ambient air could then be drawn through the system to purge the remaining combustion products.

After shutdown, 5 to 20 minutes of cleaning should be allowed in pulse-jet systems. This procedure will help prevent blinding of the bags. Additionally, continuing to operate the hopper discharge system while the cleaning system is in operation will minimize the potential of hopper plugging.

It is important to note that bypassing the fabric filter during startup, soot blowing, or an emergency may not be acceptable to the applicable regulatory agency. Such occurrences should be investigated and addressed during the design stages of development.

7.5 WASTE HEAT BOILER

Many hospital incinerator systems utilize a waste heat boiler for producing steam. When a waste heat boiler is included in the incineration system, the air inspector should be cognizant of the following additional items related to incinerator operation:

1. Boiler soot blowing cycle and
2. Use of the bypass stack.

The inspector should find out what soot blowing cycle is used by the facility and should understand any special provisions in the air regulations related to soot blowing; e.g., does the opacity regulation allow one 6-minute period of increased opacity per hour to accommodate excursions such as soot blowing? If possible, the inspector should observe the opacity of emissions during a soot blowing cycle.

Typically, an incinerator/boiler system will include a bypass stack (or duct) to allow the incinerator emissions to bypass the boiler when the boiler is off-line or during an emergency situation (such as loss of power to the induced draft fan). On incineration systems that include a waste heat boiler but do not include an add-on air pollution control device, the emissions to the atmosphere are not significantly affected when the bypass system is used. However, when both an add-on air pollution control device and a boiler are part of the incineration system, the combustion gases typically bypass both the boiler and the air pollution control device when the bypass stack is used; bypassing the air pollution control device will

affect the emissions to the atmosphere. Consequently, the air inspector should be aware of any special permit conditions (or general provisions of the regulations) relative to use of the bypass stack (i.e., bypassing the air pollution control). The inspector should obtain information about the facility's operating procedures, frequency of use, and recordkeeping procedures relative to use of the bypass stack.

7.6 CITIZENS COMPLAINT FOLLOWUP

Air pollution agencies, including EPA, receive many citizens complaints. Complaints should be welcomed by the Agency since they serve to increase overall surveillance and provide early warnings of developing problems. Appendix F provides a form which can be used to document citizen complaints.

7.7 REFERENCES FOR CHAPTER 7

1. Hospital Waste Combustion Study: Data Gathering Phase. Final Draft Report. U. S. Environmental Protection Agency, Office of Air Quality Planning and Standards, Research Triangle Park, North Carolina. EPA 450/3-88-017. December 1988. p. 5-2.

2. Ibid.

3. Ibid.

4. U. S. Environmental Protection Agency. EPA Guide for Infectious Waste Management. Office of Solid Waste. Washington, D.C. EPA 530-SW-86-014. May 1986.

5. Ecolaire Combustion Products, Inc. Equipment Operating Manual for Model No. 480E.

6. Doucet, L. C. Controlled-Air Incineration: Design, Procurement, and Operational Considerations. American Hospital Association Technical Series, Document No. 055872. January 1986.

7. Simonds Incinerators. Operation and Maintenance Manual for Models 751B, 1121B, and 2151B. January 1985.

8. Consumat Systems, Inc. Technical Data Sheet.

9. Ontario Ministry of the Environment. Incinerator Design and Operating Criteria, Volume II-Biomedical Waste Incinerators. October 1986.

10. Air Pollution Control District of Los Angeles County. Air Pollution Engineering Manual, AP-40. U. S. Environmental Protection Agency. May 1973.

8.0 GLOSSARY

ABSORPTION.[3] The process by which gas molecules are transferred to a liquid phase.

ACID GASES.[1] Corrosive gases formed during combustion of chlorinated or halogenated compounds, e.g., hydrogen chloride (HCl).

ACTUAL CUBIC FEET PER MINUTE (acfm).[3] A gas flow rate expressed with respect to temperature and pressure conditions.

ADIABATIC SATURATION.[1] A process in which an air or gas stream is saturated with water vapor without adding or subtracting heat from the system.

AIR, DRY.[1] Air containing no water vapor.

ASH.[1] The solid debris that is the byproduct of the combustion of solid materials.

ATOMIZATION.[1] The reduction of liquid to a fine spray.

BAROMETRIC SEAL.[1] A column of liquid used to hydraulically seal a scrubber, or any component thereof, from the atmosphere or any other part of the system.

BURN RATE.[1] The total quantity of waste that is burned per unit of time that is usually expressed in pounds of waste per hour.

CHARGE RATE.[1] Quantity of waste material loaded into an incinerator over a unit of time but which is not necessarily burned. Usually expressed in pounds of waste per hour.

COCURRENT OR CONCURRENT.[1] Flow of scrubbing liquid in the same direction as the gas stream.

COLLECTION EFFICIENCY.[1] The ratio of the weight of pollutant collected to the total weight of pollutant entering the collector.

COMBUSTION.[1] A thermal process in which organic compounds are broken down into carbon dioxide (CO_2) and water (H_2O).

CONDENSATION.[1] The physical process of converting a substance from the gaseous phase to the liquid phase via the removal of heat and/or the application of pressure.

CROSSFLOW.[1] Flow of scrubbing liquid normal (perpendicular) to the gas stream.

CYCLONE.[4] A device in which the velocity of an inlet gas stream is transformed into a confined vortex from which inertial forces tend to drive particles to the wall.

DAMPER.[2] An adjustable plate installed in a duct to regulate gas flow.

DEHUMIDIFY.[4] To remove water vapor from a gas stream.

DEMISTER.[4] A mechanical device used to remove entrained water droplets from a scrubbed gas stream.

DENSITY.[2] The ratio of the mass of an object to the volume of the object.

DIFFUSION (AEROSOL).[4] Random motion of particles caused by repeated collisions of gas molecules.

DRAFT.[2] A gas flow resulting from pressure difference; for example, between an incinerator and the atmosphere, which moves the products of combustion from the incinerator to the atmosphere. (1) Natural draft: the negative pressure created by the difference in density between the hot flue gases and the atmosphere. (2) Induced draft: the negative pressure created by the vacuum action of a fan or blower, between the incinerator and the stack. (3) Forced draft: the positive pressure created by the fan or blower, which supplies the primary or secondary air.

DRAG FORCE.[4] Resistance of motion of an object through a medium.

DUST.[2] Solid particles less than 100 micrometers created by the breakdown of larger particles.

DUST LOADING.[2] The weight of solid particulate suspended in an airstream (gas). Usually expressed in terms of grains per cubic foot, grams per cubic meter, or pounds per thousand pounds of gas.

ENDOTHERMIC.[4] A chemical reaction that absorbs heat from its surroundings. For example: $C+H_2O+heat \rightarrow CO+H_2$

ENTRAINMENT.[3] The suspension of solids, liquid droplets, or mist in a gas stream.

EXCESS AIR INCINERATION.[4] Controlled burning at greater than stoichiometric air requirements.

EXOTHERMIC.[4] A chemical reaction that liberates heat to its surroundings. Combustion is an exothermic reaction. For example: $C+O_2 \rightarrow CO_2+heat$

FEEDBACK CONTROL.[3] An automatic control system in which information about the controlled parameter is fed back and used for control of another parameter.

FIXED CARBON.[4] The nonvolatile organic portion of waste.

GRID.[1] A stationary support or retainer for a bed of packing in a packed bed scrubber.

HEADER.[1] A pipe used to supply and distribute liquid to downstream outlets.

HEAT RELEASE RATE.[4] The energy released over a unit of time during combustion. Calculated as the heating value (Btu/pound)xburn rate (pound/hour). Usually expressed as Btu/hour (Btu/h).

HEATING VALUE.[4] The amount of heat that is released when a material is combusted usually expressed as Btu/lb.

HUMIDITY, ABSOLUTE.[2] The weight of water vapor carried by a unit weight of dry air or gas.

HUMIDITY, RELATIVE.[2] The ratio of the absolute humidity in a gas to the absolute humidity of a saturated gas at the same temperature.

HYDROPHILIC MATERIAL.[4] Particulate matter that adsorbs moisture.

INCINERATOR.[4] A thermal device which combusts organic compounds using heat and oxygen.

INDUCED DRAFT FAN.[3] A fan used to move a gas stream by creating a negative pressure.

INERTIA.[4] Tendency of a particle to remain in a fixed direction, proportional to mass and velocity.

INTERCEPTION.[4] A type of aerosol collection related to impaction, in which an aerosol impacts the side of an obstacle because of reduced mobility across streamlines.

LIQUID-TO-GAS RATIO.[3] The ratio of the liquid (in gallons per minute) to the inlet gas flow rate (in acfm).

LIQUOR.[1] A solution of dissolved substance in a liquid (as opposed to a slurry, in which the materials are insoluble).

MAKEUP WATER.[3] Water added to compensate for water losses resulting from evaporation and water disposal.

MIST ELIMINATOR.[3] Equipment that removes entrained water droplets downstream from a scrubber.

MOISTURE.* Water contained in the waste which must be evaporated by the heat generated during combustion.

OPACITY.* Measure of the fraction of light attenuated by suspended particulate.

PACKED-BED SCRUBBER.[3] Equipment using small plastic or ceramic pieces, with high surface area to volume ratios for intimate gas/liquid contact for mass transfer.

PARTICLE.* Small discrete mass of solid or liquid matter.

PARTICLE SIZE.* An expression for the size of liquid or solid particle usually expressed in microns.

PARTICULATE EMISSION.* Fine solid matter suspended in combustion gases carried to the atmosphere. The emission rate is usually expressed as a concentration such as grains per dry standard cubic feet (gr/dscf) corrected to a common base, usually 12 percent CO_2.

PARTICULATE MATTER.* As related to control technology, any material except uncombined water that exists as a solid or liquid in the atmosphere or in a gas stream as measured by a standard (reference) method at specified conditions. The standard method of measurement and the specified conditions should be implied in or included with the particulate matter definition.

PATHOGENIC. Waste material capable of causing disease.

PATHOLOGICAL. Waste material relating to the study of the essential nature of disease and generally altered or caused by disease.

PENETRATION.* Fraction of suspended particulate that passes through a collection device.

pH.* A measure of acidity-alkalinity of a solution; determined by calculating the negative logarithm of the hydrogen ion concentration.

PRESSURE DROP.[3] The difference in static pressure between two points due to energy losses in a gas stream.

PRESSURE, STATIC.* The pressure exerted in all directions by a fluid; measured in a direction normal (perpendicular) to the direction of flow.

PRESSURE, TOTAL.* The algebraic sum of the velocity pressure and the static pressure.

PRESSURE, VELOCITY.* The kinetic pressure in the direction of gas flow.

PROXIMATE ANALYSIS.[4] The determination of the amounts of volatile matter, fixed carbon, moisture, and noncombustible (ash) matter in any given waste material.

PYROLYSIS. The chemical destruction of organic materials in the presence of heat and the absence of oxygen.

QUENCH.[1] Cooling of hot gases by rapid evaporation of water.

REAGENT.[2] The material used to react with the gaseous pollutants.

RETENTION TIME.[1] Amount of time the combustion gases are exposed to mixing, temperature, and excess air for final combustion.

SATURATED GAS.[1] A mixture of gas and vapor to which no additional vapor can be added, at specified conditions. Partial pressure of vapor is equal to vapor pressure of the liquid at the gas-vapor mixture temperature.

SIZE DISTRIBUTION.[1] Distribution of particles of different sizes within a matrix of aerosols; numbers of particles of specified sizes or size ranges, usually in micrometers.

SLURRY.[1] A mixture of liquid and finely divided insoluble solid materials.

SMOKE.[1] Small gasborne particles resulting from incomplete combustion; particles consist predominantly of carbon and other combustible material; present in sufficient quantity to be observable independently of other solids.

SPECIFIC GRAVITY.[1] The ratio between the density of a substance at a given temperature and the density of water at 4°C.

SPRAY NOZZLE.[1] A device used for the controlled introduction of scrubbing liquid at predetermined rates, distribution patterns, pressures, and droplet sizes.

STANDARD CUBIC FEET PER MINUTE (scfm).[3] A gas flow rate expressed with respect to standard temperature and pressure conditions.

STARVED AIR INCINERATION. Controlled burning at less than stoichiometric air requirements.

STOICHIOMETRIC. The theoretical amount of air required for complete combustion of waste to CO_2 and H_2O vapor.

STREAMLINE.[1] The visualized path of a fluid in motion.

STUFF AND BURN. A situation in which the charging rate is greater than burning rate to the incinerator.

TEMPERATURE, ABSOLUTE. Temperature expressed in degrees above absolute zero.

VAPOR. The gaseous form of substances that are normally in the solid or liquid state and whose states can be changed either by increasing the pressure or by decreasing the temperature.

VOLATILE MATTER. That portion of waste material which can be liberated with the application of heat only.

REFERENCES FOR CHAPTER 3

1. Industrial Gas Cleaning Institute. Wet Scrubber Technology. Publication WS-1, July 1985.

2. Industrial Gas Cleaning Institute. Fundamentals of Fabric Collectors and Glossary of Terms. Publication F-2, August 1972.

3. Flue Gas Desulfurization Inspection and Performance Evaluation. EAP/625/1-85-019. October 1985.

4. U. S. Environmental Protection Agency, Control Techniques for Particulate Emissions from Stationary Sources. Volume I. EPA-450/3-81-005a. September 1982.

APPENDIX A.

INSPECTION CHECKLIST FOR WASTE CHARACTERIZATION

INSPECTION CHECKLIST FOR WASTE CHARACTERIZATION

Date: _____

Inspectors name: _____

Agency affiliation: _____

Facility name: _____

Address: _____

Facility contact person: _____ Telephone No. _____

Refuse volume, lb/d: _____

Description of waste	Approximate percent
General trash	_____
Garbage	_____
Pathological	_____
Red bag infectious	_____

Heavy metals in waste, yes/no: _____

Total plastics content, percent: _____

Halogenated plastics content, percent: _____

Estimated moisture content, percent: _____

Estimating heating value, Btu/lb: _____

Waste handling practices

1. Are infectious waste properly bagged and marked, yes/no: _____
2. Are sharps contained in puncture resistant containers, yes/no: _____
3. Are torn or ruptured "red bags" obvious, yes/no: _____
4. Are liquids leaking from the bags, yes/no: _____
5. Are all reasonable steps being taken to assure integrity of red bags prior to charging to the incinerator? _____

Storage practices

1. Storage duration, days: _____
2. Storage area temperature, °F: _____

Comments: _____

_____

_____

_____

APPENDIX B.

INSPECTION CHECKLIST FOR INCINERATORS

APPENDIX B. INSPECTION CHECKLIST FOR INCINERATORS

Date: _____

Inspectors name: _____

Agency affiliation: _____

Facility name: _____

Address: _____

Facility contact person: _____ Telephone No. _____

Incinerator type/operating mode:

- Starved air _____
- Excess air _____
- Batch fed _____
- Intermittent duty _____
- Continuous duty _____

Charging rate, lb/h: _____

No. of charges/h: _____

Is primary air system in good working order, yes/no: _____

Is secondary air system, in good working order, yes/no: _____

Static pressure in primary chamber, in. w.c.: _____

Primary combustion chamber temperature, °F: _____

Secondary combustion chamber temperature, °F: _____

Exit gas oxygen level, %: _____

Exit gas CO level, %: _____

Opacity CEMS inspected, yes/no, comments: _____

Visible emissions from stack, %: _____

Fugitive visible emissions from ash removal: _____
(Attach Method 9 data form)

Other fugitive emissions observed: _____

Incinerator shell corrosion and/or hot spots, yes/no: _____

Audible air leaks, yes/no: _____

Ash quality: _____

Visual inspection of waste bed: _____

Visual inspection of secondary burner: _____

Startup procedures:

1. Frequency: _____
2. Temperature in secondary chamber before charging, °F: _____

Shutdown procedures:

1. Temperature in primary chamber at cutoff of secondary burners, °F: _____

Comments: _____

_____

_____

_____

_____

APPENDIX C.

INSPECTION CHECKLIST FOR POLLUTION CONTROL SYSTEM

INSPECTION CHECKLIST FOR VENTURI/PACKED-BED SCRUBBERS

Date: _____

Inspectors name: _____

Agency affiliation: _____

Facility name: _____

Address: _____

Facility contact person: _____ Telephone No. _____

Stack emissions opacity, yes/no (see Method 9 form): _____

Process fugitives emission, opacity average: _____

Plume color: _____

Water vapor plume present (yes/no): _____

Fan vibration problem (yes/no): _____

Fan current, amperes: _____

Scrubber pressure drop, in. w.c.: _____

Mist eliminator pressure drop, in. w.c.: _____

Scrubber liquid flow rate, gpm: _____

Scrubber liquid pressure, psig: _____

Scrubber liquid pump current: _____

Audible pump cavitation (yes/no): _____

Nozzle pressure, psig: _____

Physical problems of scrubber (yes/no): _____

Physical problems of ducting (yes/no): _____

Scrubber liquid effluent, pH level: _____

Recirculation tank pH level: _____

Recirculation tank percent suspended solids: _____

Mist eliminator feed water percent suspended solids: _____

Gas temperature at scrubber inlet, °F: _____

Gas temperature at scrubber outlet, °F: _____

Comments: _____

_____

_____

_____

_____

INSPECTION CHECKLIST FOR DRY SCRUBBERS

Date: _____

Inspectors name: _____

Agency affiliation: _____

Facility name: _____

Address: _____

Facility contact person: _____ Telephone No. _____

Process fugitive emissions (yes/no): _____

Plume color: _____

Average opacity, percent: _____

Spray dryer

Approach-to-saturation temperature: _____

Inlet gas temperature, dry bulb °F: _____

Outlet gas temperature, dry bulb °F: _____

Outlet gas temperature, wet bulb °F: _____

Makeup reagent feed rate: _____

Recycle reagent feed rate: _____

Nozzle air pressure, psig: _____

Nozzle slurry pressure, psig: _____

Dry scrubber

Reagent feed rate: _____

Solids recycle rate: _____

Comments: _____

INSPECTION CHECKLIST FOR PULSE-JET FABRIC FILTERS

Date: _____

Inspectors name: _____

Agency affiliation: _____

Facility name: _____

Address: _____

Facility contact person: _____ Telephone No. _____

Stack emissions opacity, 6 min average: _____

Condensed water vapor plume, presence/absence: _____

Process fugitive emissions, average opacity: _____

Plume color: _____

Pressure drop, baghouse compartment 1, in. w.c.: _____

Pressure drop, baghouse compartment 2, in. w.c.: _____

Pressure drop, baghouse compartment 3, in. w.c.: _____

Pulse cleaning cycle, min: _____

Pulse cleaning pressure, psi: _____

Baghouse gas inlet temperature, °F: _____

Baghouse gas outlet temperature, °F: _____

Solids discharge rate, lb/h: _____

Clean side deposits (yes/no): _____

Comments: _____

_____

_____

_____

_____

APPENDIX D.

METHOD 9 WORK SHEET

VISIBLE EMISSION OBSERVATION — No.

MPANY NAME	OBSERVATION DATE / START TIME / END TIME
REET ADDRESS	
Y / STATE / ZIP	
ONE (KEY CONTACT) / SOURCE ID NUMBER	
OCESS EQUIPMENT / OPERATING MODE	
NTROL EQUIPMENT / OPERATING MODE	
CRIBE EMISSION POINT	
GHT ABOVE GROUND LEVEL / HEIGHT RELATIVE TO OBSERVER: Start, End	
TANCE FROM OBSERVER: Start, End / DIRECTION FROM OBSERVER: Start, End	
CRIBE EMISSIONS: Start, End	
SSION COLOR: Start, End / IF WATER DROPLET PLUME: Attached ☐ Detached ☐	
NT IN THE PLUME AT WHICH OPACITY WAS DETERMINED: Start, End	
CRIBE PLUME BACKGROUND: Start, End	
CKGROUND COLOR: Start, End / SKY CONDITIONS: Start, End	
D SPEED: Start, End / WIND DIRECTION: Start, End	
MENT TEMP: Start, End / WET BULB TEMP / RH. percent	

MIN \ SEC	0	15	30	45	COMMENTS
1					
2					
3					
4					
5					
6					
7					
8					
9					
10					
11					
12					
13					
14					
15					
16					
17					
18					
19					
20					
21					
22					
23					
24					
25					
26					
27					
28					
29					
30					

SOURCE LAYOUT SKETCH — Draw North Arrow

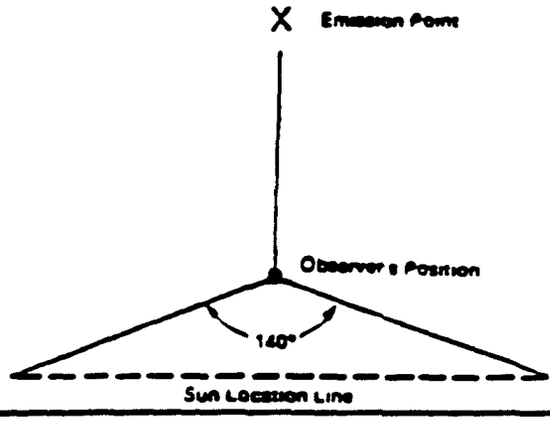

OBSERVER'S NAME (PRINT)

OBSERVER'S SIGNATURE / DATE

ORGANIZATION

CERTIFIED BY / DATE

TIONAL INFORMATION

CONTINUED ON VEO FORM NUMBER

APPENDIX E.

SAFETY CHECKLIST

APPENDIX E. SAFETY CHECKLIST

Waste handling

1. Is handling of red bags kept to a minimum? yes/no

2. Is the integrity of red bag waste maintained during handling? yes/no

Operator protective equipment

1. Does the operator wear proper protective equipment?

   a. Hard soled boats;
   b. Thick rubber gloves;
   c. Safety glasses;
   d. Disposable or special coveralls; and
   e. Dust mask/respirator

Operating hazards

Are available safety hazards evident?

1. Spilled liquids in the waste handling area
2. Scrubber solution leaks, spills

APPENDIX F. CITIZEN COMPLAINT FORM

COMPLAINT FORM

(Please print or type)

Statement of Mr. ☐ Mrs. ☐ Ms. ☐ _____
(Check One Only) First Name Last Name

Home Address _____
(Street Number) (City) Zip Code

Mailing Address _____ Tel. No. _____
(If Same As Home Enter "Same") (Home)

Business Address _____
(If None Enter "None") (City)

Business Telephone No. _____ Extension _____

1. NAME OF COMPANY OR SOURCE. _____
(If Not Known Leave Blank)

2. Nature of emission complained of (Check box) Smoke ☐
Dust ☐ Soot ☐ Odors ☐ Other ☐
Describe odor or emission _____
(Eg Paint Sauna Rotten Egg Etc.)

_____

3. Date and time emissions observed _____
(Specify Eg From To am/pm and Include Date)

4. If possible, designate specific source _____
(Eg Stack, Tank Etc.)

_____

5. Have you or any member of your household become ill because of these emissions?
Yes ☐ No ☐

6. Describe nature of illness _____

_____

7. State any damage done to your property, home, furniture, automobile, clothing, etc. _____

_____

_____

8. Will you testify in court? Yes ☐ No ☐ (If no complete declaration on reverse side)

I declare under penalty of perjury that the above information is true and correct.

Executed on _____ 19____ at _____

_____
(Signature)

APPENDIX G. EXAMPLE INSPECTION REPORT

APPENDIX G. EXAMPLE INSPECTION REPORT

Facility Name:	General Hospital
Address:	516 Memorial Lane Raleigh, North Carolina
I.D. No.:	28421
Facility Contact:	Mr. George Brown
Title:	Facility Engineer
Phone No.:	(404) 596-2431
Type of Inspection:	Routine annual Level II inspection
Date:	June 30, 1990
Time:	7:00 - 11:30 a.m. EDST
Inspector's Name:	John Doe
Agency:	U. S. Environmental Protection Agency Region IV
Source Inspected:	Incineration Facility

Background Information

General Hospital operates one Acme Model 200 controlled-air incinerator rated at 300 lb per charge of refuse. The unit is controlled by an Acme Model 300 venturi scrubber. The incinerator is subject to the State incinerator emission regulation, No. 4305, which limits particulate emissions to 0.08 gr/dscf at 12 percent CO_2 and visible emissions to 20 percent opacity. The State operating permit stipulates that secondary chamber combustion temperatures be maintained at a minimum of 1800°F with a retention time of 2 seconds. The permit also stipulates that the venturi scrubber be operated at a pressure drop of 20 in. w.c. with a liquid-to-gas ratio of 8 gallons per 1,000 actual cubic feet of exhaust gas. The incinerator is operated in a batch mode. On a typical day, operation of the incinerator starts around 7 a.m. with cleanout of ash from the previous day. The unit is then charged with a mixture of general hospital refuse and red bag waste and sealed. The incinerator secondary

chamber is then preheated for approximately 30 minutes with auxiliary fuel firing. The waste charge is burned for a set time period of 5 hours and allowed to cool down overnight for ash removal the following morning. During the initial phases of the waste combustion, the waste material provides the necessary heat, and the combustion is self-sustaining. During the later phases of burnout, auxiliary fuel burners are used to maintain the necessary temperatures.

General Inspection Information

On June 20, 1990, I phoned Mr. George Brown, Facility Engineer, and notified him that a representative of the North Carolina Air Pollution Control Division (APCD) and I would be conducting an annual inspection of the incineration facility on June 30, 1990. Because of the batch mode of operation of the incinerator, notification of the facility was necessary to obtain the operating schedule to ensure that the important phases of operation, including ash cleanout, charging, and burndown, could be observed.

On June 30, 1990, Mr. John Smith of the APCD and I arrived at the facility at 7 a.m. and met with Mr. Brown. Both Mr. Smith and I presented our credentials and explained the purpose of the inspection. Mr. Brown stated that the incinerator was used to burn both general refuse and red bag wastes. He estimated that red bag wastes comprised approximately 40 percent of the waste burned. Mr. Brown was unable to provide an estimate of the percentage of PVC plastics in the waste.

Facility Inspection

At approximately 7:45 a.m., Mr. Brown, Mr. Smith, and I moved to the incinerator location. The incinerator is located on a concrete pad approximately 75 feet from the loading dock. General refuse contained in white plastic garbage bags was stored in two plastic bins on the loading dock. A third plastic bin contained red bag wastes. The waste on the dock represented the waste generated by the hospital the previous day for incineration. The red bag wastes were approximately 30 to 40 percent by volume of the total wastes to be incinerated. The control panel for the incinerator contained maximum and minimum temperature thermostat settings for both the primary and secondary chambers of the incinerator. Temperature gauges for both chambers were also available on the control

panel. The exhaust duct from the incinerator passed through an adjustable throat venturi scrubber followed by a cyclonic mist eliminator. The venturi scrubber was equipped with a differential pressure meter and liquid flow meter. An induced-draft fan was located downstream of the mist eliminator. The fan was equipped with a static pressure gauge. The exhaust gases were emitted through a 25-foot-tall steel stack.

Inspection Findings

I visually inspected each of the red bags on the loading dock. All of the red bags were sealed with plastic ties. There were no tears or punctures in the bags. No sharps were protruding through the bags, and no liquids were leaking from the bags. Because of safety considerations, I did not open any of the red bags to characterize their contents. The bags were stored for one day on the dock at ambient temperatures (90°F max. on June 30, 1990). I did not observe any garbage or refuse either on the loading dock or on the concrete incinerator pad. I also did not detect any noticeable odors associated with the waste. Attachment 1 presents an inspection checklist for the waste characterization.

At 8:00 a.m., the incinerator operator opened the charging door to the incinerator and moved a large steel tray and several empty open drums to the door of the unit. He then scraped the bottom ash into the tray with a large hoe and shoveled the remaining ash into the drums. He immediately wetted down the ash with a nearby water hose. I observed a slight amount of visible fugitive dust emissions during removal of the ash prior to wetting. The tray and drums contained fine gray ash intermixed with a small amount of glass bottles and metal cans and utensils. I did not observe any non-combusted combustible material. The operator dumped the wet bottom ash in a nearby dumpster for subsequent disposal at the county landfill. While the doors were open, I looked inside the incinerator (I did not enter the unit). There were no obvious missing chunks in the refractory. Openings to the primary chamber air supply system did not appear to be plugged.

At approximately 8:30 a.m., the operator rolled the plastic bins containing the wastes to the incinerator. He manually tossed the red bag waste and the bags containing the general refuse onto the incinerator hearth and closed the charging door. At 8:55 a.m., the operator ignited

the secondary chamber auxiliary natural gas-fired burner to preheat the secondary chamber. I observed that the control settings for the secondary chamber were set for a minimum temperature of 1800°F and a maximum of 1975°F. While the secondary chamber was heating up, the operator started the draft fan and turned on the water flow to the venturi scrubber. At 9:18 a.m., the operator ignited the primary chamber burners. I noted that the temperature gauge for the secondary chamber indicated a value of 1825°F. I observed that the control settings for the primary chamber were at a minimum temperature of 1300°F and a maximum of 1500°F. At 9:43 a.m., I noted that the primary chamber auxiliary burner had shut off. The temperature readout indicated a primary chamber temperature of 1425°F. While the incinerator was operating, I slowly circled the entire unit. I did not observe any hot spots on the incinerator casing. Attachment 2 presents an inspection checklist for the incinerator.

After inspecting the incinerator, I visually inspected the ductwork of the exhaust system. I did not observe excessive corrosion or noticeable holes. I also did not locate any audible air leaks. I observed a pressure drop of 22 in.w.c. on the venturi scrubber pressure gauge and a liquid flow rate of 45 gallons per minute. The draft fan seemed to be operating properly. I did not observe any excessive vibrations. The magnehelic indicated a static pressure at the fan of 25 in. w.c. Attachment 3 presents an inspection checklist for the venturi scrubber.

At 10:30 a.m., I assumed a position 75 feet northeast of the stack and took visible emission readings for 15 minutes. The stack had an attached steam plume that dissipated approximately 40 feet from the stack. Average opacity for the period was 6.5 percent. Attachment 4 presents the visible emission observation form for the period.

Summary of Findings

1. Waste handling procedures complied with EPA recommended procedures. Infectious wastes were bagged in red plastic bags. I observed no tears, ruptures, punctures, or leaking liquids from the bags. Storage time for the wastes was a maximum of 24 hours. I observed no litter, vermin, or obnoxious odors.

2. The State operating permit requires a minimum secondary chamber temperature of 1800°F. During my observations, the secondary chamber temperature fluctuated between 1810° and 1875°F.

3. The State operating permit requires a minimum gas retention time in the secondary chamber of 2 seconds. During the State's initial compliance test (May 1988), the gas retention time was 2.2 seconds while burning a 243-lb charge of general refuse and red bag wastes. During the test, the average secondary combustion chamber temperature was 1845°F and the fan static pressure was 26 in. w.c. During this inspection, I estimated a charge weight of approximately 250 lb. The observed fan static pressure was 25 in. w.c. and the average secondary chamber temperature was 1830°F. Although I was unable to actually measure the flue gas volume, and as a result calculate the gas retention time, the observed secondary chamber temperature and fan static pressure indicate that the gas retention time in the secondary chamber should be similar to the measured rate during the initial performance test.

4. The State operating permit requires a minimum venturi scrubber pressure drop of 20 in. w.c. I observed a pressure drop of 20 in. w.c. as indicated by the scrubber magnehelic.

5. The State operating permit requires a minimum liquid-to-gas ratio of 8 gallons per thousand actual cubic feet of flue gas. During the State's initial compliance test, the liquid-to-gas ratio was 8.2 gal/1,000 acf with a liquid flow rate to the venturi scrubber of 48 gal/min. During this inspection, I observed a liquid flow rate of 50 gal/min. Although I was unable to actually measure the flue gas volume, and as a result the liquid-to-gas ratio, the observed liquid flow rate indicates that the liquid-to-gas ratio should be similiar to the measured rate during the initial performance test.

6. State regulations require that average opacity as measured by EPA Method 9 not exceed 20 percent. I observed an average opacity of 6.5 percent for 15 minutes during the inspection. Opacity did not exceed 20 percent for any 6-minute period.

7. I did not observe any documentable violations of applicable rules and regulations during this inspection.

INSPECTION CHECKLIST FOR INCINERATORS

Date: 6/30/90

Inspectors name: John Doe

Agency affiliation: EPA - Region IV

Facility name: General Hospital

Address: 516 Memorial Lane, Raleigh, N.C.

Facility contact person: George Brown Telephone No. (404) 596-2431

Incinerator type/operating mode:

Starved air	✓
Excess air	
Batch fed	✓
Intermittent duty	
Continuous duty	

Charging rate, lb/h: 300 lbs - once per day

No. of charges/h: 1 per day

Is primary air system in good working order, yes/no: yes

Is secondary air system, in good working order, yes/no: yes

Static pressure in primary chamber, in. w.c.: N/A

Primary combustion chamber temperature, °F: 1425°

Secondary combustion chamber temperature, °F: 1825°

Exit gas oxygen level, %: N/A

Exit gas CO level, %: N/A

Opacity CEMS inspected, yes/no, comments: N/A

Visible emissions from stack, %: 6.5

Fugitive visible emissions from ash removal: Very slight emissions for 2-3 s.
(Attach Method 9 data form)

Other fugitive emissions observed: None

Incinerator shell corrosion and/or hot spots, yes/no: No

Audible air leaks, yes/no: No

Ash quality: Fine gray ash - no obvious unburned combustibles

Visual inspection of waste bed: N/A

Visual inspection of secondary burner: N/A

Startup procedures:

1. Frequency: 1 per day
2. Temperature in secondary chamber before charging, °F: 1825°

Shutdown procedures:

1. Temperature in primary chamber at cutoff of secondary burners, °F: N/A

Comments: The incinerator appeared to be well maintained. There were no obvious missing chunks in the refractory or any noticable air leaks.

INSPECTION CHECKLIST FOR VENTURI/PACKED-BED SCRUBBERS

Date: 6/30/90

Inspectors name: John Doe

Agency affiliation: EPA - Region IV

Facility name: General Hospital

Address: 516 Memorial Lane, Raleigh, N.C.

Facility contact person: George Brown Telephone No. (404) 596-2431

Stack emissions opacity, yes/no (see Method 9 form): yes

Process fugitives emission, opacity average: none

Plume color: Gray

Water vapor plume present (yes/no): yes

Fan vibration problem (yes/no): No

Fan current, amperes: N/A - Static pressure 25 in. w.c.

Scrubber pressure drop, in. w.c.: 22

Mist eliminator pressure drop, in. w.c.: N/A

Scrubber liquid flow rate, gpm: 45

Scrubber liquid pressure, psig: N/A

Scrubber liquid pump current: N/A

Audible pump cavitation (yes/no): No

Nozzle pressure, psig: N/A

Physical problems of scrubber (yes/no): No

Physical problems of ducting (yes/no): No

Scrubber liquid effluent, pH level: N/A

Recirculation tank pH level: N/A

Recirculation tank percent suspended solids: N/A

Mist eliminator feed water percent suspended solids: N/A

Gas temperature at scrubber inlet, °F: N/A

Gas temperature at scrubber outlet, °F: N/A

Comments: The physical appearance of the scrubber did not indicate any corrosion problems. All monitored parameters were in an acceptable range of those measured during the May 1988 initial compliance test.

Attachment 1

ANY NAME: General Hospital

T ADDRESS: 16 Memorial Lane

aleigh | STATE: N.C. | ZIP: 27812

(KEY CONTACT): 4) 596-2431 | SOURCE ID NUMBER: 28421

SS EQUIPMENT: Incinerator | OPERATING MODE: Batch

OL EQUIPMENT: enturi Scrubber | OPERATING MODE:

IBE EMISSION POINT: 5 ft steel stack - 18 in. diameter

T ABOVE GROUND LEVEL: 25 ft. | HEIGHT RELATIVE TO OBSERVER: Start 25 ft End same

NCE FROM OBSERVER: 75 ft End same | DIRECTION FROM OBSERVER: Start SW End same

IBE EMISSIONS: Steady @ 5-10% End same

ON COLOR: Gray End Same | IF WATER DROPLET PLUME: Attached ☒ Detached ☐

IN THE PLUME AT WHICH OPACITY WAS DETERMINED: After steam disapation End Same

IBE PLUME BACKGROUND: Sky End Same

ROUND COLOR: Blue End Same | SKY CONDITIONS: Start Clear End Same

PEED: 0-5mph End same | WIND DIRECTION: Start NW End Same

NT TEMP: 90°F End Same | WET BULB TEMP: | RH, percent:

SOURCE LAYOUT SKETCH

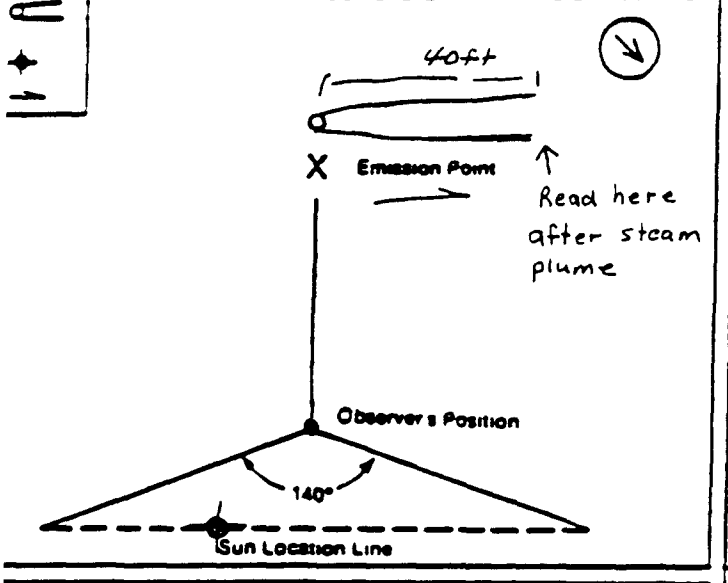

NAL INFORMATION

OBSERVATION DATE: 6/30/90 | START TIME: 10:30 a.m. | END TIME: 10:45

MIN \ SEC	0	15	30	45	COMMENTS
1	5	10	5	5	--
2	10	5	5	5	
3	5	5	5	0	
4	5	5	5	5	
5	5	5	5	5	
6	5	10	5	5	
7	5	10	10	5	
8	5	10	5	5	
9	5	5	5	5	
10	5	5	5	5	
11	5	5	10	10	
12	10	10	10	5	
13	5	10	10	10	
14	10	10	10	5	
15	5	5	10	10	
16					
17					
18					
19					
20					
21					
22					
23					
24					
25					
26					
27					
28					
29					
30					

OBSERVER'S NAME (PRINT): John Doe

OBSERVER'S SIGNATURE: John Doe | DATE: 6/30/90

ORGANIZATION: U.S. EPA - Region IV

CERTIFIED BY: U.S. EPA | DATE: 4/15/90

CONTINUED ON VEO FORM NUMBER

TECHNICAL REPORT DATA

(Please read Instructions on the reverse before completing)

1. REPORT NO. EPA-340/1-89-001	2.	3. RECIPIENT'S ACCESSION NO.
4. TITLE AND SUBTITLE Hospital Waste Incinerator Field Inspection and Source Evaluation Manual		5. REPORT DATE February 1989
		6. PERFORMING ORGANIZATION CODE
7. AUTHOR(S) Stacy Smith, Steven Schliesser, Mark Turner, Stephen Edgerton		8. PERFORMING ORGANIZATION REPORT
9. PERFORMING ORGANIZATION NAME AND ADDRESS Midwest Research Institute, Suite 350, 401 Harrison Oaks Boulevard, Cary, North Carolina 27513		10. PROGRAM ELEMENT NO.
		11. CONTRACT GRANT NO. 68-02-4463
12. SPONSORING AGENCY NAME AND ADDRESS U. S. Environmental Protection Agency, Stationary Source Compliance Division, Office of Air Quality Planning and Standards, Washington, D.C. 20460		13. TYPE OF REPORT AND PERIOD COVERED
		14. SPONSORING AGENCY CODE

15. SUPPLEMENTARY NOTES
EPA Work Assignment Manager
James Topsale, Region III, Philadelphia, Pennsylvania
Pam Saunders, SSCD, Washington, D.C.

16. ABSTRACT

This manual summarizes the information necessary for conducting field inspections of hospital waste incinerators. The manual is intended for use by Federal, State, and local field inspectors.

The document presents the following information: (a) basic inspection procedures, (b) descriptions of the types of hospital waste incinerators, (c) descriptions of air pollution control systems which might be used on hospital incinerators, and (d) inspection techniques for hospital incinerators. Inspection checklists also are provided.

17. KEY WORDS AND DOCUMENT ANALYSIS

a. DESCRIPTORS	b. IDENTIFIERS/OPEN ENDED TERMS	c. COSATI Field/Group
Hospital Waste Incineration Field Inspections		

18. DISTRIBUTION STATEMENT Release unlimited	19. SECURITY CLASS (This Report)	21. NO. OF PAGES
	20. SECURITY CLASS (This page)	22. PRICE

EPA Form 2220-1 (Rev. 4-77) PREVIOUS EDITION IS OBSOLETE