EPA-440/1-75/048
Group I, Phase II

Development Document for Advanced Notice of Proposed Rule Making for Effluent Limitations Guidelines and New Source Pertormance Standards for the

Hot Forming and Cold Finishing

Segment of the

Iron and Steel Manufacturing

Point Source Category

UNITED STATES ENVIRONMENTAL PROTECTION AGENCY

AUGUST 1975

DEVELOPMENT DOCUMENT

for

EFFLUENT LIMITATIONS GUIDELINES

and

NEW SOURCE PERFORMANCE STANDARDS

for the

HOT FORMING & COLD FINISHING SEGMENT

of the

IRON AND STEEL MANUFACTURING

POINT SOURCE CATEGORY

Russell E. Train
Administrator

James L. Agee
Assistant Administrator for Water
and Hazardous Materials

Allen Cywin
Director, Effluent Guidelines Division

Edward L. Dulaney
Project Officer

John G. Williams
Assistant Project Officer

August, 1975

Effluent Guidelines Division
Office of Water and Hazardous Materials
U. S. Environmental Protection Agency
Washington, D. C. 20460

DRAFT

ABSTRACT

This document presents the findings of an extensive study of the hot forming and cold finishing operations of the iron and steel industry for the purpose of developing effluent limitations guidelines, Federal standards of performance, and pretreatment standards for this segment of the industry to implement Sections 304, 306, and 307 of the "Act".

Effluent limitations guidelines contained herein set forth the effluent quality attainable through the application of the best practicable control technology currently available (BPCTCA) and the best available technology economically achievable (BATEA) which must be achieved by existing point sources by July 1, 1977, and July 1, 1983, respectively. The standards of performance for new sources (NSPS) contained herein set forth the effluent quality which is achievable through the application of the best available demonstrated control technology (BADCT), processes, operating methods, or other alternatives.

Supporting data and rationale for development of the effluent limitations guidelines and standards of performance are contained in this report.

CONTENTS

Section		Page
I	CONCLUSIONS	1
II	RECOMMENDATIONS	3
	BPCTCA Effluent Limitations	3
	BATEA Effluent Limitations	11
	NSPS Effluent Limitations	19
III	INTRODUCTION	27
	Purpose And Authority	27
	Methods Used To Develop Limitations	28
	General Description Of The Industry	29
	General Description Of The Operations	37
IV	INDUSTRY SUBCATEGORIZATION	45
	Description Of The Operations	45
	Hot Forming Primary	46
	Hot Forming Section	49
	Hot Forming Flat	53
	Pipe And Tube	60
	Pickling - Sulfuric Acid - Batch	68
	Pickling - Hydrochloric Acid	72
	Cold Rolling	77
	Hot Coatings - Galvanizing	84
	Hot Coatings - Terne	85
	Rationale For Categorization - Factors Considered	93
	Selection Of Candidate Plants For Visits	105
V	WATER USE AND WASTE CHARACTERIZATION	123
	Hot Forming Primary	124
	Hot Forming Section	125
	Hot Forming Flat	125
	Pipe And Tube	127
	Pickling - Sulfuric Acid - Batch	132
	Pickling - Hydrochloric Acid	132
	Cold Rolling	134
	Hot Coatings - Galvanizing	141
	Hot Coatings - Terne	142
	Miscellaneous Runoffs	142
	Maintenance Department Wastes	149
	Noncontact Cooling Water	150
	Classification Of Water Used In The Steel Industry	153
	Wastes From Water, Steam And Electric Power Generation	153

Wastes Generated From Water Treatment Operations 163

VI SELECTION OF POLLUTANT PARAMETERS 173
Broad List Of Pollutants 173
Rationale For Selection Of Control Parameters 173
Selection Of Critical Parameters By Operations 180
Environmental Impact Of Pollutants 181

VII CONTROL AND TREATMENT TECHNOLOGY 191
Range Of Technology And Current Practice 191
Hot Forming Primary 191
Hot Forming Section 205
Hot Forming Flat - Plate Mills 206
Hot Forming Flat - Hot Strip And Sheet Mills 214
Pipe And Tube Mills - Hot Worked 217
Butt Welded Pipe Mills 217
Electric Resistance Welded Pipe Mills 221
Seamless Tube Mills 221
Pipe And Tube Mills - Cold Worked 226
Pickling 226
Disposal Processes 226
Recycling Processes 233
Crystallization Processes 234
Spray Roaster Processes 238
Fluid-Bed Processes 239
Sulfuric Acid Processes 241
Hydrochloric Acid Processes 241
Cold Rolling Operations 273
Coating Operations 275
Specific Parameter Discussion 288
Reference Level Of Treatment 312

VIII COST, ENERGY, AND NON-WATER QUALITY ASPECTS 315
Introduction 315
Costs 315
Basis Of Cost Estimates 317
Reference Level And Intermediate Technology, Energy And Non-Water Impact By Subcategory 320
Advanced Technology, Energy, And Non-Water Impact By Subcategory 326

IX BPCTCA EFFLUENT LIMITATIONS GUIDELINES 369
Rationale For Selection Of BPCTCA 370
Size, Age, Land Availability Considerations 370
Consideration Of Processes Employed 370
Consideration Of Non-Water Quality Environmental Impact 371
Impact On Energy Requirements 371
Engineering Aspects Of The Application Of

	Control Techniques	372
	Consideration Of Process Changes	372
	Consideration Of Cost Versus Effluent Reduction Benefits	372
	Identification And Discussion Of BPCTCA Effluent Limitations Guidelines By Subcategory	373
	Treatment Models	378
X	BATEA EFFLUENT LIMITATIONS GUIDELINES	441
	Rationale For The Selection Of BATEA	442
	Size, Age, Land Availability Considerations	442
	Consideration Of Processes Employed	442
	Consideration Of Non-Water Quality Environmental Impact	443
	Impact On Energy Requirements	444
	Consideration Of Process Changes	444
	Consideration Of Cost Of Achieving BATEA Effluent Limitations Guidelines	444
	Identification And Discussion Of BATEA Effluent Limitations Guidelines By Subcategory	445
	Cost Versus Effluent Reduction Benefits	446
	Treatment Models	450
	Cost Effective Diagrams	451
XI	NEW SOURCE PERFORMANCE STANDARDS (NSPS)	525
	Introduction	525
	NSPS Discharge Standard By Subcategory	525
XII	ACKNOWLEDGEMENTS	527
XIII	REFERENCES	529
XIV	GLOSSARY	549

FIGURES

OMIT THE FOLLOWING FIGURES

Number	Title
15	Sulfonic Acid Tin Line Cold Coating Process Flow Diagram
16	Cold Coating Halogen Tin Line Process Flow Diagram
17	Cold Coating Alkaline Tin Line Process Flow Diagram
18	Cold Coating Chrome Plate Line Process Flow Diagram
19	Cold Coating Zinc Plate Line Process Flow Diagram

DRAFT

FIGURES

Number	Title	Page
1	Hot Forming-Cold Finishing Process Flow Diagram	38
2	Hot Forming Type I Process Flow Diagram	50
3	Hot Forming Type III Process Flow Diagram	54
3A	Wire-Making System Process Flow Diagram	55
4	Hot Forming Type II Process Flow Diagram	57
5	Butt Weld Pipe Mill Seamless Tube Mill Process Flow Diagram	61
5A	Tubing Mill Electric Resistance Welded Process Flow Diagram	62
6	Continuous Strip Pickling Hydrochloric Acid Process Flow Diagram	69
6A	Continuous Strip Pickling Sulfuric Acid Process Flow Diagram	70
7	Batch Pickling Sulfuric Acid Process Flow Diagram	71
8	Cold Rolling Mill Type I Process Flow Diagram	80
9	Flat Products General Process Flow Diagram	81
10	Hot Coating Galvanizing (ZN) Type I Process Flow Diagram	86
11	Hot Coating Galvanizing (ZN) Type II USS Steel Process Process Flow Diagram	87
12	Hot Coating Galvanizing (ZN) Type II Process Flow Diagram	88
13	Hot Coating Terne Plate Process Flow Diagram	90
14	Hot Coating Aluminizing Process Flow	92

DRAFT

NUMBER	TITLE	PAGE
	Diagram	
15	Sulfonic Acid Tin Line Cold Coating Process Flow Diagram	N/A
16	Cold Coating Halogen Tin Line Process Flow Diagram	N/A
17	Cold Coating Alkaline Tin Line Process Flow Diagram	N/A
18	Cold Coating Chrome Plate Line Process Flow Diagram	N/A
19	Cold Coating Zinc Plate Line Process Flow Diagram	N/A
20	Typical Sources Of Treatment Makeup Water To Steel Industry Subcategory Processes	151
21	Hot Forming Wastewater Treatment System Water Flow Diagram	200
22	Hot Forming Wastewater Treatment System Water Flow Diagram	202
23	Hot Forming Wastewater Treatment System Water Flow Diagram	203
24	Hot Forming Wastewater Treatment System Water Flow Diagram	204
25	Hot Forming Wastewater Treatment System Water Flow Diagram	209
26	Hot Forming Section Wastewater Treatment System Water Flow Diagram	210
27	Bar Mills Wastewater Treatment System Water Flow Diagram	211
28	Hot Forming Wastewater Treatment System Water Flow Diagram	212
29	Combined Wire, Rod, Pickling Wastewater Treatment System Water Flow Diagram	213
30	Hot Strip Mill Wastewater Treatment System Water Flow Diagram	218

FIGURES

DRAFT

NUMBER	TITLE	PAGE
31	Hot Rolling Mill Wastewater Treatment System Water Flow Diagram	215
32	Hot Forming Wastewater Treatment System Water Flow Diagram	205
33	Hot Forming Wastewater Treatment System Water Flow Diagram	219
34	Hot Forming Wastewater Treatment System Water Flow Diagram	220
35	Pipe and Tube Mill Wastewater Treatment System Water Flow Diagram	224
36	Pipe and Tube Mill Wastewater Treatment System Water Flow Diagram	225
37	Pipe and Tube Mill Wastewater Treatment System Water Flow Diagram	227
38	Pipe and Tube Mill Wastewater Treatment System Water Flow Diagram	228
39	Pipe and Tube Mill Wastewater Treatment System Water Flow Diagram	229
40	Sulfuric Acid Recovery Process Flow Diagram	236
41	Pickling and Acid Recovery Process Flow Diagram	237
42	HCl Regeneration Type I Process Flow Diagram	240
43	HCl Regeneration Type II Fluid Bed Roaster Process Flow Diagram	242
44	HCl Regeneration Type III Wet Chemical Process Process Flow Diagram	244
45	Sulfuric Acid Pickling and Acid Recovery Operation Wastewater Treatment System Water Flow Diagram	249
46	Sulfuric Acid Recovery Wastewater Treatment System Water Flow Diagram	250

DRAFT

NUMBER	TITLE	PAGE
47	Batch H_2SO_4 Pickling and Acid Recovery Wastewater Treatment System Water Flow Diagram	251
48	Sulfuric Acid Pickling and Recovery Batch Operation Wastewater Treatment System Water Flow Diagram	252
49	H_2SO_4 Pickling Line Wastewater Treatment System Water Flow Diagram	253
50	Batch H_2SO_4 Pickling Wastewater Treatment System Water Flow Diagram	254
51	Continuous Strip Pickling Wastewater Treatment System Water Flow Diagram	256
52	HCl Pickling Line Wastewater Treatment System Water Flow Diagram	262
53	HCl Pickling Line Wastewater Treatment System Water Flow Diagram	263
54	Hot Coating Line-Galvanizing Wastewater Treatment System Water Flow Diagram	264
55	Continuous HCl Pickling and Recovery Wastewater Treatment System Water Flow Diagram	265
56	Cold Forming and HCl Pickling Wastewater Treatment System Water Flow Diagram	266
57	HCl Regeneration Wastewater Treatment System Water Flow Diagram	267
58	HCl Pickle Line Wastewater Treatment System Water Flow Diagram	268
59	HCl Regeneration Wastewater Treatment System Water Flow Diagram	269
60	HCl Pickling Line Wastewater Treatment System Water Flow Diagram	270
61	HCl Pickling Line Wastewater Treatment System Water Flow Diagram	271
62	Cold Rolling and HCl Pickling Waste-	

DRAFT

NUMBER	TITLE	PAGE
	water Treatment System Water Flow Diagram	272
63	Cold Rolling Wastewater Treatment System Water Flow Diagram	277
64	Cold Rolling Wastewater Treatment System Water Flow Diagram	278
65	Cold Rolling Wastewater Treatment System Water Flow Diagram	279
66	Hot and Cold Coating Lines Wastewater Treatment System Water Flow Diagram	284
67	Hot Coating Line Wastewater Treatment System Water Flow Diagram	285
68	Hot Coating - Terne Plating Wastewater Treatment System Water Flow Diagram	286
69	Hot Coating - Terne Plating Wastewater Treatment System Water Flow Diagram	287
70	Cold Coating Lines - Tin and Chromium Wastewater Treatment System Water Flow Diagram	289
71	Cold Coating - Tin or Chromium Wastewater Treatment System Water Flow Diagram	290
72	Cold Coating Lines - Tin and Chromium Wastewater Treatment System Water Flow Diagram	291
73	Cold Coating Line - Tin Wastewater Treatment System Water Flow Diagram	292
74	Hot Forming/Primary Subcategory BPCTCA Model	378
75	Hot Forming/Section Subcategory BPCTCA Model	381
76	Hot Forming/Flat-Hot Strip and Sheet Subcategory BPCTCA Model	385

DRAFT

NUMBER	TITLE	PAGE
77	Hot Forming/Flat-Plate Subcategory BPCTCA Model	387
78	Pipe And Tube Subcategory BPCTCA Model	391
79	Pickling/H_2SO_4 Batch - Concentrated Subcategory BPCTCA Model	394
80	Pickling/H_2SO_4 Batch - Rinse Subcategory BPCTCA Model	398
81	Pickling/HCL - Concentrated - Alternate I Subcategory BPCTCA Model	401
82	Pickling/HCL Rinse Alternate I Subcategory BPCTCA Model	402
83	Pickling/HCL - Concentrates And Rinses Alternate II Subcategory BPCTCA Model	403
84	Cold Rolling - Recirculation Subcategory BPCTCA Model	414
85	Cold Rolling - Combination Subcategory BPCTCA Model	417
86	Cold Rolling - Direct Application Subcategory BPCTCA Model	420
87	Hot Coating/Galvanizing Subcategory BPCTCA Model	423
88	Hot Coatings - Terne Subcategory BPCTCA Model	427
89	Non-Contact Cooling Water Blowdown Subcategory BPCTCA Model	432
90-1	Utility Area Wastewater System Coke Making, Degassing And Pickling Concentrates Subcategory BPCTCA Model	434
90-2	Utility Area Wastewater System Hot And Cold Coatings Subcategories BPCTCA Model	435
90-3	Utility Area Wastewater System Steel-Making, Casting, Hot Forming, Cold Rolling And Pickling - All Rinse Sub-	

DRAFT

NUMBER	TITLE	PAGE
	categories BPCTCA Model	436
91	Maintenance Department Wastes Subcategory BPCTCA Model	438
92A	Hot Forming/Primary Subcategory BATEA Model	450
92B	Model Cost Effectiveness Diagram Hot Forming - Primary Subcategory	451
93A	Hot Forming/Section Subcategory BATEA Model	454
93B	Model Cost Effectiveness Diagram Hot Forming - Section Subcategory	455
94A	Hot Forming/Flat - Hot Strip And Sheet Subcategory BATEA Model	459
94B	Model Cost Effectiveness Diagram Hot Forming - Flat - Hot Strip And Sheet Subcategory	460
95A	Hot Forming/Flat - Plate Subcategory BATEA Model	462
95B	Model Cost Effectiveness Diagram Hot Forming - Flat Plate Subcategory	463
96A	Pipe And Tube Subcategory BATEA Model	467
96B	Model Cost Effectiveness Diagram Pipe And Tubes Subcategory	468
97A	Pickling/H_2SO_4 - Batch - Concentrated Subcategory BATEA Model	472
97B	Model Cost Effectiveness Diagram Pickling - Sulfuric Acid - Batch - Concentrated Subcategory	473
98A	Pickling/H_2SO_4 - Batch - Rinse Subcategory BATEA Model	475
98B	Model Cost Effectiveness Diagram Pickling - Sulfuric Acid - Batch - Rinse Subcategory	476
99A	Pickling/HCL - Concentrated - Alternate I	

DRAFT

NUMBER	TITLE	PAGE
	Subcategory BATEA Model	480
99B	Model Cost Effectiveness Diagram Pickling Hydrochloric Acid - Concentrated Subcategory - Alternate I	481
100A	Pickling/HCL - Rinse - Alternate I Subcategory BATEA Model	488
100B	Model Cost Effectiveness Diagram Pickling - Hydrochloric Acid - Rinse Subcategory - Alternate I	489
101A	Pickling/HCL Concentrates And Rinses Alternate II Subcategory BATEA Model	484
101B	Model Cost Effectiveness Diagram Pickling - Hydrochloric Acid - Concentrated And Rinse - Subcategory - Alternate II	485
102A	Cold Rolling - Recirculation Subcategory BATEA Model	492
102B	Model Cost Effectiveness Diagram Cold Rolling - Recirculation Subcategory	493
103A	Cold Rolling - Combination Subcategory BATEA Model	495
103B	Model Cost Effectiveness Diagram Cold Rolling - Combination Subcategory	496
104A	Cold Rolling - Direct Application Subcategory BATEA Model	498
104B	Model Cost Effectiveness Diagram Cold Rolling - Direct Application Subcategory	499
105A	Hot Coatings - Galvanizing Subcategory BATEA Model	502
105B	Model Cost Effectiveness Diagram Hot Coating - Galvanizing - Subcategory	503
106A	Hot Coatings - Terne Subcategory BATEA Model	507

DRAFT

NUMBER	TITLE	PAGE
106B	Model Cost Effectiveness Diagram Hot Coating - Terne Subcategory	508
107	Miscellaneous Runoffs Subcategory BATEA Model	510
108	Non-Contact Cooling Water Blowdown Subcategory BATEA Model	515
109-1	Utility Area Wastewater System Coke Making, Degassing And Pickling Concentrates Subcategory BATEA Model	517
109-2	Utility Area Wastewater System Hot And Cold Coatings Subcategories BATEA Model	518
109-3	Utility Area Wastewater System Steel-Making, Casting, Hot Forming Cold Rolling And Pickling - All Rinse Subcategories BATEA Model	519
110	Maintenance Department Wastes Subcategory BATEA Model	520

DRAFT

TABLES

OMIT THE FOLLOWING TABLES

NUMBER	TITLE
15	Plant Age and Size - Cold Coatings - Tin
16	Plant Age and Size - Cold Coatings - Chrome
36	Characteristics of Cold Coatings - Halogen - Tin Plant Wastes
37	Characteristics of Cold Coatings - Sulfonic - Tin Plant Wastes
38	Characteristics of Cold Coatings - Alkaline - Tin Plant Wastes
39	Characteristics of Cold Coatings - Chrome Plant Wastes
47	Cold Coatings - Chrome and Plating Operation Parameters
61	Water Effluent Treatment Costs - Cold Coatings - Tin
62	Water Effleunt Treatment Costs - Cold Coatings - Chrome

DRAFT

TABLES

NUMBER	TITLE	PAGE
1	United States Annual Steel Ingot Ton Production	31
2	Product Classification by SIC Code (3312)	32
3	Product Classification by SIC Code (3315)	34
4	Product Classification by SIC Code (3316)	35
5	Product Classification by SIC Code (3317)	36
6	Plant Age and Size - Hot Forming Primary	94
7	Plant Age and Size - Hot Forming Section	95
8	Plant Age and Size - Hot Forming Flat	96
9	Plant Age and Size - Pipe and Tubes	97
10	Plant Age and Size - Pickling - Sulfuric Acid - Batch	98
11	Plant Age and Size - Pickling - Hydrochloric Acid - Batch and Continuous	99
12	Plant Age and Size - Cold Rolling	100
13	Plant Age and Size - Hot Coatings - Galvanizing	101
14	Plant Age and Size - Hot Coatings - Terne	102
15	Plant Age and Size - Cold Coatings - Tin	103
16	Plant Age and Size - Cold Coatings - Chrome	104
17	Subcategorization of the Hot Forming and Cold Finishing Operations	106
18	Rationale for Plant Selections	107
19	Industrial Categorization and Survey Requirements for Hot Forming and Cold Finishing Operations	120
20	Characteristics of Hot Forming Primary Plant Wastes	126

DRAFT

TABLES (Cont'd)

NUMBER	TITLE	PAGE
21	Characteristics of Hot Forming Section Plant Wastes	126
22	Characteristics of Hot Forming Flat Plant Wastes	128
23	Characteristics of Pipe and Tubes - Hot Worked Plant Wastes	128
24	Characteristics of Pipe and Tubes - Cold Worked Plant Wastes	131
25	Characteristics of Pickling - Sulfuric Acid Batch Plant Wastes - Spent Pickle Liquor	131
26	Characteristics of Pickling - Sulfuric Acid Batch Plant Wastes - Rinses	135
27	Characteristics of Pickling - Hydrochloric Acid Batch Plant Wastes - Spent Pickle Liquor	136
28	Characteristics of Pickling - Hydrochloric Acid Batch Plant Wastes - Rinses	136
29	Characteristics of Pickling - Hydrochloric Acid Continuous Plant Wastes - Spent Pickle Liquor	137
30	Characteristics of Pickling - Hydrochloric Acid Continuous Plant Wastes - Regeneration Absorber Scrubber	137
31	Characteristics of Pickling - Hydrochloric Acid Continuous Plant Wastes - Rinses	138
32	Characteristics of Pickling - Hydrochloric Acid Continuous Plant Wastes - Fume Hood Scrubbers	138
33	Characteristics of Cold Rolling Plant Wastes	140
34	Characteristics of Hot Coatings - Galvanizing Plant Wastes	140
35	Characteristics of Hot Coatings - Terne Plate Plant Wastes	143
36	Characteristics of Cold Coatings - Halogen Tin Plant Wastes	N/A

DRAFT

TABLES (Cont'd)

NUMBER	TITLE	PAGE
37	Characteristics of Cold Coatings - Sulfonic Tin Plant Wastes	N/A
38	Characteristics of Cold Coatings - Alkaline Tin Plant Wastes	N/A
39	Characteristics of Cold Coatings - Chrome Plant Wastes	N/A
40	Industry Group - Water Intake	159
41	Hot Forming Operation Parameters	174
42	Pipe and Tubes Operation Parameters	174
43	Pickling Operation Parameters	175
44	Cold Rolling Operation Parameters	176
45	Hot Coatings - Galvanizing Operation Parameters	177
46	Hot Coatings - Terne Plate Operation Parameters	178
47	Cold Coatings - Chrome and Plating Operation Parameters	179
48	Wastewater Treatment Practices of Plants Visited in Study	192
49	Water Effluent Treatment Costs - Hot Forming Primary	199
50	Water Effluent Treatment Costs - Hot Forming Section	207
51	Water Effluent Treatment Costs - Hot Forming Flat	216
52	Water Effluent Treatment Costs - Pipe and Tubes	222
53	Water Effluent Treatment Costs - Pickling - Sulfuric Acid - Concentrates	246

DRAFT

TABLES (Cont'd)

NUMBER	TITLE	PAGE
54	Water Effluent Treatment Costs - Pickling - Sulfuric Acid - Rinses	247
55	Water Effluent Treatment Costs - Pickling - Continuous Sulfuric Acid	255
56	Water Effluent Treatment Costs - Pickling - Hydrochloric Acid - Concentrates	258
57	Water Effluent Treatment Costs - Pickling - Hydrochloric Acid - Rinses	260
58	Water Effluent Treatment Costs - Cold Rolling	276
59	Water Effluent Treatment Costs - Hot Coatings - Galvanizing	282
60	Water Effluent Treatment Costs - Hot Coatings - Terne Plate	283
61	Water Effluent Treatment Costs - Cold Coatings - Tin	N/A
62	Water Effluent Treatment Costs - Cold Coatings - Chrome	N/A
63	Control and Treatment Technology - Hot Forming Primary	331
64	Control and Treatment Technology - Hot Forming Section	334
65	Control and Treatment Technology - Hot Forming Flat	337
66	Control and Treatment Technology - Pipe and Tubes	341
67	Control and Treatment Technology - Pickling - Sulfuric Acid - Batch Concentrates	344
68	Control and Treatment Technology - Pickling - Sulfuric Acid - Rinses	347
69	Control and Treatment Technology - Pickling - Hydrochloric Acid - Concentrates - Alternate I	350

DRAF

TABLES (Cont'd)

NUMBER	TITLE	PAGE
70	Control and Treatment Technology - Pickling - Hydrochloric Acid - Rinses - Alternate I	353
71	Control and Treatment Technology - Pickling - Hydrochloric Acid - Concentrates and Rinses - Alternate II	355
72	Control and Treatment Technology - Cold Rolling - Recirculation	357
73	Control and Treatment Technology - Cold Rolling - Combination	359
74	Control and Treatment Technology - Cold Rolling - Direct Application	361
75	Control and Treatment Technology - Hot Coatings - Galvanizing	363
76	Control and Treatment Technology - Hot Coatings - Terne	366
77	Effluent Limitations Guidelines - Hot Forming Primary - BPCTCA	377
78	Effluent Limitations Guidelines - Hot Forming Section - BPCTCA	380
79	Effluent Limitations Guidelines - Hot Forming Flat - Hot Strip and Sheet - BPCTCA	384
80	Effluent Limitations Guidelines - Hot Forming Flat - Plate - BPCTCA	386
81	Effluent Limitations Guidelines - Pipe and Tubes - BPCTCA	390
82	Effluent Limitations Guidelines - Pickling - Sulfuric Acid - Batch Concentrates - BPCTCA	393
83	Effluent Limitations Guidelines - Pickling - Sulfuric Acid - Batch Rinses - BPCTCA	397
84	Effluent Limitations Guidelines - Pickling - Hydrochloric Acid - Concentrates - BPCTCA	400

DRAFT

TABLES (Cont'd)

NUMBER	TITLE	PAGE
85	Effluent Limitations Guidelines - Pickling - Hydrochloric Acid - Rinses - BPCTCA	404
86	Effluent Limitations Guidelines - Pickling - Hydrochloric Acid - Concentrates and Rinses - BPCTCA	410
87	Effluent Limitations Guidelines - Cold Rolling - Recirculation - BPCTCA	405
88	Effluent Limitations Guidelines - Cold Rolling - Combination - BPCTCA	413
89	Effluent Limitations Guidelines - Cold Rolling - Direct Application - BPCTCA	416
90	Effluent Limitations Guidelines - Hot Coatings - Galvanizing - BPCTCA	419
91	Effluent Limitations Guidelines - Hot Coatings - Terne - BPCTCA	422
92	Effluent Limitations Guidelines - Hot Forming Primary - BATEA	426
93	Effluent Limitations Guidelines - Hot Forming Section - BATEA	449
94	Effluent Limitations Guidelines - Hot Forming Flat - Hot Strip and Sheet - BATEA	453
95	Effluent Limitations Guidelines - Hot Forming Flat - Plate - BATEA	458
96	Effluent Limitations Guidelines - Pipe and Tubes - BATEA	461
97	Effluent Limitations Guidelines - Pickling - Sulfuric Acid - Batch Concentrates - BATEA	466
98	Effluent Limitations Guidelines - Pickling - Sulfuric Acid - Batch Rinses - BATEA	471
99	Effluent Limitations Guidelines - Pickling - Hydrochloric Acid - Concentrates - BATEA	474

TABLES (Cont'd)

NUMBER	TITLE	PAGE
100	Effluent Limitations Guidelines - Pickling - Hydrochloric Acid - Rinses - BATEA	479
101	Effluent Limitations Guidelines - Pickling - Hydrochloric Acid - Concentrates and Rinses - BATEA	487
102	Effluent Limitations Guidelines - Cold Rolling - Recirculation - BATEA	483
103	Effluent Limitations Guidelines - Cold Rolling - Combination - BATEA	491
104	Effluent Limitations Guidelines - Cold Rolling - Direct Application - BATEA	494
105	Effluent Limitations Guidelines - Hot Coatings - Galvanizing - BATEA	497
106	Effluent Limitations Guidelines - Hot Coatings - Terne - BATEA	501
107	Hot Forming and Cold Finishing Operations Projected Total Costs for Related Subcategories	506
108	Non-Process Operations Projected Total Costs for Related Categories and Subcategories	522
109	Non-Process Operations - Projected Total Costs For Related Categories and Subcategories	523
110	Hot Forming - Cold Finishing Operations - Projected Total Costs for Related Categories and Subcategories	524
111	Metric Units - Conversion Table	555
112	Classification by Subcategory	557

SECTION I

CONCLUSIONS

For the purpose of establishing effluent guidelines and standards of performance for the hot forming and cold finishing operations of the iron and steel industry, the industry was divided into subcategories as follows:

M. Hot Forming Primary
N. Hot Forming Section
O. Hot Forming Flat
P. Pipe and Tubes
Q. Pickling-Sulfuric Acid-Batch
R. Pickling-Hydrochloric Acid-Batch and Continuous
S. Cold Rolling
T. Hot Coat-Galvanizing
U. Hot Coat-Terne
V. Miscellaneous Runoffs
W. Cooling Water Blowdown
X. Utility Blowdown
Y. Maintenance Department Wastes
Z. Central Treatment

NOTE: Subcategories A through L relate to the Steelmaking Segment which was discussed in an earlier Development Document, EPA-440/1-74-024-a.

The selection of these subcategories was based upon distinct differences in type of products produced, production processes, raw materials used, wastewater volumes generated, pollutants generated, and control and treatment technologies employed. Subsequent waste characterizations of individual plants substantiated the validity of this subcategorization.

The waste characterizations of individual plants visited during this study, and the guidelines developed as a result of the data collected, relate only to the aqueous discharges from the facilities, excluding noncontact cooling waters.

The effluent guidelines established in this study are not dependent upon the raw water intake quality. The limitations were derived by determining the minimum flows, in volume per unit weight of product, that can be achieved by good water conservation techniques and by determining the effluent concentrations of the pollutant parameters that can be achieved by treatment technology. The product of these is the effluent limitations proposed.

The plant raw wasteloads reflects the pickup of contaminants across a production process in a single pass. It was necessary to establish the raw waste load in this manner in order to obtain a meaningful comparison of wastes generated during production from a range of plants surveyed. Some plants utilized once-through water systems, while many others used varying degrees of reuse and/or recycle.

As presented in this report, an initial capital investment of approximately 920.3 million (August 1971 dollars) with annual capital and operating costs of 144.1 million would be required by the industry to comply with the 1977 guidelines. However, this is a net increase of only 68.2 million above current (reference level) annual expenditures since much of the current costs for waste hauling can be discontinued upon installation of these BPCTCA treatment facilities. An additional capital investment of approximately 954.6 million with added annual capital and operating costs of about 181.2 million would be needed to comply with the 1983 guidelines. Costs may vary depending upon such factors as location, availability of land and chemicals, flow to be treated, treatment technology selected where competing alternatives exist, and the extent of preliminary modifications required to accept the necessary control and treatment devices.

The subcategories listed above together with this report represent Phase II of the study to establish effluent guidelines for the steel industry.

SECTION II

RECOMMENDATIONS

The proposed effluent limitation guidelines for the Forming and Finishing Segment of the Iron and Steel industry, representing the effluent quality obtainable through the application of the appropriate treatment and control technology available for each industry subcategory, are summarized as follows:

Part I - Best Practicable Control Technology Currently Available (BPCTCA - 1977)
Part II - Best Achievable Treatment Economically Achievable (BATEA - 1983)
Part III - Best Available Demonstrated Control Technology (BADCT - New Sources)

PART I - BEST PRACTICABLE CONTROL TECHNOLOGY CURRENTLY AVAILABLE (BPCTAC - 1977)

The proposed effluent limitations guidelines representing the effluent quality obtainable by existing point sources through the application of the best practicable control technology currently available (BPCTCA) for each industry subcategory are as follows:

M Hot Forming Primary

BPCTCA Effluent Limitations
Units: kg pollutant per kkg of product
or: lb pollutant per 1,000 lb of product

Pollutant Parameter	Maximum for any One Day Period Shall Not Exceed	Maximum Average of Daily Values for any Period of 30 Consecutive Days
(a) Rolling Operation:		
Suspended Solids	0.3753	0.1250
Oil and Grease	0.1125	0.0375
pH	6.0 to	9.0
(b) Hot Scarfing (1):		

Suspended Solids	0.1251		0.0417
Oil and Grease	0.0375		0.0125
pH	6.0	to	9.0

(l) Applies in addition to limitation stated immediately above, if the primary hot forming operation has a hot scarfer wet scrubber associated with the operation.

N Hot Forming Section

BPCTCA Effluent Limitations
Units: kg pollutant per kkg of product
or: lb pollutant per 1,000 lb of product

Pollutant Parameter	Maximum for any One Day Period Shall Not Exceed		Maximum Average of Daily Values for any Period of 30 Consecutive Days
Suspended Solids	1.8753		0.6251
Oil and Grease	0.5625		0.1875
pH	6.0	to	9.0

O Hot Forming Flat

BPCTCA Effluent Limitations
Units: kg pollutant per kkg of product
or: lb pollutant per 1,000 lb of product

Pollutant Parameter	Maximum for any One Day Period Shall Not Exceed		Maximum Average of Daily Values for any Period of 30 Consecutive Days
(a) Plate:			
Suspended Solids	2.5005		0.8335
Oil and Grease	0.7500		0.2500
pH	6.0	to	9.0
(b) Hot Strip and Sheet:			
Suspended Solids	3.4383		1.1461
Oil and Grease	1.0314		0.3438
pH	6.0	to	9.0

P Pipe and Tubes

BPCTCA Effluent Limitations
Units: kg pollutant per kkg of product
or: lb pollutant per 1,000 lb of product

Pollutant Parameter	Maximum for any One Day Period Shall Not Exceed	Maximum Average of Daily Values for any Period of 30 Consecutive Days
Suspended Solids	0.7815	0.2605
Oil and Grease	0.2343	0.0781
pH	6.0 to	9.0

Q Pickling-Sulfuric Acid-Batch

BPCTCA Effluent Limitations
Units: kg pollutant per kkg of product
or: lb pollutant per 1,000 lb of product

Pollutant Parameter	Maximum for any One Day Period Shall Not Exceed	Maximum Average of Daily Values for any Period of 30 Consecutive Days
(a) Concentrates:		
Suspended Solids	0.0219	0.0073
Oil and Grease(1)	0.0045	0.0015
Dissolved Iron	0.00045	0.00015
pH	6.0 to	9.0

(1) This load is allowed only when these wastes are treated in combination with cold rolling mill wastes.

(b) Rinse Waters:		
Suspended Solids	0.1251	0.0417
Oil and Grease(1)	0.0250	0.0083
Dissolved Iron	0.0025	0.00083
pH	6.0 to	9.0

(1) This load is allowed only when these wastes are treated in combination with cold rolling mill wastes.

R Pickling-Hydrochloric Acid-Batch and Continuous

BPCTCA Effluent Limitations

Units: kg pollutant per kkg of product
or: lb pollutant per 1,000 lb of product

Pollutant Parameter	Maximum for any One Day Period Shall Not Exceed	Maximum Average of Daily Values for any Period of 30 Consecutive Days
(a) Concentrates:		
Suspended Solids	0.0189	0.0063
Oil and Grease (1)	0.0039	0.0013
Dissolved Iron	0.00039	0.00013
pH	6.0 to	9.0

(1) This load is allowed only when these wastes are treated in combination with cold rolling mill wastes.

(b) Absorber Vent Scrubber(1):		
Suspended Solids	0.1251	0.0417
Oil and Grease(2)	0.0249	0.0083
Dissolved Iron	0.00249	0.00083
pH	6.0 to	9.0

(1) This load allowed in place of Hydrochloric Acid Pickling-Concentrate load as indicated in (a) above if the concentrate section has an acid regeneration unit with an absorber vent scrubber.

(2) This load is allowed only when these wastes are treated in combination with cold rolling mill wastes.

(c) Rinse Waters:		
Suspended Solids	0.1251	0.0417
Oil and Grease(2)	0.0249	0.0083
Dissolved Iron	0.00249	0.00083
pH	6.0 to	9.0

(1) This load is allowed only when these wastes are treated in combination with cold rolling mill wastes.

(d) Pickle Line Fume Scrubber Wastes (1):		
Suspended Solids	0.0312	0.0104
Oil and Grease(2)	0.0063	0.0021
Dissolved Iron	0.00063	0.00021
pH	6.0 to	9.0

(1) This limitation is allowed in addition to Hydrochloric Acid Pickling-Rinse effluent limitations if the pickle line has a fume hood scrubber.

(2) This load is allowed only when these wastes are treated in combination with cold rolling mill wastes.

S Cold Rolling

BPCTCA Effluent Limitations
Units: kg pollutant per kkg of product
or: lb pollutant per 1,000 lb of product

Pollutant Parameter	Maximum for any One Day Period Shall Not Exceed	Maximum Average of Daily Values for any Period of 30 Consecutive Days
(a) Recirculation:		
Suspended Solids	0.0078	0.0026
Oil and Grease	0.00312	0.00104
Dissolved Iron(1)	0.000312	0.000104
pH	6.0 to	9.0

(1) This load is allowed only when these wastes are treated in combination with pickle line wastewaters.

(b) Combination:		
Suspended Solids	0.1251	0.0417
Oil and Grease	0.0502	0.0167
Dissolved Iron (1)	0.00501	0.00167
pH	6.0 to	9.0

(1) This load is allowed only when these wastes are treated in combination with pickle line wastewaters.

(c) Direct Application		
Suspended Solids	0.3126	0.1042
Oil and Grease	0.1251	0.0417
Dissolved Iron(1)	0.0126	0.0042
pH	6.0 to	9.0

(1) This load is allowed only when these wastes are treated in combination with pickle line wastewaters.

T Hot Coatings-Galvanizing

BPCTCA Effluent Limitations
Units: kg pollutant per kkg of product
or: lb pollutant per 1,000 lb of product

Pollutant Parameter	Maximum for any One Day Period Shall Not Exceed	Maximum Average of Daily Values for any Period of 30 Consecutive Days
(a) Rinse Waters:		
Suspended Solids	0.3750	0.1250
Oil and Grease	0.1125	0.0375
Total Zinc	0.0375	0.0125
Hexavalent Chromium	0.00015	0.00005
Total Chromium	0.0225	0.0075
pH	6.0 to	9.0
(b) Fume Hood Scrubber (1):		
Suspended Solids	0.3750	0.1250
Oil and Grease	0.1125	0.0375
Total Zinc	0.0375	0.0125
Hexavalent Chromium	0.00015	0.00005
Total Chromium	0.0225	0.0075
pH	6.0 to	9.0

(1) Applies in addition to the limitations stated immediately above, if the galvanizing line has a fume hood scrubber.

U Hot Coatings-Terne

BPCTCA Effluent Limitations
Units: kg pollutant per kkg of product
or: lb pollutant per 1,000 lb of product

Pollutant Parameter	Maximum for any One Day Period Shall Not Exceed	Maximum Average of Daily Values for any Period of 30 Consecutive Days
(a) Rinse Waters:		
Suspended Solids	0.3750	0.1250
Oil and Grease	0.1125	0.0375
Total Lead	0.00375	0.00125

Total Tin	0.0375		0.0125
pH	6.0	to	9.0

(b) Fume Hood Scrubber(1):

Suspended Solids	0.3750		0.1250
Oil and Grease	0.1125		0.0375
Total Lead	0.00375		0.00125
Total Tin	0.0375		0.0125
pH	6.0	to	9.0

(1) Applies in addition to the limitations stated immediately above, if the terne line has a fume hood scrubber.

V Miscellaneous Runoffs - Storage Piles, Casting and Slagging

(a) Discharges from Coal, Limestone and Ore Storage Piles:

No limitations are established for BPCTCA.

(b) Discharges from Casting or Slagging Operations:

There shall be no discharge of process (i.e. contact) wastewater pollutants to navigable waters.

W Cooling Water Blowdown

Allowable load for discharge will be the loads determined by multiplying the measured flow by the following concentrations:

Pollutant Parameter	Maximum for any One Day Period Shall Not Exceed mg/l		Maximum Average of Daily Values for any Period of 30 Consecutive Days mg/l
Suspended Solids	150.0		50
Total Zinc	15.0		5.0
Hexavalent Chromium	0.06		0.02
Total Chromium	9.0		3.0
Phosphorus	24.0		8.0
pH	6.0	to	9.0

X Utility Blowdown

Allowable load for discharge will be the loads determined by multiplying the measured flow by the following concentration:

Pollutant Parameter	Maximum for any One Day Period Shall Not Exceed mg/l		Maximum Average of Daily Values for any Period of 30 Consecutive Days mg/l
Suspended Solids	150		50
pH	6.0	to	9.0

Y Maintenance Department Wastes

Allowable load for discharge will be the loads determined by multiplying the measured flow by the following concentrations:

Pollutant Parameter	Maximum for any One Day Period Shall Not Exceed mg/l		Maximum Average of Daily Values for any Period of 30 Consecutive Days mg/l
Suspended Solids	150		50
Oil and Grease	45		15
pH	6.0	to	9.0

Z Central Treatment

Allowable loads for discharge will be the sum of the loads from the regulated sources (1) plus the loads from the semi-regulated (2) and the unregulated sources (3). Loads from the semi-regulated sources are determined from the measured flow and the concentrations appropriate to that source. Loads from the unregulated sources are determined from the flows from the unregulated sources multiplied by the following concentrations:

Pollutant Parameter	Maximum for any One Day Period Shall Not Exceed mg/l	Maximum Average of Daily Values for any Period of 30 Consecutive Days mg/l
Suspended Solids	150	50

Oil and Grease	45		15
Total Zinc	15		5
Hexavalent Chromium	0.06		0.02
Total Chromium	9		3
Phosphorus	24		8
pH	6.0	to	9.0

(1) Regulated sources are those sources wherein the flows are limited, eg., subparts A through V. (2) Semi-regulated sources are those sources wherein the concentrations are limited but the flows are not limited, i.e., subparts W, X and Y. (3) Unregulated sources such as cooling water, etc., are sources for which no regulations apply.

PART II - BEST AVAILABLE TECHNOLOGY ECONOMICALLY ACHIEVABLE (BATEA - 1983)

The proposed effluent guidelines representing the effluent limitations quality obtainable by existing point sources through the application of the best available technology economically achievable (BATEA) for each industry subcategory are as follows:

M Hot Forming Primary

BATEA Effluent Limitations(1)
Units: kg pollutant per kkg of product
or: lb pollutant per 1,000 lb of product

Pollutant Parameter	Maximum for any One Day Period Shall Not Exceed	Maximum Average of Daily Values for any Period of 30 Consecutive Days
(a) Rolling Operation:		
Suspended Solids	0.0312	0.0104
Oil and Grease	0.0126	0.0042
pH	6.0 to	9.0
(b) Hot Scarfing(1):	included in (a)	

(1) No additional load is allowed for hot scarfing since scarfer scrubber water is part of the total primary mill recycle system.

N Hot Forming Section

BATEA Effluent Limitations
Units: kg pollutant per kkg of product
or: lb pollutant per 1,000 lb of product

Pollutant Parameter	Maximum for any One Day Period Shall Not Exceed		Maximum Average of Daily Values for any Period of 30 Consecutive Days
Suspended Solids	0.0468		0.0156
Oil and Grease	0.0189		0.0063
pH	6.0	to	9.0

O Hot Forming Flat

BATEA Effluent Limitations
Units: kg pollutant per kkg of product
or: lb pollutant per 1,000 lb of product

Pollutant Parameter	Maximum for any One Day Period Shall Not Exceed		Maximum Average of Daily Values for any Period of 30 Consecutive Days
(a) Plate:			
Suspended Solids	0.0468		0.0156
Oil and Grease	0.0189		0.0063
pH	6.0	to	9.0
(b) Hot Strip and Sheet:			
Suspended Solids	0.0468		0.0156
Oil and Grease	0.0189		0.0063
pH	6.0	to	9.0

P Pipe and Tubes

BATEA Effluent Limitations
Units: kg pollutant per kkg of product
or: lb pollutant per 1,000 lb of product

Pollutant Parameter	Maximum for any One Day Period Shall Not Exceed	Maximum Average of Daily Values for any Period of 30 Consecutive Days

Suspended Solids	0.0468		0.0156
Oil and Grease	0.0189		0.0063
pH	6.0	to	9.0

Q Pickling-Sulfuric Acid-Batch

BATEA Effluent Limitations
Units: kg pollutant per kkg of product
or: lb pollutant per 1,000 lb of product

Pollutant Parameter	Maximum for any One Day Period Shall Not Exceed	Maximum Average of Daily Values for any Period of 30 Consecutive Days
(a) Concentrates:		
Suspended Solids	No Discharge of Process	
Dissolved Iron	Wastewater Pollutants	
pH	to Navigable Waters (1)	

(1) Vacuum eductor condenser water is considered noncontact cooling water.

(b) Rinse Waters:		
Suspended Solids	No Discharge of Process	
Dissolved Iron	Wastewater Pollutants	
pH	to Navigable Waters	

R Pickling-Hydrochloric Acid-Batch and Continuous

BATEA Effluent Limitations
Units: kg pollutant per kkg of product
or: lb pollutant per 1,000 lb of product

Pollutant Parameter	Maximum for any One Day Period Shall Not Exceed	Maximum Average of Daily Values for any Period of 30 Consecutive Days
(a) Concentrates:		
Suspended Solids	0.0093	0.0031
Oil and Grease (1)	0.0039	0.0013
Dissolved Iron	0.00039	0.00013
pH	6.0 to 9.0	

(1) This load is allowed only when these wastes are treated in combination with cold rolling mill wastes.

(b) Absorber Vent Scrubber(1):

Suspended Solids	0.0093		0.0031
Oil and Grease(2)	0.0039		0.0013
Dissolved Iron	0.00039		0.00013
pH	6.0	to	9.0

(1) These limitations are allowed in place of Hydrochloric Acid Pickling-Concentrate Subcategory effluent limitations if the concentrate section has an acid regeneration unit equipped with an absorber vent scrubber.

(2) This load is allowed only when these wastes are treated in combination with cold rolling mill wastes.

(c) Rinse Waters:

Suspended Solids	0.0156		0.0052
Oil and Grease(1)	0.0063		0.0021
Dissolved Iron	0.00063		0.00021
pH	6.0	to	9.0

(1) This load is allowed only when these wastes are treated in combination with cold rolling mill wastes.

(d) Pickle Line Fume Scrubber Wastes(1):

Suspended Solids	0.0156		0.0052
Oil and Grease(2)	0.0063		0.0021
Dissolved Iron	0.00063		0.00021
pH	6.0	to	9.0

(1) This limitation is allowed in addition to Hydrochloric Acid Pickling-Rinse effluent limitations if the pickle line has a fume hood scrubber.

(2) This load is allowed only when these wastes are treated in combination with cold rolling mill wastes.

S Cold Rolling

BATEA Effluent Limitations

Units: kg pollutant per kkg of product
or: lb pollutant per 1,000 lb of product

Maximum Average of

Pollutant Parameter	Maximum for any One Day Period Shall Not Exceed	Daily Values for any Period of 30 Consecutive Days
(a) Recirculation:		
Suspended Solids	0.0078	0.0026
Oil and Grease	0.00312	0.00104
Dissolved Iron(1)	0.000312	0.000104
pH	6.0 to	9.0

(1) This load is allowed only when these wastes are treated in combination with pickle line wastewaters.

(b) Combination:		
Suspended Solids	0.1251	0.0417
Oil and Grease	0.0510	0.0167
Dissolved Iron(1)	0.0051	0.0017
pH	6.0 to	9.0

(1) This load is allowed only when these wastes are treated in combination with pickle line wastewaters.

(c) Direct Application:		
Suspended Solids	0.3126	0.1042
Oil and Grease	0.1251	0.0417
Dissolved Iron(1)	0.0126	0.0042
pH	6.0 to	9.0

(1) This load is allowed only when these wastes are treated in combination with pickle line wastewaters.

T Hot Coatings-Galvanizing

BATEA Effluent Limitations
Units: kg pollutant per kkg of product
or: lb pollutant per 1,000 lb of product

Pollutant Parameter	Maximum for any One Day Period Shall Not Exceed	Maximum Average of Daily Values for any Period of 30 Consecutive Days
(a) Rinse Waters:		
Suspended Solids	0.0312	0.0104
Oil and Grease	0.0126	0.0042

Total Zinc	0.00249		0.00083
Hexavalent Chromium	0.000024		0.000008
Total Chromium	0.000252		0.000084
pH	6.0	to	9.0

(b) Fume Hood Scrubber(1):

Suspended Solids	0.0468		0.0156
Oil and Grease	0.0189		0.0063
Total Zinc	0.00375		0.00125
Hexavalent Chromium	0.000039		0.000013
Total Chromium	0.000378		0.000126
pH	6.0	to	9.0

(1) Applies in addition to the limitation stated immediately above if the galvanizing line has a fume hood scrubber.

U Hot Coatings-Terne

BATEA Effluent Limitations
Units: kg pollutant per kkg of product
or: lb pollutant per 1,000 lb of product

Pollutant(1) Parameter	Maximum for any One Day Period Shall Not Exceed		Maximum Average of Daily Values for any Period of 30 Consecutive Days
(a) Rinse Waters:			
Suspended Solids	0.0312		0.0104
Oil and Grease	0.0126		0.0042
Total Tin	0.00249		0.00083
Total Lead	0.000312		0.000104
pH	6.0	to	9.0
(b) Fume Hood Scrubber(1):			
Suspended Solids	0.0468		0.0156
Oil and Grease	0.0189		0.0063
Total Tin	0.00375		0.00125
Total Lead	0.000468		0.000156
pH	6.0	to	9.0

(1) This limitation applies in addition to the limitation stated immediately above if the terne line has a fume hood scrubber.

V Miscellaneous Runoffs - Storage Piles, Casting and Slagging

(a) Discharges from Coal, Limestone and Ore Storage Piles:

Pollutant Parameter	Maximum for any One Day Period Shall Not Exceed mg/l	Maximum Average of Daily Values for any Period of 30 Consecutive Days mg/l
Suspended Solids	75*	25*
pH	6.0 to	9.0

*This concentration applies only when the rainfall rate is 2.5 inches or less in any preceeding five day period.

(b) Discharges from Casting or Slagging Operations:

There shall be no discharge of process (i.e. contact) wastewater pollutants to navigable waters.

W Cooling Water Blowdown

Allowable load for discharge will be the loads determined by multiplying the measured flow by the following concentrations:

Pollutant Parameter	Maximum for any One Day Period Shall Not Exceed mg/l	Maximum Average of Daily Values for any Period of 30 Consecutive Days mg/l
Suspended Solids	75.0	25.0
Total Zinc	6.0	2.0
Hexavalent Chromium	0.06	0.02
Total Chromium	0.6	0.2
Phosphorus	24.0	8.0
pH	6.0 to	9.0

X Utility Blowdown

Allowable load for discharge will be the loads determined by multiplying the measured flow by the following concentration:

Pollutant	Maximum for any One Day Period	Maximum Average of Daily Values for any Period of 30

Parameter	Shall Not Exceed mg/l	Consecutive Days mg/l
Suspended Solids	75	25
pH	6.0 to 9.0	

Y Maintenance Department Wastes

Allowable load for discharge will be the loads determined by multiplying the measured flow by the following concentrations:

Pollutant Parameter	Maximum for any One Day Period Shall Not Exceed mg/l	Maximum Average of Daily Values for any Period of 30 Consecutive Days mg/l
Suspended Solids	75	25
Oil and Grease	30	10
pH	6.0 to 9.0	

Z Central Treatment

Allowable loads for discharge will be the sum of the loads from the regulated sources (1) plus the loads from the semi-regulated (2) and the unregulated sources (3). Loads from the semi-regulated sources are determined from the measured flow and the concentrations appropriate to that source. Loads from the unregulated sources are determined from the flows from the unregulated sources multiplied by the following concentrations:

Pollutant Parameter	Maximum for any One Day Period Shall Not Exceed mg/l	Maximum Average of Daily Values for any Period of 30 Consecutive Days mg/l
Suspended Solids	75	25
Oil and Grease	30	10
Total Zinc	6	2
Hexavalent Chromium	0.06	0.02
Total Chromium	0.6	0.2
Phosphorus	24	8
pH	6.0 to 9.0	

(1) Regulated sources are those sources wherein the flows are limited, eg., subparts A through V. (2) Seimi-regulated sources are those sources wherein the concentrations are limited but the flows are not limited, i.e., subparts W, X and Y. (3) Unregulated sources such as cooling water, etc., are sources for which no regulations apply.

PART III - BEST AVAILABLE DEMONSTRATED CONTROL TECHNOLOGY (BADCT - New Sources)

The proposed effluent limitations guidelines representing the effluent quality attainable by new sources (NSPS) through the application of the best available demonstrated control technology (BADCT), processes, operating methods or other alternatives for each industry subcategory are as follows:

M Hot Forming Primary

NSPS Effluent Limitations
Units: kg pollutant per kkg of product
or: lb pollutant per 1,000 lb of product

Pollutant Parameter	Maximum for any One Day Period Shall Not Exceed(1)	Maximum Average of Daily Values for any Period of 30 Consecutive Days(1)
(a) Rolling Operation:		
Suspended Solids	0.0312	0.0104
Oil and Grease	0.0126	0.0042
pH	6.0 to	9.0
(b) Hot Scarfing(1):	included in (a)	

(1) No additional load is allowed for hot scarfing for NSPS, since scarfer scrubber water is intended to be part of the total primary mill recycle system.

N Hot Forming Section

NSPS Effluent Limitations
Units: kg pollutant per kkg of product
or: lb pollutant per 1,000 lb of product

Pollutant Parameter	Maximum for any One Day Period Shall Not Exceed		Maximum Average of Daily Values for any Period of 30 Consecutive Days
Suspended Solids	0.0468		0.0156
Oil and Grease	0.0189		0.0063
pH	6.0	to	9.0

O Hot Forming Flat

NSPS Effluent Limitations
Units: kg pollutant per kkg of product
or: lb pollutant per 1,000 lb of product

Pollutant Parameter	Maximum for any One Day Period Shall Not Exceed		Maximum Average of Daily Values for any Period of 30 Consecutive Days
(a) Plate:			
Suspended Solids	0.0468		0.0156
Oil and Grease	0.0189		0.0063
pH	6.0	to	9.0
(b) Hot Strip and Sheet			
Suspended Solids	0.0468		0.0156
Oil and Grease	0.0189		0.0063
pH	6.0	to	9.0

P Pipe and Tubes

NSPS Effluent Limitations
Units: kg pollutant per kkg of product
or: lb pollutant per 1,000 lb of product

Pollutant Parameter	Maximum for any One Day Period Shall Not Exceed		Maximum Average of Daily Values for any Period of 30 Consecutive Days
Suspended Solids	0.0468		0.0156
Oil and Grease	0.0189		0.0063
pH	6.0	to	9.0

Q Pickling-Sulfuric Acid-Batch

NSPS Effluent Limitations
Units: kg pollutant per kkg of product
or: lb pollutant per 1,000 lb of product

Pollutant Parameter	Maximum for any One Day Period Shall Not Exceed	Maximum Average of Daily Values for any Period of 30 Consecutive Days
(a) Concentrates:		
Suspended Solids	No Discharge of Process	
Dissolved Iron	Wastewater Pollutants	
pH	to Navigable Waters (1)	

(1) Vacuum eductor condenser water is considered noncontact cooling water.

(b) Rinse Waters:		
Suspended Solids	No Discharge of Process	
Dissolved Iron	Wastewater Pollutants	
pH	to Navigable Waters	

R Pickling-Hydrochloric Acid-Batch and Continuous

NSPS Effluent Limitations
Units: kg pollutant per kkg of product
or: lb pollutant per 1,000 lb of product

Pollutant Parameter	Maximum for any One Day Period Shall Not Exceed	Maximum Average of Daily Values for any Period of 30 Consecutive Days
(a) Concentrates:		
Suspended Solids	0.0093	0.0031
Oil and Grease (1)	0.0039	0.0013
Dissolved Iron	0.00039	0.00013
pH	6.0 to	9.0

(1) This load is allowed only when these wastes are treated in combination with cold rolling mill wastes.

(b) Absorber Vent Scrubber (1):		
Suspended Solids	0.0624	0.0208

Oil and Grease(2)	0.0249		0.0083
Dissolved Iron	0.00249		0.00083
pH	6.0	to	9.0

(1) These limitations are allowed in place of Hydrochloric Acid Pickling-Concentrate Subcategory effluent limitations if the concentrate section has an acid regeneration unit equipped with an absorber vent scrubber.

(2) This load is allowed only when these wastes are treated in combination with cold rolling mill wastes.

(c) Rinse Waters:

Suspended Solids	0.0156		0.0052
Oil and Grease(1)	0.0063		0.0021
Dissolved Iron	0.00063		0.00021
pH	6.0	to	9.0

(1) This load is allowed only when these wastes are treated in combination with cold rolling mill wastes.

(d) Pickle Line Fume Scrubber Wastes:

Suspended Solids	0.0156		0.0052
Oil and Grease(1)	0.0063		0.0021
Dissolved Iron	0.00063		0.00021
pH	6.0	to	9.0

(1) This load is allowed only when these wastes are treated in combination with cold rolling mill wastes.

S Cold Rolling

NSPS Effluent Limitations

Units: kg pollutant per kkg of product
or: lb pollutant per 1,000 lb of product

Pollutant Parameter	Maximum for any One Day Period Shall Not Exceed		Maximum Average of Daily Values for any Period of 30 Consecutive Days
(a) Recirculation:			
Suspended Solids	0.0078		0.0026
Oil and Grease	0.00312		0.00104
Dissolved Iron(1)	0.000312		0.000104
pH	6.0	to	9.0

(1) This load is allowed only when these wastes are treated in combination with pickle line wastewaters.

(b) Combination:

Suspended Solids	0.1251		0.0417
Oil and Grease	0.0501		0.0167
Dissolved Iron(1)	0.0051		0.0017
pH	6.0	to	9.0

(1) This load is allowed only when these wastes are treated in combination with pickle line wastewaters.

(c) Direct Application:

Suspended Solids	0.3126		0.1042
Oil and Grease	0.1251		0.0417
Dissolved Iron(1)	0.00126		0.0042
pH	6.0	to	9.0

(1) This load is allowed only when these wastes are treated in combination with pickle line wastewaters.

T Hot Coatings-Galvanizing

NSPS Effluent Limitations
Units: kg pollutant per kkg of product
or: lb pollutant per 1,000 lb of product

Pollutant Parameter	Maximum for any One Day Period Shall Not Exceed	Maximum Average of Daily Values for any Period of 30 Consecutive Days
(a) Rinse Waters:		
Suspended Solids	0.1875	0.0625
Oil and Grease	0.0750	0.0250
Total Zinc	0.0150	0.0050
Hexavalent Chromium	0.00015	0.00005
Total Chromium	0.00150	0.00050
pH	6.0 to	9.0
(b) Fume Hood Scrubber		
Suspended Solids	0.1875	0.0625
Oil and Grease	0.0750	0.0250
Total Zinc	0.0150	0.0050

Hexavalent Chromium	0.00015		0.00005
Total Chromium	0.00150		0.00050
pH	6.0	to	9.0

U Hot Coatings-Terne

NSPS Effluent Limitations
Units: kg pollutant per kkg of product
or: lb pollutant per 1,000 lb of product

Pollutant Parameter	Maximum for any One Day Period Shall Not Exceed		Maximum Average of Daily Values for any Period of 30 Consecutive Days
(a) Rinse Waters:			
Suspended Solids	0.1875		0.0625
Oil and Grease	0.0750		0.0250
Total Tin	0.0150		0.0050
Total Lead	0.00189		0.00063
pH	6.0	to	9.0
(b) Fume Hood Scrubber			
Suspended Solids	0.1875		0.0625
Oil and Grease	0.0750		0.0250
Total Tin	0.0150		0.0050
Total Lead	0.00189		0.00063
pH	6.0	to	9.0

V Miscellaneous Runoffs - Storage Piles, Casting and Slagging

(a) Discharges from Coal, Limestone and Ore Storage Piles:

Pollutant Parameter	Maximum for any One Day Period Shall Not Exceed mg/l		Maximum Average of Daily Values for any Period of 30 Consecutive Days mg/l
Suspended Solids	75*		25*
pH	6.0	to	9.0

*This concentration applies only when the rainfall rate is 2.5 inches or less in any preceeding five day period.

(b) Discharges from Casting or Slagging Operations:

There shall be no discharge of process (i.e. contact) wastewater pollutants to navigable waters.

W Cooling Water Blowdown

Allowable load for discharge will be the loads determined by multiplying the measured flow by the following concentrations:

Pollutant Parameter	Maximum for any One Day Period Shall Not Exceed mg/l	Maximum Average of Daily Values for any Period of 30 Consecutive Days mg/l
Suspended Solids	75.0	25.0
Total Zinc	6.0	2.0
Hexavalent Chromium	0.06	0.02
Total Chromium	0.6	0.2
Phosphorus	24.0	8.0
pH	6.0 to	9.0

X Utility Blowdown

Allowable load for discharge will be the loads determined by multiplying the measured flow by the following concentration:

Pollutant Parameter	Maximum for any One Day Period Shall Not Exceed mg/l	Maximum Average of Daily Values for any Period of 30 Consecutive Days mg/l
Suspended Solids	75	25
pH	6.0 to	9.0

Y Maintenance Department Wastes

Allowable load for discharge will be the loads determined by multiplying the measured flow by the following concentrations:

Pollutant Parameter	Maximum for any One Day Period Shall Not Exceed	Maximum Average of Daily Values for any Period of 30 Consecutive Days

	mg/l		mg/l
Suspended Solids	75		25
Oil and Grease	30		10
pH	6.0	to	9.0

Z Central Treatment

Central treatment only applies to existing sources.

SECTION III

INTRODUCTION

Purpose and Authority

Section 301(b) of the Act requires the achievement by not later than July 1, 1977, of effluent limitations for point sources, other than publicly owned treatment works, which are based on the application of the best practicable control technology currently available as defined by the Administrator pursuant to Section 304(b) of the Act. Section 301(b) also requires the achievement by not later than July 1, 1983, of effluent limitations for point sources, other than publicly owned treatment works, which are based on the application of the best available technology economically achievable which will result in reasonable further progress toward the national goal of eliminating the discharge of all pollutants, as determined in accordance with regulations issued by the Administrator pursuant to Section 304(b) to the Act. Section 306 of the Act requires the achievement by new sources of a Federal standard of performance providing for the control of the discharge of pollutants which reflects the greatest degree of effluent reduction which the Administrator determines to be achievable through the application of the best available demonstrated control technology, processes, operating methods, or other alternatives, including, where practicable, a standard permitting no discharge of pollutants.

Section 304(b) of the Act requires the Administrator to publish within one year of enactment of the Act, regulations providing guidelines for effluent limitations setting forth the degree of practicable control technology currently available and the degree of effluent reduction attainable through the application of the best control measures and practices achievable including treatment techniques, process and procedure innovations, operation methods and other alternatives.

Section 306 of the Act requires the Administrator, within one year after a category of sources is included in a list published pursuant to Section 306(b)(1)(A) of the Act, to propose regulations establishing Federal standards of performances for new sources within such categories. The Administrator published in the Federal Register of January 16, 1973, a list of 27 source categories. Publication of the list constituted announcement of the Administrator's

intention of establishing, under Section 306, standards of performance applicable to new sources within the iron and steel industry which was included within the list published January 16, 1973.

Summary of Methods Used for Development of the Effluent Limitations Guidelines and Standards of Performance

The effluent limitations guidelines and standards of performance proposed herein were developed in the following manner. The point source category was first studied for the purpose of determining whether separate limitations and standards would be required for different segments within a point source category. The analysis was based upon raw material used, product produced, manufacturing process employed, and other factors. The raw waste characteristics for each subcategory were then identified. This included an analyses of (1) the source and volume of water used in the process employed and the sources of waste and wastewaters in the plant; and (2) the constituents (including thermal) of all wastewaters including toxic constituents and other constituents which result in taste, odor, and color in water. The constituents of wastewaters which should be subject to effluent limitations guidelines and standards of performance were identified.

The full range of control and treatment technologies existing within each subcategory was identified. This included an identification of each distinct control and treatment technology, including both inplant and end-of-process technologies, which are existent or capable of being designed for each subcategory. It also included an identification in terms of the amount of constituents and the chemical, physical, and biological characteristics of pollutants, of the effluent level resulting from the application of each of the treatment and control technologies. The problems, limitations and reliability of each treatment and control technology and the required implementation time was also identified. In addition, the nonwater quality environmental impact, such as the effects of the application of such technologies upon other pollution problems, including air, solid waste, noise and radiation were also identified. The energy requirements of each of the control and treatment technologies were identified as well as the cost of the application of such technologies.

The information, as outlined above, was then evaluated in order to determine what levels of technology constituted the "best practicable control technology currently available,"

"best available technology economically achievable" and the "best available demonstrated control technology, processes, operating methods, or other alternatives." In identifying such technologies, various factors were considered. These included the total cost of application of technology in relation to the effluent reduction benefits to be achieved from such application, the age of equipment and facilities involved, the process employed, the engineering aspects of the application of various types of control techniques, process changes, nonwater quality environmental impact (including energy requirements) and other factors.

The data for identification and analyses were derived from a number of sources. These sources included EPA research information, EPA and State environmental personnel, trade associations, published literature, qualified technical consultation, and on-site visits including sampling programs and interviews at steel plants throughout the United States which were known to have above average waste treatment facilities. All references used in developing the guidelines for effluent limitations and standards of performance for new sources reported herein are listed in Section XIII of this document.

Operating plants were visited and information and samples were obtained from as high as seven plants in each of the subcategories. Both in-process and end-of-pipe data were obtained as a basis for determining water use rates and capabilities and effluent loads. The permit application data was of limited value for the purposes of this study since most of this data is on outfalls serving more than one operation and frequently was deficient in one or more of the components needed to correlate the data. The following capital and operating cost data sheet and test data sheets, e.g. EPA Form B, for raw waste, treated effluent, and service water were given to the plants, at the time of the sampling visit, for completion relative to the operation or operations studied at a given plant. The plants were requested to return this information, together with production data to the study contractor.

General Description of the Industry

Although the making of steel appears to be simple, many problems are encountered when a great quantity of raw materials and resources are brought together to ultimately produce steel. Steel mills may range from comparatively small plants to completely integrated steel complexes. Even the smallest of plants will generally represent a fair sized industrial complex. Because of the wide product range, the

operations will vary with each facility. The steel oriented may fail to realize that those unfamiliar with the steel industry may find it difficult to comprehend the complexity of this giant operation.

It was not until the mid-fifties that the industry began to look at iron and steelmaking as unit operations that required a better knowledge of the kinetics of competing reactions. Since this initial change in thinking, the adoption of advanced technology has become a way of life for the steel industry.

Approximately 92% of the 1972 total United States annual steel ingot production was produced by 15 major steel corporations. This total also represents 22.5% of the world total of 566,875,000 metric tons (625,000,000 ingot tons). Table 1 presents the breakdown by corporation. The year of record for steel ingot production was 1969 with 127,887,000 kkg (141,000,000 ingot tons) being produced.

Product Classification

The U. S. Bureau of Census, Census of Manufacturers, classifies the steel industry under Major Group 33 - Primary Metal Industries. This phase of study covers the hot forming and cold finishing segments of SIC Industry No. 3312, 3315, 3316, and 3317 as it pertains to the iron and carbon steel industry. This includes all processes, subprocesses, and alternate processes involved in the manufacture of intermediate or finished products in the above categories. A detailed list of product codes within the industry classification code 3312, 3315, 3316, and 3317 is included in Tables 2, 3, 4, and 5 respectively.

Anticipated Industry Growth

Steel in the United States is a $22.47 billion a year business. The industry is third in the nation, behind the automotive and petroleum industries, in the value of its total shipments and, with 487,000 employees, is second only to the automotive industry in the number of people who work for it. Over the decade since 1962, the steel industry has grown 60% from sales of $14.0 to $22.47 billion.

In 1972 steel climbed back from its worst market in over a decade showing a steady improvement in the early part of the year. Both raw steel production and finished mill product shipments were up substantially from 12 year lows reached late summer of 1971. As steel demand improved, so did steel employment. The number of persons carried on domestic

TABLE 1

United States Annual Steel Ingot Ton Production
Major Producers
1972

	Metric Tons/Year	Ingot Tons/Year
United States Steel	31.750,000	35,000,000
Bethlehem Steel	19,960,000	22,000,000
Republic Steel	9,980,000	11,000,000
National Steel	9,520,000	10,500,000
Armco Steel	7,710,000	8,500,000
Jones & Laughlin Steel	7,280,000	8,000,000
Inland Steel	6,800,000	7,500,000
Youngstown Sheet & Tube	5,440,000	6,000,000
Wheeling Pittsburgh	3,540,000	3,900,000
Kaiser	2,720,000	3,000,000
McLouth	1,819,000	2,000,000
Colorado Fuel & Iron	1,360,000	1,500,000
Sharon	1,360,000	1,500,000
Interlake	907,000	1,000,000
Alan Wood	907,000	1,000,000

TABLE 2

Product Classification by SIC Code (3312)
for the Iron and Steel Industry

BLAST FURNACES, STEEL WORKS, AND ROLLING AND FINISHING MILLS

Blast Furnaces (Including Coke Ovens), Steel Works, and Rolling Mills

Establishments primarily engaged in manufacturing hot metal, pig iron, silvery pig iron, and ferroalloys from iron ore and iron and steel scrap; converting pig iron, scrap iron and scrap steel into steel; and in hot rolling iron and steel into basic shapes such as plates, sheets, strips, rods, bars, and tubing. Merchant blast furnaces and by-product or beehive coke ovens are also included in this industry.

Armor plate, made in steel works or rolling mills
Axles, rolled or forged: made in steel works or rolling mills
Bars, iron: made in steel works or rolling mills
Bars, steel: made in steel works or hot rolling mills
Beehive coke oven products
Billets, steel
Blackplate
Blast furnace products
Blooms
Car wheels, rolled
Chemical recovery coke oven products
Coal gas, derived from chemical recovery coke
Coal tar crudes, derived from chemical recovery coke ovens
Plates, made in steel works or rolling mills
Rail joints and fastenings, made in steel works or rolling mills
Railroad crossings, iron and steel: made in steel works or rolling mills
Rails, iron and steel
Rails, rerolled or renewed
Rods, iron and steel: made in steel works or rolling mills
Rounds, tube
Sheet pilings, plain: iron and steel--made in steel works or rolling mills
Sheets, iron and steel: made in steel works or rolling mills
Shell slugs, steel: made in steel works or rolling mills
Skelp, iron and steel
Slabs, steel

TABLE 2 (Cont'd.)

Coke, produced in beehive ovens
Coke, produced in chemical recovery coke ovens
Cold rolled strip steel, flat bright: made in hot rolling mills
Distillates, derived from chemical recovery coke ovens
Fence posts, iron and steel: made in steel works or rolling mills
Ferroalloys, produced in blast furnaces
Flats, iron and steel: made in steel works and hot rolling mills
Forgings, iron and steel: made in steel works or rolling mills
Frogs, iron and steel: made in steel works or rolling mills
Galvanized hoops, pipes, plates, sheets, and strips: iron and steel
Gun forgings, iron and steel: made in steel works or rolling mills
Hoops, galvanized iron and steel: made in steel works or hot rolling mills
Hot rolled iron and steel products
Ingots, steel
Iron, pig
Iron sinter, made in steel mills
Nut rods, iron and steel: made in steel works or rolling mills
Pipe, iron and steel: made in steel works or rolling mills
Spiegeleisen, made in blast furnaces
Spikes and spike rods, made in steel works or rolling mills
Sponge iron
Stainless steel
Steel works producing bars, rods, plates, sheets, structural shapes, etc.
Strips, galvanized iron and steel: made in steel works or rolling mills
Strips, iron and steel: made in steel works or hot rolling mills
Structural shapes, iron and steel
Tar, derived from chemical recovery coke ovens
Terneplate
Ternes, iron and steel: long or short
Tie plates, iron and steel
Tin free steel
Tin plate
Tool steel
Tube rounds
Tubes, iron and steel: made in steel works or rolling mills
Tubing, seamless: steel
Well casings, iron and steel: made in steel works or rolling mills
Wheels, car and locomotive: iron and steel--"mitse"
Wire products, iron and steel: made in steel works or rolling mills
Wrought pipe and tubing, made in steel works or rolling mills

TABLE 3

PRODUCT CLASSIFICATION BY SIC CODE (3315)
FOR THE IRON AND STEEL INDUSTRY

STEEL WIRE DRAWING AND STEEL NAILS AND SPIKES

Establishments primarily engaged in drawing wire from purchased iron or steel rods, bars, or wire and which may be engaged in the further manufacture of products made from wire; establishments primarily engaged in manufacturing steel nails and spikes from purchased materials are also included in this industry. Rolling mills engaged in the production of ferrous wire from wire rods or hot rolled bars produced in the same establishment are classified in Industry 3312. Establishments primarily engaged in drawing nonferrous wire are classified in Group 335.

Brads, steel: wire or cut

Cable, steel: insulated or armored

Horseshoe nails

Nails, steel: wire or cut

Spikes, steel: wire or cut

Staples, steel: wire or cut

Tacks, steel: wire or cut

Wire, ferrous

Wire products, ferrous: made in wire drawing plants

Wire, steel: insulated or armored

TABLE 4

PRODUCT CLASSIFICATION BY SIC CODE (3316)
FOR THE IRON AND STEEL INDUSTRY

COLD ROLLED STEEL SHEET, STRIP, AND BARS

Establishments primarily engaged in (1) cold rolling steel sheets and strip from purchased hot rolled sheets; (2) cold drawing steel bars and steel shapes from purchased hot rolled steel bars; and (3) producing other cold finished steel. Establishments primarily engaged in the production of steel, including hot rolled steel sheets, and further cold rolling such sheets are classified in Industry 3312.

Cold finished steel bars

Cold rolled steel strip, sheet, and bars: not made in hot rolling mills

Corrugated iron and steel, cold rolled

Flat bright steel strip, cold rolled: not made in hot rolling mills

Razor blade strip steel, cold rolled: not made in hot rolling mills

Sheet steel, cold rolled: not made in hot rolling mills

Wire, flat: cold rolled strip

TABLE 5

PRODUCT CLASSIFICATION BY SIC CODE (3317)
FOR THE IRON AND STEEL INDUSTRY

STEEL PIPES AND TUBES

Establishments primarily engaged in the production of welded or seamless steel pipe and tubes and heavy riveted steel pipe from purchased materials. Establishments primarily engaged in the production of steel, including steel skelp or steel blanks, tube rounds, or pierced billets, are classified in Industry 3312.

Boiler tubes, wrought: welded, lock joint, and heavy riveted - not made in rolling mills

Conduit: welded, lock joint, and heavy riveted - not made in rolling mills

Pipe, seamless steel: not made in rolling mills

Pipe, wrought: welded, lock joint, and heavy riveted - not made in rolling mills

Tubes, seamless steel: not made in rolling mills

Tubing, mechanical and hypodermic sizes: not made in rolling mills

Well casing, wrought: welded, lock joint, and heavy riveted - not made in rolling mills

Wrought pipe and tubes: welded, lock joint, and heavy riveted - not made in rolling mills

steelmaker payrolls increased steadily during the first quarter, after hitting a 32 year low in November, 1971. Just how fast the economic position of the nation's steel industry improves, however, depends to a large extent on one important imponderable: imports. In the first two months of 1972, for instance, foreign steel accounted for one-seventh of the nation's apparent steel consumption.

General Description of the Operations

The hot forming and cold finishing operations exist in a variety that makes simple classification and description difficult. In general, the hot forming primary mills reduce ingots to slabs or blooms whereas the secondary mills reduce slabs or blooms to billets, plates, shapes, strip, etc. The steel finishing operations involve a number of processes that do little to alter the dimensions of the hot rolled product, but which impart desirable surface or mechanical characteristics to the product. The product flow of these typical steel mill operations is shown in Figure 1.

It is possible, and often economical, to roll ingots directly through the bloom, slab, or billet stages into more refined and even finished steel products in one mill in a continuous operation, frequently without any reheating. Large tonnages of standard rails, beams, and plates are produced regularly by this practice from ingots of medium to large size. Most of the ingot tonnage, however, is rolled into blooms, slabs, or billets in one mill, following which they are cooled, stored, and eventually rolled in other mills or forged.

The basic operation in a primary mill is the gradual compression of the steel ingot between the surfaces of two rotating rolls, and the progression of the ingot through the space between the rolls. The physical properties of the ingot prohibit making the total required deformation of the steel in one pass through the rolls, so a number of passes in sequence are always necessary. As the ingot enters the rolls, high pressure water jets remove surface scale. The ingot is passed back and forth between the horizontal and vertical rolls while manipulators turn the ingot from time to time so that it is well worked on all sides. When the desired shape has been achieved in the rolling operation, the end pieces or crops are removed by electric or hydraulic shears. The semi-finished pieces are stored or sent to reheating furnaces for subsequent rolling operations.

Ever increasing attention is being devoted to the conditioning of semi-finished products as the requirement

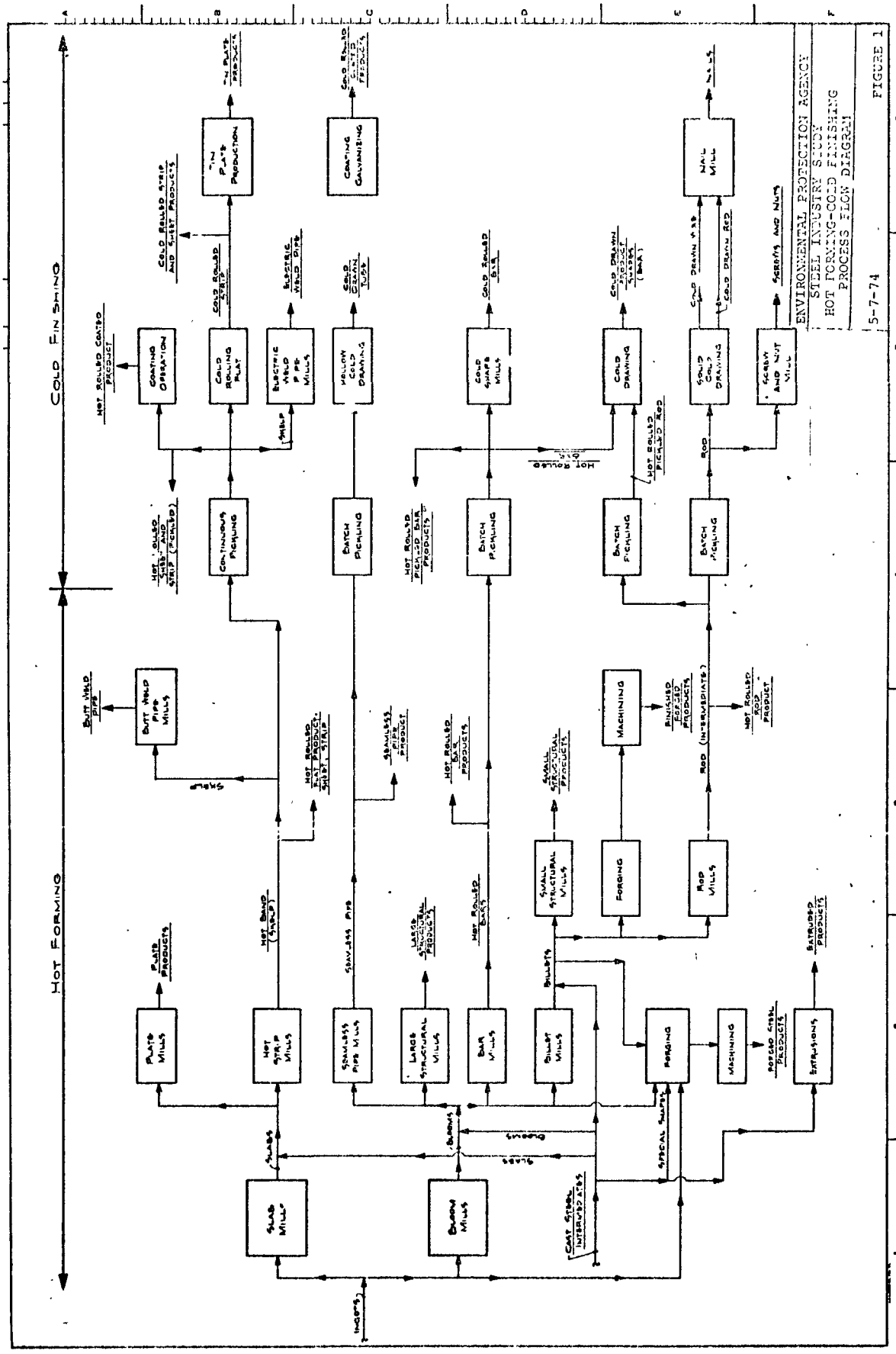
ENVIRONMENTAL PROTECTION AGENCY
STEEL INDUSTRY STUDY
HOT FORMING-COLD FINISHING
PROCESS FLOW DIAGRAM
5-7-74
FIGURE 1
COLD FINISHING
HOT FORMING
INGOTS
SLAB MILLS
BLOOM MILLS
PLATE MILLS
HOT STRIP MILLS
SEAMLESS PIPE MILLS
LARGE STRUCTURAL MILLS
BAR MILLS
BILLET MILLS
SMALL STRUCTURAL MILLS
FORGING
ROD MILLS
MACHINING
EXTRUSIONS
PLATE PRODUCTS
HOT ROLLED SHEET AND STRIP (PICKLED)
BUTT WELD PIPE
BUTT WELD PIPE MILLS
HOT ROLLED FLAT PRODUCTS, SHEET, STRIP
SEAMLESS PIPE PRODUCT
HOT ROLLED BARS
HOT ROLLED PICKLED BAR PRODUCTS
SMALL STRUCTURAL PRODUCTS
MACHINING
FINISHED FORGED PRODUCTS
HOT ROLLED ROD PRODUCT
ROD (INTERMEDIATE)
EXTRUSIONS
COST STEEL INTERMEDIATES
SPECIAL SHAPES
BLOOMS
SLABS
BILLETS
COATING OPERATION
HOT ROLLED COATED PRODUCT
COLD ROLLING MILL
COLD ROLLED STRIP
COLD ROLLED STRIP AND SHEET PRODUCTS
TIN PLATE PRODUCTION
TIN PLATE PRODUCTS
ELECTRIC WELD PIPE MILLS
COATING GALVANIZING
COLD ROLLED COATED PRODUCTS
YELLOW COLD DRAWING
COLD DRAWN TUBE
CONTINUOUS PICKLING
BATCH PICKLING
COLD SHAPE MILLS
COLD DRAWN BAR
COLD DRAWING
COLD DRAWN PRODUCT SHAPES (BAR)
SOLID COLD DRAWING
COLD DRAWN ROD
NAIL MILL
NAILS
SCREW AND NUT MILL
SCREWS AND NUTS
HOT ROLLED PICKLED ROD

for high qualities of steel products increases. Major elements in this area involve the need for removing surface defects from blooms, billets, and slabs prior to shaping, as by rolling into a product for the market. Such defects as rolled seams, light scabs, checks, etc., generally retain their identity during subsequent forming processes and result in products of inferior quality.

These surface defects may be removed by hand chipping, machine chipping, scarfing, grinding, milling, and hot steel scarfing. The various mechanical means of surface preparation are those common in all metal working amd machine shop operations. Scarfing is a process of supplying streams of oxygen as jets to the surface of the steel product under treatment, while maintaining high surface temperatures that result in rapid oxidation and localized melting of a thin layer of the metal. The process may be a manual one consisting of the continuous motion of an oxyacetylene torch along the length of the piece undergoing treatment. In recent years the so-called hot scarfing machine has come into wide use. This is a production machine adapted to remove a thin layer (1/8 in. or less) of metal from all steel passed through the machine in a manner analogous to the motion through rolling mills.

Reheating is necessary throughout the rolling operation whenever the temperature of the metal being worked falls below that necessary to retain the required plasticity. Reheating furnaces are of two general classes, batch and continuous types. Batch furnaces are those in which the charged material remains in a fixed position on the hearth until heated to rolling temperature. Continuous furnaces are those in which the charged material moves through the furnace and is heated to rolling temperature as it progresses toward the exit. One unique type of reheating furnace is the rotary hearth type used frequently for heating rounds in tube mills and for heating short lengths of blooms or billets for forging. The rotary hearth type permits external walls and roof to remain stationary while the hearth section of the furnace revolves. Batch furnaces vary in size from those with hearths of only a few feet square to those 20 ft in depth by 50 ft long; some modern continuous furnaces have hearths 80 to 90 ft long.

Plates are classified, by definition, according to certain size limitations to distinguish them from sheet, strip, and flat bars. According to this classification, plates are generally considered to be those flat hot-rolled finished products that are more than 8 in. wide and generally 0.23 in. or more thick, or over 48 in. wide and at least 0.18

in. thick. Sequence of operations for plate mills is heating of slabs, descaling, rolling, leveling, cooling, and shearing. Most plate mills use continuous type heating furnaces. Descaling in modern plate mills is accomplished by hydraulic sprays impinging on both top and bottom surfaces and operating at pressures up to 1,500 lbs per sq. in. Temperature variation in the plate from the front to the back is a problem of particular importance in rolling plates, as is the care that must be exercised in cooling the rolled product so as to avoid distortion. Plate rolling mills are generally considered in two very broad design classifications. One type includes the universal mills which are characterized by vertical rolls preceding and following the horizontal rolls; such a mill produces a product of a width which conforms to narrow tolerances. The second type of mill is the sheared plate mill which may or may not include edge working equipment.

A wide variety of steel shapes are rolled from blooms; these shapes include structural sections such as I-beams, channels, angles, wide flanged beams, H-beams, sheet piling, rails, and numerous special sections. The heating of the bloom for large sections is usually done in batch type furnace, although some newer mills use continuous furnaces. A typical mill consists of a two high reversing breakdown stand in which initial shaping is accomplished, followed by a group of three roll stands in train where the rolling process is completed; these mills are known as roughing stands, intermediate stands, and finishing stands. Several passes of the material are made back and forth through the breakdown, roughing and intermediate mills; a single pass is usually made through the finishing stand. The sequence of operations then consists of heating bloom, rolling to proper contour dimensions, cutting while hot to lengths that can be handled, cooling to ambient temperature, straightening, cutting to ordered lengths, and shipping.

Merchant-bar, rod, and wire mills produce a wide variety of products in continuous operations ranging from shapes of small size through bars and rods. The designations of the various mills as well as the classification of their products are not very well defined within the industry; in general, the small cross-sectional area and very long lengths distinguish the products of these mills. Raw materials for these mills are reheated billets. Many older mills use hand looping operations in which the material is passed from mill stand to mill stand by hand; newer mills use mechanical methods of transferring the material from stand to stand. As with other rolling operations the billet is progressively squeezed and shaped to the desired product

dimensions in a series of rolls. Water sprays are used throughout the operation to remove scale.

The continuous hot strip mill utilizes slabs which are brought to rolling temperatures in continuous reheating furnaces; the conditioned slabs pass through scale breakers and high pressure water sprays which dislodge the loosened scale. A series of roughing stands and a rotary crop shear produce a section that can be finished to a coil of the proper weight and gauge. The second scale breaker and high pressure water sprays precede the finishing stand train in which the final size reductions are made. Cooling water is applied through sprays on the run-out table, and the finished strip is coiled. Such a mill can turn a thick 6 ft slab of steel into a thin strip or sheet a quarter of a mile long in three minutes or less. The modern hot strip mill produces a product which may be up to 96 in. wide, although the most common width in newer mills is 80 in. The product of the hot strip mill may be sold as produced, or used within the mill for further processing in cold reduction mills, and for plated or coated products.

Welded tubular products are made from hot-rolled skelp with square or slightly beveled edges, the width and thickness of the skelp being selected to suit the various sizes and wall thicknesses to be made. The coiled skelp is uncoiled, heated, and fed through forming and welding rolls where the edges are pressed together at high temperature to form a weld. Welded pipe or tube can also be made by the electric weld process, where the weld is made by either fusion or resistance welding.

Seamless tubular products are made by rotary piercing of a solid round bar or billet, followed by various forming operations to produce the required size and wall thickness.

Correct surface preparation is the primary and most important requirement for satisfactory application of protective coatings to steel. Without a properly cleaned surface, even the most expensive coatings will fail to adhere or to prevent rusting of the steel base. A variety of cleaning methods are utilized to insure good surface preparation for subsequent coating. The steel surface must also be cleaned at various stages during production to insure that oxides formed on the surface are not worked into the finished product causing marring, staining, or other surface imperfections.

Pickling is the process of chemically removing oxides and scale from the surface of the steel by the action of water

solutions of inorganic acids. While pickling is only one of several methods of removing undesirable surface oxides, this method is the most widely used in the manufacture of finished steel products, due to comparatively low operating cost and ease of operation.

Some products such as tubes and wire are pickled in batch operations; that is, the product is immersed in an acid solution and allowed to remain in this solution until the scale or oxide film is removed. The material is lifted from the bath, allowed to drain, and rinsed by sequential immersion in rinse tanks.

Pickling lines for hot-rolled strip operate continuously on coils that are welded together, passed through the pickler, then sheared and recoiled. The steel passes through the pickler countercurrently to the flow of the acid solution. Most plant carbon steel is pickled with sulfuric or hydrochloric acid; stainless steels are pickled with hydrochloric, nitric, and hydrofluoric acids. Various organic chemicals are used in pickling to inhibit acid attack on the base metal, while permitting preferential attack on the oxides; wetting agents are used to improve the effective contact of the acid solution with the metal surface. As in the batch operation the steel passes from the pickling bath through a series of rinse tanks.

Solvents clean metal surfaces by dissolving and diluting foreign matter such as oil, grease, soil, and drawing and cutting compounds. Oil or grease may be removed by wiping or scrubbing the surface with solvent and clean rags or brushes. The steel may also be completely immersed in the solvent, or solvent sprays may be used, or the steel may be subject to vapor degreasing in equipment in which vaporized solvent condenses on the surfaces to be cleaned. Solvents used include mineral spirits, naphthenes, and some chlorinated hydrocarbons.

Alkaline cleaners are used where mineral and animal fats and oils must be removed. Mere dipping in solutions of various compositions, concentrations, and temperatures is often satisfactory. The use of electrolytic cleaning may be advisable for large scale production, or where this methodd yields a cleaner product. Caustic soda, soda ash, alkaline silicates and phosphates are common alkaline cleaning agents. Sometimes the addition of wetting agents to the cleaning bath will facilitate cleaning.

Blast cleaning utilizes abrasives such as sand, steel, iron grit, or shot which impinges at high velocity against the

surfaces to be cleaned, either by compressed air in a nozzle type blast cleaning apparatus, or by centrifugal force in rotary type blasting cleaning machines. Such methods usually result in a roughened surface and the degree of roughness must be regulated to be satisfactory for the intended use. Newer methods of blast cleaning are said to produce smooth finishes and, as such, promise to substitute for pickling as a cleaning method.

Steel finishing operations involve a number of processes which do little to alter the dimensions of the hot-rolled product, but which impart desirable surface or mechanical characteristics to the product. Such processes include cold rolling, cold reduction, cold drawing, tin-plating, galvanizing, coating with other metals, coating with organic compounds as well as inorganic compounds, and tempering.

Cold reduced, flat rolled products are made by cold-rolling pickled strip; the thickness is reduced 25% to 99% in this operation and a smooth, dense surface is produced. The product may be sold as cold reduced, but is usually heat treated.

Cold reduction generates heat that is dissipated by flood lubrication in which palm oil or synthetic oils are emulsified in water and directed in jets against the rolls and the steel surface during rolling. Cold reduced strip is cleaned with alkaline detergent solutions to remove the rolling oils prior to coating operations. Electrolysis is frequently used in such cleaning operations. Cold-rolling mills are used to give steel products a smooth, lustrous finish, with little reduction in thickness.

Tin-plate is made from cleaned, and pickled, cold reduced strip by either the electrolytic or hot-dip process. In this country more than 80% of the tin-plate is produced by the electrolytic process; the hot-dip process is rapidly becoming obsolete as a major tin-plating method. The hot-dip process consists of passing the steel through a light pickling solution and then through the tin pot which consists of a flux, molten tin, and a bath of palm oil. Electroloytic processes will be included in the final Development Document for the electroplating of common and precious metals segment of the Electroplating Point Source Category 40 CFR 413 to be published on a future date.

Hot-dipped galvanized sheets are produced on either sheet or continuous lines. The process consists essentially of a light pickle in hydrochloric acid and application of the zinc coating by dipping through the pot containing molten

zinc. Variations in continuous operations include alkaline cleaning, continuous annealing in controlled atmosphere furnaces, and several fluxing techniques.

In recent years, steel products coated with various synthetic resins have become commercially important. Other steel products are produced with coatings of various metals and inorganic materials. Several major tin-plate manufacturers are currently substituting chromium plating for tin-plating for the container industry.

SECTION IV

INDUSTRY SUBCATEGORIZATION

An evaluation of the hot forming and cold finishing operations was necessary to determine if subcategorization would be required in order to prepare effluent guidelines which would be broadly applicable and yet representative and appropriate for the operations and conditions to be controlled. From this evaluation it was determined that fourteen subcategories would be required in order to develop an adequate set of guidelines for the hot forming and cold finishing segment of the Iron and Steel Industry. These subcategories are as follows:

M. Hot Forming Primary

N. Hot Forming Section

O. Hot Forming Flat

P. Pipe and Tubes

Q. Pickling-Sulfuric Acid-Batch

R. Picling-Hydrochloric Acid-Batch and Continuous

S. Cold Rolling

T. Hot Coat-Galvanizing

U. Hot Coat-Terne

V. Miscellaneous Runnoffs

W. Cooling Water Blowdown

X. Utility Blowdown

Y. Maintenance Department Wastes

Z. Central Treatment

In formulating these subcategories a knowledge of the various operations was required.

Description of Operations to Hot Form and Cold Finish Steel

Hot Forming

Hot forming defines the initial stages in forming useful products from steel ingots by hot rolling. The initial stages consist of a series of hot rolling operations in which the steel ingot cross-section is reduced to either a square, oblong, or rectangular cross-sectional shape and proportionately increased in length. Steel ingots are originally tapered and 2 to 3 ft in cross-section and 5 to 9 ft in height.

The first rolling mill stages of the hot forming operations are identified as primary breakdown mills called blooming or slabbing mills. The cross-section of final rolled product determines whether the mill is identified as a blooming or slabbing mill. Generally slabbing mills produce rectangular slab shapes 2 in. to 6 in. thick and 24 in. to 60 in. wide and blooming mills in the range of 6 in. x 6 in. to 12 in. x 12 in. square blooms in cross-section and lengths of products may be up to 90 ft. The primary mills furnish steel slabs or blooms either directly or through reheating furnaces to secondary finishing or section mills. The slabbing mills furnish slabs to flat rolling mills, such as hot strip mills or plate mills; and blooming mills furnish blooms for billet mills, bar and rod mills, structural and rail mills, narrow strip mills, and beam mills. Products from the bar, rod, and narrow strip (sometimes referred to as skelp) mills, can be further rolled to produce pipe or tubing.

Many of the primary mills are presently being replaced by the continuous casting process referred to as billet, bloom, or slab casting machines. The casting machines then in turn furnish the steel slabs or blooms to the section mills. For description and effluent guidelines for continuous casting, see Phase I Report.

The steel products from the section and flat rolling mills are sometimes further cold rolled, cleaned in pickling operations and special coatings added such as galvanizing, terne plate, etc. These operations and prcoesses are described under steel finishing.

Hot Forming - Primary (Blooming and Slabbing Mills):

The basic operation of a primary mill is the gradual cross-sectional reduction of a hot steel ingot between the surfaces of two rotating steel rollers and the progression of the ingot through the space between the rolls.

The hot steel ingots are transferred to the primary mills for rolling from soaking pit furnaces which provide for

uniform heating of the steel ingots to the desired rolling temperature, usually 1,180° to 1,340°C (2,156° to 2,444°F) and also acts as a storage area to compensate for production variations in the flow of steel ingots between the steelmaking facilities and primary rolling mills. The soaking pit furnaces consist of square, rectangular, or circular, fuelfired (oil, gas, etc.) refractory lined pits constructed with the top of pits several feet above ground level and installed usually in rows under cover of a building adjacent or within the primary mill to be served. The ingots are placed into the soaking pits in an upright position through openings in the top. Removable covers close the pit openings.

The soaking pit furnace bottoms are made up using a 12 in. to 16 in. thick bed of coke breeze and when the bed becomes burned and contaminated with iron oxide scale, and other alien material, it is removed through cinder holes in the furnace pit bottoms and new 12 in. to 16 in. bed is installed.

The pits are spanned by one or more cranes equipped with ingot lifting tongs for placing and removing the steel ingots as required. The crane removes the properly heated steel ingots and places them into an electrically-driven ingot transfer car which automatically delivers the ingots to the primary rolling mill.

After the steel ingot is delivered to the primary mill, it is generally weighed on a scale and, if required, turned 180° on a turntable so the top of the ingot is the last section to enter the rolling mill. The ingot is then delivered from the weigh scale table across motor-driven table rolls to the rolling mill stand. The rolling mill stand housing contains the rolls for reduction of the hot steel ingot. Mills are generally classed according to the number of rolls, and the diameter and length of rolls in the first mill stand. Also, the mills can be identified as reversing, tandem, etc. The term "two high reversing mill" refers to two rolls in the mill stand, and in reducing the steel ingot, it is passed back and forth through the rolls (reversing) and is defined by the number of passes, which may number as many as five to reach the proper size of slab or bloom.

Tandem refers to a single pass through a multiple of single roll stands, thus eliminating the need for reversing the ingots. Mills can be two high, three high, four high, etc.

During the rolling operations, cooling water is sprayed externally over the table and mill stand rolls. This water is discharged to trenches beneath the rolling mill equipment. When the steel ingot enters the rolling mill stands, high pressure (2,000 psi) descaling water is sprayed over the hot steel ingot to flush away any iron oxide scale that forms. Generally, about 4% of this cooling water evaporates, and the balance is discharged to an iron oxide scale and water collection system. Iron oxide scale generation may amount to 8-10% of the throughput steel production.

Primary mills are generally rated on the tons of finished rolled product the mill produces on an hourly basis. For example, one slabbing mill producing 14 in. x 82 in. slabs is rated at 630 tons/hour, and a blooming mill producing 9-1/2 in. x 11 in. size is rated at 125 tons/hour.

After the product has been reduced to the proper size in the rolling mill stand, it is transferred via motor-driven mill table rolls to the shear where the product is cut into proper lengths for the section or flat rolling mills. The last portion of the rolled product is sheared off and wasted to a scrap bin for recycling back to the steelmaking facilities. This section contains impurities, etc., from the original steel ingot and is referred to as the "crop" ends.

When the product is sent to the secondary mills for further rolling, any imperfections in the surface of the steel product will produce a poor finish in the section or flat mills product. Therefore, the steel product from the primary mills is generally hand scarfed, automatically scarfed, machine ground or chipped or hand or machine gouged to remove these surface imperfections before rolling in the section mills. Many primary mills have automatic scarfing facilities for the surface finishing and are installed between the rolling mill stands and shear. The scarfing operation consists of passing the hot steel product through natural gas-fired preheat burners and then applying high pressure, pure oxygen through nozzles to the steel surface which removes from 3/32 in. to 3/16 in. thickness of the steel slab. High pressure water sprays (150 psig) flush the slag from the steel surface as it is generated. All the slag and water is discharged into a pit beneath the scarfer machine. Low pressure (40 psig) mill water is also used to spray exposed scarfer equipment to protect the equipment from heat and flying slag particles. The hot steel scarfing results in the generation of appreciable quantities of smoke and fume, the quantity and density depending upon steel

analyses, oxygen pressure, etc. It is necessary to collect and discharge the smoke and fume by means of a suitable exhaust system consisting of a hood over the roll tables, exhaust duct system, dust collector, and fan. Older systems discharged the smoke and fume directly to the atmosphere but the newer scarfer systems are installing dust collection systems with either wet electrostatic precipitators or high energy scrubbers. The smoke solids generated are submicron iron oxide particles, yellowish-brownish in color. The scarfing operation produces about 5 grams per KKG (35 grains of smoke solids per pound) of steel removed.

The exhaust system volumes may vary between 9,400 to 47,000 l/sec (20,000 to 100,000 cfm) consisting mainly of air (nitrogen and oxygen) and small percentages of CO_2 (1.5%) and CO (0.6%). Resulphurized steels, when scarfed, will produce acidic water discharges.

After the product is sheared to length, it is transferred to cooling beds and allowed to cool. Some installations will couple a billet mill directly to the blooming mill, and then the product is transferred directly without cooling and is rolled into a consumer product such as hot-rolled rounds and bars.

More specific details of the blooming and slabbing operations are shown in Figure 2.

Hot Forming - Section

Billets

Blooms from the primary mill are conveyed directly to the billet mill without reheating. The billets are further processed to produce materials with small sections, such as tube rounds, bar and rod, wire, small sections, and special products.

Modern billet mills utilize continuous lines which have alternate horizontal and vertical stands. The blooms are normally passed through hot-scarfing machines after leaving the bloom shears. The scarfing head of the machine contains oxyacetylene burner nozzles to remove defects from the surface of the blooms. Fume control equipment is required, and water sprays carry the iron oxide waste through a trench under the mills to a collection system. Metal loss in the scarfing operation is generally 2% to 3% of the product. The bloom is now conveyed to the continuous billet mill stands. The continuous mill consists of a series of roll stands, arranged one after the other so that the piece to be

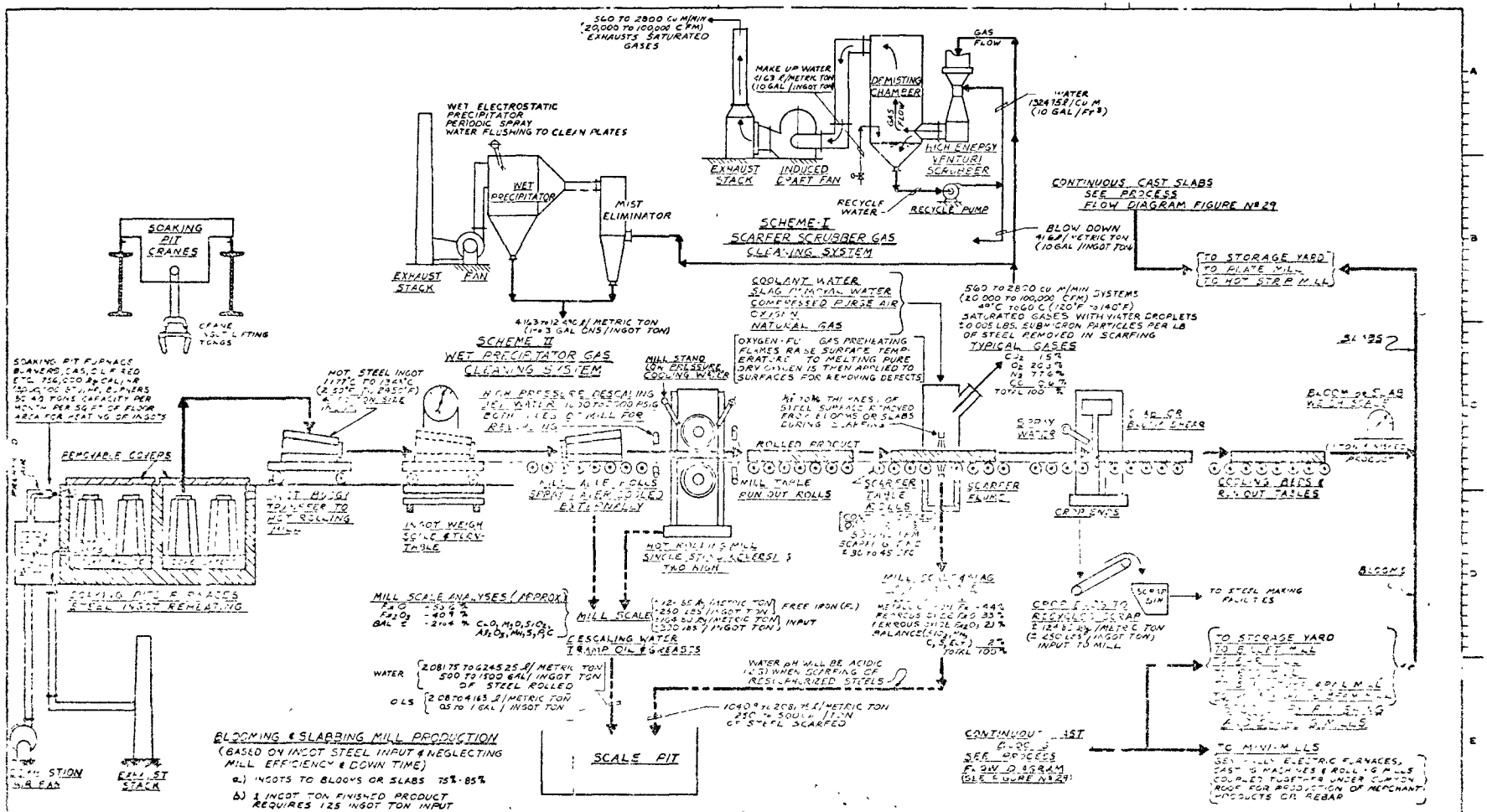

ENVIRONMENTAL PROTECTION AGENCY
STEEL INDUSTRY STUDY
HOT FORMING
TYPE I
PROCESS FLOW DIAGRAM

2-2-74 FIGURE 2

rolled enters the first stand and travels through the mill, taking but one pass in each stand of rolls and emerging from the last set as a finished product. Descaling water and cooling water are sprayed at the stands and rolls with the discharge going to trenches under the mills.

After the billet mills the product is cut to the desired finish piece length. The cutting is accomplished by stationary shears, movable gang shears, flying shear, flame cutting, or saws. Shears are faster but distort product ends. Flying shears are used on small billets to eliminate long tables and transfers. Saws and flame cutting eliminate distorted ends but are slower and require maintenance and expensive fuels.

After cutting, the billets are stamped for proper identification of heat number so the product may be properly routed. The billets are cooled on cooling beds, or hot beds and then pushed into cradles, from which they can be loaded into cars for shipment or transferred for further processing.

Billets are transferred to the bar mill or merchant mill for processing into finished products. The billets are heated to rolling temperature in a continuous reheat furnace. The billets are fed into one end and moved through the furnace by a billet pusher. A walking beam furnace is sometimes utilized to eliminate the slide marks on the underside of the billets. A billet ejector, normally a pusher bar type, pushes the end billet out of the side of the furnace. A shear cuts the heated billets to size or removes bent ends prior to conveying the billet to the bar mill.

Modern bar mills are normally arranged in a cross-country design or continuous design. Both types have in-line roughing stands but the cross-country mill has side by side intermediate and finishing stands where the continuous mill has all stands in-line. The continuous mill is more efficient for production runs but requires more space and individual motors on each stand. Descaling and cooling water sprays are employed at the mill stands with the discharge going into trenches under the mill to collection systems.

Various products are rolled in the bar mills such as angles, channels, flats, other small sections, rebar, window sash, fence posts, rounds, wire, and flat narrow strip. These various products are conveyed to a cooling bed. After cooling the product is sheared to proper length, marked for

identification, sometimes straightened, bundled or coiled, and weighed for shipment or further processing.

Blooms from the primary mill are further processed into a variety of products. The products are rails and joint bars, structural and other sections, and billets which are further processed to tube rounds, bar and rod, wire, and special products.

Rails

Rails are formed from heated blooms in various mill arrangements, but the formation may be considered as taking place in three steps or stages. The first stage is the roughing where the bloom is reduced in section and elongated. High pressure sprays are used at the discharge of the roughing stands for scale removal. The second, or intermediate stage, proceeds with the forming of the rail and involves a combination of slabber, dummy, former, edger, and leader passes, depending on the mill layout. The third stage is the finishing pass which completes the formation of the desired rail section.

The rails are conveyed from the finishing stand on a runout table to hot saws which cut the product to the normal standard 39 ft rail length. After sawing the rails are stamped, cambered, and weighed before they are advanced to cooling beds. Rails intended for railroad service must be control cooled in containers to prevent the formation of internal thermal ruptures or cracks. After cooling the rails are conveyed to the finishing operations. The finishing consists of inspection, removal of saw burrs, straightening, drilling, grinding of ends, leveling, inspection, classification, and painting. The rails are then ready for storage and shipment.

Rail-Joint Bars

Joint bars are rolled from heated blooms or billets similar to rails. Additional passes are required if the joint bar has a depending flange, or long toe. The finishing operation consists of hot-working and oil-quenching the joint bars. In this operation the product is cold sheared to length and then reheated for hot-working which consists of punching, slotting, straightening, and quenching in an oil tank.

Structural and Other Sections

Structural sections include standard items, such as I-beams, channels, angles, and wide-flange beams, and special sections such as zees, tees, bulb angles, and car-building center sills. Other sections include such miscellaneous shapes as sheet piling, tie plates, cross ties, and those for special purposes.

Blooms are heated in a continuous reheat furnace and then conveyed to the roughing, intermediate, and finishing stands. Passes in actual use range from fifteen roughing and nine intermediate on sections requiring heavy overall work, to two fine roughing, and three intermediate on the sections requiring a minimum of work. In all cases, the intermediate passes are followed by a single finishing pass. In rolling wide-flange beams it is customary to roll a bloom which has, as nearly as possible, the same proportions as the finished beam.

Rolled material from the structural mills is delivered by roller table to the hot saw. This equipment consists of a circular saw with large quantities of cooling water to maintain the cutting edges. Cuts are usually made at the hot saw to remove the crop ends, to part the usable material into lengths that can be handled for further processing, and to provide short test pieces. The shapes are then cooled on a cooling bed. After cooling the shapes are conveyed to the finishing area where they are straightened, cold sheared or cold sawed, and inspected prior to separating and assembled for shipment.

More specific details of sectional type mill operations are shown on Figures 3 and 3a.

Hot Forming - Flat

Plate Mills

The basic operation of a plate mill is the reduction of a heated slab to the weight and dimensional limitations defining plates. This is accomplished by heating the slabs, descaling, rolling to plate, leveling or flattening, cooling, and shearing to desired size.

Slabs are received from the slabbing mill or roller tables or removed from storage by overhead cranes and placed on a charging table at the entry end of reheat furnaces. The slabs are removed through a continuous type reheat furnace by pushing the last piece charged with a pusher at the charging or entry end of the furnace. The reheat furnace heats the slabs to rolling temperature up to approximately

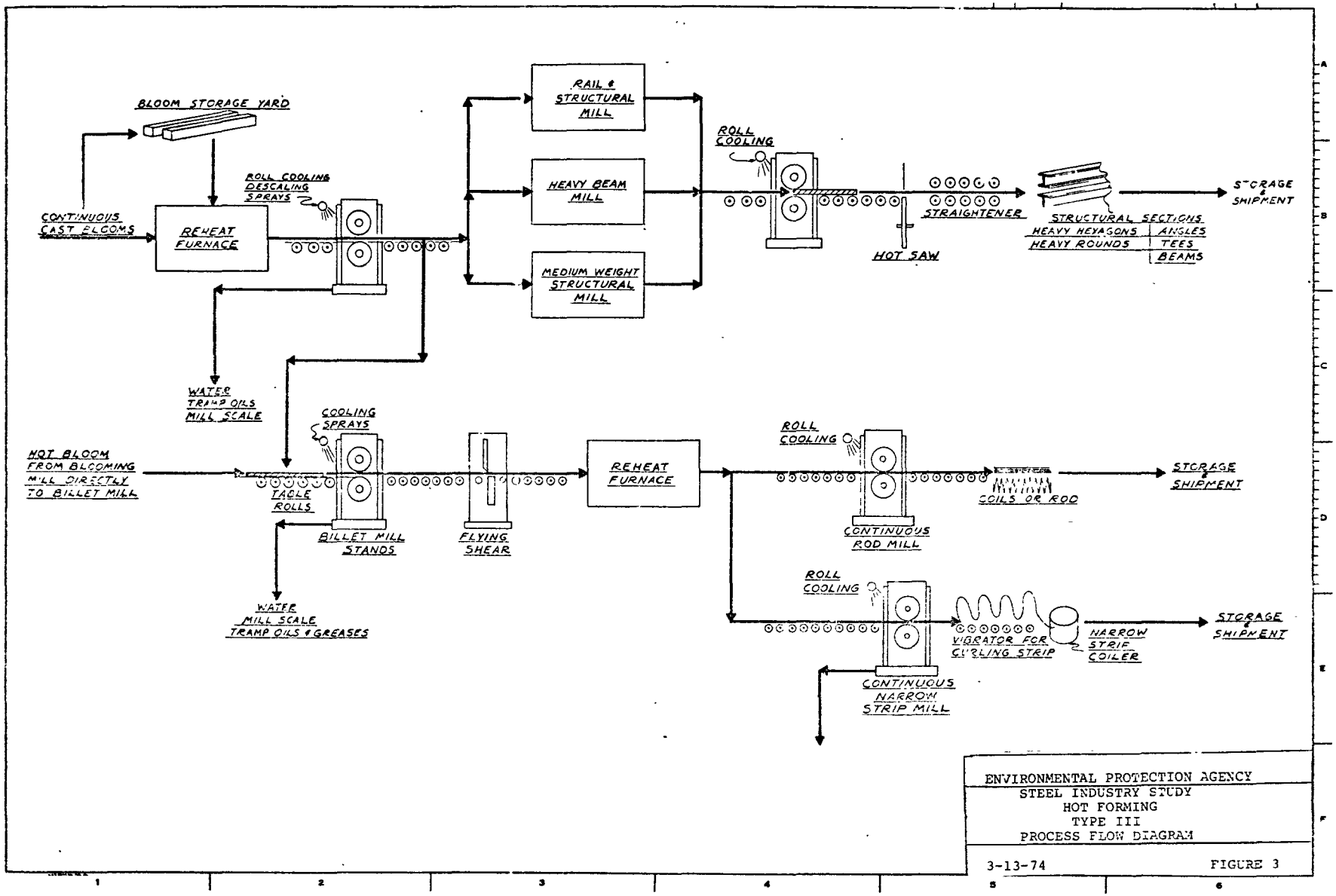

ENVIRONMENTAL PROTECTION AGENCY
STEEL INDUSTRY STUDY
HOT FORMING
TYPE III
PROCESS FLOW DIAGRAM

3-13-74 FIGURE 3

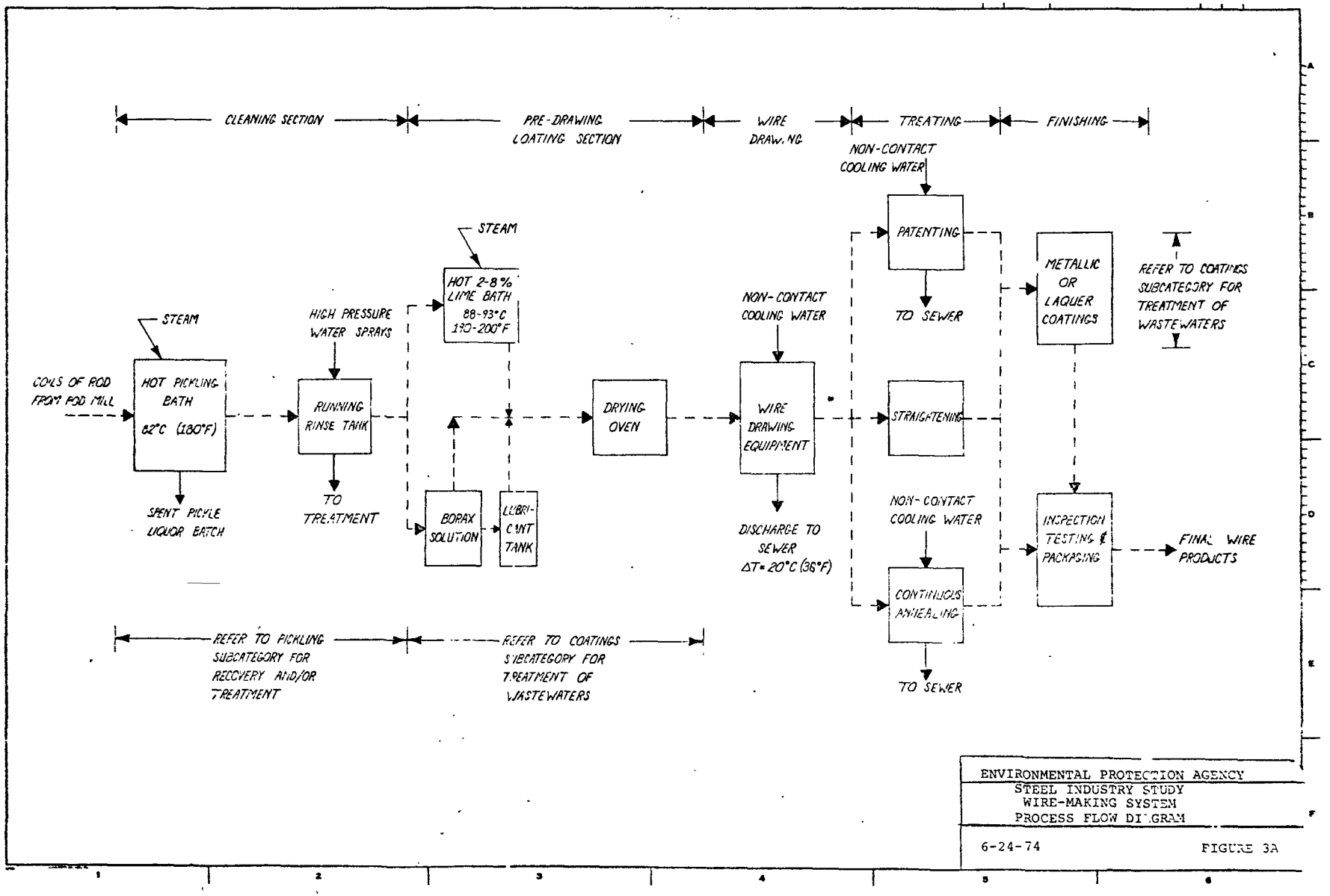
CLEANING SECTION
PRE-DRAWING COATING SECTION
WIRE DRAWING
TREATING
FINISHING
COILS OF ROD FROM ROD MILL
STEAM
HOT PICKLING BATH 82°C (180°F)
SPENT PICKLE LIQUOR BATH
HIGH PRESSURE WATER SPRAYS
RUNNING RINSE TANK
TO TREATMENT
STEAM
HOT 2-8% LIME BATH 88-93°C 190-200°F
BORAX SOLUTION
LUBRICANT TANK
DRYING OVEN
NON-CONTACT COOLING WATER
WIRE DRAWING EQUIPMENT
DISCHARGE TO SEWER ΔT= 20°C (36°F)
NON-CONTACT COOLING WATER
PATENTING
TO SEWER
STRAIGHTENING
NON-CONTACT COOLING WATER
CONTINUOUS ANNEALING
TO SEWER
METALLIC OR LAQUER COATINGS
INSPECTION TESTING & PACKAGING
FINAL WIRE PRODUCTS
REFER TO COATINGS SUBCATEGORY FOR TREATMENT OF WASTEWATERS
REFER TO PICKLING SUBCATEGORY FOR RECOVERY AND/OR TREATMENT
REFER TO COATINGS SUBCATEGORY FOR TREATMENT OF WASTEWATERS
ENVIRONMENTAL PROTECTION AGENCY
STEEL INDUSTRY STUDY
WIRE-MAKING SYSTEM
PROCESS FLOW DIAGRAM
6-24-74
FIGURE 3A

1,230°C (2,250°F). As each cold slab is pushed into the furnace against the continuous line of material, a heated piece is removed. The heated slab is discharged from the furnace by gravity upon a roller table which feeds the mill.

Heated slabs are conveyed on a roller table to a scale-breaker stand. As the slab exits from the scale-breaker, primary descaling is completed on the delivery side of the mill as the slab is passed through top and bottom high pressure hydraulic sprays operating at 1,000 psi to 1,500 psi. The scale-breaker and sprays flush away iron oxide scale that forms on the surface of the hot slabs. Generally, about 4% of the spray water evaporates and the balance is discharged through a trench under the mills to an iron oxide and water collection system. Iron oxide scale generation may amount to 8-10% of the throughput steel production. During the rolling operations, cooling water is sprayed externally over the table and mill stand rolls. Additional lubrication of mill stand rolls is provided at intervals by shots of water-soluble oil.

The descaled slabs are conveyed on roller tables to the plate mill. There are various types of plate mills such as three-high mills, four-high reversing mills, tandem mills, semi-continuous and continuous mills. In each of the various plate mills the heated slab is reduced to the desired plate size. Cooling water, spray water, and water-soluble oil is sprayed externally over the mill stand rolls. Hydraulic sprays on both sides of the mill stands, operating at high pressure, are utilized for top and bottom secondary scale removal.

The plates are conveyed on a runout table to a leveler. A portion of the runout table is equipped with a series of cooling sprays. After leveling, the plates are cooled uniformly to avoid localized stresses which would set up permanent distortions. After cooling, the plates are conveyed to end and side shears to be cut to proper size and then into a shipping or storage building.

More specific details of a plate mill operation are presented on Figure 4.

Hot Strip Mills

The basic operation of a hot strip mill is the reduction of slabs to flat strip steel in thicknesses of 0.04 in. to 1.25 in., widths of 24 in. to 96 in., and lengths up to 2,000 ft. A modern wide hot strip mill will heat slabs in two or more continuous reheating furnaces and convey the heated slabs to

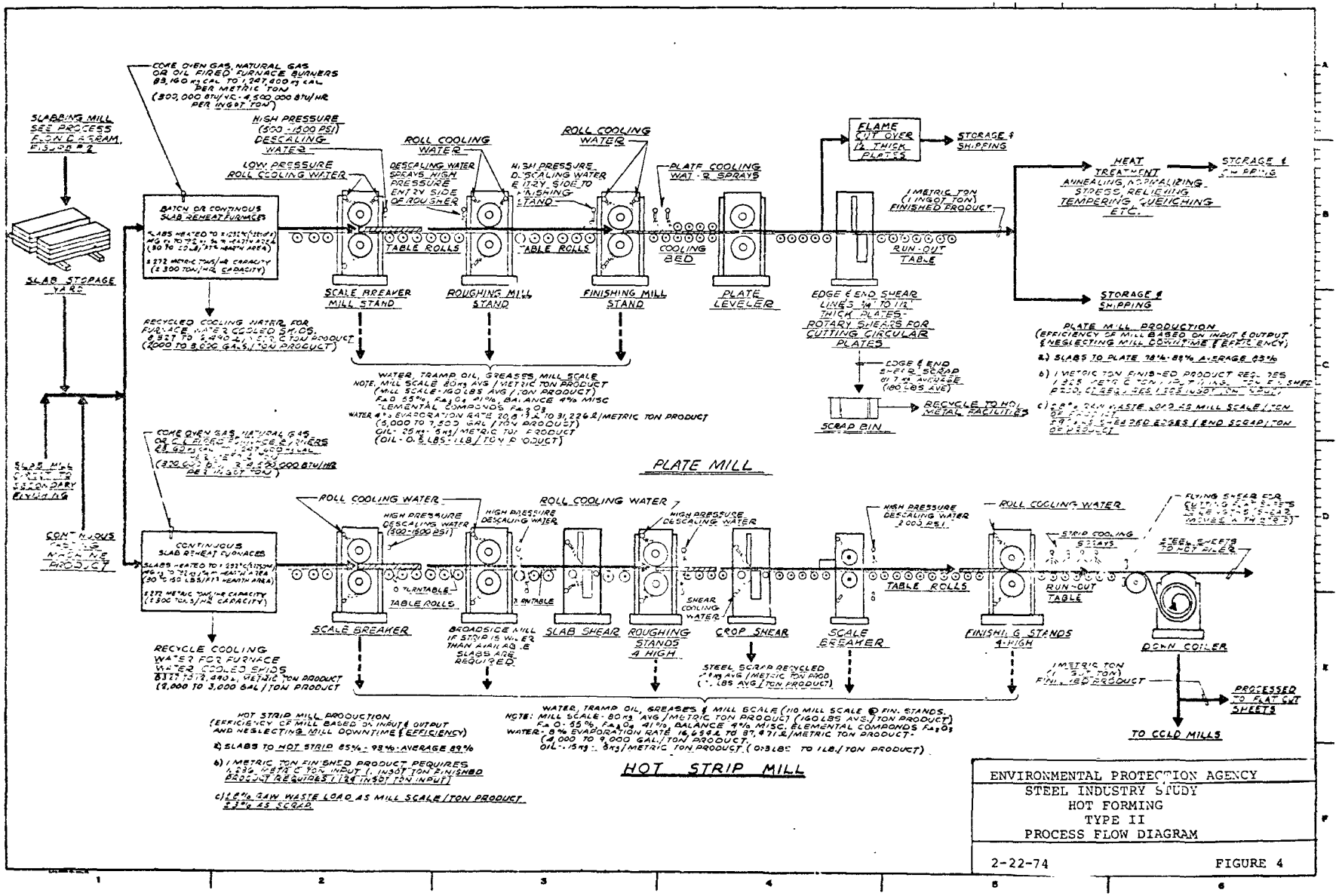
SLABBING MILL SEE PROCESS FLOW DIAGRAM, FIGURE #2
SLAB STORAGE YARD
COKE OVEN GAS, NATURAL GAS OR OIL FIRED FURNACE BURNERS 83,160 m cal TO 1,247,400 m cal PER METRIC TON (300,000 BTU/HR - 4,500,000 BTU/HR PER INGOT TON)
BATCH OR CONTINOUS SLAB REHEAT FURNACES
SLABS HEATED TO 1,093°C (2000°F) AVG TO 1,371°C (2500°F) MAX (80 TO 120 LB/FT² HEARTH AREA)
272 METRIC TONS/HR CAPACITY (300 TON/HR CAPACITY)
HIGH PRESSURE DESCALING WATER (900 - 1800 PSI)
LOW PRESSURE ROLL COOLING WATER
ROLL COOLING WATER
DESCALING WATER SPRAYS HIGH PRESSURE ENTRY SIDE OF ROUGHER
HIGH PRESSURE DESCALING WATER EXIT SIDE TO FINISHING STAND
ROLL COOLING WATER
PLATE COOLING WATER SPRAYS
SCALE BREAKER MILL STAND
ROUGHING MILL STAND
FINISHING MILL STAND
TABLE ROLLS
TABLE ROLLS
COOLING BED
PLATE LEVELER
FLAME CUT OVER 1/4" THICK PLATES
STORAGE & SHIPPING
EDGE & END SHEAR LINES 3/4" TO 1 1/2" THICK PLATES - ROTARY SHEARS FOR CUTTING CIRCULAR PLATES
1 METRIC TON (1 INGOT TON) FINISHED PRODUCT
RUN-OUT TABLE
HEAT TREATMENT ANNEALING NORMALIZING STRESS RELIEVING TEMPERING QUENCHING ETC.
STORAGE & SHIPPING
RECYCLED COOLING WATER FOR FURNACE WATER COOLED SKIDS 4,927 TO 5,424 LITERS/TON PRODUCT (2000 TO 2,200 GAL/TON PRODUCT)
WATER, TRAMP OIL, GREASES, MILL SCALE
NOTE: MILL SCALE 80 m/m AVG/METRIC TON PRODUCT (MILL SCALE - 160 LBS AVG/TON PRODUCT)
FeO 55%, Fe2O3 41%, BALANCE 4% MISC. ELEMENTAL COMPOUNDS Fe3O4
WATER 4% EVAPORATION RATE 10,848 TO 31,226 L/METRIC TON PRODUCT (3,000 TO 7,500 GAL/TON PRODUCT)
OIL - 25 m/m - 5 m/m/METRIC TON PRODUCT (OIL - 0.5 LBS - 1 LB/TON PRODUCT)
EDGE & END SCRAP 6% TO 7 1/2% AVERAGE (180 LBS AVG)
SCRAP BIN
RECYCLE TO HOT METAL FACILITIES
PLATE MILL PRODUCTION (EFFICIENCY OF MILL BASED ON INPUT & OUTPUT & NEGLECTING MILL DOWNTIME EFFICIENCY)
a) SLABS TO PLATE 78% - 88% AVERAGE 85%
b) 1 METRIC TON FINISHED PRODUCT REQUIRES 1.538 METRIC TON INPUT (1.1 INGOT TON INPUT)
c) 6.6% RAW WASTE LOAD AS MILL SCALE/TON OF PRODUCT 3% AS SCRAP OR RECYCLED EDGES & END SCRAP/TON OF PRODUCT
PLATE MILL
SLAB STORAGE YARD
CONTINUOUS CASTING MACHINE PRODUCT
SLABS MAY BE CHARGED DIRECTLY FROM SECONDARY FLYING
COKE OVEN GAS, NATURAL GAS OR OIL FIRED FURNACE BURNERS 83,160 m cal TO 1,247,400 m cal PER METRIC TON (300,000 BTU/HR - 4,500,000 BTU/HR PER INGOT TON)
CONTINUOUS SLAB REHEAT FURNACES
SLABS HEATED TO 1,093°C (2000°F) MAX TO 1,371°C (2500°F) MAX (80 TO 120 LBS/FT² HEARTH AREA)
272 METRIC TONS/HR CAPACITY (300 TONS/HR CAPACITY)
ROLL COOLING WATER
HIGH PRESSURE DESCALING WATER (900-1800 PSI)
ROLL COOLING WATER
HIGH PRESSURE DESCALING WATER
HIGH PRESSURE DESCALING WATER 2,000 PSI
ROLL COOLING WATER
STRIP COOLING SPRAYS
FLYING SHEAR FOR CUTTING PLATES TO LENGTH SHEARS MOVES WITH STRIP
STEEL SHEETS TO HOT PILER
RECYCLE COOLING WATER FOR FURNACE WATER COOLED SKIDS 8127 TO 12,492 L/METRIC TON PRODUCT (2,000 TO 3,000 GAL/TON PRODUCT)
SCALE BREAKER
TURNTABLE
TABLE ROLLS
BROADSIDE MILL IF STRIP IS WIDER THAN AVAILABLE SLABS ARE REQUIRED
TURNTABLE
SLAB SHEAR
ROUGHING STANDS 4 HIGH
SHEAR COOLING WATER
CROP SHEAR
STEEL SCRAP RECYCLED 7 m/m AVG/METRIC TON PROD (7 LBS AVG/TON PRODUCT)
SCALE BREAKER
TABLE ROLLS
FINISHING STANDS 4-HIGH
RUN-OUT TABLE
DOWN COILER
1 METRIC TON (1 SHORT TON) FINISHED PRODUCT
PROCESSED TO FLAT CUT SHEETS
TO COLD MILLS
HOT STRIP MILL PRODUCTION (EFFICIENCY OF MILL BASED ON INPUT & OUTPUT AND NEGLECTING MILL DOWNTIME EFFICIENCY)
a) SLABS TO HOT STRIP 85% - 98% AVERAGE 89%
b) 1 METRIC TON FINISHED PRODUCT REQUIRES 1.230 METRIC TON INPUT (1.1 INGOT TON FINISHED PRODUCT REQUIRES 1.124 INGOT TON INPUT)
c) 1.6% RAW WASTE LOAD AS MILL SCALE/TON PRODUCT 2.3% AS SCRAP
WATER, TRAMP OIL, GREASES & MILL SCALE (NO MILL SCALE @ FIN. STANDS)
NOTE: MILL SCALE - 80 m/m AVG/METRIC TON PRODUCT (160 LBS AVG/TON PRODUCT)
FeO - 55%, Fe2O3 41%, BALANCE 4% MISC. ELEMENTAL COMPOUNDS Fe3O4
WATER - 8% EVAPORATION RATE 16,695 L TO 37,471 L/METRIC TON PRODUCT (4,000 TO 9,000 GAL/TON PRODUCT)
OIL - 1.5 m/m - 3 m/m/METRIC TON PRODUCT (0.3 LBS TO 1 LB/TON PRODUCT)
HOT STRIP MILL
ENVIRONMENTAL PROTECTION AGENCY
STEEL INDUSTRY STUDY
HOT FORMING
TYPE II
PROCESS FLOW DIAGRAM
2-22-74
FIGURE 4

a rolling train. A typical rolling train will consist of a roughing scale-breaker, and six four-high finishing stands.

Slabs are received from the slabbing mill on roller tables or removed from storage by overhead cranes and placed on a charging table at the entry end of reheat furnaces. The slabs are moved through a continuous type reheat furnace by pushing the last piece charged with a pusher at the charging or entry end of the furnace. The reheat furnace heats the slabs to rolling temperature up to approximately 1,100° to 1,300°C (2,010° to 2,370°F). As each cold slab is pushed into the furnace against the continuous line of material, a heated piece is removed. The heated slab is discharged from the furnace by gravity upon a roller table which feeds the mill.

Heated slabs are conveyed on a roller table to the roughing scale-breaker stand for primary descaling.

Descaling water sprays, operating at approximately 1,300 psi pressure after the stand, remove iron oxide from the slabs. Generally, about 4% of the spray water evaporates and the balance is discharged through a trench under the mills to an iron oxide and water collection system. Iron oxide scale generation may amount to 8-10% of the throughput steel production. During the rolling operations cooling water and water-soluble oil is sprayed externally over the table and mill stand rolls.

The slabs are conveyed from the roughing scale-breaker to the four four-high roughing stands. The first roughing stand is normally a broadside mill used to produce widths greater than the original slab. Slab turnarounds are provided before and after this mill to rotate the slabs 90° when the stand is used for broadsiding. Following the mill, a slab squeezer serves to true up edges and widths. A slab shear is located between the squeezer and the second roughing stand. Sheared waste is fed into a scrap bin for recycling back to the steelmaking facilities as scrap. The second, third, and fourth roughing stands are equipped with vertical edging rolls mounted on the entry side of each mill. After the roughing stands, the rolled product is cooled on a holding table, if necessary, to attain proper finishing temperature to meet requirements. A rotary crop shear is installed at the end of the table, so that both the front and back ends of the material can be squared off before finishing. A second scale-breaker followed by high pressure sprays is utilized to perform secondary scale removal prior to entering the finishing stands.

Material is fed into the finishing train, which consists of six four-high mill stands, and is continuously reduced to strip product. Product speed leaving the last finishing stand reaches approximately 600 meters/minute (1,970 fpm). Loopers are provided between the finishing stands and steam sprays are provided on the delivery side of each stand.

Strip product is conveyed from the finishing stands on a runout table to automatic coolers. Cooling sprays, sometimes referred to as laminar sprays, continuously cool the product on the runout table. Similar to the mill stands and tables, the spray water is discharged through a trench under the mill to a water collection system. The coiled strip product is then conveyed to storage for shipping or further processing.

More specific details of a hot strip mill operation are also presented on Figure 4.

Skelp Mills

Skelp is a hot rolled strip used to make butt-weld pipe or tube. The skelp is rolled with square or slightly beveled edges, the width of which corresponds to the circumference of the pipe, and the gauge to the thickness of the wall. A bloom is heated and rolled to produce skelp of the desired size.

The bloom which is rectangular in shape and of the proper dimensions to produce skelp of the desired size, is heated in a continuous reheat furnace to rolling temperature. The bloom is then conveyed on a roller table to the mill stands.

The first two to four stands in the mill, corresponding to roughing stands in other mills, are used to spellerize the bloom. This means the working surfaces of the stands, called knobbling rolls, are provided with regularly shaped projections and depressions, while the surface of the other passes are plain. When the bloom passes through these rolls, the kneading process to which its surfaces are subjected is said to give a pipe surface that is better adapted to resist corrosion. Descaling water sprays, operating at high pressure after the stands, remove iron oxide scale from the blooms. Generally, about 4% of the spray water evaporates and the balance is discharged through a trench under the mills to an iron oxide and water collection system. Iron oxide scale generation may amount to 8-10% of the throughput steel production. During the rolling operations, cooling water and water-soluble oil is sprayed externally over the table and mill stand rolls.

The bloom, now much reduced in thickness, is edged by a twisting guide in the next group of rolls in order to control the width. Next, the bloom is cut into two or more pieces by a hot shear, to adjust the length of the finished strip to the cooling bed. These pieces then pass flatwise, or flat and edgewise, through the next fine stands to the vertical rolls. The vertical rolls are grooved to roll the edges of the skelp, which must be slightly beveled, so that, when skelp is bent to form the pipe, they will fit squarely together and form a perfect joint.

From the finishing rolls, the skelp passes over the cooling bed to the shears, where the crop ends are cut off, and the remainder of the skelp strip is cut into the lengths desired. The skelp is then passed to the clipper, a machine that performs the double function of a shear and a press. It shears two small triangular-shaped pieces from one end of the skelp to start the curve for welding the pipe, and bends the end of the skelp to facilitate handling with the welding tongs. The skelp is stacked and transported to the butt-welding furnaces.

More specific details of a typical skelp mill operation are shown on Figure 5.

Pipe and Tubes

Steel tubular products have many uses to which they have been applied and this has led to descriptive terms in designating the products used for different purposes. Typical products are standard pipe, conduit pipe, line pipe, pressure pipe, structural pipe, oil-country tubular goods, pressure tubes, mechanical tubes, and stainless steel pipe and tubes. Another classification is based on the methods of manufacture, to which we will refer. On this basis, all steel tubular products may be classified under the two main headings of welded and seamless.

Welded Tubular Products

Welded tubular products are classified as butt-weld, lap-weld, or electric-weld. Butt-weld pipe or tube is made from a hot rolled strip, with square or slightly beveled edges called skelp, the width of which corresponds to the circumference of the pipe, and the gauge to the thickness of the wall. By heating this skelp to the welding temperature and drawing it through a die or roll pass, the skelp is bent into cylindrical shape and its edges pressed firmly together into a buttweld, thus forming a pipe. Lap-weld is similar except the edges are lapped. In the electric-weld process,

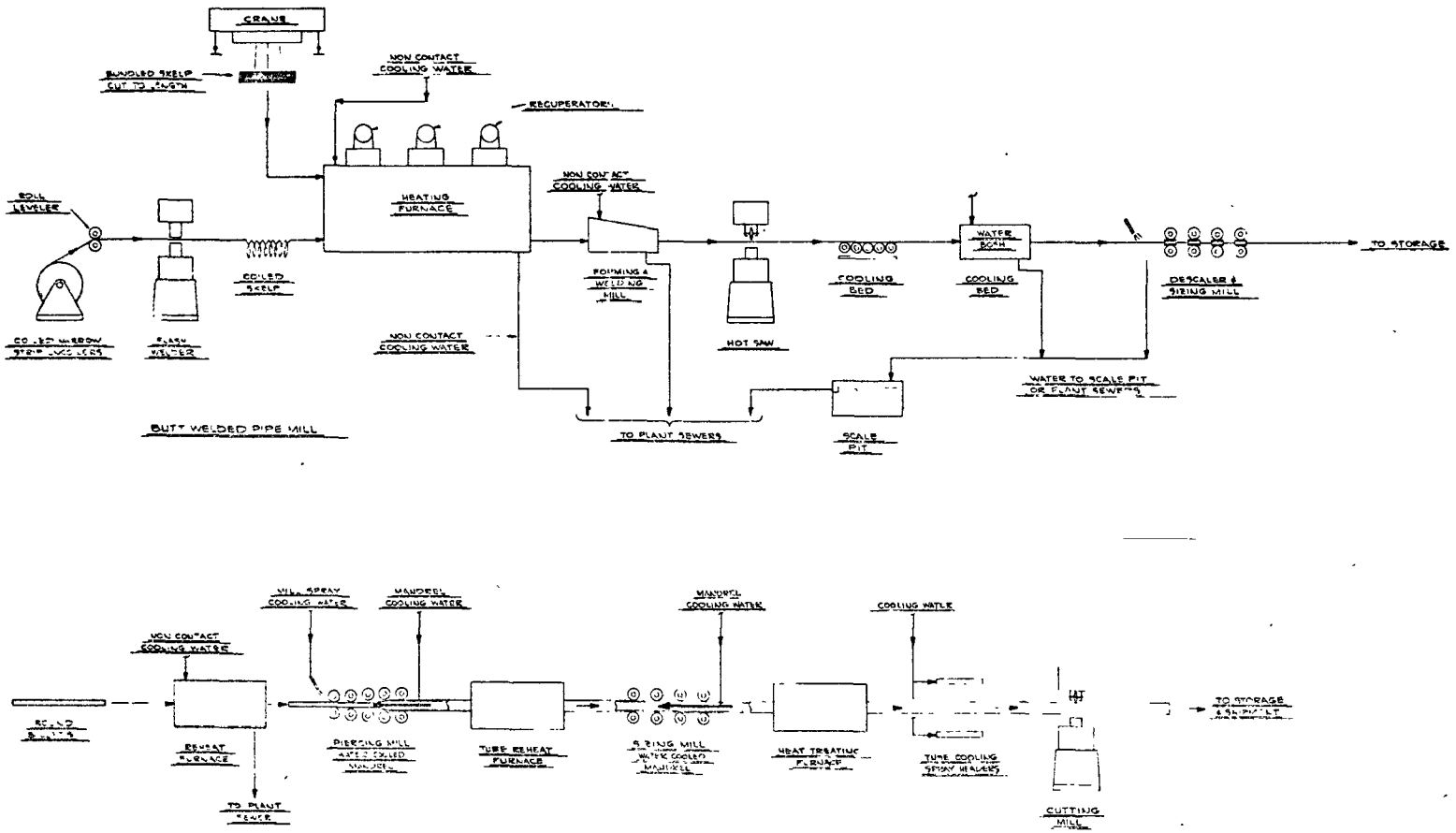

ENVIRONMENTAL PROTECTION AGENCY
STEEL INDUSTRY STUDY BUTT WELD PIPE MILL SEAMLESS TUBE MILL PROCESS FLOW DIAGRAM
6-29-74 FIGURE 5

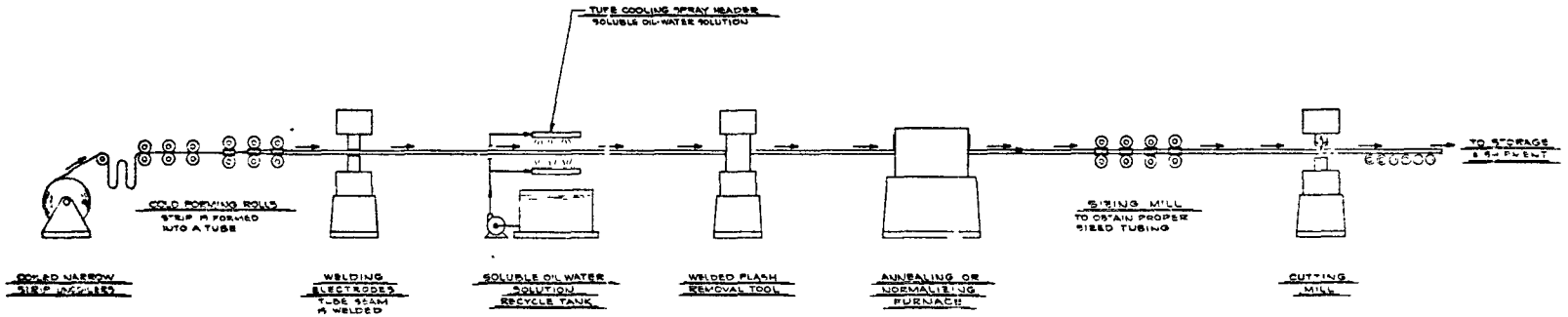

ENVIRONMENTAL PROTECTION AGENCY
STEEL INDUSTRY STUDY
TUBING MILL
ELECTRIC RESISTANCE WELDED
PROCESS FLOW DIAGRAM

6-29-74 FIGURE 5A

hot rolled strip or plate of a gauge corresponding to the thickness of the wall of the pipe desired, but of an overall width slightly greater than its circumference, is first edge-trimmed to insure parallelism and accurate width. For large diameter pipe fusion-welding is used. The plate is bent into cylindrical shape with the beveled edges abutting to form a "V" into which the electrode is melted. For small diameter pipe electric-resistance welding is used, whereby the union of the seam is affected by the application of pressure and heat, the heat being generated by the resistance to current flow across the seam during welding.

Butt-Welded Pipe

The butt-welded process is used in the manufacture of pipe, 1/8 in. to 4 in., nominal diameter. Skelp is conveyed from storage and charged into a reheating furnace, welded in a welding stand, and finished on finishing machines.

The skelp is charged into a continuous reheat furnace. Modern mills used skelp strip in coils to feed a continuous butt-welding mill. The skelp is fed into a threading machine which feeds it through the furnace. Once the leading end is in the forming and welding unit the threading rolls release the skelp. The leading end of the next skelp strip is welded to the trailing arm of the first strip by a flash-type skelp welder, prior to the entry end of the reheat furnace. The skelp strip exits from the furnace into a continuous forming and welding mill. The forming stand rolls force the skelp into an arc of about 270°. Then it goes through a welding horn and into a welding stand, where the edges are pressed firmly together. The last stands of the mill contain reducing rolls which provide for reduction of diameter and resultant change in wall thickness. A rotary flying saw cuts the continuous pipe into lengths. The cut lengths are reduced to the required hot size on a sizing mill. The hot pipe is delivered to a cooling bed and then passes to a water bosh tank for fast cooling. Conveyors feed the pipe to straighteners in the finishing bay.

Seamless Tubular Products

Seamless tubular products are made by two processes; piercing and cupping. In the piercing process, a solid round bar or billet is heated, pierced and afterwards shaped to the desired diameter and thickness of wall. This process is used today for most of the seamless pipe products. The cupping process is used primarily for the manufacture of special tubes and gas cylinders. A circular sheet or plate

is forced by successive operations through several pairs of conical dies until the plate takes the form of a tube, or cylinder with one end closed.

Seamless Pipe Mills

The production of seamless pipe and the mills required in the operation will vary depending on the diameter of the pipe product. The steps required to produce pipe up to 4 in. diameter consist of heating a solid billet, piercing, plug rolling, reeling, reheating and reducing or sizing. Pipe up to 16 in. diameter is similar except a second piercing and reheating operation is required. Pipe up to 26 in. diameter is similar to the preceding 16 in. operation except for the addition of a rotary rolling mill and a third reheating operation.

A solid bar or billet of the proper length and diameter to make the size and weight of tube desired is heated to rolling temperature of approximately 1,230°C (2,250°F). The heated billet is transferred in a horizontal trough to the piercing mill. The piercing mill consists of two contoured horizontal rolls and a piercing mandrel. The roll surfaces are contoured so that, in the horizontal plane through the centerline of the pass, the space between the rolls converges toward the delivery side and then diverges to form the pass outlet. The elevation of the centerline of the pass is determined by guides mounted above and below the center of the mill in the space between the rolls. Between these guides in the pass outlet a projectile shaped piercing mandrel is held in position on the end of a water-cooled mandrel support bar, located on the delivery side of the mill. As the billet, which is in a plastic state, enters the mill, the rolls grab it at opposite points on its circumference. As the billet is drawn and compressed the spreading of the metal sets up a lateral tension that may cause its particles to be drawn away from the center. The nose of the mandrel is at a point preceding the forming of the cavity to insure a smooth inner surface. The pierced billet is drawn out by the rolls and in passing over the mandrel produces the hollow shell. The initial piercing produces a hollow tube with a comparatively heavy wall. The second piercing mill further reduces the wall thickness and increases the diameter and length of the piece required in producing large diameter product.

In the plug mill, a plug on a support bar is rammed into the end of the shell. The shell is drawn over the plug by revolving rolls, slightly reducing the wall thickness and increasing the diameter and length. The rotary rolling mill

is used for large diameter pipe. Conical rolls grip and spin the pipe, feeding it forward over a large tapered mandrel, thereby affecting a decrease in the wall thickness of the pipe and an increase in the diameter. The length of the tube is substantially unchanged by this operation.

The reeling machine consists of rolls and a mandrel similar to the piercing mill. A slight reduction in the thickness of the wall is affected during the reeling operation. This slight reduction has the effect of burnishing the inside and outside surfaces of the tube and slightly increasing its diameter. After reeling the tube is reheated and conveyed to the sizing mill. The sizing mill consists of a series of stands of sizing rolls, the grooves of which are slightly smaller than the reeled tube. The diameter reduction affected is to insure uniform size and roundness throughout the length of the tube. After sizing the product is straightened, end cropped, inspected, and finished as required for its eventual use.

Electric-Resistance-Welded Tubing

Electric-resistance-welded tubing is referred to as ERW tubing. Strip sheet or plate in coil form is used as a starting material for ERW tubing. The steps used in the manufacture of ERW tubing are: forming, welding, sizing, cutting, and finishing.

Tubing is produced from single width strip, the width of which will equal the perimeter of the tubing to be welded. If extra wide strip is used it is passed through a slitting-line for cutting to proper width and then recoiled. The proper width strip is fed into forming rolls. The forming rolls consist of an edge trimmer to smooth and clean the edge of the strip for good welding and forming, closing and fin pass rolls. After the fin rolls the strip is in perfect guidance to enter the welding section to provide the precise circumference of the required tube. In the welding section of the mill the tube is held in squeeze rolls at the correct pressure to provide the desired weld as the edges are heated at this point to welding temperature. The heat for welding is provided by low-frequency power through electrode wheels or radio-frequency power through sliding contacts or coil induction. Typical power for welding is supplied at 450,000 cycles per second. The welded tube then passes under a cutting tool which removes the flash resulting from the pressure during welding. The welded seam or entire tube is then annealed or normalized depending on the required metallurgy. After cooling the tube is sized on horizontal and vertical sizing rolls to obtain a round finished product

of the desired diameter. After sizing the tube is cut to length, straightened, and end finished if required. The tubes are inspected and packed for shipment.

Electric-Welded Pipe

The electric-weld process or fusion weld is used to produce pipe in unlimited diameters. If the circumference exceeds the plate width, two or more plates may be welded together to provide the necessary width. The steps required to make plates into pipe by the electric-weld process are shearing, planing, crimping, bending, welding, expanding, and finishing.

Plate is transferred to the edge-planing machine where it is aligned so that the two edges will be parallel and square with the ends after planing. Forming plate into circular pipe is usually performed in three operations called crimping, "U"-ing, and "O"-ing. The first operation, crimping, consists of bending the edges in a press so as to avoid a flat surface near the longitudinal seam of the pipe. The crimped plate is then conveyed to a "U"-ing machine. In this operation the plate is centered over a series of parallel rocker-type dies which lie along the axis of the plate. A large "U"shaped die operated by a press, as long as the longest length of plate, is moved down on the plate, forcing it between the dies which automatically conform themselves to the operation and assist in forming the plate into the "U" shape. The plate is then transferred to what is called the "O"-ing machine. The machine consists of two semicircular dies which are as long as the plate. Rollers mounted on vertical spindles prevent the plate from falling and keep it in correct alignment as it enters the "O"-ing machine. The "U"-shaped plate rests in the bottom die, and the top die is forced down by a press, deforming the plate until it is the shape of an almost closed circle which is then ready for welding. The pipe is held in position for welding by a longitudinal rod which maintains the proper gap for welding. A specially designed welding head deposits flux along the joint, feeds metal electrode, and transmits welding current to the joint and electrode. Molten filler metal is deposited from the metal electrode to the work and replaces the fluid flux and forms the weld. After the pipe is welded on the outside it is welded on the inside by an automatic welding machine mounted on the end of a long cantilever arm and the pipe is drawn over this arm by a carriage. After welding the scaly deposit left from the flux is removed by a cantilevered tube device.

The final pipe diameter is obtained by either hydraulically expanding the shell against a retaining jacket or mechanically expanding it over an inside mandrel. In hydraulic expansion, the ends are expanded to proper diameter by mandrels. Retainer rings encircle the body of the pipe which is filled with water and hydraulically expanded to the limits of the bands. This also serves as a hydraulic test. The expansion by either method sizes, rounds, and straightens the pipe and provides a good test of the weld. Attention is given to non-destructive inspection of the weld quality, by x-ray examination of the weld. The pipe is then placed in special machines which face the ends to ensure they are smooth and at right angles. If the joints are to be welded, the ends are beveled in this operation prior to shipment.

More specific details of typical pipe mill operations are also presented on Figures 5 and 5a.

Scale Removal

Heat is used in the production and finishing of steel. Exposure to the atmosphere causes oxide scale to form on the surface of the hot steel. This scale must be removed prior to further processing. This operation can be done in one of the following ways:

1. Acid Pickling
2. Mechanical Action

Acid Pickling

The traditional method of scale removal is called "pickling". Pickling is the chemical removal of surface oxides (scale) from metal by immersion in a heated solution. Carbon steel pickling is almost universally accomplished by using either hydrochloric acid or sulfuric acid. The acid conditions vary with the type material to be pickled. In addition the bath temperature, use of inhibitors, and source of agitation are also varied dependent on material to be pickled. Pickling is accomplished by either one or two general processes dependent upon the type material to be pickled.

A. Continuous Strip Pickling

Continuous strip pickling lines use principally horizontal pickling tanks. (However, in a few cases, vertical spray tanks are being employed.)

The fresh acid solution is added to the last tank section and cascades through the tanks to an overflow located in the first section. Acid solution flow is opposite the direction of the strip travel. More specific details of the process are shown on Figures 6 and 6a.

B. Batch Type Pickling

Large, open tanks of a wide range of sizes are used for batch type pickling, principally for rod coils, bars, billets, sheet, strip, wire, and tubing. Pickling is also applicable to many types of forgings, castings, structural parts, and other sundry-shaped items. Tanks are generally rubber lined and brick sheathed and hold a large volume of heated acid solution. (Most often sulfuric acid is used.) After a certain iron buildup due to scale removal (pickling), the acid solution is considered spent and dumped as a batch. A typical flow sheet illustrating details of the process are shown on Figure 7.

There are three separate operations involved with the pickling operation. They are as follows and directly related to one another:

A. Pickling
B. Rinsing
C. Fume Scrubbing

Pickling

If pickling is to be done efficiently, it must be regarded as what it really is...a chemical process, not merely a method of cleaning, using hot acid. When this concept is accepted, then the conditions necessary for any efficient chemical reaction can be stated and defined. In pickling, those conditions are temperature, agitation, and concentration.

Temperature. Temperature is critical because it dramatically affects the rate of reaction. However, the method of heating is also important. When live steam is injected directly into the acid tank, it dilutes the acid strength by increasing the volume of acid solution since the steam condenses into water. To avoid dilution, internal or external heat exchangers should be employed. These devices transfer heat from steam to pickle liquor but allow the condensate to be discharged externally.

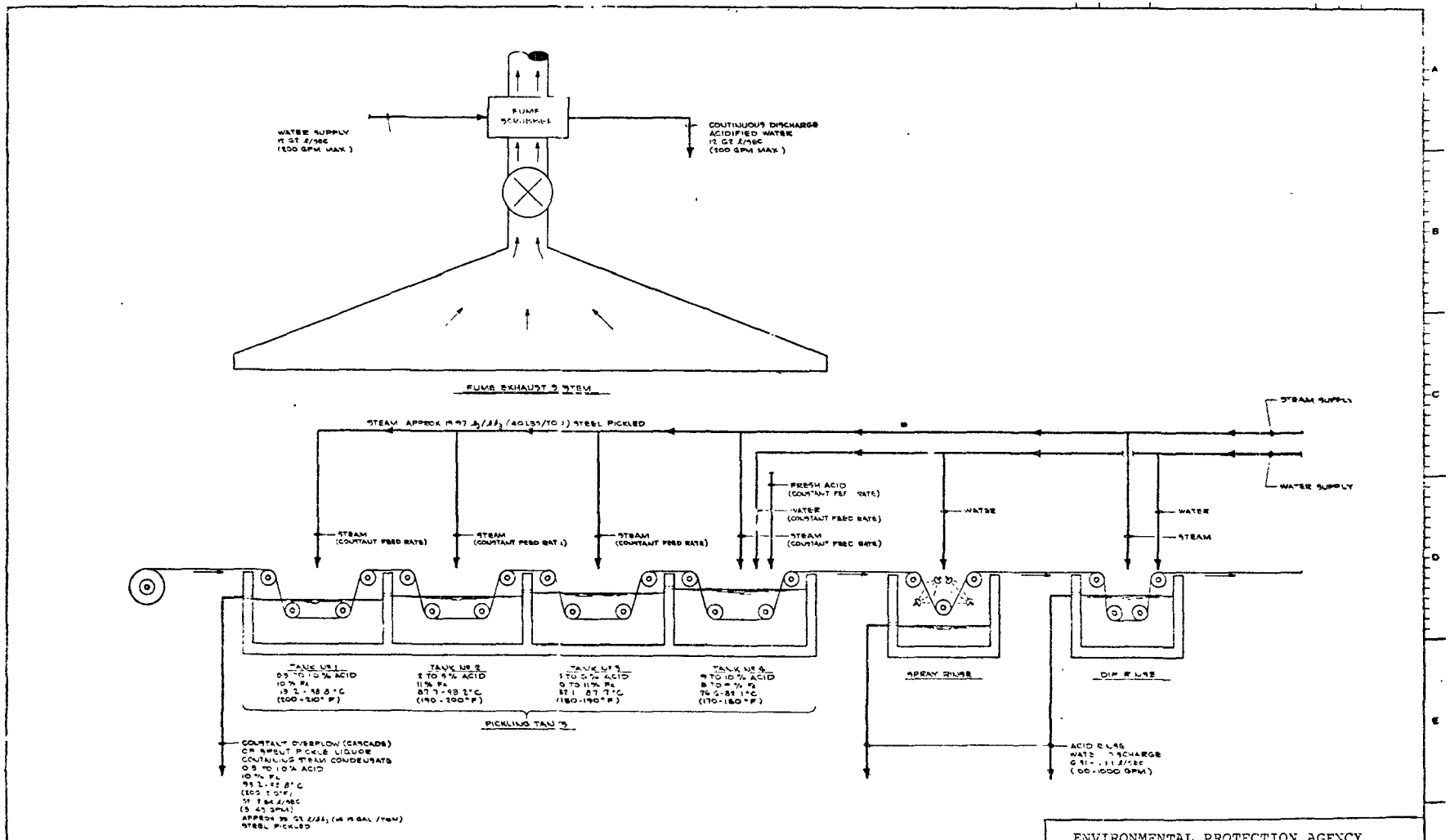

ENVIRONMENTAL PROTECTION AGENCY
STEEL INDUSTRY STUDY
CONTINUOUS STRIP PICKLING
HYDROCHLORIC ACID
PROCESS FLOW DIAGRAM
8-27-73 FIGURE 6

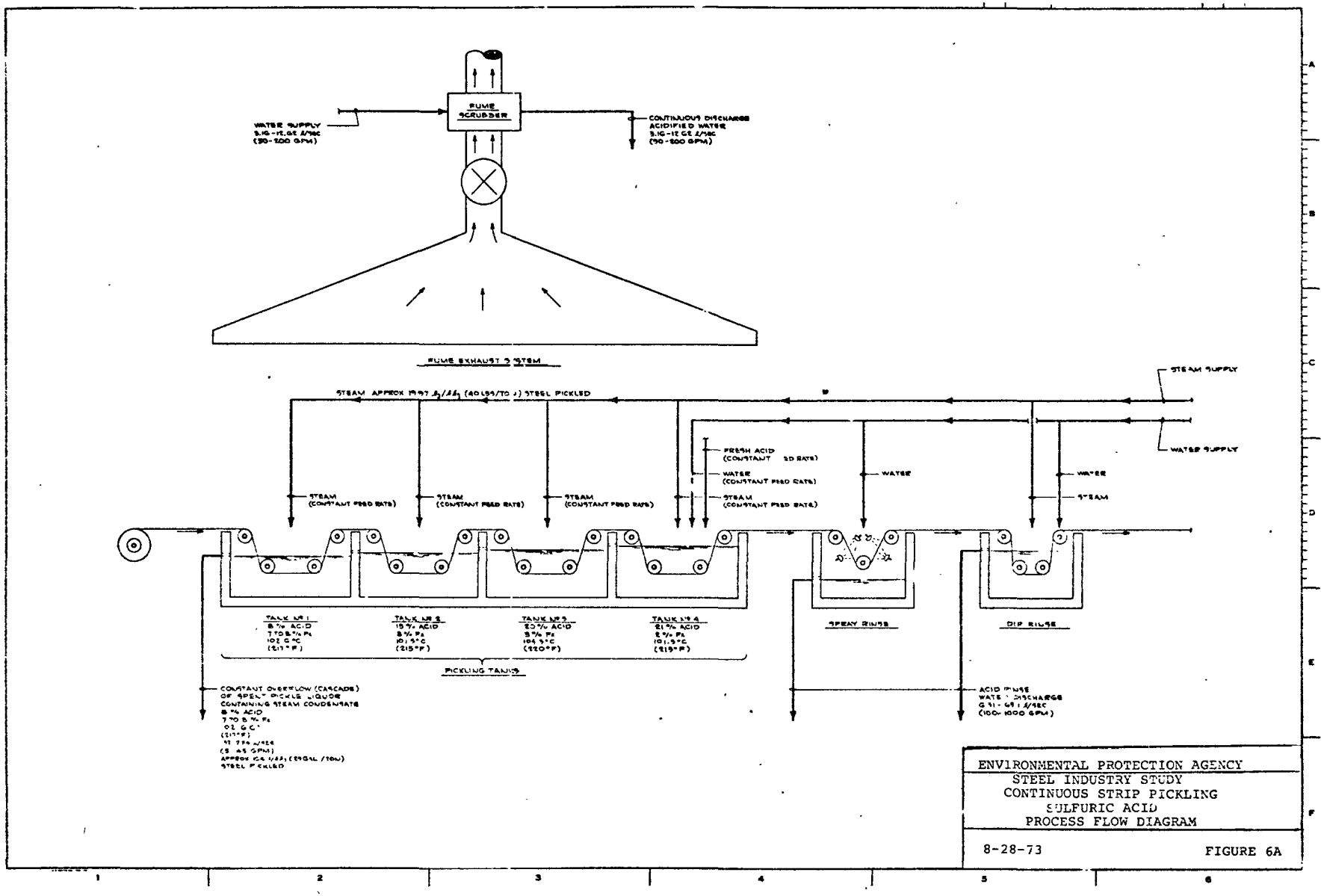

ENVIRONMENTAL PROTECTION AGENCY
STEEL INDUSTRY STUDY
CONTINUOUS STRIP PICKLING
SULFURIC ACID
PROCESS FLOW DIAGRAM

8-28-73 FIGURE 6A

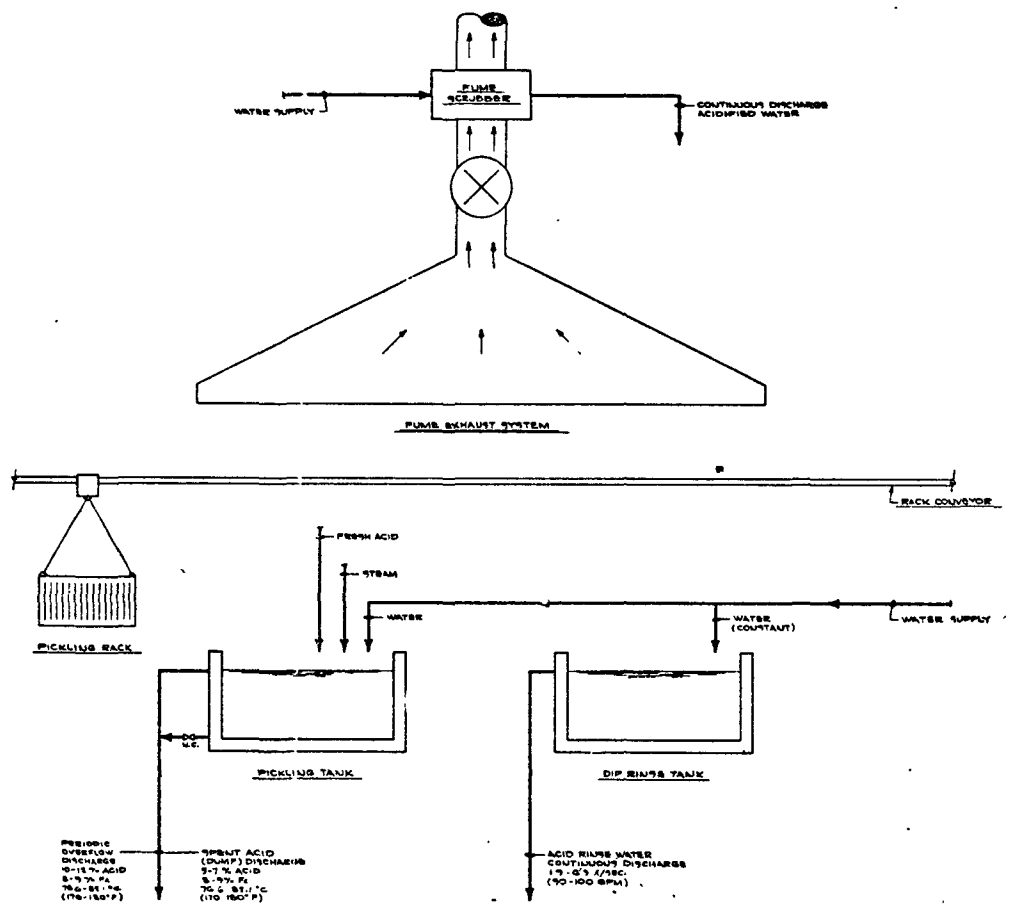

ENVIRONMENTAL PROTECTION AGENCY
STEEL INDUSTRY STUDY
BATCH PICKLING
SULFURIC ACID
PROCESS FLOW DIAGRAM

9-27-73 FIGURE 7

Agitation. Agitation is probably the most ignored aid to good pickling. The speed of pickling can be increased significantly by properly agitating the acid pickle bath.

Sulfuric. A proven answer is an effective, custom-designed, air-operated, agitation system suited to the type and configuration of the steel being pickled. An added benefit is that the evaporation (caused by air agitation) concentrates, rather than dilutes, the acid bath. Induced evaporation requires the addition of more pickling liquids to maintain optimum tank level.

Hydrochloric. In the case of hydrochloric acid pickling (which is usually the case in continuous strip pickling lines), the agitation can be achieved by recirculation of the pickle liquor from the pickling tanks, into external heat exchangers, and back into the pickling tanks. This agitation is supplemented by the movement of the strip itself through the pickling solution.

In either case, however, any additional vapors or acid mists caused by the agitation system need not be a problem because they can be collected in a proper exhaust system and returned to the pickle tank for reuse.

Concentrations of acid and ferrous salts are related directly to the rate of reaction and subsequently to the rate of cleaning. Yet, most pickling plants do not have facilities that would justify maintaining consistent acid strengths. To reduce waste when pickle liquor is dumped, the acid content is allowed to become weaker and weaker, and thus the pickling process takes longer and longer.

On the other hand, use of an acid recycling plant allows the acid to be maintained consistently at its most effective strength without the possibility of waste, because no acid can leave the system.

Rinse

The rinse operation may vary from a one-step dunk to more sophisticated multi-stage rinsing. The primary purpose of the rinse is to remove contaminants prior to moving to the next sequence in the process. The first rinse removes the bulk of the contaminants from the pickled product.

The next rinse section can be of conventional nature, either "dunk" rinse or spray. It removes the remainder of the contaminants from the work. The water from this section is used to replenish the first-stage rinse section.

The last stage of rinsing uses clean, fresh water as the final washing medium to insure a clean product. This final stage water is pumped to the previous stage rinse section.

Again, it may be possible to use the contaminated rinse water as input water to the fume scrubber, prior to its final disposition as pickle recycling system makeup water.

Most continuous strip pickling lines employ the traditional approach to rinsing; flooding the strip with hundreds of gallons of water per minute to wash away the few gallons of acid that are dragged out of the pickling tanks. In the past, this was a practical approach to the problem because it effectively cleaned the strip and diluted the acid content of the rinse water to an extremely low concentration, for it was usually discharged without treatment.

Instead of introducing a high volume flow of water into the rinsing section and releasing it to the drain after one contact with the strip, the multi-stage spray system compartmentalizes the rinse water and reuses it over and over. The net effect is that the amount of water impinging upon the strip is actually greater than the amount in a traditional spray-dunk system.

The dilution rate from one tank section to the next follows a geometric progression, so the number of stages determines how much clean water must be fed into the system to achieve a given degree of cleanliness. For instance, a typical, large, high-speed pickle line with a five-stage system could operate at about 20 gpm.

Disposal of the rinse water at such a low rate of flow (and with the higher acid concentration) becomes a relatively simple matter. It can be further concentrated and piped to the waste pickle liquor acid regeneration system or it may even be used as makeup for the solution in the pickling tanks.

Multi-stage spray rinsing systems can easily be incorporated into new continuous strip pickling lines, and they can be installed in existing lines in place of the present rinsing sections.

Fume Scrubbing

Acid fumes are prevalent in the pickling process and must be removed in order to provide a good working environment. Many existing exhaust systems discharge directly to the atmosphere, causing air pollution. To remove the acid from the exhaust stream, washing or filtration methods may be applied. In scrubbers, the acid droplets are contacted with water, trapped, and then flushed away. This, however, merely trades air pollution for water pollution because the acid has contaminated the scrubber water.

Sulfuric. Acid mist filters use specially designed synthetic fibers in a filter box which is installed in the discharge end of an exhaust system. This unit releases water vapor to the atmosphere while it collects the acid droplets and returns them to the pickle tank. The acid mist filter controls air pollution and simultaneously recovers acid for reuse. No water is used in its operation; therefore, no liquid effluent is discharged.

Hydrochloric. The wet-type scrubber works and, in most cases, works well. Its biggest deterrence, however, is that it usually requires and thereby contaminates large volumes of water (typically, 50 to 200 gallons per minute). The logical solution, therefore, is to (1) minimize the volume of water used; (2) instead of fresh water use contaminated water (such as rinse water); (3) use all of the scrubber water as makeup water in the pickling operation, thereby eliminating the discharge of acidified waters.

Mechanical Action

A second method for removal of unwanted matter from the metal surface can be accomplished through mechanical action. However, pickling and mechanical action are not mutually exclusive and are generally used in combination. The following operations are included under the mechanical action processes:

1. Shot Blast Descaling
2. Shot Blast and Pickling
3. Grinding
4. Abrasive Cleaning
5. Mass Finishing
6. Miscellaneous Methods
    a. Hand Tool Cleaning
    b. Power Tool Cleaning
    c. Flame Cleaning
    d. Sand Blasting

Shot Blast Descaling. Shot blasting or mechanical descaling is done in special cabinets using an airless principle where "shot" is hurled at high velocity upon the work by centrifugal force from the blasting units. There are bladed wheels which rotate at more than 2,000 rpm and throw abradants under directional control without the use of compressed air.

A typical shot blast machine may be installed in a steel strip cleaning line depending on the end product use or can be used in conjunction with an operating pickling line, particularly where extremely tough scale is encountered; for example, hot rolled nickel-alloy steel.

Initial claims for shot blast cleaning were to eliminate "pickling;" however, this has happened in only a very few special cases where embedded scale or "rolled-in" soil or dirt could be tolerated in the end product. "Smut" and surface dirt has required the addition of pickling tanks where a chemically clean surface is required for the strip or product.

A number of large fabricators for the automobile industry are using shot blast cleaning in combination with other finishing type lines.

In practically all cases, we can reasonably conclude that mechanical blast cleaning will not replace pickling as a method for scale removal where the material is to be further cold reduced or must be chemically clean.

Pickling with acid produces a cleaner product at higher production rates and at lower operating costs, especially in high speed, continuous strip pickling lines.

Shot Blast and Pickling. Since the initial use of shot blast cleaning equipment, it was found necessary to add pickling tanks to remove surface dust and hidden scale so that the strip would be chemically clean for further processing.

In a few cases where extremely tough scale is encountered, for example, special grades of hot rolled nickel-alloy steel, the use of shot blast descaling units speed up the pickling operation.

Some users considered mechanical blast cleaning to eliminate the pollution problems associated with the spent pickle liquor developed from pickling. Generally, this goal was not achieved. As a result of this, we find combination

mechanical shot blast cleaning and pickling lines in several plants in the steel and metal working industries.

Grinding. Grinding of bars, billets, and narrow heavy plates has been used successfully to remove oxide scale instead of batch pickling.

Grinding serves a twofold purpose; (1) it removes the scale, and (2) it performs a salvage and machining operation by eliminating surface defects, embedded scale, etc., and producing a flat, smooth surface which aids the subsequent mechanical working.

It is noted that this is a special case, usually applied to products like alloy bars and stainless plates, and is an expensive, time-consuming operation.

Abrasive Cleaning. Abrasive blasting is a process for cleaning and finishing of materials by forceful direction of an abrasive grain, applied either dry or suspended in a liquid medium, against the surface of a workpiece. As a material finishing tool, abrasive blasting is used for (a) removal of mold sand, heat treat scale, rust, paint, carbon deposits, and other dry soils; (b) roughening of surfaces for the application of paint, adhesive for the subsequent bonding of an overlay, or for the application of other protective coating types; (c) removal of surface irregularities to improve surface finish, as exemplified by the elimination of directional grinding lines, burrs, feather edges, and metal fuzz; and (d) improvement of micro-finish, or the development of a mat finish.

Hand Tool Cleaning. This category consists of hand scrapers, chippers, and wire brushes. It is expensive and an acceptable method with obvious limitations. It will not remove all mill scale and rust residues, particularly the tightly adhering scale.

Power Tool Cleaning. This is a more efficient method of using the tools mentioned in hand cleaning but with the application of power. Thus, power tools such as sanders, wire brushes, chipping hammers, grinders, etc., will be included. It is far less expensive than hand cleaning, and the surfaces so prepared with usually have very little remaining mill scale or rust. Excessive power cleaning may produce a burnishing effect which produces a surface to which paint may not adhere, resulting in a detrimental effect on the entire subsequent paint system.

Flame Cleaning. The application of direct flame to the surface causes heavily rusted areas and mill scale to be cleaned off by the action of heat. While mill scale may flake and crack off, heavy rust which has been loosened should be removed with subsequent wire brushing (preferably power). Thin sections of metal subject to warping should not be flame cleaned.

Sand Blasting. This method provides a means of removing rust and mill scale by propelling fine sand or grit by means of compressed air onto the surface to be cleaned. It is a very efficient method of removing rust and mill scale, and provides a surface free from oil, grease, scale, oxides, and other corrosion products.

Cold Rolling

Cold rolling is that operation where unheated metal is passed through a pair of rolls for the purpose of reducing its thickness, of producing a smooth dense surface and of developing controlled mechanical properties in the metal. Any one of a combination may be the reason for cold rolling the material. Cold rolling generally implies a rolling operation in which the thickness of the material is reduced a relatively small amount to produce a superior surface or impart the desired mechanical properties to the rolled material.

Cold reduction is a special form of cold rolling in which the thickness of the starting material is reduced by relatively large amounts in each pass through the rolls. In the production of most cold rolled materials, the cold reduction process is used to reduce the thickness of the hot rolled breakdown between 25% and 90%. After cleaning and annealing, a large percentage of material is subject to a cold rolling operation called tempering. In tempering, the thickness of the material is reduced only a few percent to impart the desired mechanical properties and surface characteristics to the final product.

Cold rolled strip, cold rolled sheet, black plate and cold rolled flat bar are the principal products from cold reduced flat rolling mills. Carbon, alloy or stainless steel are used depending on the end use of the products. The greatest percentage of the products rolled are from carbon steel in sheet form and are used as base material for such coated products as long terne sheets, galvanized sheets, aluminum coated sheets, tin-plate, or tin-free steel. Hot rolled coils called "breakdowns" are the base material used in the cold rolling operation. Prior to rolling, however, they

must be descaled and pickled, usually in a continuous pickling operation.

There are several types of cold reduction mills varying in design from single stand reversing mills to continuous mills with up to six stands in tandem. In the single stand reversing mill, the product is rolled back and forth between the work rolls until the desired thickness and characteristics are reached. In the single stand non-reversing mill the material makes a single pass through the rolls and is recoiled. If additional rolling is required the coil is returned to the head end of the mill and reworked. The single stand non-reversing mill is generally used for tempering operations.

The bulk of the cold reduced flat steel is rolled on continuous three, four, or five stand tandem mills. In these mills the material continually passes from roll to roll, to be further reduced and leaves the final roll at the desired thickness. The continuous rolling mills represent modern technology and would be the type of equipment installed in new mills.

A typical modern cold rolling shop would contain a continuous pickling operation (sulfuric or hydrochloric acid) for the removal of scale and rust from the hot rolled breakdown coil. As it leaves the pickler the strip is oiled to prevent rusting and to act as a lubricant in the cold rolling mill. The coil is then fed into a continuous cold rolling reducing mill that can contain up to six rolling stands in tandem (in series). Each stand contributes to the reduction in thickness of the material; the first contributing the greatest reduction while the last stand acts as a straightening, finishing, and gauging roll. Unlike hot forming, no scale is formed during this operation.

During rolling the steel becomes quite hard and unsuitable for most uses. As a result, the strip must usually undergo an annealing operation to return its ductility and to effect other changes in mechanical properties to render the material suitable for its intended use. This is done in either a batch or continuous annealing operation.

In batch or box annealing a large stationary mass of steel is subject to a long heat treating cycle and allowed to slowly cool. In continuous annealing a single strip of cold reduced product passes through a furnace in a relatively short period of time. The heat treating and cooling cycle in the furnace is determined by the temperature gradient

within the furnace as well as the dimensions and rate of travel of the steel. To prevent oxidation and the formation of scale, inert atmospheres are maintained in these furnaces at all times.

Prior to annealing the material must be cleaned of all dirt and oil from the pickler to prevent surface blemishes. In the case of the continuous annealing furnaces the material is uncoiled and passes through a continuous cleaning operation prior to entering the furnace. On leaving the furnace the material is oiled, recoiled, and is ready to be tempered.

The temper mill is a single stand cold rolling mill whose prime purpose is to produce a slight reduction in thickness of the steel in order to develop the proper stiffness or temper by cold working the steel at a controlled rate. The end use of the material dictates the degree of tempering to be performed.

An oil-water emulsion lubricant is sprayed on the material prior to its entering the rolls of a cold rolling mill and the material is coated with oil prior to recoiling. This oil prevents rust while the material is in transit or in storage and must be removed before the material can be further processed or formed.

More specific details of the cold rolling process are presented on Figure 8.

Coatings

The simplest, yet most useful definition of the term "coating" is the application of a layer of one substance to completely cover another. In the iron and steel industry, coatings are applied for a variety of reasons. Most often, a relatively thin layer of a metallic element such as tin, zinc, chromium or aluminum is applied to carbon steel, giving desirable qualities, such as resistance to corrosion, safety from contamination, or decorative appearance, for a fraction of the cost of product made from the coating metal alone. The finished materials retain the strength of steel, while gaining the high surface quality of the coating. Figure 9 presents a schematic of the material transfer from slab to the various coating processes.

There are many different types of coating materials in addition to metallic elements. These include non-metals, like oxides, sulfides, phosphates, and silicates; simple and complex organic compounds, like synthetic alkyd resins,

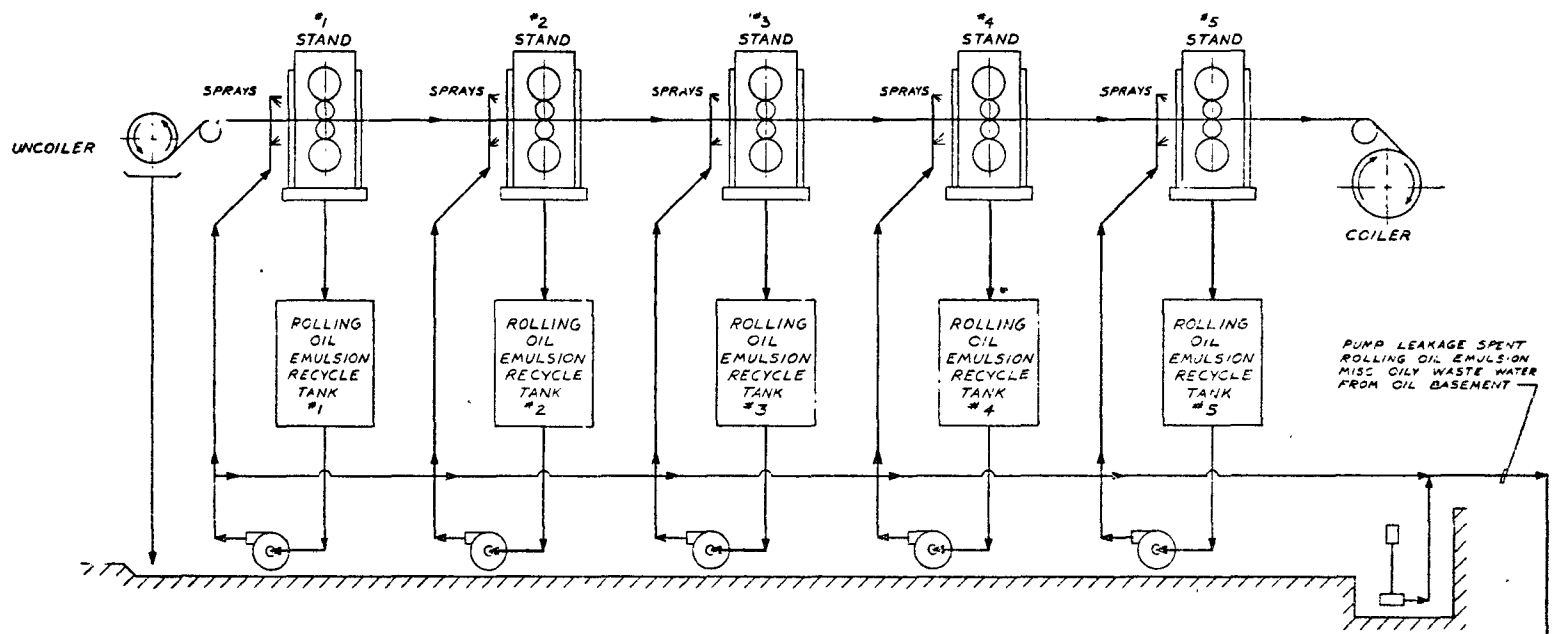

ENVIRONMENTAL PROTECTION AGENCY
STEEL INDUSTRY STUDY
COLD ROLLING MILL
TYPE 1
PROCESS FLOW DIAGRAM

5-11-74

FIGURE 8

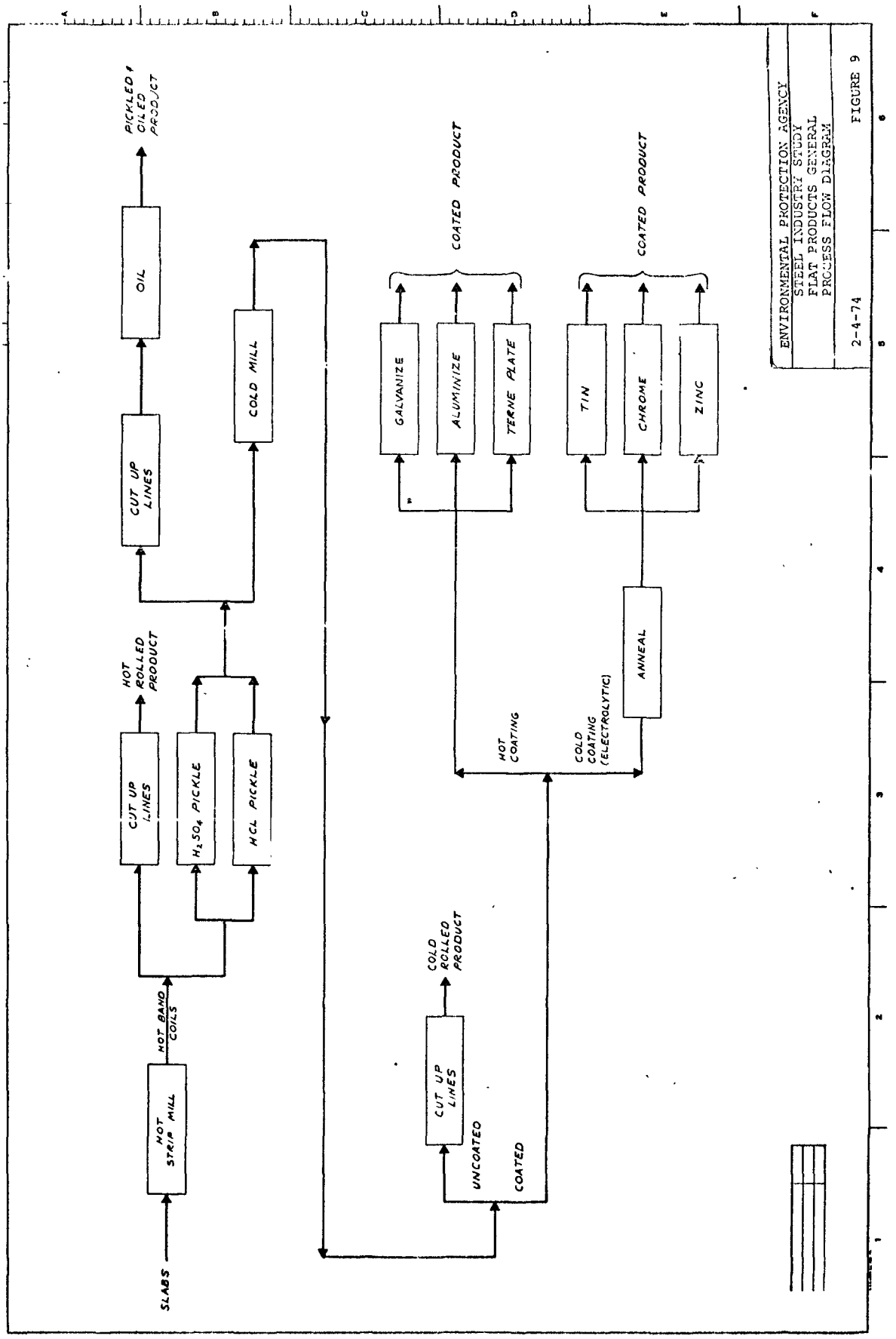
ENVIRONMENTAL PROTECTION AGENCY
STEEL INDUSTRY STUDY
FLAT PRODUCTS GENERAL
PROCESS FLOW DIAGRAM
2-4-74
FIGURE 9
SLABS
HOT STRIP MILL
HOT BAND COILS
CUT UP LINES
UNCOATED
COATED
COLD ROLLED PRODUCT
HOT ROLLED PRODUCT
CUT UP LINES
H_2SO_4 PICKLE
HCL PICKLE
COLD MILL
CUT UP LINES
OIL
PICKLED & OILED PRODUCT
HOT COATING
COLD COATING (ELECTROLYTIC)
ANNEAL
GALVANIZE
ALUMINIZE
TERNE PLATE
COATED PRODUCT
TIN
CHROME
ZINC
COATED PRODUCT

varnishes, and bituminous coatings; and miscellaneous inorganic coatings, like vitreous enamel (a layer of glass fused to a steel base); and metallic powders in silicate paints. But the great bulk of coatings associated with the iron and steel industry are the metallic coatings, so they will be emphasized in the following discussions.

All methods for applying protective coatings to steel surfaces require careful attention to proper surface preparation - the primary and most important step in the coating process. Without such surface preparation, good adhesion of the protective coating is impossible, and without good adhesion, the coating can hardly be considered "protective." The type of surface preparation will vary somewhat with the nature of the coating to be applied, but it always aims at cleanliness and uniformity of surface. Commonly used are alkaline or solvent cleaning for grease removal; acid pickling for removing scale or rust; and physical desurfacing abrasives or brushes.

Following the preparation of suitable surfaces, metallic coatings may be applied to those surfaces by one of the following methods:

Hot Dip Process. The steel is immersed in a molten bath of the coating metal, then removed from the bath in such a way that the coating is uniformly distributed over the metal surface as free of discontinuities as possible. Most zinc coatings, and all aluminum and terne (a lead/tin alloy) coatings are applied in this manner. In the past, tin was also applied as a hot-dipped coating, but the electrolytic tin plate process has almost completely supplanted this practice.

Metal Spraying. The coating metal is drawn into wire, then fed into a specially-built spray gun using compressed air and a gaseous fuel. The wire is melted, and projected against the steel surface being coated. The molten particles cool quickly and adhere to the steel.

Metal Cementation. The coating metal is alloyed into the surface of the base metal at elevated temperature and often in a reducing atmosphere. The coated metal, when cool, may be considered to be a solid solution of that metal in iron.

Fusing Welding. Using an electrical current of sufficient density, the surfaces of the coating metal and the steel base metal are fused together.

Metal Cladding. This process for coating steel is practiced in any of several variations. In one method, the steel core is mounted in a covered mold and heated in an inert atmosphere to a temperature greater than the melting point of the coating metal, which is then carefully cast about it while the core remains in the mold. Cladding is also accomplished by rolling flat steel, then placing it between two sheets of the coating metal, not unlike a simple sandwich. The stack is then cold rolled into one mass using high pressures, or heated and hot rolled together to form a tight bond between the coating metal and the steel core. Another method of metal cladding ideally suited for wire drawing consists of forcing a solid steel rod into a coating metal tube of very slightly larger inside diameter. The action of drawing this pair into wire results in a product with a uniform metal coat around a steel core.

After application of the coating by one of the foregoing methods, the coated product may still be subject to a wide variety of treatment steps. It may be rinsed, dried and oiled to improve handling and protect against oxidation of the coating. It may require additional remelting to insure smooth, even deposition of the metallic coating. Or a chemical treatment may be provided following the coating operation to passivate the coated surface or to provide certain desirable characteristics to enhance subsequent processing steps. For example, galvanized (zinc-coated) strip may be treated with zinc phosphate to produce a surface with excellent paint-adherence properties. More specific discussion of these processes is included in the descriptions of the individual coating operations which follows.

The principal metallic coating operations practiced in the iron and steel industry can be divided into two major classes, hot coating and cold coating. Zinc, terne, and aluminum coatings are most often applied hot, while tin and chromium are most often applied electrolytically from plating solutions maintained between 20-90°C (68-194°F), not actually "cold," but relatively so when compared with molten metal temperatures encountered in the hot dip processes.

Hot Coating

Hot dipped coating using baths of molten metal is practiced in the iron and steel industry as a batch-dip operation for sheet, plate, pipe or other pre-formed products, or on a continuous basis using coiled strip as the base metal source. Mill processes vary, depending on the coating being applied.

Zinc. The batch-dip operation normally follows hot rolling, batch annealing, cold rolling, and pre-forming or cutting to size. Rolling lubricants are removed by alkaline cleaning, and final surface preparation requires acid pickling in stationary tubs provided with slight agitation. Following pickling, residual acid and iron salts are removed either via an alkaline dip; thorough water rinsing; or prolonged immersion in boiling water. The latter practice has the added advantage of minimizing hydrogen embrittlement. Clean base metal forms then are conveyed, by hand or via conveyor belt, through the flux box section of the coating pot, and immersed in the molten metal. Coated products are withdrawn from the bath and subjected to drying with a warm air blast, or chemical treatment with ammonium chloride, sulfur dioxide, chromate or phosphate solutions to produce special galvanized finishes and surface characteristics. A final water rinse may be used, with subsequent drying, after which the product is ready for shipment.

Continuous hot-dip galvanizing, which accounts for about 60% of total galvanizing production, is practiced via several different arrangements of processing steps. The simplest version starts with annealed and tempered strip which receives a light muriatic acid (HCl) pickle and rinse, then proceeds directly through a layer of fluxing agent to the molten zinc bath. The coated strip is dried and recoiled, or cut to size for shipment. More elaborate continuous galvanizing lines utilize additional stages leading up to the hot-dip step. At least one plant incorporates a sequence of pickling in hot sulfuric acid; rinsing and scrubbing with brushes; a hot alkaline dip into a cleaning solution; scrubbing in alkaline solutions; an electrolytic hot alkaline cleaning step; rinsing and scrubbing with brushes; a light pickle in hot sulfuric acid; rinsing and scrubbing with brushes; a dip into a hot zinc sulfate flux bath; the hot dip into molten zinc; dip and spray with chromate or phosphate solutions; a final water rinse; drying with hot air; and recoiling.

Other producers use a so-called "furnace line" to treat their strip prior to coating with zinc. The incoming coils are very hard following the cold reduction step unless a separate annealing step is practiced. Furnace line operators include this step in their continuous galvanizing sequence, as follows. Cold rolled coils are given a hot alkaline cleaning, rinsing, and scrubbing and a light pickling in hot acid followed by water rinses. Strip then enters a controlled atmosphere heating chamber (annealing furnace) up to 60 meters (200 ft) in length with a series of independently controlled heat zones to provide temperatures

required for annealing, yet sufficient cooling so that strip exits the furnace at temperatures slightly above the molten bath temperature. A mixture of NX gas (principally nitrogen, with controlled amounts of methane, carbon monoxide, and carbon dioxide) and cracked ammonia is used in some annealing furnaces to prevent oxidation and decarburization during the treatment process. The exit end of the furnace discharges strip below the surface of the molten zinc bath. A sinker roll submerged near the surface of the molten zinc, is used for controlling the thickness and distribution of the coating. Forced air blasts are used to cool the exiting strip and to help solidify the zinc coating. A dip or spray chromate or phosphate chemical treatment may be provided at this point to retard formation of white corrosion products on the coating. A final rinse and drying step may also follow. Finished coated strip is recoiled or cut to sizes ready for shipment.

Another type of furnace line subjects cold rolled strip to a complex furnace gas containing hydrogen chloride. After annealing and cooling, a light pickling in hydrochloric acid is done immediately prior to entering the flux section of a conventional molten zinc pot. In place of the usual exit rolls for controlling coating thickness, asbestos wipes are used to yield very thin, but extremely adherent zinc coatings.

More specific details of the hot coating operations are shown on Figures 10, 11, and 12.

Terne Metal. Terne (from a French word meaning "dull") is an inexpensive, corrosion-resistant hot-dipped coating consisting of lead and tin in a ratio typically near four to one. Lead alone does not alloy with iron, but does form a solid solution with tin, which in turn alloys readily with iron, although requiring higher temperatures than for tin alone.

A major portion of all terne coated material is used in the auto industry to manufacture gasoline tanks, with lesser amounts going into the production of automotive mufflers, oil pans, air cleaners, and radiator parts. Other end products made of terne metal include roofing materials, portable fire extinguishers, and burial caskets.

As in the case of hot-dipped galvanizing, batch and continuous terne coating operations both exist, although the continuous process is used to produce by far the larger portion of the market. Both metals used in terne coating are very corrosionresistant, as is their combination. But

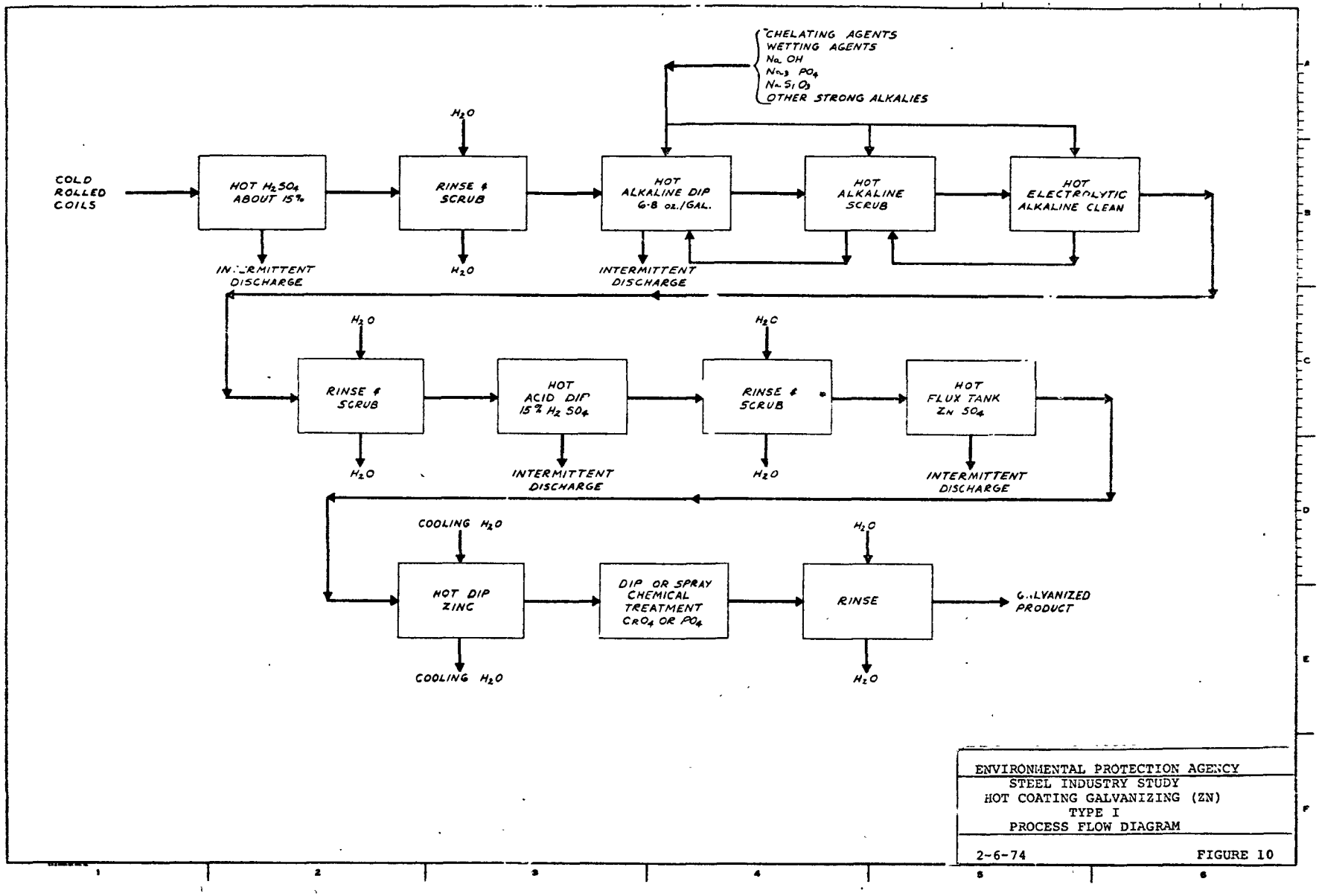

ENVIRONMENTAL PROTECTION AGENCY
STEEL INDUSTRY STUDY
HOT COATING GALVANIZING (ZN)
TYPE I
PROCESS FLOW DIAGRAM

2-6-74 FIGURE 10

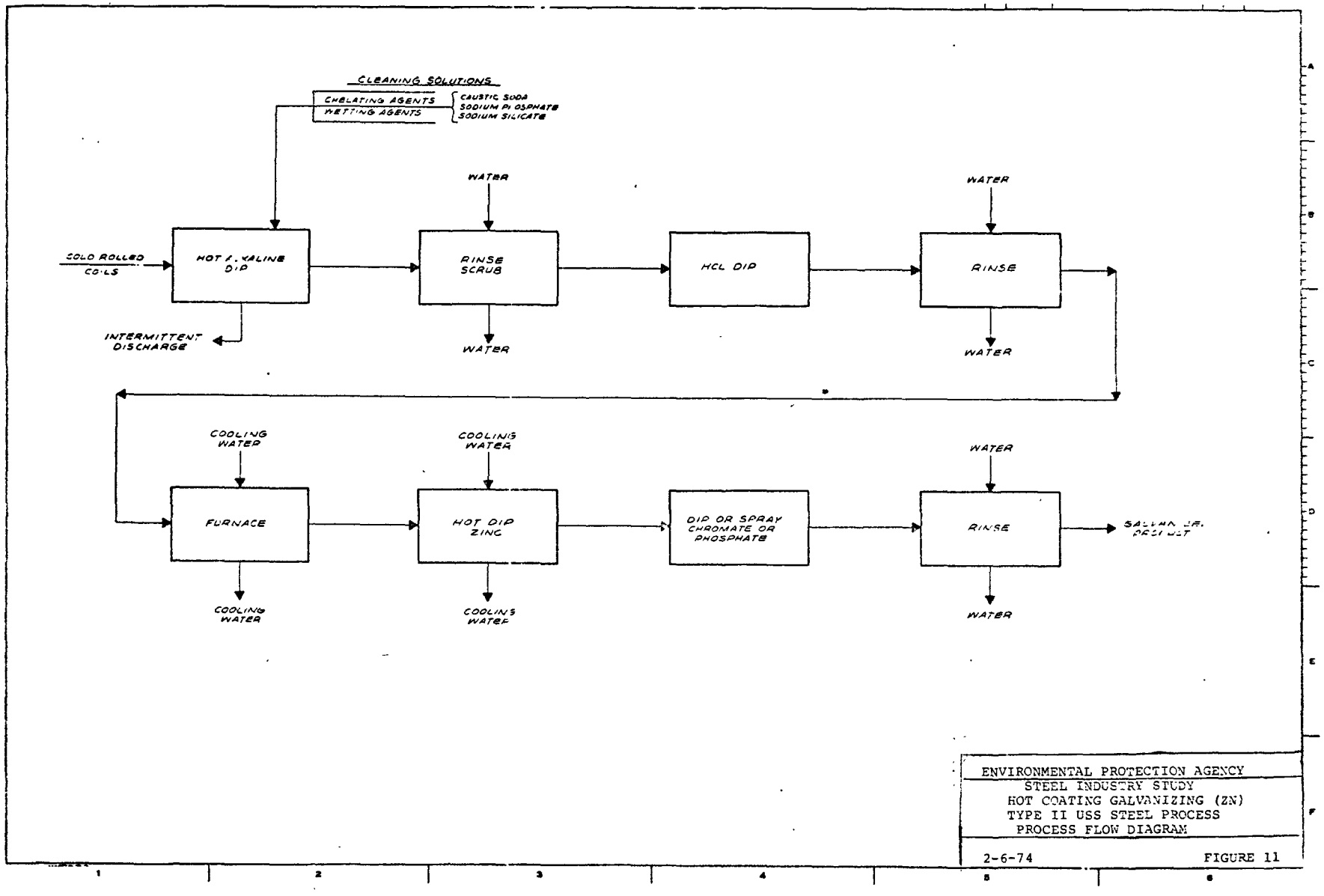

ENVIRONMENTAL PROTECTION AGENCY
STEEL INDUSTRY STUDY
HOT COATING GALVANIZING (ZN)
TYPE II USS STEEL PROCESS
PROCESS FLOW DIAGRAM

2-6-74 FIGURE 11

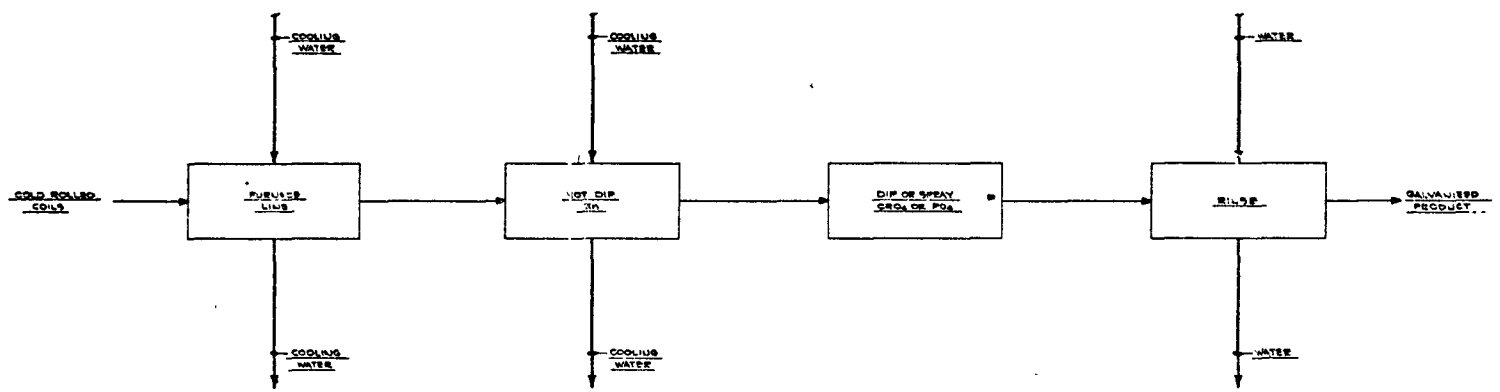

ENVIRONMENTAL PROTECTION AGENCY
STEEL INDUSTRY STUDY
HOT COATING GALVANIZING (ZN)
TYPE II
PROCESS FLOW DIAGRAM

2-5-74 FIGURE 12

since both lead and tin are cathodic to iron in most environments, corrosion is actually accelerated if any portion of the base metal is exposed. For this reason, terne coatings are usually thicker than other metallic coatings, and for maximum corrosion resistance, even the thickest terne coatings benefit from painting or other protective finishing.

The batch-dip terne coating operation normally is performed on cold reduced, batch annealed, and temper rolled coils cut into sheets. Oils and greases are removed via alkaline or solvent (mineral spirits) cleaning, and final surface preparation requires an HCl dip just prior to coating. Excess acid is squeezed from the sheets by rubber rolls, and the sheets are conveyed through a flux box containing a hot solution of zinc chloride in hydrochloric acid, or a molten zinc chloride salt bath, to remove any residual iron oxides, and leave a dry steel surface. The sheets are then passed downward through a molten terne metal bath maintained at 325° to 360°C (617° to 680°F), where the coating is applied, then upward through an oil bath floating atop the terne pot. This oil tends to maintain the high temperature long enough for oil rolls to control deposition and coating thickness evenly over the sheet surfaces. Although most batch-dipped terne coatings utilize a single unit as described above, a wider range of coating weights sometimes necessitates a pass through a second unit of the same type, but including another oil bath instead of the zinc chloride flux box prior to application of the second coat.

The steel strip fed to a continuous terne coating operation receives the same preliminary treatment as the steel processed on the batch-dip line, except that it remains in the coil form, and the cleaning procedure prior to pickling is most often done electrolytically. The normal sequence is oil and grease removal in an electrolytic alkaline unit; rinsing and scrubbing with brushes; pickling; terne coating; and oiling via a bath similar to batch dipping. After cooling, residual oils are removed in a branner, which consists of tandem sets of cleaning rolls made of thousands of tightly compressed flannel discs. Middlings from grain milling, called bran, are fed to the first set of rolls to absorb moisture and excess oil, while the remaining rolls distribute a light oil film evenly over the entire coated surface. The final product is then recoiled, or cut to sizes for shipment as terne coated flats. More specific details of the terne line are shown on Figure 13.

Aluminum. The third major metallic coating applied using the hot-dipped technique is aluminum. Products made of

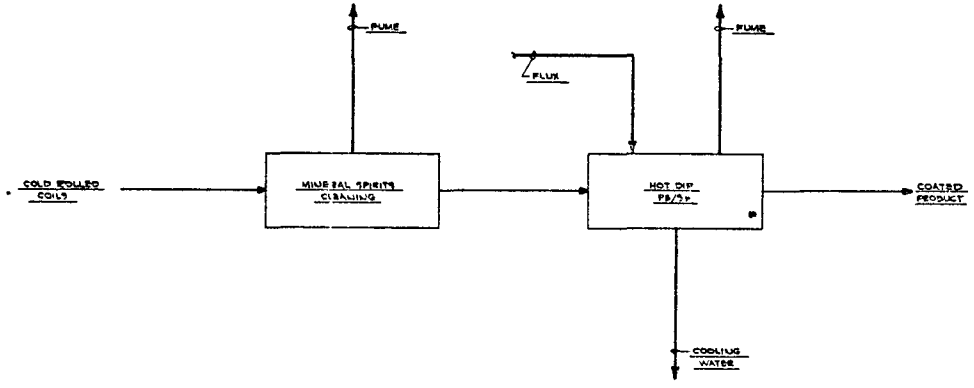

ENVIRONMENTAL PROTECTION AGENCY
STEEL INDUSTRY STUDY
HOT COATING TERNE PLATE
PROCESS FLOW DIAGRAM

2-6-74 FIGURE 13

aluminum coated steel include bright and matte finished sheets and strip used as building materials in marine, industrial, or other environments where high degrees of resistance to corrosion are required; aluminum coated wire for chain-link and field fencing, barbed wire, telephone wire, and screening; and batch treated small parts where decorative finishes are required.

The batch treatment process is done either by using a conventional molten metal bath, as in zinc or terne coating, or by a special cementation process called calorizing. Thoroughly cleaned, degreased, and dried steel articles are packed in a rotating drum, along with a mixture of aluminum powder, aluminum oxide, and ammonium chloride. As the drum rotates inside a furnace at 940°-955°C (1,724°-1,751°F) a reducing gas is passed into the drum, and the mixture is tumbled for 4-5 hours. A solid solution of aluminum in iron, richest in aluminum near the surface, forms the coating. This type of coating is especially effective in protecting steel from oxidation at high temperatures, hence its use in pyrometer and superheater tubes, and in a variety of oil refinery applications.

The continuous aluminum coating process is performed using cold rolled steel strip or steel wire. The strip lines are usually furnace lines, with an annealing step just prior to the hot dip into molten aluminum. The sequence is much the same as zinc coating on a furnace line. The cold rolled steel coils are cleaned in a hot alkaline solution, rinsed, and given a light pickling in hot acid, followed by a final rinse. An annealing furnace softens the otherwise hard carbon steel, and the coating is applied immediately following the furnace. The strip exiting the aluminum bath is cooled, oiled if required, and recoiled or cut to size for shipment. There is usually no chemical treatment or final rinse following the aluminizing dip.

In making aluminum coated wire products by the hot-dipped process, clean, cold-drawn carbon-steel wire is passed through the molten aluminum bath at 660°-680°C (1,220-1,256°F). This temperature is high enough to soften the carbon-steel wire sufficiently that an annealing furnace is not required, but the tensile strength of the wire is reduced, rendering it unsuited for certain applications. This problem is readily corrected by cold-drawing the wire coating, which not only raises the tensile strength, but also provides a very bright final finish to the coating.

More specific details of the aluminizing line are shown on Figure 14.

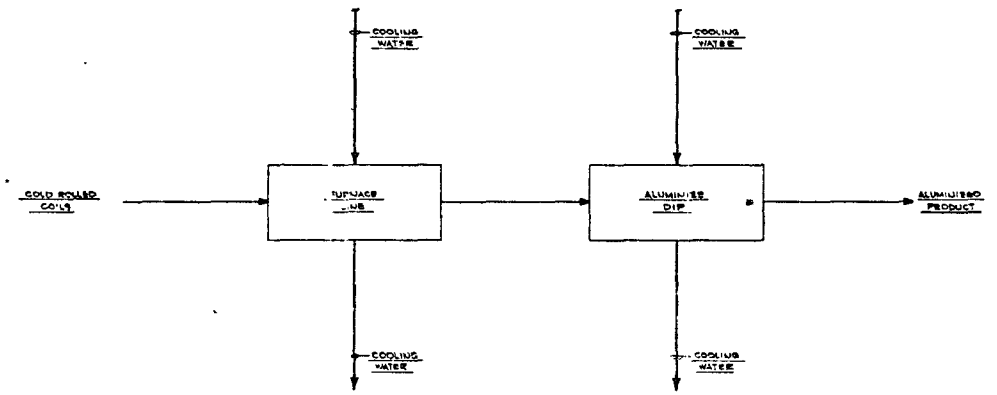

ENVIRONMENTAL PROTECTION AGENCY
STEEL INDUSTRY STUDY
HOT COATING ALUMINIZING
PROCESS FLOW DIAGRAM

2-5-74 FIGURE 14

Rationale for Categorization - Factors Considered

With respect to identifying any relevant, discrete categories for the iron and steel industry, the following factors were considered in determining industry subcategories for the purpose of the application of effluent limitation guidelines and standards of performance:

1. Manufacturing processes
2. Products
3. Wastewater constituents
4. Gas cleaning equipment
5. Waste treatability
6. Size and age
7. Land availability
8. Aqueous waste loads
9. Process water usage

After considering all of these factors, it was concluded that the iron and steel industry is comprised of separate and distinct processes with enough variability in product and waste to require categorizing into more than one giant unit operation. The individual processes, products, and the wastewater constituents comprise the most significant factors in the categorization of this most complex industry. Process descriptions are provided in this section of the report delineating the detailed processes along with their products and sources of wastewaters. Waste treatability in itself is of such magnitude that in some industries, categorization might be based strictly on the waste treatment process. However, with the categorization based primarily on the process with its products and wastes, it is more reasonable to treat each process waste treatment system under the individual category or subcategory. Waste treatability is discussed at length under Section VII, Control and Treatment Technology.

Size and age of the plants has no direct bearing on the categorization. The processes and treatment systems are similar regardless of the age and size of the plant. Tables 6 through 16 provide, in addition to the plant size, the geographic location of the plant along with the age of the plant and the treatment plant. It can be noted that neither the wastes nor the treatment will vary with respect to the age or size factor. Therefore, age and size in itself would not substantiate industry categorization. The aforementioned tables should be tied back to the discussion in Sections VII and VIII, related to raw waste loads, treatment system, and plant effluents.

TABLE 6

PLANT AGE AND SIZE

HOT FORMING PRIMARY

Plant	Location	Production KKg/Day	Production Ton/Day	Plant Installed Year	Treatment Plant Installed Year
A-2	Northeastern	4950	(5460)	*	1971
B-2	Northeastern	6965	(7680)	*	1971
C-2	Northern Great Lakes	3855	(4250)	1943	1970
D-2	Northern Great Lakes	2775	(3060)	1925 & 1937	1971-72
L-2	Midwest	9850	(10,860)	1967	1967-68

*Plant did not provide information

TABLE 7

PLANT AGE AND SIZE

HOT FORMING SECTION

Plant	Location	Production KKg/Day	Production Ton/Day	Plant Installed Year	Treatment Plant Installed Year
A-2	Northeastern	4950	(5460)	*	1971
D-2	Northern Great Lakes (2 mills)	1730	(1910)	1907-1961	1971-1972
E-2	Central Prairie (2 mills)	1930	(2130)	1968-1970	1970-1971
F-2	Northern Great Lakes	2050	(2260)	1968-1969	1968-1969
G-2	Midwest	535	(590)	*	1971-1972
H-2	Middle Atlantic	725	(800)	1910-1967	1950-1969
I-2	Midwest	1400	(1540)	1956	1967

*Plant did not provide information

DRAFT

TABLE 8

PLANT AGE AND SIZE

HOT FORMING FLAT

Plant	Location	Production KKg/Day	Production Ton/Day	Plant Installed Year	Treatment Plant Installed Year
J-2 (S&S)	Northern Great Lakes	13,710	(15,120)	1967 1936	1967 1953-1970
K-2 (PLATE)	Southwest	2,580	(2,850)	1970	1970
L-2 (S&S)	Midwest	10,500	(11,580)	1967	1967-68
M-2 (S&S)	Northern Great Lakes	9,980	(11,000)	1965-69	1965
N-2 (S&S)	Northern Great Lakes	1,800	(1,980)	1960	1969

TABLE 9

PLANT AGE AND SIZE

PIPE AND TUBES

Plant	Location	Production KKg/Day	Production Ton/Day	Plant Installed Year	Treatment Plant Installed Year
E-2	Central Prairie	500	(550)	1953	1970-1971
GG-2	Midwest	215	(235)	*	1970-1973
HH-2	Southwest	91	(100)	*	
II-2	Middle Atlantic	570	(625)	*	1972
JJ-2	Middle Atlantic	265	(290)	*	1971
KK-2	Middle Atlantic	465	(515)	1957-1972	1970-1973

*Plant did not provide information

TABLE 10

PLANT AGE AND SIZE

PICKLING - SULFURIC ACID - BATCH

Plant	Location	Production KKg/Day	Production Ton/Day	Plant Installed Year	Treatment Plant Installed Year
I-2	Midwest	440	(485)	1964	1967
		395	(435)	1942	1967
O-2	Northern Great Lakes	180	(200)	*	1969
P-2	Middle Atlantic	125	(140)	*	1970-1971
Q-2	Northern Great Lakes	110	(120)	1971	1971
R-2	Middle Atlantic	900	(990)	*	1968
S-2	Middle Atlantic	235	(260)	1957-1972	1972-1973

*Plant did not provide information

TABLE 11

PLANT AGE AND SIZE

PICKLING - HYDROCHLORIC ACID - BATCH AND CONTINUOUS

Plant	Location	Production KKg/Day	Production Ton/Day	Plant Installed Year	Treatment Plant Installed Year
I-2	Midwest	65	(70)	1917	1967
U-2	Northern Great Lakes	25	(30)	*	PRE-1955
V-2	Northern Great Lakes	215	(240)	*	*
W-2	Canada	3445	(3800)	*	*
X-2	Midwest	1380	(1520)	1952	1972
Y-2	Canada	1650	(1820)	*	1965-1974
Z-2	Northern Great Lakes	1260	(1390)	1968	1968
AA-2	Northern Great Lakes	2610	(2880)	*	1973
BB-2	Midwest	6675	(7360)	1968	1969

*Plant did not provide information

TABLE 12

PLANT AGE AND SIZE

COLD ROLLING

Plant	Location	Production KKg/Day	Production Ton/Day	Plant Installed Year	Treatment Plant Installed Year
X-2	Midwest	2060	(2270)	1967	1967
BB-2	Midwest	4900	(5400)	1969	1969
DD-2	Midwest	1890	(2085)	1961-1968	1961-1970
EE-2	Northern Great Lakes	2800	(3085)	1965	1966-1972
FF-2	Northern Great Lakes	3870	(4265)	1970	1970

TABLE 13

PLANT AGE AND SIZE

HOT COATING - GALVANIZING

Plant	Location	Production KKg/Day	Production Ton/Day	Plant Installed Year	Treatment Plant Installed Year
I-2	Midwest	65	(70)	1917	1967
V-2	Northern Great Lakes	5	(6)	*	*
MM-2	Middle Atlantic	1000	(1100)	1968	1951-1967
NN-2	Middle Atlantic	1585	(1750)	*	1971

*Plant did not provide information

TABLE 14

PLANT AGE AND SIZE

HOT COATINGS - TERNE

Plant	Location	Production KKg/Day	Production Ton/Day	Plant Installed Year	Treatment Plant Installed Year
OO-2	Midwest	490	(540)	1964	No Treatment
PP-2	Middle Atlantic	475	(525)	1957	No Treatment

TABLE 15

PLANT AGE AND SIZE

COLD COATINGS - TIN

Plant	Location	Production KKg/Day	Production Ton/Day	Plant Installed Year	Treatment Plant Installed Year
MM-2	Middle Atlantic	1065	(1175)	1951-1961	1951-1967
QQ-2	Midwest	840	(925)	1961	1961
RR-2	Northern Great Lakes	1080	(1190)	1965-1970	1966-1971
SS-2	Middle Atlantic	955 405	(1050) (445)	1963&1967 1957	1971 1971
TT-2	Middle Atlantic	1005	(1110)	1944	No treatment

TABLE 16

PLANT AGE AND SIZE

COLD COATINGS - CHROME

Plant	Location	Production KKg/Day	Production Ton/Day	Plant Installed Year	Treatment Plant Installed Year
MM-2	Middle Atlantic	815	(900)	1970	1951-1967
QQ-2	Midwest	575	(630)	1961	1961
RR-2	Northern Great Lakes	760	(840)	1970	1966-1971
SS-2	Middle Atlantic	955	(1050)	1970	1971
UU-2	Middle Atlantic	200	(220)	*	No treatment

*Plant did not provide information

The number and type of pollutant parameters of significance varies with the operation being conducted and the raw materials used. The waste volumes and waste loads also vary with the operation. In order to prepare effluent limitation guidelines that would adequately reflect these variations in significant parameters and waste volumes, the industry was subcategorized primarily along operational lines with permutations where necessary, as indicated in Table 17.

Selection of Candidate Plants for Visits

A survey of existing treatment facilities and their performance was undertaken to develop a list of best plants for consideration for plant visits. Information was obtained from:

a. The Study Contractor's Personnel
b. State Environmental Agencies
c. EPA Personnel
d. Personal Contact
e. Literature Search
f. Industry Sources
g. Permit Applications
h. Perimits

Since the steel industry is primarily situated in 15 states, greatest contribution was obtained from state and EPA personnel located in the following states: (a.) Alabama, (b.) California, (c.) Colorado, (d.) Illinois, (e.) Indiana, (f.) Kentucky, (g.) Maryland, (h.) Michigan, (i.) Missouri, (j.) New York, (k.) Ohio, (l.) Pennsylvania, (m.) Texas, (n.) Utah, and (o.) West Virginia.

Personal experiences and contacts provided information required to assess plant processes and treatment technology. Although an extensive literature search was conducted, the information was generally sketchy and could not be relied upon solely without considerable further investigation.

Upon completion of this plant survey, the findings were compiled and preliminary candidate lists were prepared on those plants that were considered by more than one source to be providing the best waste treatment. These lists were submitted to the EPA by the study contractor for concurrence on sites to be visited. The rationale for plant selections in all the subcategories is presented in Table 18. In several instances, last minute substitutions had to be made because of the non-availability of the plant. In several other instances, while at the plant an additional subcategory was sampled to provide a complete study of

TABLE 17

SUBCATEGORIZATION OF THE
HOT FORMING AND COLD FINISHING OPERATIONS

I. Hot Forming - Primary

II. Hot Forming - Section

III. Hot Forming - Flat

IV. Pipe and Tubes

V. Pickling - Sulfuric Acid - Batch

VI. Pickling - Hydrochloric Acid - Batch and Continuous

VII. Cold Rolling

VIII. Hot Coatings - Galvanizing

IX. Hot Coatings - Terne

X. Miscellaneous Runoffs - Storage Piles, Casting & Slagging

XI. Cooling Water Blowdown

XII. Utility Blowdown - Water Treatment

XIII. Maintenance Department Wastes

XIV. Central Treatment

DRAFT

TABLE 18
Rationale for Plant Selections
Hot Forming

PRODUCTION FACILITIES	WASTEWATER TREATMENT	BASIS FOR SELECTION
Blooming Billets Bar Rod C-2	scale pit scale pit scale pit scale pit	The use of rapid rate mixed media polishing filters following some of the secondary hot rolling scale pits.
Blooming Billet Rod	scale pit scale pit scale pit	The use of rapid rate mixed media polishing filters following some of the secondary hot rolling scale pits.
Blooming Slabbing Billet Bar Structural Plate Sheet F-2	scale pit scale pit scale pit scale pit scale pit scale pit scale pit	Use of hydromation polishing filters following some of the secondary hot rolling scale pits.
Blooming & Slabbing Billets Bar Hot strip N-2	scale pit scale pit scale pit scale pit	The use of rapid rate mixed media polishing filters following some of the secondary hot rolling scale pits.
-	-	The use of rapid rate mixed media polishing filters following some of the secondary hot rolling scale pits.

DRAFT

TABLE 18

Hot Forming

PRODUCTION FACILITIES	WASTEWATER TREATMENT	BASIS FOR SELECTION
Blooming Slabbing Billet Bar Strip-sheet-plate	scale pit scale pit scale pit scale pit scale pit	The use of rapid rate mixed media polishing filters following some of the secondary hot rolling scale pits.
Strip-sheet plate K-2	scale pit	The use of rapid rate mixed media polishing filters following some of the secondary hot rolling scale pits.
Slabbing Billets Bar Plate Rail Hot strip J-2	scale pit scale pit scale pit scale pit scale pit scale pit	The use of rapid rate mixed media polishing filters following some of the secondary hot rolling scale pits.
Blooming Slabbing Billet Bar Structural A-2	scale pit scale pit scale pit scale pit scale pit	The use of rapid rate mixed media polishing filters following some of the secondary hot rolling scale pits.
Blooming Slabs Billet & Sheet Bar Rod & Bar Plate Hot strip	scale pit scale pit scale pit scale pit scale pit scale pit	The use of rapid rate mixed media polishing filters following some of the secondary hot rolling scale pits.

DRAFT

TABLE 18

Pickling

PRODUCTION FACILITIES	WASTEWATER TREATMENT	BASIS FOR SELECTION
Wire Mill Q-2	Batch type - H_2SO_4 acid regeneration	Zero discharge of process wastewater pollutants.
Strip Mill T-2	Continuous type - H_2SO_4 acid regeneration	Zero discharge of process wastewater pollutants.
Wire Mill O-2	Batch type - H_2SO_4 acid regeneration	Zero discharge of process wastewater pollutants.
Wire Mill	Batch type - H_2SO_4 acid regeneration	Zero discharge of process wastewater pollutants.
Bars, shapes, tubing P-2	Batch type - H_2SO_4 acid regeneration	Vacuum crystallization utilized for cooling and producing heptahydrate. Oxide removal by non acid technique.
Strip Mill	Continuous type - H_2SO_4 acid regeneration	Utilizes combination shot blasting and pickling for oxide removal.
Continuous strip Y-2	Acid regeneration - HCl - Woodall - Duckham (Spray roaster)	Process has been in use for several years.

DRAFT

TABLE 18

Pickling

PRODUCTION FACILITIES	WASTEWATER TREATMENT	BASIS FOR SELECTION
Continuous strip W-2	Acid regeneration HCl - Lurgi (fluid bed)	Process has been in use for several years.
Continuous strip	Acid regeneration - HCl Woodall - Duckham (spray roaster)	Process has been in use for several years.
Continuous strip X-2	Acid regeneration - HCl Woodall - Duckham (spray roaster)	New system - start up mid 1973.
Continuous strip	Acid regeneration - HCl Lurgi - (fluid bed)	New system - start up late 1973 - or early 1974.
Continuous Strip BB-2	Continuous type - HCl acid - lime neutralization of rinse water	Reported as good by steel industry representatives
Continuous wire pickling batch rod pickling	Rinses to central treatment lagoon	Reported as good by Vendor
Batch pickling tubes R-2	Lime slurry treatment of rinse waters	Reported as good by literature reference

DRAFT

TABLE 18

Pickling

PRODUCTION FACILITIES	WASTEWATER TREATMENT	BASIS FOR SELECTION
Batch HCl wire pickling V-2	-	Recommended by equipment vendor
Batch HCl wire pickling U-2	-	Recommended by equipment vendor

DRAFT

TABLE 18

Cold Rolling

PRODUCTION FACILITIES	WASTEWATER TREATMENT	BASIS FOR SELECTION
5-stand tandem cold mill. Cold rolled sheet and tin plate. FF-2	4 - flat bed filters 6000 gpm coolant system, recirculating water, recirculating detergent, and waste treatment reservoirs.	Reported as good by steel industry representative
5-stand tandem cold mill. Cold rolled sheet.	1 - flat bed filter 1500 gpm detergent solution system.	Reported as good by vendor
5-stand tandem cold rolled sheet and tin plate. DD-2	2 - flat bed filters 6000 gpm oil and water coolant system. 1 - special skimmer for direct application oil.	Reported as good by vendor
5-stand tandem - tin plate and cold rolled sheet. 2 stand temper.	1 - 5500 gpm solution system. 1 - 1500 gpm detergent recirculating system. 1 - 25000 gallon waste treatment system. 1 - tramp oil skimmer. 4 - flat bed filters.	Reported as good by vendor
3 - stand tandem cold rolled sheets.	3500 gpm soluble oil and water system. 1 - tramp oil skimmer. 1 - flat bed filter.	Reported as good by vendor
3 - stand tandem tin plate and cold rolled steel.	2 - flat bed filters 3000 gpm-combination direct application and solution system.	Reported as good by vendor
2 - stand tandem tin plate.	1 - 1000 gpm solution system. 1 - 1500 gpm solution system. 1 - tramp oil skimmer. 2 - flat bed filters.	Reported as good by vendor

DRAFT

TABLE 18

Cold Rolling

PRODUCTION FACILITIES	WASTEWATER TREATMENT	BASIS FOR SELECTION
5-stand tandem cold rolled steel 2-stand tandem tin plate. EE-2	4 - flat bed filters 9600 gpm solution system. 3000 gpm solution system 1 - flat bed filter.	Reported as good by steel industry representative
6-stand tandem tin plate	4 - flat bed filters 12000 gpm solution system.	Reported as good by vendor
5-stand tandem cold rolled steel. X-2	2 flat bed filters 6000 gpm solution system.	Reported as good by steel industry representative
4-stand tandem cold rolled steel. 5-stand tandem cold rolled sheets.	1 - flat bed filter 2500 gpm solution system. 2 - flat bed filters - flotation reservoir. 9400 gpm soluble oil and water coolant system.	Reported as good by steel industry representative
5-stand tandem.	2 - tramp oil skimmers 2 - flat bed filters.	Reported as good by steel industry representative
5-stand tandem.	4 - flat bed filters. 8000 gpm coolant system. 3000 gpm detergent system.	Reported as good by steel industry representative

DRAFT

TABLE 18

Hot Coatings - Galvanizing

PRODUCTION FACILITIES	WASTEWATER TREATMENT	BASIS FOR SELECTION
- OO-2	Combined treatment	One type of three distinct processes. Recommended by equipment manufacturer
-	Combined treatment	Process used only at USS plants
180,000T/yr MM-2	Combined treatment for hot and cold coatings	Process used only at USS plants
-	-	Process used only at USS plants
- NN-2	-	Third type process used at Wheeling-Pittsburgh plants. Reported as good treatment by industry representative

DRAFT

TABLE 18

Hot Coatings - Terne Line

PRODUCTION FACILITIES	WASTEWATER TREATMENT	BASIS FOR SELECTION
115,000T/yr PP-2	Combined treatment	Reported as good by industry representative and mill builder
150,000T/yr OO-2	Combined treatment	Reported as good by industry representative and mill builder
-	Combined treatment	Reported by mill builder

DRAFT

TABLE 18

Hot Coatings - Aluminizing

PRODUCTION FACILITIES	WASTEWATER TREATMENT	BASIS FOR SELECTION
-	Combined treatment for hot and cold coatings	Reported by equipment manufacturer

several systems that were tied together, i.e., cold rolling - pickling; coating - pickling. Table 19 presents a summary of the requirements for the study.

TABLE 19
HOT FORMING AND COLD FINISHING OPERATIONS
INDUSTRIAL CATEGORIZATION AND
SURVEY REQUIREMENTS

MAIN CATEGORY	SUBCATEGORY	NUMBER OF LOCATIONS SURVEYED	PRODUCTION VARIATIONS WITHIN SUBCATEGORY TO BE INVESTIGATED	NUMBER OF SAMPLES EACH LOCATION				
				INTAKE	RAW WASTE	TREATED EFFLUENT	COOLING WATER	MISC.
				GRAB	C O M P O S I T E		GRAB	
I. Hot Forming								
Primary		5	3 - Blooming 2 - Structural	1	3	3	1	1
II. Hot Forming								
Section		7	3 - Bar 2 - Billet 2 - Rod	1	3	3	1	1
III. Hot Forming								
Flat	A. Plate	1		1	3	3	1	1
	B. Sheet & Strip	4		1	3	3	1	1
IV. Pipe & Tubes		6	2 - Butt Weld 2 - Seamless 1 - Electric Resistance weld 1 - Electric arc weld	1	3	3	1	1
V. Pickling								
Sulfuric Acid	A. Batch	7	6 - Batch rinses 1 - Continuous rinse	1	3	3	1	1
	B. Continuous	1	6 - Concentrated 2 - Scrubbers					
VI. Pickling								
Hydrochloric Acid	A. Batch and continuous	8	2 - Batch rinses 6 - Continuous rinses 8 - Concentrated 4 - Scrubbers 3 - Absorber vent scrubbers	1	3	3	1	1

TABLE 19
HOT FORMING AND COLD FINISHING OPERATIONS
INDUSTRIAL CATEGORIZATION AND
SURVEY REQUIREMENTS

MAIN CATEGORY	SUBCATEGORY	NUMBER OF LOCATIONS SURVEYED	PRODUCTION VARIATIONS WITHIN SUBCATEGORY TO BE INVESTIGATED	NUMBER OF SAMPLES EACH LOCATION				
				INTAKE	RAW WASTE	TREATED EFFLUENT	COOLING WATER	MISC.
				GRAB	C O M P O S I T E		GRAB	
VII. Cold Rolling								
	A. Recirculation	4		1	3	3	1	1
	B. Combination	1		1	3	3	1	1
	C. Direct Application							
VIII. Coatings								
	A. Hot	6	3 - Galvanizing 1 - Aluminizing 2 - Terne plate	1	3	3	1	1
	B. Cold	8	2 - Halogen Tin 2 - Sulfonic Tin 1 - Alkaline Tin 3 - Chrome	1	3	3	1	1
IX. Miscellaneous Runoffs Storage Piles, Casting & Slagging								
	A. Coal Pile	1	-					1
	B. Ore Pile	1	-					1
	C. Blast Furnace Slag	1	-					1
	D. Steel Slag	1	-					1
	E. Stone Pile	1	-					1
	F. Pig Casting	1	-					1
	G. Ingot Casting	1	-					1
X. Cooling Water Blowdowns		10					1	

TABLE 19
HOT FORMING AND COLD FINISHING OPERATIONS
INDUSTRIAL CATEGORIZATION AND
SURVEY REQUIREMENTS

MAIN CATEGORY	SUBCATEGORY	NUMBER OF LOCATIONS SURVEYED	PRODUCTION VARIATIONS WITHIN SUBCATEGORY TO BE INVESTIGATED	NUMBER OF SAMPLES EACH LOCATION				
				INTAKE	RAW WASTE	TREATED EFFLUENT	COOLING WATER	MISC.
				GRAB	COMPOSITE		GRAB	
XI. Utility Blowdowns								
	A. Plant Service	2						1
	B. Power Generation	1						1
	C. Steam Generation	1						1
XII. Maintenance Department Wastes		1						1
XIII. Central Treatment		12		1	3	3	1	1

SECTION V

WATER USE AND WASTE CHARACTERIZATION

GENERAL

The wastewater streams for the industry are described individually in their respective subcategories. Waste loads were developed by actual plant sampling programs at selected better plants on which EPA concurred. Raw waste loads are defined as the contaminants attributable to the process of concern. The basis for plant selection was primarily on their waste treatment practices. Therefore, further rationale for selection of the plant sites is presented under Section VII Control and Treatment Technology.

HOT FORMING OPERATIONS

Wastewater results from the hot forming operation because of the large amount of direct contact cooling and descaling waters required between the hot steel and the rolling mill equipment. Approximately 4% of the water sprayed on the hot steel evaporates and the balance is discharged beneath the rolling mill equipment to trenches called flumes.

When the hot steel product is being rolled, iron oxide scale keeps forming on the surface of the hot steel and this scale is continuously removed by direct contact high pressure (1,000-2,000 psig) spray water before each roll pass of the product. In case of a reversing mill, descaling sprays would be mounted on both sides of the mill stands. Low pressure spray cooling water is also used to keep the mill stand and table rolls cool as the hot steel passes over or in between them.

Due to the many different types of hydraulic and lubrication systems required to maintain the rolling mill equipment, the direct contact cooling and descaling waters pick up oil and greases when being sprayed over the mill equipment. Also, water soluble oil solutions are sometimes used for mill roll spray coolant waters.

When automatic hot scarfing machines are used for the final surface finishing of the blooms or slabs, fume, smoke, and slag is produced.

The scarfing operation on hot steel results in a continuous production of molten slag ahead of the reaction zone. This slag is directed and driven to a slag pit or trench beneath

the scarfer machine and water is used to break-up and flush the slag being generated by the scarfing process. Water is also used to spray exposed equipment items in the vicinity of the scarfing reaction to protect them from heat and flying slag particles. High pressure water (150 psig) is used for flushing the slag from the steel surface while (40 psig) low pressure water is used for the spray cooling water.

The hot scarfing process also results in appreciable quantities of fume and smoke, the quantity and density depending upon steel analysis, scarfing oxygen pressure, and efficiency of the slag water jets. The smoke contains some solids in addition to steam and gases. The solids are mainly oxides of iron with traces of alloying elements found in the scarfed steel. The oxides are submicron in size and, therefore, it is necessary to collect this smoke and discharge outside of the mill building by means of a suitable exhaust system.

Wastewater results when wet type dust collectors are used to contain and clean the exhaust gases from the scarfer. Dry collectors cannot be used due to the saturated nature of the exhaust gases.

HOT FORMING - PRIMARY

Blooming and Slabbing Mills

General process and water flow schematic of typical blooming and slabbing mills are presented on Figure 2.

The blooming and slabbing mills have generally four main plant water systems.

a. Descaling Water Sprays
b. Table Roll Cooling Sprays
c. Scarfer Water Spray System
d. Mill Stand Cooling Sprays

All the water cooling and descaling systems are generally a once-through water system discharged into a scale pit where the scale is settled out, oil is trapped by means of weirs and the overflow water is pumped to a sewer. Some mills do not have scale pits but use mechanical means such as drag scrapers or clam buckets for the scale removal while the water is collected in a sump and pumped to a central plant water treatment system.

The wet collecting systems used for the scarfing fume are generally recycle systems with a system blowdown to maintain cycles of concentration. The system's blowdown is generally pumped backed to the mill scale pit.

Table 20 summarizes the plant raw waste loads for the plants studied.

HOT FORMING - SECTION

General process and water flow schematic of a typical mill is presented on Figure 3.

Section mills generally have water systems similar to primary mills as discussed above.

Table 21 summarizes the plant raw waste loads for the plants studied.

HOT FORMING - FLAT

General process and water flow schematic of typical plate and hot strip mills are presented on Figure 4.

Plate Mills

The plate mills have generally four types of mill water systems.

a. Descaling water sprays - Direct Contact
b. Table roll and plate cooling water sprays - Direct Contact
c. Mill stand roll cooling sprays - Direct Contact
d. Reheat slab furnace skid cooling water - Noncontact

The slab reheat furnace noncontact cooling waters can either be once-through or recycled water systems depending upon mill water availability. Flows up to 315 l/sec (5,000 gpm) are required to cool the furnace skids but discharged waters are noncontact cooling and will only pick up heat. The descaling sprays, table roll, and plate cooling sprays and mill stand rolling cooling sprays are generally oncethrough systems where the waters are discharged to flumes or sumps beneath the plate mill stands. The scale and oilbearing waters are flushed into scale pits where the majority (up to 90%) of scale is settled out, oil is removed by means of weirs and skimmers and scale pit overflow water is discharged to sewers. Removal of scale is generally through mechanical means such as cranes with clam buckets or drag scraper conveyors beneath the mill stands. About 4% of the

DRAFT

TABLE 20

Characteristics of
Hot Forming Primary Plant Wastes
Net Plant Raw Waste Loads

Characteristics	A-2	B-2	C-2	D-2	L-2
Flow, l/KKg	2,890	2,131	3,248	3,732	2,560
Suspended Solids, mg/l	86	57	21	91	11
Oil and Grease, mg/l	13.9	150	2	5.1	4.3

TABLE 21

Characteristics of
Hot Forming Section Plant Wastes
Net Plant Raw Waste Loads

Characteristics	A-2	D-2-a	D-2-b	D-2-c	E-2-a
Flow, l/KKg	2,485	51,891	51,258	35,045	36,796
Suspended Solids, mg/l	86	38	20	33	71
Oil and Grease, mg/l	14	11	11	13	14

	E-2-b	F-2	G-2	H-2	I-2
Flow, l/KKg	13,198	9,312	16,859	28,969	20,904
Suspended Solids, mg/l	29	12	21	33	125
Oil and Grease, mg/l	5	0	0.4	14	1.4

spray cooling waters evaporate and the balance is discharged to the scale pits.

Hot Strip Mills

The hot strip mills have generally five types of mill water systems:

a. Slab reheat furnace cooling water - Noncontact
b. High pressure descaling water - Direct Contact
c. Low pressure roll coolant water - Direct Contact
d. Table roll and shear cooling waters - Direct Contact
e. Strip spray cooling waters - Direct Contact

The slab reheat furnace noncontact cooling waters can either be once-through or recycled depending upon mill water availability. Flows up to 315 l/sec (5,000 gpm) are required to cool the furnace skids but the discharged waters are noncontact cooling and will only pick up heat.

The descaling sprays, table roll, and shear cooling waters and roll coolant waters are generally once-through systems, where the cooling waters are discharged to flumes or sumps beneath the hot strip mill stands.

The scale and oil-bearing waters are flushed into scale pits where the majority (up to 90%) of scale is settled out, oil is removed by means of weirs and skimmers and scale pit overflow water is discharged to sewers. Removal of scale is generally through mechanical means such as cranes with clam buckets or drag scraper conveyors beneath the mill stands.

The strip spray cooling waters are sprayed to cool the strip after it has been rolled on the final mill finishing stands. This water system may be once-through if good quality water is available, but because of the great quantities required, (up to 4,400 l/sec ±70,000 gpm1 on new hot strip mills) recycle systems are installed. Approximately 8% of the strip cooling waters evaporate and the balance is either discharged to sewers or recycled.

Table 22 summarizes the plant raw waste load for the plants studied.

PIPE AND TUBE MILLS

General process and water flow schematic of pipe and tube mills are presented on Figure 5.

DRAFT

TABLE 22

Characteristics of
Hot Forming Flat Plant Wastes
Net Plant Raw Waste Loads

Characteristics	Plants				
	J-2	K-2	L-2	M-2	N-2
Flow, l/KKg	32,142	23,073	34,215	35,182	30,328
Suspended Solids, mg/l	16	57	11	25	14
Oil and Grease, mg/l	5	4.3	4.3	2	10

DRAFT

TABLE 23

Characteristics of
Pipe and Tubes - Hot Worked Plant Wastes
Net Plant Raw Waste Loads

Characteristics	Plants				
	E-2	GG-2	II-2	JJ-2	KK-2
Flow, l/KKg	53,255*	7,089	15,371*	9,562*	2,148
Suspended Solids, mg/l	27	40	50	103	61
Oil and Grease, mg/l	1	7	0	6	-3

*Includes non-contact cooling water flows.

The pipe and tube mills can be classed into three types of hot forming production methods.

1. Butt welded pipe
2. Electric-resistance welded tubing
3. Seamless tubes

Butt welded pipe mills can either be unit type mills which produce a definitive length of pipe, or a continuous butt welded mill where the production is continuous and pipe is cut to suitable lengths by hot saws. Skelp or narrow steel strip is used for the production of butt welded pipe.

The butt welded pipe mills generally have three types of water systems.

1. Noncontact cooling waters in skelp heating furnaces - water cooled skids, water cooled welding bell, etc.

2. Roll cooling spray waters

3. Pipe cooling bed water bosh

The skelp heating furnace noncontact cooling waters can either be once-through or recycled water systems depending upon mill water availability. The effluent waters are noncontact cooling waters and will only increase in heat content.

The roll cooling spray waters are generally once-through water systems where the scale and oil-bearing waters are discharged to flumes or trenches beneath the pipe mill roll stands and in turn flushed into scale pits where scale is settled out and oils removed by means of weirs and skimmers. Removal of scale is generally through mechanical means such as drag scraper conveyors, clam buckets hung on overhead cranes, etc. About 4% of the spray waters evaporate and the balance is discharged to the scale pits.

The pipe cooling bed water bosh is sometimes used to provide adequate cooling capacity without excessively long pipe cooling beds. The waters are generally once-through systems providing direct control cooling and waters are discharged into the roll cooling water systems.

The electric-resistance welded tubing mills have only two types of water systems.

1. Noncontact cooling water for equipment welders, etc.
2. Water soluble oil spray cooling systems

Electric-resistance welded tubing is formed by cold rolling and then is heated by the electric welder as the tube seam is welded. The tube is cooled by passing through a spray of water soluble oils. These waters are generally recycle systems and makeup is required.

The seamless tube mills generally have three types of water systems:

1. Noncontact cooling waters - reheat furnaces, water cooled, piercing mandrels, etc.

2. Roll spray coolant waters

3. Spray water quench

Seamless tube is produced by piercing a solid hot billet or round, and then finished through further working of the seamless tube product through steel rolls and over internal water cooled mandrels until the proper tube diameter and length is achieved.

The noncontact cooling waters can either be once-through or recycled depending upon mill water availability. The noncontact effluent waters will only increase in temperature.

The roll spray coolant waters are generally once-through systems where the spray water is discharged to scale pits via flumes and trenches beneath the tube mill stands. Scale is settled out and oil is trapped and removed by means of weirs and skimmers.

The spray quench water system is used to produce higher strength tubes than just hot working the tubing. The tubing is quenched, reheated, and quenched by means of water sprays. These waters are once-through systems.

Tables 23 and 24 summarize the plant raw waste loads for the plants studied.

PICKLING

General process and water flow schematics of the continuous and batch pickling operations are presented on Figures 6 and 7. The three major wastewater sources associated with carbon steel pickling are inseparable from the process. They include:

TABLE 24

Characteristics of
Pipe and Tube - Cold Worked Plant Wastes
Net Plant Raw Waste Loads

Characteristics	Plants
	HF-2
Flow, l/KKg	24,019
Suspended Solids, mg/l	19
Oil and Grease, mg/l	61

TABLE 25

Characteristics of
Pickling - Sulfuric Acid - Batch Plant Wastes
Net Plant Raw Waste Loads from Spent Pickle Liquor

Characteristics	Plants					
	I-2	O-2	P-2	Q-2	R-2	S-2
Flow, l/KKg	151	104	60	101	23	132
Dissolved Iron, %	N/A	8.6	6.2	8.0	6.8	N/A
Suspended Solids, mg/l	N/A	48	260	N/A	70	N/A

Spent Pickle Liquor. The pickling solution becomes progressively saturated with ferrous salts. When the ferrous salt content reaches a certain level, the acid becomes ineffective and has to be dumped.

Rinse Water. Rinse water is pickle liquor in dilute form. Disposal of large quantities of rinse water poses a difficult and serious problem.

Acid Vapors and Mists. The emission of pungent and corrosive mist and vapor from the pickling tanks presents serious hazards, both indoors from a health and maintenance standpoint and outdoors as air pollution.

The primary function of a pickling facility is to chemically remove iron scale from steel. The amount of iron removed depends upon the type of steel being pickled and the specific condition of the product. As an example, heavy and bulky steel shapes, such as billets, bars, etc., may experience an iron weight loss (due to pickling) of 1/4%. This would amount to 5 lb Fe loss per ton being pickled. Steel strip or sheet is more typically 1/2% (10 lb Fe per ton pickled). Rod (for manufacture of wire) ranges from 1/2% to 2% (10 lb to 40 lb per ton).

In addition to the free acid and ferrous salt content, the spent liquor could also contain relatively small amounts of other metal sulfates, chlorides, lubricants, inhibitors, hydrocarbons, and other impurities.

SPENT PICKLE LIQUOR

Sulfuric Acid. Typical spent sulfuric pickle liquor averages about 8% free acid and 8% dissolved iron (Fe). A gallon of this spent acid solution weighs about 10 lb.

On this basis, each ton of steel pickled (at 1% loss) would generate about 25 gal. of spent pickle liquor.

Therefore, assuming 16,000,000 tons of steel pickled annually with sulfuric, the yearly volume of spent sulfuric pickle liquor would be 400,000,000 gal. This volume would contain about 320,000,000 lb of free sulfuric acid and essentially the same amount of dissolved iron (as Fe). This amount of iron would appear as about 870,000,000 lb of ferrous sulfate (or 435,000 tons of $FeSO_4$).

Hydrochloric Acid. Typical spent hydrochloric pickle liquor average about 1/2% to 1% free acid and 10% dissolved iron (Fe). A gallon of this spent acid solution weighs about 10

lb. On this basis, each ton of steel pickled (at 1% loss) would generate about 20 gal. of spent pickle liquor.

Therefore, assuming 40,000,000 tons of steel pickled annually with hydrochloric, the yearly volume of spent hydrochloric pickle liquor would be 800,000,000 gal. This volume would contain about 80,000,000 lb of free hydrochloric acid and 800,000,000 lb of dissolved iron (as Fe). This amount of iron would appear as about 1,800,000,000 lb of ferrous chloride (or 900,000 tons of $FeCl_2$).

RINSE WATERS

After pickling is achieved in the acid bath, the material is subjected to a water rinse to remove the acid/iron solution prior to further processing. The traditional method of rinsing calls for high volumes of fresh water for dilution purposes. Pickling facilities vary; however, typical rinse water volumes range from 1.5 to 65 l/sec (25 to 1,000 gal./minute) flow rate. The larger continuous strip pickling lines use 6 to 65 l/sec (100 to 1,000 gpm), most often closer to 20-25 l/sec (300-400 gpm). Batch type pickling facilities average about 1.5-20 l/sec (25 to 300 gpm).

The problem with rinse water is not so much the acid/iron concentrations present, but rather the very high volume of liquid to be treated. Treatment systems for these large flows are costly to build and operate.

ACID VAPORS AND MISTS

All pickling facilities, large or small, continuous or batch, produce acid vapors or mists at the pickling tank. If the tank itself is not equipped with a means of collecting and transporting these emissions away from the pickling line, an indoor health and maintenance problem occurs. If the tank is so equipped and the acid emissions are properly withdrawn from the line, the vapors and mists are transferred outdoors and may create a serious air pollution problem.

Many pickling facilities are properly equipped to include a scrubbing device which uses water to collect the acid mist. This then transfers the air pollution problem into a water pollution problem.

Studies by some steel mills indicate that about 10% to 15% of the acid from a pickling line is lost in the rinse water (as dragout) and in the fume exhaust system.

Tables 25-32 summarize the plant raw waste loads for the plants studied.

COLD ROLLING OPERATIONS

General process and water flow schematic of a typical cold rolling operation is presented on Figure 8.

The major water use on cold reduction mills is for cooling the rolls and the material being rolled. This is accomplished by using a flooded lubrication system to supply both lubrication and cooling. A water-oil emulsion is sprayed directly on the material and rolls as the material enters the rolls. Each stand has its own sprays and where recycle is used, its own recycle system. Past practice has been the direct sewering of the emulsion. However, the high cost of rolling oils and the expense of complying with pollution control regulations are modifying this practice, and recycle and recovery systems are currently in common use.

The water used in a cold rolling mill must be a fairly good quality water, free of suspended matter. High quality rolling oils are added to form the emulsion. Since the material being rolled is clean and free from rust, and since no scale is generated during the rolling, oil and temperature are the basic pollutants in this discharge.

Those mills still using once-through solution systems have installed oil recovery plants. The recovered oil is returned for processing or otherwise disposed of. Those mills operating recirculation systems on all mill stands have no continuous discharge of wastewaters. However, means must be provided for the treatment or disposal of batch discharges of spent rolling solutions. The majority of plants operate as combinations of bath systems, and will have significant volumes of continuously running wastewaters.

Regardless of what systems are used, miscellaneous oil leaks and spills can be troublesome and means must be provided for their control. One area associated with the cold rolling operation but separate from the rolling mill itself is the maintenance and roll finishing shop. Oil-bearing wastewater originating in these areas is a major contributor to wastewater discharges from a cold rolling mill using total

TABLE 26

Characteristics of
Pickling - Sulfuric Acid - Batch Plant Wastes
Net Plant Raw Waste Loads from Rinsing Operations

Characteristics	Plants						
	I-2 (a)	I-2 (b)	O-2	P-2	Q-2	R-2	S-2
Flow, l/KKg	872	1935	N/A	70	33	151	826
Dissolved Iron, mg/l	380	33	46,000	7,500	4,700	460	2,600
Suspended Solids, mg/l	70	21	18	155	20	2,100	1,720

TABLE 27

Characteristics of
Pickling - Hydrochloric Acid - Batch Plant Wastes
Net Plant Raw Waste Load from Spent Pickle Liquor

Characteristics	Plants	
	U-2	V-2
Flow, l/KKg	27	17
Dissolved Iron, %	7.7	10.7
Suspended Solids, mg/l	N/A	N/A

TABLE 28

Characteristics of
Pickling - Hydrochloric Acid - Batch Plant Wastes
Net Plant Raw Waste Load from Rinsing Operations

Characteristics	Plants	
	U-2	V-2
Flow, l/KKg	387	696
Dissolved Iron, mg/l	190	270
Suspended Solids, mg/l	0	0

TABLE 29

Characteristics of
Pickling - Hydrochloric Acid - Continuous Plant Wastes
Net Plant Raw Waste Loads from Spent Pickle Liquor

Characteristics	Plants					
	I-2	W-2	X-2	Y-2	Z-2	AA-2
Flow, l/KKg	151	50	39	67	173	13.6
Dissolved Iron, %	N/A	13.5	N/A	N/A	N/A	11.6
Suspended Solids, mg/l	N/A	88	N/A	N/A	N/A	120

TABLE 30

Characteristics of
Pickling - Hydrochloric Acid - Continuous Plant Wastes
Net Plant Raw Waste Load from Regeneration
Absorber Exhaust Scrubber

Characteristics	Plants		
	W-2	X-2	Y-2
Flow, l/KKg	411	1184	1288
Dissolved Iron, mg/l	70	64	61
Suspended Solids, mg/l	132	70	85

TABLE 31

Characteristics of
Pickling - Hydrochloric Acid - Continuous Plant Wastes
Net Plant Raw Waste Loads from Rinsing Operations

Characteristics	Plants						
	I-2	W-2	X-2*	Y-2	Z-2	AA-2	BB-2*
Flow, l/KKg	917	949	1,972	209	519	24.4	664
Dissolved Iron, mg/l	7	136	220	437	N/A	14,000	1,750
Suspended Solids, mg/l	53	20	12	7	N/A	20	52

*Includes flow from fume hood scrubbers

TABLE 32

Characteristics of
Pickling - Hydrochloric Acid - Continuous Plant Wastes
Net Plant Raw Waste Loads from Fume Hood Scrubbers

Characteristics	Plants	
	W-2	Y-2
Flow, l/KKg	190	174
Dissolved Iron, mg/l	24	4
Suspended Solids, mg/l	4	7

recirculation on all stands. Oil and water leaks in the oil basement also contribute heavily to this problem.

Considerable heat is generated during heavy reductions at high speed on the various types of mills. Not only is the temperature of the product raised but also the temperature of the rolls. This heat is removed from the mill via a flooded lubrication system. A water-oil emulsion is sprayed on the material as it enters the rolls. This emulsion drains off between stands and each stand has its own spray system. In the older mills this emulsion was used once and sewered without any treatment.

Modern continuous cold reduction mills recycle the oil emulsion in the flooded lubrication system. Each stand has its own collection tank and pump to return the emulsion to the sprays. A five stand tandem mill would have five recycle systems, one for each stand. With this arrangement, it is possible to renew one tank of emulsion at a time, or all at once. It is also possible to use different oil emulsions in each tank if the product being rolled so requires. Mills using these recycle systems have no direct discharge to the sewer. However, they do have the problem of disposal of large batch dumps of spent rolling emulsions.

The once-through system has caused many problems for the older mills to remove and recover this oil. Treatment plants and palm oil recovery systems have been installed to reclaim these oils for reprocessing and reuse. In this process various techniques are used to break the emulsion to separate the oil from the water. The water is discharged while the oil is returned to a processor for upgrading and resale. The cost of palm oil and the treatment cost for its recovery brought about the development of the recycle system.

The high cost of rolling oil makes it impractical for new mills to use the once-through system, hence it is the oil cost and not pollution control that dictates the type of system to be installed in new mills. The recycle system eliminates the continuous discharge of oil emulsions from cold rolling mills, however, it does not eliminate the oil discharge problem. Regardless of how tight the system may be, there is always miscellaneous spills and leaks that will occur and there is the problem of treating batch discharges of spent rolling solutions.

Table 33 summarizes the plant raw waste loads for the plants studied.

TABLE 33

Characteristics of
Cold Rolling Plant Wastes
Net Plant Raw Waste Loads

Characteristics	Plants				
	X-2	BB-2	DD-2	EE-2	FF-2
Flow, l/KKg	74	1,268	1,647	73	759
Suspended Solids, mg/l	90	N/A	902	637	194
Oil	41,136	54	1,399	1,180	354

TABLE 34

Characteristics of
Hot Coatings - Galvanizing Plant Wastes
Net Plant Raw Waste Loads

Characteristics	Plants			
	I-2	V-2	MM-2	NN-2
Flow, l/KKg	917	19,500	2,239	5,024*
Suspended Solids, mg/l	94	16	88	104
Oil and Grease, mg/l	15	5	48	20
Zinc, mg/l	N/A	N/A	0.2	145
Chromium, mg/l	N/A	N/A	4.5	1.8
Hexavalent Chromium, mg/l	N/A	N/A	0.003	0.011

*Including flows from fume hood scrubbers

HOT COATING OPERATIONS

Wastewaters generated by the various hot coating techniques practiced in the iron and steel industry fall into three categories:

1. Continuously running rinse waters, which may include rinses following alkaline and acid cleaning operations; rinses following chemical treatment and surface passivation operations; final rinses; and running wastewater flows from fume scrubbing systems associated with air pollution control devices.

2. Intermittent discharges, which may include spent baths from alkaline and acid cleaning operations; flux baths; chemical treatment solutions; and ion exchange regenerant solutions. The plating baths are normally not discharged as wastewater, being either recovered or regenerated as part of the coating operations, or sold to outside contractors for processing and recovery.

3. Noncontact cooling waters associated with the hot coating processes may include furnace cooling water and molten metal pot cooling water.

Galvanizing

General process and water flow schematics of typical galvanizing lines are presented on Figures 10-12.

The continuously running rinse waters generated in galvanizing may include alkaline cleaning rinses; sulfuric or hydrochloric acid rinses; and chromate or phosphate treatment final rinses. Combined total flow rates may range from 10 to 150 l/sec (158-2,380 gpm), depending upon whether the noncontact cooling waters are included or not. The wastewaters may contain suspended and dissolved matter, sulfates, chlorides, phosphates, silicates, zinc, chromium, and oily matter in concentrations ranging from traces to high levels, depending on galvanizing line operating conditions. Intermittent overflows of concentrated alkaline or acid cleaning solutions and flux tank solutions may occur, contributing to the load normally running continuously. These can be minimized by close attention to maintenance and operating conditions and through provision of dragout recovery units where possible. Spent pickle liquor is normally collected separately for disposal or treatment. Typical noncontact cooling water sources from galvanizing lines include zinc pot cooling and, from the so-called "furnace lines," indirect furnace cooling waters.

Terne Coating

General process and water flow schematics of a typical terne line operation are presented on Figure 13.

The continuously running rinses from the terne coating operation may include rinses following immersion in alkaline or mineral spirit degreasing solutions; and sulfuric or hydrochloric acid rinses. Total flows may range from 10 to 60 l/sec (158-950 gpm), depending upon whether the noncontact cooling waters are included or not. This wastewater may contain suspended and dissolved matter, oily matter, sulfates, chlorides, iron, lead, and tin in concentrations which depend on line operating conditions. Intermittent discharges are limited to dragout or spills from cleaning and pickling tanks. Spent pickle liquors are normally collected separately for disposal or treatment. The noncontact cooling water originates due to the necessity for continuously cooling the molten terne pot.

Aluminizing

General process and water flow schematics of a typical aluminizing line is presented on Figure 14.

Continuous running rinses from the aluminum coating operation are limited to alkaline or acid cleaning solution rinse waters. There are no chemical treatment rinses, and usually no final rinse after coating. Often, the steel strip used on an aluminum coating line has been prepared for coating on some other nearby cleaning and pickling line, so there are no wastewaters in direct contact with the product at all. In these cases, the only waters attributable to the process are the noncontact cooling waters used to control temperatures of the furnace and of the molten aluminum pot.

Tables 34 and 35 summarize the net plant raw waste loads for the plants studied.

MISCELLANEOUS RUNOFFS

Miscellaneous runoffs may be defined as some minimal flow of wastewater that emanates from material storage or auxiliary operations associated with a basic steel process. Generally, the wastewater flow is intermittent and the water percolates into the soil or evaporates. In some instances, the area is diked to prevent the water from leaving the area. However, the areas deserve mention in the event that one of them may be located within easy access of a stream, causing most likely color or solids problems. The items

TABLE 35

Characteristics of
Hot Coatings - Terne Plate Plant Wastes
Net Plant Raw Waste Loads

Characteristics	Plants		
	OO-2	PP-2	
		Rinses	Fume Hood
Flow, l/KKg	2,152	4,116	5,946
Suspended Solids, mg/l	48	40	9
Oil and Grease, mg/l	73	5	0
Lead, mg/l	0.20	<0.05	<0.05
Tin, mg/l	2.0	<2	<2

included in this category are generally associated with the coke, iron, and steelmaking operations as follows:

1. Ingot Casting
2. Pig Casting
3. Coal Pile
4. Ore Pile
5. Stone Pile
6. Slagging

Ingot Casting

Generally, the only water usage associated with ingot casting is the spray cooling of the ingot molds in the mold preparation and cleaning area. The hot molds are sprayed with water to cool them, and at the same time knock off minor amounts of scale adhering to the mold surfaces. The majority of the water used is evaporated upon contacting the hot mold. Any excess spray water, which is usually very minor, falls to the ground, where it generally evaporates or permeates into the ground. Since this water is generally good quality mill water containing relatively heavy fractions of scale, which collects on the surface of the ground, its permeation into the ground cannot be considered a source of pollution.

The excess spray water contacting the ground is generally so minor that there is rarely, if ever, sufficient volume to cause an overland runoff from the area. If a runoff problem were to exist from excessive spraying of the molds, any potential pollution problems, which would be confined to suspended scale particles, could be better resolved by tightening up on spray water usage rather than by providing treatment for the runoff.

Pig Casting

The lime wash used to coat the molds may create a housekeeping problem around the pig machine. Small volumes of water are used to wash down the area and to clean the spray equipment. Water is also required to cool the pigs. This water also washes off the surplus lime from the molds.

As in the case of ingot casting, excess spray water is so minimal that there is rarely sufficient volume to run off from an area. Excess spray water falls to the ground where it either evaporates or permeates into the ground. Since lime is used as a mold release agent in the pig casting process, this minor excess water may be slightly alkaline. However, the excess water is of such small volume and

alkalinity so slight, that the pollution potential of this stream is negligible.

Some plants may divert this runoff to a small basin which is periodically cleaned out. However, due to the small volume of water and the intermittent nature of the pig operation, there is no overflow from this pit. Where significant runoffs occur, they could best be handled by tightening up on spray water usage.

Raw Material Storage Piles

Large quantities of raw materials are required to operate blast furnaces and integrated steel mills. As a general rule, a minimum of six months supply is kept on hand at all times. This will vary according to the plant location and the source of the raw material. Huge piles of coal, iron ore, and limestone will be observed next to the coke plant and blast furnaces. The raw materials to operate these plants are taken from these piles.

Coal Pile

Coal is delivered to the plant by barge, rail or truck. The newly-delivered coal is scattered uniformly on the coal pile and is compacted by running a bulldozer over the freshly stored coal. This is done to reduce the amount of air trapped in the coal pile to prevent spontaneous combustion from taking place and igniting the coal pile. In some instances, a sealant is used on the exposed coal to minimize windage losses from the storage pile.

These storage piles are generally at grade level. However, some mills utilize concrete pits for raw material storage. Sewers are never intentionally located in these storage yards due to the problem of keeping them open. As a result, storm water tends to collect in pools at the base of the pile and under extreme drainage conditions, will overflow and seek the nearest sewer. As a rule, this water percolates through the storage pile into the ground and there is not normally a visible runoff.

Coal storage piles at large steel mills are generally located near a waterway adjacent to the wharf or dock where the coal is unloaded. These piles vary in size, depending upon the capacity of the blast furnace facilities, which determines the load on the by-product coke ovens and the amount of reserve supply kept on hand.

Because of the proximity of the coal storage piles to the waterway, rainfall runoff from these piles may discharge to the river. In addition, rainfall permeating through the pile may percolate into the ground and eventually seep back into the waterway.

Depending upon exposed surface area, rainfall intensity and duration, runoff or permeability coefficients, and the quality of the coal, the quantity and character of the runoff and seepage discharges may vary considerably.

Generally, however, direct pile runoff during periods of heavy rainfall would be contaminated with suspended coal particles, with associated color and turbidity. Indirect pile runoff, that runoff that seeps through the pile and lags the surface runoff, may be more highly contaminated. As the rainfall seeps through the pile, it is in extended contact with the coal. This seepage will generally collect at the bottom of the pile and will either provide a residual surface runoff that continues after the rainfall has ceased, or seep into the ground.

Because of the extended contact of this rainwater with the coal, it may pick up significant contamination within the pile from leaching or chemical reactions that may occur. In addition to solids, this seepage may pick up heavy metals or other dissolvable components within the coal. In addition, if the particular coal stored contains significant fractions of iron pyrites, the seepage will become fairly acidic from exothermic wet and dry oxidation reactions that occur with these pyrites in the pile. These reactions are equivalent to those that produce acid mine drainage from coal mines.

Samples taken of coal pile runoff from the base of a coal pile after rainfall had ceased at an actual plant site (Plant C) contained, among other things, the following constitutents in significant quantities.

Constituent	Concentration (mg/l)
Suspended Solids	412
BOD_5	15
Dissolved Solids	1413
Sulfate	592
Cyanide	3.23
COD	1995
pH	7.6

The high COD value measured from this sample is probably due to the high concentration of suspended coal fines. The BOD_5

does not correlate with the COD in magnitude since the BOD_5 test would not produce any significant biochemical reaction with the suspended coal.

Because of the limited sampling that was possible during the study, it is not practical to specifically characterize all of the constituents that might appear in the runoff. Also, these constituents would vary depending upon the factors discussed above.

Iron Ore and Limestone

Iron ore and limestone are generally delivered by rail and truck. The newly-delivered material is scattered across the top of the storage pile to provide uniform mixing with the materials already in the pile. These piles are at grade level or in concrete pits and no intentional effort is made to sewer the area. Normal storm runoff will accumulate at the base of the pile and percolate into the ground water table. There is normally no visible runoff into the local sewer.

Ore Pile Runoff

Based upon the character of ores in general, the predominant constituent of contaminated runoff from an ore pile would be suspended solids, consisting mainly of iron oxides and silica. As in the case of coal piles, the quality and quantity of these runoffs and the presence of other constituents would depend on the many variable factors outlined above.

Stone Pile Runoff

However, it might be expected that runoff from these piles would contain primarily suspended solids in the form of calcium carbonate and some alkalinity. Again, their quality and quantity would depend on variable factors previously outlined.

Slagging

For all of the steelmaking processes and the ironmaking operation, slag is always generated. The molten slag is usually deposited into ladles from the furnaces. These ladles are transported to a slag dump where the slag is allowed to air cool or is sprayed with water. The slag is then transported to a slag processing plant where the steel scrap is reclaimed and the slag crushed into a saleable product. The waste products from this process are generally

airborne dust and become waterborne when wet dust collecting systems are added. When open hearth slag is wetted, hydrogen sulfide will be emitted due to sulfur content of slag.

Hot blast furnace slag is usually dumped into a large pit, open at one end, to enable removal after quenching and quenched and cooled to a temperature at which it can be transported relatively safely to a final disposal site or a slag processing plant.

During quenching of the slag, there is little or no actual runoff from the site, the great majority of the water being evaporated. As the slag temperature is lowered, however, some excess quench water will remain unevaporated. The quench pits are normally graded so that this excess water will collect in the bottom of the pit rather than run off overland from the site. Once the cooled slag is removed for final disposal, the pooled water laying in the bottom of the quench pit will remain and be flashed off by the next hot slag charge.

However, during this period of slag cooling, some of the excess quench water may permeate into the ground, thus constituting a subsurface discharge.

Samples of pooled quench water after contact with the slag indicate that this is a highly alkaline (1,067 mg/l M.O. Alkalinity) wastewater, low in suspended matter, but high in dissolved solids probably in the form of calcium and magnesium sulfate, sulfide, and sulfites (890 mg/l sulfate, 499 mg/l sulfide and 1,560 mg/l sulfite). The main source of the alkalinity is probably calcium carbonate leached out of the slag.

Although the actual amounts of undesirable contaminants permeating into the ground is highly variable, depending upon the amount of excess quench water used, the time of contact between slag and pooled water and the general soil permeability at the quench site, certain conditions might produce undesirable subsurface discharges.

These potentially undesirable discharges could be eliminated if these quench pits were to have an impermeable lining such as concrete or other suitable material. Excess quench waters would then remain in the quench pit until such time as they are evaporated by the next hot slag charge. In fact, concrete-lined slag pits do exist at some plants where the slag quench station is in the immediate vicinity of the blast furnace. This is done in order to prevent soil

removal during quench pit cleaning and possible weakening of the blast furnace foundation.

MAINTENANCE DEPARTMENT WASTES

The maintenance required to keep a large steel mill in operation can at times generate large quantities of liquid wastes which through improper handling can adversely affect the plant effluent quality. A majority of these are oily wastes resulting from changing gear box and crankcase oils, solvent cleaners used to clean parts and equipment, paint thinners and cleaners, and cutting oils. In addition, truck and locomotive repair shops are another source of wastewaters containing oil and solids. These operations are widely spread throughout the mill and a central disposal system is seldom practical.

The volume of these wastes varies from less than a gallon to several thousand gallons at any one source. They may be disposed of on a random basis as generated at a frequency from daily to less than once a year. It is impossible, therefore, to estimate or predict these liquid waste loads generated by the plant maintenance department.

Small quantities of oily wastes are generally disposed of at the source by draining into the nearest available sewer or spreading over the yard area for local dust control. This method may create problems if this oil is discharged into nonprocess sewers where no treatment is provided.

Large quantities of oily wastes (gear box and hydraulic) are collected in drums for sale to a scavenger or are reused elsewhere in the mill for dust control or fuel oil. In areas where there is a large concentration of oil storage and use, oil sumps and collection tanks are installed. The waste oil is recovered or sold, and any water associated with the oil is metered into an oil treatment system prior to being discharged.

The major constant source of this type of waste is cutting oil from the roll shop. All rolls used in the shaping of the steel are faced to exact shapes and tolerances. The rolls are used and refaced as required to produce the specified sizes and shapes of steel. The cutting oil drains from the rolls and metal chips during handling and storage. In the newer mills, the cutting oils are filtered and reused; however, there is still drainage from the disposal of the oil saturated chips. The older mills use a once-through cutting oil. Spent cutting oil and shop drainage are collected in an oil sump. In the newer mills this waste

oil is pumped from this sump to an oil treatment or recovery plant. In the older mills this waste is sewered without treatment.

In the cold rolling mills surveyed and practicing complete recycle of the rolling solutions, tramp oil-bearing wastewater from the maintenance shop and leakage from pumps, etc., in the oil cellar averaged 2.5 l/sec (40 gal./min). This could be considerably higher in older mills. This waste was treated in a central treatment plant prior to discharge.

At truck and locomotive repair shops, wastes are generated in routine maintenance and servicing of these vehicles. This generally consists of oily wastes attributable to routine oil changes as well as floor drainage while the vehicle is being repaired. These vehicles are usually washed while in the shop and a greater volume of wastewater is generated which would again contain oil, greases, and solids. In older mills, this wastewater is discharged directly to the nearest sewer. Newer mills have installed some modest form of treatment at the shop; typically settling and oil skimming. Others may direct this small waste stream to the nearest wastewater treatment facility for main process wastewaters.

As a rule, the disposal of liquid wastes from the maintenance department can be accomplished by the continuous education of the maintenance personnel on proper disposal of oil, good housekeeping practices, and the availability of the necessary equipment to do the job. Those plants surveyed having the best housekeeping, generally had the best operating waste treatment systems.

Noncontact Cooling Water

A general schematic presenting typical water usage in a steel mill is presented on Figure 20.

Water requirements for a fully integrated steel mill average from 167,000 to 210,000 l/kkg (40,000 to 50,000 gal./ton) of steel produced. There are four classes of water use in a steel mill: (1) process water. (2) service water, (3) boiler feedwater, and (4) noncontact cooling water.

Process water is that water coming in direct contact with the product, including waters used for gas cleaning. Service water consists of the potable water system, as well as the non-potable system for general use in the mill for clean up, etc. Boiler feedwater is generally service water

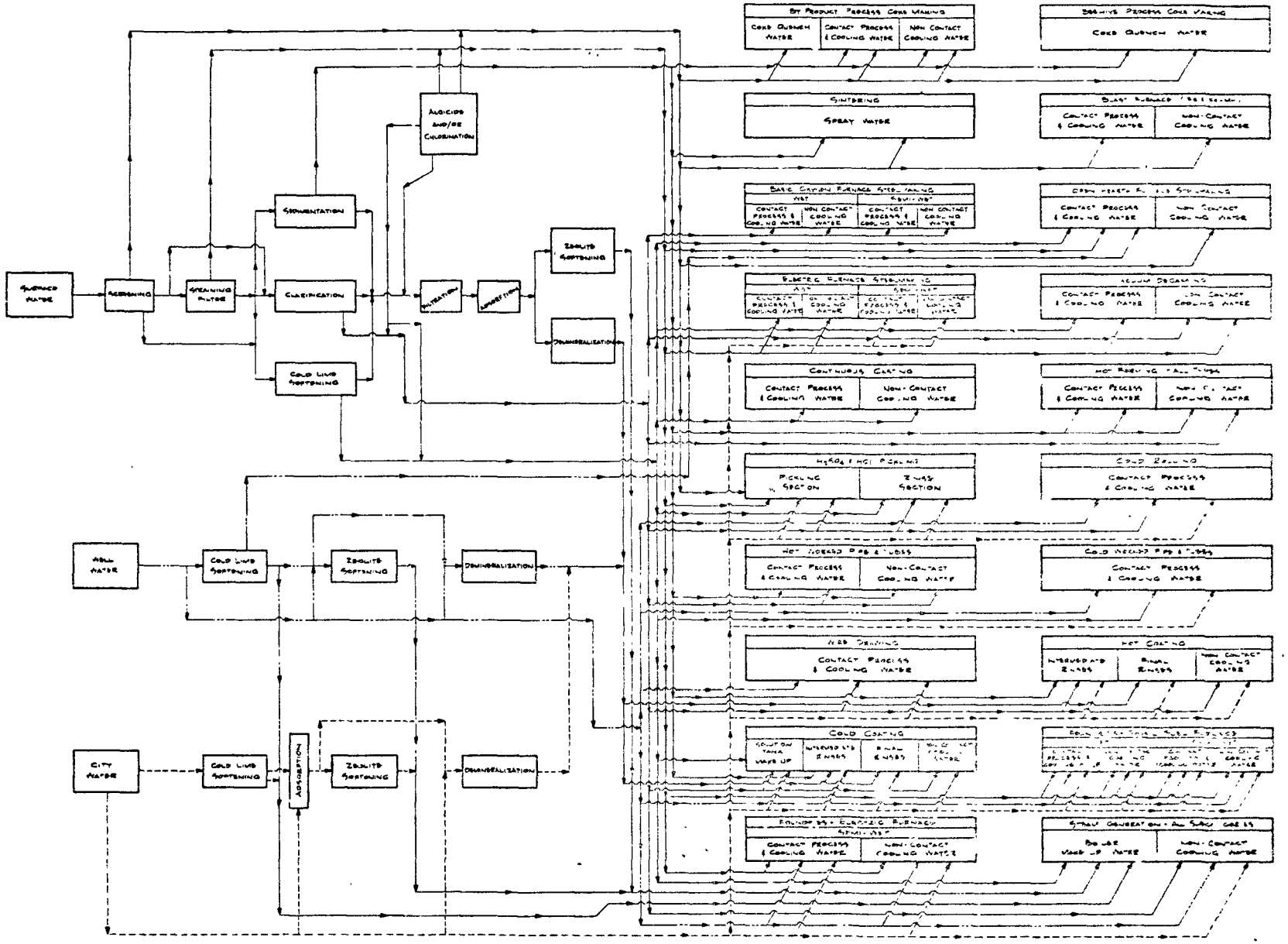

ENVIRONMENTAL PROTECTION AGENCY

STEEL INDUSTRY STUDY

TYPICAL SOURCES OF TREATMENT MAKEUP WATER TO STEEL INDUSTRY SUBCATEGORY PROCESSES

4-13-74 FIGURE 20

treated to make it suitable for boiler use. Noncontact cooling waters are those waters used for cooling purposes which do not come in contact with the product and are discharged without degradation of the initial water quality other than elevation in temperature.

Of these four water uses, process water and noncontact cooling water are the major water volumes required, each using many times the amount of water per ton of steel required for the other two uses.

As a general rule, the quality of water used for process and noncontact cooling in the steel industry is not critical. The use of traveling screens on the water intakes to remove coarse debris and the use of 3/32 in. final screens will generally provide suitable water for use in the mill. In special cases (cold rolling mills, tin plating mills, galvanizing and special coating, etc.), where silt and dissolved salts in the water would affect the product quality, additional treatment will be required to obtain the necessary water quality. No additional treatment is generally required for the noncontact cooling systems.

The industry is presently using river, lake, well, impounded, and brackish waters for noncontact cooling purpose with no major problems and with a minimum of special engineering considerations. Heavy silt loads during storm runoff can create temporary problems in special pieces of equipment, however, mills experiencing this problem have installed special cleaning systems to overcome this problem.

In order to establish the noncontact cooling water requirements for making steel, the water system of an integrated mill producing 3,000,000 ingot tons per year and practicing a high degree of recycle was reviewed. No effort was made to determine the actual quantities of water used by the individual pieces of equipment. The plant, however, did consist of the following production units: (1) coke plant, (2) blast furnace, (3) powerhouse, (4) basic oxygen shop, (5) open hearth shop, and (6) rolling and finishing mills. The noncontact cooling water requirements for these units were determined. For an average daily production of 8,219 ingot tons of steel, 168,000,000 gal./day of noncontact cooling water is used, or 20,500 gal. of noncontact cooling water is required to produce 1 ingot ton of steel. The following is a breakdown of the water usage per production unit:

	gpm/T Product	gpm/T Steel	gal./ingot T Steel

Coke Plant	5.21	2.19	3,154
Blast Furnace	3.65	2.56	3,686
Boiler and Powerhouse		3.04	4,378
Basic Oxygen Furnace		1.22	1,757
Open Hearth		1.16	1,670
Rolling and Finishing Mills		4.08	5,875
			20,520

These figures were taken from a steel plant known to have better than average water use practices, and might well represent the lower limit of the water used for these purposes.

CHARACTERIZATION AND QUANTIFICATION OF WASTES FROM WATER, STEAM, AND ELECTRIC POWER GENERATION IN INTEGRATED STEEL MILLS

INTRODUCTION

This section establishes the quality and quantity requirements of the various classes of water used in the steel industry for process water, service water, boiler makeup water, and noncontact cooling water. The quantity and type of wastes generated from the preparation and use of this water is also presented.

CLASSIFICATION OF WATER USED IN THE STEEL INDUSTRY

When dealing with water usage in the steel industry, the typical water systems used in the mill are generally described in such broad terms as "mill water system," "service water system," "process water system," "cooling water system," etc. The actual quality of the water in each of these systems can vary from plant to plant, depending upon the availability and quality of the raw water supply, the age of the facility, equipment design and age considerations, pollution control requirements, and general plant and company policy on water use and reuse practices.

This diversity of quality in water use is recognized by the industry itself. Although various articles are written on general water quality requirements in the industry, these requirements are described in broadly qualitative terms, and not by strictly defined specifications achievable by specific water treatment processes.

This wide diversity in water use and quality practices is in part a result of the historical development of the industry. Early in the 1900's when many of today's existing large integrated steel complexes were first built, one of the major criteria for selection of a plant site was the availability of relatively unlimited quantities of water of sufficient quality to require little or no treatment before use. Since neither historical nor environmental considerations at that time dictated the practice of water reuse, the less complicated and more expedient practice of once-through use was established. Obviously, with once-through use of water as the rule of operation, raw water quality had to be very close to that needed in the mill, since any substantial treatment of that large a quantity of water would prove uneconomical.

Equipment failure problems, such as "burn-out" of cooling plates and stove valve discs at critical cooling areas of blast furnaces, etc., were condoned, and their repair was part of the normal maintenance routine in the plant. In fact, cooling side equipment design probably centered more around accommodating the existing quality of water than obtaining optimum cooling efficiency.

As the steel industry progressed into this century, however, these practices began to change, slowly at first, but at a continually accelerating pace. As older mills are phased out and newer mills put on line, this change in water use practice will become much more evident.

The move to increased treatment and reuse of water in steel plants was dependent on several factors. With increased environmental pressure, an effort was made to improve aqueous discharges, including those discharges from wet scrubbing systems that were installed to clean airborne emissions. The industry began to find, and continues to realize that higher quality makeup to a recirculating system, with treatment in the recirculation system, provides for more economical usage than a once-through system using larger volumes of lower quality water, but requiring treatment of the entire waste stream before discharge. The recirculating systems on the other hand can be run at a lower water quality with treatment of only a small volume of blowdown before discharge.

Another factor was the more sophisticated design of mill equipment, requiring higher quality water to maintain peak efficiency and prevent equipment failures. Process equipment downtime is now less acceptable than in the past, because higher productivity is required to maintain

profitability due to the large investment in production equipment.

Another factor, in some geographic areas, was the discovery that an adequate water supply of the proper quality to meet expanded production needs was not available. Thus, lower quality waters had to be upgraded to provide the proper quality requirements. This in turn led to the use of recirculation systems to minimize the quantity of treated makeup required.

The development of more sophisticated coating processes that yield a high quality product required high quality contact water supplies in the process. Rather than use this water only once and throw it away, many plants use it in a cascade pattern until its quality is spent, or recycle and regenerate it for reuse.

The following discussion will describe the more or less "typical" variety of makeup water quality used in the industry on a subcategory basis. This discussion is summarized in schematic form in Figure 20.

By-Product Coke Making

Coke quench water - Plants generally use fresh river water after coarse screening as makeup to recirculating system. Plants may also use by-product coke plant wastewaters, but this is usually not acceptable from an air pollution standpoint.

Contact and noncontact cooling waters - Makeup generally consists of fresh river water after screening and, if necessary, plain sedimentation.

Beehive Coke Making

Quench water - Makeup to recirculating quench water system is generally fresh river water after screening and, if necessary, plain sedimentation.

Burden Preparation - Sintering

Sinter spray water - Makeup is generally fresh river water after screening and plain sedimentation.

Iron Making - Fe and Fe-Mn Blast Furnaces

Contact process and cooling water - Makeup to recirculating system is generally fresh river water after coarse screening.

Noncontact cooling water - Generally once-through fresh river water after coarse screening.

Steelmaking - Basic Oxygen Furnace - Wet and Semi-Wet

Contact process and cooling water and noncontact cooling water - Makeup to recirculating systems is generally fresh river water which has been coarse screened, strain filtered, or clarified. Noncontact water may also have chlorine or algicide added, if tight recycle systems are used.

Steelmaking - Open Hearth Furnace

Contact process and cooling waters - Makeup to recirculating system is generally fresh river water which has been coarse screened, strain filtered, and sometimes cold-lime softened.

Noncontact cooling water - Makeup is generally once-through fresh river water that has been coarse screened. It may also be coarse screened fresh river water makeup to recirculating system with algicide added.

Steelmaking - Electric Furnace

Semi-Wet. Contact process and cooling water and noncontact cooling water - Makeup to recirculating system is generally fresh city water that has been used as once-through noncontact transformer cooling water.

Wet. Contact process and cooling waters - Makeup to recirculating system is generally fresh river water that has been coarse screened and strain filtered.

Noncontact cooling water - Makeup is either once-through fresh river water that has been coarse screened and strain filtered, or fresh river water makeup to recirculating system that has been coarse screened, strain filtered, and treated with algicide.

Vacuum Degassing

Contact process and cooling water - Fresh river water makeup to once-through systems is coarse screened and strain filtered. Cold lime softening is also used on makeups to recirculating systems.

Noncontact cooling water - Makeup to recirculating system is generally fresh river water that has been coarse screened, strain filtered or clarified, and chlorinated or treated with algicide.

Continuous Casting

Contact process and cooling water and noncontact cooling water - Makeup to recirculating system with fresh river water that has been coarse screened, strain filtered, and cold lime softened.

Hot Forming - All Types

Contact process and cooling water and noncontact cooling water - Makeup to recirculating or once-through system generally will be fresh river water that has been coarse screened and treated by plain sedimentation or clarification.

Sulfuric Acid and Hydrochloric Acid Pickling

Pickling Section. Pickling section makeup water may vary widely in quality, depending upon the age of the pickling installation and the product grade pickled. Generally, pickling section makeup water may be fresh river water that has been coarse screened, or coarse screened and strain filtered, or coarse screened and clarified. It may also be fresh city water.

Rinsing Section. Again makeup water quality varies with the age of the operation and the product produced. In general, however, makeup water will be fresh river water that has been screened and clarified, or screened and cold-lime softened, or it may be a fresh city water makeup.

Cold Rolling

Contact process and cooling water - Fresh makeup water to a recirculating system is usually city water, or good quality well water, or fresh river water that is screened and clarified.

Pipe and Tubes

Hot Worked. Contact process and cooling water and noncontact cooling water - Makeup to recirculating or once-through system will generally be fresh river water that has been coarse screened and treated by plain sedimentation or clarification.

Cold Worked. Contact process and cooling water - Makeup to recirculating system may be city water, high quality well water, or river water that has been screened and cold-lime softened.

Wire Making

Contact process and cooling water - Makeup to recirculating system may be city water, high quality well water, or screened and clarified river water.

Coatings

Hot Coating. Intermediate rinses - Makeup to a once-through system may be city water or river water that has been screened and settled or screened and clarified.

Final rinses - Makeup to a once-through or recirculating system may be city water or river water that has been screened, clarified or cold-lime softened, and demineralized.

Noncontact cooling water - Makeup to a once-through system may be city water or river water that has been screened and clarified.

Cold Coating. Solution tanks makeup - Makeup is generally city water or river water that has been screened and clarified, or screened and cold-lime softened.

Intermediate rinses - Makeup to a once-through system may be city water or river water that has been screened and settled by plain sedimentation, or screened and clarified.

Final rinses - Makeup to once-through or recirculating system may be city water or river water that has been screened, clarified or cold-lime softened, and demineralized.

Noncontact cooling water - Makeup to a once-through system may be city water or river water that has been screened and clarified.

QUANTITY AND QUALITY OF TREATED WATER REQUIRED IN THE STEEL INDUSTRY

Quantity Requirements

In the previous section it was shown how varied the water usage is in the steel industry relative to type of treatment

TABLE 40

INDUSTRY GROUP	WATER INTAKE (BILLION GALLONS)										
	Total	TREATED PRIOR TO USE BY TYPE OF TREATMENT									
		Total	Aeration	Coagulation	Filtration	Softening	Ion Exchange	Corrosion Control	pH	Settling	Other
PRIMARY METAL INDUSTRIES	5004.7	970.9	16.8	88.1	99.6	73.9	22.1	114.9	158.9	240.0	550.9
BLAST FURNACE, BASIC STEEL PROD.	4391.6	919.5	15.6	65.1	79.8	64.8	19.7	105.2	142.7	227.3	547.8
BLAST FURNACES AND STEEL MILLS	4070.7	915.5	15.4	64.6	78.2	64.0	19.6	104.3	141.3	226.3	547.6
ELECTROMETALLURGICAL PRODUCTS	298.2	0.9	-	0.5	0.4	0.1	-	0.4	-	-	-
STEEL WIRE AND RELATED PRODUCTS	7.1	0.5	-	-	-	0.2	0.2	0.1	(2)	-	-
COLD FINISHING OF STEEL SHAPES	8.3	2.0	-	-	0.6	0.4	-	0.1	1.0	-	-
STEEL PIPE AND TUBES	7.3	0.6	-	-	-	0.1	-	-	-	-	-

performed. It was shown that it was necessary to classify water usage by treatment received rather than by industry subcategory, because of the great number of combinations and permutations of water use that are practiced.

A similar case presents itself relative to treated water quantity requirements. As evidenced by the efforts to establish effluent limits guidelines for the steel industry, the amount of process water discharged, even among individual subcategories may vary widely. Water use (and thus water makeup) may vary from systems that use water on a oncethrough basis to systems whose only makeup is to replenish in-process evaporation.

Thus, because of the variations in types of treated water used and the quantity used, on a subcategory basis, no general quantitative estimate of type and amount of treated water used on a subcategory basis can be provided.

However, a quantitative estimate of treated water usage by type of treatment is available on an industry-wide basis from the 1967 Census of Manufacturers. Subject data is from the year 1968 and is summarized below:

Quality Requirements

For the purposes of this section, the quality requirements are based upon the treatment received, since specific raw water treatment processes generally provide fairly specific water qualities, depending upon the process.

Coarse Screening. Coarse screening is employed to remove general debris from the water source at the intake. This includes twigs, fish, cans, bottles, etc., anything that if admitted into the plant system would create gross blockages of pump impellers, cooling loops, piping, etc.

Although definitions of coarse screen size are imprecise, coarse screens usually have 1/4 in. openings or larger.

Strainers or Straining Filters. Strainers are still basically screening devices, although of finer size. Their function is still to remove relatively gross sizes of particulates from the incoming water. Screen size is generally 1/4 in. or less, with many applications going into fine mesh sizes.

This equipment is capable of removing grit-sized materials and other debris which, if introduced into the plant water

system, might cause buildups in areas of poor flow streamline and cause eventual blockages.

Sedimentation. Plain sedimentation usually involves the introduction of the water to be treated into a large basin or tank to reduce the velocity of flow to a point where sediment and other suspended matter may settle out by the force of gravity.

For a sedimentation unit to operate properly, the horizontal velocity must be minimized and the detention time maximized such that the sediment has sufficient time to settle to the bottom and not be subjected to scour once it has settled. Practical limits to the optimization of the above parameters exist since overall pond size is usually limited by other factors.

In addition, a properly designed sedimentation unit must have good inflow distribution and outflow collection principles incorporated into its design to prevent excessive turbulence and resuspension of materials in these critical areas.

Generally, a properly designed sedimentation unit can produce a treated water containing 50-100 mg/l suspended matter, depending upon the relative fineness of matter to be removed.

Clarification. In the steel industry, clarification usually involves introduction of the raw water into a circular unit with a bottom shaped like an inverted cone. The water is introduced near the bottom of the cone and allowed to rise in an upflow pattern through the unit. The change in cross-sectional area as the water rises reduces its upflow velocity to a point where solids begin to settle. As the solids settle, they are contacted with other solids in the upflow water, agglomerate or coalesce, and thus experience enhanced settling.

The net effect is the formation of a fluid blanket or bed through which raw water must pass. As the water passes through the bed, further solids are removed by this bed. In practice, chemicals may also be added with the wastewater to help produce this blanket or to enhance the agglomeration tendencies of the suspended matter in the raw water.

A properly designed clarifier with closely controlled addition of flocculating agents or chemicals, can produce a treated water containing 30-50 mg/l suspended solids.

Cold Lime Softening. In the steel industry, cold softening processes are used to reduce natural hardness in the incoming water supply. In this process, lime and sometimes soda ash are added to precipitate various forms of calcium and magnesium in the raw water which contribute to the total hardness. Often coagulants such as aluminum sulfate, ferrous sulfate, ferric sulfate, or sodium aluminate are also added in conjunction with the softening chemicals to aid in settling the precipitates formed.

An additional benefit from a cold lime softening operation is that it can also be used as a clarification operation to remove suspended matter, since the precipitating hardness parameters and coagulants would assist suspended solids removal.

A properly designed and operated cold lime softening and clarification operation can produce a treated water containing 30-50 mg/l suspended matter and 30-70 mg/l total hardness.

Algicide Addition or Chlorination. In the steel industry, treated water from sedimentation, clarification or cold softening operations is sometimes treated with algicides or chlorine to inhibit the growth of bacterial organisms within the plant internal piping systems.

In particular, where the water is to receive further treatment in bed-type units (filters, zeolite softeners, ion exchangers) the water is periodically shot-chlorinated to inhibit biological growth and fouling of the bed media.

The net effect of algicide or chlorine addition is to disinfect the water supply before use or further treatment.

Filtration. If the treated water from sedimentation, clarification, or cold lime softening units is intended to go on to ion exchange type treatment units, it is subjected to an intermediate filtration step, usually after chlorination.

The filtration step removes finely divided suspended matter that was not removed by the sedimentation, clarification, or cold lime softening units as well as after-precipitates that may form from cold lime softening practices. The primary function of this filter bed is to prevent the fouling of the ion exchange resin beds by residual suspended matter.

The filters usually employed have sand and gravel or anthracite coal, sand, and gravel media.

A properly designed and operated filter system of this type can produce a treated water containing less than 10 mg/l suspended matter.

Adsorption. Another treatment unit that is often used prior to ion exchange is activated carbon adsorption. This unit is designed to remove any trace organics that might be present in the water and might foul the resin beds. In addition this unit removes any residual chlorine in the water which might oxidize the resin beds.

The effluent from a carbon adsorption unit should be free of soluble organic matter and free residual chlorine.

Zeolite Softening. Zeolite softening is an ion exchange process where the ion exchange resin is usually operated on a sodium cycle basis to remove hardness producing cations from the water supply. This process is normally used to produce water for boiler makeup.

A zeolite softener can produce an effluent water containing zero total hardness.

Demineralization. Demineralization, or complete ion exchange, is used in the steel industry to produce very high quality water for high quality product operations, for example, final rinsing of coated products.

In this process, essentially all the cations and anions are removed, with some exceptions, from the water to be treated. In particular, strong acid cation resins are used to remove essentially all the cations from the water. Weak base anion resins are used where background silica and carbonate concentrations permit, to remove all but these trace cations. Where background silica and carbonate levels are unacceptably high (some well waters), a strong base resin is used.

A properly designed and operating cation-anion ion exchange system will produce a water containing essentially no cations and no anions (except for silica and carbonate for a weak base system) in the treated water supply.

QUANTITY AND QUALITY OF WASTES GENERATED FROM WATER TREATMENT OPERATIONS

Most raw water treatment operations produce wastes. Although in many cases these waste streams contain only those contaminants originally removed from the raw water supply, they also may contain other contaminants in the form

of treatment chemicals and reaction products of treatment chemicals used to aid or affect treatment operations or regenerate treatment equipment.

It is obvious, then, that the amounts of waste contaminants generated will vary according to water quality and chemical usage rate. In turn, chemical usage rate is also affected by incoming water quality.

The quality and quantity of wastes generated from water treatment operations are discussed below.

Coarse Screening

Wastes generated from this treatment process are basically the general debris that collects on the screen that is periodically backwashed. The amount of backwash water used is highly variable and not accurately known. The frequency of backwash is dictated by the general debris conditions of the intake water source, which varies over a period of time.

Because the backwashing is a simple physical removal operation, the debris in the backwash constitutes 100% of the debris removed from the intake water. Thus, for the purposes of this section, the quantity and quality of wastes generated from the backwashing of coarse screening units is as follows:

Backwash Flow, gal./100 lb debris removed - Highly Variable
pH - Ambient
Debris - 100 lb/100 lb screened

Strainers or Straining Filters

As in the case of coarse screening, the backwashing of strainers is a physical operation that removes 100% of the material collected in the strainer. Backwash flow is highly variable while the frequency of backwashing is dependent upon the debris conditions of the intake.

For the purposes of this section, the quantity and quality of wastes generated from the backwashing of strainers is as follows:

Backwash Flow, gal./100 lb debris removed - Highly Variable
pH - Ambient
Debris - 100 lb/100 lb screened

Sedimentation

The dragout or excavated wastes from a sedimentation tank or basin operations is dependent, in quantity and quality, upon the suspended matter removed across the unit and the hydraulic loading on the unit.

Thus, for the purposes of this section, the quality and quantity of wastes generated from the dragout from a sedimentation unit is as follows:

Flow $B = (S_I I - S_E E)/(S_B)$

Where;
B = Dragout rate, gpm
I = Unit influent rate, gpm
E = Unit effluent rate, gpm
S_I= Influent suspended solids concentration, mg/l
S_E= Effluent suspended solids concentration, mg/l
S_B= Dragout suspended solids concentration, wt%

pH - Ambient
Suspended Matter (S_B) - Approximately 1 wt% (or less)

Clarification

Like the sedimentation process, the underflow from a process clarifier is dependent, in quantity and quality, upon the suspended solids removal across the unit and the hydraulic loading on the unit.

Thus, for the purposes of this section, the quantity and quality of waste generated in the underflow from a water treatment clarifier is as follows:

Flow $B = (S_I I - S_E E)/(S_B)$

Where;
B = Underflow rate, gpm
I = Unit influent rate, gpm
E = Unit effluent rate, gpm
S_I= Influent suspended solids concentration, mg/l
S_E= Effluent suspended solids concentration, mg/l
S_B= Underflow suspended solids concentration, wt%

pH - Ambient
Suspended Matter (S_B) - Approximately 1 wt% (or less)

Cold Lime Softening

Since cold lime softening processes usually employ clarification to remove precipitating hardness and background suspended matter from the water supply, the quality of the underflow from this unit is dependent, in quantity and quality, on the natural suspended solids removal, and the hardness removal across the clarifier, as well as the hydraulic loading on the unit.

Thus, for the purposes of this section, the quantity and quality of wastes generated in the underflow from a cold lime softening operation is as follows:

Flow $B = \pm(S\underline{I} + H\underline{I})I - (S\underline{E} + H\underline{E})E1/(S\underline{B})$

Where;
- B = Underflow rate, gpm
- I = Unit influent rate, gpm
- E = Unit effluent rate, gpm
- $S\underline{I}$= Influent suspended solids concentration, mg/l
- $H\underline{I}$= Influent total hardness concentration, mg/l as $CaCO\underline{3}$
- $S\underline{E}$= Effluent suspended solids concentration, mg/l
- $H\underline{E}$= Effluent total hardness concentration, mg/l as $CaCO\underline{3}$
- $S\underline{B}$= Underflow suspended solids concentration, wt%

pH - 10-11
Suspended Matter ($S\underline{B}$) - Approximately 1 wt% (or less)
Total Hardness ($H\underline{E}$) - 30-70 mg/l as $CaCO\underline{3}$

Algicide Addition or Chlorination

There are no wastewaters associated either with the algicide addition or chlorination water treatment operations.

Filtration

Filtration, like sedimentation or clarification, is a suspended solids removal process whose wastes, on a quantity and quality basis are dependent upon the solids removal across the unit and the hydraulic loading on the unit. Although the backwash rate on a filtration unit is generally fixed by the filter media, the duration and frequency of backwash cycles are dependent upon the previously mentioned parameters.

Therefore, for the purposes of this section, the quantity and quality of wastes generated in the backwash of a filtration unit is as follows:

Flow. Approximately 15-20 gpm/sq ft of bed area, for a length of time sufficient to restore the bed for service.

pH - Ambient
Suspended Solids - $S_B = (S_I I - S_E E)/(B)$

Where;
I = Unit influent rate, gal./cycle
E = Unit effluent rate, gal./cycle
B = Unit backwash rate, gal./cycle
S_I= Influent suspended solids concentration, mg/l
S_E= Effluent suspended Solids concentration, mg/l
S_B= Backwash average suspended solids concentration, mg/l

Adsorption

As a treatment unit in the steel industry, a carbon adsorption unit, on a theoretical basis, should not be a source of aqueous wastewater discharges. Unless the unit is being used to remove large amounts of organic matter, the system is used more as a polisher. Thus, bed life is on the order of 2-5 years, depending upon operating conditions. At this time, the bed is usually removed and replaced with a new bed.

However, on a practical basis, the carbon bed must be backwashed on a periodic basis to loosen and reclassify the bed and also to remove suspended solids leakage and cold softening after-precipitates which were not removed by previous treatment units. Thus, in this sense, the carbon adsorption unit operates as a filtration system and the quantity and quality of the wastes generated is dependent upon the suspended solids removal across the unit and the hydraulic loading on the unit.

Thus, for the purposes of this section, the quantity and quality of wastes generated in the backwash of a carbon adsorption unit is as follows:

Flow. As specified by carbon bed supplies, flow will be specified in gpm/sq ft of bed area. Duration of backwash will be as necessary to restore the bed for service.

pH - Ambient

Suspended Solids - $S_B = (S_I I - S_E E)/(B)$

Where;
I = Unit influent rate, gal./cycle
E = Unit effluent rate, gal./cycle
B = Unit backwash rate, gal./cycle
S_I = Influent suspended solids concentration, mg/l
S_E = Effluent suspended solids concentration, mg/l
S_B = Backwash average suspended solids concentration, mg/l

Zeolite Softening

Since zeolite softening units are used to remove hardness producing cations from a water supply, the waste generated during the regeneration of these units will contain, ideally, all the hardness producing cations removed during the service cycle. These wastes will also contain excess sodium chloride used in the regeneration of the unit.

Thus, the quantity and quality of wastes generated and dependent upon the hardness removal across the unit and the hydraulic loading on the unit. Although the flow rates at the various stages of regeneration and the regenerant concentration are fixed by the resin specification, the duration and frequency of the regeneration cycles and the quantity of regenerant required are dependent upon the previously mentioned parameters.

Therefore, for the purposes of this section, the quantity and quality of wastes generated during the regeneration of a zeolite softener is as follows:

Flow. Approximately 1-1.5 gpm/cu ft during regeneration or rinse cycle, or 4-8 gpm/sq ft during backwash, for a length of time sufficient to meet resin regeneration specifications.

pH - Ambient
Total Hardness - $H_R = (H_I I - H_E E)/(R)$

Where;
R = Regenerant flow rate, gal./cycle
I = Unit influent rate, gal./cycle
E = Unit effluent rate, gal./cycle
H_R= Regenerant total hardness concentration, mg/l as $CaCO_3$
H_I= Influent total hardness concentration, mg/l as $CaCO_3$
H_E= Effluent total hardness

concentration, mg/l as $CaCO_3$

The above characterization of the wastes from a zeolite softener regeneration excludes an estimate for residual sodium chloride in the wastewater. This value is variable, depending upon capacity desired condition of the resin and general operating conditions.

Demineralization

Cation Units. Since cation ion exchange units are used to remove cations from a water supply, the wastes generated during the regeneration of these units will contain, ideally, all the cations removed during the service cycle. These wastes will also contain excess acid used in the regeneration of the unit.

Thus, the quantity and quality of wastes generated is dependent upon the cation removal across the unit and the hydraulic load on the unit. Cation removal will be affected by the type of ion exchange resin used.

Although the flow rates at the various stages of regeneration and the regenerant concentration are fixed by the resin specifications, the duration and frequency of the regeneration cycle, and the total quantity of regenerants required are dependent upon the previously mentioned parameters.

Therefore, for the purposes of this section, the quantity and quality of wastes generated during the regeneration of a cation ion exchange unit is as follows:

Flow. Approximately 0.5-1.5 gpm/cu ft during regeneration or rinse cycle, or 4-8 gpm/sq ft during backwash, for a period of time sufficient to meet resin regeneration specifications.

pH - less than 6.0
Total Cations - $C_R = (C_I I - C_E E)/(R)$

Where;
R = Regenerant flow rate, gal./cycle
I = Unit influent rate, gal./cycle
E = Unit effluent rate, gal./cycle
C_R= Regenerant total cation concentration, mg/l as $CaCO_3$
C_I= Influent total cation concentration, mg/l as $CaCO_3$
C_E= Effluent total cation

concentration, mg/l as $CaCO_3$

The above characterization of the wastes from a cation ion exchange unit regeneration excludes an estimate of residual excess regenerant acid in the wastewater. This value will depend upon the type of acid used (H_2SO_4 or HCl), the capacity required, the condition of the resin, and general operating conditions.

Anion Units. Since anion ion exchange units are used to remove all anions from a water supply, the wastes generated during the regeneration of these units will contain, ideally, all the anions removed during the service cycle. These wastes will also contain excess caustic used in the regeneration of the unit.

Thus, the quantity and quality of wastes generated is dependent upon the anion removal across the unit and the hydraulic load on the unit. Anion removal across the unit will be affected by the type of ion exchange resin used.

Although the flow rates at the various stages of regeneration are fixed by the resin specifications, the frequency and duration of the regeneration cycle and the total quantity of regenerants required are dependent upon the previously mentioned parameters.

Therefore, for the purposes of this section, the quantity and quality of wastes generated during the regeneration of an anion ion exchange unit is as follows:

Flow. Approximately 0.5-1.5 gpm/cu ft during regeneration or rinse cycles, or 3 gpm/sq ft during backwash for a period of time sufficient to meet resin regeneration specifications.

pH - greater than 9.0
Total Anions - $A_R = (A_I I - A_E E)/(R)$

Where;
R = Regenerant flow rate, gal./cycle
I = Unit influent rate, gal./cycle
E = Unit effluent rate, gal./cycle
A_R= Regenerant total anion concentration, mg/l as $CaCO_3$
A_I= Influent total anion concentration, mg/l as $CaCO_3$
A_E= Effluent total anion concentration, mg/l as $CaCO_3$

The above characterization of the wastes from an anion ion exchange unit regeneration excludes an estimate of residual excess sodium hydroxide regenerant in the wastewater. This value will depend upon the capacity required, the condition of the resin, and general operating conditions.

SECTION VI

SELECTION OF POLLUTANT PARAMETERS

INTRODUCTION

The selection of the control parameters was accomplished by a three step process. First, a broad list of pollutant parameters to be evaluated was established. Second, the list of anticipated control parameters and procedures for analyses of these critical parameters was established. Thirdly, the data from the field sampling program was examined in detail to establish the need to deviate from the anticipated list, based on the field experience.

BROAD LIST OF POLLUTANTS

Prior to the initiation of the plant visiting and sampling phase of the study it was necessary to establish the list of pollutant parameters that was to be analyzed for each type of waste source. These parameters were selected primarily on the basis of a knowledge of the materials used or generated in the operations, and on the basis of pollutants known to be present as indicated by previously reported analyses. The purpose of the broad list was to identify those pollutants present in a significant amount but not normally reported or known to be present to such an extent. The parameters that may be present in steel industry wastewater streams are presented in table form by operations as follows:

Table 41 - Hot Forming Operations
Table 42 - Pipe and Tube Operations
Table 43 - Pickling Operations
Table 44 - Cold Rolling Operations
Table 45 - Hot Coating - Galvanizing Operations
Table 46 - Hot Coating - Terne Plating Operations
Table 47 - Cold Coating - Chrome and Tin-Plating Operations

RATIONALE FOR SELECTION OF CONTROL PARAMETERS

On the basis of prior analyses and experience, the major wastewater parameters that are generally considered of pollutional significance for the hot forming and cold finishing operations of the iron and steel industry include suspended solids, oil and grease, iron, total and hexavalent chromium, tin, lead, and zinc. Other parameters are present in significant amounts but were not established as control

TABLE 41

HOT FORMING OPERATION
PARAMETERS

Acidity (Free and Total)
Alkalinity (Pht. and M.O.)
BOD_5
Chloride
COD
Dissolved Solids
*Flow
Hardness, Total
Heat
Iron, Total
Mercury
Nitrate
*Oil and Grease
*pH
Phosphorus, Total
Sulfate
*Suspended Solids
Total Solids

TABLE 42

PIPE AND TUBE OPERATION
PARAMETERS

Acidity (Free and Total)
Alkalinity (Pht. and M.O.)
BOD_5
Chloride
COD
Color
Dissolved Solids
*Flow
Heat
Iron, Total
Mercury
*Oil and Grease
*pH
Sulfate
*Suspended Solids
Total Solids

TABLE 43

PICKLING OPERATION
PARAMETERS

Acidity (Free and Total)
Alkalinity (Pht. and M.O.)
BOD_5
Chloride
COD
Color
Dissolved Solids
*Flow
Heat
*Iron, Dissolved
Iron, Ferrous
Iron, Total
Lead
Mercury
*Oil and Grease
*pH
Phosphorous, Ortho
Phosphorous, Total
Silica
Sulfate
Sulfide
*Suspended Solids
TOC
Total Solids
Turbidity

TABLE 44

COLD ROLLING OPERATION
PARAMETERS

Acidity (Free and Total)
Alkalinity (Pht. and M.O.)
BOD_5
Chloride
COD
Color
Dissolved Solids
*Flow
Heat
*Iron, Total
Mercury
*Oil and Grease
*pH
Phosphate, Total
Phosphate, Ortho
Sulfate
Surfactant (ABS)
*Suspended Solids
Total Solids
Turbidity

TABLE 45

HOT COATING - GALVANIZING OPERATION
PARAMETERS

Acidity (Free and Total)
Alkalinity (Pht. and M.O.)
Ammonia
BOD_5
COD
Chloride
*Chromium, Hexavalent
*Chromium, Total
Color
Copper
Cyanide, Free and Total
Dissolved Matter
*Flow
Fluoride
Heat
Iron, Dissolved
Iron, Total
Lead
Mercury
Nickel
Nitrate
Nitrogen
*pH
Phosphate, Ortho and Total
Solvent Extract Matter
Sulfate
Sulfide
*Suspended Matter
Tin
TOC
Total Matter
Turbidity (J.T.U.)
*Zinc

TABLE 46

HOT COATING - TERNE PLATING OPERATION
PARAMETERS

Acidity (Free and Total)
Alkalinity (Pht. and M.O.)
Ammonia
BOD
COD
Chloride
Chromium, Hexavalent
Chromium, Total
Color
Copper
Dissolved Matter
*Flow
Heat
Iron, Dissolved
Iron, Total
*Lead
Mercury
Nickel
Nitrate
Nitrogen
*pH
Phosphate, Ortho
Phosphate, Total
Solvent Extract Matter
Sulfate
Sulfide
*Suspended Matter
TOC
Total Matter
*Tin
Turbidity (J.T.U.)
Zinc

TABLE 47

COLD COATING - CHROME AND TIN PLATING OPERATIONS
PARAMETERS

Acidity (Free and Total)
Alkalinity (Pht. and M.O.)
Ammonia
BOD
COD
Chloride
*Chromium, Hexavalent
*Chromium, Total
Color
Copper
*Cyanide, Free and Total
Dissolved Matter
*Flow
Fluoride
Heat
Iron, Dissolved
Iron, Total
Lead
Mercury
Nickel
Nitrate
Nitrogen
*pH
Phosphate, Ortho and Total
Solvent Extract Matter
Sulfate
Sulfide
*Suspended Matter
*Tin
TOC
Total Matter
Turbidity (J.T.U.)
Zinc

parameters because their presence in the effluent is not as significant, and the cost of treatment and technology for removal in these operations is considered to be beyond the scope of best practicable or best available technology at this time. In addition, some parameters cannot be designated as control parameters until sufficient data is made available on which to base effluent limitations or until sufficient data on treatment capabilities is developed.

Standard raw waste loads and guidelines are developed only on the critical parameters which were starred in the tables. Multiple analyses of these anticipated control parameters were provided for to give added accuracy to the data.

SELECTION OF CRITICAL PARAMETERS BY OPERATION

The rationale for selection of the major waste parameters is given below.

Hot Forming - Pipe and Tube Operations

Wastewaters from hot forming and pipe and tube operations result from washing scale from the surface of the steel with water, and in the water used to transport the scale through the flume beneath the mill line; the water used to cool the rolled product becomes part of the mill effluent. The effluents from hot mills contain suspended particles of scale and oils which originate in the hydraulic and lubricating systems. The scale particles range from large pieces to submicron sizes, depending upon the hot forming operation, and are mixtures of the various iron oxides. The oils in such effluents are only slightly water-miscible and appear as flotant oil.

Cold Rolling Operations

Effluents from cold rolling operations contain emulsified oils and suspended solids resulting from stable oil emulsions utilized in the cold rolling and reduction process.

Pickling Operations

Spent pickling solutions and acid rinse waters represent by far the most significant source of these wastes. Spent pickling solutions from continuous strip picklers contain 5% to 9% free acid and 10% to 16% iron salts; from batch operations, such solutions contain 0.5% to 2.0% free acid and 15% to 22% iron salts. Approximately 10-15% of the acid used in pickling is discharged in the rinse waters as highly diluted free acid and iron salts. Hydrochloric and sulfuric

acids are the most widely used pickling acids for carbon steel.

Hot Coating Operations

Wastewater effluents from these processes result from rinsing and quenching operations. In addition to suspended solids and oils these effluents may contain acids, alkalies, and soluble metals.

Environmental Impact of Pollutants

Chromium

Chromium, in its various valence states, is hazardous to man. It can produce lung tumors when inhaled and induces skin sensitizations. Large doses of chromates have corrosive effects on the intestinal tract and can cause inflammation of the kidneys. Levels of chromate ions that have no effect on man appear to be so low as to prohibit determination to date.

The toxicity of chromium salts toward aquatic life varies widely with the species, temperature, pH, valence of the chromium, and synergistic or antagonistic effects, especially that of hardness. Fish are relatively tolerant of chromium salts, but fish food organisms and other lower forms of aquatic life are extremely sensitive. Chromium also inhibits the growth of algae.

In some agricultural crops, chromium can cause reduced growth or death of the crop. Adverse effects of low concentrations of chromium on corn, tobacco and sugar beets have been documented.

Iron

Natural waters may be polluted by iron-bearing industrial wastes such as those from pickling operations and by the leaching of soluble iron salts from soil and rocks, e.g. acid-mine drainage and iron-bearing ground water.

Although many of the ferric and ferrous salts such as the chlorides are highly soluble in water, the ferrous ions are readily oxidized in natural surface waters to the ferric condition and form insoluble hydroxides. These precipitates tend to agglomerate, flocculate, and settle or be absorbed on surfaces; hence, the concentration of iron in well-aerated waters is seldom high. In ground water, the pH and

Eh may be such that high concentrations of iron remain in solution.

Iron in trace amounts is essential for nutrition. Indeed, larger quantities of iron are taken for therapeutic purposes. The daily nutritional requirement is 1 to 2 mg, and most diets contain 7 to 35 mg per day, with an average of 16. Consequently, drinking water containing iron in unpalatable and unesthetic concentrations, say 1.0 mg/l, would have little effect on the total daily intake.

Instead of physiological reasons, therefore, the limit is based on esthetic and taste considerations. Iron and manganese tend to precipitate as hydroxides and stain laundry and porcelain fixtures. It has also been reported that ferric iron combines with the tannin in tea to produce a dark violet color.

The taste threshold of iron in water has been given as 0.1 and 0.2 mg/l of iron from ferrous sulfate and ferrous chloride respectively. It has also been reported that ferrous iron imparts a taste at 0.1 mg/l and ferric iron at 0.2 mg/l.

Iron is an essential constituent of animal diets, but animals are sensitive to changes in iron concentration. Cows will not drink enough water if it is high in iron, and consequently, milk production is affected.

Most of the references deailing with this beneficial use are expressed in terms of specific iron salts. When iron is added to water in the form of chlorides, sulfates, or nitrates, the salt dissociates but the resulting ferrous or ferric ions combine with hydroxyl ions to form precipitates. Hence, very little of the iron remains in solution; but if the dosage is sufficient and the water is not strongly buffered, the addition of a soluble iron salt may lower the pH of the water to a toxic level. Furthermore, the deposition of iron hydroxides on the gills of fish may cause an irritation and blocking of the respiratory channels. Finally, heavy precipitates of ferric hydroxide may smother fish eggs.

When testing the effects of wastes from nail-making plants on trout, stickleback, and perch with wastes containing concentrations of chloride, hydrogen, ferric and ferrous ions, concentrations of 1000 mg/l of these mixed salts killed most fish within a few hours, but hardy stickleback were not killed until five hours exposure to 2500 mg/l. Much of the killing action was attributed to coatings of

iron oxide or hydroxide precipitates on the gills. The toxicity of iron and iron salts depends on whether the iron is present in the ferrous or ferric state and whether it is in solution or suspension.

Crenothrix, Gallionella, and other iron bacteria utilize iron as a source of energy and store it in their microbial protoplasm. They may accumulate in wells, treatment plants, pipelines, and other waterworks structures; or they may pass into the distribution system and cause customer complaints. Trouble with this organism is experienced frequently when the iron exceeds 0.2 mg/l.

Lead

Some natural waters contain lead in solution, as much as 0.4-0.8 mg/l, where mountain limestone and galena are found. In the U.S.A., lead concentrations in surface and ground waters used for domestic supplies range from traces to 0.04 mg/l averaging about 0.01 mg/l.

Foreign to the human body, lead is a cumulative poison. It tends to be deposited in bone as a cumulative poison. The intake that can be regarded as safe for everyone cannot be stated definitely, because the sensitivity of individuals to lead differs considerably. Lead poisoning usually results from the cumulative toxic effects of lead after continuous consumption over a long period of time period of time, rather than from occasional small doses. Lead is not amoung the metals considered essential to the nutrition of animals or human beings.

Lead may enter the body through food, air, and tobacco smoke as well as from water and other beverages. The exact level at which the intake of lead by the human body will exceed the amount excreted has not been established, but it probably lies between 0.3 and 1.0 mg per day. The mean daily intake of lead by adults in North America is about 0.33 mg. Of this quantity, 0.01 to 0.03 mg per day are derived from water used for cooking and drinking.

Lead in an amount of 0.1 mg ingested daily over a period of years has been reported to cause lead poisoning. On the other hand one reference considered 0.5 mg per day safe for human beings, and a daily dose of 2.0 mg for a one-year period apparently did not affect the health of one adult.

Lead poisoning among human beings is reported to have been caused by the drinking of water containing lead in concentrations varying from 0.042 mg/l to 1.0 mg/l or more.

On the other hand, other instances of drinking water at concentrations of 0.01 to 0.16 mg/l over long periods of time have apparently been nonpoisonous. The mandatory limit for lead in the USPHS Drinking Water Standards is 0.05 mg/l. Several countries use 0.1 mg/l as a standard.

Traces of lead in metal-plating baths will affect the smoothness and brightness of deposits. Inorganic lead salts in irrigation water may be toxic to plants and should be investigated further. It is not unusual for cattle to be poisoned by lead in the water; the lead need not necessarily be in solution, but may be in suspension, as, for example, oxycarbonate. Chronic lead poisoning among animals has been caused by 0.18 mg/l of lead in soft water. Most authorities agree that 0.5 mg/l of lead is the maximum safe limit for lead in a potable supply for animals. The toxic concentration of lead for aerobic bacteria is reported to be 1.0 mg/l; for flagellates and infusoria, 0.5 mg/l. The bacterial decomposition of organic matter is inhibited by 0.1 to 0.5 mg/l of lead.

Studies indicate that in water containing lead salts, a film of coagulated mucus forms, first over the gills, and then over the whole body of the fish, probably as a result of a reaction between lead and an organic constituent of mucus. The death of the fish is caused by suffocation due to this obstructive layer. In soft water, lead may be very toxic; in hard water equivalent concentrations of lead are less toxic. Concentrations of lead as low as 0.1 mg/l have been reported toxic or lethal to fish. Other studies have shown that the toxicity of lead toward rainbow trout increases with a reduction of the dissolved-oxygen concentration of the water.

Oil and Grease

Oil and grease exhibit an oxygen demand. Oil emulsions may adhere to the gills of fish or coat and destroy algae or other plankton. Deposition of oil in the bottom sediments can serve to exhibit normal benthic growths, thus interrupting the aquatic food chain. Soluble and emulsified material ingested by fish may taint the flavor of the fish flesh. Water soluble components may exert toxic action on fish. Floating oil may reduce the re-aeration of the water surface and in conjunction with emulsified oil may interfere with photosynthesis. Water insoluble components damage the plumage and costs of water animals and fowls. Oil and grease in a water can result in the formation of objectionable surface slicks preventing the full aesthetic enjoyment of the water.

Oil spills can damage the surface of boats and can destroy the aesthetic characteristics of beaches and shorelines.

pH, Acidity and Alkalinity

Acidity and alkalinity are reciprocal terms. Acidity is produced by substances that yield hydrogen ions upon hydrolysis and alkalinity is produced by substances that yield hydroxyl ions. The terms "total acidity" and "total alkalinity" are often used to express the buffering capacity of a solution. Acidity in natural waters is caused by carbon dioxide, mineral acids, weakly dissociated acids, and the salts of strong acids and weak bases. Alkalinity is caused by strong bases and the salts of strong alkalies and weak acids.

The term pH is a logarithmic expression of the concentration of hydrogen ions. At a pH of 7, the hydrogen and hydroxyl ion concentrations are essentially equal and the water is neutral. Lower pH values indicate acidity while higher values indicate alkalinity. The relationship between pH and acidity or alkalinity is not necessarily linear or direct.

Waters with a pH below 6.0 are corrosive to water works structures, distribution lines, and household plumbing fixtures and can thus add such constituents to drinking water as iron, copper, zinc, cadmium and lead. The hydrogen ion concentration can affect the "taste" of the water. At a low pH water tastes "sour". The bactericidal effect of chlorine is weakened as the pH increases, and it is advantageous to keep the pH close to 7. This is very significant for providing safe drinking water.

Extremes of pH or rapid pH changes can exert stress conditions or kill aquatic life outright. Dead fish, associated algal blooms, and foul stenches are aesthetic liabilities of any waterway. Even moderate changes from "acceptable" criteria limits of pH are deleterious to some species. The relative toxicity to aquatic life of many materials is increased by changes in the water pH. Metalocyanide complexes can increase a thousand-fold in toxicity with a drop of 1.5 pH units. The availability of many nutrient substances varies with the alkalinity and acidity. Ammonia is more lethal with a higher pH.

The lacrimal fluid of the human eye has a pH of approximately 7.0 and a deviation of 0.1 pH unit from the norm may result in eye irritation for the swimmer. Appreciable irritation will cause severe pain.

Phosphorus

During the past 30 years, a formidable case has developed for the belief that increasing standing crops of aquatic plant growths, which often interfere with water uses and are nuisances to man, frequently are caused by increasing supplies of phosphorus. Such phenomena are associated with a condition of accelerated eutrophication or aging of waters. It is generally recognized that phosphorus is not the sole cause of eutrophication, but there is evidence to substantiate that it is frequently the key element in all of the elements required by fresh water plants and is generally present in the least amount relative to need. Therefore, an increase in phosphorus allows use of other, already present, nutrients for plant growths. Phosphorus is usually described, for this reasons, as a "limiting factor."

When a plant population is stimulated in production and attains a nuisance status, a large number of associated liabilities are immediately apparent. Dense populations of pond weeds make swimming dangerous. Boating and water skiing and sometimes fishing may be eliminated because of the mass of vegetation that serves as an physical impediment to such activities. Plant populations have been associated with stunted fish populations and with poor fishing. Plant nuisances emit vile stenches, impart tastes and odors to water supplies, reduce the efficiency of industrial and municipal water treatment, impair aesthetic beauty, reduce or restrict resort trade, lower waterfront property values, cause skin rashes to man during water contact, and serve as a desired substrate and breeding ground for flies.

Phosphorus in the elemental form is particularly toxic, and subject to bioaccumulation in much the same way as mercury. Colloidal elemental phosphorus will poison marine fish (causing skin tissue breakdown and discoloration). Also, phosphorus is capable of being concentrated and will accumulate in organs and soft tissues. Experiments have shown that marine fish will concentrate phosphorus from water containing as little as 1 ug/l.

Tin

Tin is not present in natural waters, but it may occur in industrial wastes. Tin salts therefore, may reach surface waters or ground water; but because many of the salts are insoluble in water, it is unlikely that much of the tin will remain in solution or suspension. No reports have been uncovered to indicate that tin can be detrimental in domestic water supplies. Traces of tin occur in the human

diet from canned foods and it has been estimated that the average diet contains 17.14 mg of tin per day. Man can apparently tolerate 850 to 1000 mg per day of free tin in the diet. There is no definite evidence that tin plays any essential biological role in human nutrition.

Rats have tolerated 25 mg or more of sodium stannous tartrate in the diet over a period of 4 to 12 months without ill effects. Cats fed 20 mg of tin, as stannous tartrate or stannous chloride, per kg of body weight, showed no effect over a 3 month period but dosages of 30 and 50 mg per kg apparently caused some loss of body weight. Guinea pigs survived on a diet containing 770 mg/kg of tin salts. On the basis of these feeding experiments it is unlikely that any concentration of tin that would occur in water could be detrimental to livestock.

It is apparent that trace concentrations of tin are beneficial to fish. Stannous ions at a concentration of about 0.6 mg/l accelerated the growth of goldfish. It has been reported that goldfish survived 1000 mg/l of $SnCl_2$ (626 mg/l of tin) in very soft water at pH 3.5 for 1.0 to 1.5 hours and in hard water at pH 3.8 for 4 to 5 hours. Young eels have survived stannous chloride at a concentration of 1.2 mg/l of tin for over 50 hours, but succumbed to 6.0 mg/l in 2.8 hours.

Toxic Substances

The terms "toxic substance" or "toxic minerals" occur in standards of criteria that have propsoed or promulgated by state and interstate water-pollution-control agencies, but unfortunately the terms are not well defined. Furthermore, where either term is used, qualitative rather than quantitative limits are set. The New England Interstate Water Pollution Control Commission, for example, specified that "substances potentially toxic" shall be "none" in Classes A and B, and "not in toxic concentrations or combinations" in Classes C and D (see Chapter III).

Total Suspended Solids

Suspended solids include both organic and inorganic materials. The inorganic components include sand, silt, and clay. The organic fraction includes such materials as grease, oil, tar, animal and vegetable fats, various fibers, sawdust, hair, and various materials from sewers. These solids may settle out rapidly and bottom deposits are often a mixture of both organic and inorganic solids. They adversely affect fisheries by covering the bottom of the

stream or lake with a blanket of material that destroys the fish-food bottom fauna or the spawning ground of fish. Deposits containing organic materials may deplete bottom oxygen supplies and produce hydrogen sulfide, carbon dioxide, methane, and other noxious gases.

In raw water sources for domestic use, state and regional agencies generally specify that suspended solids in streams shall not be present in sufficient concentration to be objectionable or to interfere with normal treatment processes. Suspended solids in water may interfere with many industrial processes, and cause foaming in boilers, or encrustations on equipment exposed to water, especially as the temperature rises. Suspended solids are undesirable in water for textile industries; paper and pulp; beverages; dairy products; laundries; dyeing; photography; cooling systems, and power plants. Suspended particles also serve as a transport mechanism for pesticides and other substances which are readily sorbed into or onto clay particles.

Solids may be suspended in water for a time, and then settle to the bed of the stream or lake. These settleable solids discharged with man's wastes may be inert, slowly biodegradable materials, or rapidly decomposable substances. While in suspension, they increase the turbidity of the water, reduce light penetration and impair the photosynthetic activity of aquatic plants.

Solids in suspension are aesthetically displeasing. When they settle to form sludge deposits on the stream or lake bed, they are often much more damaging to the life in water, and they retain the capacity to displease the senses. Solids, when transformed to sludge deposits, may do a variety of damaging things, including blanketing the stream or lake bed and thereby destroying the living spaces for those benthic organisms that would otherwise occupy the habitat. When of an organic and therefore decomposable nature, solids use a portion or all of the dissolved oxygen available in the area. Organic materials also serve as a seemingly inexhaustible food source for sludgeworms and associated organisms.

Turbidity is principally a measure of the light absorbing properties of suspended solids. It is frequently used as a substitute method of quickly estimating the total suspended solids when the concentration is relatively low.

Zinc

Occurring abundantly in rocks and ores, zinc is readily refined into a stable pure metal and is used extensively for galvanizing, in alloys, for electrical purposes, in printing plates, for dye-manufacture and for dyeing processes, and for many other industrial purposes. Zinc salts are used in paint pigments, cosmetics, pharmaceuticals, dyes, insecticides, and other products too numerous to list herein. Many of these salts (e.g., zinc chloride and zinc sulfate) are highly soluble in water; hence it is to be expected that zinc might occur in many industrial wastes. On the other hand, some zinc salts (zinc carbonate, zinc oxide, zinc sulfide) are insoluble in water and consequently it is to be expected that some zinc will precipitate and be removed readily in most natural waters.

In zinc-mining areas, zinc has been found in waters in concentrations as high as 50 mg/1 and in effluents from metal-plating works and small-arms ammunition plants it may occur in significant concentrations. In most surface and ground waters, it is present only in trace amounts. There is some evidence that zinc ions are adsorbed strongly and permanently on silt, resulting in inactivation of the zinc.

Concentrations of zinc in excess of 5 mg/1 in raw water used for drinking water supplies cause an undesirable taste which persists through conventional treatment. Zinc can have an adverse effect on man and animals at high concentrations.

In soft water, concentrations of zinc ranging from 0.1 to 1.0 mg/1 have been reported to be lethal to fish. Zinc is thought to exert its toxic action by forming insoluble compounds with the mucous that covers the gills, by damage to the gill epithelium, or possibly by acting as an internal poison. The sensitivity of fish to zinc varies with species, age and condition, as well as with the physical and chemical characteristics of the water. Some acclimatization to the presence of zinc is possible. It has also been observed that the effects of zinc poisoning may not become apparent immediately, so that fish removed from zinc-contaminated to zinc-free water (after 4-6 hours of exposure to zinc) may die 48 hours later. The presence of copper in water may increase the toxicity of zinc to aquatic organisms, but the presence of calcium or hardness may decrease the relative toxicity.

Observed values for the distribution of zinc in ocean waters vary widely. The major concern with zinc compounds in marine waters is not one of acute toxicity, but rather of the long-term sub-lethal effects of the metallic compounds and complexes. From an acute toxicity point of view,

invertebrate marine animals seem to be the most sensitive organisms tested. The growth of the sea urchin, for example, has been retarded by as little as 30 ug/l of zinc.

Zinc sulfate has also been found to be lethal to many plants, and it could impair agricultural uses.

SECTION VII

CONTROL AND TREATMENT TECHNOLOGY

INTRODUCTION

Plant studies were conducted in each subcategory at plants that were deemed to be the best relative to performance levels attained by their treatment facilities. The plants visited were selected by the EPA from the candidate plants listed in Table 18. Table 48 presents a brief summary of treatment practices employed at all plants visited in this study, and shows the variability of treatment techniques employed in the industry. Included in each subcategory are tables presenting the size, location, and ages of the plants that were visited.

RANGE AND PERMUTATIONS OF TREATMENT TECHNOLOGY AND CURRENT PRACTICE AS EXEMPLIFIED BY PLANTS VISITED DURING THE STUDY

In each subcategory, a discussion is presented on the full range of technology employed within the industry, followed by a discussion on the treatment practices, effluent loads, and reduction benefits at the plants that were visited. The effluent is stated in terms of gross plant effluent waste load. In addition, this section contains a general treatise on parameters inherent in steel industry wastes.

HOT FORMING - PRIMARY

The wastewaters produced are primarily the result of the following types of water systems employed in the blooming and slabbing mills. Wastewaters result from the direct water spray cooling of mill equipment, high pressure descaling spray water system, automatic scarfing high and low pressure spray waters, and water discharged from the wet type of scarfer fume collection systems.

The wastewaters from descaling and mill equipment cooling are generally discharged via flumes or trenches to inground concrete settling chambers called scale pits where the heavier iron oxide particles are settled out. These scale pits generally contain underflow weirs with launders to trap oils and greases picked up by the cooling waters. The waste oils are removed from the water surfaces by belt, rope, or other type of floating oil skimmers, and pumped to large capacity waste oil storage tanks where contract haulers periodically remove the accumulated oils. The scale is

TABLE 48

WASTEWATER TREATMENT PRACTICES
OF PLANTS VISITED IN STUDY

PLANT	PRACTICE
HOT FORMING PRIMARY	
A-2	Primary and secondary clarification with partial recycle of clarified wastewaters, accompanied by deep bed filtration of the remainder. The filter effluent is discharged to receiving stream.
B-2	Primary and secondary clarification followed by deep bed filtration. The filter effluent is discharged to receiving stream.
C-2	Deep bed filtration of scale pit effluent followed by discharge to receiving stream.
D-2	Primary and secondary clarification followed by deep bed filtration. Filter discharge is returned to intake pumps for recycle and reuse throughout the mill.
L-2	Primary clarification including oil skimming, followed by chemical treatment, vacuum filtration, and cooling with partial blowdown of 1-2%. Treated water is reused in mill and elsewhere in plant as makeup and noncontact cooling water.
HOT FORMING SECTION	
E-2	Primary settling of mill wastes followed by secondary clarification, sand filtration, cooling, and recycle back to mills. Blowdown from system is less than 4%.
F-2	Primary and secondary clarification including oil skimming. Portion of effluent is returned as flushing and coil cooling water. Remainder is discharged to a central treatment system undergoing vacuum filtration, chemical treatment, and cooling with discharge of cooling tower blowdown.

PLANT	PRACTICE
G-2	Primary and secondary clarification including oil skimming, followed by sand filtration, cooling, and total recycle.
H-2	Scale pit effluent is sent to cyclonic solids separator with clarified water discharged, and concentrated sludges returned to scale pit.
I-2	Scale pit effluent treated by extended settling in a terminal lagoon.
HOT FORMING FLAT	
J-2	Primary and secondary clarification, chemical treatment, gravity filtration and discharge to receiving stream.
K-2	Primary and secondary clarification, filtration, cooling and recycle for mill use. Blowdown from system is 2-3%.
L-2	Primary clarification including oil skimming, followed by chemical treatment, vacuum filtration, and cooling with partial blowdown of 1-2%. Treated water is reused in mill and elsewhere in plant as makeup and noncontact cooling water.
M-2	Primary clarification including oil skimming, followed by chemical treatment, clarification, filtration, and discharge to receiving stream.
N-2	Primary clarification, high flow sand filtration, cooling, and total recycle to mill.
PIPE AND TUBES	
E-2	Primary settling, clarification, filtration, cooling and recycle to other hot forming operations.
GG-2	Primary sedimentation, oil separation, and recycle to pond for plant use.
HH-2	Total recycle system. Settle in series of ponds, return to reservoir for process reuse throughout plant.

PLANT	PRACTICE
II-2	Sedimentation, oil skimming, filtration, final settling lagoon, and discharge to receiving stream.
JJ-2	Primary sedimentation, mixing with acid rinses, lagooned for evaporative cooling, and recycled for plant reuse.
KK-2	Primary and secondary sedimentation, oil separation, polyelectrolyte addition, and discharge to receiving stream.
PICKLING - BATCH SULFURIC - CONCENTRATED	
I-2	Spent pickle liquor disposed of via contract hauling.
O-2	Batch evaporative crystallization of spent sulfuric acid. Acid recovered with production of a ferrous heptahydrate.
P-2	Batch pickle liquor regeneration by vacuum crystallization.
Q-2	Batch pickle regeneration through cooling of spent pickle liquor and precipitation of ferrous sulfate heptahydrate.
R-2	Combining pickle liquor in an equalization tank, flash mixing with acetylene sludge, lagooning, and discharge to creek.
S-2	Spent pickle liquor disposed of via contract hauling.
PICKLING - BATCH SULFURIC - RINSE	
I-2	Rinses mixed with other plant wastes in a terminal lagoon and discharge to receiving stream.
O-2	Rinses recycled back as makeup to pickle tank.
P-2	Rinses metered to sewer discharge.
Q-2	Pinses and mists from filter recycled back as makeup to pickle tank.

PLANT	PRACTICE
R-2	Combining acid rinses with other wastes in an equalization tank, flash mixing with acetylene sludge, lagooning, and discharge to creek.
S-2	Standing rinse reused as makeup to pickle tank. Running rinse is treated with lime and lagooned. Lagoon sludges are contract hauled, and overflows are recycled to rinse.
PICKLING - CONTINUOUS SULFURIC	
T-2	Pickle liquor regeneration by evaporative concentration.
T-2	Rinses recycled back as makeup to pickle tank.
PICKLING - BATCH HYDROCHLORIC - CONCENTRATED	
U-2	Spent pickle liquor disposed of via contract hauling.
V-2	Spent pickle liquor disposed of via contract hauling.
PICKLING - BATCH HYDROCHLORIC - RINSE	
U-2	Rinses treated in batch treatment tank by sodium carbonate neutralization.
V-2	Caustic neutralization of rinse water prior to sanitary sewer discharge.
PICKLING - CONTINUOUS HYDROCHLORIC - CONCENTRATED	
I-2	Spent pickle liquor disposed of via contract hauling.
W-2	Pyrolytic regeneration of hydrochloric acid.
X-2	Spent acid recovery via hydrochloric acid regeneration.
Y-2	Pyrolytic regeneration of hydrochloric acid.
Z-2	Neutralization of spent pickle liquor clarification, with disposal of the supernatant to the sewer.

PLANT	PRACTICE
AA-2	Deep well disposal of spent liquor.
BB-2	Deep well disposal, or regeneration at an off-site HCl plant.
PICKLING - CONTINUOUS HYDROCHLORIC - RINSE	
I-2	Dilution and mixing with other mill wastes in a terminal lagoon with discharge to receiving stream.
W-2	Dilution of rinse waters and sewer discharge.
X-2	Dilution of rinse waters and sewer discharge.
Y-2	Dilution of rinse waters and sewer discharge.
Z-2	Rinses are combined with concentrated pickle liquor and treated by neutralization, clarification, and discharge to sanitary sewer.
AA-2	Cascade rinse system and deep well disposal.
BB-2	Rinses mixed with cold mill wastes, neutralized, clarified, lagooned and discharged to receiving stream.
SCALE REMOVAL - SHOT BLAST	
CC-2	Dry removal system, no aqueous discharge.
WIRE MAKING	
I-2	Dilution and reaction with other mill wastes in a terminal lagoon and discharge to receiving stream.
Q-2	No process wastewaters - noncontact cooling waters from wire drawing are discharged untreated.
LL-2	Mixing with other process wastewaters for chemical treatment that includes oil skimming, chemical reduction, coagulation, sedimentation, clarification, and aeration.

PLANT	PRACTICE
COLD ROLLING	
X-2	Air flotation, chemical treatment, clarification, and plant reuse.
BB-2	Mixing with acid rinse waters, neutralization, aeration, clarification, lagooning, and discharge to receiving stream.
DD-2	Oil skimming, chemical treatment, sedimentation, and discharge to receiving stream.
EE-2	Oil skimming, chemical treatment, lagooning, and sewer discharge.
FF-2	Primary sedimentation, mixing, chemical treatment, clarification, and sewer discharge.
HOT COATINGS - GALVANIZING	
I-2	Dilution and reaction with other mill wastes in a terminal lagoon and discharge to receiving stream.
MM-2	Mixing of coating wastewaters, oil separation, aeration, sedimentation, lagooning and recirculation to service water with intermittent blowdown to receiving stream.
NN-2	Lime treatment, polymer addition, and clarification.
HOT COATINGS - TERNE PLATE	
OO-2	Mixing and dilution of rinse waters prior to discharge.
PP-2	Mixing and dilution of rinse waters prior to discharge.

cleaned out by mechanical means such as clam shell buckets, drag link conveyors, etc.

The wastewaters discharged from scale pits are either discharged to plant sewers or are recycled back to the mills. The suspended solids content in overflows is generally 100 to 200 mg/l, but these wastewaters can be further treated by means of filtration or thickeners with chemical coagulation.

The wastewaters from the automatic scarfer spray water systems are generally routed into a scale pit where the heavy slag particles are settled out and the overflow waters discharged to the plant sewers. Often these spray waters are discharged into the same primary scale pit as the mill equipment cooling and descaling waters.

The water systems employed for the wet type of scarfer fume collection systems depend upon the type of equipment utilized. High energy venturi scrubbers or wet type of precipitators are used due to the saturated condition of gases. The high energy scrubbers use a recycle water system with a 3-6 l/sec (50 to 100 gpm) blowdown rate discharged to the scale pits.

The wet precipitators can be classed as intermittent spray or continuous water types.

The intermittent type uses internal water sprays periodically to clean or wash down the collector plates, whereas the continuous water type uses flooded and irrigated collector plates. The wastewaters from the precipitator systems are generally discharged to a thickener with chemical coagulation. The clarified waters can be recycled back to the precipitator systems or discharged to plant sewer systems.

Plant Visits

Five primary plants were visited in the study. Table 6 presents a summary of the plants visited in respect to geographic location, daily production, plant age, and age of the treatment facility. Table 49 presents the plants raw and effluent waste loads.

Plant A-2 - Figure 21. Wastewaters from blooming and billet mills are combined at this plant. The plant practices both primary and secondary clarification followed by a series of deep bed filters. Part of the clarifier overflow is recycled to the mills. The filter effluent is discharged.

TABLE 49
WATER EFFLUENT TREATMENT COSTS
HOT FORMING - PRIMARY

PLANT	A-2*	B-2	C-2	D-2*	L-2	RANGE
INITIAL INVESTMENT	860,610	1,729,939	3,692,000	1,182,600		
ANNUAL COSTS:			(Estimated)			
OPERATING LABOR	5,787	11,111	36,920	37,500	Cost Data	
UTILITIES	NA	NA	-	58,600	Not Supplied	
MAINTENANCE	71,952	102,315	92,300	1,570	By Company	
DEPRECIATION	86,061	172,994	369,200	118,260		
COST OF CAPITAL	36,145	72,657	155,064	49,700		
OTHER	-	-	-	-		
TOTAL	199,945	359,077	653,484	265,630		
$/TON	0.184	0.259	0.437	0.404		0.184-0.437
$/1000 GAL TPT	0.206	0.507	0.561	0.451		0.206-0.561

*Portion attributed to this subcategory only.

AVERAGE NET PLANT RAW WASTE LOAD

PARAMETERS	lb/TON	mg/l	lb/TON	mg/l	lb/TON	mg/l	lb/TON	mg/l	lb/TON	mg/l	lb/TON	mg/l
Flow (gal./ton)	893	-	511	-	779	-	895	-	614	-	511-895	-
Suspended Solids	0.640	86	0.243	57	0.136	21	0.343	46	0.0563	11	0.0563-0.640	11-86
Oil and Grease	0.104	14	0.640	150	0.0130	2	0.298	40	0.0205	4	0.0130-0.640	2-150
pH (units)	-	7.6	-	8.0	-	8.0	-	8.0	-	7.8		7.6-8.0

AVERAGE GROSS PLANT EFFLUENT WASTE LOAD

PARAMETERS	lb/Ton	mg/l	lb/Ton	mg/l	lb/Ton	mg/l	lb/Ton	mg/l	lb/Ton	mg/l	lb/Ton	mg/l
Flow (gal./ton)	24	-	511	-	779	-	895**	-	52***	-	52-895	-
Suspended Solids	0.00874	2	0.0128	3	0.0324	5	0.172	23	0.00217	5	0.00217-0.172	2-23
Oil and Grease	0.00742	1.7	0.00936	2.2	0.0454	7	0.0597	8	0.00347	8	0.00347-0.0597	1.7-8
pH (units)	-	7.8	-	7.8		7.7	-	8.2	-	8.6		7.7-8.6

**Reused in all mill operations.
***Partly reused elsewhere; remainder discharged.

PROCESS: HOT FORMING-PRIMARY & SECTION
PLANT: A-2
PRODUCTION: 4951 METRIC TONS OF STEEL/DAY (5458 TONS OF STEEL/DAY) PRIMARY AND SECTION

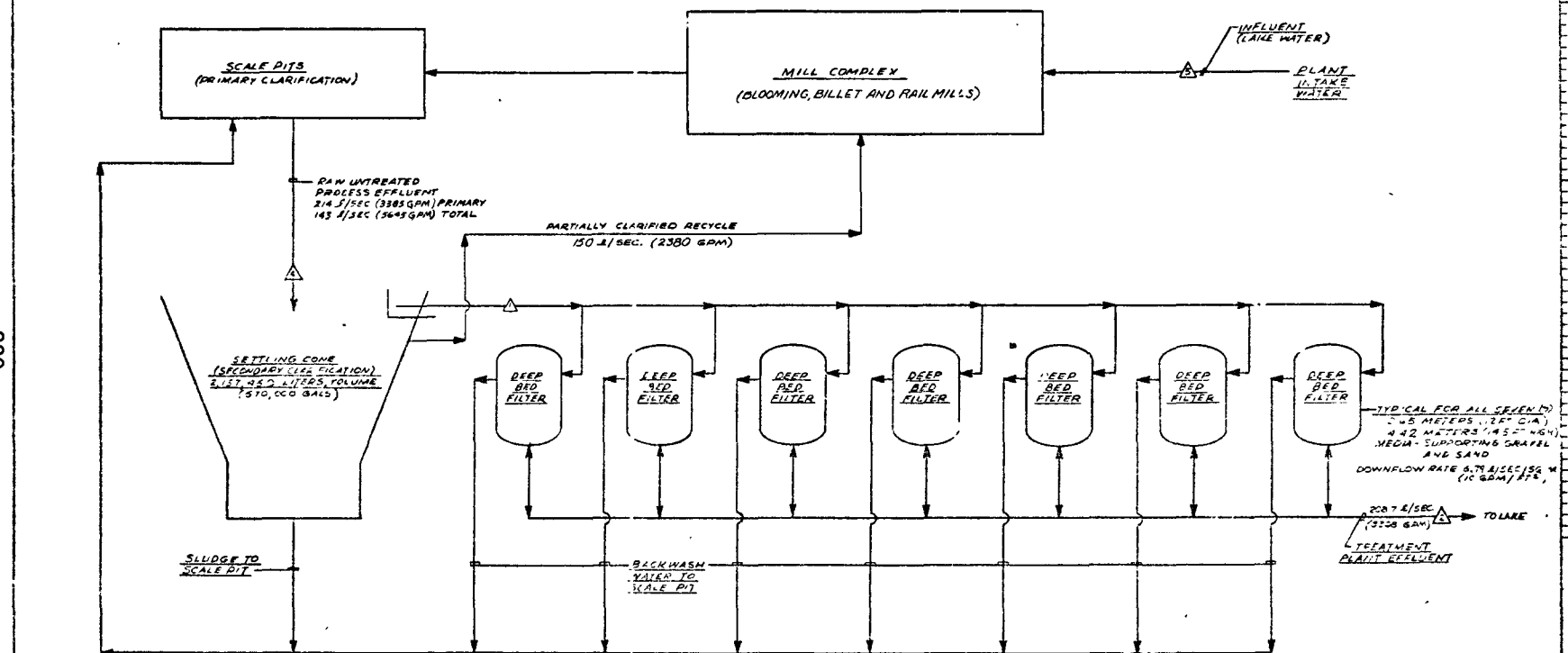

ENVIRONMENTAL PROTECTION AGENCY
STEEL INDUSTRY STUDY
HOT FORMING
WASTEWATER TREATMENT SYSTEM
WATER FLOW DIAGRAM

6-3-74 FIGURE 21

Plant B-2 - Figure 22. Blooming mill wastewaters are treated by primary and secondary clarification followed by deep bed filtration. The filter effluent is discharged to the receiving

Plant C-2 - Figure 23. Blooming mill wastewaters are treated via primary sedimentation followed by deep bed filtration and recycle to a variety of plant water uses.

Plant D-2 - Figure 24. This plant combines blooming and billet mill wastewaters for treatment. Oil skimming, primary and secondary clarification are utilized followed by deep bed filtration. Filter discharge is returned to intake pumps for recycle and reuse in the mill.

Plant L-2 Figure 32. This plant uses primary clarification including oil skimming, followed by chemical treatment, vacuum filtration, and cooling with partial blowdown. Treated water is reused in mill and elsewhere in plant as makeup and noncontact cooling water.

HOT FORMING - SECTION

The wastewaters produced are primarily the result of reheat furnace noncontact cooling waters, mill equipment cooling waters, and high pressure spray water descaling systems. The furnace cooling waters are generally once-through and discharged to plant sewers.

The mill equipment cooling and high pressure descaling waters are discharged via flumes and trenches to scale pits where the heavier solids are settled out. Oils and greases picked up by the cooling waters are trapped in the scale pits by means of underflow weirs and launders.

The oils are removed from the surface of scale pit waters by means of belt, rope or floating type oil skimmers, and pumped to large capacity oil storage tanks where contract haulers periodically remove the accumulated oils. The scale pit overflow waters are generally discharged to plant sewers, but sometimes recycled back to the mills as sluicing or flushing waters in flumes and trenches. Some mills use mechanical scraper or drag line buckets to remove the heavier iron oxide scale beneath the mill stands and stock pile the scale for recycling in mills. The waters are still flushed into scale pits or settling chambers for final sedimentation and skimming of waste oils and greases.

PROCESS: HOT FORMING-PRIMARY
PLANT: B-2
PRODUCTION: 6967 METRIC TONS OF STEEL/DAY
(7680 TONS OF STEEL/DAY)

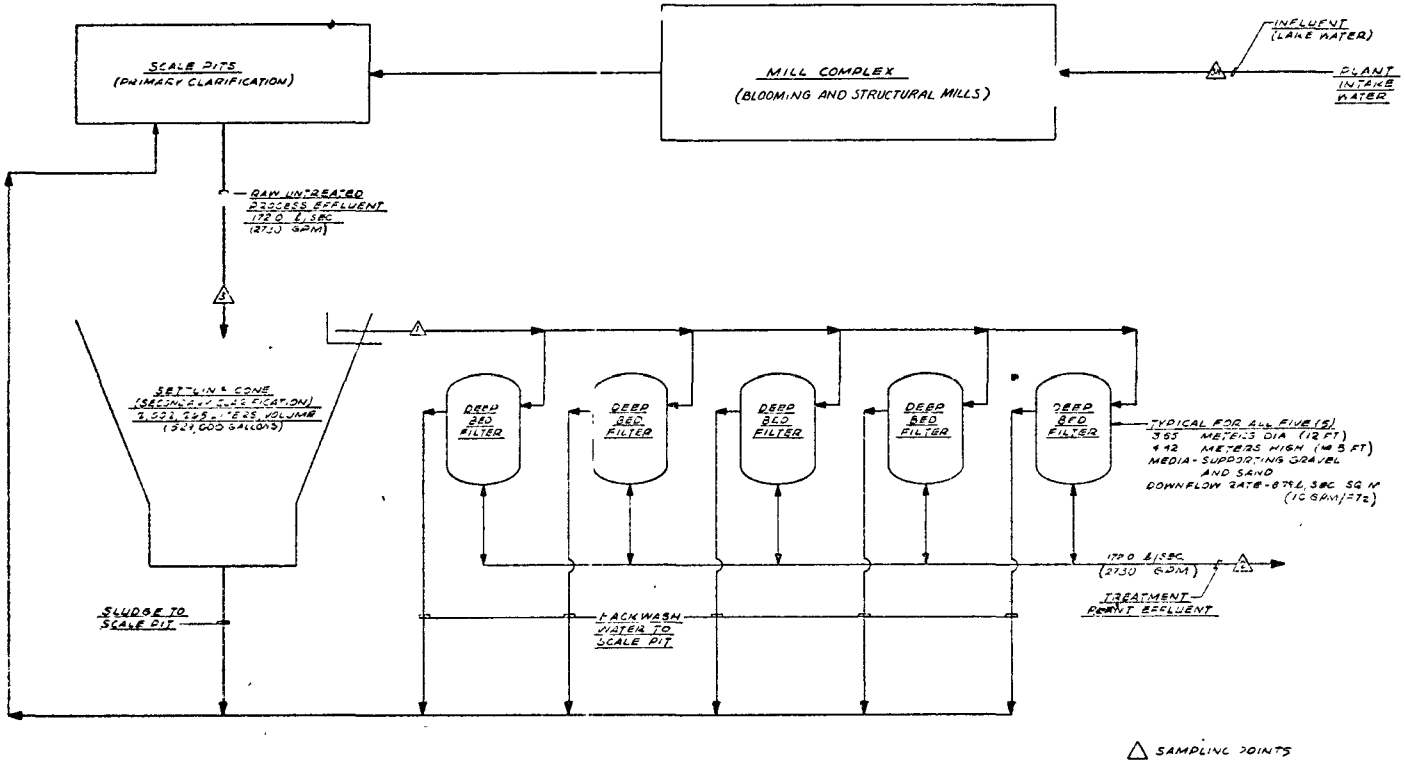

ENVIRONMENTAL PROTECTION AGENCY
STEEL INDUSTRY STUDY
HOT FORMING
WASTEWATER TREATMENT SYSTEM
WATER FLOW DIAGRAM

5-20-74 FIGURE 22

PROCESS: HOT FORMING-PRIMARY
PLANT: C-2
PRODUCTION: 3856 METRIC TONS OF STEEL/DAY
(4250 TONS OF STEEL/DAY)

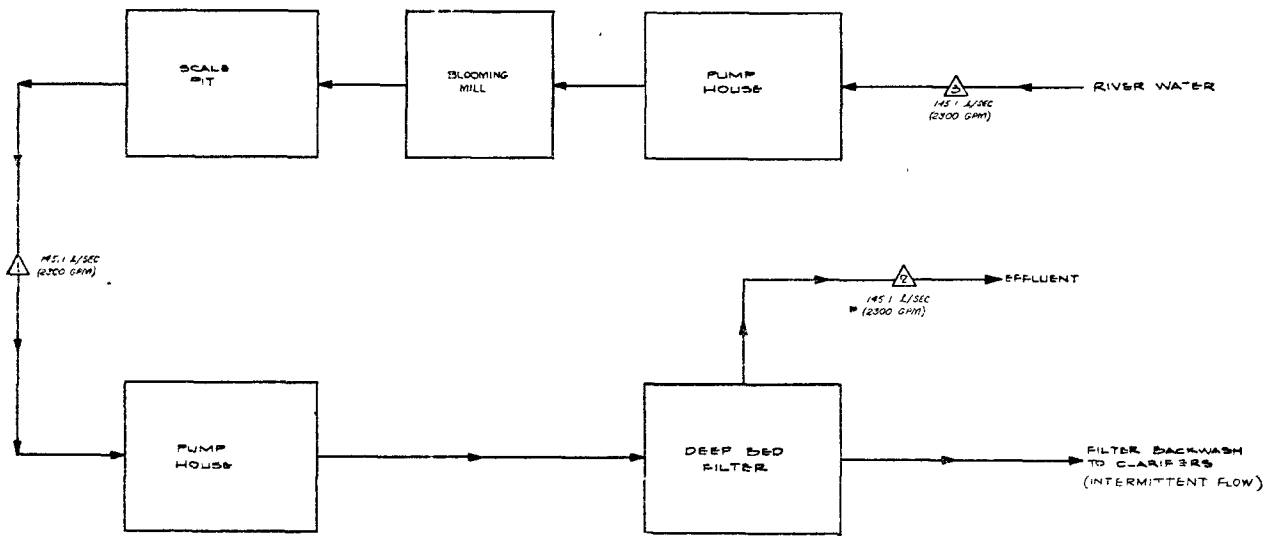

△ SAMPLING POINTS

ENVIRONMENTAL PROTECTION AGENCY
STEEL INDUSTRY STUDY
HOT FORMING
WASTEWATER TREATMENT SYSTEM
WATER FLOW DIAGRAM

4-2-74 FIGURE 23

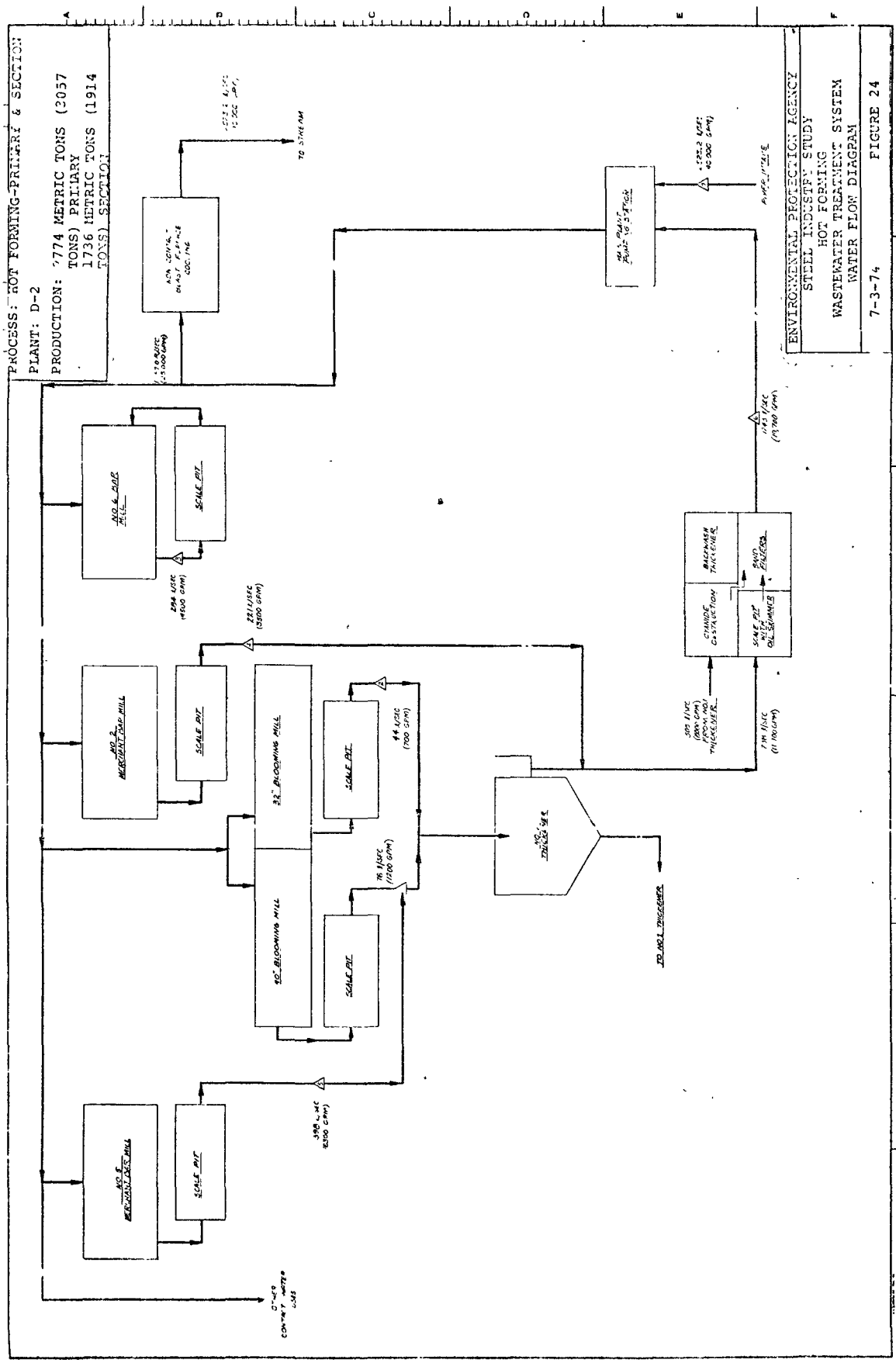
PROCESS: HOT FORMING-PRIMARY & SECTION
PLANT: D-2
PRODUCTION: 2774 METRIC TONS (3057 TONS) PRIMARY
1736 METRIC TONS (1914 TONS) SECTION
ENVIRONMENTAL PROTECTION AGENCY
STEEL INDUSTRY STUDY
HOT FORMING
WASTEWATER TREATMENT SYSTEM
WATER FLOW DIAGRAM
7-3-74
FIGURE 24
NO 6 BAR MILL
SCALE PIT
NO 2 MERCHANT BAR MILL
32" BLOOMING MILL
40" BLOOMING MILL
NO 5 MERCHANT BAR MILL
NO 1 THICKENER
TO NO 1 THICKENER
CYANIDE DESTRUCTION
BACKWASH THICKENER
SAND FILTERS
SCALE PIT WITH OIL SKIMMER
TO STREAM

PROCESS: HOT FORMING-PRIMARY
HOT FORMING-FLAT-HOT STRIP & SHEET
PLANT: L-2

PRODUCTION: 9854 METRIC TONS (10,864 TONS)/DAY PRIMARY
10,506 METRIC TONS (11,583 TONS)/DAY FLAT

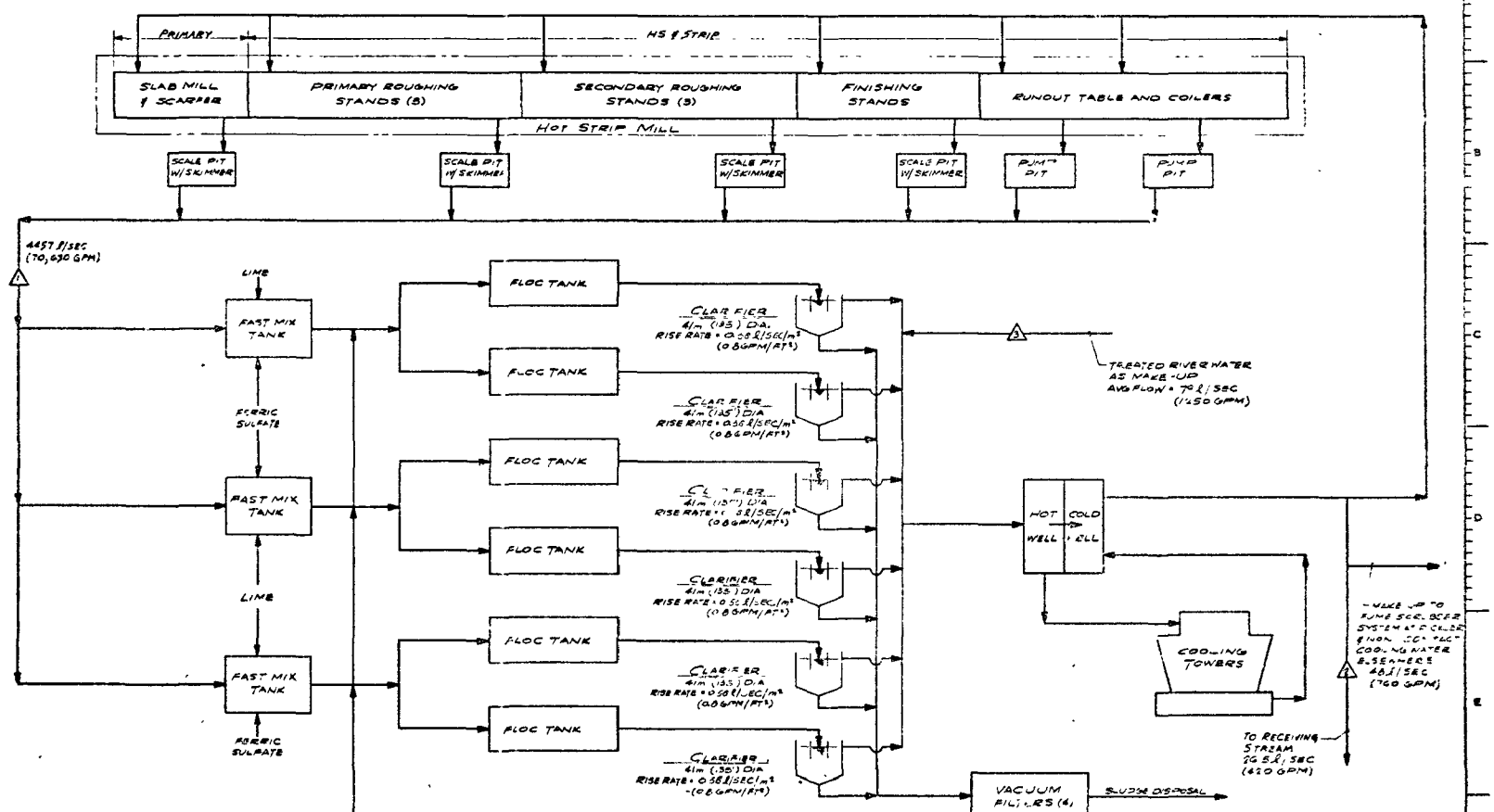

ENVIRONMENTAL PROTECTION AGENCY
STEEL INDUSTRY STUDY
HOT FORMING
WASTEWATER TREATMENT SYSTEM
WATER FLOW DIAGRAM

4-19-74 FIGURE 32

Thickeners with chemical coagulation or filtration can be used to further treat the scale pit overflow waters and reduce the suspended solids from 100-200 mg/l to 25 mg/l.

Plant Visits

Seven section locations containing ten production units were visited in the study. Table 7 presents a summary of the plants visited in respect to geographic location, daily production, plant age, and age of the treatment facility. Table 50 presents the plants raw and effluent waste loads.

Plant A-2 - Figure 21. Wastewaters from blooming and billet mills are combined at this plant. The plant practices both primary and secondary clarification followed by a series of deep bed filters. Part of the clarifier overflow is recycled to the mills. The filter effluent is discharged.

Plant D-2 - Figure 24. This plant combines blooming and billet mill wastewaters for treatment. Oil skimming, primary and secondary clarification are utilized followed by deep bed filtration. Filter discharge is returned to intake pumps for recycle and reuse in the mill.

Plant E-2 - Figure 25. This plant utilizes primary settling of wastes from two mills, followed by secondary clarification, sand filtration, cooling, and recycle back to mills. Blowdown from system is less than 4%.

Plant F-2 - Figure 26. This plant practices primary and secondary clarification including oil skimming. Portion of effluent is returned as flushing and coil cooling water. Remainder is discharged to a central treatment system undergoing vacuum filtration, chemical treatment, and cooling with discharge of cooling tower blowdown.

Plant G-2 - Figure 27. This plant utilizes primary and secondary clarification including oil skimming on two mills, followed by sand filtration, cooling, and total recycle.

Plant H-2 - Figure 28. The plant scale pit effluent is sent to cyclonic solids separator with clarified water discharged to receiving stream.

Plant I-2 - Figure 29. All wastewaters from this plant are discharged to a terminal treatment lagoon.

HOT FORMING FLAT

Plate Mills

TABLE 50
WATER EFFLUENT TREATMENT COSTS
HOT FORMING - SECTION

PLANT	A-2*	D-2*	E-2	F-2	G-2	RANGE
INITIAL INVESTMENT	1,204,850	1,007,400	1,619,628	2,629,333	622,700	
ANNUAL COSTS:						
OPERATING LABOR	8,100	31,900	16,299	38,129		
UTILITIES	NA	50,000	36,439	67,898	13,900	
MAINTENANCE	100,733	1,330	10,061	59,884		
DEPRECIATION	120,485	100,740	161,963	262,933	62,270	
COST OF CAPITAL	50,604	42,300	68,024	110,432	26,130	
OTHER	-	-	152	3,347	-	
TOTAL	279,922	226,270	292,938	542,623	102,300	
$/TON	0.184	0.403	0.584	1.53	0.662	0.146-1.64
$/1000 GAL TRT	0.309	0.037	0.097	0.800	0.047	0.021-0.800

*Portion attributed to this subcategory only.

AVERAGE NET PLANT RAW WASTE LOAD

PARAMETERS	lb/TON	mg/l	lb/TON	mg/l	lb/TON	mg/l	lb/TON	mg/l	lb/TON	mg/l	lb/TON	mg/l
Flow (gal./ton)	596	-	11,047	-	5,995	-	1,914	-	14,017**	-	596-14,017**	-
Suspended Solids	0.427	86	3.867	42	3.098	62	0.415	26	2.439	21	0.415-5.220	21-125
Oil and Grease	0.0695	14	1.105	12	0.600	12	0.042	2.6	0.112	0.4	0.042-1.105	0.4-14
pH (units)		7.6	-	8.1	-	8.3	-	7.7	-	7.7	-	6.7-8.3

**Including N.C. cooling water.

AVERAGE GROSS PLANT EFFLUENT WASTE LOAD

PARAMETERS	lb/Ton	mg/l	lb/Ton	mg/l	lb/Ton	mg/l	lb/Ton	mg/l	lb/Ton	mg/l	lb/Ton	mg/l
Flow (gal./ton)	349	-	8,245***	-	223	-	140	-	0	-	0-8,245	-
Suspended Solids	0.00582	2	1.581	23	0.0186	10	0.0339	29	0	0	0-3.895	0-71
Oil and Grease	0.00495	1.7	0.550	8	0.0182	9.8	0.00970	8.3	0	0	0-0.976	0-17.8
pH (units)	-	7.8	-	8.2	-	8.3	-	8.0	-	-	-	6.7-8.3

***Reused in all mill operations.

TABLE 50 (Cont'd)
WATER EFFLUENT TREATMENT COSTS
HOT FORMING - SECTION

PLANT	H-2	I-2*				RANGE
INITIAL INVESTMENT	283,077	4,167,785				
ANNUAL COSTS:	(Estimated)					
OPERATING LABOR	2,800	-				
UTILITIES	4,200	507				
MAINTENANCE	7,200	65,424				
DEPRECIATION	28,300	416,778				
COST OF CAPITAL	12,000	175,047				
OTHER	-	39,513				
TOTAL	54,500	697,269				
$/TON	0.146	1.64				0.146-1.64
$/1000 GAL TRT	0.021	0.327				0.021-0.800

*Portion attributed to the subcategory only.

AVERAGE NET PLANT RAW WASTE LOAD

PARAMETERS	lb/TON	mg/l	lb/TON	mg/l	lb/TON	mg/l	lb/TON	mg/l	lb/TON	mg/l	lb/TON	mg/l
Flow (gal./ton)	6,947	-	5,013	-							596-14,017**	-
Suspended Solids	1.910	33	5.220	125							0.415-5.220	21-125
Oil and Grease	0.798	14	0.0585	1.4							0.042-1.105	0.4-14
pH (units)	-	6.7	-	7.6							-	6.7-8.3

** Including N.C. cooling water.

AVERAGE GROSS PLANT EFFLUENT WASTE LOAD

PARAMETERS	lb/Ton	mg/l	lb/Ton	mg/l	lb/Ton	mg/l	lb/Ton	mg/l	lb/Ton	mg/l	lb/Ton	mg/l
Flow (gal./ton)	6,586	-	5,013	-							0-8,245	-
Suspended Solids	3.895	71	1.628	39							0-3.895	0-71
Oil and Grease	0.976	17.8	0.585	14							0-0.976	0-17.8
pH (units)	-	6.9	-	6.7							-	6.7-8.3

PROCESS: HOT FORMING-SECTION: PIPE & TUBE

PLANT: E-2

PRODUCTION: 925 METRIC TONS (1020 TONS)/DAY ROD
1,004 METRIC TONS (1,107 TONS)/DAY BAR
496 METRIC TONS (547 TONS) /DAY PIPE & TUBE

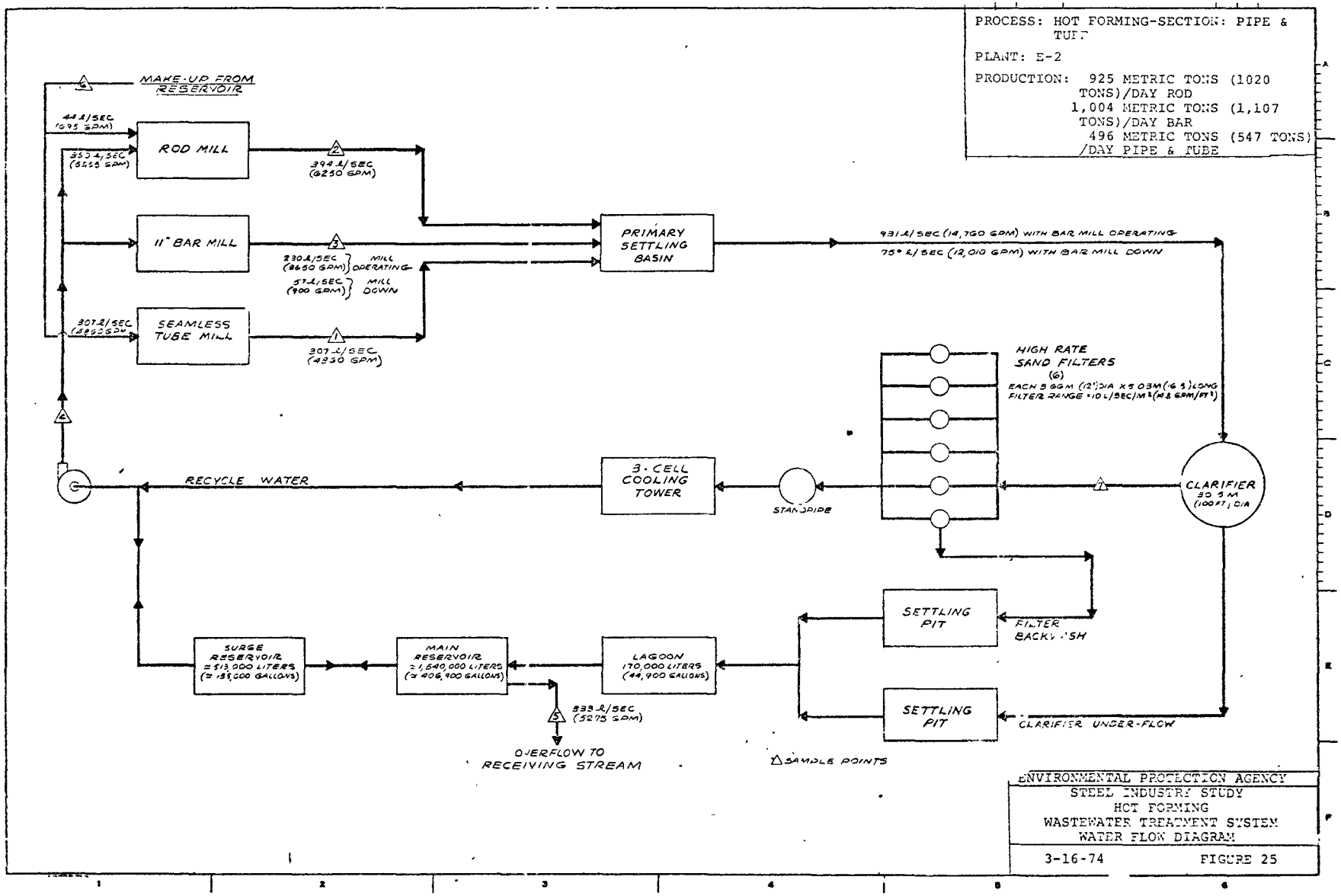

ENVIRONMENTAL PROTECTION AGENCY
STEEL INDUSTRY STUDY
HOT FORMING
WASTEWATER TREATMENT SYSTEM
WATER FLOW DIAGRAM

3-16-74 FIGURE 25

PROCESS: HOT FORMING-SECTION
PLANT: F-2
PRODUCTION: 2048 METRIC TONS OF STEEL/DAY
(2257 TONS OF STEEL/DAY)

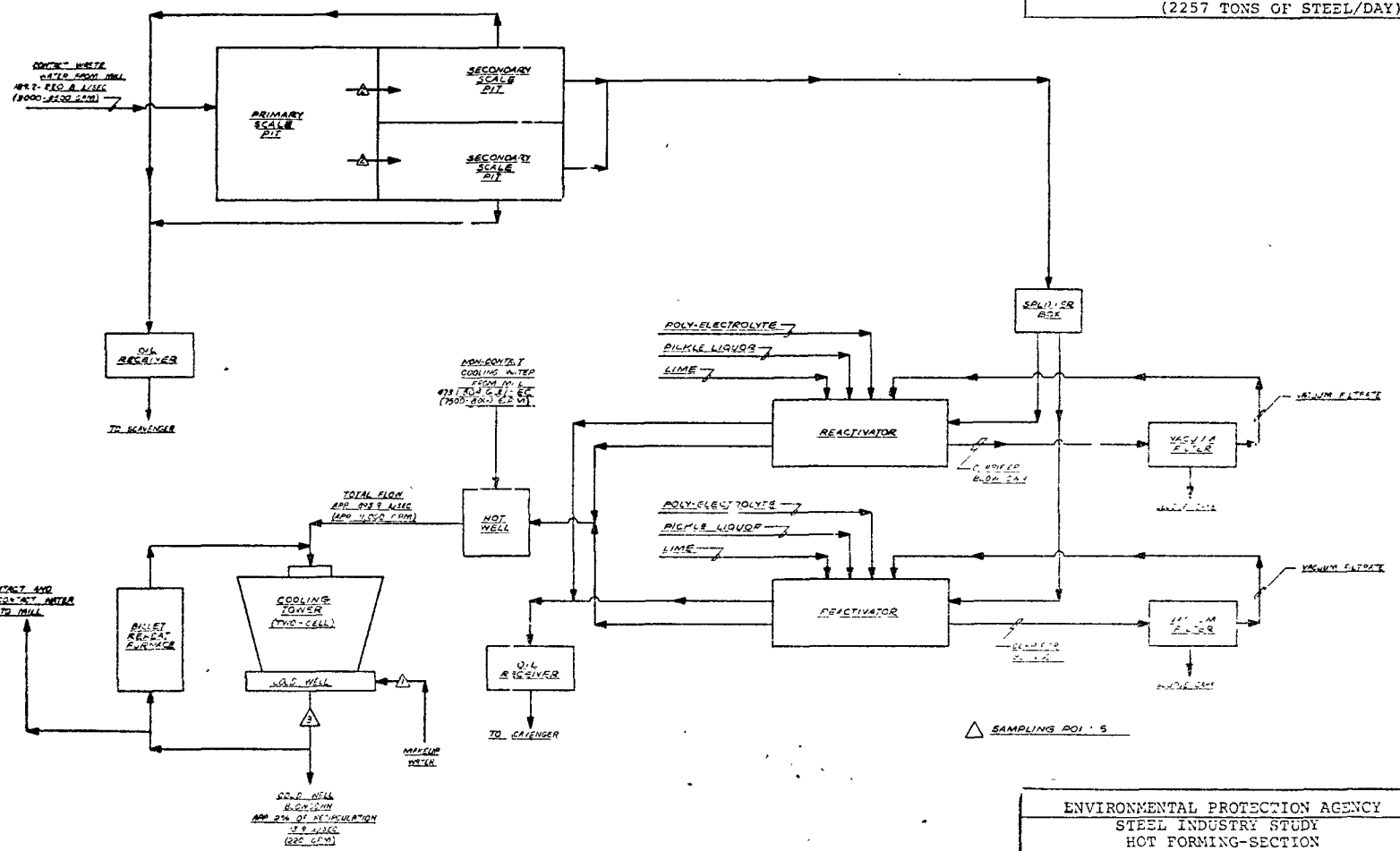

ENVIRONMENTAL PROTECTION AGENCY
STEEL INDUSTRY STUDY
HOT FORMING-SECTION
WASTEWATER TREATMENT SYSTEM
WATER FLOW DIAGRAM

4-8-74 FIGURE 26

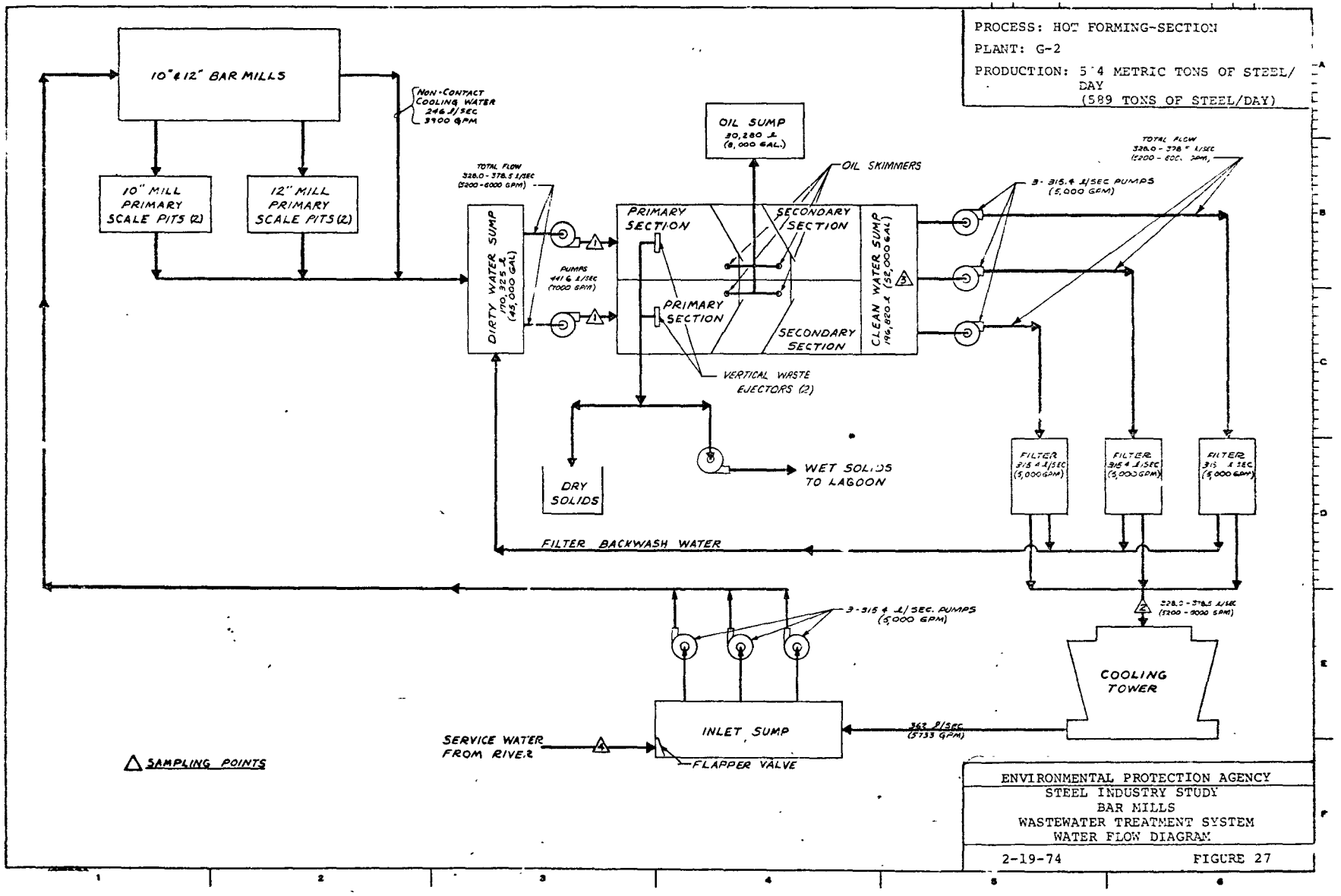
PROCESS: HOT FORMING-SECTION
PLANT: G-2
PRODUCTION: 5 '4 METRIC TONS OF STEEL/ DAY
(589 TONS OF STEEL/DAY)
10"& 12" BAR MILLS
NON-CONTACT COOLING WATER 246 L/SEC 3900 GPM
10" MILL PRIMARY SCALE PITS (2)
12" MILL PRIMARY SCALE PITS (2)
OIL SUMP 30,280 L (8,000 GAL.)
OIL SKIMMERS
TOTAL FLOW 328.0 - 378.5 L/SEC (5200 - 6000 GPM)
DIRTY WATER SUMP 170,325 L (45,000 GAL)
PUMPS 441.6 L/SEC (7000 GPM)
PRIMARY SECTION
SECONDARY SECTION
PRIMARY SECTION
SECONDARY SECTION
CLEAN WATER SUMP 196,820 L (52,000 GAL)
3 - 315.4 L/SEC PUMPS (5,000 GPM)
TOTAL FLOW 328.0 - 378.5 L/SEC (5200 - 6000 GPM)
VERTICAL WASTE EJECTORS (2)
DRY SOLIDS
WET SOLIDS TO LAGOON
FILTER 315.4 L/SEC (5,000 GPM)
FILTER 315.4 L/SEC (5,000 GPM)
FILTER 315.4 L/SEC (5,000 GPM)
FILTER BACKWASH WATER
328.0 - 378.5 L/SEC (5200 - 6000 GPM)
3 - 315.4 L/SEC. PUMPS (5,000 GPM)
COOLING TOWER
INLET SUMP
363 L/SEC (5733 GPM)
SERVICE WATER FROM RIVER
FLAPPER VALVE
SAMPLING POINTS
ENVIRONMENTAL PROTECTION AGENCY
STEEL INDUSTRY STUDY
BAR MILLS
WASTEWATER TREATMENT SYSTEM
WATER FLOW DIAGRAM
2-19-74
FIGURE 27

PROCESS: HOT FORMING-SECTION
PLANT: H-2
PRODUCTION: 724 METRIC TONS OF STEEL/DAY
(798 TONS OF STEEL/DAY)

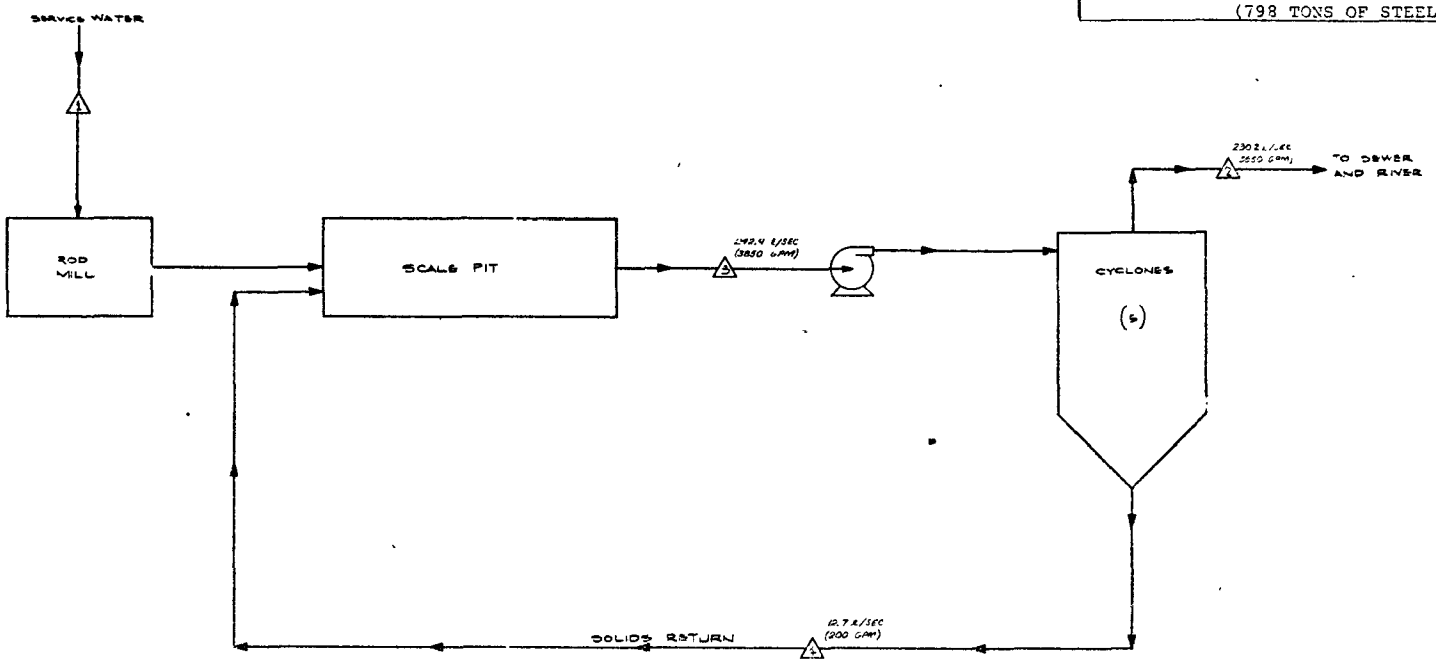

△ SAMPLING POINTS

ENVIRONMENTAL PROTECTION AGENCY
STEEL INDUSTRY STUDY
HOT FORMING
WASTEWATER TREATMENT SYSTEM
WATER FLOW DIAGRAM

4-2-74 FIGURE 28

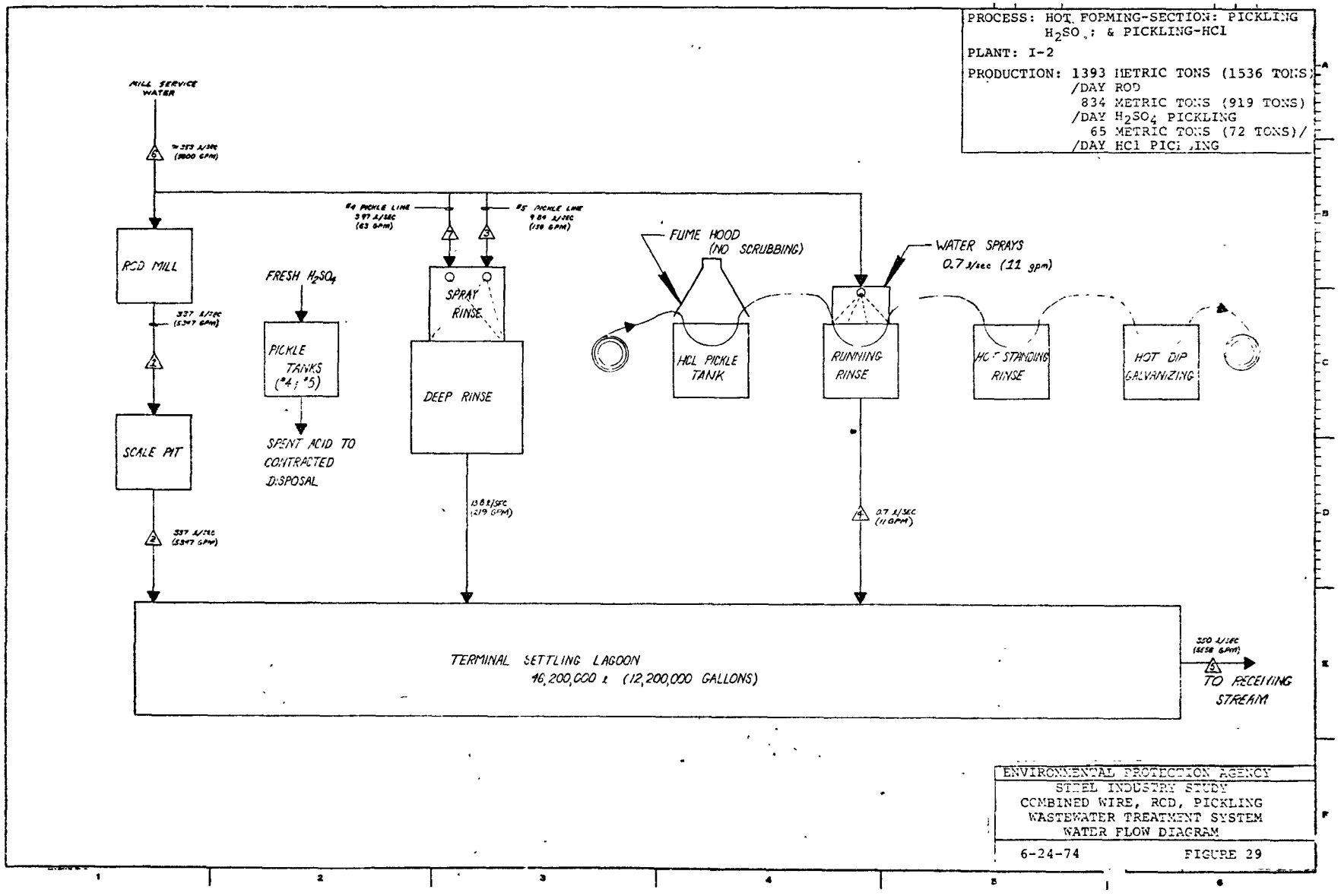
PROCESS: HOT FORMING-SECTION: PICKLING
H_2SO_4 & PICKLING-HCl
PLANT: I-2
PRODUCTION: 1393 METRIC TONS (1536 TONS)
/DAY ROD
834 METRIC TONS (919 TONS)
/DAY H_2SO_4 PICKLING
65 METRIC TONS (72 TONS)/
/DAY HCl PICKLING
MILL SERVICE WATER
#4 PICKLE LINE
#5 PICKLE LINE
ROD MILL
FRESH H_2SO_4
PICKLE TANKS (#4 ; #5)
SPENT ACID TO CONTRACTED DISPOSAL
SPRAY RINSE
DEEP RINSE
SCALE PIT
FUME HOOD (NO SCRUBBING)
HCL PICKLE TANK
WATER SPRAYS
0.7 l/sec (11 gpm)
RUNNING RINSE
HOT STANDING RINSE
HOT DIP GALVANIZING
TERMINAL SETTLING LAGOON
16,200,000 l (12,200,000 GALLONS)
TO RECEIVING STREAM
ENVIRONMENTAL PROTECTION AGENCY
STEEL INDUSTRY STUDY
COMBINED WIRE, ROD, PICKLING
WASTEWATER TREATMENT SYSTEM
WATER FLOW DIAGRAM
6-24-74
FIGURE 29

Plant K-2 - Figure 31. This plant practices primary and secondary clarification, filtration, cooling, and recycle for mill use. Blowdown from system is approximate 3%. Table 51 presents the plants raw waste and effluent loads.

The wastewaters produced are primarily the result of noncontact reheat furnace cooling waters, mill equipment cooling waters, and high pressure water descaling systems. The noncontact reheat furnace cooling waters are typically once-through and discharged to the plant sewers. The mill equipment cooling and high pressure spray descaling waters are discharged to scale pits via flumes and trenches. The scale pits generally contain underflow weirs and launders for trapping of waste oils and greases. The waste oils are skimmed from the scale pit water surfaces by means of belt, rope, or floating type oil skimmers and are pumped to large capacity oil storage tanks where contract haulers periodically remove the accumulated oils. The overflow waters are discharged to the plant sewers, or recycled back to the mill as flushing or sluicing waters in flumes and trenches.

HOT STRIP AND SHEET MILLS

The wastewaters produced are primarily the result of reheat furnace noncontact cooling waters, mill equipment cooling water, high pressure descaling waters, and the hot strip final cooling waters. The reheat furnace noncontact cooling waters are generally once-through and discharged to plant sewer systems. The mill equipment cooling and high pressure descaling waters are discharged to scale pits via trenches and flumes.

The scale pits generally contain underflow weirs and launders to trap waste oils. The waste oils are skimmed from the scale pit water surfaces by means of belt, rope or floating oil skimmers and are pumped to large capacity oil storage tanks where contract haulers periodically remove the accumulated oils. The scale pit overflow waters are generally discharged to plant sewers, or recycled back to the mill versus flushing or sluicing waters in flumes or trenches.

The final strip cooling waters are sometimes recirculated separately and reduced in temperature via cooling towers due to the large quantities of good quality water required. During rolling, about 8% of the cooling water evaporates, and this loss plus the loss across the cooling towers establishes a requirement for makeup water to the system. These waters are generally not contaminated. Blowdown from

PROCESS: HOT FORMING-FLAT - PLATE
PLANT: K-2
PRODUCTION: 2515 METRIC TONS OF STEEL/DAY (2850 TONS OF STEEL/DAY)

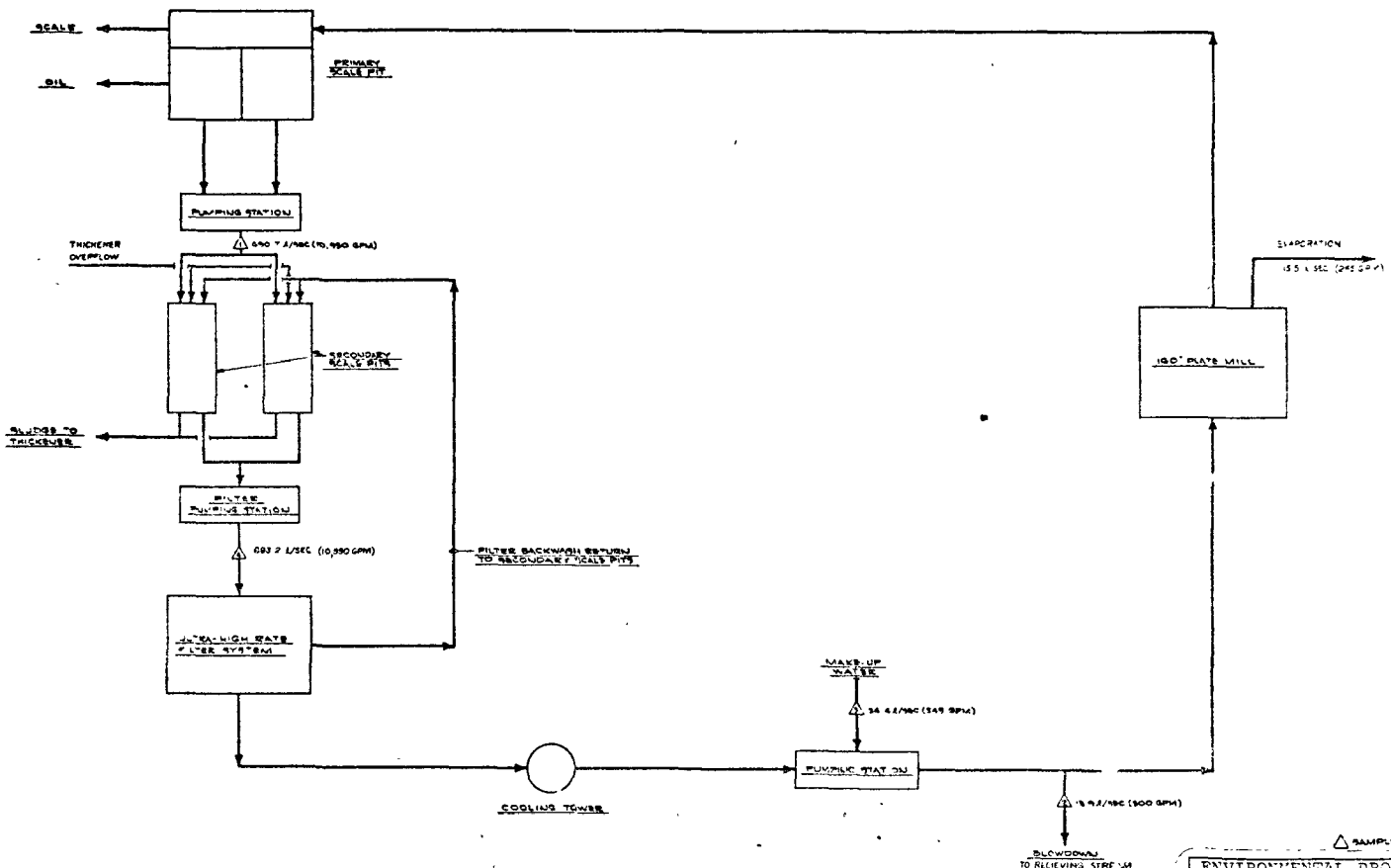

△ SAMPLING POINTS

ENVIRONMENTAL PROTECTION AGENCY
STEEL INDUSTRY STUDY
HOT ROLLING MILL
WASTEWATER TREATMENT SYSTEM
WATER FLOW DIAGRAM

10-10-73 FIGURE 31

TABLE 51
WATER EFFLUENT TREATMENT COSTS
HOT FORMING - FLAT

PLANT	J-2	K-2*	L-2	M-2	N-2	RANGE
INITIAL INVESTMENT	13,370,210	4,053,300		9,497,300	1,815,385	
ANNUAL COSTS:						
OPERATING LABOR	-	502,200	Cost Data Not Supplied By Company	153,392	228,704	
UTILITIES	95,075			177,607		
MAINTENANCE	243,333			185,105		
DEPRECIATION	1,337,021	405,330		949,230	181,538	
COST OF CAPITAL	561,549	170,270		398,887	76,247	
OTHER	89,074	-		6,949	-	
TOTAL	2,326,052	1,077,800		1,871,170	486,489	
$/TON	0.734	1.08		0.548	0.839	0.548-1.08
$/1000 GAL TRT	0.095	0.195		0.065	0.115	0.065-0.195

*Plate mill; all others are strip mills.

AVERAGE NET PLANT RAW WASTE LOAD

PARAMETERS	lb/TON	mg/l	lb/TON	mg/l	lb/TON	mg/l	lb/TON	mg/l	lb/TON	mg/l	lb/TON	mg/l
Flow (gal./ton)	7,708	-	5,533	-	8,205	-	8,437	-	7,273	-	5,533-8,437	-
Suspended Solids	0.409	6	2.622	57	0.752	11	1.73	25	0.848	14	0.409-2.622	6-57
Oil and Grease	0.219	3.4	0.200	4.3	0.294	4.3	0.148	2	0.606	10	0.148-0.606	2-10
pH (units)	-	7.5-8.2	-	7.0	-	7.8	-	8.1-8.4	-	7.4	-	7.0-8.4

AVERAGE GROSS PLANT EFFLUENT WASTE LOAD

PARAMETERS	lb/Ton	mg/l	lb/Ton	mg/l	lb/Ton	mg/l	lb/Ton	mg/l	lb/Ton	mg/l	lb/Ton	mg/l
Flow (gal./ton)	7,708	-	152	-	98**	-	8,437	-	0	-	0-8,437	-
Suspended Solids	0.499	8	0.00505	4	0.00408	5	2.103	30	0	-	0-2.103	0-30
Oil and Grease	0.372	6	0.00796	6.3	0.00645	7.9	0.522	7	0	-	0-0.522	0-7.9
pH (units)	-	8.0-8.2	-	7.2	-	8.6	-	8.1-8.5	-	-	-	7.2-8.6

*Partly reused elsewhere; remainder discharged.

the cooling towers would be required to prevent dissolved solids concentrations from reaching unacceptable levels.

The overflow waters from the scale pits are sometimes pumped back to the mill as flushing or sluicing waters in flumes or trenches. The suspended solids in overflow waters is generally 100-200 mg/l. The waters can be further treated by means of thickeners with chemical coagulation or filtration.

Plant Visits

Visits were made to five plants in this subcategory. Table 8 presents a summary of the plants visited in respect to geographic location, daily production, plant age, and age of the treatment facility. Table 51 presents the plants raw waste and effluent loads.

Plant J-2 - Figure 30. This plant utilizes primary and secondary clarification, chemical treatment, gravity filtration, and discharge to the receiving stream.

Plant L-2 - Figure 32. This plant uses primary clarification including oil skimming, followed by chemical treatment, vacuum filtration, and cooling with partial blowdown. Treated water is reused in mill and elsewhere in plant as makeup and noncontact cooling water.

Plant M-2 - Figure 33. This plant utilizes primary clarification including oil skimming, following by chemical treatment, clarification, filtration, and discharge to receiving stream.

Plant N-2 - Figure 34. This plant practices primary clarification, high flow sand filtration, cooling, and total recycle to mill.

PIPE AND TUBE MILLS - HOT WORKED

The wastewaters produced are primarily the result of equipment water cooling and product water cooling.

Butt Welded Pipe Mills

The butt welded pipe mills' wastewaters are from the cooling waters used in reheat furnaces, cooling waters in welding and drawing operation, and mill bed cooling boshes. The waters are generally discharged to scale pits or sumps where most of the suspended solids are settled out. The scale pits have underflow weirs and launders for trapping any oils

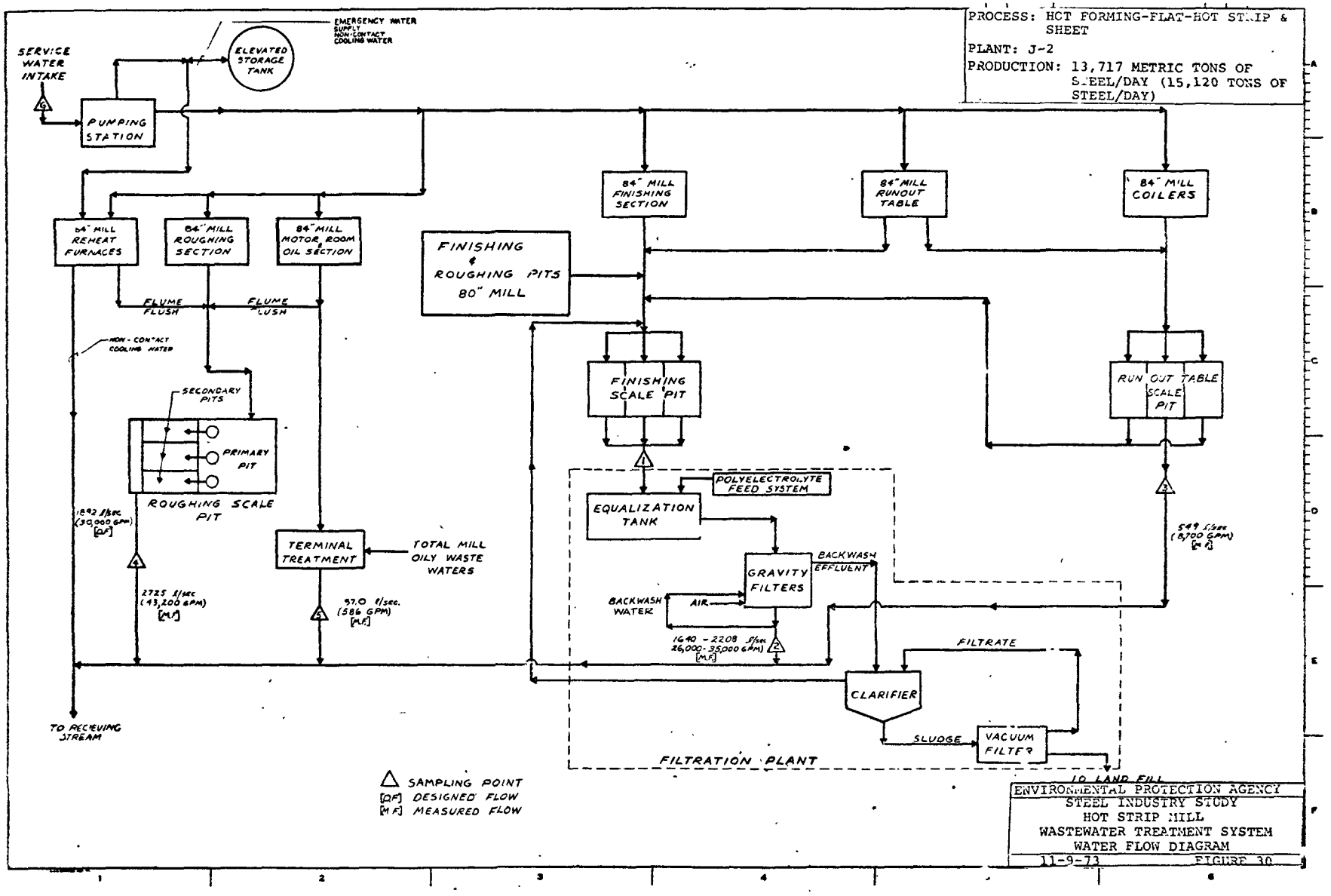
PROCESS: HOT FORMING-FLAT-HOT STRIP & SHEET
PLANT: J-2
PRODUCTION: 13,717 METRIC TONS OF STEEL/DAY (15,120 TONS OF STEEL/DAY)
EMERGENCY WATER SUPPLY NON-CONTACT COOLING WATER
SERVICE WATER INTAKE
ELEVATED STORAGE TANK
PUMPING STATION
84" MILL REHEAT FURNACES
84" MILL ROUGHING SECTION
84" MILL MOTOR ROOM OIL SECTION
84" MILL FINISHING SECTION
84" MILL RUNOUT TABLE
84" MILL COILERS
FINISHING & ROUGHING PITS 80" MILL
FLUME FLUSH
FLUME FLUSH
NON-CONTACT COOLING WATER
SECONDARY PITS
PRIMARY PIT
ROUGHING SCALE PIT
FINISHING SCALE PIT
RUN OUT TABLE SCALE PIT
POLYELECTROLYTE FEED SYSTEM
EQUALIZATION TANK
GRAVITY FILTERS
BACKWASH EFFLUENT
BACKWASH WATER
AIR
TERMINAL TREATMENT
TOTAL MILL OILY WASTE WATERS
1892 l/sec. (30,000 GPM) [DF]
2725 l/sec (43,200 GPM) [MF]
97.0 l/sec. (586 GPM) [MF]
549 l/sec (8,700 GPM) [MF]
1640 - 2208 l/sec 26,000-35,000 GPM) [MF]
CLARIFIER
FILTRATE
SLUDGE
VACUUM FILTER
TO LAND FILL
FILTRATION PLANT
TO RECIEVING STREAM
△ SAMPLING POINT
[DF] DESIGNED FLOW
[MF] MEASURED FLOW
ENVIRONMENTAL PROTECTION AGENCY
STEEL INDUSTRY STUDY
HOT STRIP MILL
WASTEWATER TREATMENT SYSTEM
WATER FLOW DIAGRAM
11-9-73
FIGURE 30

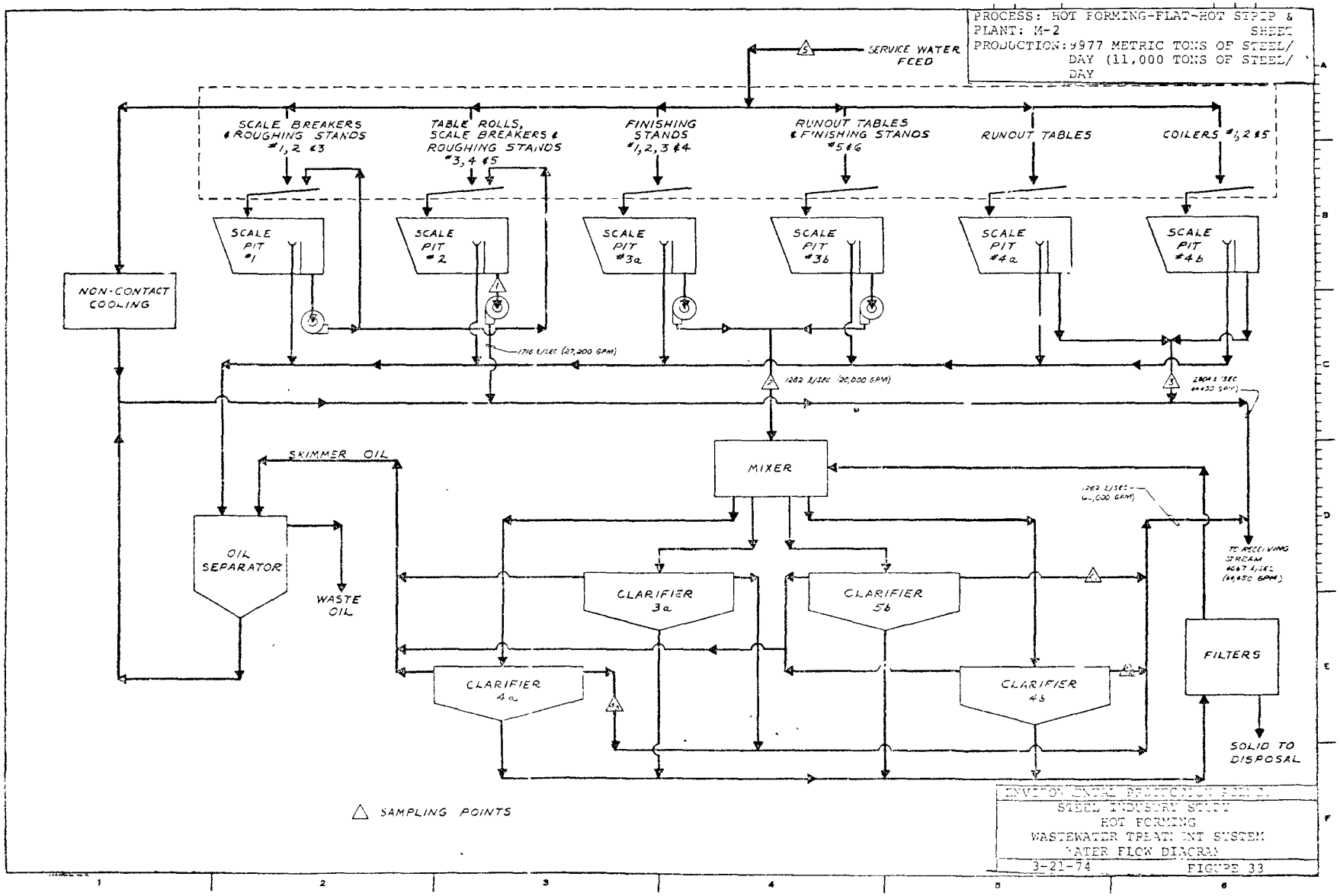
PROCESS: HOT FORMING-FLAT-HOT STRIP &
PLANT: M-2 SHEET
PRODUCTION: 9977 METRIC TONS OF STEEL/ DAY (11,000 TONS OF STEEL/ DAY
SERVICE WATER FEED
SCALE BREAKERS & ROUGHING STANDS #1, 2 & 3
TABLE ROLLS, SCALE BREAKERS & ROUGHING STANDS #3, 4 & 5
FINISHING STANDS #1, 2, 3 & 4
RUNOUT TABLES & FINISHING STANDS #5 & 6
RUNOUT TABLES
COILERS #1, 2 & 5
SCALE PIT #1
SCALE PIT #2
SCALE PIT #3a
SCALE PIT #3b
SCALE PIT #4a
SCALE PIT #4b
NON-CONTACT COOLING
1716 L/SEC (27,200 GPM)
1262 L/SEC (20,000 GPM)
SKIMMER OIL
MIXER
OIL SEPARATOR
WASTE OIL
CLARIFIER 3a
CLARIFIER 3b
CLARIFIER 4a
CLARIFIER 4b
FILTERS
SOLID TO DISPOSAL
TO RECEIVING STREAM
△ SAMPLING POINTS
STEEL INDUSTRY STUDY
HOT FORMING
WASTEWATER TREATMENT SYSTEM
WATER FLOW DIAGRAM
3-21-74
FIGURE 33

PROCESS: HOT FORMING-FLAT-HOT STRIP & SHEET
PLANT: N-2
PRODUCTION: 1796 METRIC TONS OF STEEL/DAY (1980 TONS OF STEEL/DAY

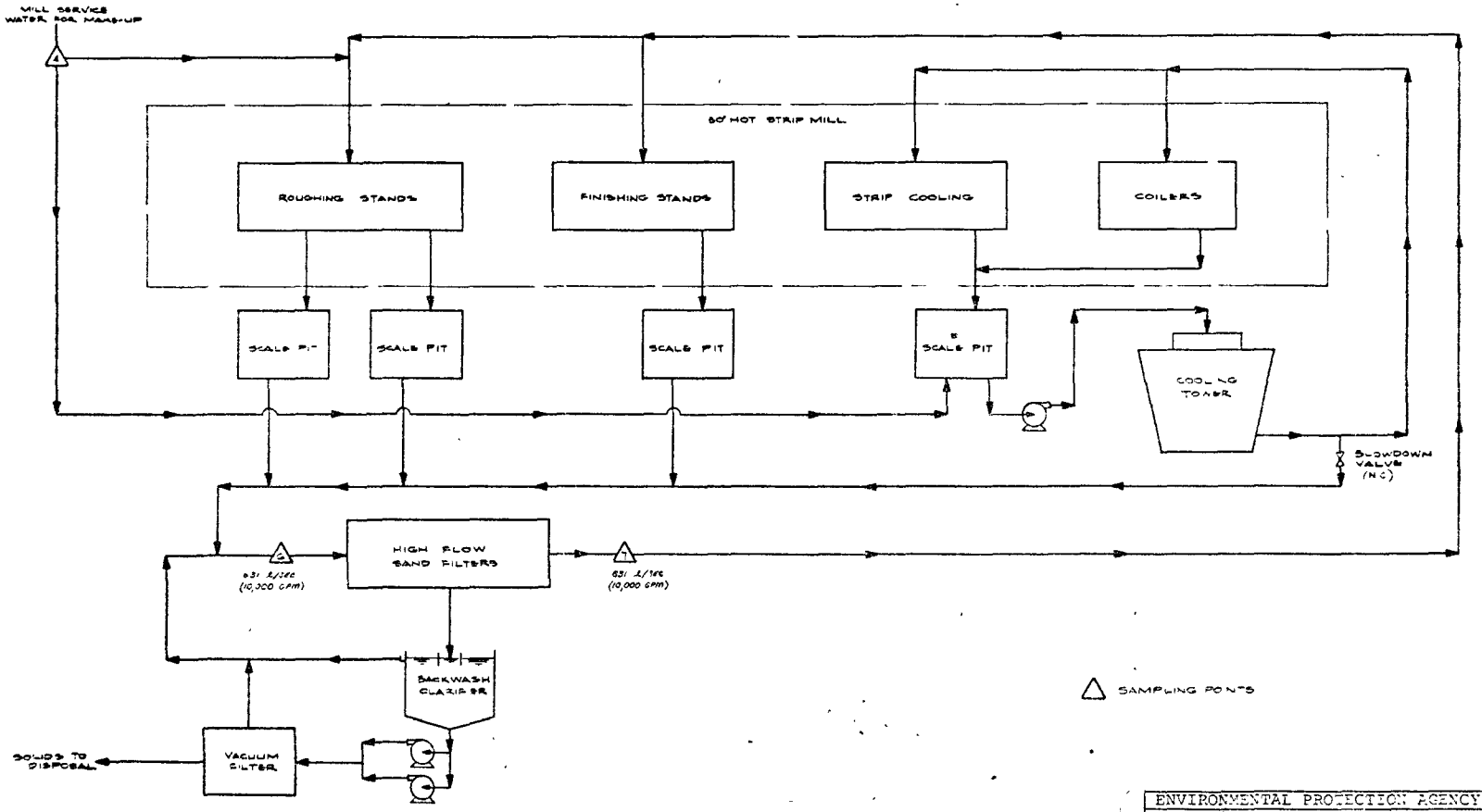

ENVIRONMENTAL PROTECTION AGENCY
STEEL INDUSTRY STUDY
HOT FORMING
WASTEWATER TREATMENT SYSTEM
WATER FLOW DIAGRAM

4-6-74 FIGURE 34

or greases. The oils are removed from the water surface by means of belt, rope, or floating oil skimmers and discharged to waste oil collection tanks. The scale pit overflow waters are discharged to plant sewers.

Electric Resistance Welded Pipe Mills

The wastewaters from these pipe mills result from noncontact equipment cooling waters which are discharged to plant sewers and water soluble oil spray cooling waters used on the pipe after the seam has been welded. These soluble water oil systems are recycle systems with filtration. These water systems are makeup systems.

Seamless Tube Mills

Seamless tube wastewaters result from noncontact cooling waters on piercing mandrels, sizing mandrels, reheat furnaces, etc. The waters are discharged to the plant sewers.

Direct contact spray water mill equipment cooling is the other source of wastewater. These waters are discharged to scale pits for sedimentation of solids. Oils and greases are trapped by underflow weirs and launders. The oil is skimmed from the water surfaces by means of belt, rope, or floating oil skimmers. The overflow waters from scale pits are discharged to plant sewers.

Plant Visits

Visits were made to five hot worked pipe and tube mills. Table 9 presents a summary of the plants visited in respect to geographic location, daily production, plant age, and age of the treatment facility. Table 52 presents the plants raw waste and effluent loads.

Plant E-2 - Figure 25. This plant utilizes primary settling of mill wastes followed by secondary clarification, sand filtration, cooling, and recycle for use by two hot forming - section mills. Blowdown from the overall system is less than 4%.

Plant GG-2 - Figure 35. This plant utilizes primary sedimentation, oil separation, and recycle to pond for mill use.

Plant II-2 - Figure 36. Wastewaters at this plant are treated by sedimentation, oil skimming, filtration, final settling lagoon, and discharge to receiving stream.

TABLE 52
WATER EFFLUENT TREATMENT COSTS
PIPE & TUBES

PLANT	E-2*	GG-2	HH-2	II-2		RANGE
INITIAL INVESTMENT	795,091	-	-	355,600		
ANNUAL COSTS:						
OPERATING LABOR	8,001			2,500		
UTILITIES	17,889	Cost Data	Cost Data	5,330		
MAINTENANCE	4,939	Not Supplied	Not Supplied	-		
DEPRECIATION	79,509	By Company	By Company	35,560		
COST OF CAPITAL	33,394			14,940		
OTHER	75			-		
TOTAL	143,807			58,330		
$/TON	0.841			0.343		0.084-0.841
$/1000 GAL TRT	0.066			0.093		0.066-0.163

*Portion attributed to this subcategory only.

AVERAGE NET PLANT RAW WASTE LOAD

PARAMETERS	lb/TON	mg/l	lb/TON	mg/l	lb/TON	mg/l	lb/TON	mg/l	lb/TON	mg/l	lb/TON	mg/l
Flow (gal./ton)	12,771	-	1,700	-	5,760	-	3,686	-			515-12,771	-
Suspended Solids	2.872	27	0.566	40	0.912	19	1.543	50			0.262-2.872	19-103
Oil and Grease	1.426	13.4	0.103	7.3	2.93	61	0	0			(-0.0129)-2.93	(-3)-61
pH (units)	-	8.2	-	7.3	-	5.5-6.3	-	7.2			-	5.5-8.2

AVERAGE GROSS PLANT EFFLUENT WASTE LOAD

PARAMETERS	lb/Ton	mg/l	lb/Ton	mg/l	lb/Ton	mg/l	lb/Ton	mg/l	lb/Ton	mg/l	lb/Ton	mg/l
Flow (gal./ton)	12,771	-	0	-	0	-	3,686	-			0-12,771	-
Suspended Solids	1.064	10	0	0	0	0	1.044	34			0-1.064	0-116
Oil and Grease	1.042	9.8	0	0	0	0	0.0614	2.0			0-1.042	0-9.8
pH (units)	-	8.3	-	-	-	-	-	7.7			-	7.0-8.3

TABLE 52 (Cont'd)
WATER EFFLUENT TREATMENT COSTS
PIPE & TUBES

PLANT	JJ-2	KK-2				RANGE
INITIAL INVESTMENT	52,364	8,840				
ANNUAL COSTS:						
OPERATING LABOR	3,704	6,670				
UTILITIES	9,444	910				
MAINTENANCE	4,630	1,850				
DEPRECIATION	5,236	884				
COST OF CAPITAL	2,200	376				
OTHER	-	-				
TOTAL	25,214	10,690				
$/TON	0.360	0.084				0.084-0.841
$/1000 GAL TRT	0.157	0.163				0.066-0.163

AVERAGE NET PLANT RAW WASTE LOAD

PARAMETERS	lb/TON	mg/l	lb/TON	mg/l	lb/TON	mg/l	lb/TON	mg/l	lb/TON	mg/l	lb/TON	mg/l
Flow (gal./ton)	2,293	-	515	-							515-12,771	-
Suspended Solids	1.968	103	0.262	61							0.262-2.872	19-103
Oil and Grease	0.112	6	-0.0129	-3							(-0.0129)-2.93	(-3)-61
pH (units)	-	6.9	-	6.9							-	5.5-8.2

AVERAGE GROSS PLANT EFFLUENT WASTE LOAD

PARAMETERS	lb/Ton	mg/l	lb/Ton	mg/l	lb/Ton	mg/l	lb/Ton	mg/l	lb/Ton	mg/l	lb/Ton	mg/l
Flow (gal./ton)	0	-	515	-							0-12,771	-
Suspended Solids	0	0	0.498	116							0-1.064	0-116
Oil and Grease	0	0	0.0300	7							0-1.042	0-9.8
pH (units)	-	-	-	7.0							-	7.0-8.3

PROCESS: PIPE & TUBES-
PLANT: GG-2
PRODUCTION: 211 METRIC TONS OF STEEL/DAY
(233 TONS OF STEEL/DAY)

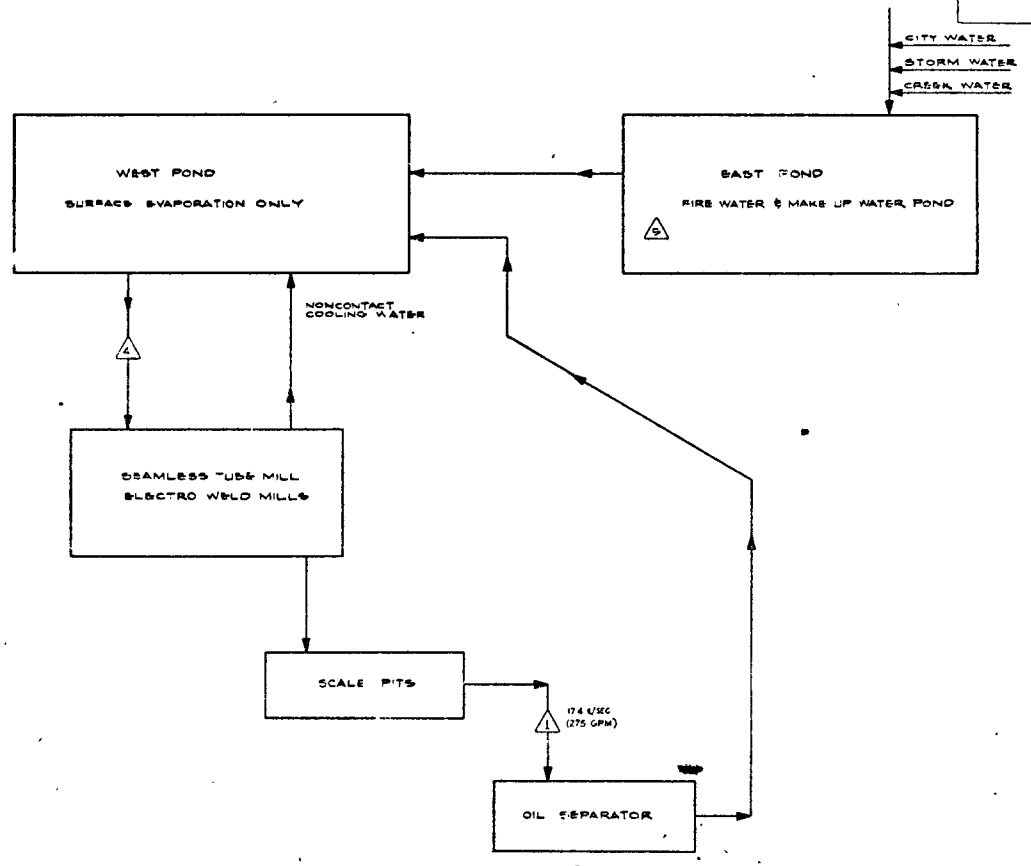

△ SAMPLING POINTS

ENVIRONMENTAL PROTECTION AGENCY
STEEL INDUSTRY STUDY
PIPE & TUBE MILL
WASTEWATER TREATMENT SYSTEM
WATER FLOW DIAGRAM

5-6-74 FIGURE 35

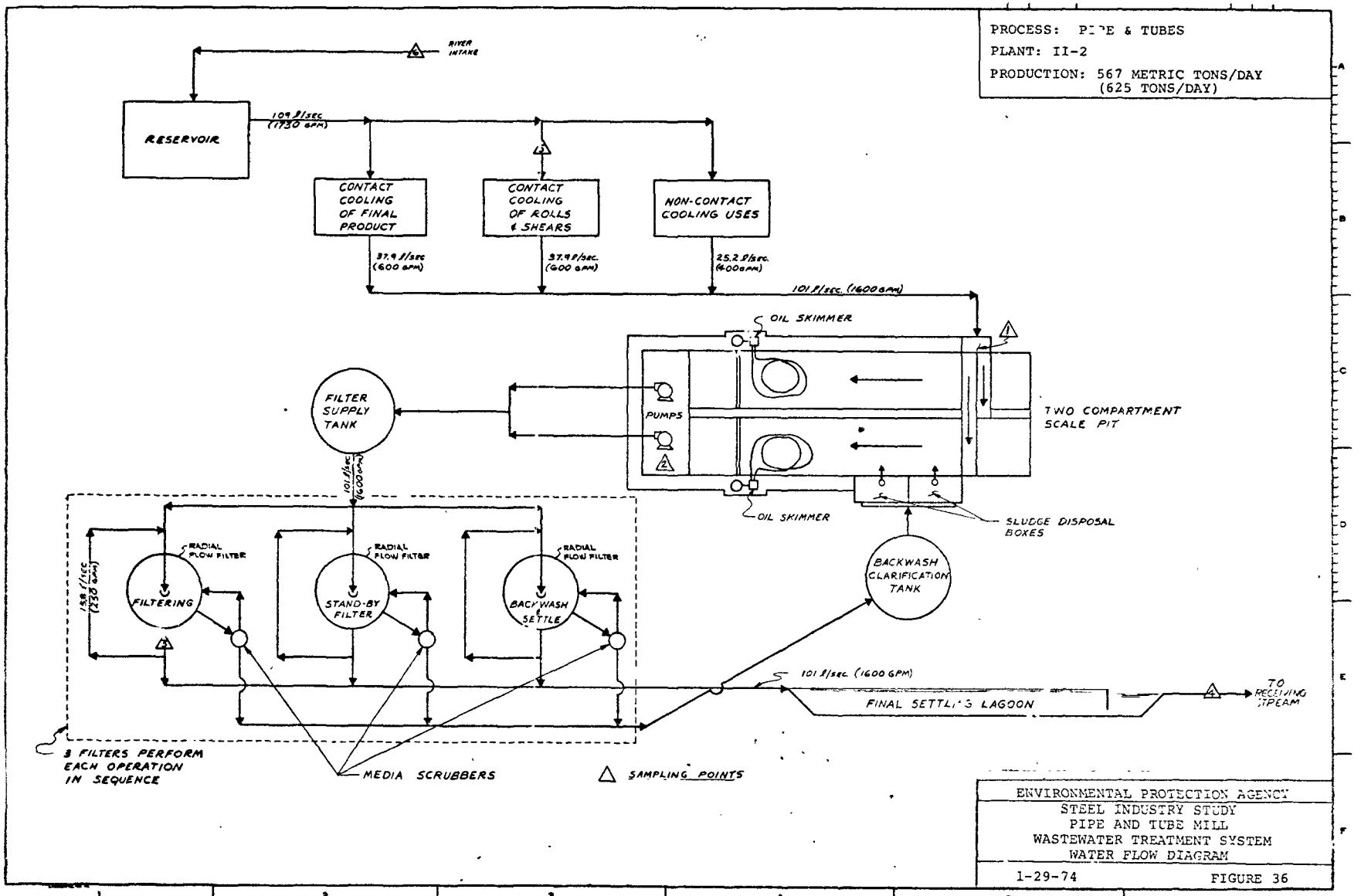
PROCESS: PIPE & TUBES
PLANT: II-2
PRODUCTION: 567 METRIC TONS/DAY (625 TONS/DAY)
RIVER INTAKE
RESERVOIR
109 l/sec (1730 GPM)
CONTACT COOLING OF FINAL PRODUCT
CONTACT COOLING OF ROLLS & SHEARS
NON-CONTACT COOLING USES
37.9 l/sec (600 GPM)
37.9 l/sec. (600 GPM)
25.2 l/sec. (400 GPM)
101 l/sec. (1600 GPM)
OIL SKIMMER
FILTER SUPPLY TANK
PUMPS
TWO COMPARTMENT SCALE PIT
OIL SKIMMER
SLUDGE DISPOSAL BOXES
101 l/sec (1600 GPM)
RADIAL FLOW FILTER
RADIAL FLOW FILTER
RADIAL FLOW FILTER
FILTERING
STAND-BY FILTER
BACK WASH & SETTLE
BACKWASH CLARIFICATION TANK
151 l/sec (2390 GPM)
101 l/sec (1600 GPM)
FINAL SETTLING LAGOON
TO RECEIVING STREAM
3 FILTERS PERFORM EACH OPERATION IN SEQUENCE
MEDIA SCRUBBERS
SAMPLING POINTS
ENVIRONMENTAL PROTECTION AGENCY
STEEL INDUSTRY STUDY
PIPE AND TUBE MILL
WASTEWATER TREATMENT SYSTEM
WATER FLOW DIAGRAM
1-29-74
FIGURE 36

Plant JJ-2 - Figure 37. Wastewaters at this plant are treated by primary sedimentation, mixing with acid rinses, lagooned for evaporative cooling, and recycled for plant reuse.

Plant KK-2 - Figure 38. This plant practices primary and secondary sedimentation, oil separation, polyelectrolyte addition, and discharge to receiving stream.

PIPE AND TUBE MILLS - COLD WORKED

Plant Visits

A visit was made to one cold worked pipe and tube mill. Table 10 presents a summary of the plant visited in respect to geographic location, daily product, plant age, and age of the treatment facility. Table 52 presents the plants raw waste and effluent loads.

Plant HH-2 - Figure 39. This plant has an excellent total recycle system. Wastewaters are settled in ponds and then returned to reservoir for process reuse throughout the plant.

PICKLING

Several different treatment systems have been used throughout the years in dealing with the liquid discharges associated with the pickling process. They may be grouped into two general classes: disposal processes; and recycling processes.

Disposal Processes

1. Dumping to a waterway
2. Dumping on an alkaline bed
3. Contract hauling
4. Dumping into municipal treatment facilities
5. Simple neutralization
6. Modified neutralization
7. Controlled neutralization/oxidation
8. Deep well disposal

None of these methods offers the ideal answer for the treatment of this wastewater.

Dumping, hauling, and deep well injection move the contaminants from one place to another and, therefore, only relocate the pollution problem. Neutralization destroys valuable materials which could have been recycled.

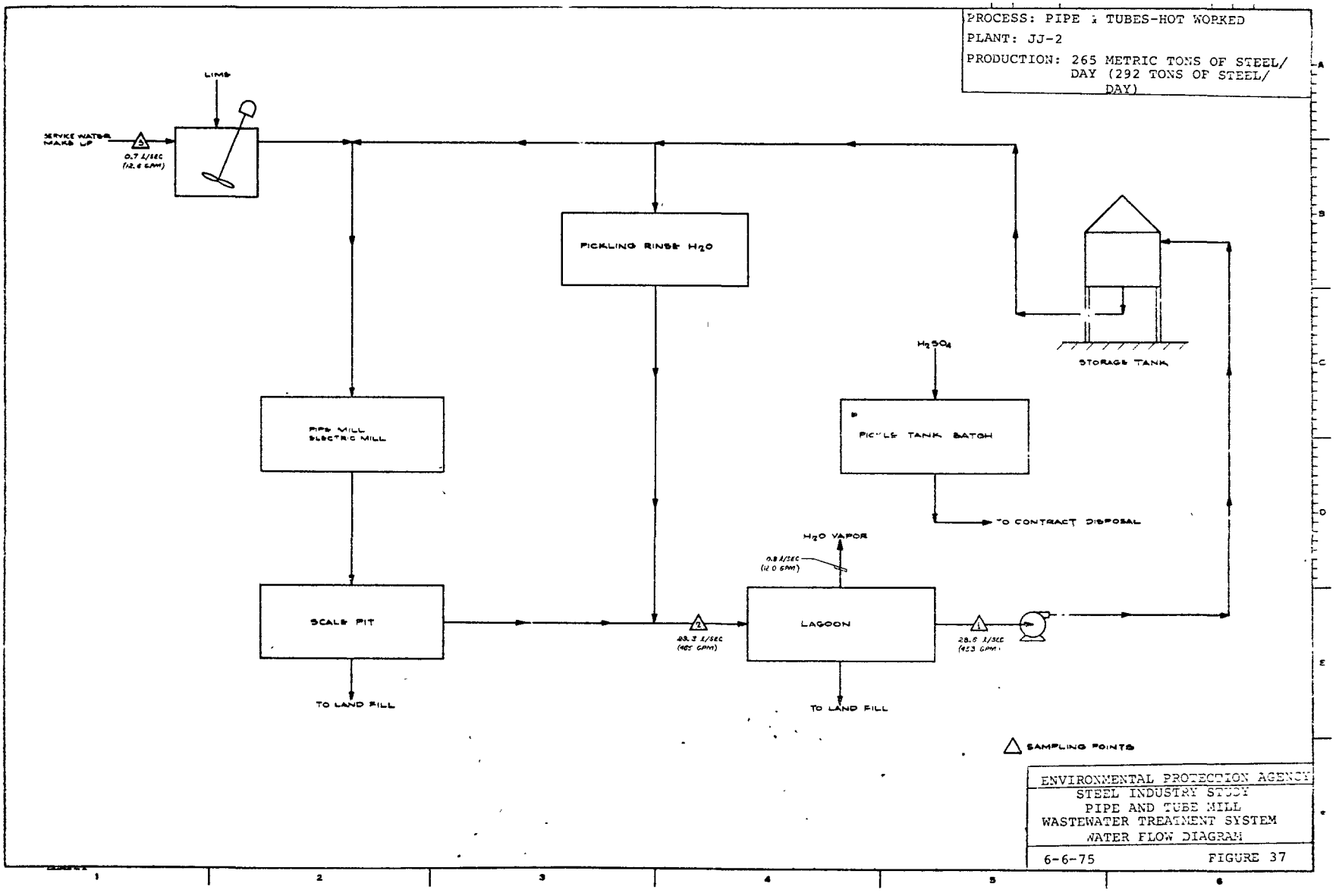
PROCESS: PIPE & TUBES-HOT WORKED
PLANT: JJ-2
PRODUCTION: 265 METRIC TONS OF STEEL/ DAY (292 TONS OF STEEL/ DAY)
LIME
SERVICE WATER MAKE UP
0.7 L/SEC (12.6 GPM)
PICKLING RINSE H_2O
STORAGE TANK
H_2SO_4
PIPE MILL ELECTRIC MILL
PICKLE TANK BATCH
TO CONTRACT DISPOSAL
H_2O VAPOR
0.8 L/SEC (12.0 GPM)
SCALE PIT
LAGOON
28.3 L/SEC (405 GPM)
28.6 L/SEC (453 GPM)
TO LAND FILL
TO LAND FILL
SAMPLING POINTS
ENVIRONMENTAL PROTECTION AGENCY
STEEL INDUSTRY STUDY
PIPE AND TUBE MILL
WASTEWATER TREATMENT SYSTEM
WATER FLOW DIAGRAM
6-6-75
FIGURE 37

PROCESS: PIPES & TUBES-HOT WORKED
PLANT: KK-2
PRODUCTION: 465 METRIC TONS OF STEEL/DAY (512.5 TONS OF STEEL/DAY)

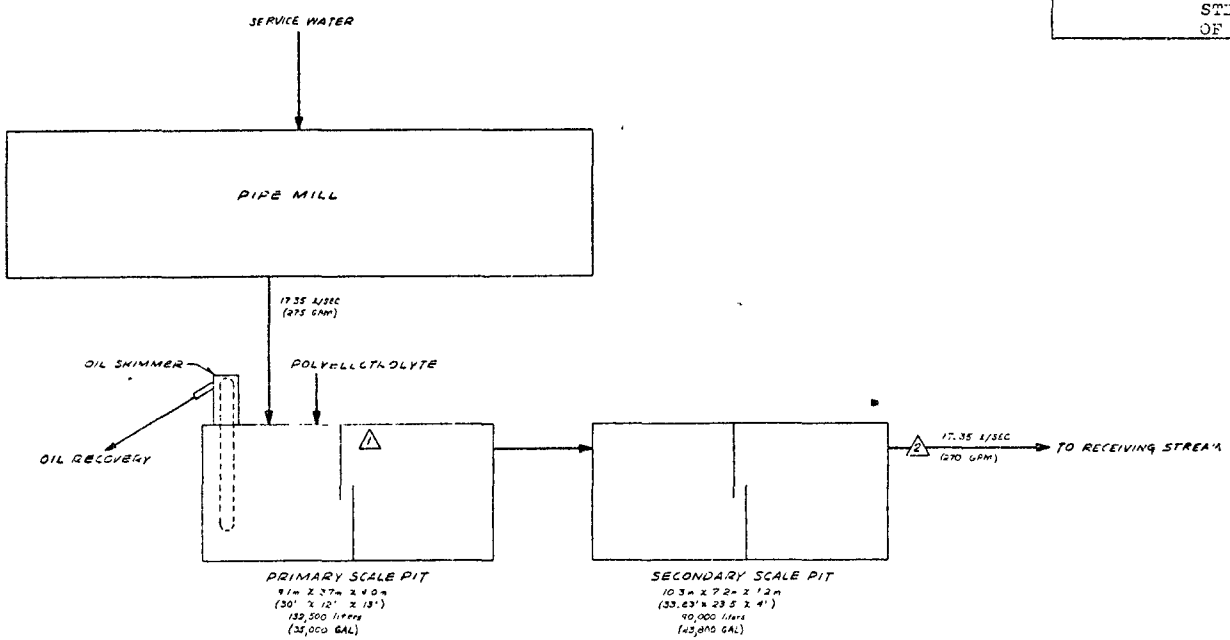

△ SAMPLING POINTS

ENVIRONMENTAL PROTECTION AGENCY
STEEL INDUSTRY STUDY
PIPE AND TUBE MILL
WASTEWATER TREATMENT SYSTEM
WATER FLOW DIAGRAM

6/6/75 FIGURE 38

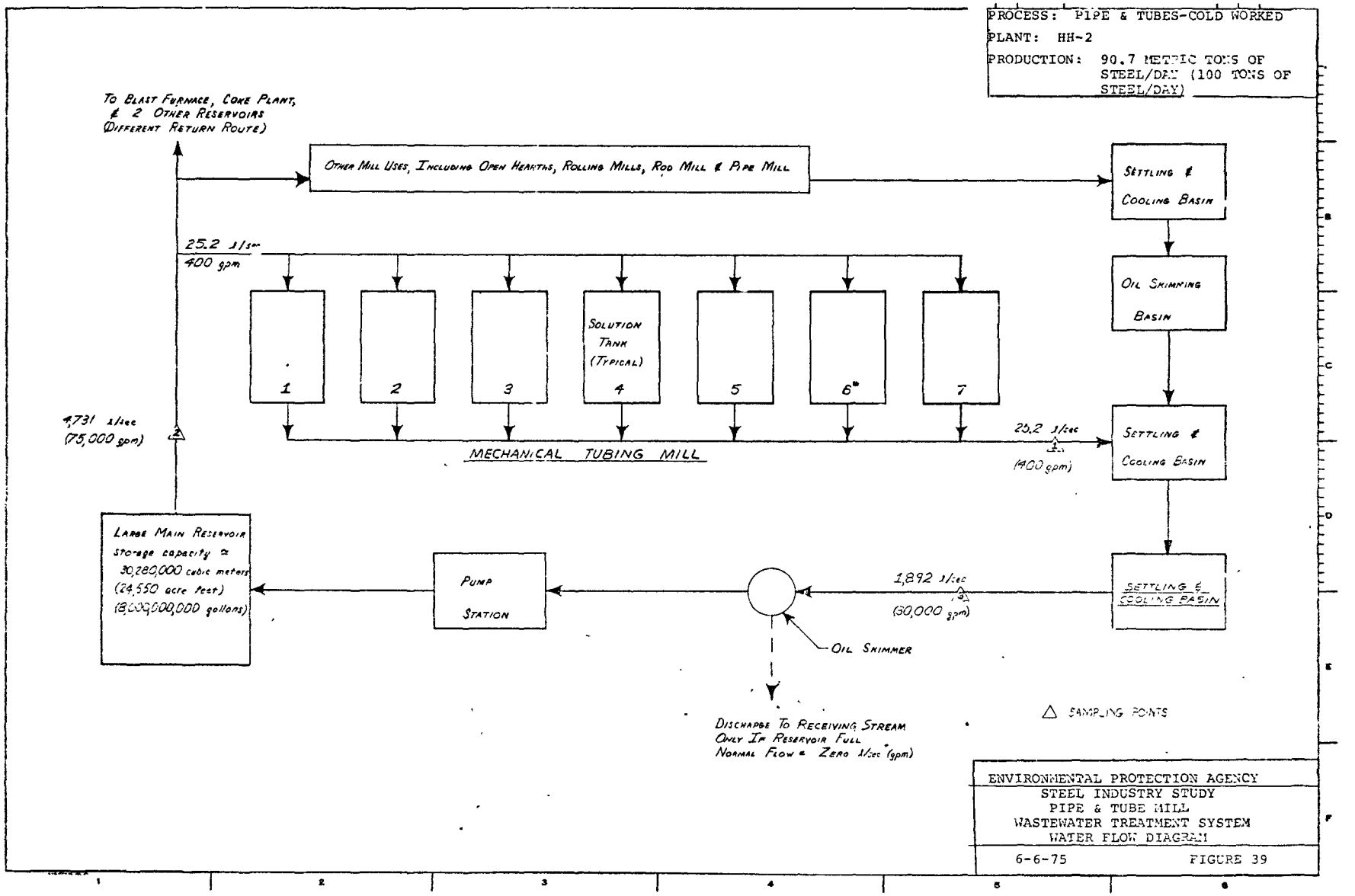
PROCESS: PIPE & TUBES-COLD WORKED
PLANT: HH-2
PRODUCTION: 90.7 METRIC TONS OF STEEL/DAY (100 TONS OF STEEL/DAY)
TO BLAST FURNACE, COKE PLANT, & 2 OTHER RESERVOIRS (DIFFERENT RETURN ROUTE)
OTHER MILL USES, INCLUDING OPEN HEARTHS, ROLLING MILLS, ROD MILL & PIPE MILL
SETTLING & COOLING BASIN
OIL SKIMMING BASIN
25.2 l/sec
400 gpm
SOLUTION TANK (TYPICAL)
1
2
3
4
5
6*
7
4,731 l/sec
(75,000 gpm)
MECHANICAL TUBING MILL
25.2 l/sec
(400 gpm)
SETTLING & COOLING BASIN
LARGE MAIN RESERVOIR
Storage capacity =
30,280,000 cubic meters
(24,550 acre feet)
(8,000,000,000 gallons)
PUMP STATION
1,892 l/sec
(30,000 gpm)
SETTLING & COOLING BASIN
OIL SKIMMER
DISCHARGE TO RECEIVING STREAM ONLY IF RESERVOIR FULL NORMAL FLOW = ZERO l/sec (gpm)
△ SAMPLING POINTS
ENVIRONMENTAL PROTECTION AGENCY
STEEL INDUSTRY STUDY
PIPE & TUBE MILL
WASTEWATER TREATMENT SYSTEM
WATER FLOW DIAGRAM
6-6-75
FIGURE 39

It also will produce a sludge or semi-solid which, when improperly handled, can cause serious land pollution problems. In addition, many neutralized discharges contain high concentrations of dissolved solids, usually sodium or calcium sulfate or chlorides.

However, in relation to one another, each has its advantages and disadvantages. Each method deserves separate discussion. All are pontentially subject to regulation by permit authorities on local or national level.

Dumping to a Waterway. This method includes dumping directly or indirectly into streams, rivers, lakes, including barging or piping to sea.

Disadvantages. Water pollution and community objections. This method simply moves the pollutant from one place to another. No recovery of products.

Advantages. Low investment cost. Low operating cost.

Remarks. The dissolved iron salts are more objectionable in most cases than the free acid. The iron causes a brown discoloration of the water and objectionable slime deposits. Ferrous iron exerts a high oxygen demand, which totally depletes the dissolved oxygen of the receiving stream.

Dumping on an Alkaline Bed. This method includes dumping onto piles of oyster shells, steel mill slag, or other alkaline materials.

Disadvantages. Only part of the free acid is normally neutralized and the dissolved iron runs off. No recovery of products.

Advantages. No investment cost. Low operating cost.

Remarks. The pollution problem of color and slime from iron remains unsolved. Free acid and dissolved iron can contaminate ground waters or surface waters.

Contract Hauling. It is assumed that this method includes the subsequent proper treatment of the waste by the contract hauler. Therefore, the cost would include hauling (transportation) and treatment.

Disadvantages. High unit cost. Contract hauling costs generally range upwards from $0.03 per gal. The producer of the waste remains legally responsible for the manner of

ultimate disposal and any resultant pollution. No recovery of products.

Advantages. Low investment cost. This is frequently the least expensive method of disposal for small volumes of waste if the contractor is reliable and applies approved treatment technology.

Remarks. The producer is directly dependent upon the reliability of the contract hauler.

Dumping into Municipal Treatment Facilities. Some pickling operations dump their liquid discharges, either treated or untreated, directly into municipal sewer systems.

Disadvantages. Limited to small quantities. Waste pickle liquor generally has to be partially neutralized with soda ash, caustic soda or ammonia. In some cases, could impose unnecessarily excessive loads on the municipal system. No recovery of products.

Advantages. Low investment cost. Modest operating cost.

Remarks. Neutralization of the free acid, but not the ferrous sulfate, will generally be required.

Simple Neutralization. A commonly used treatment is neutralization of the spent pickle solutions with treatment chemicals. This approach is intended to raise the pH to about 7, so that a neutral liquid can be discharged.

Disadvantages. Problems arise in the disposal of the resultant sludge. Ferrous hydroxide in the neutralized mixture is extremely difficult to settle and the sludge must be pumped into lagoons where it has to be kept indefinitely. This is no small problem. The pickling of 1,000,000 tons of steel can result -- if neutralization is used on the spent liquor -- in the production of 200,000 tons of sludge that will not dewater. The sludge requires 150 acre feet of permanent fill volume and high freight or real estate costs. Simple neutralization may cost from $0.02 to $0.05 per gal. No recovery of products.

Advantages. Low to medium cost initial investment. Operating cost is usually less expensive than contract hauling for large volumes.

Remarks. Simple neutralization techniques will probably not meet the future effluent discharge standards as far as dissolved solids are concerned, especially iron.

Modified Neutralization. This method is simple neutralization plus the filtration of the resultant iron hydroxide sludge.

Disadvantages. Medium to high investment costs. High operating costs. Increased operating complexity. No recovery of products.

Advantages. Some water can be sewered, thus reducing sludge freight.

Remarks. Filter cake contains 1 to 2 lb of water per lb of solids and is slow drying unless spread over a large area. Runoff or seepage from filter cake dumping ground will contain iron contaminants.

Controlled Neutralization/Oxidation. This method is more acceptable than simple neutralization because it neutralizes the solution to a pH of 7 to 9, and then oxidizes the resultant ferrous hydroxide to magnetic iron oxide (magnetite) and water. Thus, the usual hydroxide sludge problem is avoided.

Disadvantages. High investment cost. High operating cost. Increased operating complexity, requiring sophisticated process and equipment. High temperature and relatively long retention time required in the process.

Advantages. Easy-to-dewater solids. Sludge weight onesixth (1/6) that of simple neutralization. Recoverable magnetic iron oxide. Solids make good landfill.

Remarks. Solids can be centrifuged to moist earth consistency, or slurry can be piped directly to a natural drainage area for accumulation of solids and decantation of excess water.

Deep Well Disposal. There are several hundred deep injection wells in the United States, but only a dozen or so are used to dispose of waste pickling liquors. Depending upon local conditions and geology, some of these are relatively troublefree in operation and maintenance, and some are extremely troublesome.

Disadvantages. Great depth needed to minimize chance of pollution problems by contaminating ground waters. Medium to high initial investment. Precise filtration required prior to injection. No recovery of products.

Advantages. Elimination of neutralizing costs. Low operating cost. Versatility.

Remarks. Highly dependent on local geology. Great risk is involved because the contaminants may penetrate waterbearing strata. Great care must be taken to avoid pumping too high a solids concentration into the porous starta because it would be very easy to block the strata and force the well to shut down.

Recycling Processes

The only really effective method industry can use to stop pollution is to eliminate discharges from a particular plant or operation. By attacking waste at its source, the potential may exist where pollution control can be converted from a non-productive expense to a cost-cutting, perhaps even profitable, investment.

Any comprehensive solution to this complex problem must simultaneously resolve all related difficulties at one time and in one system. Many attempts have been made in the past to cope with these effluent problems. They have often failed because of inability or refusal to comprehend these separate problems as interdependent aspects of one complex problem.

Conservation by recycling in a "closed-loop" system is an answer. This will minimize the cost and volume of effluents, stop waste and inefficiency, and eliminate discharges of noxious materials from pickling plants. In this way, scale removal operations may become less costly and pollutionfree.

The system should be simple and easy to operate, corrosion resistant and mechanically sound and, most important, be economically viable. Such systems are available and have been proven effective in many pickling operations.

Sulfuric. Most common is acid recovery through removal of ferrous sulfate by crystallization. Spent pickle liquor high in iron content is pumped into a crystallizer where it is cooled, and the iron is crystallized as ferrous sulfate heptahydrate. The crystals are then separated, and the remaining (recovered) acid is pumped back to the pickling tank. The discharge from the system is ferrous sulfate heptahydrate in pure, crystalline form, a chemical byproduct with commerical value. Sale of this chemical may offer potential income where market conditions permit. The crystals are dried, bagged, and marketed, or sold in bulk

quantities. Ferrous sulfate, commonly referred to as "copperas," is used in appreciable quantities in numerous industries, with its most important value in the manufacture of inks, dyes, paints, and fertilizers. Its use as a flocculating agent in waste treatment and sewage plants is exceptionally noteworthy because the demand for this chemical increases constantly as municipal sewage plants improve and expand their treatment facilities.

Hydrochloric. The only existing commercially proven technology at this time for the regeneration of acid from spent hydrochloric acid pickling solutions is through thermal decomposition. The spent pickle liquor contains, essentially, free hydrochloric acid, ferrous chloride, and water. This liquor is generally first heated so that evaporation removes some of the water and thus concentrates the solution. The concentrated solution is subjected to temperatures of about 925° to 1,050°C (1,700° to 1,920°F). At this temperature, evaporation and decomposition takes place. Water is further evaporated and the ferrous chloride decomposes into iron oxide and hydrogen chloride. The iron oxide is separated and removed from the system. The hydrogen chloride gas is reabsorbed into water (sometimes rinse water or scrubber water is used), thus making a reusable hydrochloric acid solution. There are several types of these "roaster" processes available and in operation throughout the world. The basic difference between the processes is the design and operation of the roaster/reactor itself. Each different design, however, seems to have its own distinct advantages and disadvantages associated with it.

Crystallization Processes (Sulfuric Acid)

Continuous Type. There are three acid recovery plants in North America (two in Canada, one in the U.S.A.) at this time employing a continuous vacuum crystallization process. Spent pickle liquor with high iron content is precooled and continuously pumped to a multi-stage crystallizer where it is further cooled by evaporation in a vacuum maintained through high pressure steam ejectors and a mechanical vacuum pump. The acid/crystal slurry is pumped to a concentrator and from there to a centrifuge for crystal separation. The recovered acid is then returned at about 10° to 16°C (50° to 60°F) to the pickling tanks. Regular operator attention is required and a consistent composition of spent pickle liquor is required for its optimum and practical operation.

In order to maintain continuous operation of the vacuum crystallizers, it is necessary to supply those units with a

continuous supply of consistent pickle liquor. This then involves the necessity of adequate storage tanks at each end of the recovery system.

The continuous type process is illustrated in Figure 40.

Batch Type. This process is in successful operation in 17 plants throughout the North American continent on both continuous and batch pickling lines, handling strip, sheets, rods, wire, bar, and other product configurations. In each case, pickling costs were reduced significantly. The oldest such system has been in operation for over seven years. See Figure 41.

The heart of the system is a batch type crystallizer where spent pickling liquor is agitated and cooled through a recirculating chilled water circuit. After separation of crystals by decanting, the recovered acid is reheated to 60° to 65°C (140° to 150°F) prior to return to the pickling tank. The plant is very simple and does not require continuous operator attention.

Acid entrained in the pickling tank exhaust system is removed in the acid mist filter and rinse water is reused in the pickling tank. The system then has "zero liquid discharge."

Where the batch crystallizer is to be used in conjunction with pickling lines that discharge pickle liquor on a continuous basis, or those that dump many various batches of liquor at indeterminate times, a "conditioning holding tank" is added to the system.

This pickling and acid recovery system offers many advantages and features: (a.) purchased acid consumption reduced as much as 50%; (b.) it allows recovery and reuse of significant amounts of inhibitors; (c.) eliminates costs and problems of disposing of spent pickle liquors, rinse waters, and scrubber waters; (d.) shows savings in water costs in rinsing and scrubbing by direct recovery of all of the rinse water (and the acid in it); (e.) it can also offer increased production because of constant optimum pickling conditions; (f.) it lowers operating costs through the simplicity of the system (does not require constant operator attention); (g.) minimizes delay in dumping and making up acid tanks; (h.) eliminates environmental problems indoors and pollution problems outdoors by recovering acid from mist; (i.) trims load on municipal sewers and sewage plants; finally, (j.) most important, it ends water pollution from pickling.

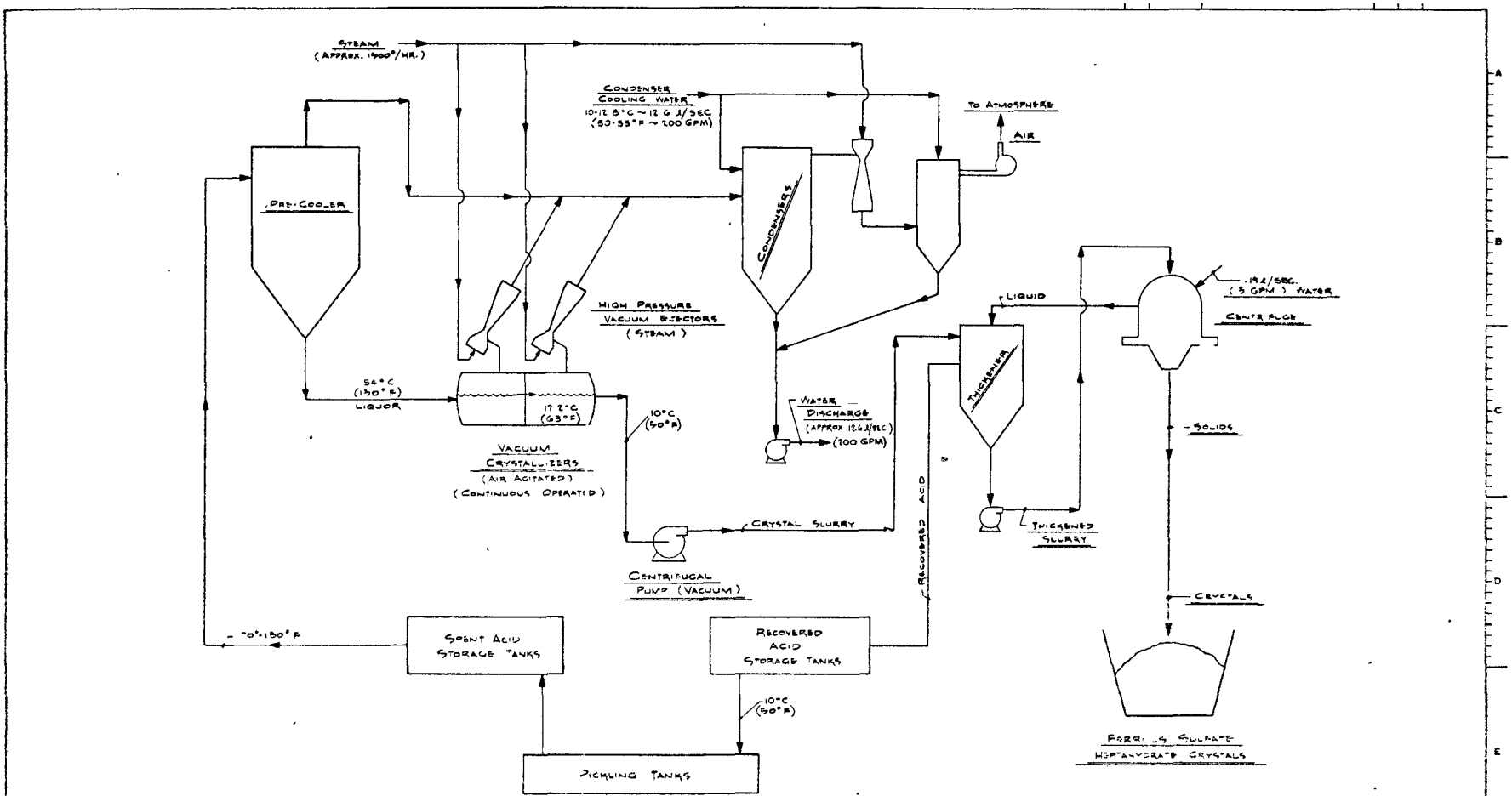

ENVIRONMENTAL PROTECTION AGENCY	
STEEL INDUSTRY STUDY SULFURIC ACID RECOVERY PROCESS FLOW DIAGRAM	
5-13-74	FIGURE 40

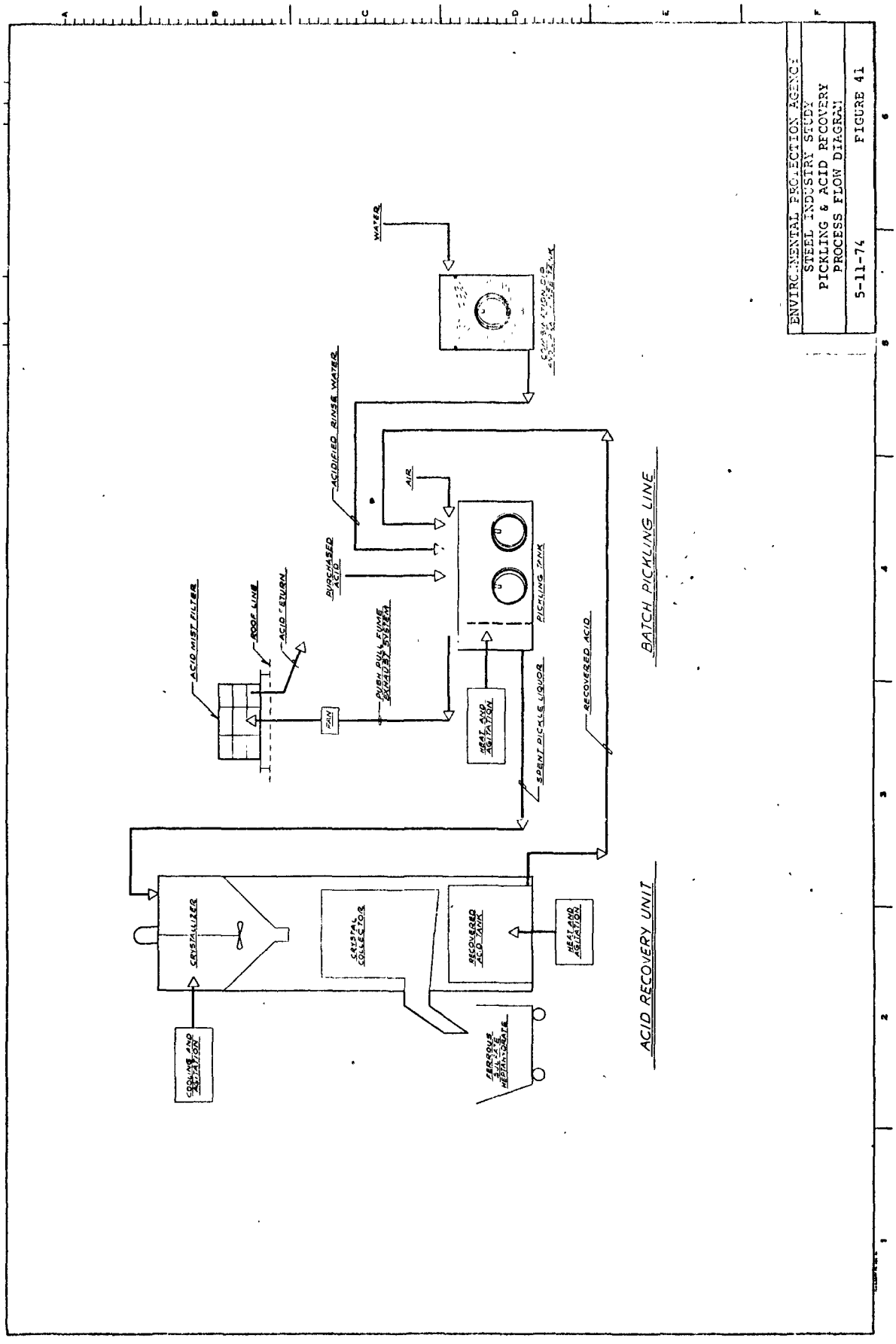
ENVIRONMENTAL PROTECTION AGENCY
STEEL INDUSTRY STUDY
PICKLING & ACID RECOVERY
PROCESS FLOW DIAGRAM
5-11-74
FIGURE 41
WATER
ACIDIFIED RINSE WATER
AIR
REGENERATED ACID
ACID MIST FILTER
ROOF LINE
ACID RETURN
SPENT PICKLE LIQUOR
RECOVERED ACID
PICKLING TANK
BATCH PICKLING LINE
CRYSTALLIZER
CRYSTAL COLLECTOR
RECOVERED ACID TANK
ACID RECOVERY UNIT

The available commercially proven processes under this category are essentially the same, in that each heats the pickle liquor to relatively high temperatures in thermal reactors. At these high temperatures, decomposition occurs yielding iron oxide (ferric oxide, Fe_2O_3), water (vapor), and hydrogen chloric (HCl) gas. Water vapor is scrubbed prior to discharge to atmosphere. Iron oxide particles are separated and discharged from the system. The hydrogen chloride gas is absorbed into water which produces a "regenerated" hydrochloric acid solution, generally from 15% to 21% HCl (by weight). The regenerated acid is then recycled back into the pickling operation.

The two variations of this process that are noteworthy are:

Spray Roaster Type Process. This process incorporates a relatively large roaster vessel which is heated to about 1,000°C (1830°F).

Pickle liquor is pumped at high pressure through filters to the top of each spray roaster, entering through four spray heads, which atomize the pickle liquor. Four natural gas burners, arranged symmetrically around the circumference of the roaster, heat the atomized pickle liquor as it descends in the roaster. As the temperature of the liquid rises, the water and free HCl vaporize yielding steam and hydrogen chloride gas while the iron chloride is converted to iron oxide and hydrogen chloride gas. The relatively heavy iron oxide drops down into the cone of the roaster while the water vapor, hydrogen chloride gas, and products of combustion rise.

To draw the hydrogen chloride gas from the roaster, negative pressure is created by exhaust fans installed in series. The system is made negative to prevent the escape of hydrogen chloride gas should a leak develop in the piping system.

Some of the iron oxide particles are very fine and are carried off the top of the roaster with the discharged roaster gases. These particles are removed by a cyclone installed in the system immediately after the roaster.

The cyclone is located on an elevated platform directly over the oxide storage hopper so that the fine particles of iron oxide fall directly into the storage bin. This arrangement eliminates the difficult problem of conveying these microscopic particles.

To convert the gas to HCl acid, it is passed through an absorber, consisting of a brick lined shell with a carbon grill and ceramic saddles.

The steam and gas enter the bottom and rise through the grill while the water percolates down, condensing the steam and converting the gas to HCl acid. The non-soluble products of combustion go up the stack.

Water is metered to the absorber to produce 20% HCl (by weight). Details of this process are presented on Figure 42.

Fluid-Bed Roaster Type. This is basically the same type of process as the spray roaster type except that the reactor vessel itself is relatively smaller in size than a comparable spray roaster. This is possible because the roaster vessel contains a fluid bed which allows longer retention times because of the bed itself.

Because of the nature of this process using the fluid bed, the resultant iron oxide leaves the system as a small pellet instead of a dust.

Vital plant components are the reactor, a cyclone, a pre-evaporator/venturi scrubber combined with a separator, and an absorber.

The spent pickle liquor to be regenerated is delivered into the combined pre-evaporator/venturi scrubber in which it is concentrated, utilizing the waste heat recovered from the hot gases emitted from the reactor.

The concentrate is subsequently charged into a fluidized bed of granular ferrous oxide maintained at about 800°C. Evaporation of the residual water and decomposition of the ferrous chloride takes place simultaneously. The major portion of Fe_2O_3 clings immediately to the surface of the hot fluidized grains. A residence time of several hours in the bed assures adequate grain growth to a range of 0.2-2.2 mm diameter. The reactor is controlled to a constant fluid bed level.

A small amount of Fe_2O_3 that has not taken part in the grain growth is carried over and subsequently collected in the cyclone and recharged to the reactor. Hot gases leaving the reactor contain hydrochloric acid gas, superheated water vapor, combustion products of the heating medium, and a small amount of ultrafine dust. The dust is washed out in a

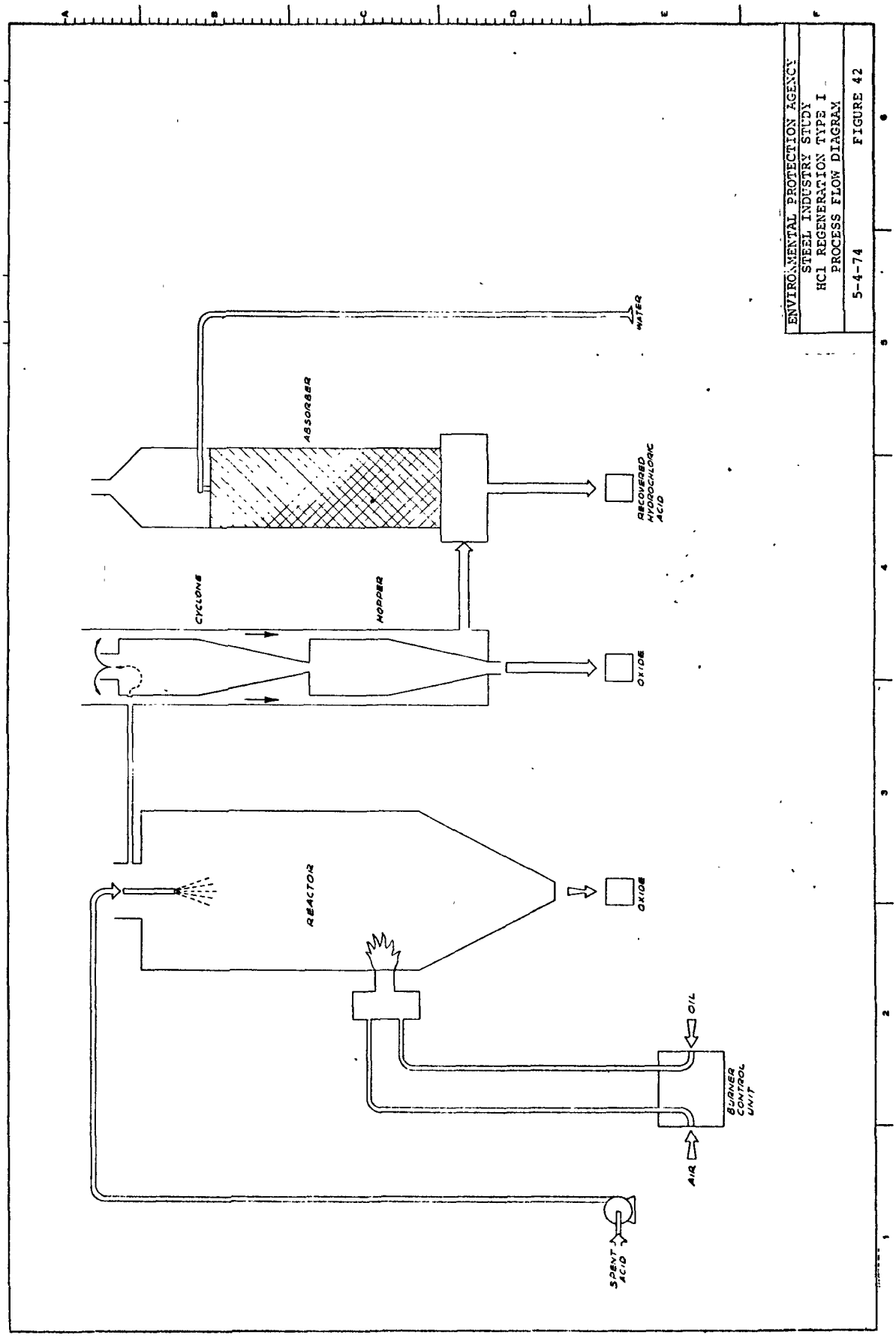
ENVIRONMENTAL PROTECTION AGENCY
STEEL INDUSTRY STUDY
HCl REGENERATION TYPE I
PROCESS FLOW DIAGRAM
5-4-74
FIGURE 42
WATER
ABSORBER
RECOVERED HYDROCHLORIC ACID
CYCLONE
HOPPER
OXIDE
REACTOR
OXIDE
OIL
BURNER CONTROL UNIT
AIR
SPENT ACID

high-efficiency venturi scrubber. These fines are dissolved in the pickle liquor feed stream and recycled.

After separation from the liquor, the cooled HCl-bearing gases pass into an absorber charged with water (possibly rinse water), in which acid below the azeoptropic composition is recovered by adiabatic absorption. Most of the commercial plants built so far produce 10-12% acid, although some go as high as 18%. The vapors issuing from the absorber are discharged via a suction fan that maintain the entire plant under negative pressure.

Acid recovery efficiency is over 99.5%, with losses being confined to small quantities in the waste gas. There is almost a complete absence of iron in the regenerated liquor. The small amount of dust from the reactor that could otherwise contaminate the pickle liquor is separated in high-efficiency collectors, thus resulting in optimum conditions for pickling.

Fuel is burned directly in the fluidized bed. Rugged structural elements permit direct and complete burning; separate combustion chambers are not needed, which simplifies the design and saves on cost.

Bulk density of the pelletized iron oxide product is 2920-3570 kg/cu m. (180-220 lb/cu ft). The pellets retain their shape even in the presence of water and during handling and storage. Chlorine composition is 0.02%. Details of this process are presented on Figure 43.

Other processes that are currently under research development or demonstration include the following:

Sulfuric Acid Process. A system has been demonstrated at pilot plant level which utilizes a process well known in Europe. This process is a "heating" process rather than the more common and proven "cooling" processes. The process, in effect, heats spent pickle liquor to about 150° to 175°C (302° to 347°F), at which time fresh acid is added to bring the acid concentration to about 50% to 55% H_2SO_4 (by weight). At this point, the ferrous sulfate content of the pickle liquor precipitates as ferrous sulfate monohydrate (crystals). Details of this process have not been made available at this time.

Hydrochloric Acid Processes. A pilot plant has been developed and demonstrated and is now in the process of being moved to a commercial operation. This process is a thermal decomposition type process but claims a unique

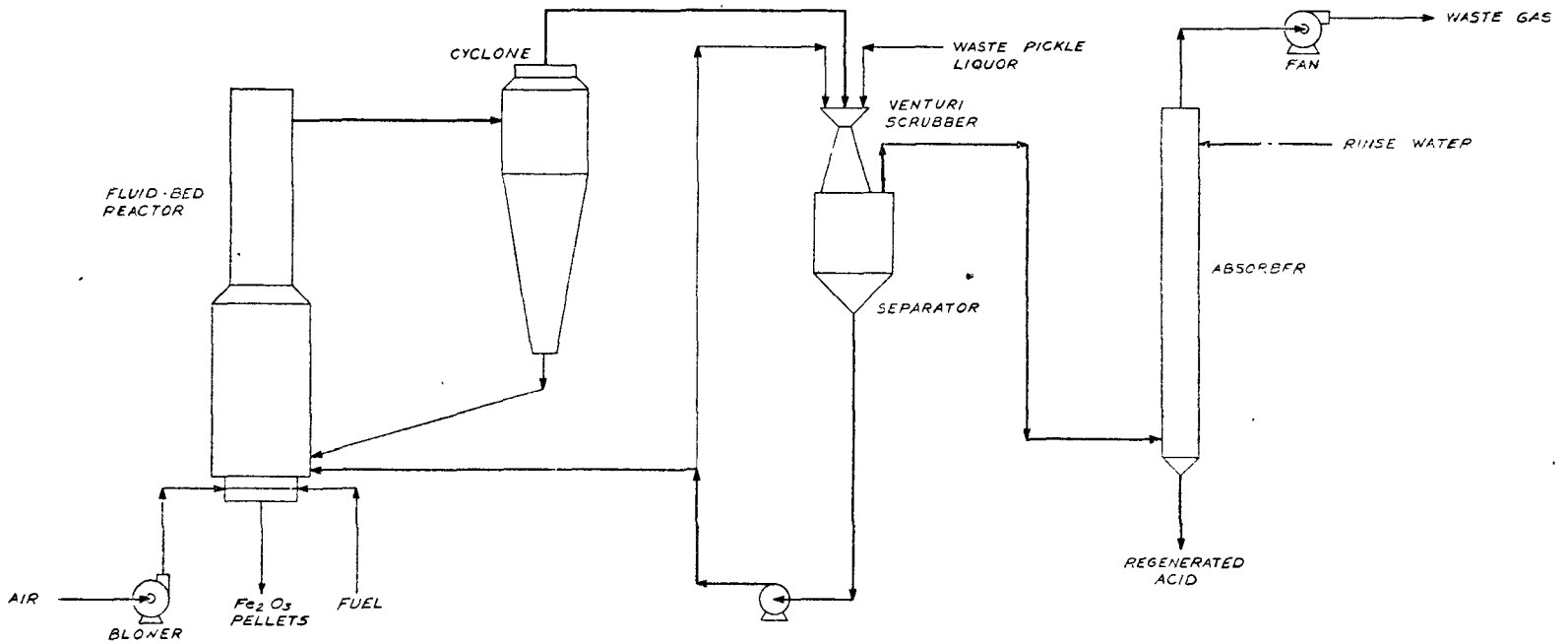

ENVIRONMENTAL PROTECTION AGENCY
STEEL INDUSTRY STUDY HCl REGENERATION TYPE II FLUID BED ROASTER PROCESS FLOW DIAGRAM
5-4-74 FIGURE 43

roaster reactor which is neither the "spray roaster" design, nor the "fluid-bed" design. The reactor is a "sliding-bed" type unit which produces a "sintered" agglomerate of iron oxide, and requires only a relatively small reactor in comparison to the other types of roasters.

A wet chemical process is also in development at this time. It has been proven in the laboratory, pilot plant, and demonstration plant level.

Waste pickle liquor is concentrated by thermal evaporation and then air oxidized, under pressure, to produce a solution of ferric chloride and some iron oxide. This solution is then hydrolyzed to produce HCl gas and iron oxide. HCl is recovered in an absorbing tower. The iron oxide that is produced can be recycled, used commercially, or disposed of as a non-polluting solid.

Waste pickle liquor storage provides a means of reserve to even out the flow and the composition of the waste pickle liquor. The pickle liquor is pumped to the evaporator where the solution is concentrated. This concentrated solution is fed to the oxidizer, which converts the ferrous chloride in the waste pickle liquor to ferric chloride. From the oxidizer the ferric chloride solution is blown over to the hydrolyzer, where hydrolysis of the ferric chloride takes place and black ferric oxide and hydrogen chloride gas are produced. The hydrogen chloride gas is absorbed in an absorber to produce hydrochloric acid at a concentration between 20-31%, depending on feed composition. The iron oxide is separated in the recovery system consisting of a wet separator, a slurry tank, a vacuum filter, and a conveyor system for ferric oxide disposal. The process flue gases are scrubbed in a tail gas scrubber. The process provides the steel industry with unique operational capability. Waste pickle liquor can be concentrated, or oxidized to produce sewage grade ferric chloride, or processed to produce a high strength hydrochloric acid solution. The iron oxide produced is a dense non-polluting material which can be recycled to the steelmaking operation, sold as a commercial product, or disposed of as a non-polluting solid. Details of this process are presented on Figure 44.

Plant Visits

Visits were made to 15 plant locations covering the various subcategories of pickling. Tables 10 and 11 present the summary of the plants visited in respect to geographic

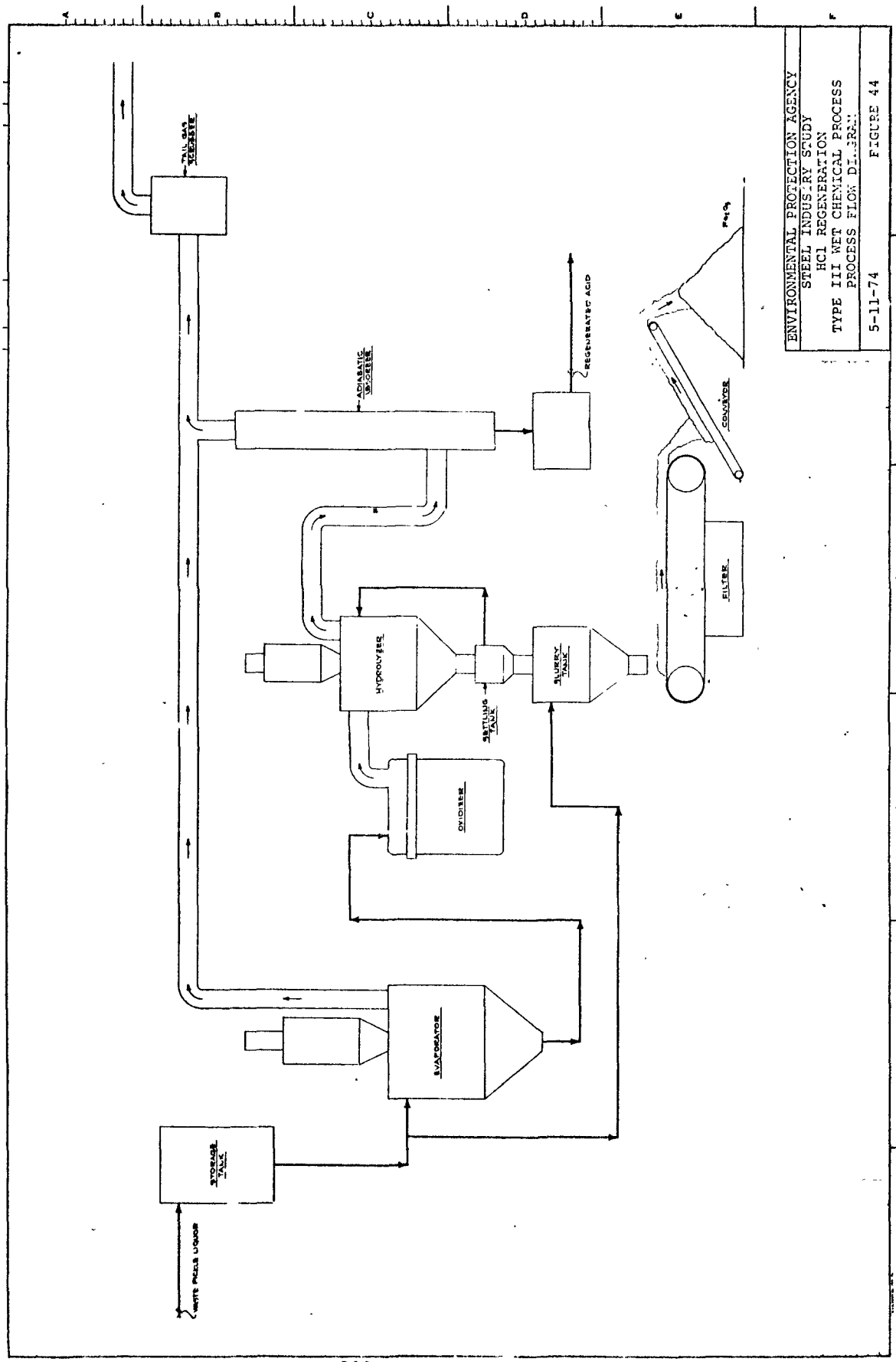
ENVIRONMENTAL PROTECTION AGENCY
STEEL INDUSTRY STUDY
HCl REGENERATION
TYPE III WET CHEMICAL PROCESS
PROCESS FLOW DIAGRAM
5-11-74
FIGURE 44
TAIL GAS SCRUBBER
ADIABATIC ABSORBER
REGENERATED ACID
CONVEYOR
FILTER
HYDROLYSER
SETTLING TANK
SLURRY TANK
OXIDISER
EVAPORATOR
STORAGE TANK
WASTE PICKLE LIQUOR

location, daily production, plant age, and age of the treatment facility.

Batch Sulfuric

Tables 53 and 54 present the plants raw and waste effluent loads.

Plant I-2 - Figure 29. Waste pickle liquor hauled away by private contractor. All rinses are combined with other mill wastes in a terminal lagoon and discharged to a canal.

Plant O-2 - Figure 45. Plant utilizes batch evaporative crystallization of spent sulfuric acid. Acid recovered with crystallization of spent sulfuric acid. Acid recovered with production of ferrous sulfate heptahydrate. Rinses are recycled to process as makeup to pickle tank.

Plant P-2 - Figure 46 and 47. Plant utilizes batch pickle liquor regeneration by vacuum crystallization. Rinses are metered to the sewer.

Plant Q-2 - Figure 48. Plant practices batch pickle regeneration through cooling of spent pickle liquor and precipitation of ferrous sulfate heptahydrate. Rinses and mists from filter are recycled back to pickle tank.

Plant R-2 - Figure 49. Plant combines pickle liquor and rinses in an equalization tank, flash mixes amd treats with acetylene sludge, lagoons, and discharges to receiving stream.

Plant S-2 - Figure 50. Concentrated pickle liquor is contract hauled. Standing rinse is reused as makeup to pickle tank. Running rinse is treated with lime and lagooned. Lagoon overflow is recycled, and sludge is contract hauled.

Continuous Sulfuric

Table 55 presents the plants raw and waste effluent loads.

Plant T-2 - Figure 51. Concentrated pickle liquor is regenerated by evaporative concentration. Rinses are recycled back as makeup to pickle tank. Steam condensate serves as final rinse.

Batch Hydrochloric

TABLE 53
WATER EFFLUENT TREATMENT COSTS
PICKLING - H_2SO_4 - BATCH CONCENTRATED

PLANT	I-2*	O-2	P-2	Q-2	R-2	RANGE
INITIAL INVESTMENT	698,182	240,000	187,034	297,500	272,213	
ANNUAL COSTS:						
OPERATING LABOR	-	1,348		8,660	16,133	
UTILITIES	14,912	-	59,000	14,430	35,396	
MAINTENANCE	28,947	-		2,890	-	
DEPRECIATION	69,818	24,000	18,703	29,750	27,221	
COST OF CAPITAL	29,324	10,080	7,856	12,495	11,433	
OTHER	280,702	-22,750	-19,815	-59,220	20,370	
TOTAL	423,703	12,678	65,744	9,005	110,553	
$/TON	1.628	0.320	1.796	0.289	0.338	0.289-1.796
$/1000 GAL TRT	79.41	48.76	102.06	11.89	60.96	11.89-102.06

*Portion attributed to this subcategory only.

AVERAGE NET PLANT RAW WASTE LOAD

PARAMETERS	lb/TON	mg/l	lb/TON	mg/l	lb/TON	mg/l	lb/TON	mg/l	lb/TON	mg/l	lb/TON	mg/l
Flow (gal./ton)	20.5	-	6.56	-	17.6	-	24.3	-	5.54	-	5.54-24.3	-
Dissolved Iron					5.864	4.0%	3.238	1.6%	3.130	6.78%	3.130-5.864	1.6%-6.78%
Suspended Solids	NO	NO	NO	NO	-	-	-0.320	-1,580	0.00323	70	-0.320-0.00323	-1,580-70
Oil and Grease	SAMPLE	SAMPLE	SAMPLE	SAMPLE	-	-	-0.0147	-73	0.00452	98	-0.0147-0.00452	-73-98
pH (units)					-	<1.0	-	-	-	2.0	-	<1.0-2.0

AVERAGE GROSS PLANT EFFLUENT WASTE LOAD

PARAMETERS	lb/Ton	mg/l	lb/Ton	mg/l	lb/Ton	mg/l	lb/Ton	mg/l	lb/Ton	mg/l	lb/Ton	mg/l
Flow (gal./ton)			0	-	0	-	0	-	5.54	-	0-5.54	-
Dissolved Iron	CONTRACT		0	0	0	0	0	0	0.000002	0.04	0-0.000002	0-0.04
Suspended Solids	DISPOSAL		0	0	0	0	0	0	0.00378	82	0-0.00378	0-82
Oil and Grease	OFFSITE		0	0	0	0	0	0	0.00035	7.7	0-0.00035	0-7.7
pH (units)			-	-	-	-	-	-	-	11.4	-	-

TABLE 54
WATER EFFLUENT TREATMENT COSTS
PICKLING - H_2SO_4 - BATCH RINSE

PLANT	I-2A*	I-2B*	O-2	P-2		RANGE
INITIAL INVESTMENT	48,670	121,678				
ANNUAL COSTS:						
OPERATING LABOR	-	-				
UTILITIES	6	15	ALL COSTS			
MAINTENANCE	477	1,193	APPLIED TO	NO TREATMENT		
DEPRECIATION	4,867	12,168	TREATMENT OF	OF RINSE WATERS		
COST OF CAPITAL	2,044	5,110	CONCENTRATES			
OTHER	451	1,154				
TOTAL	7,855	19,640				
$/TON	0.111	0.104				0.046-0.616
$/1000 GAL TRT	0.535	0.224				0.224-3.109

*Portion attributed to this subcategory only (two separator lines at this plant).

AVERAGE NET PLANT RAW WASTE LOAD

PARAMETERS	lb/TON	mg/l	lb/TON	mg/l	lb/TON	mg/l	lb/TON	mg/l	lb/TON	mg/l	lb/TON	mg/l
Flow (gal./ton)	207	-	465	-		-	16.9	-			8.0-465	-
Dissolved Iron	0.604	350	0.139	36	Data	4.3%	0.915	6500			0.139-@3	36-4.3%
Suspended Solids	0.121	70	0.0813	21	Not	18	0.105	749			0.00133-0.262	18-749
Oil and Grease	-0.0034	-2.0	0.0325	8.4	Available	312	0.00014	1			-0.0034-0.0922	-2.0-415
pH (units)	-	2.6	-	2.9-6.4		1.0	-	1.3-1.6			-	1.0-6.4

AVERAGE GROSS PLANT EFFLUENT WASTE LOAD

PARAMETERS	lb/Ton	mg/l	lb/Ton	mg/l	lb/Ton	mg/l	lb/Ton	mg/l	lb/Ton	mg/l	lb/Ton	mg/l
Flow (gal./ton)	207	-	465	-	0	-	16.9	-			0-465	-
Dissolved Iron	0.000052	0.03	0.000116	0.03	0	0	0.915	6500			0-0.915	0-6500
Suspended Solids	0.0672	39	0.151	39	0	0	0.106	755			0-0.151	0-755
Oil and Grease	0.0241	14	0.0542	14	0	0	0.00056,	4			0-0.0542	0-14
pH (units)	-	6.7	-	6.7	-	-	-	1.3-1.6			-	1.3-11.4

TABLE 54 (Cont'd)
WATER EFFLUENT TREATMENT COSTS
PICKLING - H_2SO_4 - BATCH RINSE

PLANT	Q-2	R-2	S-2			RANGE
INITIAL INVESTMENT		37,120	9,700			
ANNUAL COSTS:						
OPERATING LABOR		2,200	690			
UTILITIES	ALL COSTS	4,826	1,800			
MAINTENANCE	APPLIED TO	-	1,850			
DEPRECIATION	TREATMENT OF	3,712	970			
COST OF CAPITAL	CONCENTRATES	1,559	410			
OTHER		2,778	52,230			
TOTAL		15,075	57,950			
$/TON		0.046	0.616			0.046-0.616
$/1000 GAL TRT		1.72	3.109			0.224-3.109

AVERAGE NET PLANT RAW WASTE LOAD

PARAMETERS	lb/TON	mg/l	lb/TON	mg/l	lb/TON	mg/l	lb/TON	mg/l	lb/TON	mg/l	lb/TON	mg/l
Flow (gal./ton)	8.0	-	26.7	-	198	-					8.0-465	-
Dissolved Iron	0.2331	3500	0.411	1850	0.971	590					0.139-@3	36-4.3%
Suspended Solids	0.00133	20	0.0823	370	0.262	159					0.00133 0.262	18-749
Oil and Grease	0.00004	0.6	0.0922	415	0.0346	21					-0.0034-0.0922	-2.0-415
pH (units)	-	1.9	-	2.0	-	2.2						1.0-6.4

AVERAGE GROSS PLANT EFFLUENT WASTE LOAD

PARAMETERS	lb/Ton	mg/l	lb/Ton	mg/l	lb/Ton	mg/l	lb/Ton	mg/l	lb/Ton	mg/l	lb/Ton	mg/l
Flow (gal./ton)	0	-	26.7	-	0	-					0-465	-
Dissolved Iron	0	0	0.000009	0.04	0	0					0-0.915	0-6500
Suspended Solids	0	0	0.0182	82	0	0					0-0.151	0-755
Oil and Grease	0	0	0.00171	7.7	0	0					0-0.0542	0-14
pH (units)	-	-	-	11.4	-	-					-	1.3-11.4

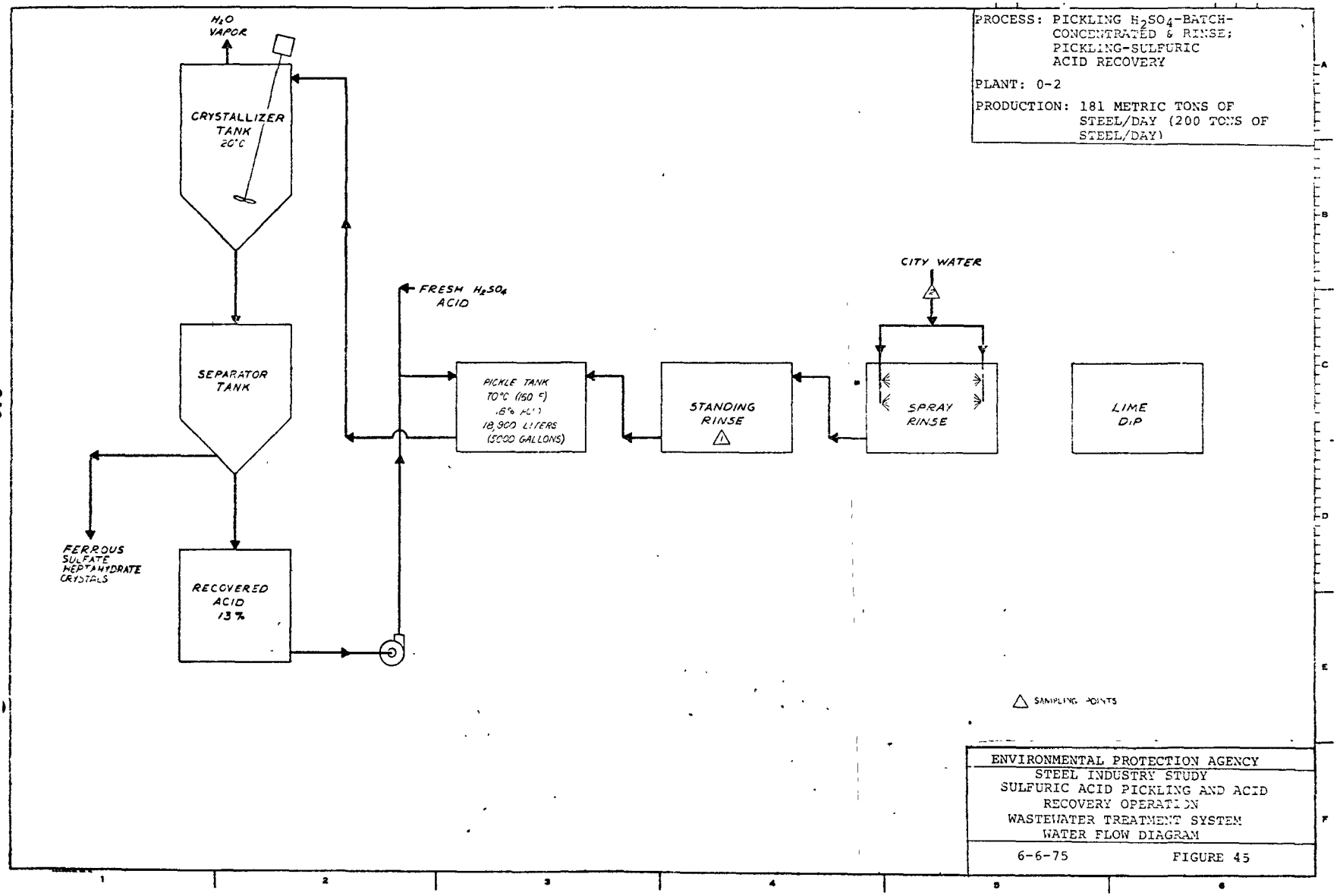
PROCESS: PICKLING H_2SO_4-BATCH-CONCENTRATED & RINSE; PICKLING-SULFURIC ACID RECOVERY
PLANT: 0-2
PRODUCTION: 181 METRIC TONS OF STEEL/DAY (200 TONS OF STEEL/DAY)
H_2O VAPOR
CRYSTALLIZER TANK 20°C
SEPARATOR TANK
FERROUS SULFATE HEPTAHYDRATE CRYSTALS
RECOVERED ACID 13%
FRESH H_2SO_4 ACID
PICKLE TANK 70°C (150 °F) 15% HCl 18,900 LITERS (5000 GALLONS)
STANDING RINSE
CITY WATER
SPRAY RINSE
LIME DIP
△ SAMPLING POINTS
ENVIRONMENTAL PROTECTION AGENCY
STEEL INDUSTRY STUDY
SULFURIC ACID PICKLING AND ACID RECOVERY OPERATION
WASTEWATER TREATMENT SYSTEM
WATER FLOW DIAGRAM
6-6-75
FIGURE 45

PROCESS: PICKLING-SULFURIC ACID RECOVERY

PLANT: P-2

PRODUCTION: 28,705 LITERS OF SPENT PICKLE LIQUOR/DAY (7,584 GALS. SPENT PICKLE LIQUOR/DAY)

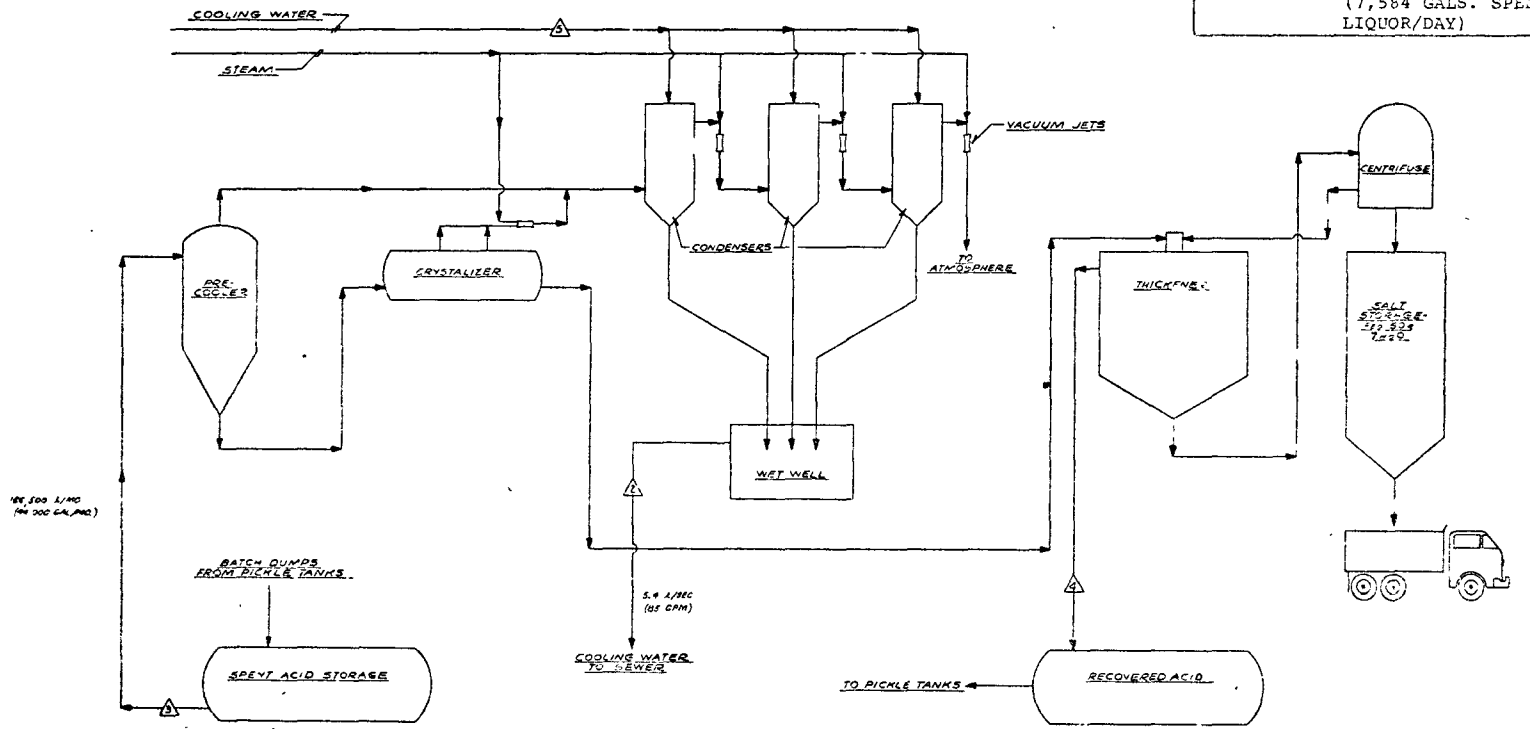

△ SAMPLING POINTS

ENVIRONMENTAL PROTECTION AGENCY
STEEL INDUSTRY STUDY
SULFURIC ACID RECOVERY
WASTEWATER TREATMENT SYSTEM
WATER FLOW DIAGRAM

6-6-75 FIGURE 46

PROCESS: PICKLING H_2SO_4-BATCH-CONCENTRATED & RINSE; PICKLING SULFURIC ACID RECOVERY

PLANT: P-2

PRODUCTION: 129 METRIC TONS OF STEEL/DAY (142 TONS OF STEEL/DAY)

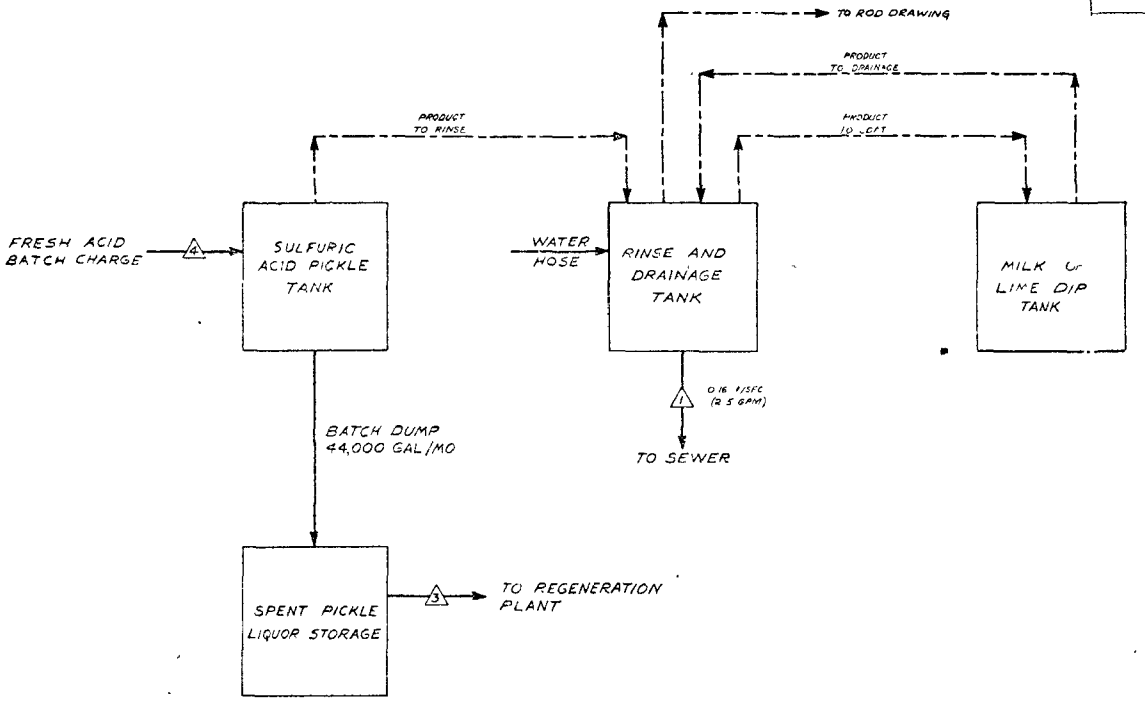

ENVIRONMENTAL PROTECTION AGENCY
STEEL INDUSTRY STUDY
BATCH H_2SO_4 PICKLING AND ACID RECOVERY WASTEWATER TREATMENT SYSTEM
WATER FLOW DIAGRAM

6-6-75 FIGURE 47

PROCESS: PICKLING H_2SO_4-BATCH CONCENTRATED & RINSE; PICKLING SULFURIC ACID RECOVERY

PLANT: Q-2

PRODUCTION: 109 METRIC TONS/DAY (120 TONS/DAY)

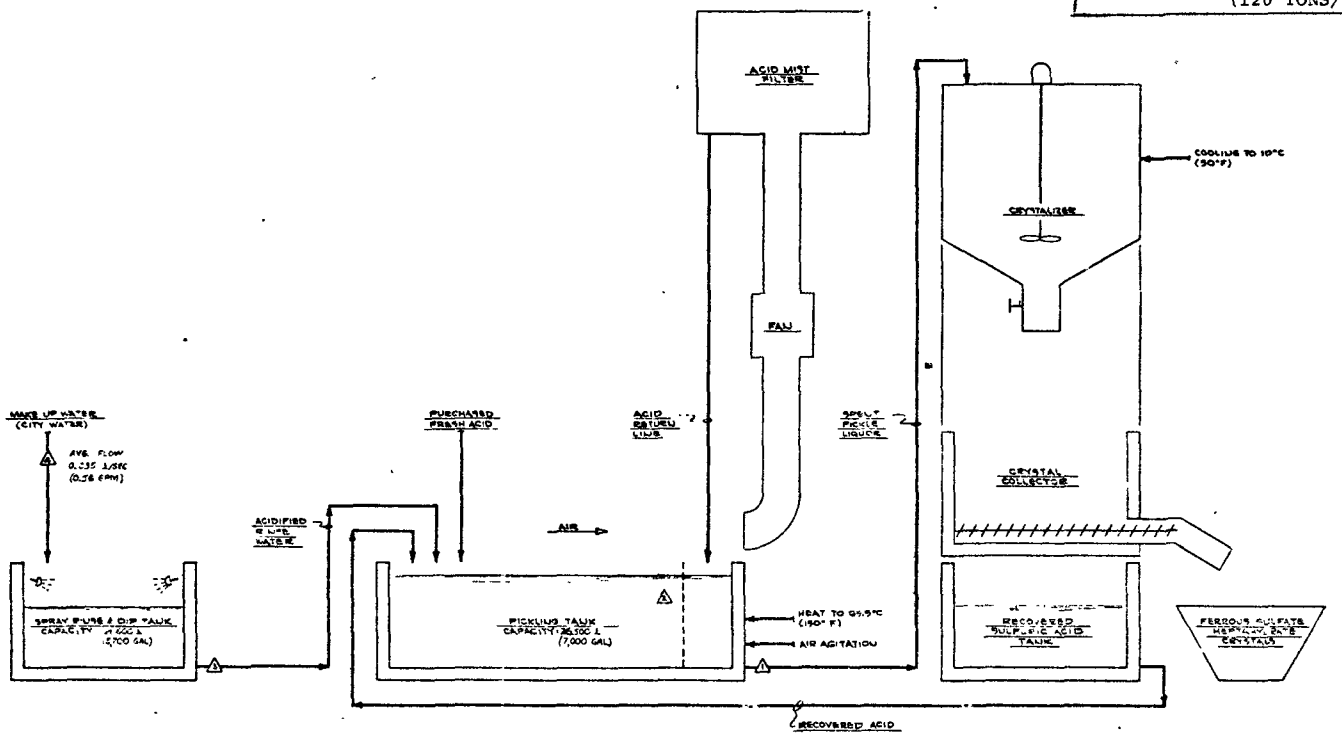

△ SAMPLING POINTS

ENVIRONMENTAL PROTECTION AGENCY
STEEL INDUSTRY STUDY
SULFURIC ACID PICKLING AND RECOVERY
BATCH OPERATION
WASTEWATER TREATMENT SYSTEM
WATER FLOW DIAGRAM

6-6-75 FIGURE 48

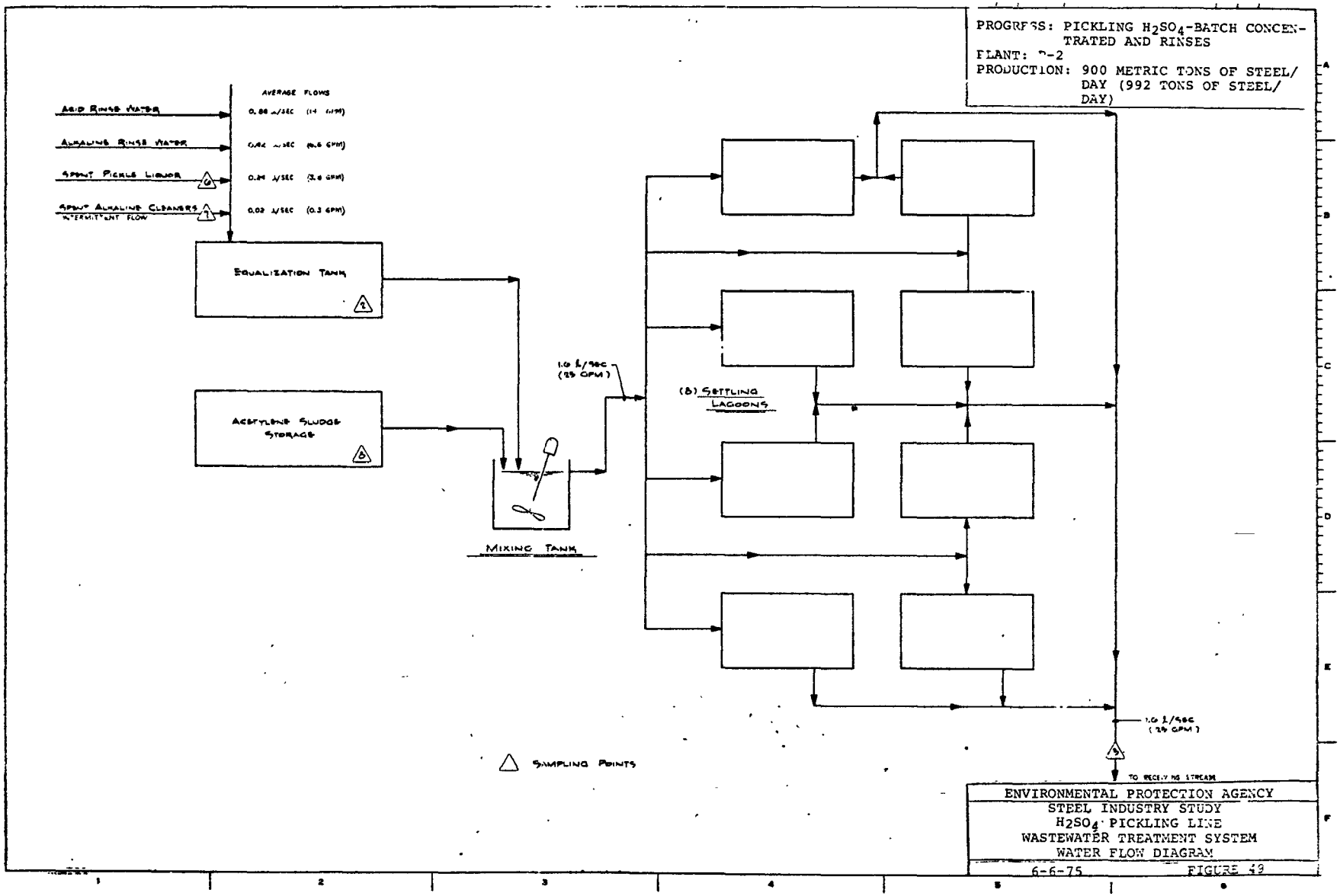
PROGRESS: PICKLING H_2SO_4-BATCH CONCENTRATED AND RINSES
PLANT: P-2
PRODUCTION: 900 METRIC TONS OF STEEL/DAY (992 TONS OF STEEL/DAY)
AVERAGE FLOWS
ACID RINSE WATER
0.88 L/SEC (14 GPM)
ALKALINE RINSE WATER
0.62 L/SEC (9.8 GPM)
SPENT PICKLE LIQUOR
0.24 L/SEC (3.8 GPM)
SPENT ALKALINE CLEANERS INTERMITTENT FLOW
0.02 L/SEC (0.3 GPM)
EQUALIZATION TANK
ACETYLENE SLUDGE STORAGE
1.0 L/SEC (25 GPM)
MIXING TANK
(8) SETTLING LAGOONS
1.0 L/SEC (25 GPM)
TO RECEIVING STREAM
SAMPLING POINTS
ENVIRONMENTAL PROTECTION AGENCY
STEEL INDUSTRY STUDY
H_2SO_4 PICKLING LINE
WASTEWATER TREATMENT SYSTEM
WATER FLOW DIAGRAM
6-6-75
FIGURE 49

PROCESS: PICKLING-H_2SO_4-BATCH RINSES

PLANT: S-2

PRODUCTION: 231 METRIC TONS OF STEEL/DAY (255 TONS OF STEEL/DAY)

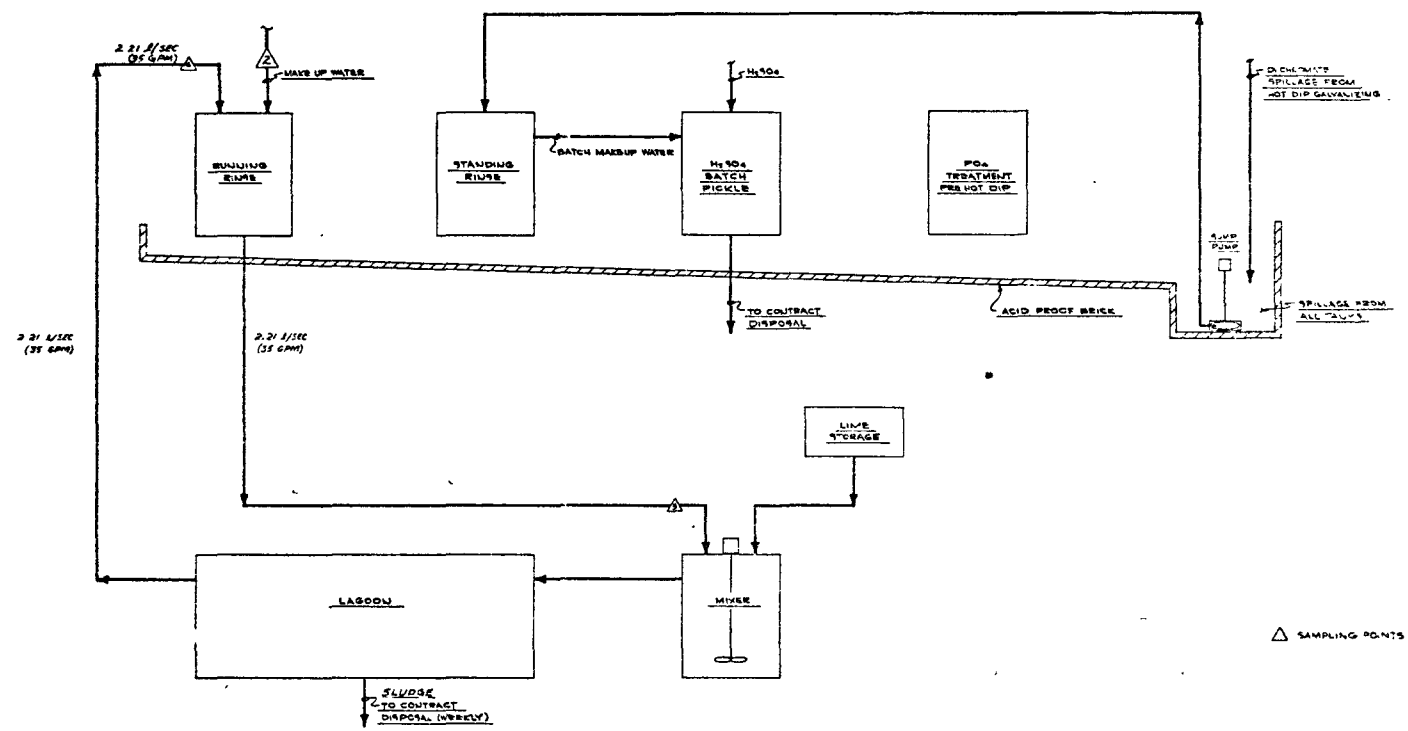

ENVIRONMENTAL PROTECTION AGENCY
STEEL INDUSTRY STUDY
BATCH H_2SO_4 PICKLING
WASTEWATER TREATMENT SYSTEM
WATER FLOW DIAGRAM

3-16-74 FIGURE 50

TABLE 55
WATER EFFLUENT TREATMENT COSTS
PICKLING - H_2SO_4 - CONTINUOUS CONCENTRATES AND RINSES

PLANT .	T-2 - Conc.	T-2 - Rinse				RANGE
INITIAL INVESTMENT	393,846					
ANNUAL COSTS:						
OPERATING LABOR						
UTILITIES	17,600	ALL COSTS APPLIED TO TREATMENT OF CONCENTRATES				
MAINTENANCE						
DEPRECIATION	39,385					
COST OF CAPITAL	16,541					
OTHER (Acid Credit)	18,520					
TOTAL	55,006					
$/TON	0.705					
$/1000 GAL TRT	48.29					

AVERAGE NET PLANT RAW WASTE LOAD

PARAMETERS	lb/TON	mg/l	lb/TON	mg/l	lb/TON	mg/l	lb/TON	mg/l	lb/TON	mg/l	lb/TON	mg/l
Flow (gal./ton)	14.6	-	21.6	-								
Dissolved Iron	4.13	3.4%	0.330	1833								
Suspended Solids	0.0079	65	0.00882	49								
Oil and Grease	0.0022	18	0.00090	5.0								
pH (units)	-	<1	-	1.6								

AVERAGE GROSS PLANT EFFLUENT WASTE LOAD

PARAMETERS	lb/Ton	mg/l	lb/Ton	mg/l	lb/Ton	mg/l	lb/Ton	mg/l	lb/Ton	mg/l	lb/Ton	mg/l
Flow (gal./ton)	0	-	0	-								
Dissolved Iron	0	0	0	0								
Suspended Solids	0	0	0	0								
Oil and Grease	0	0	0	0								
pH (units)	-	-	-	-								

PROCESS: PICKLING H_2SO_4-CONTINUOUS-CONCENTRATED AND RINSES; PICKLING-SULFURIC ACID RECOVERY

PLANT: T-2

PRODUCTION: 272 METRIC TONS OF STEEL/DAY (300 TONS OF STEEL/DAY)

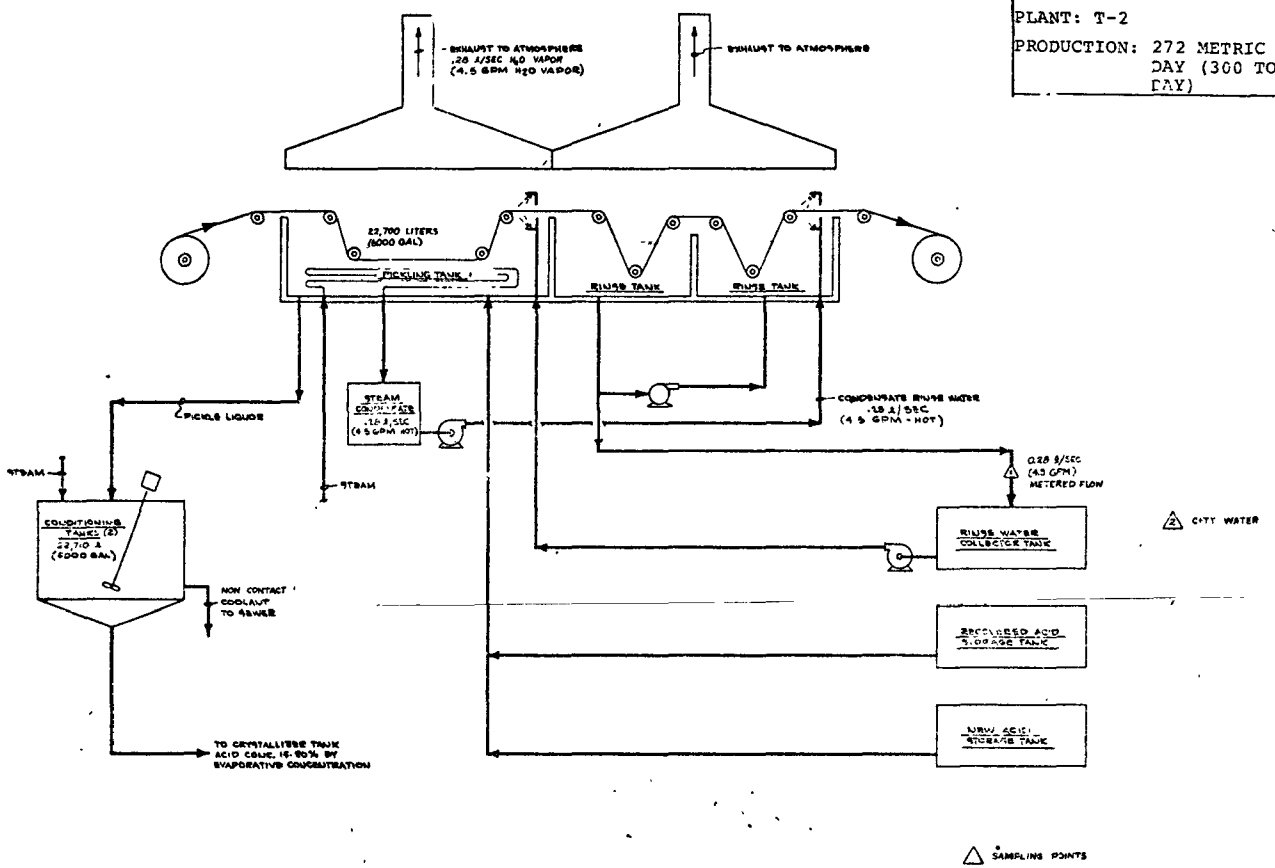

ENVIRONMENTAL PROTECTION AGENCY
STEEL INDUSTRY STUDY
CONTINUOUS STRIP PICKLING
WASTEWATER TREATMENT SYSTEM
WATER FLOW DIAGRAM

3-16-74 FIGURE 51

Tables 56 and 57 present the plants raw and waste effluent loads.

Plant U-2 - Figure 52. Waste pickle liquors and rinse waters are neutralized in a batch treatment tank by sodium carbonate prior to sanitary sewer discharge.

Plant V-2 - Figures 53 and 54. Spent pickle liquor is contract hauled. Rinses are neutralized with NaOH prior to sanitary sewer discharge.

Continuous Hydrochloric

Tables 56 and 57 present the plants raw and waste effluent loads.

Plant I-2 - Figure 29. Plant dilutes concentrated pickle liquor and rinses with other mill wastes in a terminal lagoon and discharges to a canal.

Plant W-2 - Figure 55. Waste pickle liquor is treated by pyrolytic regeneration of hydrochloric acid. Rinses and fume hood scrubber wastes are diluted and metered to the sewer. Absorber vent scrubber treated with caustic solution and discharged.

Plant X-2 - Figures 56 and 57. Plant practices spent acid recovery via hydrochloric acid regeneration. Rinses are diluted and metered to the sewer. Absorber vent scrubber treated in clarifier with other plant wastewaters.

Plant Y-2 - Figures 58 and 59. Waste pickle liquor is treated by pyrolytic regeneration of hydrochloric acid. Rinses and absorber vent scrubbers are diluted and metered to the sewer.

Plant Z-2 - Figure 60. Plant treats waste pickle liquor and rinses jointly via equalization, neutralization, aeration and clarification with polymer addition, followed by discharge to a sanitary sewer.

Plant AA-2 - Figure 61. Plant uses cascade rinse system with rinses and concentrated pickle liquor disposed of via deep well disposal.

Plant BB-2 - Figure 62. Concentrated pickle liquor is disposed via off-site contract hauling or deep well disposal. Rinses are equalized, mixed with cold mill wastes, neutralized, aerated, treated with polymers, clarified, lagooned, and discharged to a receiving stream.

TABLE 56
WATER EFFLUENT TREATMENT COSTS
PICKLING - HCl - CONCENTRATED

PLANT	U-2	V-2	W-2	X-2	Y-2	RANGE
INITIAL INVESTMENT	-	-		1,679,127		
ANNUAL COSTS:						
OPERATING LABOR	-	-				
UTILITIES	-	-	Cost Data Not	222,222	Cost Data Not	
MAINTENANCE	-	-	Supplied by		Supplied by	
DEPRECIATION	-	-	Company	167,913	Company	
COST OF CAPITAL	-	-		70,523		
OTHER	3,360	4,500		(-801,379)		
TOTAL	3,360	4,500		(-340,721)		
$/TON	0.387	0.0643		(-0.600)		(-0.600)-1.159
$/1000 GAL TRT	59.96	16.65		(-41.87)		(-41.87)-59.96

AVERAGE NET PLANT RAW WASTE LOAD

PARAMETERS	lb/TON	mg/l	lb/TON	mg/l	lb/TON	mg/l	lb/TON	mg/l	lb/TON	mg/l	lb/TON	mg/l
Flow (gal/ton)	6.45	-	3.86	-	11.95	-	14.32	-	15.79	-	3.26-41.4	-
Dissolved Iron	4.13	7.7%	3.435	10.7%	13.52	13.6%					3.14-15.27	4.43%-13.6%
Suspended Solids	0.0215	400	0.00449	140	0.00876	88	SPENT PICKLE		SPENT PICKLE		0.00108-0.0414	40-400
Oil and Grease	-	-	-	-	0.00035	3.5	LIQUOR NOT		LIQUOR NOT		0-0.00035	0-3.5
pH (units)	-	<1	-	<1	-	<1	SAMPLED		SAMPLED		-	All <1

AVERAGE GROSS PLANT EFFLUENT WASTE LOAD

PARAMETERS	lb/Ton	mg/l	lb/Ton	mg/l	lb/Ton	mg/l	lb/Ton	mg/l	lb/Ton	mg/l	lb/Ton	mg/l
Flow (gal./ton)					246.5	-	284	-	288	-	41.4-288	-
Dissolved Iron	CONTRACT		CONTRACT		0.0308	15	0.00024	0.10	0.00053	0.22	0.00008-0.0308	0.10-15
Suspended Solids	DISPOSAL		DISPOSAL		0.279	136	0.0473	20	0.139	58	0.0124-0.279	20-136
Oil and Grease	OFF-SITE		OFF-SITE		0.0057	2.8	0.0095	4.0	0.0086	3.6	<0.00035-0.0095	<1-4.0
pH (units)					-	3.7-7.6	-	7.8	-	1.7-7.1	-	1.7-8.4

TABLE 56 (Cont'd)
WATER EFFLUENT TREATMENT COSTS
PICKLING - HCl - CONCENTRATED

PLANT	Z-2	AA-2	BB-2			RANGE
INITIAL INVESTMENT	943,666		984,615			
ANNUAL COSTS:						
OPERATING LABOR		COST DATA FOR	28,200			
UTILITIES	389,676	DEEP WELL	19,113			
MAINTENANCE		DISPOSAL OF	30,200			
DEPRECIATION	94,367	SPENT LIQUOR	98,462			
COST OF CAPITAL	39,634	NOT PROVIDED	41,353			
OTHER	-	BY COMPANY	-			
TOTAL	523,677		217,328			
$/TON	1.159		0.0953			(-0.600)-1.159
$/1000 GAL TRT	27.96		3.80			(-41.87)-59.96

AVERAGE NET PLANT RAW WASTE LOAD

PARAMETERS	lb/TON	mg/l	lb/TON	mg/l	lb/TON	mg/l	lb/TON	mg/l	lb/TON	mg/l	lb/TON	mg/l
Flow (gal./ton)	41.4	-	3.26	-							3.26-41.4	-
Dissolved Iron	15.27	4.43%	3.14	13.6%	SPENT PICKLE						3.14-15.27	4.43%-13.6%
Suspended Solids	0.0414	120	0.00108	40	LIQUOR NOT						0.00108-0.0414	40-400
Oil and Grease	0	0	0	0	SAMPLED						0-0.00035	0-3.5
pH (units)	-	<1	-	<1							-	All <1

AVERAGE GROSS PLANT EFFLUENT WASTE LOAD

PARAMETERS	lb/Ton	mg/l	lb/Ton	mg/l	lb/Ton	mg/l	lb/Ton	mg/l	lb/Ton	mg/l	lb/Ton	mg/l
Flow (gal./ton)	41.4	-	-	-	-	-					41.4-288	-
Dissolved Iron	0.00008	0.23									0.00008-0.0308	0.10-15
Suspended Solids	0.0124	36	DEEP WELL		DEEP WELL						0.0124-0.279	20-136
Oil and Grease	<0.00035	<1	DISPOSAL		DISPOSAL						<0.00035-0.0095	<1-4.0
pH (units)	-	8.4									-	1.7-8.4

TABLE 57
WATER EFFLUENT TREATMENT COSTS
PICKLING - HCl - RINSE

PLANT .	I-2 *	U-2	V-2	W-2	X-2	RANGE
INITIAL INVESTMENT	8,573	-	-			
ANNUAL COSTS:						
OPERATING LABOR	-	-	1,250			
UTILITIES	-	-	-	COST DATA NOT	NO TREATMENT	
MAINTENANCE	83	-	-	SUPPLIED BY		
DEPRECIATION	857	-	-	COMPANY		
COST OF CAPITAL	360	-	-			
OTHER	82	15,660	912			
TOTAL	1,382	15,660	2,162			
$/TON	0.321	1.802	0.031			0.031-1.802
$/1000 GAL TRT	0.0028	19.40	0.185			0.0028-21.04

*Portion attributed to this subcategory only.

AVERAGE NET PLANT RAW WASTE LOAD

PARAMETERS	lb/TON	mg/l	lb/TON	mg/l	lb/TON	mg/l	lb/TON	mg/l	lb/TON	mg/l	lb/TON	mg/l
Flow (gal./ton)	220	-	92.9	-	167.2	-	273	-	653	-	5.85-653	-
Dissolved Iron	0.0128	7	0.147	190	0.376	270	0.267	117	1.05	193	0.0128-2.077	7-11,400
Suspended Solids	0.0971	53	0.00077	1	0	0	0.0228	10	0.0163	3	0-0.0971	0-60
Oil and Grease	0.0073	4	0.00387	5	0.00209	1.5	0.0114	5	0	0	0-0.0466	0-28
pH (units)	-	4.5-5.0	-	1.8	-	2.5-3.4	-	2.9-3.8	-	2.4	-	1.1-5.0

AVERAGE GROSS PLANT EFFLUENT WASTE LOAD

PARAMETERS	lb/Ton	mg/l	lb/Ton	mg/l	lb/Ton	mg/l	lb/Ton	mg/l	lb/Ton	mg/l	lb/Ton	mg/l
Flow (gal./ton)	220	-	92.9	-	167.2	-	273	-	653	-	87.2-653	-
Dissolved Iron	0.00005	0.03	0.00039	0.50	0.199	143	0.267	117	1.05	193	0.00005-1.05	0.03-240
Suspended Solids	0.0715	39	0.298	385	0.384	276	0.315	14	0.0653	12	0.00358-0.384	2-385
Oil and Grease	0.0257	14	0.00387	5	0.0130	9.3	0.0136	6	0	0	0-0.025.	0-14
pH (units)	-	6.7	-	8.5	-	2.5-3.5	-	2.9-3.8	-	2.4	-	1.7-8.5

TABLE 57 (Cont'd)
WATER EFFLUENT TREATMENT COSTS
PICKLING - HCl - RINSE

PLANT	Y-2	Z-2	AA-2	BB-2 *		RANGE
INITIAL INVESTMENT		49,667	226,462	3,238,154		
ANNUAL COSTS:						
OPERATING LABOR	COST DATA NOT SUPPLIED BY COMPANY		-	93,060		
UTILITIES		20,509	2,605	174,663		
MAINTENANCE			69,361	99,660		
DEPRECIATION		4,966	22,646	323,815		
COST OF CAPITAL		2,086	9,512	136,003		
OTHER		-	-	-		
TOTAL		27,561	104,124	827,201		
$/TON		0.061	0.123	0.363		0.031-1.802
$/1000 GAL TRT		0.491	21.04	1.84		0.0028-21.04

*Portion attributed to this subcategory only.

AVERAGE NET PLANT RAW WASTE LOAD

PARAMETERS	lb/TON	mg/l	lb/TON	mg/l	lb/TON	mg/l	lb/TON	mg/l	lb/TON	mg/l	lb/TON	mg/l
Flow (gal./ton)	87.2	-	124	-	5.85	-	215	-			5.85-653	-
Dissolved Iron	0.174	240	0.310	300	0.682	11,400	2.077	1,160			0.0128-2.077	7-11,400
Suspended Solids	0.00145	2	0.0620	60	0.00097	20	0.0645	36			0-0.0971	0-60
Oil and Grease	0	0	0.0137	13.3	0.00136	28	0.0466	26			0-0.0466	0-28
pH (units)	-	1.7	-	2.7	-	1.1	-	1.5			-	1.1-5.0

AVERAGE GROSS PLANT EFFLUENT WASTE LOAD

PARAMETERS	lb/Ton	mg/l	lb/Ton	mg/l	lb/Ton	mg/l	lb/Ton	mg/l	lb/Ton	mg/l	lb/Ton	mg/l
Flow (gal./ton)	87.2	-	124	-			215	-			87.2-653	-
Dissolved Iron	0.174	240	0.00024	0.23			0.000072	0.04			0.00005-1.05	0.03-240
Suspended Solids	0.00508	7	0.0372	36	DEEP WELL		0.00358	2			0.00358-0.38	2-385
Oil and Grease	0.00218	3	<0.001	<1	DISPOSAL		0.0107	6			0-0.0257	0-14
pH (units)	-	1.7	-	8.4			-	7.7			-	1.7-8.5

PROCESS: PICKLING-HCl-BATCH CONCENTRATED & RINSE

PLANT: U-2

PRODUCTION: 28 METRIC TONS OF STEEL/DAY (31 TONS OF STEEL/DAY)

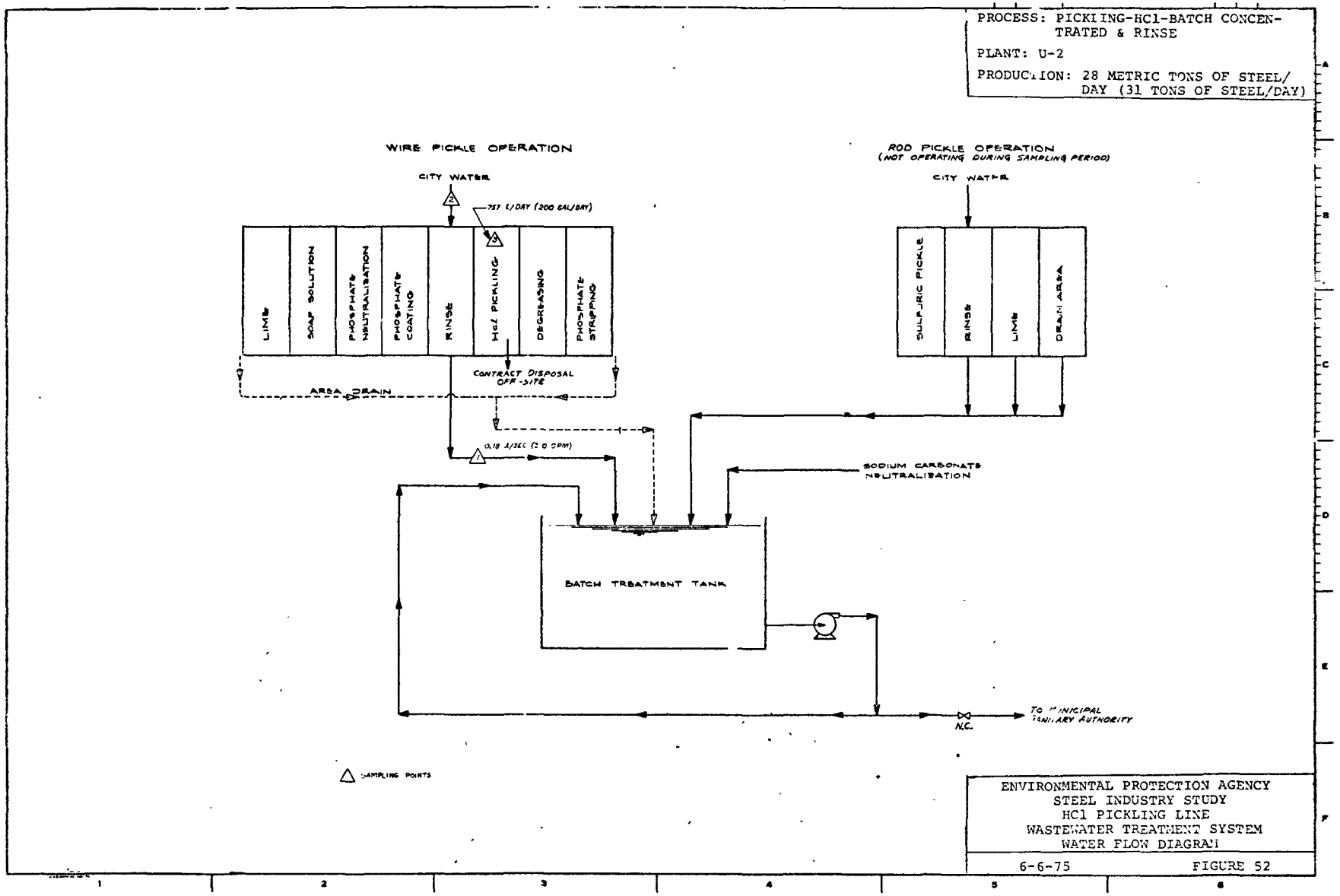

ENVIRONMENTAL PROTECTION AGENCY
STEEL INDUSTRY STUDY
HCl PICKLING LINE
WASTEWATER TREATMENT SYSTEM
WATER FLOW DIAGRAM

6-6-75 FIGURE 52

PROCESS: PICKLING HCl-BATCH CONCENTRATED & RINSE

PLANT: V-2

PRODUCTION: 215 METRIC TONS OF STEEL/DAY (237 TONS OF STEEL/DAY)

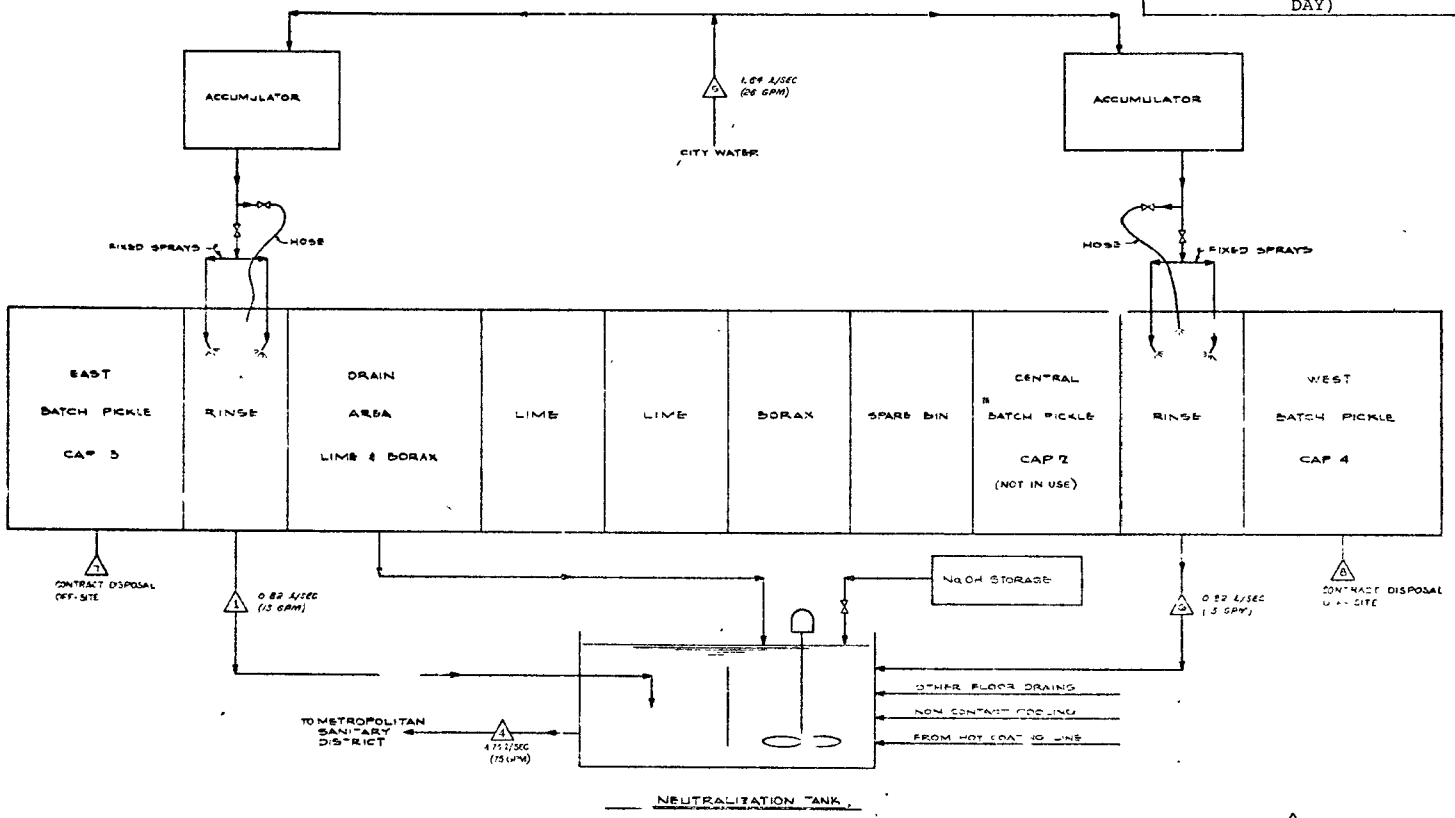

ENVIRONMENTAL PROTECTION AGENCY
STEEL INDUSTRY STUDY
HCl PICKLING LINE
WASTEWATER TREATMENT SYSTEM
WATER FLOW DIAGRAM

6-6-75 FIGURE 53

PROCESS: HOT COATING-GALVANIZING

PLANT: V-2

PRODUCTION: 5.31 METRIC TONS OF STEEL/DAY (5.85 TONS OF STEEL/DAY)

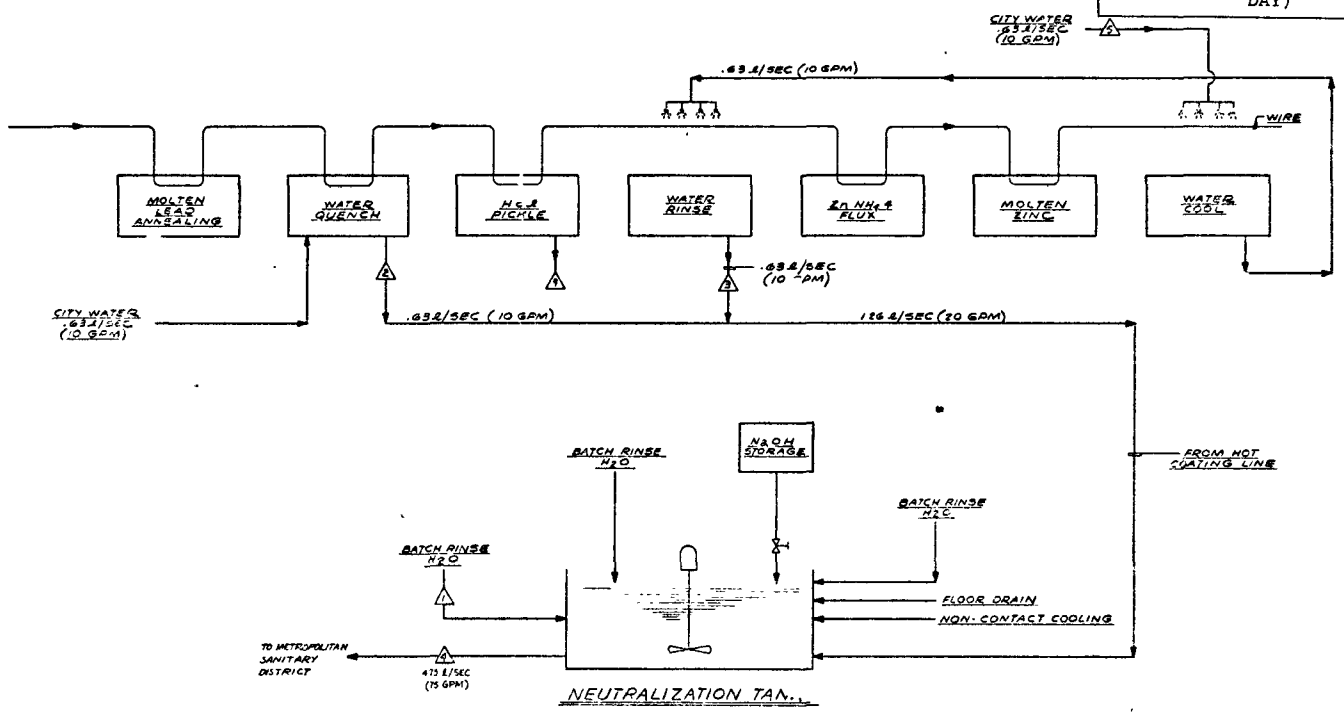

ENVIRONMENTAL PROTECTION AGENCY
STEEL INDUSTRY STUDY
HOT COATING LINE-GALVANIZING
WASTEWATER TREATMENT SYSTEM
WATER FLOW DIAGRAM

6-6-75 FIGURE 54

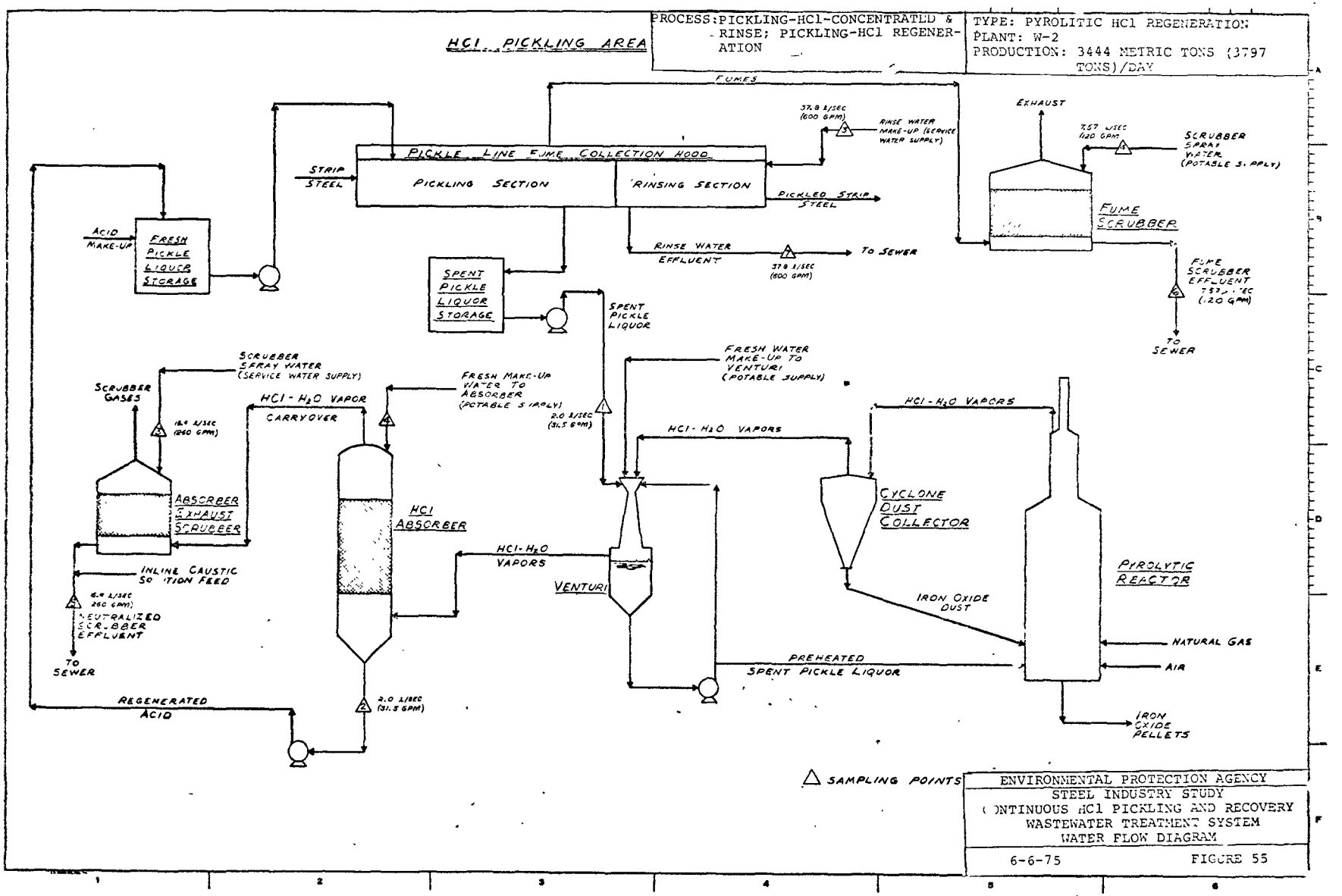
HCl PICKLING AREA
PROCESS: PICKLING-HCl-CONCENTRATED & -RINSE; PICKLING-HCl REGENERATION
TYPE: PYROLITIC HCl REGENERATION
PLANT: W-2
PRODUCTION: 3444 METRIC TONS (3797 TONS)/DAY
FUMES
EXHAUST
37.8 L/SEC (600 GPM)
RINSE WATER MAKE-UP (SERVICE WATER SUPPLY)
7.57 L/SEC (120 GPM)
SCRUBBER SPRAY WATER (POTABLE SUPPLY)
PICKLE LINE FUME COLLECTION HOOD
STRIP STEEL
PICKLING SECTION
RINSING SECTION
PICKLED STRIP STEEL
FUME SCRUBBER
ACID MAKE-UP
FRESH PICKLE LIQUOR STORAGE
RINSE WATER EFFLUENT
37.8 L/SEC (600 GPM)
TO SEWER
FUME SCRUBBER EFFLUENT 7.57 L/SEC (120 GPM)
TO SEWER
SPENT PICKLE LIQUOR STORAGE
SPENT PICKLE LIQUOR
SCRUBBER SPRAY WATER (SERVICE WATER SUPPLY)
FRESH WATER MAKE-UP TO VENTURI (POTABLE SUPPLY)
SCRUBBER GASES
16.4 L/SEC (260 GPM)
HCl - H2O VAPOR CARRYOVER
FRESH MAKE-UP WATER TO ABSORBER (POTABLE SUPPLY)
2.0 L/SEC (31.5 GPM)
HCl - H2O VAPORS
HCl - H2O VAPORS
ABSORBER EXHAUST SCRUBBER
HCl ABSORBER
CYCLONE DUST COLLECTOR
HCl - H2O VAPORS
VENTURI
PYROLYTIC REACTOR
INLINE CAUSTIC SOLUTION FEED
16.4 L/SEC 260 GPM)
NEUTRALIZED SCRUBBER EFFLUENT
TO SEWER
IRON OXIDE DUST
NATURAL GAS
AIR
PREHEATED SPENT PICKLE LIQUOR
REGENERATED ACID
2.0 L/SEC (31.5 GPM)
IRON OXIDE PELLETS
SAMPLING POINTS
ENVIRONMENTAL PROTECTION AGENCY
STEEL INDUSTRY STUDY
CONTINUOUS HCl PICKLING AND RECOVERY WASTEWATER TREATMENT SYSTEM
WATER FLOW DIAGRAM
6-6-75
FIGURE 55

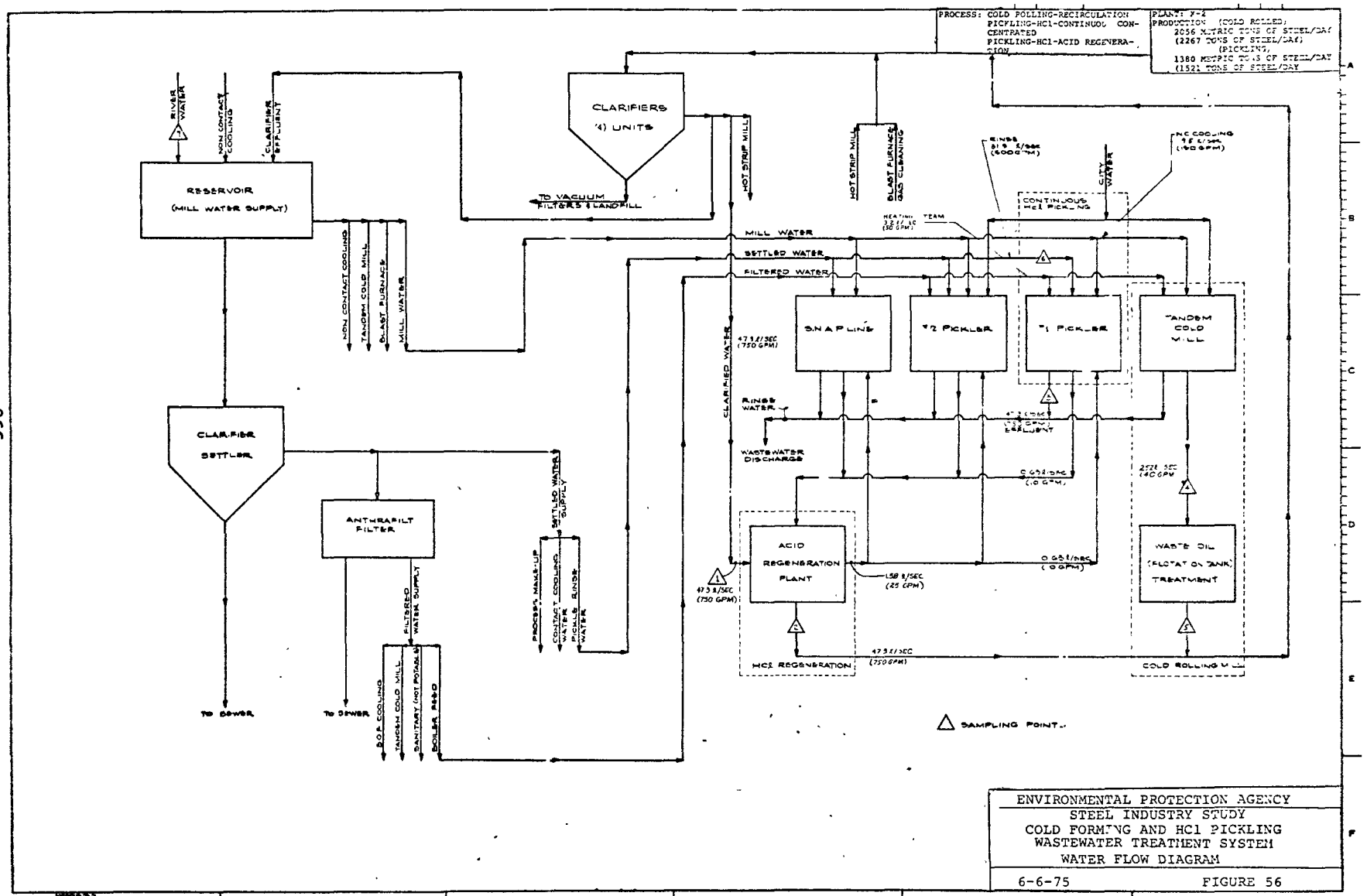
PROCESS: COLD ROLLING-RECIRCULATION
PICKLING-HCl-CONTINUOUS CONCENTRATED
PICKLING-HCl-ACID REGENERATION
PLANT: X-2
PRODUCTION (COLD ROLLED)
2056 METRIC TONS OF STEEL/DAY
(2267 TONS OF STEEL/DAY)
(PICKLING)
1380 METRIC TONS OF STEEL/DAY
(1521 TONS OF STEEL/DAY
RIVER WATER
NON CONTACT COOLING
CLARIFIER EFFLUENT
RESERVOIR
(MILL WATER SUPPLY)
CLARIFIERS
(4) UNITS
TO VACUUM FILTERS & LANDFILL
HOT STRIP MILL
HOT STRIP MILL
BLAST FURNACE GAS CLEANING
CITY WATER
CONTINUOUS HCl PICKLING
NON CONTACT COOLING
TANDEM COLD MILL
BLAST FURNACE
MILL WATER
MILL WATER
SETTLED WATER
FILTERED WATER
CLARIFIED WATER
S.N.A.P. LINE
#2 PICKLER
#1 PICKLER
TANDEM COLD MILL
RINSE WATER
WASTEWATER DISCHARGE
EFFLUENT
CLARIFIER SETTLER
ANTHRAFILT FILTER
SETTLED WATER SUPPLY
PROCESS MAKE-UP
CONTACT COOLING WATER
PICKLE RINSE WATER
FILTERED WATER SUPPLY
B.O.F. COOLING
TANDEM COLD MILL
SANITARY (NOT POTABLE)
BOILER FEED
TO SEWER
TO SEWER
ACID REGENERATION PLANT
HCl REGENERATION
WASTE OIL (FLOTATION TANK) TREATMENT
COLD ROLLING MILL
SAMPLING POINT
ENVIRONMENTAL PROTECTION AGENCY
STEEL INDUSTRY STUDY
COLD FORMING AND HCl PICKLING
WASTEWATER TREATMENT SYSTEM
WATER FLOW DIAGRAM
6-6-75
FIGURE 56

PROCESS: PICKLING-HYDROCHLORIC ACID REGENERATION

PLANT: X-2

PRODUCTION: 124 METRIC TONS OF HCl/DAY (137 TONS OF HCl/DAY)

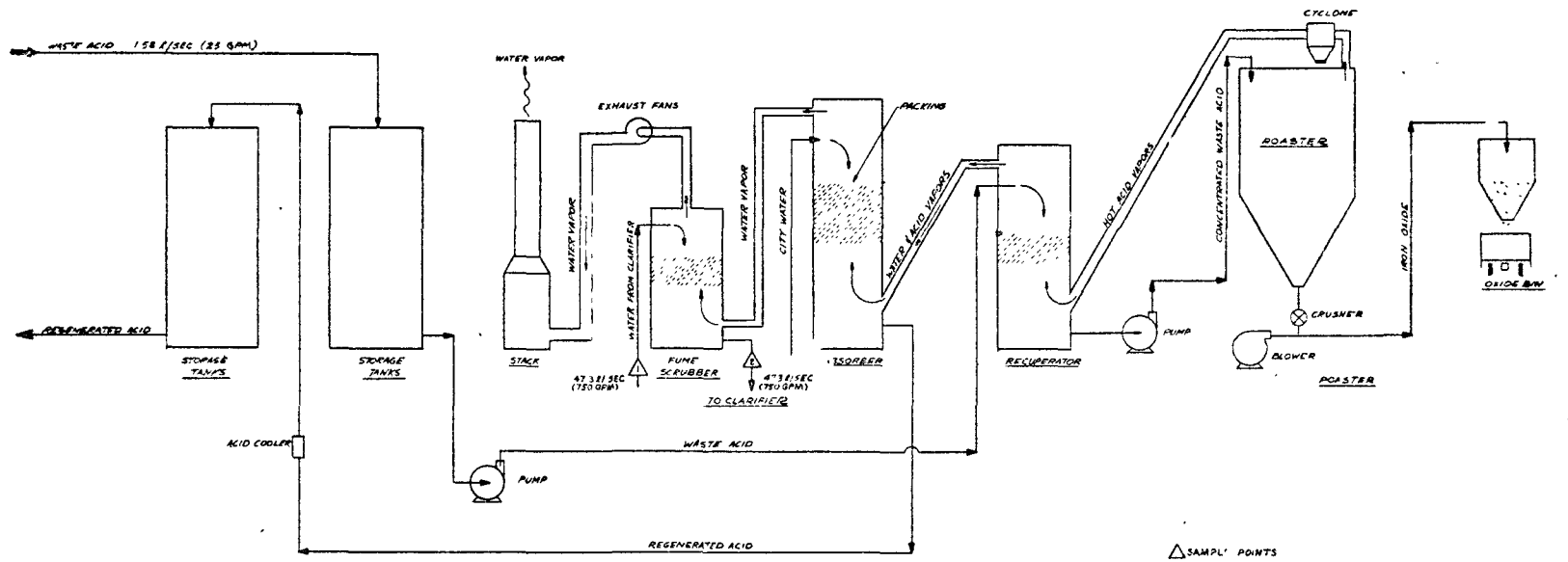

ENVIRONMENTAL PROTECTION AGENCY
STEEL INDUSTRY STUDY
HCl REGENERATION
WASTEWATER TREATMENT SYSTEM
WATER FLOW DIAGRAM

6-5-74 FIGURE 57

PROCESS: PICKLING-HCl-RINSE
TYPE: CONTINUOUS
PLANT: Y-2
PRODUCTION: 1648 METRIC TONS/DAY
(1817 TONS/DAY)

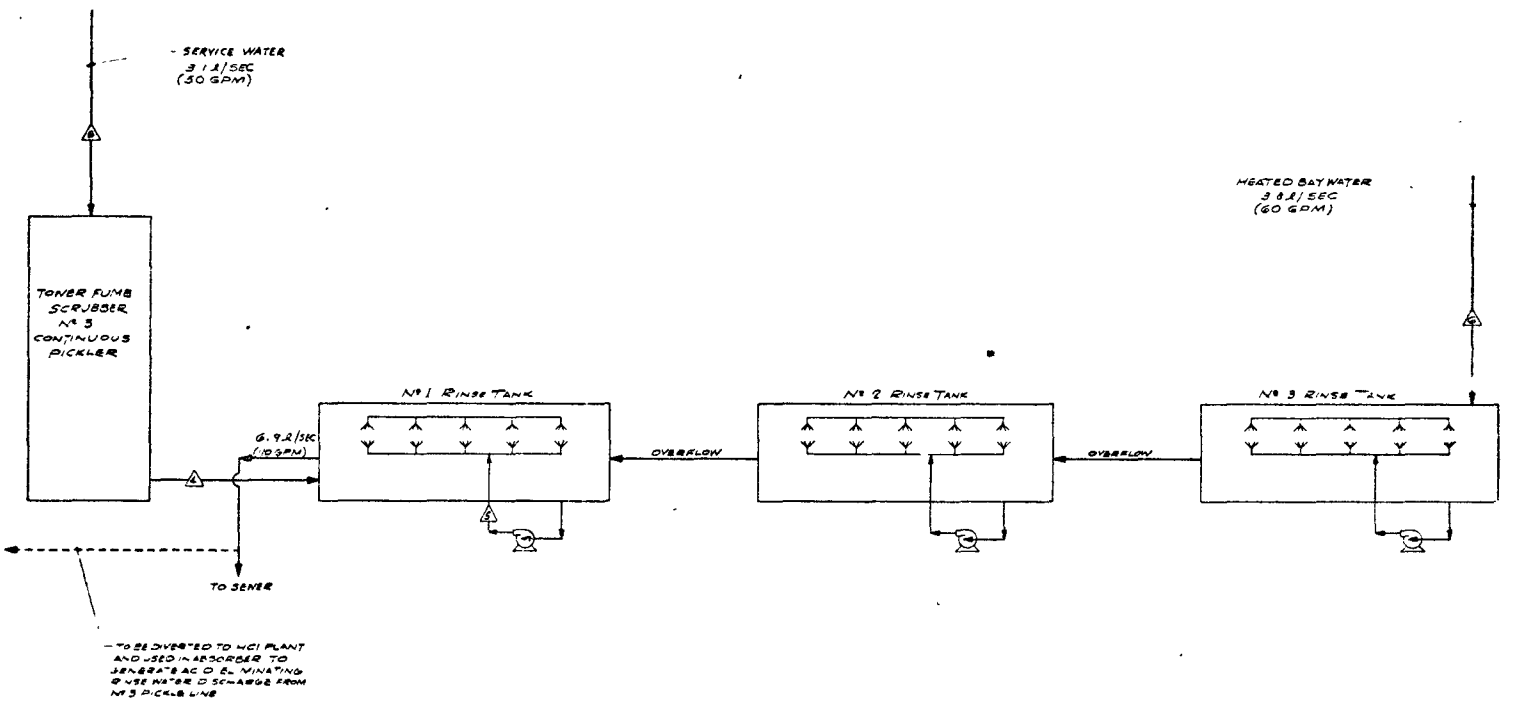

ENVIRONMENTAL PROTECTION AGENCY
STEEL INDUSTRY STUDY
HCl PICKLE LINE
WASTEWATER TREATMENT SYSTEM
WATER FLOW DIAGRAM

6-6-75 FIGURE 58

PROCESS: HCl REGENERATION
TYPE: SPRAY ROASTER
PLANT: Y-2
PRODUCTION: 4082 METRIC TONS/DAY
(4500 TONS/DAY)

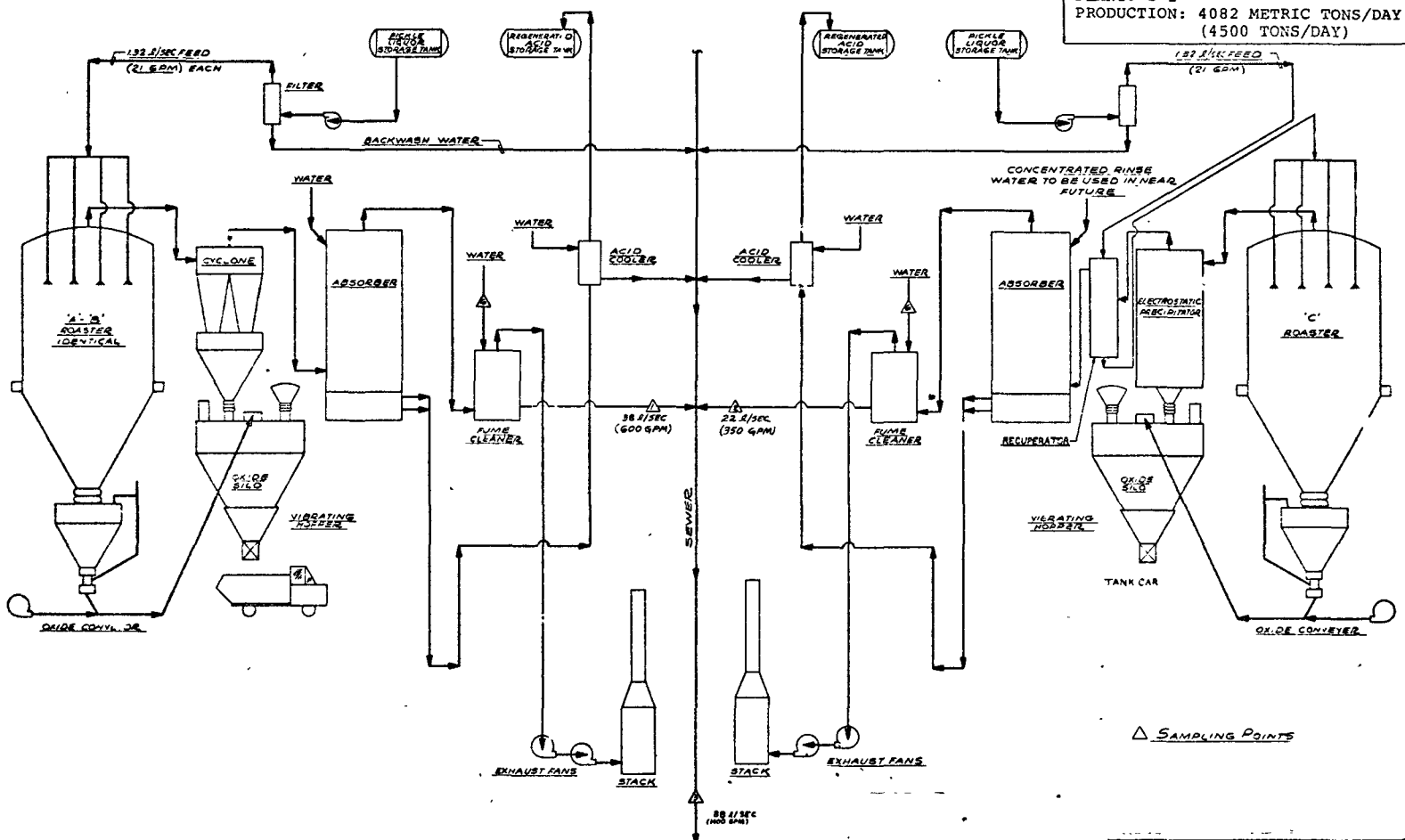

ENVIRONMENTAL PROTECTION AGENCY
STEEL INDUSTRY STUDY
HCl REGENERATION
WASTEWATER TREATMENT SYSTEM
WATER FLOW DIAGRAM
5-11-74 FIGURE 59

PROCESS: PICKLING HCl CONTINUOUS CONCENTRATED & RINSE

PLANT: Z-2

PRODUCTION: 1261 METRIC TONS OF STEEL/DAY (1390 TONS OF STEEL/DAY)

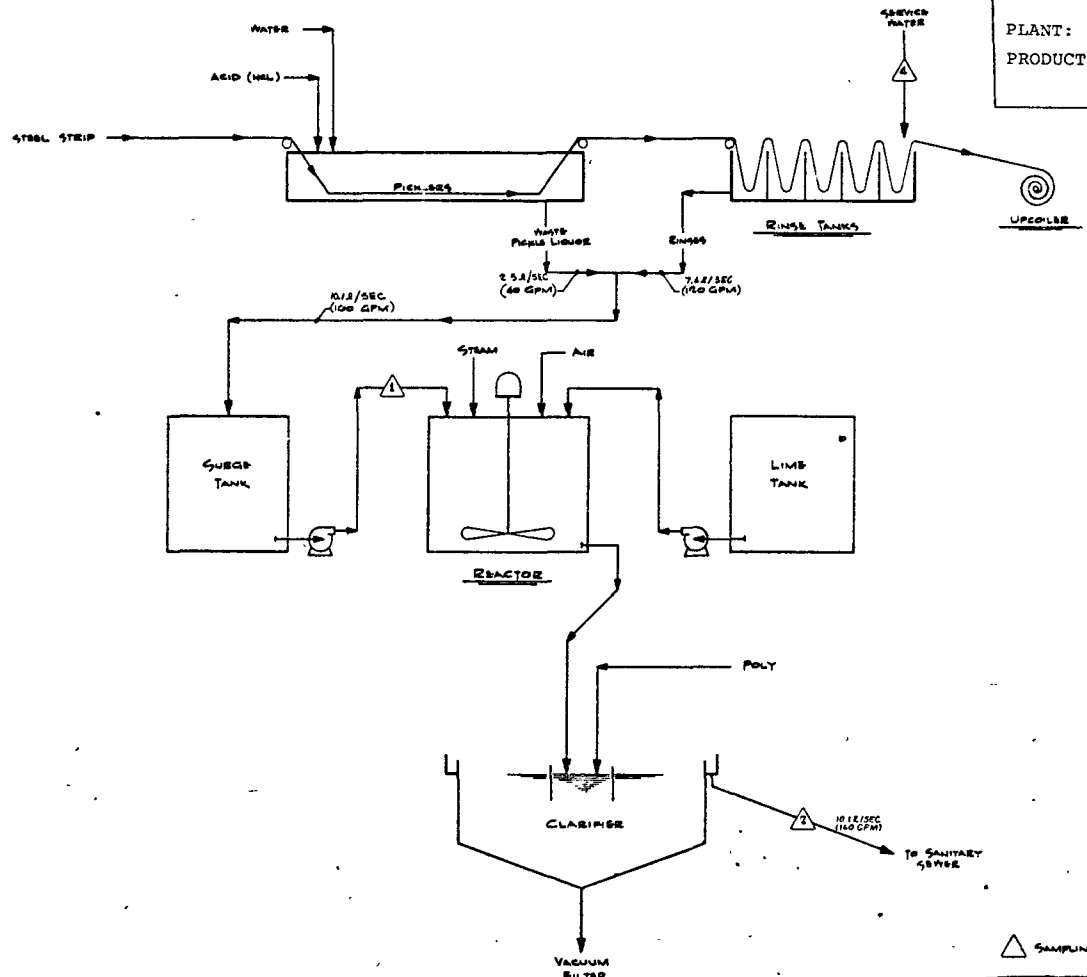

△ SAMPLING POINTS

ENVIRONMENTAL PROTECTION AGENCY
STEEL INDUSTRY STUDY
HCl PICKLING LINE
WASTEWATER TREATMENT SYSTEM
WATER FLOW DIAGRAM

6-6-75 FIGURE 60

PROCESS: PICKLING-HCl-CONTINUOUS CONCENTRATED & RINSE

PLANT: AA-2

PRODUCTION: 2613 METRIC TONS OF STEEL/DAY (2880 TONS OF STEEL/DAY)

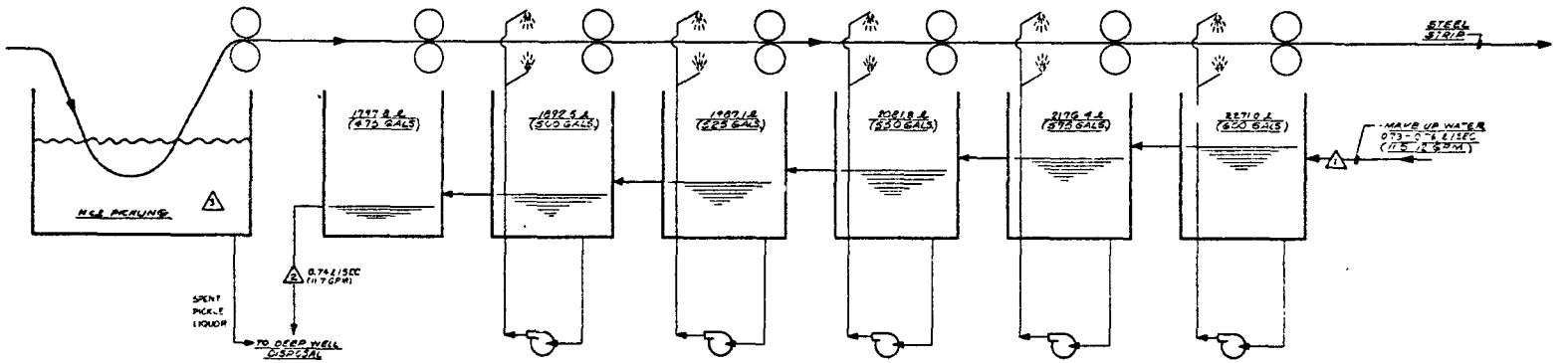

ENVIRONMENTAL PROTECTION AGENCY
STEEL INDUSTRY STUDY
HCl PICKLING LINE
WASTEWATER TREATMENT SYSTEM
WATER FLOW DIAGRAM

6-6-75 FIGURE 61

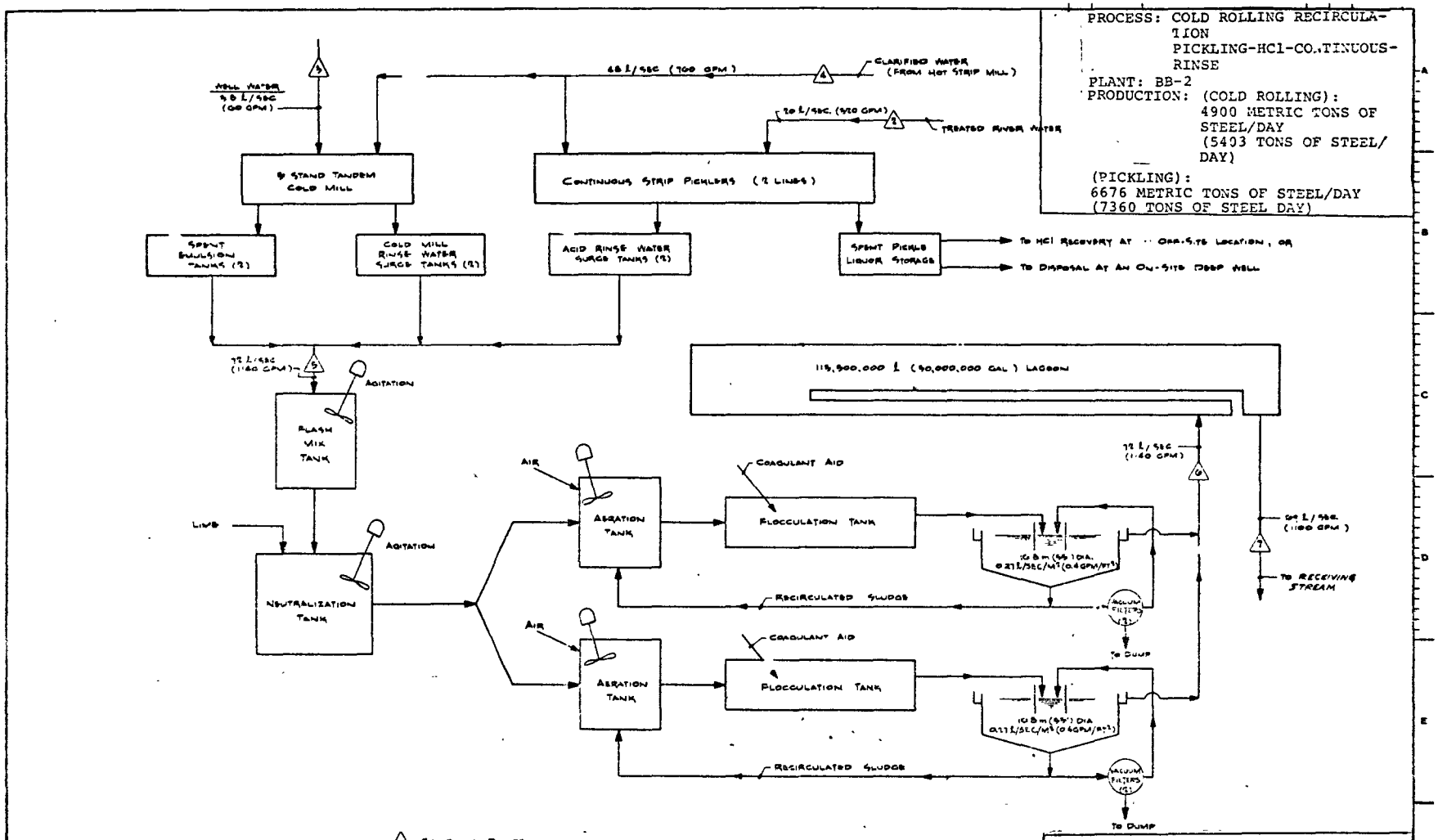
PROCESS: COLD ROLLING RECIRCULATION
PICKLING-HCl-CONTINUOUS-RINSE
PLANT: BB-2
PRODUCTION: (COLD ROLLING): 4900 METRIC TONS OF STEEL/DAY (5403 TONS OF STEEL/DAY)
(PICKLING): 6676 METRIC TONS OF STEEL/DAY (7360 TONS OF STEEL DAY)
MILL WATER 95 L/SEC (900 GPM)
68 L/SEC (700 GPM)
CLARIFIED WATER (FROM HOT STRIP MILL)
TREATED RIVER WATER
5 STAND TANDEM COLD MILL
CONTINUOUS STRIP PICKLERS (2 LINES)
SPENT EMULSION TANKS (2)
COLD MILL RINSE WATER SURGE TANKS (2)
ACID RINSE WATER SURGE TANKS (2)
SPENT PICKLE LIQUOR STORAGE
TO HCl RECOVERY AT OFF-SITE LOCATION, OR
TO DISPOSAL AT AN ON-SITE DEEP WELL
72 L/SEC (1140 GPM)
AGITATION
FLASH MIX TANK
LIME
AGITATION
NEUTRALIZATION TANK
AIR
AERATION TANK
COAGULANT AID
FLOCCULATION TANK
AIR
AERATION TANK
COAGULANT AID
FLOCCULATION TANK
RECIRCULATED SLUDGE
RECIRCULATED SLUDGE
115,500,000 L (30,000,000 GAL) LAGOON
72 L/SEC (1140 GPM)
TO RECEIVING STREAM
TO DUMP
TO DUMP
SAMPLING POINTS
ENVIRONMENTAL PROTECTION AGENCY
STEEL INDUSTRY STUDY
COLD ROLLING & HCl PICKLING
WASTEWATER TREATMENT SYSTEM
WATER FLOW DIAGRAM
6-6-75
FIGURE 62

DRY SCALE REMOVAL

Although the use of acids (pickling) is the most common method for scale removal, a mechanical process called grit blasting or blast cleaning is also used. Sand, aluminum oxide, or cast-iron shot are directed against the work by compressed air or a mechanical device using centrifugal force. These impinge on the surface of the steel and erode or abrade away the scale.

Grit blasting leaves a bright metallic surface without any adhering scale. It is capable of cleaning a number of products that cannot successfully be cleaned by pickling, and it does not induce the hazards of under-pickling, over-pickling, or pitting which may attend the pickling process.

Grit blasting can process only a limited number of items at one time. As the shot builds up with scale its cleaning effectiveness decreases, and items are difficult to inspect for surface defects because of the cleaning action of the shot.

Some plants use a combination of blast cleaning and pickling to increase the plant production. Blast cleaning is used to remove the heavy scale. This is followed by a short pickle to remove final traces of scale and rust. Pickling alone could be used, but pickling times would be increased three to four fold, thereby reducing overall plant output.

One such plant installed a blast cleaning system for $50,000 in 1963 to clean rods prior to pickling and further processing. Annual operating costs of the unit for 1973 were $73,000. In 1973 the plant shipped 40,740 tons of product; 70% of which was blast cleaned at a cost of $2.55/ton.

Blast cleaning systems require good ventilation to remove the dusty air from the area. Prior to discharging to the atmosphere, this dust must be removed from the air. Dry baghouses are most commonly used for this purpose, however, wet scrubbers could be used. As a general rule there are no wastewater discharges from a blast cleaning operation.

COLD ROLLING OPERATIONS

Several different treatment systems have been used throughout the years to treat wastewaters resulting from cold rolling operations. These systems have progressed from direct discharge to the receiving stream without treatment to the treatment and reuse of the wastewater with no direct

discharge to the receiving stream. The high cost of rolling oils, and the promulgation of regulations requiring pollution control have all but eliminated the once-through direct discharge of these wastes. Oil recovery systems and closed-loop recycle systems are widely utilized for the recovery and reuse of rolling oils. Oil is the major pollutant in these wastes and all treatment systems are primarily designed for its removal. The various treatment systems are listed here according to the degree of treatment they provide.

1. The simplest attempt to remove the oil from cold rolling wastewater was to divert the water through a scale pit. Free floating oil was removed by a skimmer, some oil would adhere to the scale and settle and the emulsified oils passed through the pit and were discharged to the receiving stream.

2. Oil separators specifically designed for the removal of the particular rolling oil replaced the scale pit, with some attempt to break the emulsions and remove as much of this oil as possible. Emulsified oils were still discharged to the receiving stream in significant quantities.

3. A refinement to Step 2 to include chemical addition, flocculation, air flotation, and surface skimming followed by discharge to the receiving stream.

4. Utilization of spent pickle liquor to acidify the wastewater and break the emulsion. The oil is removed by an oil separator. The water is neutralized with lime, mixed with other mill wastewater and clarified prior to discharging to the receiving stream. Some mills discharge the clarified water into a retention lagoon prior to discharging to the receiving stream.

5. Another modification to the aforementioned system is to collect the spent rolling oil emulsions in a storage tank along with other oil-bearing wastewater generated in the cold rolling operation. Some floating oil is removed in this tank. The wastewater from the tank is metered to a mixing tank where spent pickle liquor is added to break the emulsion. The wastewater then goes to an oil separator to remove the oil. The treated wastewater is then returned to the mill water system and used as makeup water to the gas cleaning system.

Plant Visits

Visits were made to five cold rolling operations. Table presents summary of the plants visited in respect to geographic location, daily production, plant age, and age of the treatment facility. Table 58 presents the plants raw and waste effluent loads.

Plant X-2 - Figure 56. This plant utilizes a combined treatment system for cold rolling and pickling wastewaters. Treatment system consists of air flotation, chemical treatment, clarification, and plant reuse.

Plant BB-2 - Figure 62. This plant combines cold mill wastewater with acid rinse waters, utilizing neutralization, aeration, clarification with polymer addition, lagooning, and discharge to the receiving stream.

Plant DD-2 - Figure 63. This plant practices oil skimming, chemical treatment, sedimentation, and discharge to the receiving stream.

Plant EE-2 - Figure 64. Plant wastewater treatment practice includes equalization, oil skimming, chemical treatment, lagooning, and sewer discharge.

Plant FF-2 - Figure 65. Wastewaters are treated by primary sedimentation, mixing, chemical treatment, and discharge to sewer.

COATING OPERATIONS

The process wastewaters generated during hot coating operations include alkaline and acidic cleaners and their rinses, fume scrubbing wastewaters, and chemical treatment solutions and their rinses. A wide variety of ways to handle coating wastes exists throughout the steel industry, and yet certain basic treatment systems are commonly used much more than others. These are listed here according to the degree of treatment they provide.

1. No matter what wastewater treatment technique, if any, is used, an important first step is to minimize the quantity of wastes requiring treatment. This is accomplished by providing dragout recovery tanks downstream of the main cleaning tanks; by utilizing high pressure spray rinses with recycling of rinse waters where practical; and by careful, even critical, attention to maintenance of equipment such as rolls and squeegees designed to reduce solution losses. Some plants, primarily hot coating lines with their slower line speeds, minimize carryover of wastes so effectively that no treatment of wastewaters is required. Spent

TABLE 58
WATER EFFLUENT TREATMENT COSTS
COLD ROLLING

PLANT	X-2*	BB-2*	DD-2*	DD-2*(Revisit)		RANGE
INITIAL INVESTMENT	1,566,500	1,230,769	3,538,566			
ANNUAL COSTS:						
OPERATING LABOR		35,406	58,258			
UTILITIES	188,900	9,556	151,326	COSTS ARE SAME		
MAINTENANCE		37,918	167,882	AS DD-2, EXCEPT		
DEPRECIATION	156,650	123,077	153,857	FOR $/1000 GAL.		
COST OF CAPITAL	65,793	51,692	148,619			
OTHER	-	-	21,868			
TOTAL	411,343	257,649	901,810			
$/TON	0.724	0.153	0.585			0.153-0.724
$/1000 GAL TRT	40.89	8.64	0.652	1.593		0.652-40.89

*Portion attributed to this subcategory only.

AVERAGE NET PLANT RAW WASTE LOAD

PARAMETERS	lb/TON	mg/l	lb/TON	mg/l	lb/TON	mg/l	lb/TON	mg/l	lb/TON	mg/l	lb/TON	mg/l
Flow (gal./ton)	17.70	-	16.0	-	896	-	367	-			16.0-896	-
Suspended Solids	0.0133	90	0.00733	55	7.11	952	2.091	251			0.00733-7.11	55-952
Oil and Grease	6.058	41,100	0.0884	664	10.45	1,400	4.523	543			0.0884-10.45	354-41,100
Dissolved Iron	0.000177	1.2	0.000007	0.05	0.0582	7.8	0.00666	0.80			0.000007-0.0582	0.05-7.8
pH (units)	-	7.0	-	8.0	-	4.8-6.5	-	6.8			-	4.8-8.1

AVERAGE GROSS PLANT EFFLUENT WASTE LOAD

PARAMETERS	lb/Ton	mg/l	lb/Ton	mg/l	lb/Ton	mg/l	lb/Ton	mg/l	lb/Ton	mg/l	lb/Ton	mg/l
Flow (gal./ton)	17.70	-	16.0	-	896	-	367	-			16.0-896	-
Suspended Solids	0.00295	20	0.000266	2	0.0448	6	0.0306	10			0.00028 -0.0448	2-20
Oil and Grease	0.00059	4.0	0.000799	6	0.0299	4	0.0611	20			0.00058-0.0611	4-20
Dissolved Iron	0.000015	0.10	0.000005	0.04	0.00299	0.40	0.00006	0.02			0.000003 -.00299	0.02-0.40
pH (units)	-	7.8	-	7.7	-	7.6	-	8.4			-	7.6-8.4

PROCESS: COLD ROLLING RECIRCULATION
PLANT: DD-2
PRODUCTION: 1837 METRIC TONS OF STEEL/DAY (2031 TONS OF STEEL/DAY)

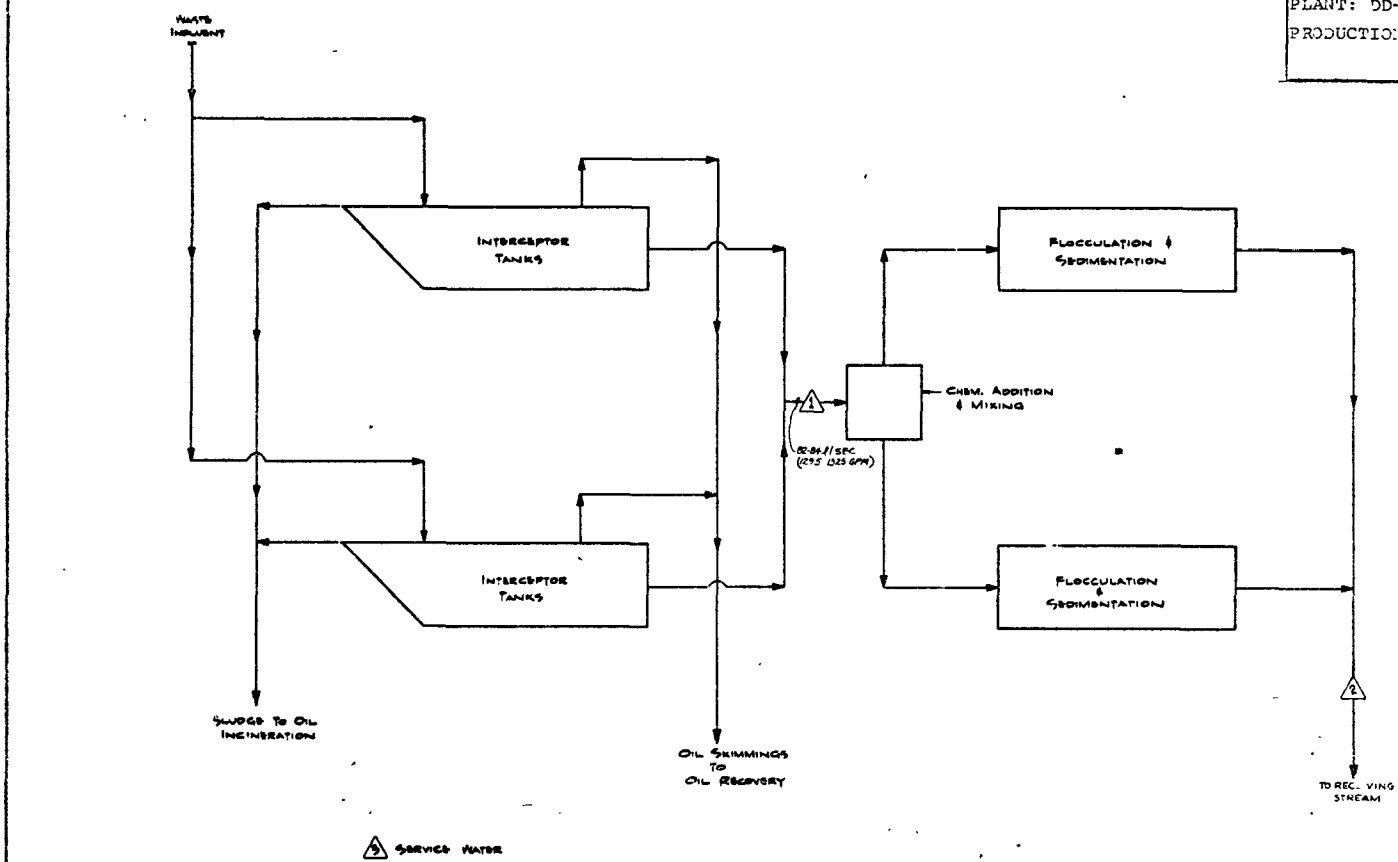

△ SAMPLING POINTS

ENVIRONMENTAL PROTECTION AGENCY
STEEL INDUSTRY STUDY
COLD ROLLING
WASTEWATER TREATMENT SYSTEM
WATER FLOW DIAGRAM

6-6-75 FIGURE 63

PROCESS: COLD ROLLING-RECIRCULATION
PLANT: EE-2
PRODUCTION: 2795 METRIC TONS OF STEEL/DAY (3082 TONS OF STEEL/D. I)

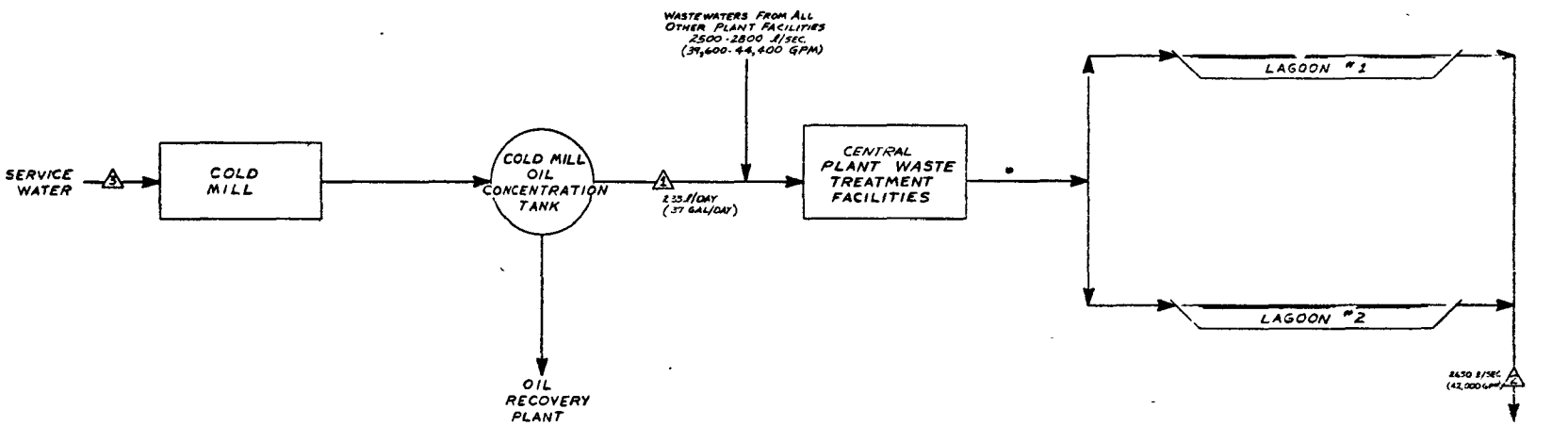

ENVIRONMENTAL PROTECTION AGENCY
STEEL INDUSTRY STUDY
COLD ROLLING
WASTEWATER TREATMENT SYSTEM
WATER FLOW DIAGRAM

6-6-75 FIGURE 64

PROCESS: COLD ROLLING-RECIRCULATION
PLANT: FF-2
PRODUCTION: 3866 METRIC TONS OF STEEL/DAY (4263 TONS OF STEEL/DAY)

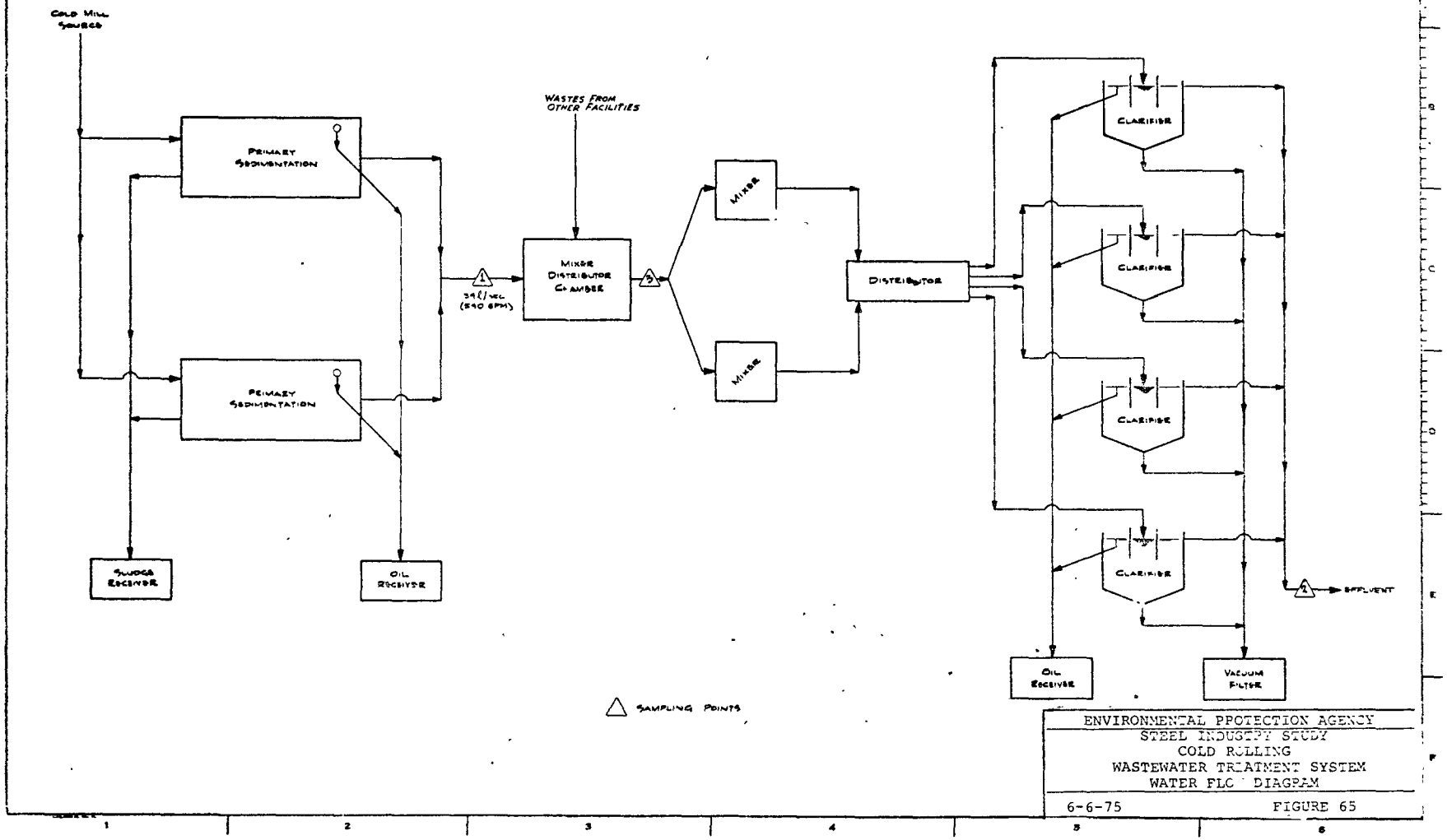

ENVIRONMENTAL PROTECTION AGENCY
STEEL INDUSTRY STUDY
COLD ROLLING
WASTEWATER TREATMENT SYSTEM
WATER FLOW DIAGRAM

6-6-75 FIGURE 65

pickling and cleaning solutions are collected separately for disposal via dumping on wasteland, contract hauling, or deep wells.

2. The simplest treatment of wastewaters from coating operations usually begins with blending acidic and alkaline wastes, then providing space and time for suspended precipitates to settle out. This blending of wastewaters causes oily matter to break out of any emulsified forms present, becoming susceptible to removal via skimming or through adhering to the settleable solids. To avoid slugs of extremely acidic or alkaline wastewaters, the concentrated solutions are collected separately, stored, and then allowed to combine with rinses in predetermined flow ratios to provide the best mixing conditions possible in this relatively crude system.

3. A significant improvement in treatment methods is attained through controlled neutralization of the combined wastewaters, using an alkaline material such as lime or caustic soda to achieve higher pH levels than is possible through simply blending the wastewaters. Normally, a polymer is also used to enhance settling characteristics, and relatively sophisticated clarifiers are installed to efficiently handle the large volumes of metallic hydroxides which precipitate out. Sludges are dewatered using vacuum filtration and go to landfill areas. The effluent waters are suitable for discharge, sometimes requiring a final pH adjustment with acid.

4. Refinements in treatment techniques would depend on the sources of wastewaters handled in the treatment system. These would be tailored to specific needs, for example:

Reduction of Hexavalent Chromium. Coating operations producing chromate or dichromate wastes normally have separate pretreatment stages to reduce toxic Cr^{+6} to Cr^{+3} prior to neutralization. Most often, the ferrous iron from pickling rinse solutions or spent pickle liquors is blended with the chromium wastewaters. In rarer cases, additional reducing agents such as bisulphites or sulfur dioxide gases are used in place of or in addition to pickling wastes. The reduced chromium-containing wastes are then passed along to a controlled neutralization treatment stage, where the addition of lime or caustic soda precipitates all chromium as the hydroxide. Alternatively, the chromates may be precipitated out of solutions by the addition of barium salts, such as sulfates or carbonates. A precipitate of barium chromate is separated out for subsequent separate recovery of barium and chromium. Also, ion exchange

techniques can be utilized to recover clean chromic acid from strong solutions contaminated by iron and trivalent chromium. The recovered acid is reused in the plating or chemical treatment operations.

5. Joint treatment systems combining wastewaters from many different sources into one terminal treatment plant are becoming increasingly common. In these, wastewaters from coating operations usually represent a minor portion of the total flow. Such terminal treatment systems may incorporate any or all of the individual pretreatment stages mentioned above.

Plant Visits

Visits were made to nine different plant locations to study the individual operations included under the coating category. Tables 13 and 14 present the summary of the plants visited in respect to geographic location, daily production, plant age, and age of the treatment facility. Tables 59, and 60 presents the plants raw and waste effluent loads.

Plant I-2 - Figure 29. This plant treats coating wastewaters by dilution and reaction with other mill wastes in a terminal lagoon, with subsequent discharge to the receiving stream.

Plant MM-2 - Figure 66. This plant combines all coating wastewaters with wastes from other sources. Treatment includes equalization, oil separation, aeration, sedimentation, lagooning, and recirculation to service water with intermittent blowdown to river.

Plant NN-2 - Figure 67. This plant utilizes equalization, mixing, two-stage lime addition, polymer feed, and clarification for treatment of coating wastewaters. Clarifier underflows are vacuum filtered, then used as landfill. Overflows are discharged to the receiving stream.

Plant OO-2 - Figure 68. This plant utilizes mixing and dilution of rinse waters prior to discharge. Solution dragout is minimized through strict attention to maintenance of equipment.

Plant PP-2 - Figure 69. This plant utilizes mixing and dilution or rinse waters prior to river discharge. Solution dragout is minimized through strict attention to maintenance of equipment.

TABLE 59
WATER EFFLUENT TREATMENT COSTS
HOT COATINGS - GALVANIZING

PLANT	I-2*	V-2	MM-2*	NN-2		RANGE
INITIAL INVESTMENT	8,600		567,470	902,000		
ANNUAL COSTS:						
OPERATING LABOR	-	COSTS FOR	8,022			
UTILITIES	-	GALVANIZING	25,756	77,778		
MAINTENANCE	135	OPERATION NOT	11,260			
DEPRECIATION	860	PROVIDED BY	56,747	90,200		
COST OF CAPITAL	361	COMPANY	23,833	37,884		
OTHER	82		22,096	-		
TOTAL	1,438		147,714	205,862		
$/TON	0.334		0.824	0.452		0.334-0.824
$/1000 GAL TRT	1.52		1.536	0.366		0.366-1.536

*Portion attributed to this subcategory only.

AVERAGE NET PLANT RAW WASTE LOAD

PARAMETERS	lb/TON	mg/l	lb/TON	mg/l	lb/TON	mg/l	lb/TON	mg/l	lb/TON	mg/l	lb/TON	mg/l
Flow (gal./ton)	220	-	4,430	-	537	-	1,234	-			220-4,430	-
Suspended Solids	0.176	96	0.590	16	0.671	150	1.007	98			0.176-1.007	16-150
Oil and Grease	0.0044	2.4	0.185	5	0.157	35	0.195	19			0.0044-0.195	2.4-35
Zinc	-	-	-	-	0.00009	0.02	1.490	145			0.00009-1.490	0.02-145
Total Chromium	-	-	-	-	0.0939	21	0.0185	1.8			0.0185-0.0939	1.8-21
Hexavalent Chromium	-	-	-	-	0.000013	0.003	0.000093	0.009			0.000013-0.000093	0.003-0.009
pH (units)	-	5.0	-	2.5	-	1.2-11.2	-	2			-	1.2-11.2

AVERAGE GROSS PLANT EFFLUENT WASTE LOAD

PARAMETERS	lb/Ton	mg/l	lb/Ton	mg/l	lb/Ton	mg/l	lb/Ton	mg/l	lb/Ton	mg/l	lb/Ton	mg/l
Flow (gal./ton)	220	-	4,430	-	537	-	1,234	-			220-4,430	-
Suspended Solids	0.0715	39	10.18	276	0.268	60	0.0411	4			0.0411-10.18	4-276
Oil and Grease	0.0257	14	0.332	9	0.101	22.5	0.103	10			0.0257-0.332	9-22.5
Zinc	-	-	-	-	0.00018	0.04	0.0154	1.5			0.00018-0.0154	0.04-1.5
Total Chromium	-	-	-	-	0.00385	0.86	0.00031	0.03			0.00031-0.00385	0.03-0.86
Hexavalent Chromium	-	-	-	-	0.000022	0.005	0.00012	0.012			0.000022-0.00012	0.005-0.012
pH (units)	-	6.7	-	2.5	-	4.1-11.5	-	7.9			-	2.5-11.5

TABLE 60
WATER EFFLUENT TREATMENT COSTS
HOT COATINGS - TERNE PLATE

PLANT	OO-2	PP-2				RANGE
INITIAL INVESTMENT	-	-				
ANNUAL COSTS:						
OPERATING LABOR						
UTILITIES						
MAINTENANCE	NO	NO				
DEPRECIATION	TREATMENT	TREATMENT				
COST OF CAPITAL						
OTHER						
TOTAL						
/TON	-	-				
/1000 GAL TRT	-	-				

AVERAGE NET PLANT RAW WASTE LOAD

PARAMETERS	lb/TON	mg/l	lb/TON	mg/l	lb/TON	mg/l	lb/TON	mg/l	lb/TON	mg/l	lb/TON	mg/l
Flow (gal./ton)	516	-	2,194	-							516-2,194	-
Suspended Solids	0.206	48	0.146	8							0.146-0.206	8-48
Lead	0.000860	0.20	<0.0009	<0.05							0.00086-<0.0009	<0.05-0.20
Oil and Grease	0.0430	10	0.0548	3.0							0.0430-0.0548	3-10
Tin	<0.0086	<2	<0.0365	<2							<0.0086-<0.0365	<2
pH (units)	-	2.2-4.1	-	3.6-5.2							-	2.2-5.2

AVERAGE GROSS PLANT EFFLUENT WASTE LOAD

PARAMETERS	lb/Ton	mg/l	lb/Ton	mg/l	lb/Ton	mg/l	lb/Ton	mg/l	lb/Ton	mg/l	lb/Ton	mg/l
Flow (gal./ton)	516	-	2,194	-							516-2,194	-
Suspended Solids	0.219	51	0.164	9							0.164-0.219	9-51
Lead	0.00108	0.25	<0.0009	<0.05							<0.0009-<0.00108	<0.05-0.25
Oil and Grease	0.0559	13	0.0786	4.3							0.0559-0.0786	4.3-13
Tin	<0.0086	<2	<0.0365	<2							<0.0086-<0.0365	<2
pH (units)	-	2.2-4.1	-	3.6-5.2							-	2.2-5.2

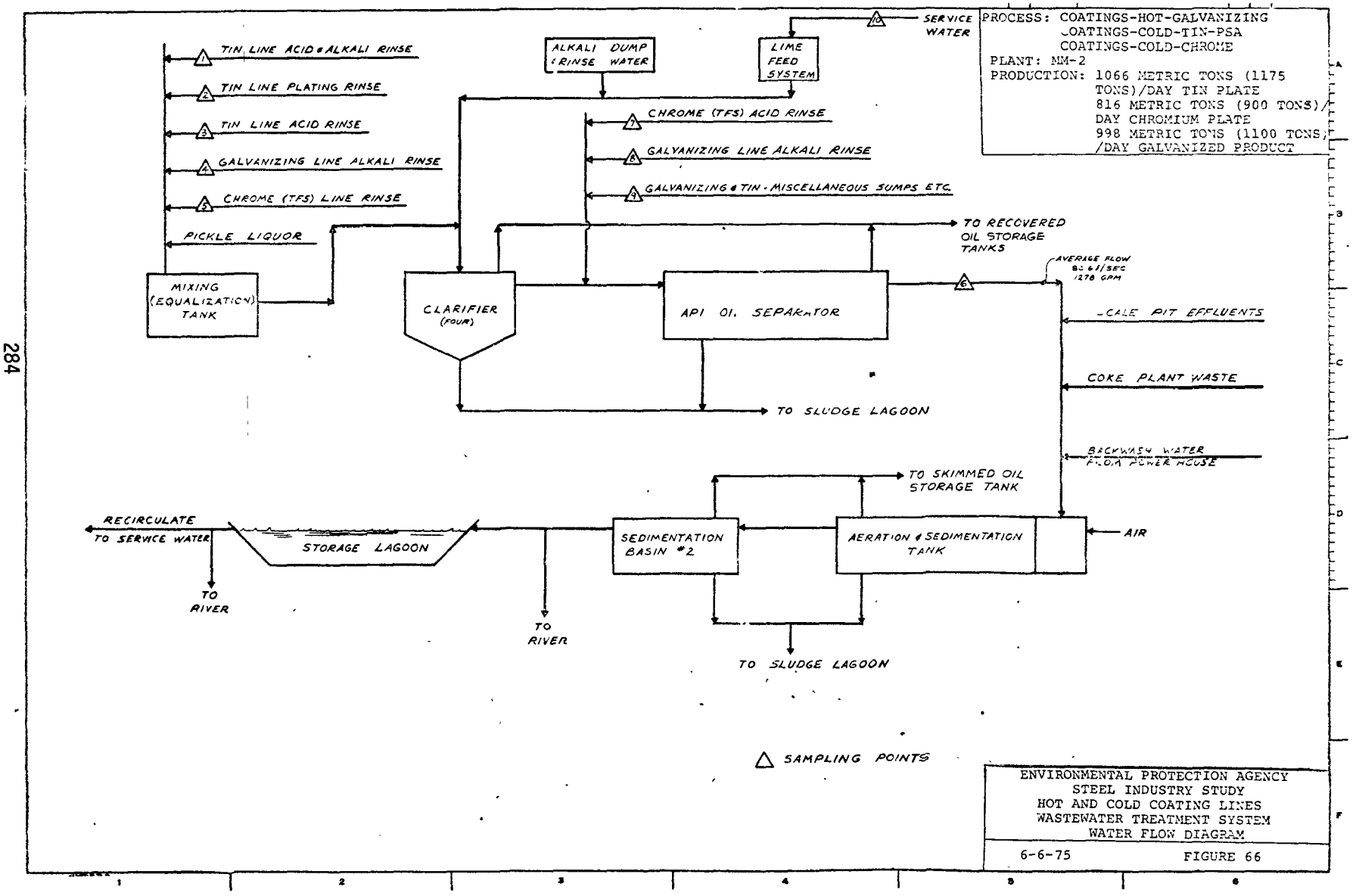
PROCESS: COATINGS-HOT-GALVANIZING
COATINGS-COLD-TIN-PSA
COATINGS-COLD-CHROME
PLANT: MM-2
PRODUCTION: 1066 METRIC TONS (1175 TONS)/DAY TIN PLATE
816 METRIC TONS (900 TONS)/DAY CHROMIUM PLATE
998 METRIC TONS (1100 TONS)/DAY GALVANIZED PRODUCT
SERVICE WATER
TIN LINE ACID & ALKALI RINSE
TIN LINE PLATING RINSE
TIN LINE ACID RINSE
GALVANIZING LINE ALKALI RINSE
CHROME (TFS) LINE RINSE
PICKLE LIQUOR
ALKALI DUMP & RINSE WATER
LIME FEED SYSTEM
CHROME (TFS) ACID RINSE
GALVANIZING LINE ALKALI RINSE
GALVANIZING & TIN - MISCELLANEOUS SUMPS ETC.
TO RECOVERED OIL STORAGE TANKS
AVERAGE FLOW 80 & 1/SEC 1270 GPM
MIXING (EQUALIZATION) TANK
CLARIFIER (FOUR)
API OIL SEPARATOR
SCALE PIT EFFLUENTS
COKE PLANT WASTE
BACKWASH WATER FROM POWER HOUSE
TO SLUDGE LAGOON
TO SKIMMED OIL STORAGE TANK
RECIRCULATE TO SERVICE WATER
STORAGE LAGOON
SEDIMENTATION BASIN #2
AERATION & SEDIMENTATION TANK
AIR
TO RIVER
TO RIVER
TO SLUDGE LAGOON
SAMPLING POINTS
ENVIRONMENTAL PROTECTION AGENCY
STEEL INDUSTRY STUDY
HOT AND COLD COATING LINES
WASTEWATER TREATMENT SYSTEM
WATER FLOW DIAGRAM
6-6-75
FIGURE 66

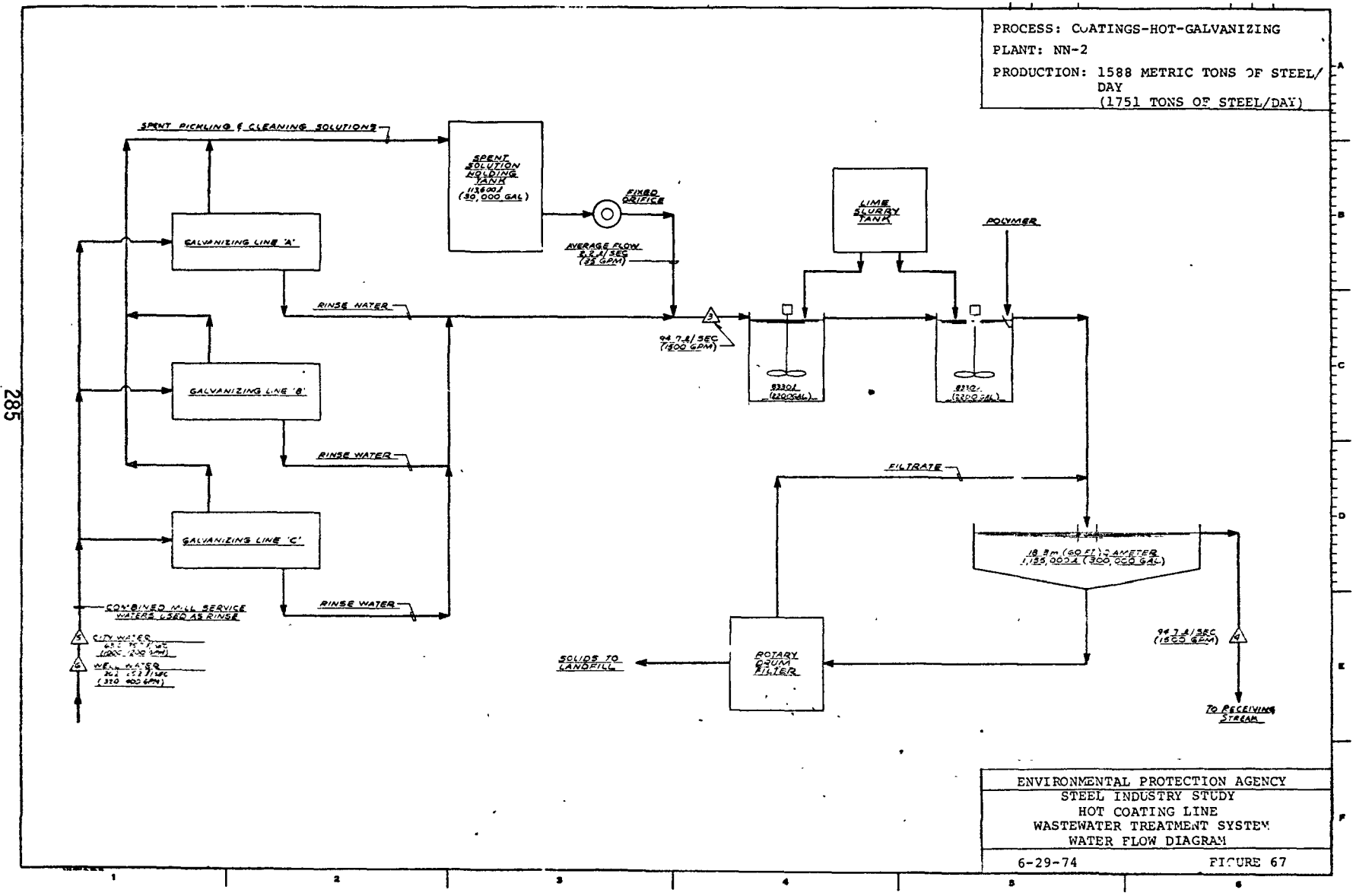
PROCESS: COATINGS-HOT-GALVANIZING
PLANT: NN-2
PRODUCTION: 1588 METRIC TONS OF STEEL/DAY
(1751 TONS OF STEEL/DAY)
SPENT PICKLING & CLEANING SOLUTIONS
SPENT SOLUTION HOLDING TANK
FIXED ORIFICE
AVERAGE FLOW
LIME SLURRY TANK
POLYMER
GALVANIZING LINE 'A'
RINSE WATER
GALVANIZING LINE 'B'
RINSE WATER
GALVANIZING LINE 'C'
RINSE WATER
COMBINED MILL SERVICE WATERS USED AS RINSE
CITY WATER
WELL WATER
FILTRATE
ROTARY DRUM FILTER
SOLIDS TO LANDFILL
TO RECEIVING STREAM
ENVIRONMENTAL PROTECTION AGENCY
STEEL INDUSTRY STUDY
HOT COATING LINE
WASTEWATER TREATMENT SYSTEM
WATER FLOW DIAGRAM
6-29-74
FIGURE 67

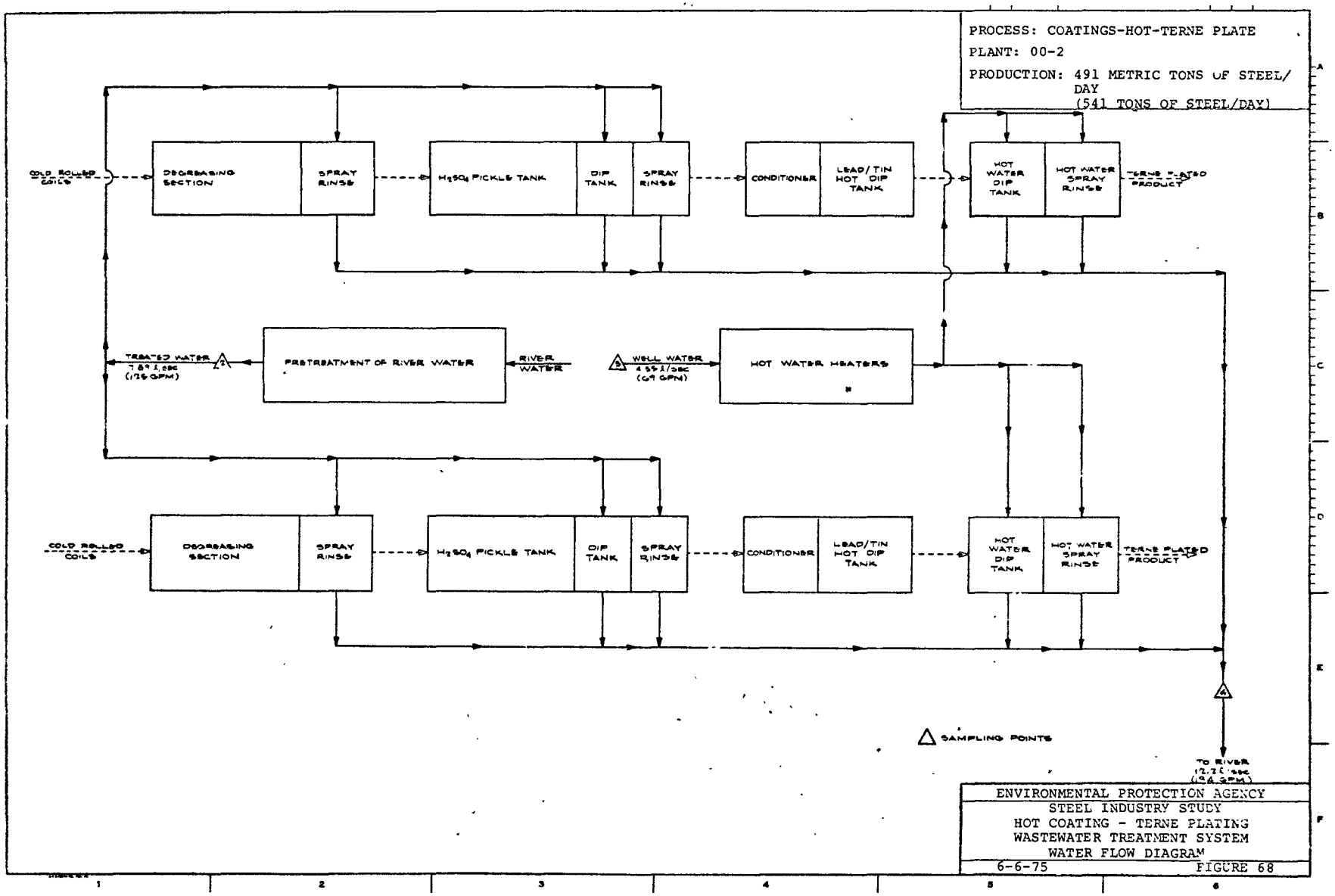
PROCESS: COATINGS-HOT-TERNE PLATE
PLANT: 00-2
PRODUCTION: 491 METRIC TONS OF STEEL/ DAY
(541 TONS OF STEEL/DAY)
COLD ROLLED COILS
DEGREASING SECTION
SPRAY RINSE
H_2SO_4 PICKLE TANK
DIP TANK
SPRAY RINSE
CONDITIONER
LEAD/TIN HOT DIP TANK
HOT WATER DIP TANK
HOT WATER SPRAY RINSE
TERNE PLATED PRODUCT
TREATED WATER
7.89 l/sec
(125 GPM)
PRETREATMENT OF RIVER WATER
RIVER WATER
WELL WATER
4.55 l/sec
(69 GPM)
HOT WATER HEATERS
COLD ROLLED COILS
DEGREASING SECTION
SPRAY RINSE
H_2SO_4 PICKLE TANK
DIP TANK
SPRAY RINSE
CONDITIONER
LEAD/TIN HOT DIP TANK
HOT WATER DIP TANK
HOT WATER SPRAY RINSE
TERNE PLATED PRODUCT
SAMPLING POINTS
TO RIVER
12.72 l/sec
(194 GPM)
ENVIRONMENTAL PROTECTION AGENCY
STEEL INDUSTRY STUDY
HOT COATING - TERNE PLATING
WASTEWATER TREATMENT SYSTEM
WATER FLOW DIAGRAM
6-6-75
FIGURE 68

PROCESS: COATINGS-HOT-TERNE PLATE
PLANT: TT-2
PRODUCTION: 476 METRIC TONS OF STEEL/ DAY
(525 TONS OF STEEL/DAY)

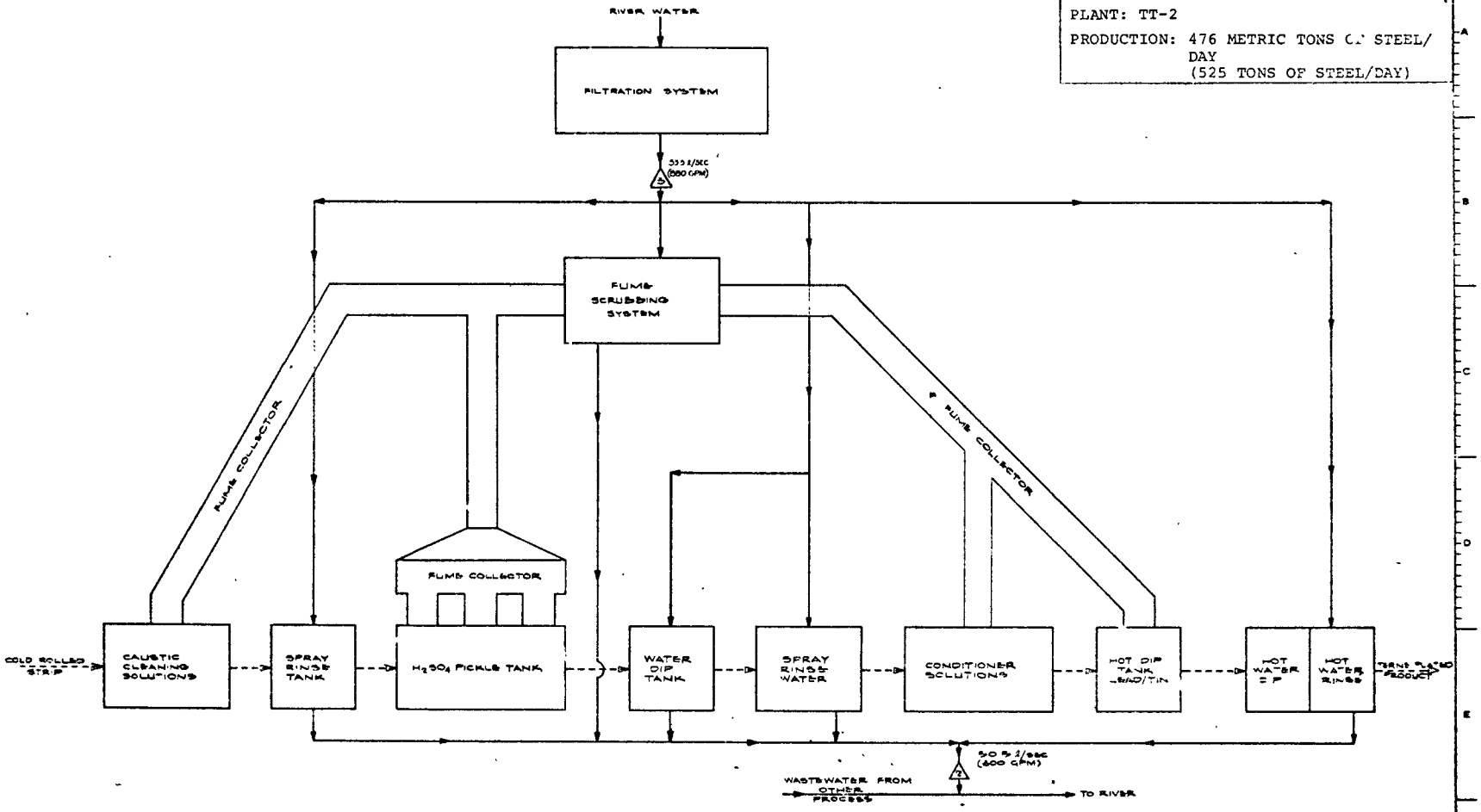

ENVIRONMENTAL PROTECTION AGENCY
STEEL INDUSTRY STUDY
HOT COATING-TERNE PLATING
WASTEWATER TREATMENT SYSTEM
WATER FLOW DIAGRAM

6-6-75 FIGURE 69

Plant QQ-2 - Figure 70. This plant treats coating wastewaters with separate chrome treatment and recovery, fluoride precipitation with lime, equalization, clarification, flocculation, sedimentation, and discharge to the receiving stream.

Plant RR-2 - Figure 71. This plant treats coating wastewaters with chrome precipitation using barium salts, equalization, mixing with acid wastes, neutralization, clarification, detention, additional lagooning, and discharge to the receiving stream.

Plant SS-2 - Figure 72. At this plant, coating wastewaters and other plant wastewaters are discharged to a terminal treatment plant for chemical treatment, aeration, oil skimming, settling, and discharge.

Plant TT-2 - Figure 73. Coating wastewaters at this plant are treated by mixing and diluting of all rinses prior to discharge to the river. Solution dragout is minimized through strict attention to maintenance of equipment.

SPECIFIC PARAMETER DISCUSSION

Acidity and Alkalinity

Acidity and alkalinity are arbitrary terms used to express a wastewater's reactive capacity towards hydroxyl and hydrogen ions respectfully in terms of a common substance.

The purpose of the test, and its common terminology, is to facilitate the calculation of equivalent amounts of any substance (acid or base) required to neutralize the acidic or alkaline components in a water or waste stream.

The test used is an acid base titration with arbitrary end points based on the carbonate/bicarbonate ion and its critical conversion points of pH 4.6 for the irreversible reaction and pH 8.5 for the reversible reaction.

Through application of the titrametric data, free acids, total acidity, bicarbonate alkalinity, carbonate alkalinity, and free hydroxide concentrations can be estimated.

Aside from common acids, alkalies, and the ever present carbonate ion, many other substances found in steel mill wastes, such as heavy metal ions (Fe, Zn, Al, etc.) phosphates, silicates, ammonium compounds, etc., have the ability to react with hydrogen and hydroxyl ions.

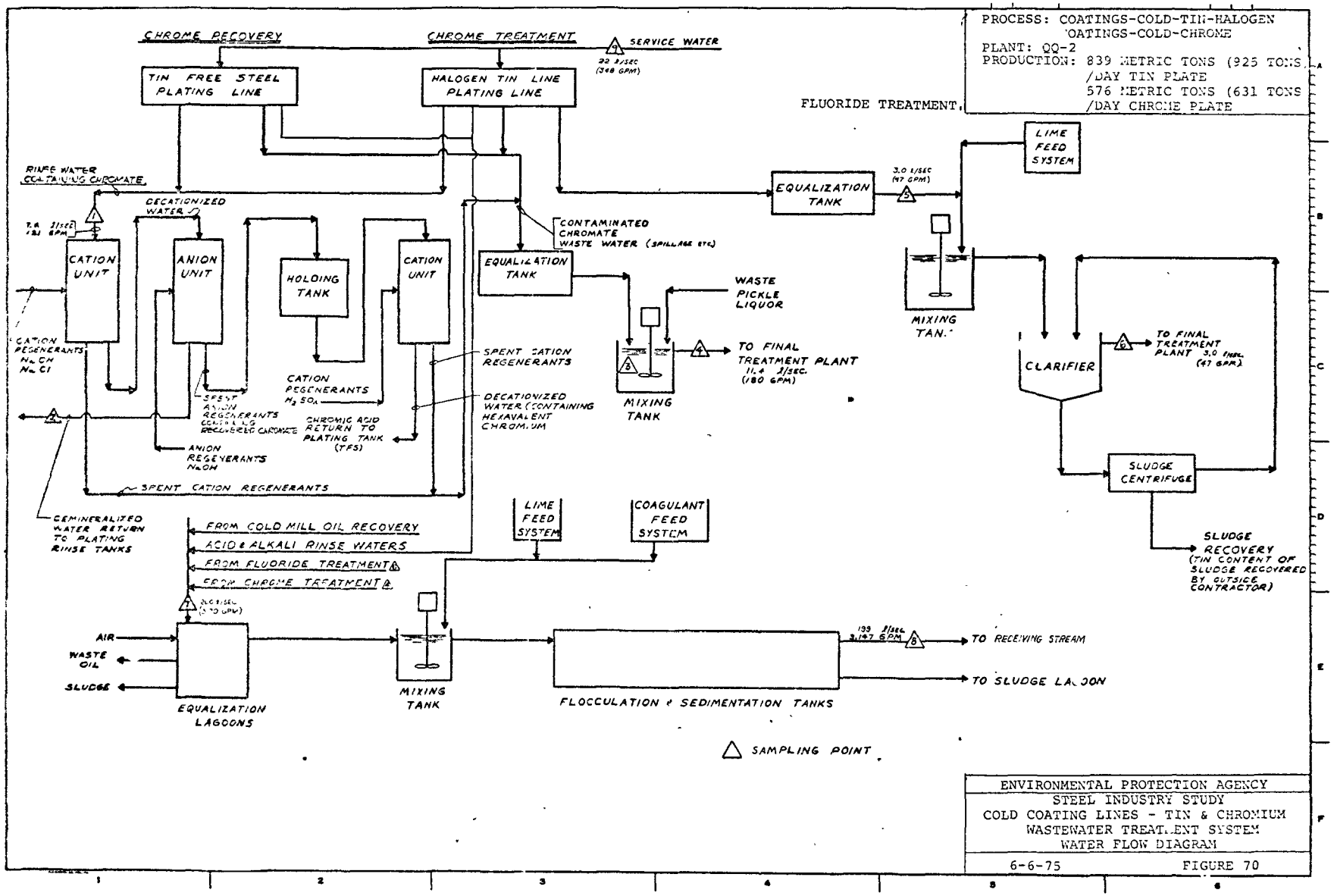
PROCESS: COATINGS-COLD-TIN-HALOGEN
COATINGS-COLD-CHROME
PLANT: QQ-2
PRODUCTION: 839 METRIC TONS (925 TONS /DAY TIN PLATE
576 METRIC TONS (631 TONS /DAY CHROME PLATE
CHROME RECOVERY
CHROME TREATMENT
SERVICE WATER
22 l/sec (348 GPM)
TIN FREE STEEL PLATING LINE
HALOGEN TIN LINE PLATING LINE
FLUORIDE TREATMENT
RINSE WATER CONTAINING CHROMATE
DECATIONIZED WATER
CONTAMINATED CHROMATE WASTE WATER (SPILLAGE ETC)
EQUALIZATION TANK
3.0 l/sec (47 GPM)
LIME FEED SYSTEM
CATION UNIT
ANION UNIT
HOLDING TANK
CATION UNIT
EQUALIZATION TANK
WASTE PICKLE LIQUOR
MIXING TANK
TO FINAL TREATMENT PLANT 11.4 l/sec. (180 GPM)
MIXING TANK
CLARIFIER
TO FINAL TREATMENT PLANT 3.0 l/sec. (47 GPM)
CATION REGENERANTS
SPENT CATION REGENERANTS
CATION REGENERANTS
SPENT ANION REGENERANTS CONTAINING RECOVERED CHROMATE
CHROMIC ACID RETURN TO PLATING TANK (TFS)
DECATIONIZED WATER (CONTAINING HEXAVALENT CHROMIUM
ANION REGENERANTS
SPENT CATION REGENERANTS
SLUDGE CENTRIFUGE
DEMINERALIZED WATER RETURN TO PLATING RINSE TANKS
FROM COLD MILL OIL RECOVERY
ACID & ALKALI RINSE WATERS
FROM FLUORIDE TREATMENT
FROM CHROME TREATMENT
LIME FEED SYSTEM
COAGULANT FEED SYSTEM
SLUDGE RECOVERY (TIN CONTENT OF SLUDGE RECOVERED BY OUTSIDE CONTRACTOR)
AIR
WASTE OIL
SLUDGE
EQUALIZATION LAGOONS
MIXING TANK
FLOCCULATION & SEDIMENTATION TANKS
139 l/sec 3,147 GPM
TO RECEIVING STREAM
TO SLUDGE LAGOON
SAMPLING POINT
ENVIRONMENTAL PROTECTION AGENCY
STEEL INDUSTRY STUDY
COLD COATING LINES - TIN & CHROMIUM
WASTEWATER TREATMENT SYSTEM
WATER FLOW DIAGRAM
6-6-75
FIGURE 70

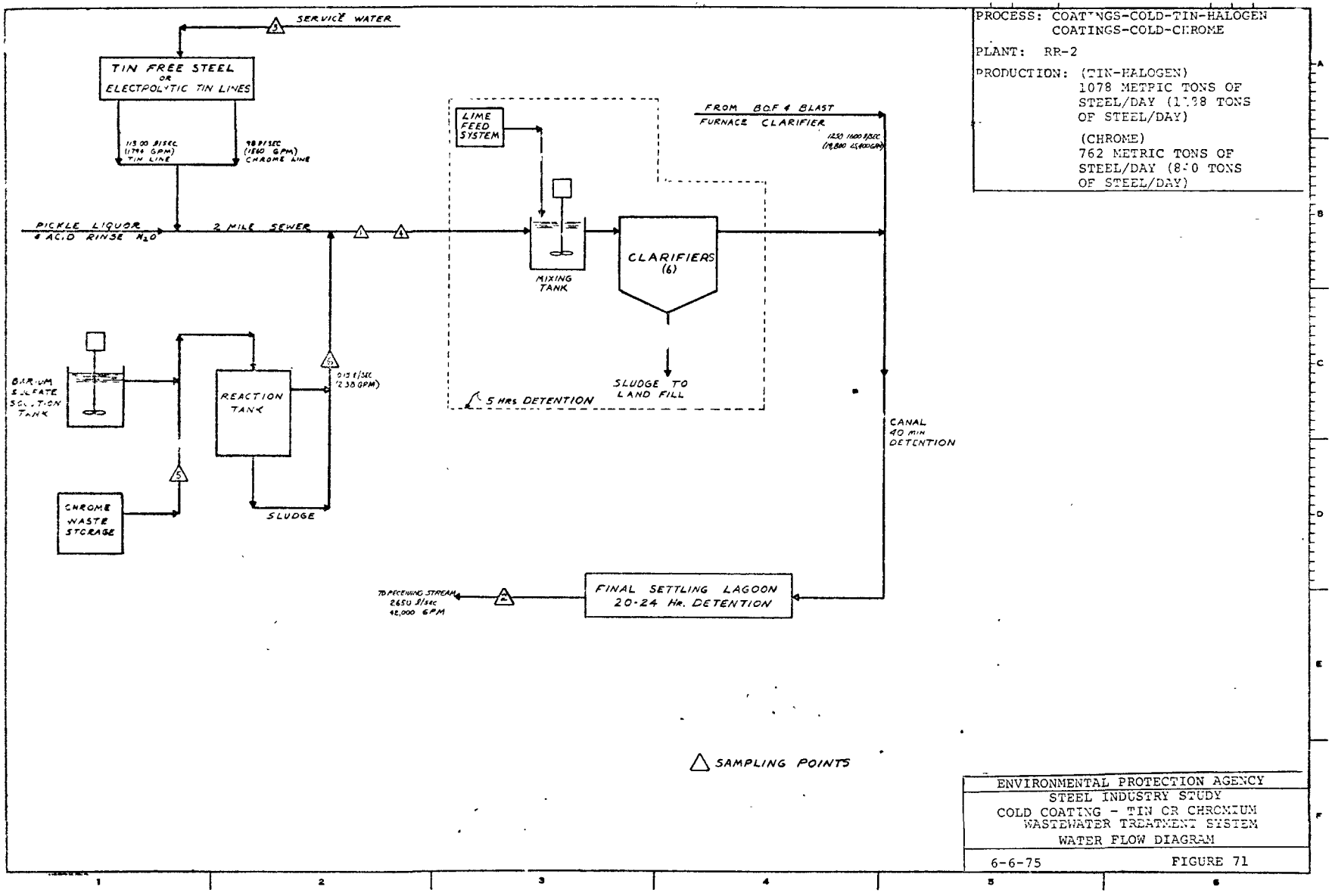

PROCESS: COATINGS-COLD-TIN-HALOGEN
COATINGS-COLD-CHROME

PLANT: RR-2

PRODUCTION: (TIN-HALOGEN)
1078 METRIC TONS OF STEEL/DAY (1188 TONS OF STEEL/DAY)

(CHROME)
762 METRIC TONS OF STEEL/DAY (840 TONS OF STEEL/DAY)

ENVIRONMENTAL PROTECTION AGENCY
STEEL INDUSTRY STUDY
COLD COATING - TIN OR CHROMIUM
WASTEWATER TREATMENT SYSTEM
WATER FLOW DIAGRAM

6-6-75 FIGURE 71

PROCESS: COATINGS-COLD-TIN-ALKALINE
COATINGS-COLD-TIN-HALOGEN
COATINGS-COLD-CHROME

PLANT: SS-2

PRODUCTION: (TIN-ALKALINE)
404 METRIC TONS OF STEEL/DAY
(445 TONS OF STEEL/DAY)
(TIN-HALOGEN)
951 METRIC TONS OF STEEL/DAY
(1049 TONS OF STEEL/DAY)
(CHROME)
951 METRIC TONS OF STEEL/DAY
(1049 TONS OF STEEL/DAY)

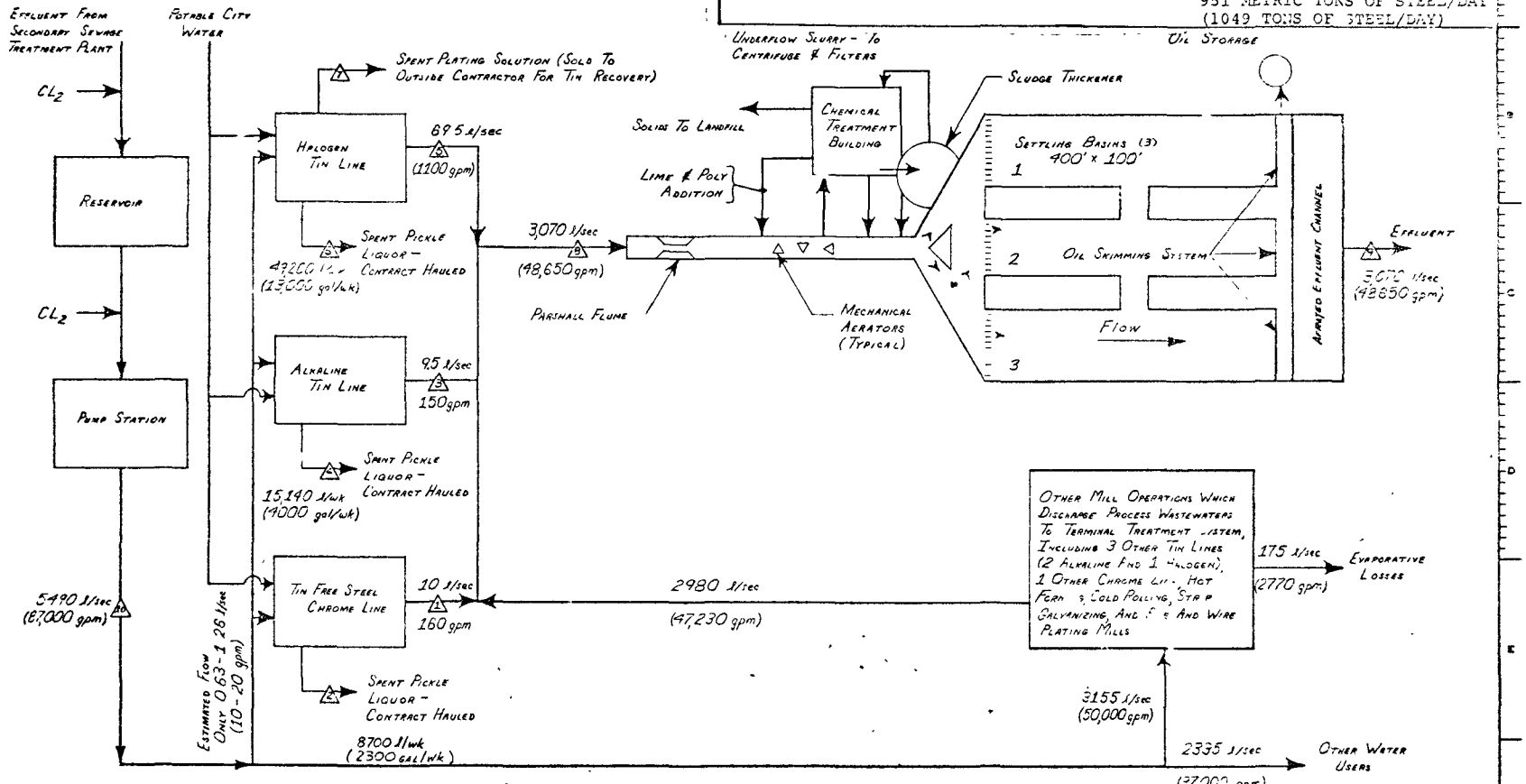

ENVIRONMENTAL PROTECTION AGENCY
STEEL INDUSTRY STUDY
COLD COATING LINES - TIN AND CHROMIUM
WASTEWATER TREATMENT SYSTEM
WATER FLOW DIAGRAM
6-6-75 FIGURE 72

PROCESS: COATINGS-COLD-TIN-SULFONIC
PLANT: TT-2
PRODUCTION: 1006 METRIC TONS OF STEEL/DAY (1109 TONS OF STEEL/DAY)

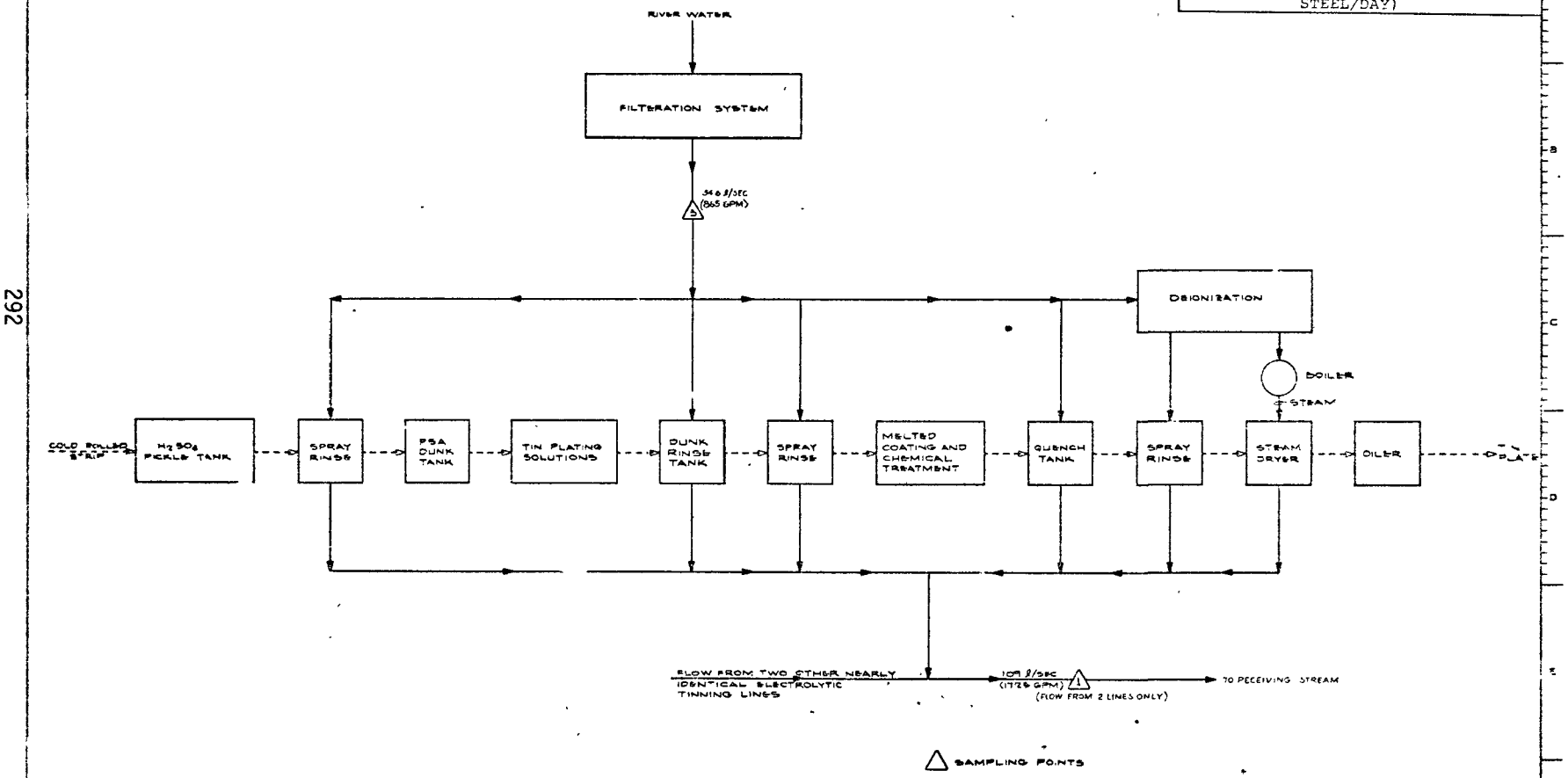

ENVIRONMENTAL PROTECTION AGENCY
STEEL INDUSTRY STUDY
COLD COATING LINE - TIN
WASTEWATER TREATMENT SYSTEM
WATER FLOW DIAGRAM

6-6-75 FIGURE 73

In general, the acid or alkaline capacity of a waste is not the primary basis for treatment prior to discharge, except in some specialized waste situations. In most cases, it is the toxicity or other detrimental qualities of the substance contributing to acidity or alkalinity that is the basis for its removal. An example of this would be in the treatment of heavy metals (Fe, Ni, Cr, etc.) via precipitation as hydroxides.

Three methods of treatment applicable for the disposition of wastes containing high acidity or alkalinity values are as follows:

Blending with Other Wastewaters. This technique is applicable only if sufficient dilution or neutralization capacity is available in the receiving stream such that discharge standards are not exceeded for the acidity, alkalinity, or any component in the waste.

Direct Neutralization with Acids or Bases. This form of treatment is utilized when high concentrations or large volumes of waste are encountered.

Chemical Precipitation. This method is restricted to wastes capable of generating precipitates with chemical treatment. A typical example of this technique would be the precipitation of carbonate alkalinity with calcium.

Chlorides

The chloride ion is an anion that forms highly soluble compounds with most cations. Because of their soluble nature, the analysis of chloride is often used as an indication of the dissolved solids content of a waste providing it is the predominant anion species. Chloride-based compounds are generated in numerous production areas, particularly during the by-product coking operations, some blast furnace operations, the pickling of steel with hydrochloric acid and certain plating operations.

No treatment exists at this time for the economical removal of chlorides from a waste stream, hence reduction or removal of chloride would have to be met by in-plant process control.

Chromium

Chromium is used in the steel industry as a basic ingredient in the manufacture of stainless steel. The percentage of chromium in the steel determines its resistance to corrosion

from various chemicals and atmospheres. In the manufacture of stainless steel, the chromium becomes an integral part of the steel and is not generally found in the wastewater from the hot melting and rolling operations.

Chromium in the form of chromic acid is also used extensively in the steel industry in the electroplating of sheet, strip pipe, and wire to form a protective coating of chromic oxide on the steel. A 5-30 second hot bath of 0.5-1.0% chromic acid follows the normal plating operation to form a layer of chromic oxide which adds additional corrosion resistance to the steel and protects the bright metallic appearance. The length of bath determines the degree of resistance to corrosion. Following the chromic acid bath, the steel is rinsed to remove residual acid. This rinse water becomes polluted with chromic acid and is a treatment and disposal problem.

Several other processes using chromic acid and chromates in combination with other compounds are in use by the industry to prepare the steel for electroplating and/or the application of organic coatings such as paints and lacquers. Some of these processes are Chromodizing, Cronak Treatment, Iridite Treatment, and Anozinc Treatment. Whenever these processes are used or whenever electrolytic tin, chrome (tin-free steel), zinc or galvanized processes are used, a wastewater containing chromic acid will be generated and must be treated before discharge to the receiving waters.

There are four treatment systems for the recovery or treatment of chrome-bearing waste currently in use in the industry. These systems are (1) reduction of the Cr^{+6} to Cr^{+3} and precipitation with lime, (2) recovery by ion exchange, (3) evaporative recovery systems, and (4) the M&T Process which precipitates the Cr^{+6} in the hexavalent form using a proprietary compound. Each of these systems and combinations thereof, when properly operated, produce a suitable effluent for discharge to the local receiving waters.

Reduction and Precipitation. The reduction of hexavalent chromium to the trivalent form and precipitation with lime is most generally used to treat those waters being discharged from a plant. In this process, the pH of the chrome-bearing wastewater is lowered to 2-3 using sulfuric acid or spent pickle liquor. At this point, a variety of reducing agents can be used to reduce the Cr^{+6} to Cr^{+3}. These include anhydrous sodium bisulfite (sodium metabisulfite or ABS), sodium sulfite, sulfur dioxide, ferrous sulfate, and organic materials such as sugar and

methyl alcohol. In the steel industry waste pickle liquor is generally used, for it normally contains sufficient ferrous iron to reduce the chrome to the trivalent form. At a pH of 2 this reaction is practically instantaneous and is noted by the change in color from yellow to green.

At this point, the chrome is in a soluble trivalent form. In order to remove the chrome from the solution, the pH is raised to 8.5-9 using lime, at which point insoluble hydrous chromic oxide rapidly precipitates, and can be removed in a settling basin. The treated water is satisfactory for discharge. Dolomite lime and caustic soda may also be used to precipitate the chromic oxide; however, when using caustic soda the chromic oxide tends to go back to solution, while the dolomite lime produces a lighter weight, less dense sludge which is more difficult to settle and remove.

The reduction and precipitation of hexavalent chrome is the most flexible system of those in use. It is readily adaptable to continuous or batch operations and can handle dilute or concentrated solutions with little difficulty. Equipment costs and operating manpower are at a minimum. However, the ultimate disposal of the chromic sludge presents a problem.

Whenever chrome recovery systems are in use, chrome-bearing wastes not suitable for recovery are still generated and must be disposed of by other methods. These wastes, resulting from spillage in the plating room, leaking pump seals, backwash wastes, and general clean-up, are contaminated with oil and suspended solids which could poison the recovery system. As a result, chrome reduction systems are also used in conjunction with recovery systems to treat those wastewaters not suitable for recovery.

Ion Exchange. Ion exchange resins are used in the steel industry in several different ways to recover chromate from plating wastes and rinse waters for reuse and for the production of demineralized water for use in rinsing operations. The resins are sensitive to pH and chromate concentration making pH control necessary and making it necessary to provide a means to control chromate concentrations in the waste to be treated. They work best on dilute solutions (under 500 ppm), and can be used to recover concentrated plating solutions if properly diluted. Spent regenerant solutions contain traces of hexavalent chrome and must be treated before being discharged.

Three basic schemes utilizing ion exchange techniques can be applied to recover hexavalent chromium: (1) using an anion

resin, selectively absorb Cr^{+6} from the wastewater and discharge the water; (2) using a cation resin, selectively absorb the metal ions from the water while passing the Cr^{+6} ion. Concentrate the treated water to recover the chromium; (3) using two ion exchange units in series, remove metallic ion in a cation exchanger while passing the Cr^{+6} ion and absorb the Cr^{+6} ion on an anion resin. Demineralized water is returned to the rinse line for recycle and reuse. The spent regenerant solution from the anion resin is passed through a cation resin to recover chromic acid free of metallic ions and suitable for reuse in the plating operations.

(1) Certain anion resins have the ability to selectively absorb hexavalent chrome while allowing the metallic ions to pass on through. By using sodium chloride and sodium hydroxide to regenerate the resin, the chromate can be recovered in a suitable form for reuse in a cooling tower system. This system recovers 90-95% of the chrome in the waste, but a chrome reduction system may still be required to further treat this waste before discharge. This system is most applicable to treating cooling tower blowdown for the recovery and reuse of chrome.

(2) The use of a cation exchange unit followed by an evaporative recovery system recovers chromic acid suitable for reuse in plating baths, and provides distilled water for reuse in the final rinse tank. The key to success of this process is to treat as small a volume of concentrated waste as possible. It is essential that waste volumes be minimized by practicing countercurrent rinsing operations. The overflow from the concentrated rinse tank is fed to the cation exchanger and the condensate from the evaporative recovery system is the fresh (distilled) water makeup to the rinse system providing complete recycle of the rinse waters. The concentrated chromic acid in the evaporator is suitable for reuse in the plating tank. Spent regenerants from the cation unit must be treated to remove traces of Cr^{+6}.

The cation exchanger removes the metallic ions but not the Cr^{+6} from the wastewater prior to the evaporative recovery unit. These metallic ions would poison the plating solution or reduce its life if they were returned to the plating tank. It is essential, therefore, that they be removed from the waste stream before any effort is made to recover the chrome.

The effluent from the cation exchanger containing Cr^{+6} is fed to a continuous evaporator where heat is applied and water boiled off (evaporated) from the wastewater until a

chromic acid of a concentration suitable for returning to the plating tank is obtained. This is collected in a storage tank and returned to the plating bath as required. The water condensed from the evaporator is a high quality distilled water and is reused as makeup water to the final rinse tank.

The use of a cation exchanger and evaporative recovery system represents complete recycle of the rinse water. There is, however, in any process, spillage, pump leakage, and clean-up water that contain oil and suspended matter that cannot be recycled. In addition, the spent regenerant of the cation exchanger must be treated. These wastes must be treated via reduction of Cr^{+6} to Cr^{+3} and precipitation to remove hexavalent chrome before discharging these waters. In this system, the final volume of water requiring treatment is considerably smaller than the original waste stream, and chromic acid is recovered in usable form.

(3) Chromic acid can also be recovered by the exclusive use of ion exchange. In this system, the chrome-bearing wastewater first passes through a cation exchanger for the removal of the metallic ions as described above. Cr^{+6} is not removed. It then passes through an anion exchanger where the Cr^{+6} is removed. The water, now demineralized, is used as makeup water for the final rinse tank on the plating line.

The cation exchanger is regenerated using a solution of sodium chloride and sodium hydroxide. The spent regenerant must be further treated in a chrome reduction system to remove the final traces of Cr^{+6}. The anion exchanger is regenerated with sodium hydroxide and the spent regenerant is fed to another cation exchanger that converts it to chromic acid suitable for reuse in the plating tank. This system prolongs the life of the plating bath, and makes it possible to recover the chrome in the spent plating solutions by bleeding the spent solution into the recovery system at a controlled rate. The regenerant from the second cation unit must be further treated to remove traces of Cr^{+6}.

Here again other chrome-bearing wastes not suitable for recovery by ion exchange, as well as spent cation regenerating solutions must be treated in a chrome reduction system to remove the final traces of chromium.

Evaporative Recovery. Evaporative recovery systems can be used exclusively for the direct recovery of chromic acid from concentrated rinse water. Here again, as in ion

exchange systems, countercurrent rinsing systems should be used to minimize water volumes to be concentrated and to provide as concentrated a feed as possible to the evaporator.

The concentrated rinse water is fed into an evaporator, where heat is applied and the rinse water concentrated by boiling off water as steam. This continues until the rinse water concentration is the same as the plating bath, when it is transferred to a storage tank and used as makeup to the plating solution. The steam is condensed and is reused as distilled water makeup to the final rinse tank.

The evaporative recovery systems not only recover chrome for reuse in the plating bath, they also concentrate the metallic ions that were in the rinse water, and these are also returned to the plating bath. These metallic ions adversely affect the plating operation and limit the life of the plating solution, making it necessary to frequently change the plating bath.

Here again, leaking pumps, spillage, and spent plating solutions not suitable for recovery must be treated before discharge and a chrome reduction treatment system is required.

M&T Process. The M&T Process uses a proprietary compound to directly precipitate the chromium in the hexavalent form. This process is suitable for batch or continuous operation; however, due to the cost of the proprietary chemical, this system is generally applied only to low volume waste. Advantages of this system are that equipment requirements are at a minimum, the sludge generated settles rapidly, and the volume of sludge generated is only 10% of the sludge generated using the reduction process.

The composition of the proprietary compound is unknown; however, it is known that the complete precipitation of hexavalent chromium can be accomplished by treating chromium wastewater with soluble salts of lead or barium nitrate, chloride or acetate. There exists, however, the possibility of carryover of these lead and barium salts that could prove to be more toxic than the Cr^{+6}.

The M&T Process makes no attempt to recover chromium; however, it could be used in place of the reduction and precipitation process for removing chrome from small volumes of rinse waters and disposing of plating solutions. The reduction in the amount of equipment required and the low volume of sludge generated (10% of the reduction process) by

the M&T Process may offset the increased chemical costs where sludge disposal is a problem.

The chrome recovery and precipitation processes described here are in use in the steel industry today. The chrome recovery systems not only reduce the volume of waste treated and the volume of sludge for disposal, they recover the costly chrome for reuse and provide a high quality rinse water. Most mills also have a reduction and precipitation process to treat those wastes not suitable for recovery. Spent concentrated plating solutions are disposed of by bleeding them into the reduction process for ultimate treatment and removal. Some mills mix spent plating solutions with spent pickle liquors in storage tanks, where the ferrous sulfate reduces the Cr^{+6} to Cr^{+3} prior to the disposal of the pickle liquor.

The ultimate goal of all systems is to remove or recover the chrome while generating a minimum amount of sludge requiring disposal on landfills. In one case, the Cr^{+6} is reduced to Cr^{+3} and the waste mixed with other mill wastewaters prior to a terminal treatment plant where the final pH of the total plant waste is adjusted to pH 7.1. Under these conditions, the Cr^{+3} passes through the treatment plant without complete removal, as a pH of 8.5-9 is required to quantitatively precipitate the Cr^{+3}. Dilution by other mill wastewater reduces the Cr^{+3} concentration to acceptable levels for discharge.

Copper, Lead, Nickel, Aluminum

Copper, lead, nickel, and aluminum are not major constituents of wastewaters generated during the manufacture of basic steel shapes and forms. They can, however, appear in small concentrations depending upon the process used during that particular step in the steelmaking operation.

These elements, however, are used in the manufacture of alloy steels as well as in cladded and specially coated steel products. Nickel is added to the steel to improve resistance to corrosion. Copper and aluminum sheets can be cladded to steel sheets to take advantage of the properties of copper and aluminum while adding the strength and rigidity of steel. Copper, aluminum, and lead are also applied as coatings on steel via hot dip, cold coating, and electroplating operations. It is in the application of these coatings that the wastewaters containing these elements are most likely to be generated.

The most likely sources of these pollutants are the cleaning and pickling of the steel prior to rolling, drawing or applying of coatings, the rinsing or quenching of the steel after the coatings have been applied, and in the disposal of spent coating solutions. They can be found in the spent pickle liquors and in the rinse water following the pickling and coating operations. The wastewaters are, therefore, generally acid in nature, and the initial water treatment is focused on the neutralization of the acid.

The basic criteria for the neutralization of spent pickle liquors is to neutralize the acid and to precipitate the dissolved iron. In order to precipitate the iron, hydrated lime is used to raise the pH of the waste to 8.5-9.0. At this pH, dissolved iron can be reduced in the wastewater to less than 1.0 ppm. In addition, other metal hydroxides are also precipitated, in many cases to levels below 0.5 ppm. These metal hydroxides include those of copper, lead, nickel, and aluminum. As a result no special emphasis is placed on the removal of copper, lead, nickel, and aluminum from steel mill wastewater because they are generally present in acid solutions and readily precipitated whenever these acid wastes are neutralized with lime.

Ferrous Iron

Ferrous iron is generally present in wastewater generated while forming steel into usable shapes and sizes. During hot rolling, mill scale forms on the surface of the steel and must be periodically removed before further processing the steel. Hydraulic sprays are used to remove heavy scale; however, as the steel assumes the final shape and cools, thinner scale is formed which is more difficult to remove. As a result, the steel must undergo a "pickling" process, that is, the scale is removed by immersing the steel in a bath of acid.

Sulfuric acid is the most common acid used. During pickling, the scale removed from the steel is dissolved in the acid in the form of ferrous sulfate. When the ferrous sulfate concentration in the pickling acid reaches 18-20%, the pickling acid is no longer usable and must be discharged and replaced with new acid. Three methods are used to dispose of this spent pickle liquor which contains 1-3% acid as well as 18-20% ferrous sulfate. These are deep well disposal, neutralization, and crystallization to recover ferrous sulfate and reusable acid.

Deep well disposal has proven successful, but not all mills can utilize this system. Some pickling operations recover a

portion of their acid via crystallization, but the resulting ferrous sulfate may create a disposal problem.

Neutralization is currently the most widely used method for disposing of not only the concentrated spent pickle liquors, but also the dilute acid rinse waters resulting from the pickling operation. Various forms of lime and limestone are used to neutralize this spent acid. This is usually done in a rapid mixing tank where the pH of the spent acid is adjusted to 8.5 with lime. The treated waste is then pumped to a settling basin or lagoon where the precipitated iron in the hydroxide form settles out along with the associated calcium sulfate precipitate. In a properly designed and operated treatment plant, the dissolved iron in the discharge from the settling lagoon should be less than 1 ppm. The resultant sludge in the lagcon must eventually be removed and buried on a landfill.

Oil and Grease

Oily waste discharges from steel mills can be classified into four categories:

1. Free oils, which usually are a mixture of gear oil, bearing oil, hydraulic leakage, some coating oil, and demulsified rolling oil.

2. Oil-coated solids, which consist of small particles of metal or oxide coated with an oil film.

3. Water/oil emulsions in which water is the discontinuous phase. The emulsions themselves are generally unstable and are relatively easily broken with heat or simple chemical treatment, such as pH adjustment.

4. Oil/water emulsions (soluble oils) in which oil is the discontinuous phase. These materials are stable dispersions and show no tendency to separate without treatment.

Two basic types of emulsifiers are available for the formulation of oil/water emulsions and can be utilized either singly or in conjunction with each other. These are anionic types that are relatively easily broken with chemical treatment, and nonionic types which usually require special emulsion breaking chemicals and techniques. Treatment processes utilizing these specialized demulsifiers are usually restricted to batch treatment of concentrated oil wastes because of the high treatment costs.

Two sources of oil by type (solubles/non-solubles) are present in steel production: hot rolling and cold rolling.

An average analyses of cold mill waste streams would present the following compositions:

1. Free oil, water/oil emulsions, and oil coated solids which are subject to flotation, will contain approximately 50% oil and 8% water.

2. The oil/water emulsion will contain approximately 1-5% oil and 0.1% solids.

Hot rolling operations would generally contribute only free oil, water/oil emulsions, and oil coated solids, which are subject to gravity separation.

These waste stream analyses could only be classified as typical for the industry as a whole. Numerous plants may utilize specialized synthetic lubricants such as hot rolling emulsions, etc., which are not in wide usage and constitute a specialized treatment problem for a particular plant or plant area.

In general, it can be seen that the treatment of oily wastes is a specific problem for each manufacturing area or mill and will be subject to change with variations in oil formulations, the state of repair of the equipment, and the type of product to be produced.

The removal of oil from a waste stream can be effected by the following techniques used either singly or in combination with each other, depending on the nature of the waste stream:

Gravity Separations. With the exception of filter techniques, all oil removal processes are based on density separation. The process is applicable to the removal of both floatable substances (i.e., free oil and greases, fine oil coated solids, water/oil emulsions), and heavier-than-water materials, such as the larger oil coated metal and oxide particles. The choice of a particular type of separator would be determined by the type of waste stream encountered, and could range from the simple API separator in which only floatable substances are removed to the more complex dual function scale pits and clarifiers (with or without chemical treatment) in which both the floatable and heavier than water phases are removed.

High Rate Filtration. In general, high rate filtration employing little or no chemical pretreatment is applicable for the removal of all forms of oil (free oil, grease, oil/water, and water/oil) and oil coated suspended solids from a wastewater stream. While the removal efficiency of these devices will vary with the nature of the waste (type of oil, suspended solids, etc.), variations in concentrations within limits will cause little effect. Filters, because of their limited waste holding capacity, should always be preceded by a gross waste removal stage, such as primary and secondary scale pits, API separators, clarifiers, etc., in which chemical treatment may or may not be utilized.

The specific method of handling the filter backwash sludges will again depend on the nature of the waste. Common treatment methods include chemical or elevated temperature oil emulsion breaking with gravity separation, filter cake generation, and admixture with other sludge producing processes for further disposal.

While conventional high rate filters do an admirable job of removing oil, they are subject to oil fouling of the filter media, and hence may have to be routinely cleaned with steam at the termination of the backwash cycle. A new generation of filters has been designed using a radial configuration (nonuniform gradient), synthetic (plastic) media, and an external regeneration or cleaning cycle. These units require only one-fourth the filter depth of conventional high rate filters, and have been shown to be immune to oil fouling.

Flocculation. Flocculation, as a process, is suitable for the removal of emulsified oils (oil/water) and suspended or dispersed solids and oils from a process water stream. It is not suitable for the removal of floating oils and must be utilized in conjunction with a surface oil skimmer either preceding, integral with or following the flocculation/ clarification step.

The process is based on a combination of charge neutralization/ agglomeration and the generation of a metal hydroxide floc on which the oil wastes can be adsorbed.

The flocculating chemicals (iron or alum) and adjunctant chemicals are added in a specific order depending on the ultimate use of the system. High rate mixing at the point of entry followed by a period of slow agitation is required for both optimum oil adsorption and the complete removal of floc from the waste stream.

Since the process is based on gravity separation, sufficient chemicals (metal hydroxides, wetting agents, etc.) must be added to rapidly and completely sink the oil-containing floc to the bottom of the clarifier and retain it there until removal.

These metal hydoxide flocs and their combination with oil produce a very difficult sludge which usually resists disposition treatment of any kind. For this reason, flocculation is seldom utilized in process streams containing heavy concentrations of oil.

Air Flotation. In the air flotation process, separable wastes are removed from a process stream by the attachment of microscopic air bubbles to the impurity and allowing the resultant lighter than water mass to gravity separate under quiescent conditions. In some cases where the waste will not accept direct air attachment, chemical flocs and/or chemical aids are added to adsorb the waste and/or modify its surface charge for proper air attachment.

Two basic types of flotators are available: mechanical and dissolved air. In the mechanical design, air is mechanically entrained in the waste stream prior to the separation chamber usually via high shear mixers. In the dissolved air flotation system, elevated pressures are utilized to dissolve excess air in all or a portion of the waste stream. This dissolved air is then allowed to release in the form of microscopic bubbles on pressure letdown at the inlet to the separation chamber.

The process in general, because of the critical amounts of air required and the difficulty in its generation, is limited to relatively low flow rates and stead state concentration conditions for optimum operation. For this reason, this process is usually preceded by both accumulation and equalization facilities.

The advantages in this form of treatment over conventional clarification are twofold. First, the basic oil containing sludge being separated has a low inherent density, and is in itself amenable to gravity separation and surface removal and, second, the amount of added flocculants required for oil/water emulsion removal are minimal, hence producing a low volume sludge that is optimum for oil recovery.

Phosphate

Phosphates are used in the steel industry as pretreatment for strip steel prior to applying various inorganic and

organic coatings. Rinsing of the sheet following these treatments generates a phosphate-bearing wastewater requiring treatment prior to disposal.

Ortho, trisodium, and pyrophosphates as well as other proprietary compounds containing phosphates are also used as alkaline cleaners for the removal of oil and dirt from the steel strip. Phosphoric acid is used in some pickling lines including electrolytic pickling. These operations prepare the strip for further treatment. The alkaline cleaner and pickling acid used will vary depending on the type of coating to be applied to the strip.

Proprietary phosphate treatment compounds are used to treat zinc coated strip or plate to provide a better bonding surface for lacquers and paints. This treatment is generally followed by a chromate rinse to protect the sheet against oxidation until it can be coated. Coslettizing, Parkerizing, and Bonderizing are processes that utilize phosphates to prepare surfaces for painting.

Several systems may be used to precipitate and remove phosphates from wastewaters. Alum at pH of 5.5-5.6 will precipitate phosphates. Ferrous sulfate, ferric sulfate, ferric chloride, and pickle liquor will precipitate phosphates at a pH of 4.5-5.0. Lime will precipitate phosphates at pH of 9. None of these systems completely remove the phosphates; however, in combination they can lower the phosphates concentration in the wastewater to an acceptable level.

Wastewater treatment systems in steel mills are not primarily designed for the removal of phosphates. The neutralization of pickle liquors with lime and the use of alum as a flocculating agent to meet effluent standards already incorporate these methods for phosphate removal so that no special treatment systems are required to remove phosphates. In the lime treatment of wastewaters, the operating pH may be predicated on the ability to obtain good suspended solids removal rather than on phosphorous removal.

In a properly designed wastewater treatment system where pickle liquor is neutralized with lime either prior to or after oil removal the phosphate level should be well within the effluent standards.

Sulfate

Sulfate as a waste product in the steel industry can be attributable to numerous processes among which the coking

and blast furnace operations of the basic iron industry and the pickling or cleaning of steel products could be considered to be prime contributors.

The concentrations and volumes of these sources are varied, and are dependent on the particular processes utilized.

In general, low concentrations of sulfate cannot be considered to be detrimental. High concentrations, however, may be detrimental and may lead to particulate pollution through its subsequent precipitation with calcium in a receiving body.

The specific removal of sulfate from a wastewater is seldom justified because of its innocuous nature. When the treatment of sulfate based wastes are undertaken, it is usually for the removal of other detrimental ions contained in the sample. Any reduction in sulfate gained under these circumstances is thus secondary in nature.

Treatment processes applicable for the removal or reduction in concentration of sulfate fall into two types--those that reduce the total dissolved solids content of the waste stream such as evaporation and crystallization, and those that maintain or add to the total dissolved solids such as dilution, ion exchange, and chemical precipitation.

The method selected for the removal of sulfate is dictated not only by its concentration, the volume of the waste stream, and its ultimate use such as disposal or reuse, but on the other ions contained with it in the waste.

Evaporation, crystallization, and precipitation techniques are primarily intended for high dissolved solids conditions such as pickle liquors (ferrous sulfate), recycled contact cooling liquors, and scrubbing liquors (ammonium sulfate).

Ion exchange, when usable, is primarily applicable to low concentration conditions.

In-plant dilution, which often makes use of the plant's central waste treatment facility, is the most widely used method of treatment. If during dilution, precipitation does occur, it is subsequently removed before being discharged into the receiving body.

Sulfide

Sulfide wastes in the iron and steel industry are derived from two principal sources: (1) high temperature gaseous and

solids (slag) production encompassing both the coking and blast furnace operations in the basic iron industry, and the fossil fueled cupolas employed in the iron foundry industry, and (2) low temperature ionic production from the pickling or cleaning of steel with sulfuric acid. In both cases the sulfide ion ($S^=$) is derived from sulfur or sulfur containing compounds via chemical reduction.

The sulfide ion and its associated ionic compounds have the following chemical characteristics which can be utilized to both limit its production rate or enhance its removal from a waste stream.

1. Its decreasing solubility with increasing hydrogen ion content (low pH).

2. Its high reactivity as a reductant, especially at low pH values.

3. Its reactivity with heavy metals to form insoluble precipitates.

4. Its biological degradability.

The removal of sulfides from a waste stream can be accomplished either as a separate treatment process or combined with other waste materials. Some of these treatment methods are as follows:

Aeration. This process is primarily applicable to wastes containing high sulfide concentrations. In principal, the sulfide compound in the waste stream is subjected to aeration in which both air stripping and insitu oxidation of the sulfide occurs. Both the stripping and oxidation rates are a function of pH with maximum rates being obtained at low pH values. The high rates of aeration required can be obtained via stripping towers, spray towers, lagoon aeration, etc.

Chemical Oxidation. Oxidants such as chlorine, ozone, etc., are effective with sulfides but will have limited application in high volume or high concentration situations because of excessive treatment costs.

Biological Oxidation. This form of treatment would be primarily applicable to the removal of sulfides when they are combined with other more difficult wastes such as phenols, etc., as found in the coke producing processes.

Dilution with Other Process Waters. This process is essentially that of oxidation (biological and chemical) and is probably the easiest and most effective treatment method for sulfides in low concentrations. The success of this treatment is dependent on the presence of sufficient dissolved oxygen in the other process stream to perform the required oxidation. The presence of other competing reducing agents (oxygen consuming substances) such as ferrous iron should be minimal unless additional aeration is considered.

Suspended Solids

Suspended solids in the steel industry for the most part fall into the following categories:

1. Metal Oxides
2. Metal Hydroxides

Iron oxides comprise the major source of suspended solids in the steel industry. They are indigenous to the blast furnace production of iron, all three steelmaking operations, and the hot steel rolling operations. The treatment of the blast furnace suspended solids have been and will continue to be treated via gravity separation in what are referred to as thickeners. These devices are large circular clarifier type structures incorporating continuous underflow draw-off. The disposition of the underflow sludge is ultimately back to the blast furnace.

The removal of suspended solids from the hot rolling operations on the other hand is performed by a diverse group of methods all of which are based on a sequential treatment scheme.

The selection of the optimum treatment system is a highly complex one based on the following criteria:

1. Flow
2. Particle size distribution
3. Suspended solids loading
4. Available space
5. Initial and operating costs

Wastes from hot rolling operations are highly variable in composition. Blooms, billets, slabs, and plate produce a large volume of very coarse scale which in most cases is amendable to treatment utilizing a primary scale pit followed by clarification with chemical flocculation.

The production of hot rolled strip, sheet, and shapes, however, produces a wide latitude of particle sizes all of which are not only unique to the particular rolling mill configuration but to the types or analysis of the steel being rolled and the temperature employed in its rolling. Scale pit removal rates are in turn dependent on detention time which is influenced both by the waste flow rates and the pit sludge volume. Filter removal efficiency is in turn dependent on flow, particle size, and the degree of exhaustion of the filter.

For this reason, no removal efficiency can be assigned to any particular stage of the treatment process, but that the process has to be designed and judged as a whole.

Red iron oxides are indigenous to numerous production operations such as open hearth furnaces, basic oxygen furnaces, electric furnaces, scarfing operations, sinter plants, etc. While this waste was initially considered an air pollution problem, its transfer to the waste stream via wet air pollution scrubbers and contact cooling waters has necessitated its removal in every increasing quantities.

As a waste it is usually treated via gravity separation techniques. For the most part its treatment has been confined to thickeners which, when treated with optimum organic flocculant aids, have provided good separations.

Metal hydroxide in an integrated steel mill can be derived from two sources: (1) as an added material (flocculant) to aid in the removal of other soluble or particulate wastes; or (2) as a soluble metal waste to be removed via precipitation techniques. In the addition of metal ions for the control of dissolved and suspended solids, either ferric sulfate or aluminum sulfate is added to the waste stream and the pH adjusted to approximately 5-8.

The sorbtive and agglomerative flocs generated are utilized to remove such material as insoluble and soluble oils by sorbtion, and hard to settle submicron sized suspended solids by charge neutralization and agglomeration (flocculation).

The separation of this floc and its entrained wastes from the waste stream can be accomplished by the following common means:

1. Clarifiers
2. Settling lagoons
3. Air flotators

4. Deep bed filters

The selection of the removal technique will be strongly influenced by the nature of the influent waste, its concentration, the amount of flocculant required, the stream volume, available space, and economics.

Generally, large conditioned flocs (rapid settling) are best handled via clarifiers and settling lagoons. Suspended solids that resist optimum floc conditioning (chemically or economically) are best handled by high rate deep bed filters. The filter backwash (cleaning) water can in turn be run into a lagoon or tank for disposition via vacuum filtration, settling and dredging, coagulation or admixture with other wastes for disposition.

The processing of gelatinous flocculants containing large amounts of oil is best done via air flotation. The disposition of the separated sludge because of its gelatinous nature can best be accomplished via heat decomposition, chemical decomposition or admixture with other diluent solid wastes, etc.

The precipitation of metal hydroxides from plant streams with calcium hydroxide, sodium hydroxide, etc., has been applied to a diverse group of metals from the steel pickling and plating operations. Precipitable metals include Fe, Cr, Sn, and Zn.

The neutralization of dissolved iron from concentrated pickle liquor in a mill is relatively uncommon because of the gross sludge wastes generated and the difficulty of its disposal. Through proper plant design operation, however, acid rinse water and some concentration of pickle liquor can be utilized in the waste and water treatment facilities for their flocculating capabilities.

The precipitation of chrome unlike the other waste metals is a two-step operation in which the hexavalent chrome ion is first chemically reduced (usually using ferrous iron from pickle liquor) to its trivalent state before precipitation as its hydroxide can occur. Its subsequent precipitation with hydroxide produces a mixed sludge of ferric and chromic hydroxide, which is gravity separated from the waste stream. Because of the high ratio of hydroxides to other bulk solids, the waste has a gelatinous characteristic which makes its separation from the waste stream and dewatering difficult. Disposition of the sludge is usually via lagoons for dewatering or admixtured with other sludges to improve its dewatering characteristics.

The removal of tin from a waste stream as its hydroxide is a straight precipitation reaction using any hydroxide source. In the case of the hydrogen plating process the use of calcium hydroxide will result in a mixed precipitation of tin hydroxide and calcium fluoride (CaF_2). Unlike straight metal hydroxide sludges, this mixed product settles rapidly and is easily separable from the waste stream. In many cases, the waste solids are reprocessed by an outside firm for reuse.

Zinc wastes from electrolytic plating and galvanizing operations are precipitable via pH adjustment to form zinc hydroxide. Zinc, unlike most metals is amphoteric (soluble at both high and low pH) and hence relatively close pH control is required for optimum conversion to the hydroxide. Separation is usually via clarification (gravity separation).

Zinc

Two processes for the application of a zinc coating to a steel surface are currently utilized by the steel industry; hot dipped coatings and electrolytic coatings.

The hot dip process has no apparent zinc wastes of any kind if good housekeeping procedures are maintained. The only possible source of zinc from this process would be in the form of an insoluble metal oxide dross routinely skimmed from the surface of the molten zinc bath. The other wastes from this process, consisting of alkaline cleaning solutions, acid pickling wastes, and oils should not contain zinc in any form since they precede the zinc coating operation.

The discharge of zinc from the electrolytic process, however, is a problem. The magnitude and treatment of which is a function of the type of plating bath utilized and its inherent dragout rate. Two main types of electrolytic baths are utilized, acid and alkaline, with each specific for a particular type of plating operation. Acid type baths with their high deposition rate and poor throwing characteristics are utilized predominately for the production of steel strip.

Alkaline cyanide baths with their lower deposition rates and higher throwing capabilities are used predominately for the production of shapes such as conduit.

The amount of electrolytes entering a waste system will be a function of the type of plating operation. Specific figures

for the amount of dragout on electrolyte lost to the waste system from continuous strip operation are subject to wide variation. Parameters such as the width of the strip, its line speed, the method of electrolytic removal from the strip, the surface tension of the electrolyte, etc., will all affect the dragout rate. From this it can be seen that plating waste loadings will be typical only to that particular operation. The dragout rates encountered with batch type operations can show wide variations because of their manual or semi-automatic operation.

The batch dumping of defective or spent electrolyte is relatively common and can be handled in two ways, a holding tank having a metered discharge into an existing waste processing system, or the use of a small batch treatment plant.

Treatment methods for the removal of zinc from a waste process stream will depend on the type of electrolyte used. The treatment of a zinc acid electrolytic waste is a simple one-step operation calling for the elevation of the waste pH value to approximately 8.0 with the precipitation of the zinc as its hydroxide. The range of pH adjustment is critical as zinc is amphoteric. To all intents, the discharge of either the acid sulfate or the acid chloride electrolytic based wastes into an existing buffered waste stream would result in the precipitation of the hydroxide. This treatment would be acceptable, providing subsequent treatment facilities were available for the removal of the developed suspended solids. The fluoborate electrolyte should be treated only with lime in a separate plant (batch or continuous) to effect the precipitations of both the zinc and toxic fluoride.

Reference Level of Treatment

In developing the technology, guidelines, and incremental costs associated with the application of the technologies subsequently to be selected and designated as one approach to the treatment of effluents to achieve the BPCTCA, BATEA, and NSPS effluent qualities, it was necessary to determine what reference or minimum level of treatment was already in existence for practically all plants within the industry in any given subcategory. The different technology levels were then formulated in an "add-on" fashion to these reference levels in so far as possible. The various treatment models (levels of treatment) and corresponding effluent volumes and characteristics are listed in Tables 63 through 76. Since these tables also list the corresponding costs for the average size plant they are presented in Section VIII.

It was obvious from the plant visits that many of the plants in existence today have treatment and control facilities with capabilities that far exceed the technologies chosen to be the reference levels of treatment. Even though many plants may be superior to the base technology, it was necessary, in order to consider the industry as a whole, to start at the reference level of technology in the development of treatment models and incremental costs.

SECTION VIII

COST, ENERGY, AND NON-WATER QUALITY ASPECTS

INTRODUCTION

This section will discuss the incremental costs incurred in applying the different levels of pollution control technology. The analysis will also describe energy requirements, nonwater quality aspects (including sludge disposal, by-product recovery, etc.), and their techniques, magnitude, and costs for each level of technology.

It must be remembered that some of the technology beyond the reference level is already in use. Also many possible combinations or permutations of various treatment methods are possible. Thus, not all plants will be required to add all of the treatment capabilities, or incur all of the incremental costs indicated to bring the reference level facilities into compliance with the effluent limitations.

Costs

The water pollution control costs for the plants visited during the study are presented in Tables 49 through 60. The treatment systems, gross effluent loads, and reduction benefits were described in Section VII. The costs were estimated from data supplied by the plants. The results are summarized as follows:

Process	Plant	Cost per unit weight of product (1)		
		$/kkg	$/ton	Product
A. Hot Forming	A-2	0.203	0.184	
	B-2	0.286	0.26	
	C-2	0.482	0.437	
	D-2	0.445	0.404	
	E-2	0.644	0.584	
	F-2	1.69	1.53	Hot
	G-2	0.730	0.662	Rolled
	H-2	0.161	0.146	Product
	I-2	1.81	1.64	
	J-2	0.809	0.734	
	K-2	1.19	1.08	
	L-2	(NA)	(NA)	
	M-2	0.604	0.548	
	N-2	0.925	0.839	

B. Pipe and Tubes	E-2	0.927	0.841	
	GG-2	(NA)	(NA)	Pipe
	HH-2	(NA)	(NA)	and
	II-2	0.378	0.343	Tubes
	JJ-2	0.397	0.360	
	KK-2	0.093	0.084	
C. Pickling-Sulfuric Acid-Batch Conc.	I-2	1.80	1.63	
	O-2	0.353	0.320	Pickled
	P-2	1.98	1.80	Product
	Q-2	0.319	0.289	
	R-2	0.373	0.338	
Batch Rinse	I-2	0.122	0.0111	
	I-2	0.115	0.104	
	P-2	(NA)	(NA)	Pickled
	Q-2	(NA)	(NA)	Product
	R-2	0.0507	0.046	
	S-2	0.679	0.616	
Continuous	T-2	0.777	0.705	Pickled Product
D. Pickling-Hydrochloric Acid-Batch Conc.	U-2	0.427	0.387	Pickled
	V-2	0.0709	0.0643	Product
Batch Rinse	U-2	1.98	1.80	Pickled
	V-2	0.0342	0.0311	Product
Continuous Conc.	I-2	(NA)	(NA)	
	W-2	(NA)	(NA)	
	X-2	(-0.662)	(-0.600)	Pickled
	Y-2	(NA)	(NA)	Product
	Z-2	1.28	1.16	
	AA-2	(NA)	(NA)	
	BB-2	0.105	0.0953	
Continuous Rinse	I-2	0.354	0.321	
	W-2	(NA)	(NA)	
	X-2	(NA)	(NA)	Pickled
	Y-2	(NA)	(NA)	Product
	Z-2	0.0673	0.0610	
	AA-2	0.136	0.123	
	BB-2	0.400	0.363	

E. Cold Rolling	X-2	0.798	0.724	
	BB-2	0.169	0.153	Cold
	DD-2	0.645	0.585	Rolled
	EE-2	0.258	0.234	Product
	FF-2	0.389	0.353	
F. Hot Coatings-Galvanizing	I-2	0.368	0.334	
	MM-2	0.908	0.824	Coated
	NN-2	0.498	0.452	Product
G. Hot Coatings-Terne Plate	OO-2	(NA)	(NA)	Coated
	PP-2	(NA)	(NA)	Product

NOTE:
(1) NA means not available from company supplied data.
(2) Appearance of a negative cost indicates a profitable operation.

FULL RANGE OF TECHNOLOGY IN USE OR AVAILABLE TO THE STEEL INDUSTRY

The full range of technology in use or available to the steel industry today is presented in Tables 63 to 76. In addition to presenting the range of treatment methods available, these tables also describe for each method:

1. Resulting effluent levels for critical constituents
2. Status and reliability
3. Problems and limitations
4. Implementation time
5. Land requirements
6. Environmental impacts other than water
7. Solid waste generation

BASIS OF COST ESTIMATES

Costs associated with the full range of treatment technology including investment, capital depreciation, operating and maintenance, and energy and power are presented on water effluent cost tables corresponding to the appropriate category technology Tables 63 to 76.

Costs were developed as follows:

1. National annual production rate data was collected and tabulated along with the number of plants in each

subcategory. From this, an "average" size plant was established.

2. Flow rates were established based on the data accumulated during the survey portion of this study and from knowledge of what flow reductions could be obtained with minor modifications. The flow is here expressed in l/kkg or gal./ton of product.

3. Then a treatment process model and flow diagram was developed for each subcategory. This model was based on knowledge of the manner in which most plants in a given subcategory handle their wastes, and on the flow rates established by 1 and 2 above.

4. Finally, a quasi-detailed cost estimate was made on the developed flow diagram.

Total annual costs in August, 1971 dollars were calculated on total operating costs (including all chemicals, maintenance, labor, energy, and power) and the capital recovery costs. Capital recovery costs were then subdivided into straightline ten-year depreciation and the cost of capital at a 7% annual interest rate for ten years.

The capital recovery factor (CRF) is normally used in industry to help allocate the initial investment and the interest to the total operating cost of a facility. The CRF is equal to i plus i divided by a -1, where a is equal to (1 + i) to the power n. The CRF is multiplied by the initial investment to obtain the annual capital recovery. That is: (CRF) (P) = ACR. The annual depreciation is found by dividing the initial investment by the depreciation period (n = 10 years). That is: P/10 = annual depreciation. Then the annual cost of capital has been assumed to be the total annual capital recovery minus the annual depreciation. That is: ACR - P/10 = annual cost of capital.

Construction costs are dependent upon many different variable conditions, and in order to determine definitive costs the following parameters are established as the basis of cost estimates. In addition, the cost estimates as developed reflect only average costs.

a. The treatment facilities are contained within a "battery limit" site location and are erected on a "green field" site. Site clearance costs such as existing plant equipment relocation, etc., are not included in cost estimates.

b. Equipment costs are based on specific water flow rates requiring treatment. A change in water flow rates will affect costs.

c. The treatment facilities are located in close proximity to the steelmaking process area. Piping and other utility costs for interconnecting utility runs between the treatment facilities battery limits and process equipment areas are not included in cost estimates.

d. Sales and use taxes or freight charges are not included in cost estimates.

e. Land acquisition costs are not included in cost estimates.

f. Expansion of existing supporting utilities such as sewage, river water pumping stations, increased boiler capacity are not included in cost estimates.

g. Potable water, fire lines, and sewage lines to service treatment facilities are not included in cost estimates.

h. Limited instrumentation has been included for pH control, but no automatic samplers, temperature indicators, flow meters, recorders, etc., are included in cost estimates.

i. The site conditions are based on:

(1) No hardpan or rock excavation, blasting. etc.
(2) No pilings or spread footing foundations for poor soil conditions.
(3) No well pointing.
(4) No dams, channels, or site drainage required.
(5) No cut and fill or grading of site.
(6) No seeding or planting of grasses and only minor site grubbing and small shrubs clearance; no tree removal.

j. Control buildings are prefabricated buildings, not brick or block type.

k. No painting, pipe insulation, and steam or electric heat tracing are included.

l. No special guardrails, buildings, lab test facilities, signs, docks are included.

Other factors that affect costs but cannot be evaluated:

a. Geographic location in United States.
b. Metropolitan or rural areas.
c. Labor rates, local union rules, regulations, and restrictions.
d. Manpower requirements.
e. Type of contract.
f. Weather conditions or season.
g. Transportation of men, materials, and equipment.
h. Building code requirements.
i. Safety requirements.
j. General business conditions.

The cost estimates do reflect an on-site "battery limit" treatment plant with electrical substation and equipment for powering the facilities, all necessary pumps, treatment plant interconnecting feed pipe lines, chemical treatment facilities, foundations, structural steel, and control house. Access roadways within battery limits area are included in estimates based upon 3.8 cm (1.5 in.) thick bituminous wearing course and 10 cm (4 in.) thick sub-base with sealer, binder, and gravel surfacing. A nine gage chain link fence with three strand barb wire and one truck gate was included for fencing in treatment facilities area.

The cost estimates also include a 15% contingency, 10% contractor's overhead and profit, and engineering fees of 15%.

REFERENCE LEVEL AND INTERMEDIATE TECHNOLOGY, ENERGY, AND NON- WATER IMPACT

The reference levels of treatment, the energy requirements, and non-water quality aspects associated with intermediate levels of treatment are discussed below by subcategories.

Hot Forming - Primary

Reference Level of Treatment. Once-through system. Scale pit with oil catching baffles for suspended solids and gross oil removal.

Additional Energy Requirements. To meet EPA 1977 standards for wastewater discharge to public waters, modifications will be required to the wastewater treatment system. The additional power consumed will be 1.95 kwh/kkg (1.77 kwh/ton) processed. For the typical 3,628 kkg/day (4,000 ton/day) facility, the power required will be 295 kw (395 horsepower). The annual cost to operate this equipment will be $29,625.

Non-Water Quality Aspects.

1. Air Pollution: None
2. Solid Waste Disposal: The sludge will be collected and recycled to melting operations.

Hot Forming - Section

Reference Level of Treatment. Once-through system. Scale pit with oil catching baffles for suspended solids and gross oil removal.

Additional Energy Requirements. To meet EPA 1977 standards for wastewater discharge to public waters, modifications will be required to the wastewater treatment system. The additional power consumed will be 8.53 kwh/kkg (7.74 kwh/ton) processed. For the typical 1,179.1 kkg/day (1,300 ton/day) facility, the power required will be 419 kw (562 horsepower). The annual cost to operate this equipment will be $42,150.

Non-Water Quality Aspects.

1. Air Pollution: None
2. Solid Waste Disposal: The sludge will be collected and recycled to melting operations.

Hot Forming - Flat - Plate

Reference Level of Treatment. Once-through system. Scale pit with oil catching baffles for suspended solids and gross oil removal.

Additional Energy Requirements. To meet EPA 1977 standards for wastewater discharge to public waters, modifications will be required to the wastewater treatment system. The additional power consumed will be 5.68 kwh/kkg (5.15 kwh/ton) processed. For the typical 1,814 kkg/day (2,000 ton/day) facility, the power required will be 429 kw (575 horsepower). The annual cost to operate this equipment will be $43,125.

Non-Water Quality Aspects.

1. Air Pollution: None
2. Solid Waste Disposal: The sludge will be collected and recycled to melting operations.

Hot Forming - Flat - Hot Strip and Sheet

Reference Level of Treatment. Once-through system. Scale pit with oil catching baffles for suspended solids and gross oil removal.

Additional Energy Requirements. To meet EPA 1977 standards for wastewater discharge to public waters, modifications will be required to the wastewater treatment system. The additional power consumed will be 10.65 kwh/kkg (9.66 kwh/ton) processed. For the typical 3,447 kkg/day (3,800 ton/day) facility, the power required will be 1,529 kw (2,050 horsepower). The annual cost to operate this equipment will be $153,750.

Non-Water Quality Aspects.

1. Air Pollution: None
2. Solid Waste Disposal: The sludge will be collected and recycled to melting operations.

Pipe and Tubes

Reference Level of Treatment. Once-through - contact and noncontact wastewaters. Scale pit with oil skimmer for removal of heavy solids and oil.

Additional Energy Requirements. To meet the EPA 1977 standards for discharge of wastewater into public waters, modifications will be required to the wastewater treatment system. The additional power consumed will be 13.82 kwh/kkg (12.53 kwh/ton) processed. For the typical 363 kkg/day (400 ton/day) facility, the power required will be 209 kw (280 horsepower). The annual cost to operate this equipment will be $21,000.

Non-Water Quality Aspects.

1. Air Pollution: None
2. Solid Waste Disposal: The sludge will be clamshelled and landfilled, or recycled to melting operations.

Pickling - Batch Sulfuric Acid - Concentrated

Reference Level of Treatment. Contract hauling of spent pickle liquor off-site for disposal or treatment.

Additional Energy Requirements. To meet EPA 1977 standards for wastewater discharge to public waters, modifications will be required to the wastewater treatment system. The additional power consumed will be 0.40 kwh/kkg (0.36 kwh/ton) processed. For the typical 227 kkg/day (250

ton/day) facility, the power required will be 3.7 kw (5 horsepower). The annual cost to operate this equipment will be $375.

Non-Water Quality Aspects.

1. Air Pollution: None
2. Solid Waste Disposal: The sludge will be clamshelled and landfilled.

Pickling - Batch Sulfuric Acid - Rinse

Reference Level of Treatment. Minimize rinse water flow rates. No additional treatment.

Additional Energy Requirements. To meet EPA 1977 standards for wastewater discharge to public waters, modifications will be required to the wastewater treatment system. The additional power consumed will be 1.98 kwh/kkg (1.80 kwh/ton) processed. For the typical 227 kkg/day (250 ton/day) facility, 18.7 kw (25 horsepower). The annual cost to operate this equipment will be $1,875.

Non-Water Quality Aspects.

1. Air Pollution: None
2. Solid Waste Disposal: The sludge will be clamshelled and landfilled.

Pickling - Hydrochloric Acid - Concentrated - Alternate I

Reference Level of Treatment. Deep well disposal, or contract hauling of spent pickle liquor off-site for disposal or treatment.

Additional Energy Requirements. To meet EPA 1977 standards for wastewater discharge to public waters, modifications will be required to the wastewater treatment system. The additional power consumed will be 0.66 kwh/kkg (0.60 kwh/ton) processed. For the typical 2,721 kkg/day (3,000 ton/day) facility, the power required will be 74.6 kw (100 horsepower). The annual cost to operate this equipment will be $7,500.

Non-Water Quality Aspects.

1. Air Pollution: None
2. Solid Waste Disposal: The sludge will be clamshelled and landfilled.

Pickling - Hydrochloric Acid - Rinse - Alternate I

Reference Level of Treatment. Equalization and neutralization of free acidity before direct discharge to receiving stream.

Additional Energy Requirements. To meet EPA 1977 standards for wastewater discharge to public waters, modifications will be required to the wastewater treatment system. The additional power consumed will be 1.31 kwh/kkg (1.19 kwh/ton) processed. For the typical 2,721 kkg/day (3,000 ton/day) facility, the power required will be 149 kw (200 horsepower). The annual cost to operate this equipment will be $15,000.

Non-Water Quality Aspects.

1. Air Pollution: None
2. Solid Waste Disposal: The sludge will be clamshelled and landfilled.

Alternate II

Reference Level of Treatment. Deep well disposal, or contract hauling of spent pickle liquor off-site for disposal or treatment; neutralization of free acidity before direct discharge to receiving stream.

Additional Energy Requirements. To meet EPA 1977 standards for wastewater discharge to public waters, modifications will be required to the wastewater treatment system. The additional power consumed will be 1.45 kwh/kkg (1.32 kwh/ton) processed. For the typical 2.721 kkg/day (3,000 ton/day) facility, the power required will be 164 kw (220 horsepower). The annual cost to operate this equipment will be $16,500.

Non-Water Quality Aspects.

1. Air Pollution: None
2. Solid Waste Disposal: The sludge will be clamshelled and landfilled.

Cold Rolling - Recirculation

Reference Level of Treatment. Recirculation of rolling solutions on all rolling stands. Oil skimmer in recycle sump. Blending of rolling solution blowdown and miscellaneous (tramp oils) wastewaters. Treatment of mixture with oil separator/settler.

Additional Energy Requirements. To meet EPA 1977 standards for wastewater discharge to public waters, modifications will be required to the wastewater treatment system. The additional power consumed will be 0.86 kwh/kkg (0.78 kwh/ton) processed. For the typical 2,721 kkg/day (3,000 ton/day) facility, the power required will be 97 kw (130 horsepower). The annual cost to operate this equipment will be $9,750.

Non-Water Quality Aspects.

1. Air Pollution: None
2. Solid Waste Disposal: The sludge will be clamshelled and landfilled.

Cold Rolling - Combination

Reference Level of Treatment. Recirculation of rolling solutions on as many stands as possible, with remaining stands oncethrough. Oil skimmer in recycle sump. Blending of rolling solution blowdown and miscellaneous (tramp oils) wastewaters. Treatment of mixture with oil separator/settler.

Additional Energy Requirements. To meet EPA 1977 standards for wastewater discharge to public waters, modifications will be required to the wastewater treatment system. The additional power consumed will be 10.53 kwh/kkg (9.55 kwh/ton) processed. For the typical 1,360.5 kkg/day (1,500 ton/day) facility, the power required will be 597 kw (800 horsepower). The annual cost to operate this equipment will be $60,000.

Non-Water Quality Aspects.

1. Air Pollution: None
2. Solid Waste Disposal: The sludge will be clamshelled and landfilled.

Cold Rolling - Direct Application

Reference Level of Treatment. All stands use rolling solutions once-through. Oil skimmer in recycle sump. Blending of rolling solution blowdown and miscellaneous (tramp oils) wastewaters. Treatment of mixture with oil separator/settler.

Additional Energy Requirements. To meet EPA 1977 standards for wastewater discharge to public waters, modifications will be required to the wastewater treatment system. The

additional power consumed will be 15.79 kwh/kkg (14.32 kwh/ton) processed. For the typical 907 kkg/day (1,000 ton/day) facility, the power required will be 597 kw (800 horsepower). The annual cost to operate this equipment will be $60,000.

Non-Water Quality Aspects.

1. Air Pollution: None
2. Solid Waste Disposal: The sludge will be clamshelled and landfilled.

Hot Coatings - Galvanizing and Terne Plating

Reference Level of Treatment. No treatment of effluent. Tight control of dragout in process.

Additional Energy Requirements. To meet EPA 1977 standards for wastewater discharge to public waters, modifications will be required to the wastewater treatment system. The additional power consumed will be 1.47 kwh/kkg (1.33 kwh/ton) processed. For the typical 635 kkg/day (700 ton/day) facility, the power required will be 38.8 kw (52 horsepower). The annual cost to operate this equipment will be $3,900.

Non-Water Quality Aspects.

1. Air Pollution: None
2. Solid Waste Disposal: The sludge will be clamshelled and landfilled.

ADVANCED TECHNOLOGY, ENERGY, AND NON-WATER IMPACT

The energy requirements and non-water quality aspects associated with the advanced treatment technology for each subcategory are discussed below.

Hot Forming - Primary

Additional Energy Requirements. To meet EPA 1983 standards for wastewater discharge to public waters, modifications will be required to the wastewater treatment system. The additional power consumed will be 1.875 kwh/kkg (1.701 kwh/ton) processed. For the typical 3,628 kkg/day (4,000 ton/day) facility, the power required will be 283.5 kw (380 horsepower). The annual cost to operate this equipment will be $28,500.

Non-Water Quality Aspects.

1. Air Pollution: None
2. Solid Waste Disposal: The sludge will be collected and recycled to melting operations.

Hot Forming - Section

Additional Energy Requirements. To meet EPA 1983 standards for wastewater discharge to public waters, modifications will be required to the wastewater treatment system. The additional power consumed will be 10.63 kwh/kkg (9.64 kwh/ton) processed. For the typical 11.79.1 kkg/day (1,300 ton/day) facility, the power required will be 522 kw (700 horsepower). The annual cost to operate this equipment will be $52,500.

Non-Water Quality Aspects.

1. Air Pollution: None
2. Solid Waste Disposal: The sludge will be collected and recycled to melting operations.

Hot Forming - Flat - Plate

Additional Energy Requirements. To meet EPA 1983 standards for wastewater discharge to public waters, modifications will be required to the wastewater treatment system. The additional power consumed will be 9.080 kwh/kkg (8.24 kwh/ton) processed. For the typical 1,814 kkg/day (2,000 ton/day) facility, the power required will be 686.32 kw (920 horsepower). The annual cost to operate this equipment will be $69,000.

Non-Water Quality Aspects.

1. Air Pollution: None
2. Solid Waste Disposal: The sludge will be collected and recycled to melting operations.

Hot Forming - Flat - Hot Strip and Sheet

Additional Energy Requirements. To meet EPA 1983 standards for wastewater discharge to public waters, modifications will be required to the wastewater treatment system. The additional power consumed will be 10.39 kwh/kkg (9.42 kwh/ton) processed. For the typical 3,447 kkg/day (3,800 ton/day) facility, the power required will be 1,492 kw (2,000 horsepower). The annual cost to operate this equipment will be $150,000.

Non-Water Quality Aspects.

1. Air Pollution: None
2. Solid Waste Disposal: The sludge will be collected and recycled to melting operations.

Pipe and Tubes

Additional Energy Requirements. To meet EPA 1983 standards for wastewater discharge to public waters, modifications will be required to the wastewater treatment system. The additional power consumed will be 12.34 kwh/kkg (11.19 kwh/ton) processed. For the typical 363 kkg/day (400 ton/day) facility, the power required will be 186.5 kw (250 horsepower). The annual cost to operate this equipment will be $18,750.

Non-Water Quality Aspects.

1. Air Pollution: None
2. Solid Waste Disposal: The sludge will be clamshelled and landfilled, or recycled to melting operations.

Pickling - Batch Sulfuric Acid - Concentrated

Additional Energy Requirements. To meet EPA 1983 standards for wastewater discharge to public waters, modifications will be required to the wastewater treatment system. The additional power consumed will be 33.33 kwh/kkg (30.23 kwh/ton) processed. For the typical 227 kkg/day (250 ton/day) facility, the power required will be 315 kw (422 horsepower). The annual cost to operate this equipment will be $31,666.

Non-Water Quality Aspects.

1. Air Pollution: None
2. Solid Waste Disposal: The sludge will be clamshelled and landfilled.

Pickling - Batch Sulfuric Acid - Rinse

Additional Energy Requirements. To meet EPA 1983 standards for wastewater discharge to public waters, modifications will be required to the wastewater treatment system. The additional power consumed will be 2.90 kwh/kkg (2.63 kwh/ton) processed. For the typical 227 kkg/day (250 ton/day) facility, the power required will be 27.4 kw (36.7 horsepower). The annual cost to operate this equipment will be $2,754.

Non-Water Quality Aspects.

1. Air Pollution: None
2. Solid Waste Disposal: The sludge will be clamshelled and landfilled.

Additional Energy Requirements. To meet EPA 1983 standards for wastewater discharge to public waters, modifications will be required to the wastewater treatment system. The additional power consumed will be 0.13 kwh/kkg (0.12 kwh/ton) processed. For the typical 2,721 kkg/day (3,000 ton/day) facility, the power required will be 14.9 kw (20 horsepower). The annual cost to operate this equipment will be $1,500.

Non-Water Quality Aspects.

1. Air Pollution: None
2. Solid Waste Disposal: The sludge will be clamshelled and landfilled.

Pickling - Hydrochloric Acid - Concentrated - Alternate I

Additional Energy Requirements. To meet EPA 1983 standards for wastewater discharge to public waters, modifications will be required to the wastewater treatment system. The additional power consumed will be 0.13 kwh/kkg (0.12 kwh/ton) processed. For the typical 2,721 kkg/day (3,000 ton/day) facility, the power required will be 14.9 kw (20 horsepower). The annual cost to operate this equipment will be $1,500.

Non-Water Quality Aspects.

1. Air pollution: None
2. Solid Waste Disposal: The sludge will be clamshelled and landfilled.

Pickling - Hydrochloric Acid - Rinse - Alternate I

Additional Energy Requirements. To meet EPA 1983 standards for wastewater discharge to public waters, modifications will be required to the wastewater treatment system. The additional power consumed will be 0.50 kwh/kkg (0.45 kwh/ton) processed. For the typical 2,721 kkg/day (3,000 ton/day) facility, the power required will be 56 kw (75 horsepower). The annual cost to operate this equipment will be $5,625.

Non-Water Quality Aspects.

1. Air Pollution: None
2. Solid Waste Disposal: The sludge will be clamshelled and landfilled.

Alternate II

Additional Energy Requirements. To meet EPA 1983 standards for wastewater discharge to public waters, modifications will be required to the wastewater treatment system. The additional power consumed will be 0.60 kwh/kkg (0.54 kwh/ton) processed. For the typical 2,721 kkg/day (3,000 ton/day) facility, the power required will be 67 kw (90 horsepower). The annual cost to operate this equipment will be $6,750.

Non-Water Quality Aspects.

1. Air Pollution: None
2. Solid Waste Disposal: The sludge will be clamshelled and landfilled.

Additional Energy Requirements. None

Non-Water Quality Aspects.

1. Air Pollution: None
2. Solid Waste Disposal: The sludge will be clamshelled and landfilled.

Hot Coatings - Galvanizing and Terne Plating

Additional Energy Requirements. To meet EPA 1983 standards for wastewater discharge to public waters, modifications will be required to the wastewater treatment system. The additional power consumed will be 3.95 kwh/kkg (3.58 kwh/ton) processed. For the typical 635 kkg/day (700 ton/day) facility, the power required will be 104 kw (140horsepower). The annual cost to operate this equipment will be $10,500.

Non-Water Quality Aspects.

1. Air Pollution: None
2. Solid Waste Disposal: The sludge will be clamshelled and landfilled.

TABLE 63

IRON AND STEELMAKING OPERATIONS
CONTROL AND TREATMENT TECHNOLOGY
FOR RELATED CATEGORIES AND SUBCATEGORIES

CATEGORY/SUBCATEGORY: Hot Forming - Primary

Treatment and/or Control Methods Employed*	Resulting Effluent Levels for Critical Constituents	Status and Reliability	Problems and Limitations	Implementation Time	Land Requirements	Environmental Impact Other Than Water	Solid Waste Generation and Primary Constituents
All Contact Cooling, Descaling and Scarfing Wastewaters							
A. Once-through aqueous discharge from hot forming area scale pits with underflow baffles for trapping oils and grease. Effluent to plant sewers.	mg/l SS 100-200 Oil 50-100 pH 6-9	Widely practiced in industry. Good system if properly designed.	Must maintain periodic cleaning of pit to remove buildup of mill scale which otherwise will wash through.	12 months	1/4 acre (100' x 100')	Waste oils and greases.	Mill scale solids, saturated with oil and grease, consumed internally.
B. Same as Item A except oil skimming equipment is added and sawtooth underflow, overflow weirs added to trap and continuously remove accumulated oils and greases from surface of water. Sawtooth weirs provide more uniform flow discharge from pit to launders.	SS 100-150 Oil 20-50 pH 6-9	Same as Item A - better design.	Same as above, but skimming equipment must be maintained.	15 months	1/4 acre (100' x 100')	Waste oils and greases.	Same as Item A.

* Listed in order of increasing effectiveness

TABLE 63 (Continued)

IRON AND STEELMAKING OPERATIONS
CONTROL AND TREATMENT TECHNOLOGY
FOR RELATED CATEGORIES AND SUBCATEGORIES

CATEGORY/SUBCATEGORY: Hot Forming - Primary

Treatment and/or Control Methods Employed*	Resulting Effluent Levels for Critical Constituents	Status and Reliability	Problems and Limitations	Implementation Time	Land Requirements	Environmental Impact Other Than Water	Solid Waste Generation and Primary Constituents
C. Same as Item B except scale pit effluent sent to clarifiers; clarifier underflow to vacuum filter; filtrate sent back to clarifier inlet. Filter cake sent to sinter plant. Clarifier overflow discharged to sewer. Once-through system.	mg/l SS 50 Oil 15 pH 6-9	Good. Equipment must be maintained.	Proper clarifier operation heavily dependent upon good chemical feed system and clarifier blowdown control.	18 months	1 acre (200' x 200' not including scale pit)	None	Additional mill scale recovered consumed internally.
D. Same as Item C except chemical flocculation facilities added to clarifier. Recycle system with minimal blowdown to control cycles of concentration.	SS 25 Oil 10 pH 6-9	Very good with properly automated operation.	Must closely control backwashing and cleaning of filters. More automation and control required. More HP required.	18 months	2 acres (300' x 300' not including scale pit)	None	Mill scale solids consumed internally.

* Listed in order of increasing effectiveness

TABLE 63

WATER EFFLUENT TREATMENT COSTS
STEEL INDUSTRY

HOT FORMING - PRIMARY

Treatment or Control Technologies Identified under Item III of the Scope of Work:	A	BPCTCA B	BPCTCA C	BATEA D
Investment	$ 199,795	$ 13,965	$ 552,077	$ 412,741
Annual Costs:				
Capital	8,591	601	23,740	17,748
Depreciation	19,979	1,396	55,207	41,274
Operation & Maintenance	6,993	489	19,322	14,446
Sludge Disposal			3,564	
Energy & Power		1,125	28,500	28,500
Oil Disposal		3,494		
Chemical Costs				8,142
TOTAL	$ 35,563	$ 7,105	$ 130,333	$ 110,110

Effluent Quality:

Effluent Constituents Parameters - units	Resulting Effluent Levels			
Flow, gal./ton With No Scarfing With Scarfing	600 800	600 800	600 800	100 100
Suspended Solids, mg/l	100-200	100-150	50	25
Oil and Grease, mg/l	50-100	20-50	15	10
pH	6-9	6-9	6-9	6-9

TABLE 64

IRON AND STEELMAKING OPERATIONS
CONTROL AND TREATMENT TECHNOLOGY
FOR RELATED CATEGORIES AND SUBCATEGORIES

CATEGORY/SUBCATEGORY: Hot Forming - Section

Treatment and/or Control Methods Employed*	Resulting Effluent Levels for Critical Constituents		Status and Reliability	Problems and Limitations	Implementation Time	Land Requirements	Environmental Impact Other Than Water	Solid Waste Generation and Primary Constituents
All Contact Cooling, Descaling and Scarfing Wastewaters								
A. Once-through aqueous discharge from hot forming area scale pits; underflow baffles used to trap oil and grease.		mg/l	Widely practiced in industry. Good system if properly designed.	Must maintain periodic cleaning of pit to remove buildup of mill scale which otherwise will wash through.	12 months	1/4 acre (100' x 100')	Waste oils and grease.	Mill scale solids saturated with oils and grease consumed internally.
	SS	100-200						
	Oil	50-100						
	pH	6-9						
B. Same as Item A except oil skimming equipment is added and sawtooth underflow, overflow weirs added to trap and continuously remove accumulated oils and greases from surface of water. Sawtooth weirs provide more uniform flow discharge from pit to launders.	SS	100-150	Same as Item A - better design.	Same as above, but skimming equipment must be maintained.	15 months	1/4 acre (100' x 100')	Waste oils and greases.	Same as Item A.
	Oil	20-50						
	pH	6-9						

* Listed in order of increasing effectiveness

TABLE 64 (Continued)

IRON AND STEELMAKING OPERATIONS
CONTROL AND TREATMENT TECHNOLOGY
FOR RELATED CATEGORIES AND SUBCATEGORIES

CATEGORY/SUBCATEGORY: Hot Forming - Section

Treatment and/or Control Methods Employed*	Resulting Effluent Levels for Critical Constituents		Status and Reliability	Problems and Limitations	Implementation Time	Land Requirements	Environmental Impact Other Than Water	Solid Waste Generation and Primary Constituents
C. Same as Item B except scale pit effluent sent to clarifier. Clarifier underflow to vacuum filters; filtrate sent back to clarifier inlet. Filter cake sent to sinter plant. Clarifier overflow sent to sewer.		mg/l	Good. Equipment must be maintained.	Proper clarifier operation dependent upon good chemical feed system and clarifier blowdown control.	18 months	1 acre (200' x 200' not including scale pit)	None	Additional mill scale recovered consumed internally.
	SS	50						
	Oil	15						
	pH	6-9						
D. Recycle scale pit effluent to scale flume as required, discharge clarifier effluent.	SS	50	Same as Item C.	Same as Item C.	12 months	None	None	Same as Item C.
	Oil	15						
	pH	6-9						
E. Same as Item D except chemical flocculation added and recycle of clarifier effluent to the spray system via cooling tower; discharge of minimal blowdown.	SS	25	Very good with properly automated operation.	Must closely control backwashing and cleaning of filters. More automation and control required.	24 months	2 acres (300' x 300' not including scale pit)	None	Mill scale solids consumed internally.
	Oil	10						
	pH	6-9						

* Listed in order of increasing effectiveness

TABLE 64

WATER EFFLUENT TREATMENT COSTS
STEEL INDUSTRY

HOT FORMING - SECTION

Treatment or Control Technologies Identified under Item III of the Scope of Work:	A	BPCTCA B	BPCTCA C	BPCTCA D	BATEA E
Investment	$ 216,510	$ 13,529	$ 909,218	$ 620,407	$2,042,425
Annual Costs:					
Capital	9,310	582	39,096	26,677	87,825
Depreciation	21,651	1,353	90,922	62,041	204,242
Operation & Maintenance	7,578	473	31,822	21,714	71,485
Sludge Disposal			6,727		
Energy & Power		900	30,000	11,250	52,500
Oil Disposal		8,894			
Chemical Costs					32,955
TOTAL	$ 38,539	$ 12,202	$ 198,567	$ 121,682	449,007
Effluent Quality:					
Effluent Constituents Parameters - units	Resulting Effluent Levels				
Flow, gal./ton	6500	6500	6500	3000	150
Suspended Solids, mg/l	100-200	100-150	50	50	25
Oil and Grease, mg/l	50-100	20-50	15	15	10
pH	6-9	6-9	6-9	6-9	6-9

TABLE 65

IRON AND STEELMAKING OPERATIONS
CONTROL AND TREATMENT TECHNOLOGY
FOR RELATED CATEGORIES AND SUBCATEGORIES

CATEGORY/SUBCATEGORY: Hot Forming - Flat

Treatment and/or Control Methods Employed*	Resulting Effluent Levels for Critical Constituents		Status and Reliability	Problems and Limitations	Implementation Time	Land Requirements	Environmental Impact Other Than Water	Solid Waste Generation and Primary Constituents
All Contact Descaling and Scarfing Wastewaters								
A. Once-through aqueous discharge from hot forming area scale pits; underflow baffles used to trap oil and grease.		mg/l	Widely practiced in industry. Good system if properly designed.	Must maintain periodic cleaning of pit to remove buildup of mill scale which otherwise will wash through.	12 months	1/4 acre (100' x 100')	Waste oils and grease.	Mill scale solids, saturated with oil and grease, consumed internally.
	SS	100-200						
	Oil	50-100						
	pH	6-9						
B. Same as Item A except oil skimming equipment and sawtooth underflow, overflow weirs are added to trap and continuously remove accumulated oils and greases from surface of water. Sawtooth weirs provide more uniform flow discharge from pit to launders.	SS	100-150	Same as in Item A, better design.	Same as above, but skimming equipment must be maintained.	15 months	1/4 acre (100' x 100')	Waste oils and greases.	Same as in Item A.
	Oil	20-50						
	pH	6-9						

* Listed in order of increasing effectiveness

TABLE 65 (Continued)

IRON AND STEELMAKING OPERATIONS
CONTROL AND TREATMENT TECHNOLOGY
FOR RELATED CATEGORIES AND SUBCATEGORIES

CATEGORY/SUBCATEGORY: Hot Forming - Flat

Treatment and/or Control Methods Employed*	Resulting Effluent Levels for Critical Constituents	Status and Reliability	Problems and Limitations	Implementation Time	Land Requirements	Environmental Impact Other Than Water	Solid Waste Generation and Primary Constituents
C. Same as Item B except scale pit effluent sent to clarifier. Clarifier underflow to vacuum filter; filtrate sent back to clarifier inlet. Filter cake sent to sinter plant. Clarifier overflow sent to sewer.	mg/l SS 50 Oil 15 pH 6-9	Good. Equipment must be maintained.	Proper clarifier operation dependent upon good chemical feed system and clarifier blowdown control.	18 months	1 acre (200' x 200' not including scale pit)	None	Additional mill scale recovered consumed internally.
D. Recycle scale pit effluent to scale flume as required; discharge clarifier effluent.	SS 50 Oil 15 pH 6-9	Same as in Item C.	Same as in Item C.	12 months	None	None	Same as in Item C.
E. Same as Item D except chemical flocculation added and recycle of clarifier effluent to the spray system via cooling tower; discharge of minimal blowdown.	SS 25 Oil 10 pH 6-9	Very good with properly automated operation.	Must closely control backwashing and cleaning of filters. More automation and control required.	24 months	2 acres (300' x 300' not including scale pit)	None	Mill scale solids consumed internally.

* Listed in order of increasing effectiveness

TABLE 65A

WATER EFFLUENT TREATMENT COSTS
STEEL INDUSTRY

HOT FORMING - FLAT - HS & SHEET

Treatment of Control Technologies Identified under Item III of the Scope of Work:	A	BPCTCA B	BPCTCA C	BPCTCA D	BATEA E
Investment	$ 272,940	$ 39,423	$ 3,022,388	$ 826,298	$ 5,249,131
Annual Costs:					
Capital	11,736	1,695	129,962	35,530	225,713
Depreciation	27,294	3,942	302,239	82,630	524,913
Operation & Maintenance	9,553	1,380	105,784	28,920	183,719
Sludge Disposal			33,955		
Energy & Power		3,750	112,500	37,500	150,000
Oil Disposal		29,047			
Chemical Costs					115,596
TOTAL	$ 48,583	$ 39,814	$ 684,440	$ 184,580	$ 1,199,941

Effluent Quality:

Effluent Constituents Parameters - units	Resulting Effluent Levels				
Flow, gal./ton	7800	7800	7800	5500	150
Suspended Solids, mg/l	100-200	100-150	50	50	25
Oil and Grease, mg/l	50-100	20-50	15	15	10
pH	6-9	6-9	6-9	6-9	6-9

TABLE 65B

WATER EFFLUENT TREATMENT COSTS
STEEL INDUSTRY

HOT FORMING - FLAT - PLATE

Treatment of Control Technologies Identified under Item III of the Scope of Work:	A	BPCTCA B	BPCTCA C	BPCTCA D	BATEA E
Investment	$ 267,267	$ 21,312	$ 1,167,146	$ 497,481	$ 2,866,396
Annual Costs:					
Capital	11,492	917	50,187	21,392	123,245
Depreciation	26,727	2,131	116,715	49,748	286,640
Operation & Maintenance	9,354	746	40,850	17,411	100,324
Sludge Disposal			8,757		
Energy & Power		1,125	34,500	7,500	69,000
Oil Disposal		11,578			
Chemical Costs					42,900
TOTAL	$ 47,573	$ 16,497	$ 251,009	$ 96,051	$ 622,118

Effluent Quality:

Effluent Constituents Parameters - units	Resulting Effluent Levels				
Flow, gal./ton	5500	5500	5500	4000	150
Suspended Solids, mg/l	100-200	100-150	50	50	25
Oil and Grease, mg/l	50-100	20-50	15	15	10
pH	6-9	6-9	6-9	6-9	6-9

TABLE 66

IRON AND STEELMAKING OPERATIONS
CONTROL AND TREATMENT TECHNOLOGY
FOR RELATED CATEGORIES AND SUBCATEGORIES

CATEGORY/SUBCATEGORY: Pipe and Tubes

Treatment and/or Control Methods Employed*	Resulting Effluent Levels for Critical Constituents		Status and Reliability	Problems and Limitations	Implementation Time	Land Requirements	Environmental Impact Other Than Water	Solid Waste Generation and Primary Constituents
All Contact Cooling, Descaling and Scarfing Wastewaters		mg/l						
A. Once through aqueous discharge from pipe and tubes area scale pits; underflow baffles used to trap oil and grease	SS Oil pH	100-200 50-100 6-9	Widely practices in industry. Good system if properly designed.	Must maintain periodic cleaning of pit to remove buildup of mill scale which otherwise will wash through.	12 months	1/9 acre (50' x 100')	Waste oils and grease.	Mill scale solids saturated with oils and grease consumed internally.
B. Same as Item A except oil skimming equipment is added and sawtooth underflow, overflow weirs added to trap and continuously remove accumulated oils and greases from surface of water. Sawtooth weirs provide more uniform flow discharge from pit to launders.	SS Oil pH	100-150 20-50 6-9	Same as Item A - better design.	Same as above, but skimming equipment must be maintained.	15 months	1/9 acre (50' x 100')	Waste oils and greases.	Sames as Item A.

* Listed in order of increasing effectiveness

TABLE 66 (Continued)

IRON AND STEELMAKING OPERATIONS
CONTROL AND TREATMENT TECHNOLOGY
FOR RELATED CATEGORIES AND SUBCATEGORIES

CATEGORY/SUBCATEGORY: Pipe and Tubes

Treatment and/or Control Methods Employed*	Resulting Effluent Levels for Critical Constituents		Status and Reliability	Problems and Limitations	Implementation Time	Land Requirements	Environmental Impact Other Than Water	Solid Waste Generation and Primary Constituents
		mg/l						
C. Same as Item B except scale pit effluent sent to clarifier. Clarifier underflow to vacuum filters; filtrate sent back to clarifier inlet. Filter cake sent to sinter plant. Clarifier overflow sent to sewer.	SS Oil pH	50 15 6-9	Good. Equipment must be maintained.	Proper clarifier operation dependent upon good chemical feed system and clarifier blowdown control.	18 months	1 acre (200' x 200') not including scale pit)	None	Additional mill scale recovered consumed internally.
D. Recycle scale pit effluent to scale flume as required; discharge clarifier effluent.	SS Oil pH	50 15 6-9	Same as Item C.	Same as Item C.	12 months	None	None	Same as Item C.
E. Same as Item D except chemical flocculation added and recycle of clarifier effluent to spray system via cooling tower; discharge of minimal blowdown.	SS Oil pH	25 10 6-9	Very good with properly automated operation.	Must closely control backwashing and cleaning of filters. More automation and control required.	24 months	2 acres (300' x 300' not including scale pit)	None	Mill scale solids consumed internally.

* Listed in order of increasing effectiveness

TABLE 66

WATER EFFLUENT TREATMENT COSTS
STEEL INDUSTRY

PIPE AND TUBES

Treatment of Control Technologies Identified under Item III of the Scope of Work:	A	BPCTCA B	BPCTCA C	BPCTCA D	BATFA E
Investment	$ 182,658	$ 10,765	$ 331,392	$ 91,999	$ 510,966
Annual Costs:					
Capital	7,854	462	14,250	3,956	21,971
Depreciation	18,266	1,077	33,139	9,199	51,097
Operation & Maintenance	6,393	377	11,599	3,220	17,884
Sludge Disposal	1,217		1,117		
Energy & Power			16,500	4,500	18,750
Oil Disposal		1,589			
Chemical Costs					4,680
TOTAL	$ 33,730	$ 3,505	$ 76,605	$ 20,875	$ 114,382

Effluent Quality:

Effluent Constituents Parameters - units	Resulting Effluent Levels				
Flow, gal./ton	2500	2500	2500	1250	150
Suspended Solids, mg/l	100-200	100-150	50	50	25
Oil and Grease, mg/l	50-100	20-50	15	15	10
pH	6-9	6-9	6-9	6-9	6-9

TABLE 67

IRON AND STEELMAKING OPERATIONS
CONTROL AND TREATMENT TECHNOLOGY
FOR RELATED CATEGORIES AND SUBCATEGORIES

CATEGORY/SUBCATEGORY: Pickling-Sulfuric Acid - Batch - Concentrates

Treatment and/or control methods employed*	Resulting Effluent Levels for Critical Constituents	Status and Reliability	Problems and Limitations	Implementation Time	Land Requirements	Environmental Impact Other than Water	Solid Waste Generation & Primary Constituents
A. Hauling to off-site disposal area by private contractor for combined treatment with wastes from many different sources, including other industries.	No discharge to on-site receiving stream. May be part of an effluent load elsewhere.	Depends heavily on the reliability of the hauling contractor	Expensive; transfers load elsewhere; limited by available disposal sites	6 months	50' x 100' on-site; many acres elsewhere	Danger of contaminating water supply elsewhere	Forms heavy sludges which are leachable and difficult to dewater
B. Collect spent acid and alkalis separately. Blend equalized spent acid solutions and alkaline cleaning solutions; allow 4-8 hours settling.	Sus. Sol. 100-180mg/l Diss. Fe 0.1-2% pH 3-5	Poor; sporadic nature of batch dumps will rarely give optimum conditions	High impact on receiving streams; no flexibility to treat higher acid loads	6 months	100' x 10[illegible]'	Objectionable sludge settling lagoon causes problems	Same as A

*Listed in order of increasing effectiveness

TABLE 67 (Cont'd)
IRON AND STEELMAKING OPERATIONS
CONTROL AND TREATMENT TECHNOLOGY
FOR RELATED CATEGORIES AND SUBCATEGORIES

CATEGORY/SUBCATEGORY: Pickling Sulfuric Acid - Batch - Concentrates

Treatment and/or control methods employed*	Resulting Effluent Levels for Critical Constituents		Status and Reliability	Problems and Limitations	Implementation Time	Land Requirements	Environmental Impact Other than Water	Solid Waste Generation & Primary Constituents
		mg/l						
C. Equalization and blending of acid and alkaline wastes as in B; aeration; lime treatment; polymer addition; long-term settling.	Sus. Sol. Diss. Fe pH	50 1.0 6-9	Good, when given proper attention and maintenance	May require more aggresive oxidation to eliminate ferrous iron	12 months	400' x 400'	Ties up space for settling lagoon	Same as A
D. On-site acid recovery plant for reclaiming acid from concentrates, rinses, and fume scrubber effluents; recovery of iron as ferrous heptahydrate crystals, which may be sold to chemical processors, sewage treatment plants, or to ferric oxides for reuse in mill.	Sus. Sol. Diss. Fe pH	0 0 -	Excellent, yielding no aqueous discharges. Currently in use at several batch pickling plants.	High initial capital cost, but eventually balanced by recovery of usable products	18-24 months	100' x 200'	None	Ferrous sulfate heptahydrate is high soluble, so it cannot be easily used as landfill where no market exists

*Listed in order of increasing effectiveness

TABLE 67

WATER EFFLUENT TREATMENT COSTS
STEEL INDUSTRY

PICKLING - SULFURIC ACID - BATCH - CONCENTRATES

Treatment or Control Technologies Identified under Item III of the Scope of Work:	A	B	BPCTCA C	BATEA D
Investment	$ 67,500	$ 203,316	$ 83,692	$ 585,400
Annual Costs:				
Capital	2,902	8,742	3,599	25,172
Depreciation	6,750	20,332	8,369	58,540
Operation & Maintenance	2,362	7,116	2,929	20,489
Sludge Disposal			38,220	
Energy & Power	1,500	3,750	375	31,666
Disposal Costs	81,250			
Chemical Costs			11,516	
Less Credit for Acid Recovered				(-6,500)
TOTAL	$ 94,764	$ 39,940	$ 65,008	$ 129,367

Effluent Quality:

Effluent Constituents Parameters - units	Resulting Effluent Levels			
Flow, gal./ton	25	35	35	0
Suspended Solids, mg/l	300-600	100-180	50	0
Dissolved Iron, mg/l	2-5%	0.1-2%	1.0	0
pH	<1	3-5	6-9	0

TABLE 68

IRON AND STEELMAKING OPERATIONS
CONTROL AND TREATMENT TECHNOLOGY
FOR RELATED CATEGORIES AND SUBCATEGORIES

CATEGORY/SUBCATEGORY: Pickling - Sulfuric Acid - Batch - Rinses

Treatment and/or control methods employed*	Resulting Effluent Levels for Critical Constituents		Status and Reliability	Problems and Limitations	Implementation Time	Land Requirements	Environmental Impact Other than Water	Solid Waste Generation & Primary Constituents
		mg/l						
A. No treatment other than restricting the flow rates to a minimum.	Sus. Sol. Diss. Fe pH	250 6000-7000 2-5	Poor, high iron loadings always	High impact on receiving streams	1-2 months	None	None	None
B. Mix running acid rinses with any available running alkaline rinses; allow 4-8 hours settling.	Sus. Sol. Diss. Fe Oil(1) pH	80-160 100-400 20-50 4-6	Poor, quantity and strength of acidic wastes normally exceeds that of alkaline wastes	Same as A	3-4 months	2 acres	Objectionable sludge settling lagoon requires protection	Forms heavy sludges which are leachable and difficult to dewater

(1) This load allowed only when these wastes are treated in combination with cold rolling mill wastes.

*Listed in order of increasing effectiveness

TABLE 68 (Cont'd)
IRON AND STEELMAKING OPERATIONS
CONTROL AND TREATMENT TECHNOLOGY
FOR RELATED CATEGORIES AND SUBCATEGORIES

CATEGORY/SUBCATEGORY: Pickling - Sulfuric Acid - Batch - Rinses

Treatment and/or control methods employed*	Resulting Effluent Levels for Critical Constituents		Status and Reliability	Problems and Limitations	Implementation Time	Land Requirements	Environmental Impact Other than Water	Solid Waste Generation & Primary Constituents
		mg/l						
C. Equalization of acid and alkaline wastes; mixing; aeration; lime treatment; polymer addition; long term settling.	Sus. Sol. Oil(1) Diss. Fe pH	50 10 1.0 6-9	Good, when given proper attention and maintenance	May require additional air oxidation to eliminate ferrous iron	12 months	400' x 400'	Ties up space for lagoon	Same as B
D. Reuse of all acid rinse waters to makeup fresh batches of pickle liquor; use with acid recovery system for reclaiming acid from spent pickle liquor.	Sus. Sol. Oil(1) Dis. Fe pH	0 0 0 -	Excellent, yielding no aqueous discharges. Currently in use at several batch pickling plants.	High initial capital cost, which is eventually balanced by recovery of usable products	18-24 months	100' x 200'	None	The iron salts which form are highly soluble, so landfill use is difficult without special precautions

(1) This load allowed only when these wastes are treated in combination with cold rolling mill wastes.

*Listed in order of increasing effectiveness

TABLE 68

WATER EFFLUENT TREATMENT COSTS
STEEL INDUSTRY

PICKLING - SULFURIC ACID - BATCH - RINSES

Treatment or Control Technologies Identified under Item III of the Scope of Work:	A	B	BPCTCA C	BATEA D
Investment		$ 266,423	$ 124,672	$ 50,900
Annual Costs:				
Capital		11,456	5,361	2,189
Depreciation		26,642	12,467	5,090
Operation & Maintenance		9,325	4,363	1,782
Sludge Disposal		17,940	18,000	
Energy & Power		7,350	1,875	2,754
Chemical Costs		130	1,200	
Less Credit for Recovered Acid and Iron Salts				(-2,049)
TOTAL		$ 72,843	$ 43,266	$ 9,766

Effluent Quality:

Effluent Constituents Parameters - units	Resulting Effluent Levels			
Flow, gal./ton	200	200	200	0
Suspended Solids, mg/l	200-300	80-160	50	0
Oil and Grease, mg/l	-	20-50*	10*	0
Dissolved Iron, mg/l	6000-7000	100-400	1.0	0
pH	2-5	4-6	6-9	0

*This load allowed only when these wastes are treated in combination with cold rolling mill wastes.

TABLE 69

IRON AND STEELMAKING OPERATIONS
CONTROL AND TREATMENT TECHNOLOGY
FOR RELATED CATEGORIES AND SUBCATEGORIES

CATEGORY/SUBCATEGORY: Pickling - Hydrochloric Acid - Concentrates - Alternate I

Treatment and/or Control Methods Employed*	Resulting Effluent Levels for Critical Constituents	Status and Reliability	Problems and Limitations	Implementation Time	Land Requirements	Environmental Impact Other Than Water	Solid Waste Generation and Primary Constituents
A. Collection tank, with subsequent disposal to deep well; or hauling to off-site disposal area by private contractor for combined treatment with other wastes.	No discharge to a receiving stream, but may become part of a contaminant or effluent load elsewhere.	Depends heavily on detailed engineering of deep well; or on reliability of hauling contractor.	Very expensive; transfers loads elsewhere; limited by available surface or subsurface disposal sites.	6-12 months	100' x 100' above ground; thousands of cubic yards below ground if deep well is used.	Improper injection in a deep well could result in serious pollution of present or potential water resources.	Forms heavy sludges which are leachable and difficult to dewater.
B. Regeneration of HCl; treatment of absorber vent scrubber water with aeration, lime neutralization and polymer addition; sedimentation with vacuum filtration of underflow. Gas leaving absorber passes through a water scrubber prior to discharge to atmosphere. Scrubber water (only discharge from system) is neutralized with lime.	mg/l SS 50 Oil(1) 10 Dis. Fe 1.0 pH 6-9	System is good if adequate spores are provided to maintain operation and system is operated at optimum conditions.	Performance varies with roaster dust collector and absorber operation. Final scrubber protects atmospheric quality while scrubber water varies according to absorber performance.	24-36 months	400' x 400'	None	Iron oxide recovered and sent to sinter plants for reuse.

(1) This load allowed only when these wastes are treated in combination with cold rolling mill wastes.

* Listed in order of increasing effectiveness

TABLE 69 (Continued)

IRON AND STEELMAKING OPERATIONS
CONTROL AND TREATMENT TECHNOLOGY
FOR RELATED CATEGORIES AND SUBCATEGORIES

CATEGORY/SUBCATEGORY: Pickling - Hydrochloric Acid - Concentrates - Alternate I

Treatment and/or Control Methods Employed*	Resulting Effluent Levels for Critical Constituents	Status and Reliability	Problems and Limitations	Implementation Time	Land Requirements	Environmental Impact Other Than Water	Solid Waste Generation and Primary Constituents
C. Same as Item B except a recycle system is used in the scrubber. Partial recovery of absorber vent scrubber water; treat blowdown as in (B).	mg/l SS 25 oil(1) 10 Diss. Fe 1.0 pH 6-9	Same as in Item B	Same as in Item B.	24-36 months	400' x 400'	None	Same as in Item B.

(1) This load allowed only when these wastes are treated in combination with cold rolling mill wastes.

* Listed in order of increasing effectiveness

TABLE 69

WATER EFFLUENT TREATMENT COSTS
STEEL INDUSTRY

PICKLING - HYDROCHLORIC ACID - CONCENTRATES - ALTERNATE I

Treatment or Control Technologies Identified under Item III of the Scope of Work:	A	BPCTCA B	BATEA C	D
Investment	$ 402,093	$9,057,448	$ 64,464	
Annual Costs:				
Capital	17,290	389,470	2,771	
Depreciation	40,209	905,745	6,445	
Operation & Maintenance	14,073	317,011	2,256	
Sludge Disposal				
Energy & Power	3,750	7,500	,500	
Disposal Costs	1,044,000			
Chemical Costs		11,045		
Less Credit for Recovered Acid and Iron Salts		(-2,624,530)		
TOTAL	$1,119,322	$(-993,759)	$ 12,972	

Effluent Quality:

Effluent Constituents Parameters - units	Resulting Effluent Levels			
Flow, gal./ton	20	200	30	
Suspended Solids, mg/l	200-400	50	25	
Oil and Grease, mg/l	-	10*	10*	
Dissolved Iron, mg/l	8-12%	1.0	1.0	
pH	<1	6-9	6.9	

*This load allowed only when these wastes are treated in combination with cold rolling mill wastes.

TABLE 70

IRON AND STEELMAKING OPERATIONS
CONTROL AND TREATMENT TECHNOLOGY
FOR RELATED CATEGORIES AND SUBCATEGORIES

CATEGORY/SUBCATEGORY: Pickling - Hydrochloric Acid - Rinses(2) - Alternate I

Treatment and/or Control Methods Employed*	Resulting Effluent Levels for Critical Constituents		Status and Reliability	Problems and Limitations	Implementation Time	Land Requirements	Environmental Impact Other Than Water	Solid Waste Generation and Primary Constituents
A. Equalization; lime addition to pH 5-6 to eliminate free acidity; discharge to stream or metropolitan sewage treatment plant.		mg/l	Poor; high solids and iron loads are objectionable.	Heavy impact on stream or sewage treatment plant.	2-4 months	50' x 100'	None	Forms objectionable iron sludges.
	SS	250-500						
	Oil(1)	20-50						
	Diss. Fe	100-250						
	pH	5-6						
B. To Item A, add additional lime treatment to precipitate iron; mixing; aeration; polymer addition; sedimentation in a thickener, with vacuum filtration of underflows.	SS	50	Good, when given proper attention and maintenance.	High capital cost and chemical cost; sludge hard to dewater.	12-18 months	100' x 200'	None	Forms heavy sludges which are leachable and difficult to dewater or landfill.
	Oil(1)	10						
	Diss. Fe	1.0						
	pH	6-9						
C. Rinse water flow reduction via cascade rinse system.	SS	25	Good with proper attention.	Requires coordination with rinse water flow ratios.	6-12 months	200' x 400'	Ties up usable space for large lagoon.	Same as in Item B.
	Oil(1)	10						
	Diss. Fe	1.0						
	pH	6-9						

(1) This load allowed only when these wastes are treated in combination with cold rolling mill wastes.
(2) If the pickle line has a fume hood scrubber, this water is treated in conjunction with the pickle line rinse water.

* Listed in order of increasing effectiveness

TABLE 70

WATER EFFLUENT TREATMENT COSTS
STEEL INDUSTRY

PICKLING - HYDROCHLORIC ACID - RINSES - ALTERNATE I

Treatment or Control Technologies Identified under Item III of the Scope of Work:	A	BPCTCA B	BATEA C	D
Investment	$ 373,391	$ 583,136	$ 235,9 0	
Annual Costs:				
Capital	16,056	25,075	10,144	
Depreciation	37,339	58,314	23,590	
Operation & Maintenance	13,069	20,410	8,257	
Sludge Disposal		6,521		
Ene gy & Power	5,625	15,000	2,720	
Chemical Costs	18,270	19,418		
Replacement Parts			33,480	
TOTAL	$ 90,359	$ 144,738	$ 78,191	
Effluent Quality:				
Effluent Constituents Parameters - units	Resulting Effluent Levels			
Flow, gal./ton	200 (1)	200 (1)	50 (1)	
Suspended Solids, mg/l	200-400	50	25	
Oil and Grease, mg/l	20-30	10 (2)	10 (2)	
Dissolved Iron, mg/l	100-240	1.0	1.0	
pH	5-6	6-9	6-9	

(1) If the plant has a wet fume hood scrubber system over the pickle tanks, an additional load of 50 gals./ton applies and is added to the flow shown.

(2) This load allowed only when these wastes are treated in combination with cold rolling mill wastes.

TABLE 71

IRON AND STEELMAKING OPERATIONS
CONTROL AND TREATMENT TECHNOLOGY
FOR RELATED CATEGORIES AND SUBCATEGORIES

CATEGORY/SUBCATEGORY: Pickling - Hydrochloric Acid - Concentrates & Rinses - Alternate II(2)

Treatment and/or Control Methods Employed*	Resulting Effluent Levels for Critical Constituents	Status and Reliability	Problems and Limitations	Implementation Time	Land Requirements	Environmental Impact Other Than Water	Solid Waste Generation and Primary Constituents
A. Collection tank for concentrates, with subsequent contract hauling to off-site disposal area for combined treatment with other wastes; lime neutralization of free acidity in rinse; discharge once through.	mg/l SS 200-400 Diss. Fe 8-12% pH <1	Depends on reliability of hauling contractor. Poor; high solids and iron loads are objectionable.	Expensive; transfers load elsewhere; limited by available sites. Heavy impact on stream or sewage treatment plant.	6-12 months	50' x 100'	Truck hauling of highly corrosive materials.	Forms leachable sludges which dewater poorly.
B. Neutralization of spent liquors and rinse waters. To Item A, add additional lime treatment to precipitate iron mixing; aeration; polymer addition; sedimentation in a thickener, with vacuum filtration of underflows.	SS 50 Oil(1) 15 Diss. Fe 1.0 pH 6-9	Good, when given proper attention & maintenance.	High capital cost and chemical cost; sludge hard to dewater.	12-18 months	100' x 200'	None	Forms heavy sludges which are leachable and difficult to dewater or landfill.
C. Rinse water flow reduction via cascade rinse system	SS 25 Oil(1) 10 Diss. Fe 1.0 pH 6-9	Good with proper attention.	Requires coordination with rinse water flow ratios.	6-12 months	100' x 200'	None	Same as (B).

(1) This load allowed only when these wastes are treated in combination with cold rolling mill wastes.
(2) If pickle line has a fume hood scrubber, this water is treated in conjunction with the pickle line rinse water.

* Listed in order of increasing effectiveness

TABLE 71

WATER EFFLUENT TREATMENT COSTS
STEEL INDUSTRY

PICKLING - HYDROCHLORIC ACID - CONCENTRATES & RINSES - ALTERNATE II

Treatment or Control Technologies Identified under Item III of the Scope of Work:	A	BPCTCA B	BATEA C	D
Investment	$ 752,353	$ 874,596	$ 235,900	
Annual Costs:				
Capital	32,351	37,607	10,144	
Depreciation	75,235	87,460	23,590	
Operation & Maintenance	26,332	30,611	8,257	
Disposal Costs: Sludge		152,000		
Disposal Costs: Acid	1,044,000			
Energy & Power	15,000	18,750	2,720	
Replacement Costs			3,480	
Chemical Costs	18,270	396,918		
Less Credit for Recovered Acid and Iron Salts				
TOTAL	$1,211,188	$ 723,346	$ 78,191	

Effluent Quality:

Effluent Constituents Parameters - units	Resulting Effluent Levels			
Flow, gal./ton	220 (1)	230 (1)	80 (1)	
Suspended Solids, mg/l	200-400	50	25	
Oil and Grease, mg/l	-	15 (2)	10 (2)	
Dissolved Iron, mg/l	8-12%	1.0	1.0	
pH	<1	6-9	6-9	

(1) If the plant has a wet fume hood scrubber system over the pickle tanks, an additional load of 50 gals./ton applies and is added to the flow shown.

(2) This load allowed only when these wastes are treated in combination with cold rolling mill wastes.

TABLE 72

IRON AND STEELMAKING OPERATIONS
CONTROL AND TREATMENT TECHNOLOGY
FOR RELATED CATEGORIES AND SUBCATEGORIES

CATEGORY/SUBCATEGORY: Cold Rolling - Recirculation

Treatment and/or Control Methods Employed*	Resulting Effluent Levels for Critical Constituents		Status and Reliability	Problems and Limitations	Implementation Time	Land Requirements	Environmental Impact Other Than Water	Solid Waste Generation and Primary Constituents
		mg/l						
A. Recycle system on as many stands as possible with blowdown from system including tramp oils to oil separator and stream discharge.	SS Oil pH	200 600 6-9	Subject to upsets due to surge flows.	Good only for floating oils.	12-18 months	1 acre (200' x 200')	None	Oil sludge must be incinerated or disposed to landfill.
B. Recycle of rolling solutions with blowdown and tramp oils to undergo oil separation, equalization, chemical treatment, flocculation, air flotation, surface skimming of floating material, final settling in a pond, with subsequent discharge to stream.	SS Oil Diss. Fe pH	25 10 1.0 (1) 6-9	Good with proper attention.	Treatment determined by type of oil received at treatment plant and the rate spent oils are metered into the system.	18-24 months	3 acres (600' x 200')	None	Solids must go to landfill. Recovered oil incinerated or reclaimed.

(1) This load allowed only when these wastes are treated in combination with pickle line rinse wastewaters.

* Listed in order of increasing effectiveness

TABLE 72

WATER EFFLUENT TREATMENT COSTS
STEEL INDUSTRY

COLD ROLLING - RECIRCULATION

Treatment or Control Technologies Identified under Item III of the Scope of Work:	A	BPCTCA BATEA B		
Investment	$ 186,877	$ 267,588		
Annual Costs:				
Capital	8,035	11,501		
Depreciation	18,688	26,759		
Operation & Maintenance	6,541	9,365		
Sludge Disposal	1,958	1,392		
Energy & Power	525	9,750		
Chemical Costs		2,590		
TOTAL	$ 35,747	$ 61,357		

Effluent Quality:

Effluent Constituents Parameters - units	Resulting Effluent Levels			
Flow, gal./ton	25	25		
Suspended Solids, mg/l	200	25		
Oil and Grease, mg/l	600	10		
Dissolved Iron, mg/l	-	1*		
pH	6-9	6-9		

*This load allowed only when these wastes are treated in combination with pickling rinses.

TABLE 73

IRON AND STEELMAKING OPERATIONS
CONTROL AND TREATMENT TECHNOLOGY
FOR RELATED CATEGORIES AND SUBCATEGORIES

CATEGORY/SUBCATEGORY: Cold Rolling - Combination

Treatment and/or Control Methods Employed*	Resulting Effluent Levels for Critical Constituents	mg/l	Status and Reliability	Problems and Limitations	Implementation Time	Land Requirement	Environmental Impact Other Than Water	Solid Waste Generation and Primary Constituents
A. Recirculating stands blowdown and once-through stands rolling oils directed to primary oil skimming and direct discharge to stream.	SS Oil pH	120 360 6-9	Subject to upsets due to surge flows.	Good only for floating oils.	12-18 months	1 acre (200' x 200')	None	Oil sludge must be incinerated or disposed of on landfill.
B. Recirculating stands blowdown and once-through stands rolling oils to undergo oil separation, equalization, chemical treatment, flocculation, air flotation, surface skimming of floating material, final settling in a pond with subsequent discharge to stream.	SS Oil Diss.Fe(1) pH	25 10 1.0 6-9	Good with proper attention.	Treatment determined by type of oil received at treatment plant and the rate spent oils are metered into the system.	18-24 months	3 acres (600' x 200')	None	Solids must go to landfill. Recovered oil incinerated or reclaimed.

(1) This load allowed only when these wastes are treated in combination with pickle line rinse wastewaters.

* Listed in order of increasing effectiveness

TABLE 73

WATER EFFLUENT TREATMENT COSTS
STEEL INDUSTRY

COLD ROLLING - COMBINATION

Treatment or Control Technologies Identified under Item III of the Scope of Work:	A	BPCTCA BATEA B		
Investment	$ 242,245	$1,055,013		
Annual Costs:				
Capital	10,416	45,366		
Depreciation	24,225	105,501		
Operation & Maintenance	8,479	36,925		
Sludge Disposal	15,670	11,143		
Energy & Power	3,000	60,000		
Chemical Costs		20,732		
TOTAL	$ 61,790	$ 279,667		

Effluent Quality:

Effluent Constituents Parameters - units	Resulting Effluent Levels			
Flow, gal./ton	400	400		
Suspended Solids, mg/l	120	25		
Oil and Grease, mg/l	360	10		
Dissolved Iron, mg/l	-	1*		
pH	6-9	6-9		

*This load allowed only when these wastes are treated in combination with pickling rinses.

TABLE 74

IRON AND STEELMAKING OPERATIONS
CONTROL AND TREATMENT TECHNOLOGY
FOR RELATED CATEGORIES AND SUBCATEGORIES

CATEGORY/SUBCATEGORY: Cold Rolling - Direct Application

Treatment and/or Control Methods Employed*	Resulting Effluent Levels for Critical Constituents		Status and Reliability	Problems and Limitations	Implementation Time	Land Requirements	Environmental Impact Other Than Water	Solid Waste Generation and Primary Constituents
		mg/l						
A. Once-through use of rolling oil followed by primary oil skimming and direct discharge to stream.	SS Oil pH	80 200 6-9	Subject to upsets due to surge flows.	Not practical due to high costs of rolling solutions.	12-18 months	1 acre (200' x 200')	None	Oil sludge must be incinerated or disposed of on landfill.
B. Once-through rolling oils and tramp oils to undergo oil separation, equalization, chemical treatment, flocculation, air flotation, surface skimming of floating material, final settling in a pond, with subsequent discharge to stream.	SS Oil Diss.Fe(1) pH	25 10 1.0 6-9	Good with proper attention.	Treatment determined by type of oil received at treatment plant and the rate spent oils are metered into the system.	18-24 months	3 acres (600' x 200')	None	Solids must go to landfill. Recovered oil incinerated or reclaimed.

(1) This load allowed only when these wastes are treated in combination with pickle line rinse wastewaters.

* Listed in order of increasing effectiveness

TABLE 74

WATER EFFLUENT TREATMENT COSTS
STEEL INDUSTRY

COLD ROLLING - DIRECT APPLICATION

Treatment or Control Technologies Identified under Item III of the Scope of Work:	A	BPCTCA BATEA B		
Investment	$ 269,856	$1,083,235		
Annual Costs:				
Capital	11,603	46,579		
Depreciation	26,986	108,323		
Operation & Maintenance	9,445	37,913		
Sludge Disposal	19,500	13,920		
Energy & Power	3,750	60,000		
Chemical Costs		25,792		
TOTAL	$ 71,284	$ 292,527		

Effluent Quality:

Effluent Constituents Parameters - units	Resulting Effluent Levels			
Flow, gal./ton	1000	1000		
Suspended Solids, mg/l	80	25		
Oil and Grease, mg/l	200	10		
Dissolved Iron, mg/l	-	1*		
pH	6-9	6-9		

*This load allowed only when these wastes are treated in combination with pickling rinses.

TABLE 75

IRON AND STEELMAKING OPERATIONS
CONTROL AND TREATMENT TECHNOLOGY
FOR RELATED CATEGORIES AND SUBCATEGORIES

CATEGORY/SUBCATEGORY: Hot Coatings - Galvanizing[1]

Treatment and/or Control Methods Employed*	Resulting Effluent Levels for Critical Constituents	Status and Reliability	Problems and Limitations	Implementation Time	Land Requirements	Environmental Impact Other Than Water	Solid Waste Generation and Primary Constituents
A. Control of wastewater volumes by providing dragout recovery units; and special attention to maintenance of equipment designed to reduce loss of solutions.	mg/l SS 120-200 Oil 25-75 Cr^{+6} 10-12 Tot.Cr 12-16 Tot.Zn 75-140 pH 6-9	Requires above average attention to maintenance for effective control.	When control fails, an immediate high discharge load results.	1-2 months	None required	None	None
B. Separate collection of alkaline and acidic wastewater solutions, with subsequent blending of predetermined flows to allow for precipitation of dissolved metals and a limited amount of settling.	SS 50-100 Oil 15-30 Cr^{+6} 4-6 Tot.Cr 5-10 Tot.Zn 15-75 pH 6-9	Fair. Much depends upon time and space provided for settling.	Different rates of generation of individual wastes may make attainment of proper flow ratio difficult.	3-4 months	1/4 acre (100' x 100')	Forms some semi-solid sludges which cannot be used elsewhere.	Sludges will contain leachable inorganic compounds, primarily zinc, tin and lead salts.
C. To Item B, add chrome reduction system, polymer, flocculation, settling basin with continuous oil skimming.	SS 50 Oil 15 Cr^{+6} 0.02 Tot.Cr 3 Tot.Zn 5 pH 6-9	Good, if properly maintained.	Added chemical costs.	2-3 months	1/4 acre (100' x 100')	Same as in Item 2	Same as in Item 2

* Listed in order of increasing effectiveness

TABLE 75 (continued)

IRON AND STEELMAKING OPERATIONS
CONTROL AND TREATMENT TECHNOLOGY
FOR RELATED CATEGORIES AND SUBCATEGORIES

CATEGORY/SUBCATEGORY: Hot Coatings - Galvanizing(1)

Treatment and/or Control Methods Employed*	Resulting Effluent Levels for Critical Constituents	Status and Reliability	Problems and Limitations	Implementation Time	Land Requirements	Environmental Impact Other Than Water	Solid Waste Generation and Primary Constituents
D. Use of cascade rinsing and recycle of fume hood scrubber waters, treatment of blended wastewaters via lime to obtain optimum pH for metals precipitation, followed by clarification with polymer addition, vacuum filtration of underflows and continuous oil skimming.	mg/l SS 25 Oil 10 Cr^{+6} 0.02 Tot. Cr 0.1 Tot. Zn 2 pH 6-9	Excellent. May be operated with automatic controls to insure proper treatment.	High equipment and chemical costs. Some potential for scale formation.	6-12 months	1 acre (200' x 200')	Dewatered sludge unsuitable for reuse. Must go to landfill, where leaching must be guarded against.	Same as in Item 2.

(1) If the galvanizing line has a fume hood scrubber, these wastewaters are to be treated in conjunction with the galvanizing line rinse waters.

* Listed in order of increasing effectiveness

TABLE 75

WATER EFFLUENT TREATMENT COSTS
STEEL INDUSTRY

HOT COATINGS - GALVANIZING

Treatment or Control Technologies Identified under Item III of the Scope of Work:	A	BPCTCA B	BPCTCA C	BATEA D
Investment	$ 0	$ 585,333	$ 225,995	$ 193,336
Annual Costs:				
Capital	0	25,169	9,718	8,314
Depreciation	0	58,533	22,599	193,333
Operation & Maintenance	0	20,486	7,909	6,767
Sludge Disposal	0			257
Energy & Power	0	7,500	2,250	3,750
Oil Disposal	0		2,548	
Chemical Costs	0		16,092	
TOTAL	$ 0	$ 111,688	$ 61,116	$ 38,421
Effluent Quality:				
Effluent Constituents Parameters - units		Resulting Effluent Levels		
Flow, gal./ton (With No Scrubber)	600	600	600	100
(With Fume Scrubber)	1200	1200	1200	250
Suspended Solids, mg/l	120-200	50-100	50	25
Oil and Grease, mg/l	25-75	15-30	15	10
Chromium, Total, mg/l	12-16	5-10	3	0.1
Chromium, Cr+6, mg/l	10-12	4-6	0.02	0.02
Zinc, mg/l	75-140	15-75	5	2
pH	2-6	3-5	6-9	6-9

TABLE 76

IRON AND STEELMAKING OPERATIONS
CONTROL AND TREATMENT TECHNOLOGY
FOR RELATED CATEGORIES AND SUBCATEGORIES

CATEGORY/SUBCATEGORY: Hot Coatings - Terne(1)

Treatment and/or Control Methods Employed*	Resulting Effluent Levels for Critical Constituents	Status and Reliability	Problems and Limitations	Implementation Time	Land Requirements	Environmental Impact Other Than Water	Solid Waste Generation and Primary Constituents
A. Control of wastewater volumes by providing dragout recovery units; and special attention to maintenance of equipment designed to reduce loss of solutions.	mg/l SS 120-200 Oil 25-75 Total Pb 1.0-2.0 Total Sn 10-25 pH 6-9	Requires above average attention to maintenance for effective control.	When control fails, an immediate high discharge load results.	1-2 months	None Required	None	None
B. Separate collection of alkaline and acidic wastewater solutions, with subsequent blending of predetermined flows to allow for precipitation of dissolved metals and a limited amount of settling.	SS 50-100 Oil 15-30 Tot. Pb 0.75-1.5 Tot. Sn 5-15 pH 6-9	Fair. Much depends upon time and space provided for settling.	Different rates of generation of individual wastes may make attainment of proper flow ratio difficult.	3-4 months	1/4 acre (100' x 100')	Forms some semi-solid sludges which cannot be used elsewhere.	Sludges will contain leachable inorganic compounds, primarily zinc, tin and lead salts.
C. To Item B, add polymer, flocculation, and settling basin with contiguous oil skimming.	SS 50 Oil 15 Tot. Pb 0.5 Tot. Sn 5 pH 6-9	Good, if properly maintained.	Added chemical costs.	2-3 months	1/4 acre (100' x 100')	Same as in Item B.	Same as in Item B.
(1) If the terne line has a fume hood scrubber, these wastes are to be treated in conjunction with the terne line rinse waters.							

* Listed in order of increasing effectiveness

TABLE 76 (Continued)

IRON AND STEELMAKING OPERATIONS
CONTROL AND TREATMENT TECHNOLOGY
FOR RELATED CATEGORIES AND SUBCATEGORIES

CATEGORY/SUBCATEGORY: Hot Coatings - Terne(1)

Treatment and/or Control Methods Employed*	Resulting Effluent Levels for Critical Constituents	Status and Reliability	Problems and Limitations	Implementation Time	Land Requirements	Environmental Impact Other Than Water	Solid Waste Generation and Primary Constituents
D. Use of cascade rinsing and recycle of fume hood scrubber waters, treatment of blended wastewaters via alkali addition to obtain optimum pH for metals precipitation, clarification, polymer addition, vacuum filtration of underflows and continuous oil skimming.	mg/l SS 25 Oil 10 Tot. Pb 0.25 Tot. Sn 2 pH 6-9	Excellent. May be operated with automatic controls to insure proper treatment.	High equipment and chemical costs. Some potential for scale formation.	6-12 months	1 acre (200' x 200')	Dewatered sludge unsuitable for reuse. Must go to landfill, where leaching must be guarded against.	Same as in Item B.

(1) If the terne line has a fume hood scrubber, these wastes are to be treated in conjunction with the terne line rinse waters.

* Listed in order of increasing effectiveness

TABLE 76

WATER EFFLUENT TREATMENT COSTS
STEEL INDUSTRY

HOT COATINGS - TERNE

Treatment or Control Technologies Identified under Item III of the Scope of Work:	A	BPCTCA B	BPCTCA C	BATEA D
Investment	$ 0	$ 585,333	$ 208,538	$ 193,336
Annual Costs:				
Capital	— 0	25,169	8,967	8,314
Depreciation	0	58,533	20,854	19,333
Operation & Maintenance	0	20,486	7,299	6,767
Sludge Disposal	0			257
Energy & Power	0	7,500	1,500	3,750
Oil Disposal	0		2,548	
Chemical Costs	0		12,124	
TOTAL	$ 0	$ 111,688	$ 53,292	$ 38,421
Effluent Quality:				
Effluent Constituents Parameters - units		Resulting Effluent Levels		
Flow, gal./ton (With No Scrubber) (With Fume Scrubber)	600 1200	600 1200	600 1200	100 250
Suspended Solids, mg/l	120-200	50-100	50	25
Oil and Grease, mg/l	25-75	15-30	15	10
Lead, mg/l	1.2-2.0	0.75-1.5	0.5	0.25
Tin, mg/l	10-30	5-15	5	2
pH	2-6	3-5	6-9	6-9

SECTION IX

EFFLUENT QUALITY ATTAINABLE THROUGH THE APPLICATION OF THE BEST PRACTICABLE CONTROL TECHNOLOGY CURRENTLY AVAILABLE

EFFLUENT LIMITATIONS GUIDELINES

The effluent limitations which must be achieved July 1, 1977 are to specify the effluent quality attainable through the application of the Best Practicable Control Technology Currently Available. Best Practicable Control Technology Currently Available is generally based upon the average of the best existing performance by plants of various sizes, ages, and unit processes within the industrial subcategory. This average is not based upon a broad range of plants within the steel industry, but based upon performance levels achieved by plants purported by the industry or by regulatory agencies to be equipped with the best treatment facilities. Experience demonstrated that in some instances these facilities were exemplary only in the control of a portion of the waste parameters present. In those industrial categories where present control and treatment practices are uniformly inadequate, a higher level of control than any currently in place may be required if the technology to achieve such higher level can be practicably applied by July 1, 1977.

Conversely, where limitations based on the "average of the best plants" would involve the application of a technology not considered at this time to be cost-effective, the BPCTCA limitations were set on the basis of the application of other technologies which were considered to be cost-effective. For example, filtration following clarification increases the capital investment in a manner which is disproportionate to the additional solids removal achieved.

Considerations must also be given to:

1. The size and age of equipment and facilities involved

2. The processes employed

3. Non-water quality environmental impact (including energy requirements)

4. The engineering aspects of the application of various types of control techniques

5. Process changes

6. The total cost of application of technology in relation to the effluent reduction benefits to be achieved from such application

Also, Best Practicable Control Technology Currently Available emphasizes treatment facilities at the end of a manufacturing process, but includes the control technologies within the process itself when the latter are considered to be normal practice within an industry.

A further consideration is the degree of economic and engineering reliability which must be established for the technology to be "currently available." As a result of demonstration projects, pilot plants and general use, there must exist a high degree of confidence in the engineering and economic practicability of the technology at the time of commencement of construction or installation of the control facilities.

RATIONALE FOR SELECTION OF BPCTCA

The following paragraphs summarized factors that were considered in selecting the categorization, water use rates, level of treatment technology, effluent concentrations attainable by the technology, and hence the establishment of the effluent limitations for BPCTCA.

Size and Age of Facilities and Land Availability Considerations

As discussed in Section IV, the age and size of steel industry facilities has little direct bearing in the quantity or quality of wastewater generated. Thus, the ELG for a given subcategory of waste source applies equally to all plants regardless of size or age. Land availability for installation of add-on treatment facilities can influence the type of technology utilized to meet the ELG's. This is one of the considerations which can account for a range in the costs that might be incurred.

Consideration of Processes Employed

All plants in a given subcategory use the same or similar production methods, giving similar discharges. There is no evidence that operation of any current process or subprocess will substantially affect capabilities to implement the best practicable control technology currently available. At such time that new processes appear imminent for broad

application, the ELGs should be amended to cover these new sources. No changes in process employed are envisioned as necessary for implementation of this technology for plants in any subcategory. The treatment technologies to achieve BPCTCA are end-ofprocess methods which can be added onto the existing treatment facilities.

Consideration of Non-Water Quality Environmental Impact

Impact of Proposed Limitations on Air Quality. The increased use of recycle systems has the potential for increasing the loss of volatile substances to the atmosphere. Recycle systems are so effective in reducing wastewater volumes, and hence waste loads, to and from treatment systems, and in reducing the size and cost of such treatment systems that a trade-off must be accepted. Recycle systems requiring the use of cooling towers have contributed significantly to reductions of effluent loads, while contributing only minimally to air pollution problems. Careful operation of these systems can avoid or minimize air pollution problems.

Impact of Proposed Limitations on Solid Waste Problems. Consideration has also been given to the solid waste aspects of water pollution controls. The processes for treating the wastewaters from this industry produce considerable volumes of sludges. Much of this material is inert iron oxide which can be reused profitably in melting operations. Other sludges not suitable for reuse must be disposed of to landfills, since they are mainly chemical precipitates which could be little reduced by incineration. Being precipitates, they are by nature relatively insoluble and nonhazardous substances requiring minimal custodial care.

In order to ensure long-term protection of the environment from harmful constituents, special consideration of disposal sites should be made. All landfill sites should be selected so as to prevent horizontal and vertical migration of these contaminants to ground or surface waters. In cases where geologic conditions may not reasonably ensure this, adequate mechanical precautions (e.g., impervious liners) should be taken to ensure long-term protection to the environment. A program of routine periodic sampling and analysis of leachates is advisable. Where appropriate, the location of solid hazardous materials disposal sites should be permanently recorded in the appropriate office of legal jurisdiction.

Impact of Proposed Limitations on Energy Requirements. The effect of water pollution control measures on energy

requirements has also been determined. The additional energy required in the form of electric power to achieve the effluent limitations proposed for BPCTCA and BATEA amounts to less than 3% of the 51.6 billion kwh of electrical energy used by the steel industry in 1972.

The enhancement to water quality management provided by these proposed effluent limitations substantially outweighs the impact on air, solid waste, and energy requirements.

Consideration of the Engineering Aspects of the Application of Various Types of Control Techniques

The level of technology selected as the basis for BPCTCA limitations is considered to be practicable in that the concepts are proven and are currently available for implementation, and may be readily applied as "add-ons" to existing treatment facilities.

Consideration of Process Changes

No in-process changes will be required to achieve the BPCTCA limitations, although recycle water quality changes may occur as a result of efforts to reduce effluent discharge rates. Many plants are employing recycle, cascade uses, or treatment and recycle as a means for minimizing water use and the volume of effluents discharged. The limitations are load limitations (unit weight of pollutant discharged per unit weight of product) only, and not volume or concentration limitations. The limitations can be achieved by extensive treatment of large flows; however, an evaluation of costs indicates that the limitations can usually be achieved most economically by minimizing effluent volumes.

Consideration of Costs Versus Effluent Reduction Benefits

In consideration of the costs of implementing the BPCTCA limitations relative to the benefits to be derived, the limitations were set at values which would not result in excessive capital or operating costs to the industry.

To accomplish this economic evaluation, it was necessary to establish the treatment technologies that could be applied to each subcategory in an add-on fashion, the effluent qualities attainable with each technology, and the costs. In order to determine the added costs, it was necessary to define what treatment processes were already in place and currently being utilized by most of the plants within a

given subcategory. This was established as the reference level of treatment.

Treatment systems were then envisioned which, as add-ons to existing facilities, would achieve significant waste load reductions. Capital and operating costs for these systems were then developed for the average size facility. The average size was determined by dividing the total industry production by the number of operating facilities. The capital costs were developed from a quasi-detailed engineering estimate of the cost of the components of each of the systems. The annual operating cost for each of the facilities was determined by summing the capital recovery (basis ten year straight line depreciation) and capital use (basis 7% interest) charges, operating and maintenance costs, chemical costs, and utility costs.

Cost effectiveness diagrams were then prepared to show the pollution reduction benefits derived relative to the costs incurred. As expected, the diagrams show an increasing cost for treatment per percent reduction obtained as the percent of the initial pollutional load remaining decreased. The BPCTCA limitations were set at the point where the costs per percent pollutant reduction took a sharp break upward toward higher costs per percent of pollutant removed. These cost effectiveness diagrams are presented in Section X.

The initial capital investment and annual expenditures required of the industry to achieve BPCTCA were developed by multiplying the costs (capital or annual) for the average size facility by the number of facilities operating for each subcategory. These costs are summarized in Table 108 in Section X.

After selection was made of the treatment technology to be designated as one means to achieve the BPCTCA limitations for each subcategory, a sketch of each treatment model was prepared. The sketch for each subcategory is presented following the table presenting the BPCTCA limitations for the subcategory.

IDENTIFICATION OF BEST PRACTICABLE CONTROL TECHNOLOGY CURRENTLY AVAILABLE - BPCTCA

Based on the information contained in Sections III through VIII of this report, a determination has been made that the quality of effluent attainable through the application of the Best Practicable Control Technology Currently Available is as listed in Tables 77 throug 92. These tables set forth

the ELGs for the following process subcategories of the steel industry:

I. Hot Forming Primary
II. Hot Forming Section
III. Hot Forming Flat
IV. Pipe and Tubes
V. Pickling - Sulfuric Acid - Batch Concentrated
VI. Pickling - Sulfuric Acid - Batch Rinse
VII. Pickling - Hydrochloric Acid - Concentrated - Alternate I
VIII. Pickling - Hydrochloric Acid - Rinses - Alternate I
IX. Pickling - Hydrochloric Acid - Concentrates and Rinses - Alternate II
X. Cold Rolling - Recirculation
XI. Cold Rolling - Combination
XII. Cold Rolling - Direct Application
XIII. Hot Coatings - Galvanizing
XIV. Hot Coatings - Terne

In establishing the subject guidelines, it should be noted that the resulting limitations or standards are applicable to aqueous waste discharge only, exclusive of noncontact cooling waters. In the section of this report which discusses control and treatment technology for the iron and steelmaking industry as a whole, a qualitative reference has been given regarding "the environmental impact other than water" for the subcategories investigated.

The effluent guidelines established herein take into account only those aqueous constituents considered to be major pollutants in each of the subcategories investigated. In general, the critical parameters were selected for each subcategory on the basis of those waste constituents known to be generated in the specific manufacturing process, and also known to be present in sufficient quantitiy to be inimical to the environment. Certain general parameters, such as suspended solids, naturally include the oxides of iron and silica, however, these latter specific constituents were not included as critical parameters, since adequate removal of the general parameter (suspended solids) in turn provides for adequate removal of the more specific parameters indicated. This does not hold true when certain of the parameters are in the dissolved state; however, in the case of iron oxides generated in the iron and steelmaking processes, they are for the most part insoluble in the relatively neutral effluents in which they are contained. The absence of apparent less important parameters from the guidelines in no way endorses unrestricted discharge of same.

The recommended effluent limitations guidelines for BPCTCA resulting from this study are summarized in Tables 77 to 92. These tables also list the control and treatment technology applicable or normally utilized to reach the constituent levels indicated. These effluent limitations proposed herein are by no means the absolute lowest values attainable (except where no discharge of process wastewater pollutant is recommended) by the indicated technology, but moreover they represent values which can be readily controlled around on a day by day basis.

It should be noted that these effluent limitations represent values not to be exceeded by any 30 continuous day average. The maximum daily effluent loads per unit of production should not exceed these values by a factor of more than three. In the absence of sufficient performance data from the industry to establish these factors on a statistical basis, the factor of three was chosen in consideration of the operating variations allowed for in selecting the 30 continuous day average limitations.

DISCUSSION BY SUBCATEGORIES

The rationale used for developing the BPCTCA effluent limitations guidelines is summarized below for each of the subcategories. All effluent limitations guidelines are presented on a "gross" or absolute basis since for the most part, removals are relatively independent of initial concentrations of contaminants. The ELGs are in kilograms of pollutant per metric ton of product or in pounds of pollutant per 1,000 lbs of product and in these terms only. The ELGs are not a limitation on flow, type of technology to be utilized, or concentrations to be achieved. These items are listed only as a guide to show the basis for the ELGs and may be varied as the discharger desires so long as the ELG loads per unit of production are met.

Hot Forming - Primary

Following is a summary of the factors used to establish the BPCTCA effluent limitation guidelines (ELGs) applying to the Hot Forming Primary subcategory. As far as possible, the stated limits are based upon performance levels attained by the selected plants surveyed during this study. Where treatment levels can be improved by application of additional currently available control and treatment technology, the anticipated reduction of waste loads was included in the estimates.

The BPCTCA ELGs for the Hot Forming Primary subcategory, and the control and treatment technology to achieve these limits, are summarized in Table 77.

Flow. The five plants surveyed in this study, four of which operated essentially on a once-through basis, had average process water applied flows of 2,427 l/kkg (582 gal./ton) of product, with an additional flow of 842 l/kkg (202 gal./ton) where hot scarfing was practiced. The recommended BPCTCA limits are based on flows of 2,500 l/kkg (600 gal./ton) of product. An additional waste volume from hot scarfing is provided for those facilities so equipped, equivalent to 833 l/kkg (200 gal./ton) of product.

Suspended Solids. The five plants surveyed in this subcategory had effluent suspended solids concentrations ranging between 2 and 23 mg/l. The plants utilized chemical flocculation or deep bed filtration to achieve these low levels.

It is felt that these plants are practicing control and treatment technology superior to that expected under the BPCTCA ELGs. However, analysis of the feeds to the filtration systems, following clarification techniques closely approximating BPCTCA treatment technology, showed suspended solids concentrations ranging from 8 to 55 mg/l. Therefore, the BPCTCA ELG for suspended solids for this subcategory has been conservatively set at 0.2150 kg/kkg (0.2500 lbs of solids per ton of product), equivalent to 50 mg/l. An additional load of 0.0417 kg/kkg (0.0834 lbs/ton) is provided for those plants practicing hot scarfing. This value is justified on the basis that all plants will be capable of achieving this value by 1977 in a cost effective manner with technology currently available and in use.

Oil and Grease

The five plants surveyed in this subcategory had effluent oil concentrations ranging between 2 and 8 mg/l. The plants utilized skimming and deep bed filtration to achieve these low levels.

Again, it is felt that most of these plants are practicing control and treatment technology superior to that expected under the BPCTCA ELGs. Considering the fact that the oil concentrations in the feed to the filtration systems ranged from 7 to 12 mg/l, the BPCTCA ELG for oil and grease for this subcategory has been conservatively set at 0.0375 kg/kkg (0.075 lbs of oils per ton of product), equivalent to 15 mg/l at the recommended discharge flow rate. Again, an

TABLE 77

BPCTCA - EFFLUENT LIMITATIONS GUIDELINES

SUBCATEGORY Hot Forming - Primary

CRITICAL PARAMETERS	BPCTCA LIMITATIONS Kg/KKg[1] (LB/1000 LB)	BPCTCA LIMITATIONS mg/l[2]	CONTROL & TREATMENT TECHNOLOGY[3]	ESTIMATED[4] TOTAL COST $/KKg	ESTIMATED[4] TOTAL COST $/TON
Suspended Solids	0.1250 0.0417[5]	50	Scale pit followed by clarification; vacuum filtration of underflow; discharge after treatment (once-through system).		
Oil and Grease	0.0375 0.0125[5]	15	Underflow baffles and continuous skimming equipment on scale pit, followed by natural adsorption to settling solids in clarifier; provisions for surface skimming in clarifier if necessary.	0.121	0.110
pH	6.0-9.0		pH neutralization		
Flow	Most probable value for once-through system is 2500 liters of effluent per kkg of produce (600 gal/ton); excluding all non-contact cooling water.				

(1) kg/kkg (lb/1000 lb) of hot formed product produced.
(2) Milligrams/liter, based on a flow of 2500 liters effluent per kkg of hot formed product(600 gal/ton).
(3) Technology listed is not necessarily all inclusive, nor does it reflect all possible combinations or permutations of treatment methods.
(4) Costs may vary ± 50%, depending on such factors as location, availability of land and chemicals, flow to be treated, treatment technology selected where competing alternatives exist, and extent of perliminary modifications required to accept the indicated control and treatment devices. Estimated total costs shown are only incremental required above those facilities which are normally existing within a plant.
(5) Applies in addition to limitation stated immediately above, if the primary hot forming operation has a hot scarfer wet scrubber associated with the operation. Most probable flow for wet scrubber is 833 l/kkg (200 gal/ton).

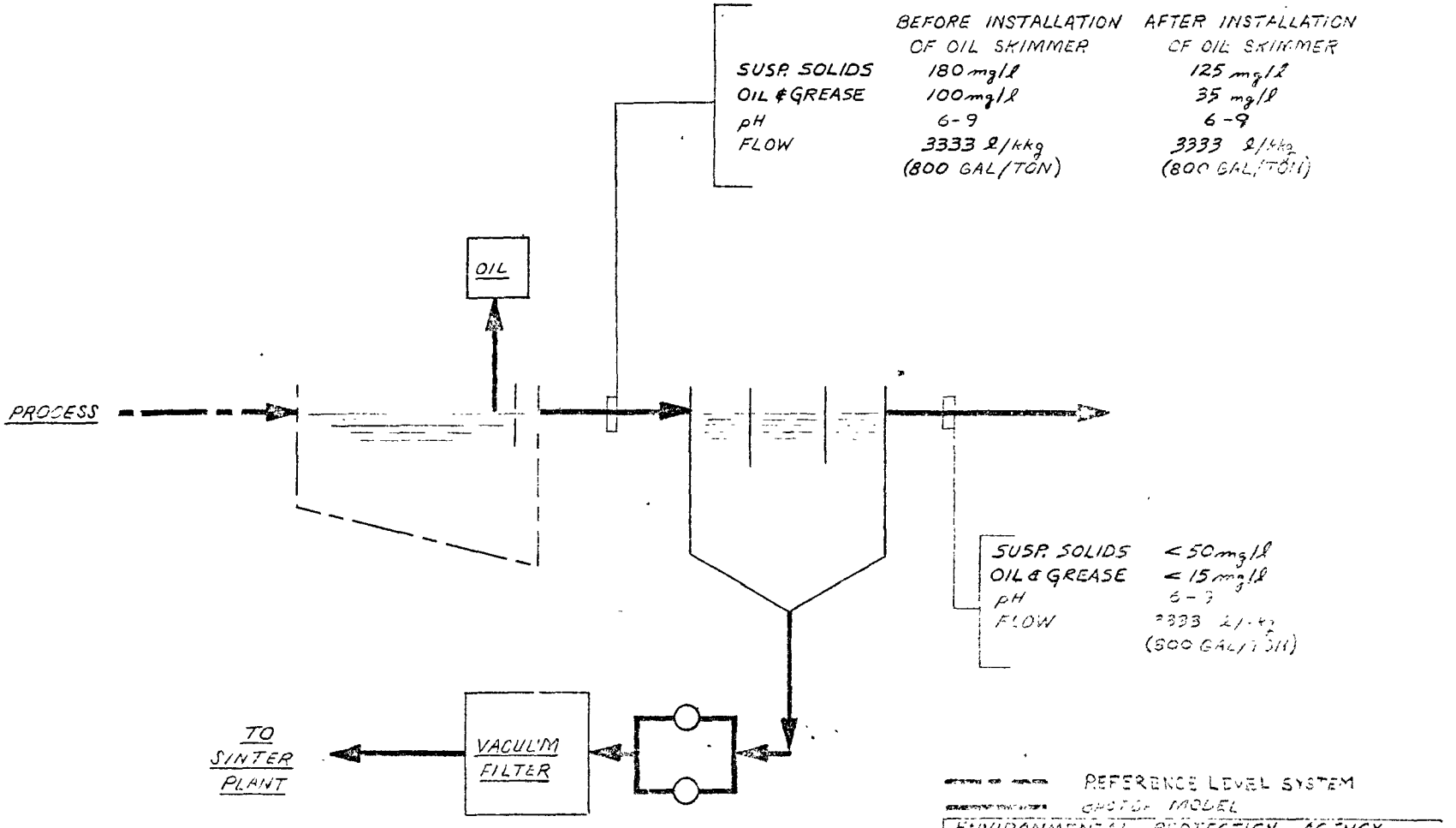
BEFORE INSTALLATION OF OIL SKIMMER
AFTER INSTALLATION OF OIL SKIMMER
SUSP. SOLIDS 180 mg/l 125 mg/l
OIL & GREASE 100 mg/l 35 mg/l
pH 6-9 6-9
FLOW 3333 l/kkg (800 GAL/TON) 3333 l/kkg (800 GAL/TON)
OIL
PROCESS
SUSP. SOLIDS < 50 mg/l
OIL & GREASE < 15 mg/l
pH 6-9
FLOW 3333 l/kkg (800 GAL/TON)
TO SINTER PLANT
VACUUM FILTER
REFERENCE LEVEL SYSTEM
GHOST MODEL
ENVIRONMENTAL PROTECTION AGENCY
STEEL INDUSTRY STUDY
HOT FORMING / PRIMARY
SUBCATEGORY
EPACTCA MODEL
11-22-74
REV. 5-22-75
FIGURE 74

additional allowance of 0.0125 kg/kkg (0.0250 lbs/ton) is provided for hot scarfing. This value is justified on the basis that all plants will be capable of achieving this value by 1977 in a cost effective manner with technology currently available.

pH. All plants surveyed fell within the pH constraint range of 6.0 to 9.0. Both for filter feeds and for final effluents, thus providing a basis for establishing this range as the BPCTCA ELG. Any plant falling outside this range can easily remedy the situation by applying appropriate neutralization procedures to the final effluent.

Hot Forming - Section

Following is a summary of the factors used to establish the BPCTCA effluent limitation guidelines applying to the Hot Forming Section subcategory. As far as possible, the stated limits are based upon performance levels attained by the selected plants surveyed during this study. Where treatment levels can be improved by application of additional currently available control and treatment technology, the anticipated reduction of waste loads was included in the estimates.

The BPCTCA ELGs for the Hot Forming Section subcategory, and the control and treatment technology to achieve these limits, are summarized in Table 78.

Flow. Four of the ten plants surveyed in this subcategory treated wastewater on a once-through basis and had effluent flow rates ranging between 20,900 l/kkg (5,010 gal./ton) and 51,870 l/kkg (12,440 gal./ton) of product, although the two highest flows discharged into the plant intake well for reuse throughout the mills. Four other plants surveyed operated on a recycle basis with blowdown, and had effluent flow rates between 580 l/kkg (140 gal./ton) and 1,460 l/kkg (350 gal./ton) of product. The remaining two plants surveyed had total recycle systems with zero aqueous discharge. The average water application rate for these ten mills was 25,870 l/kkg (6440 gal/ton).

The BPCTCA ELG's are based on a raw waste volume (water application rate) of 27,105 l/kkg (6500 gal/ton), recycle of 14,595 l/kkg (3500 gal/ton) of scale pit effluent back to the flume as scale flushing water, and a discharge after treatment of 12,510 l/kkg (3000 gal/ton) of product. This rate is well within the capability of current technology to achieve, as evidenced by those plants already well below this level by utilizing partial recycle to scale flumes as

TABLE 78

BPCTCA - EFFLUENT LIMITATIONS GUIDELINES

SUBCATEGORY Hot Forming - Section

CRITICAL PARAMETERS	BPCTCA LIMITATIONS Kg/KKg (LB/1000 LB)(1)	BPCTCA LIMITATIONS mg/l(2)	CONTROL & TREATMENT TECHNOLOGY(3)	ESTIMATED(4) TOTAL COST $/KKg	ESTIMATED(4) TOTAL COST $/TON
Suspended Solids	0.6251	50	Scale pit followed by clarification; vacuum filtration of underflow; recycle system to scale flume with blowdown to control cycles of concentration.		
Oil and Grease	0.1875	15	Underflow baffles and continuous skimming equipment on scale pit, followed by natural adsorption to settling solids in clarifier; provisions for surface skimming in clarifier, if necessary.	1.082	0.984
pH		6.0-9.0	pH neutralization		
Flow	Most probable values for moderately tight recycle system is 12,500 liters of effluent per kkg of product (3000 gal/ton), excluding all non-contact cooling water.				

(1) kg/kkg (lb/1000 lb) of hot formed product produced.
(2) Milligrams/liter, based on a flow of 12,500 liters effluent per kkg of hot formed product (3000 gal/ton).
(3) Technology listed is not necessarily all inclusive, nor does it reflect all possible combinations or permutations of treatment methods.
(4) Costs may vary ± 50%, depending on such factors as location, availability of land and chemicals, flow to be treated, treatment technology selected where competing alternatives exist, and extent of preliminary modifications required to accept the indicated control and treatment devices. Estimated total costs shown are only incremental required above those facilities which are normally existing within a plant.

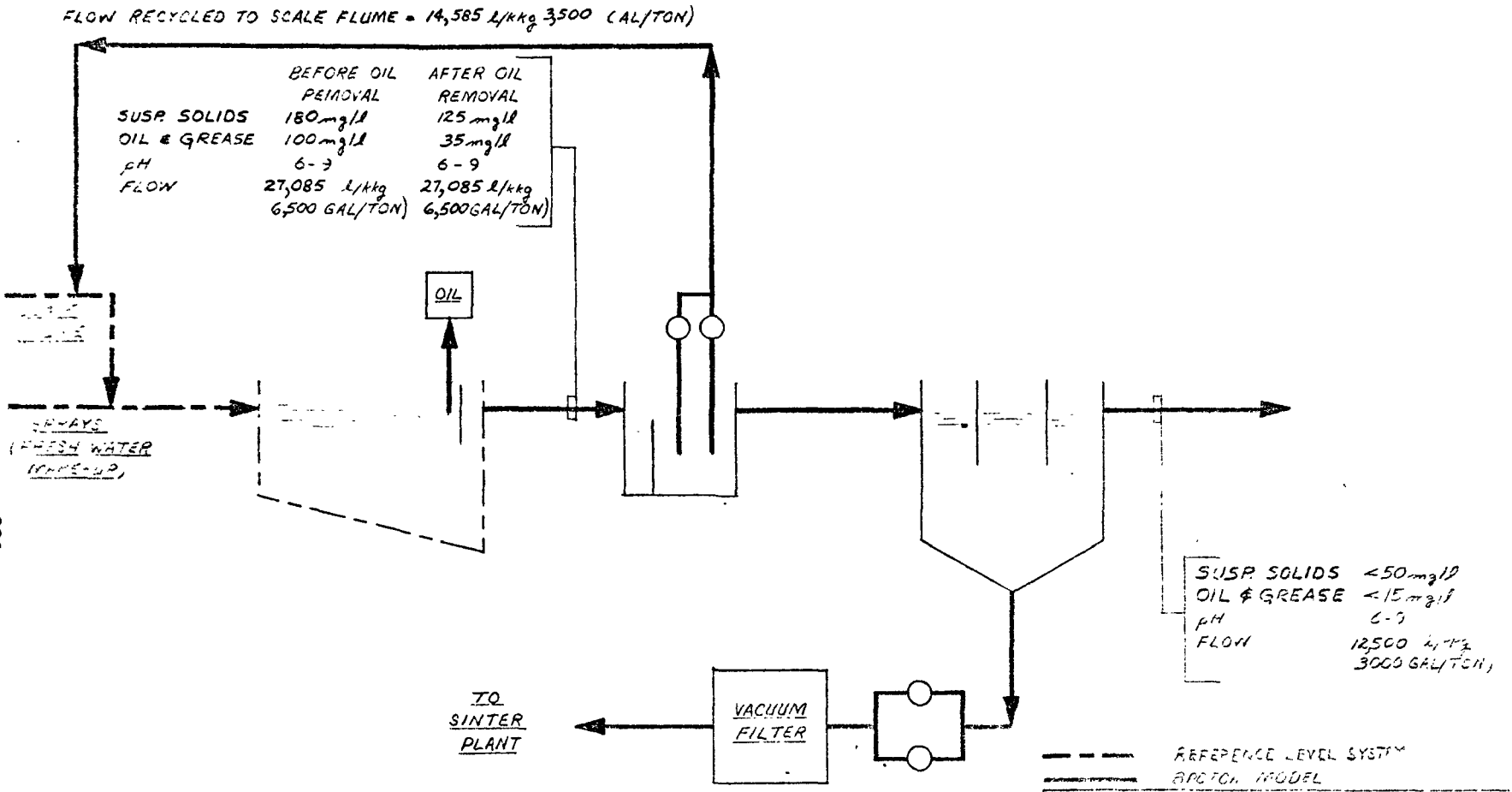

ENVIRONMENTAL PROTECTION AGENCY
STEEL INDUSTRY STUDY
HOT FORMING / SECTION
SUBCATEGORY
BPCTCA MODEL

REV. 12-5-75
5-28-75

FIGURE 75

flushing water. At the same time, this value will provide the impetus for once-through water users to develop recycle systems while at the same time allowing them to achieve this end by 1977 in a cost effective manner.

Suspended Solids. Suspended solids concentrations from the eight plants having discharges ranged from 2 to 71 mg/l. The plants utilizing total recycle had 41 and 47 mg/l suspended matter in the recycle water from the treatment plant. In achieving these suspended solids levels, the plants surveyed practiced plain sedimentation, clarification, centrifugal separation, filtration, or some combination of two or more of these treatment processes.

The average concentration value of suspended solids achieved by the eight plants having discharges from their treatment processes is 40 mg/l. Eliminating the benefits derived from filtration processes, the average concentration for these plants is 43 mg/l. Based upon this value, the BPCTCA ELG for suspended solids has been set at 0.6251 kg/kkg (1.251 lbs/ton) of product, equivalent to 50 mg/l in a 3,000 gal./ton flow. This value is currently being achieved by six of the ten plants surveyed. The remaining plants would be able to achieve this concentration by the addition of additional solids removal equipment or, on an alternate basis, by providing a tighter recycle than dictated by the BPCTCA ELG flow, thus meeting the standard on the basis of pounds of suspended matter discharged.

Oil and Grease. Oil and grease concentrations from the eight plants having discharges ranged from 2 to 18 mg/l. The plants utilizing total recycle were achieving oil and grease levels of 7 to 18 mg/l in their treated recycle water. All plants surveyed used either underflow baffles, or oil skimming along with clarification, or deep bed filtration equipment to achieve these concentrations.

Eliminating the beneficial effects of filtration, the average concentration of oil and grease achieved by all plants surveyed from their treatment processes was 11 mg/l. Based upon this value, the BPCTCA ELG for oil and grease was conservatively set at 0.1875 kg/kkg (0.371 lbs/ton) of product, equivalent to 15 mg/l. This concentration is currently being achieved by eight of the ten plants surveyed.

pH. All of the plants surveyed fell within the pH constraint range of 6.0 to 9.0, thus providing a basis for establishing this range as the BPCTCA ELG. Any plant falling outside of this range can readily remedy the

situation by applying appropriate neutralization procedures to the final effluent.

Hot Forming - Flat

Following is a summary of the factors used to establish the BPCTCA effluent limitation guidelines (ELGs) applying to the Hot Forming Flat subcategory. As far as possible, the stated limits are based upon performance levels attained by the selected plants surveyed during this study. Where treatment levels can be improved by application of additional currently available control and treatment technology, the anticipated reduction of waste loads was included in the estimates.

The BPCTCA ELGs for the Hot Forming Flat subcategory, and the control and treatment technology to achieve these limits, are summarized in Table 79 for sheet and strip mills and in Table 80 for plate mills.

Flow. Two of the five plants surveyed in this subcategory provided wastewater treatment on a once-through basis and had effluent flow rates of 32,150 l/kkg (7,710 gal./ton) and 35,190 l/kkg (8,440 gal./ton) of product. Two other plants (one being a plate mill and one being a hot strip mill) operated on a tight recycle basis with limited blowdown. Their effluent flow rates were 634 l/kkg (152 gal./ton) and 204 l/kkg (49 gal./ton) of product. The fifth plant surveyed had a total recycle system with zero aqueous discharge. The water application rate on the four hot strip mills averaged 32,380 l/kkg (7765 gal/ton) and on the plate mill the water application rate was 23,000 l/gkkg (5533 gal/ton).

The BPCTCA ELG's for hot strip mills are based on an applied rate of 32,526 l/kkg (7800 gal/ton), recycle of 9,591 l/kkg (2300 gal/ton) of scale pit effluent back to the flume, and a dsicharge after treatment of 22,935 l/kkg (5500 gal/ton) of product. The BPCTCA ELG's for plate mills are based on an applied rate of 22,935 l/kkg (5500 gal/ton), recycle of 6255 l/kkg (1500 gal/ton) of scale pit effluent back to the flume, and a discharge after treatment of 16,680 l/kkg (4000 gal/ton) of product. These rates are well within the capability of current technology to achieve, as evidenced by those plants already below this level. At the same time, these values will provide the impetus for oncethrough water users to develop recycle systems, while at the same time allowing them to achieve this end by 1977 in a cost effective manner.

TABLE 79

BPCTCA - EFFLUENT LIMITATIONS GUIDELINES

SUBCATEGORY Hot Forming - Flat - Hot Strip and Sheet

CRITICAL PARAMETERS	BPCTCA LIMITATIONS Kg/KKg (LB/1000 LB)(1)	BPCTCA LIMITATIONS mg/l(2)	CONTROL & TREATMENT TECHNOLOGY(3)	ESTIMATED(4) TOTAL COST $/KKg	ESTIMATED(4) TOTAL COST $/TON
Suspended Solids	1.1461	50	Scale pit followed by clarification; vacuum filtration of underflow; recycle system with scale pit effluent to scale flume.		
Oil and Grease	0.3438	15	Underflow baffles and continuous skimming equipment on scale pit, followed by natural adsorption into settling solids in clarifier; provisions for surface skimming in clarifier if necessary.	0.844	0.767
pH	6.0-9.0		pH neutralization		
Flow	Most probable value for moderately tight recycle system is 22,940 liters of efluent per kkg of product (5500 gal/ton), excluding all non-contact cooling water.				

(1) kg/kkg (lb/100 lb) of hot formed product produced.
(2) Milligram/liter, based on a flow of 22,940 liters effluent per kkg of hot formed product (5500 gal/ton).
(3) Technology listed is not necessarily all inclusive, nor does it reflect all possible combinations or permutations of treatment methods.
(4) Costs may vary ± 50%, depending on such factors as location, availability of land and chemicals, flow to be treated, treatment technology selected where competing alternatives exist, and extent of preliminary modifications required to accept the indicated control and treatment devices. Estimated total costs shown are only incremental required above those facilities which are normally existing within a plant.

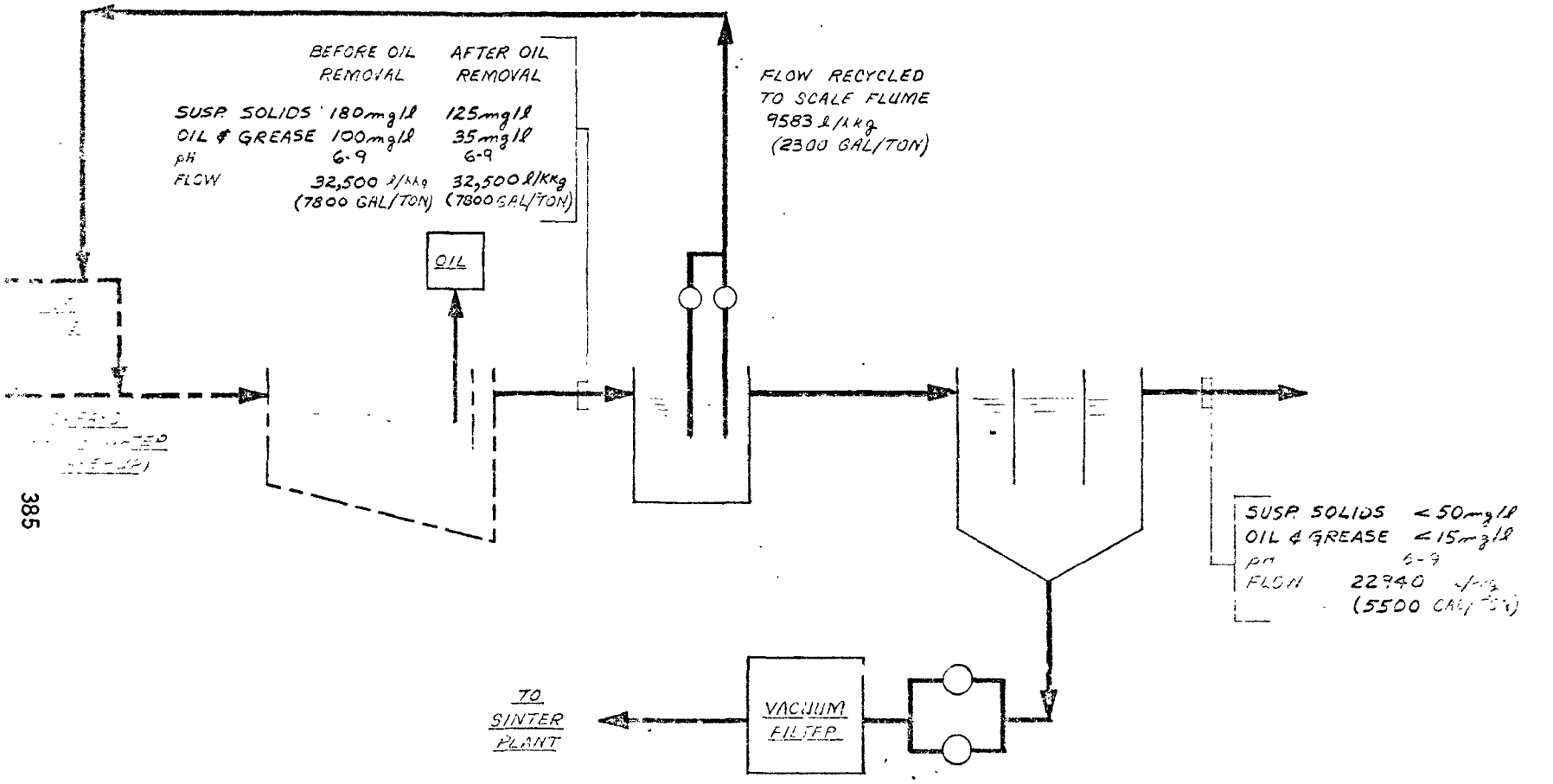

ENVIRONMENTAL PROTECTION AGENCY
STEEL INDUSTRY STUDY
HOT FORMING/FLAT-HOT STRIP AND SHEET SUBCATEGORY
BPCTCA MODEL

REV. 12-3-74 5-22-75	FIGURE 7S

TABLE 80

BPCTCA - EFFLUENT LIMITATIONS GUIDELINES

SUBCATEGORY Hot Forming - Flat - Plate

CRITICAL PARAMETERS	BPCTCA LIMITATIONS Kg/KKg (LB/1000 LB)[1]	BPCTCA LIMITATIONS mg/l[2]	CONTROL & TREATMENT TECHNOLOGY[3]	ESTIMATED[4] TOTAL COST $/KKg	ESTIMATED[4] TOTAL COST $/TON
Suspended Solids	0.8335	50	Scale pit followed by clarification; vacuum filtration of underflow; recycle system with scale pit effluent to scale flume.		
Oil and Grease	0.2500	15	Underflow baffles and continuous skimming equipment on scale pit, followed by natural adsorption into settling solids in clarifier; provisions for surface skimming in clarifier if necessary.	0.769	0.699
pH	6.0 to 9.0		pH neutralization		

Flow: Most probable value for moderately tight recycle system is 16,680 liters of effluent per kkg of product (4000 gal/ton), excluding all non-contact cooling water.

(1) kg/kkg (lb/1000 lb) of hot formed product produced.
(2) Milligram/liter, based on a flow of 16,680 liters effluent per kkg of hot formed product (4000 gal/ton).
(3) Technology listed is not necessarily all inclusive, nor does it reflect all possible combinations or permutations of treatment methods.
(4) Costs may vary ± 50%, depending on such factors as location, availability of land and chemicals, flow to be treated, treatment technology selected where competing alternatives exist, and extent of preliminary modifications required to accept the indicated control and treatment devices. Estimated total costs shown are only incremental required above those facilities which are normally existing within a plant.

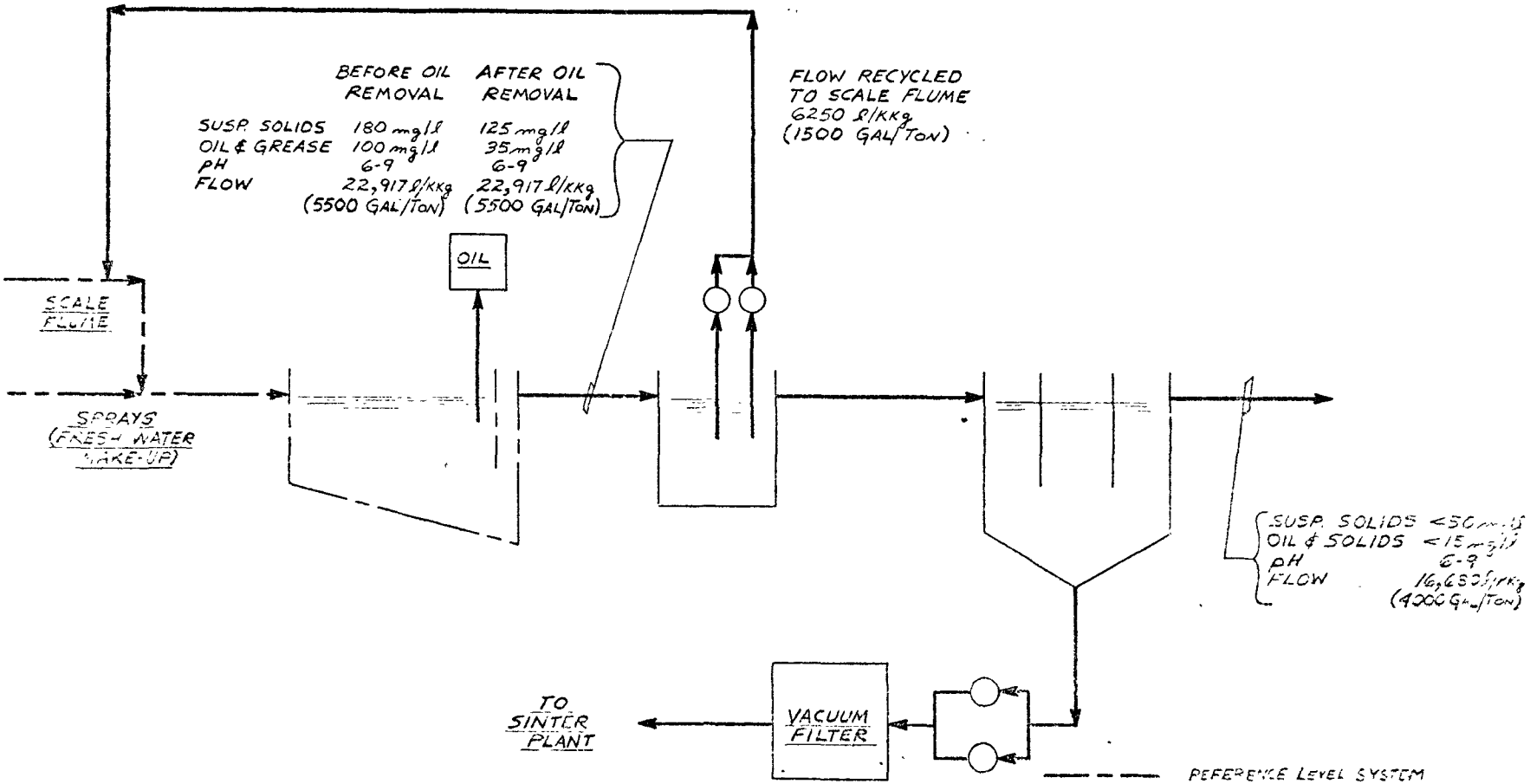

ENVIRONMENTAL PROTECTION AGENCY
STEEL INDUSTRY STUDY
HOT FORMING/FLAT-PLATE
SUBCATEGORY
BPCTCA MODEL

REV [illegible] | FIGURE 77

Suspended Solids. Suspended solids concentration from the four plants having discharges were 8, 4, 30, and 5 mg/l. The plant utilizing total recycle had 40 mg/l suspended matter in the recycle water from the treatment plant. In achieving these suspended solids levels, all of the plants surveyed practiced plain sedimentation, clarification, filtration, or some combination of two or more of these treatment processes. The average concentration of suspended solids actually achieved by five plants from their treatment processes is 17 mg/l. Even after eliminating the benefits derived from higher technology (filters) the typical concentrations after treatment ranged from 5 to 54 mg/l, with an average value of 32 mg/l.

Based upon the above data, the BPCTCA ELG for suspended solids has been conservatively set at 0.8335 and 1.1461 kg/kkg (1.667 and 2.2922 lbs/ton) of product, equivalent to 50 mg/l, for plate mills and sheet/strip mills, respectively. This effluent value is justified since it is currently being achieved by all five plants surveyed.

Oil and Grease. Oil and grease concentrations from the four plants surveyed having discharges were 6, 6.3, 7, and 7.9 mg/l. The plant utilizing total recycle was achieving an oil and grease level of 21 mg/l in its treated recycle water. All plants surveyed used either underflow baffles or oil skimming, along with clarification or deep bed filtration to achieve these concentrations.

The average concentration of oil and grease achieved by all five plants from their treatment processes was 10 mg/l. Even after eliminating the benefits from filtration, oil concentrations averaged 12 mg/l. Based upon this value, the BPCTCA ELG for oil and grease was conservatively set at 0.250 and 0.3438 kg/kkg (0.500 and 0.6876 lbs/ton) of product, equivalent to 15 mg/l, for plate mills and sheet/strip mills, respectively. This final effluent concentration is currently being achieved by all five of the plants surveyed in this subcategory.

pH. All of the plants surveyed fell within the pH constraint range of 6.0 to 9.0, thus providing the basis for establishing this range as the BPCTCA ELG. Any plant falling outside of this range can readily remedy the situation by applying appropriate neutralization procedures to the final effluent.

Pipe and Tubes

As was discussed in Section V - Pipe and Tube Mills, contact process waters generally emanate from roll cooling sprays, pipe cooling baths, and pipe cooling spray quenches. This water usually contains scale and oil which must be removed before the effluent is discharged. The BPCTCA ELGs for the Pipe and Tubes subcategory are summarized in Table 81.

Four of the six plants surveyed had waste loads comprised of from 30-70% noncontact cooling water with total waste loads ranging from 2,148 to 53,250 l/kkg (515 to 12,770 gal./ton). The flow from one plant, including an unknown volume of noncontact cooling water, was five time the average flow from the other five mills (on a gallon per ton basis). The average water applied rate on the remaining five mills was 10,283 l/kkg (2466 gal/ton) but this also included some noncontact cooling water.

The BPCTCA ELG's are based on an applied rate of 10,425 l/kkg (2500 gal/ton), recycle of 5212 l/kkg (1250 gal/ton) of scale pit effluent back to the flume, and a discharge after treatment of 5213 l/kkg (1250 gal/ton) of product.

Suspended Solids. Of the six plants surveyed, only three had effluent discharges. Their effluent suspended solids concentration varied from 10 to 116 mg/l and the average effluent waste load was 0.434 kg/kkg (0.0869 lbs/ton). Suspended solids concentrations, including the solids returned to the process by the total recycle systems, averaged 32 mg/l, following treatment. The BPCTCA ELG for suspended solids has been set conservatively at 0.2605 kg/kkg (0.521 lbs/ton), equivalent to 50 mg/l in a flow of 5,210 l/kkg (1,250 gal./ton) of product.

Only one of the three plants discharging treated effluents is presently achieving a lower pollutant level than that which is proposed. However, all three could meet this limitation if contact and noncontact water segregation were practiced, thus improving the efficiencies of their treatment plants. And three other plants achieve these limitations by practicing zero or very low discharge rates.

Oil and Grease. The effluent oil and grease concentrations varied from 2 to 10 mg/l with an average waste load of 0.189 kg/kkg (0.378 lbs/ton). Using the same reasoning as applied to suspended solids above, the expected effluent waste load (and therefore, the BPCTCA limitation) is 0.0781 kg/kkg (0.1562 lbs/ton) based on 15 mg/l and 5,210 l/kkg (1,250 gal./ton) of product.

TABLE 81

BPCTCA - EFFLUENT LIMITATIONS GUIDELINES

SUBCATEGORY Pipe and Tubes

CRITICAL PARAMETERS	BPCTCA LIMITATIONS Kg/KKg (LB/1000 LB)(1)	BPCTCA LIMITATIONS mg/l(2)	CONTROL & TREATMENT TECHNOLOGY(3)	ESTIMATED(4) TOTAL COST $/KKg	ESTIMATED(4) TOTAL COST $/TON
Suspended Solids	0.2600	50	Scale pit followed by clarification; vacuum filtration of underflow; recycle system to scale flume with blowdown to control cycles of concentration.		
Oil and Grease	0.0782	15	Underflow baffles and continuous skimming equipment on scale pit, followed by natural adsorption to settling solids in clarifier; provisions for surface skimming in clarifier if necessary.	0.890	0.809
pH	6.0-9.0		pH neutralization		
Flow	Most probable value for properly controlled system is 5210 liters per kkg of pipe and tube (1250 gal/ton); excluding all non-contact cooling water.				

(1) Kilograms per metric ton of pipe and tubes or pounds per 1000 pounds of pipe and tube.
(2) Milligrams per liter based on 5210 liters per kkg of pipe and tube (1250 gal/ton).
(3) Available technology list is not necessarily all inclusive nor does it reflect all possible combinations or permutations of treatment methods.
(4) Costs may vary some depending on such factors as location, availability of land and chemicals, flow to be treated, treatment technology selected where competing alternatives exist, and extent of preliminary modifications required to accept the indicated control and treatment devices. Estimated total costs shown are only incremental costs required above those facilities which are normally existing within a plant.

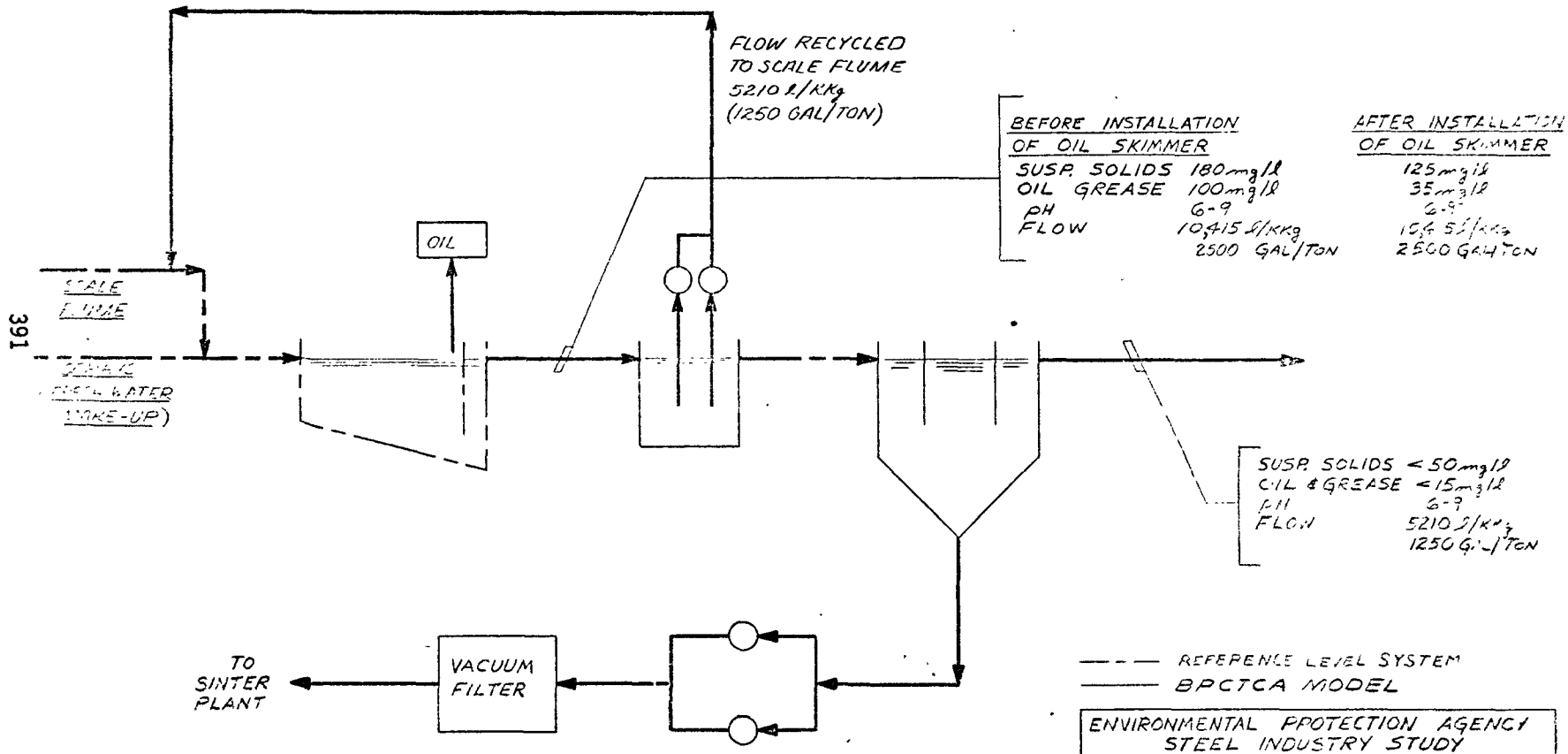

ENVIRONMENTAL PROTECTION AGENCY
STEEL INDUSTRY STUDY
PIPE & TUBE
SUBCATEGORY
BPCTCA MODEL

REV. 5-22-75	FIGURE 78

Besides the three zero discharge plants, two of the three plants discharging treated effluents were achieving this limitation, and the third would likewise achieve it with proper contact and noncontact water segregation, thus improving oil removal efficiency.

pH. Generally, the pH of the effluent from this process should always fall well within the range of 6.0-9.0 which was established as the BPCTCA permissible range. Data from all of the plants surveyed bear this out, with no effluent pH's outside these limits.

Pickling Subcategories

Following is a summary of factors used to establish the BPCTCA Effluent Limitations Guidelines applying to all pickling subcategories. Most of the recommended limitations are based on performance levels attained during the plant survey portion of this study and represent actual operations and waste treatment techniques currently used in this industry. Where no operating plants were found to serve as models for BPCTCA treatment systems, data from plants in a similar pickling subcategory were used as guides. For example, in the batch hydrochloric acid - concentrated subcategory, both of the plants surveyed were eliminating spent pickle baths by contract hauling, so "treatment" technology was not being practiced on the site. For this reason, the treatment sequence for the continuous hydrochloric acid - concentrated subcategory and, subsequently, the BPCTCA levels recommended for that subcategory were applied to batch hydrochloric acid.

It was impractical to reduce the number of pickling subcategories. Even though final concentrations of critical parameters after treatment were essentially the same across all subcategories, the variations in normal flow rates between batch and continuous operations; concentrated spent pickling solutions and diluted rinse waters; and differing requirements for fume scrubbing for hydrochloric versus sulfuric pickling lines necessitates individual load limitations for each of six pickling subdivisions. Discussion by subcategory follows.

Pickling - Sulfuric Acid - Batch Concentrated

The BPCTCA ELGs for this subcategory are presented in Table 82.

Six plants in this subcategory were surveyed, including three pickling rod and wire products; two pickling bundles

TABLE 82

BPCTCA - EFFLUENT LIMITATIONS GUIDELINES

SUBCATEGORY Pickling - Sulfuric Acid - Batch - Concentrates

CRITICAL PARAMETERS	BPCTCA LIMITATIONS Kg/KKg[1] (LB/1000 LB)	BPCTCA LIMITATIONS mg/l[2]	CONTROL & TREATMENT TECHNOLOGY[3]	ESTIMATED[4] TOTAL COST $/KKg	ESTIMATED[4] TOTAL COST $/TON
Suspended Solids	0.0073	50	Equalization of acid and alkaline wastes. Blending, mixing & aeration. Lime treatment with polymer addition. Extended settling.	1.100	1.000
Dissolved iron	0.00015	1	pH neutralization		
pH	6.0 - 9.0				
Flow	Most probable value is 146 liters of effluent per kkg of product (35 gal/ton); excluding all non-contact cooling water.				

(1) Kilograms per metric ton of steel pickled or pounds per 1000 pounds of steel pickled.
(2) Milligrams per liter based on 146 liters effluent per kkg of steel pickled (35 gal/ton).
(3) Available technology listed is not necessarily all inclusive nor does it reflect all possible combinations or permutations of treatment methods.
(4) Costs may vary some depending on such factors as location, availability of land and chemicals, flow to be treated, treatment technology selected where competing alternatives exist, and extent of preliminary modifications required to accept the indicated control and treatment devices. Estimated total costs shown are only incremental costs required above those facilities which are normally existing within a plant.

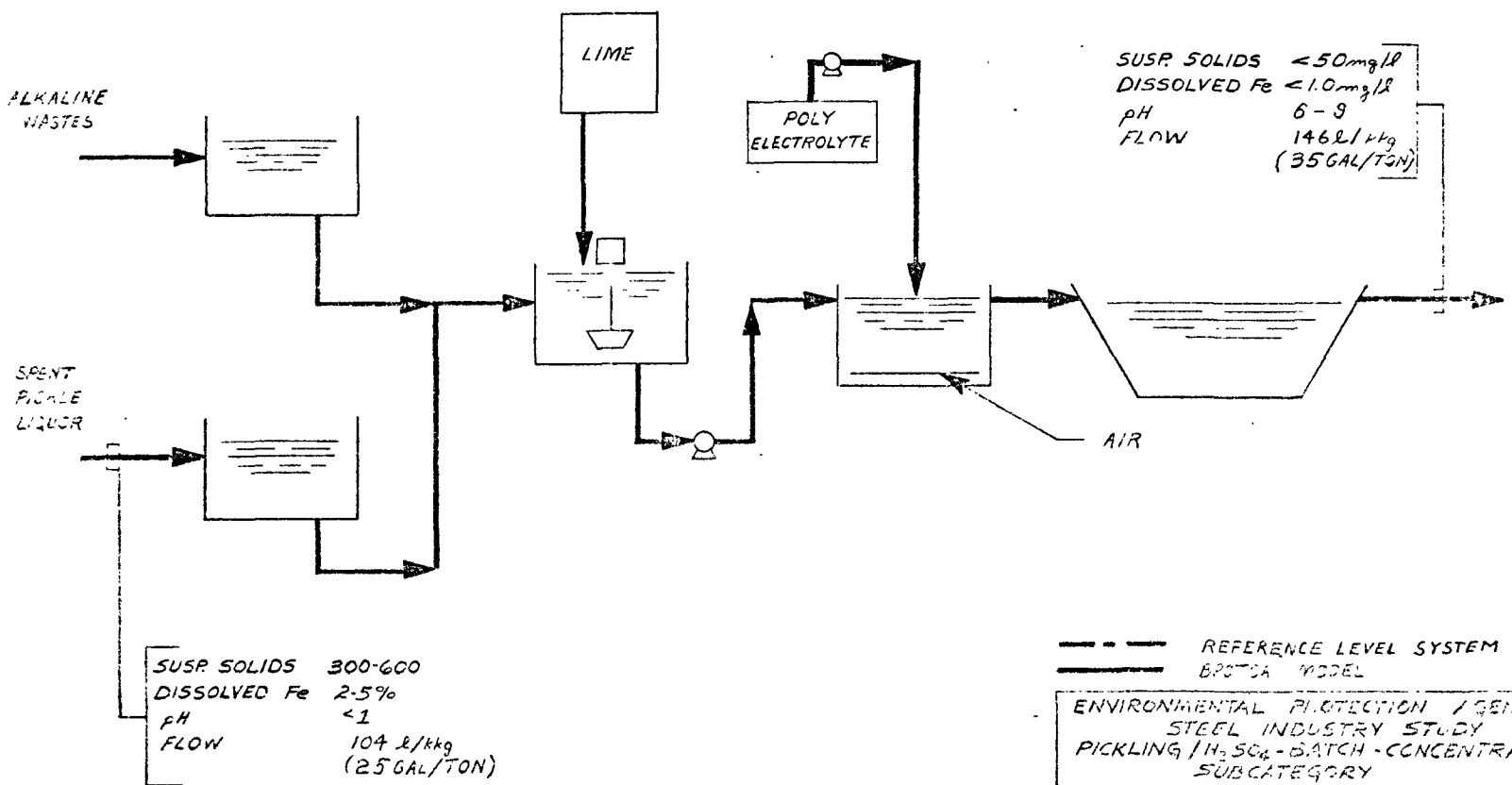
ALKALINE WASTES
SPENT PICKLE LIQUOR
LIME
POLY ELECTROLYTE
AIR
SUSP. SOLIDS <50mg/l
DISSOLVED Fe <1.0mg/l
pH 6-9
FLOW 146 l/kkg (35 GAL/TON)
SUSP. SOLIDS 300-600
DISSOLVED Fe 2-5%
pH <1
FLOW 104 l/kkg (25 GAL/TON)
REFERENCE LEVEL SYSTEM
BPCTCA MODEL
ENVIRONMENTAL PROTECTION AGENCY
STEEL INDUSTRY STUDY
PICKLING / H_2SO_4 - BATCH - CONCENTRATED
SUBCATEGORY
BPCTCA MODEL
REV 5-22-75
FIGURE 79

of pipes and tubing; and one pickling bar product. At one of the rod and wire mills, two pickling lines were surveyed. Production rates and, consequently, acid consumption rates, are relatively small compared to continuous pickling operations. Of the six plants, only one (the largest producer) was discharging a treated effluent from the batch sulfuric acid pickling - concentrated process after equalization and blending with rinses and alkaline cleaners. Two of the other plants paid an outside contractor to haul spent concentrates off the premises for subsequent disposal elsewhere, while the remaining three plants operate efficient acid recovery plants on site to recover unreacted sulfuric acid for reuse in pickling operations, along with a ferrous sulfate heptahydrate crystalline solid which is sold as a by-product. Two of these latter plants have no aqueous discharges from their processes, since even the rinse waters and fume scrubber effluents are recovered.

Since there may not be sufficient time for industry-wide application of the acid recovery technology by July 1, 1977, and due to other considerations as well, it was decided to set recommended BPCTCA Limitations Guidelines based on the one plant actually discharging treated spent pickle liquor, leaving the no discharge acid recovery systems stand as BATEA. The flow rate of spent sulfuric acid concentrates discharged by the one plant treating such wastes, a pipe and tube mill, averaged 5.54 gallons of spent acid per ton of product batch pickled. This was blended at ratios of six or seven to one with spent alkaline cleaners and alkaline and acid rinse waters in an equalization tank, treated with acetylene sludges (an alkaline waste material), and allowed to settle in lagoons for one to two days prior to discharge of supernatants. Effluent quality was used to establish the recommended BPCTCA limits which follow.

Suspended Solids. A BPCTCA limits of 0.0073 kg/kkg (0.0146 lbs of solids per ton) of steel pickled is recommended as the contribution from the treated spent pickle liquor after addition of neutralizing agents, equivalent to 50 mg/l based on a 146 l/kkg (35 gal./ton) flow rate. The one plant with a waste discharge was attaining a total suspended solids loading of 25% of the combined recommended limit for concentrates and rinses, although the concentration did exceed 50 mg/l because the total combined discharge flow attributable to the spent pickle liquor and rinse waters was 15% of the flows used as the basis for settling concentrate and rinse water ELGs. A treatment sequence utilizing equalization of wastes, mixing and aeration, lime or other alkaline treatment, polymer addition, and long-term settling

may be used to attain the recommended BPCTCA suspended solids level.

Dissolved Iron. A BPCTCA limit of 0.00015 kg/kkg (0.00030 lbs of dissolved iron per ton) of steel pickled is recommended as the contribution from the spent pickle liquor concentrates, equivalent to 1.0 mg/l based on a flow rate of 146 l/kkg (35 gal./ton) of steel pickled. The plant above discharged dissolved iron at 4% of this level, mainly due to the successful alkaline treatment and long-term settling provided for the raw waste loads. The sequence of treatment required for attaining the recommended total suspended solids limits will enable plants to achieve the BPCTCA dissolved iron limits also.

Pickling - Batch Sulfuric Acid - Rinse Waters

The BPCTCA ELGs for this subcategory are presented in Table 83.

The same six plants reported above for batch sulfuric acid - concentrated were surveyed for current practices of rinse water control and treatment technology. One of the rod and wire operations was running two separate pickling lines, so there was actual operating data from seven lines. Of these, three achieved no discharge of rinse waters or fume scrubber effluents by reusing these flows to make up fresh batches of pickling solution or by total recycle of rinse waters with lime treatment within the loop to precipitate out iron salts, which then were settled out in a lagoon within the loop. The remaining four rinse water discharges ranged from 16.9 to 464 gallons of rinse water per ton of steel pickled. Treatment of the waste discharges varied from no treatment other than minimizing flows (the 16.9 gal./ton plant), through systems for mixing and diluting with alkaline wastes, to the treatment sequence discussed above for pickling concentrates. Recommended BPCTCA limitations on critical parameters follows.

Suspended Solids. A BPCTCA limit of 0.0417 kg/kkg (0.0834 lbs of solids per ton) of steel pickled is recommended, equivalent to 50 mg/l based on a discharge flow rate of 833 l/kkg (200 gal./ton) of steel pickled. Suspended solids loads from the four plants which discharged treated or untreated pickling rinse waters ranged from 0.0185 to 0.151 lbs/ton, and three of the four lines were achieving the recommended limit. The remaining line provided no treatment other than tight flow control. The same treatment sequence recommended for batch sulfuric acid - concentrated BPCTCA limitations, namely, equalization of wastewaters, mixing and

TABLE 83

BPCTCA - EFFLUENT LIMITATIONS GUIDELINES

SUBCATEGORY Pickling - Sulfuric Acid - Batch - Rinse

CRITICAL PARAMETERS	BPCTCA LIMITATIONS Kg/KKg (LB/1000 LB)(1)	BPCTCA LIMITATIONS mg/l(2)	CONTROL & TREATMENT TECHNOLOGY(3)	ESTIMATED(4) TOTAL COST $/KKg	ESTIMATED(4) TOTAL COST $/TON
Suspended Solids	0.0417	50	Equalization of acid & alkaline wastes. Blending, mixing & aeration. Lime treatment with polymer addition. Extended settling.	0.732	0.666
Oil and Grease(5)	0.0083	10			
Dissolved Iron	0.00083	1	pH neutralization		
pH	6.0 - 9.0				
Flow	Most probable value is 833 liters of effluent per kkg of product (200 gal/ton); excluding all non-contact cooling water.				

(1) Kilograms per metric ton of steel pickled or pounds per 1000 pounds of steel pickled.
(2) Milligrams per liter based on 833 liters effluent per kkg of steel pickled (200 gal/ton).
(3) Available technology listed is not necessarily all inclusive nor does it reflect all possible combinations or permutations of treatment methods.
(4) Costs may vary some depending on such factors as location, availability of land and chemicals, flow to be treated, treatment technology selected where competing alternatives exist, and extent of preliminary modifications required to accept the indicated control and treatment devices. Estimated total costs shown are only incremental costs required above those facilities which are normally existing within a plant.
(5) This load is allowed only when these wastes are treated in combination with cold rolling mill wastes.

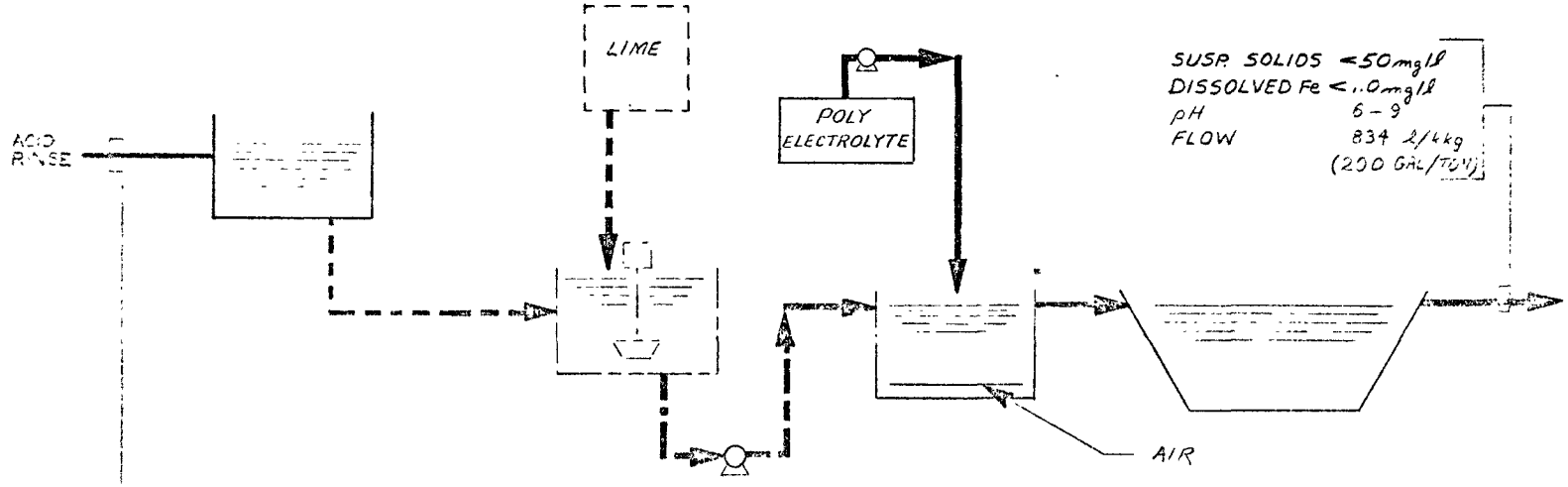

ENVIRONMENTAL PROTECTION AGENCY
STEEL INDUSTRY STUDY
PICKLING / H_2SO_4 BATCH-RINSE
SUBCATEGORY
BPCTCA MODEL

REV. 5-22-75 | FIGURE 80

aeration, lime treatment (preferably with a polymer added), and long-term settling may be used to treat rinse waters at the same time.

Dissolved Iron. A BPCTCA limit of 0.00083 kg/kkg (0.00167 lbs of dissolved iron per ton) of steel pickled is recommended, equivalent to 1.0 mg/l based on a 833 l/kkg (200 gal./ton) flow rate. Data from the four rinse lines discharging wastes showed a range from 0.000012 to 0.915 lbs/ton, but three of the four were less than the recommended BPCTCA limit both in load and in concentration. Again, the exception was the line providing no treatment other than flow reduction. The sequence of treatments described above will achieve the recommended BPCTCA limitation for dissolved iron.

Pickling - Continuous Sulfuric Acid - Concentrates and Rinse Waters

The BPCTCA ELGs for this subcategory are as yet undeveloped, awaiting the completion of additional plant surveys to provide an expanded data base.

Only one plant in this subcategory has been surveyed thus far - a 300 ton per day continuous strip pickling operation. This unit was practicing a high degree of treatment technology and was producing no aqueous discharge. However, further examples of sulfuric acid pickling using continuous processes will have to be surveyed to insure the applicability of this technology to the entire subcateogory. Temporarily deferred pending completion of the survey.

Pickling - Hydrochloric Acid - Batch and Continuous - Concentrates

The BPCTCA ELGs for this subcategory are presented in Table 84. If regeneration is practiced the BPCTCA ELG's for this subcategory are presented in Table 85. If neutralization is practiced the BPCTCA ELG's for this subcategory are presented in Table 87.

Batch Pickling Operations. A relatively small number of pickling operations, predominantly rod and wire processors, use hydrochloric acid in batch pickling systems. Production rates on these units are about half of those for corresponding sulfuric acid lines, so most batch operators do not generate enough spent hydrochloric acid pickle liquor to make acid recovery units practical. Instead, the general practice has been contract hauling of batches of spent

TABLE 84

BPCTCA - EFFLUENT LIMITATIONS GUIDELINES

SUBCATEGORY Pickling - Hydrochloric Acid - Concentrates

CRITICAL PARAMETERS	BPCTCA LIMITATIONS Kg/KKg (LB/1000 LB)(1)	BPCTCA LIMITATIONS mg/l(2)	CONTROL & TREATMENT TECHNOLOGY(3)	ESTIMATED(4) TOTAL COST $/KKG	ESTIMATED(4) TOTAL COST $/TON
Suspended Solids	0.0063	50	Segregated collection with neutralization by waste blending; Line addition followed by mixing aeriation, polymer addition and settling	0.609	0.554
Oil and Grease(5)	0.0013	10	pH neutralization		
Dissolve Iron	0.00013	1			
pH	6.0 - 9.0				
Flow	Most probable value is 125 liters of effluent per kkg of product (30 gal/ton); excluding all non-contact cooling water.				

(1) Kilograms per metric ton of steel pickled or pounds per 1000 pounds of steel pickled.
(2) Milligrams per liter based on 125 liters effluent per kkg of steel pickled (30 gal/ton).
(3) Available technology listed is not necessarily all inclusive nor does it reflect all possible combinations or permutations of treatment methods.
(4) Costs may vary some depending on such factors as location, availability of land and chemicals, flow to be treated, treatment technology selected where competing alternatives exist, and extent of preliminary modifications required to accept the indicated control and treatment devices. Estimated total costs shown are only incremental costs required above those facilities which are normally existing within a plant.
(5) This load is allowed only when these wastes are treated in combination with cold rolling mill wastes.

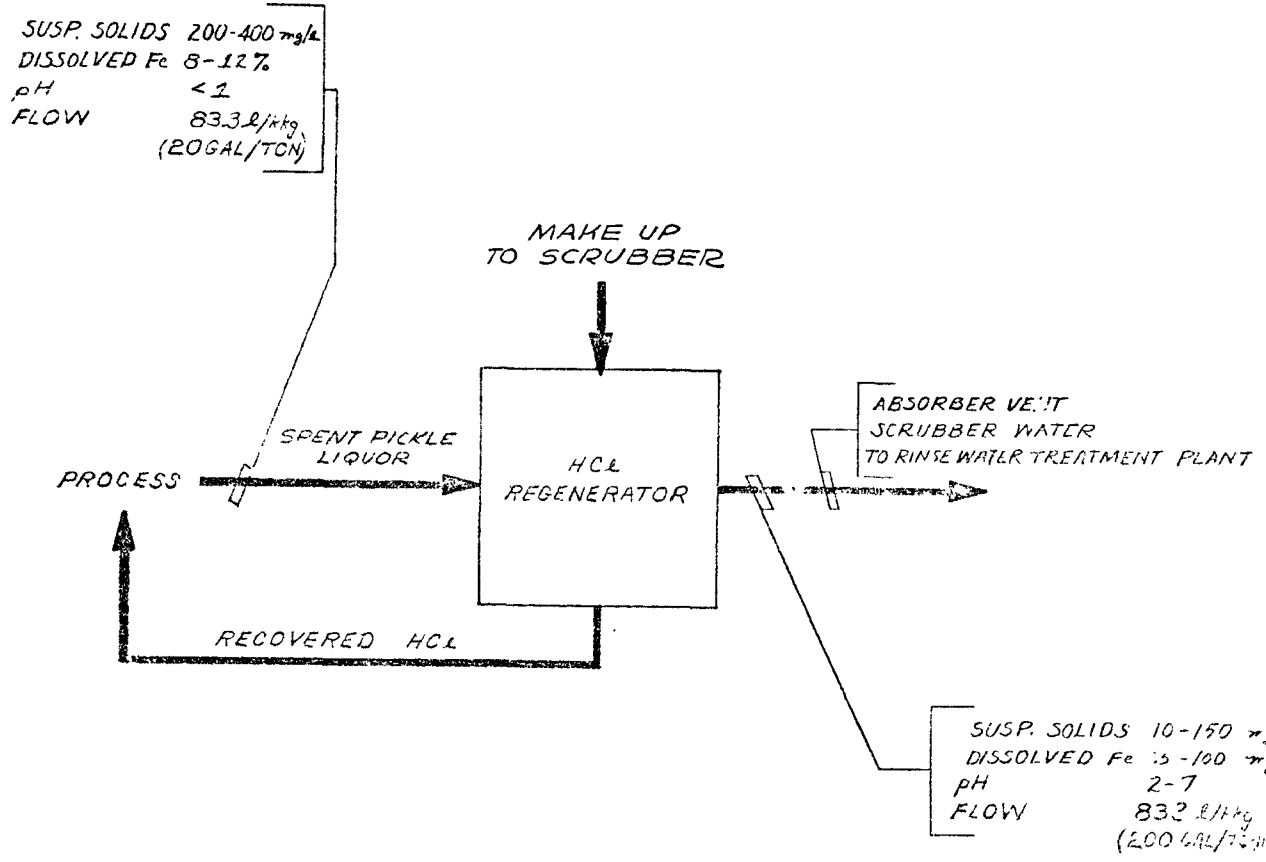

REFERENCE LEVEL SYSTEM
BPCTCA MODEL

EVIRONMENTAL PROTECTION AGENCY
STEEL INDUSTRY STUDY
PICKLING/HCL-CONCENTRATED-ALTERNATE II
SUBCATEGORY
BPCTCA MODEL

PEV	11-27-74 5-22-75	FIGURE 81

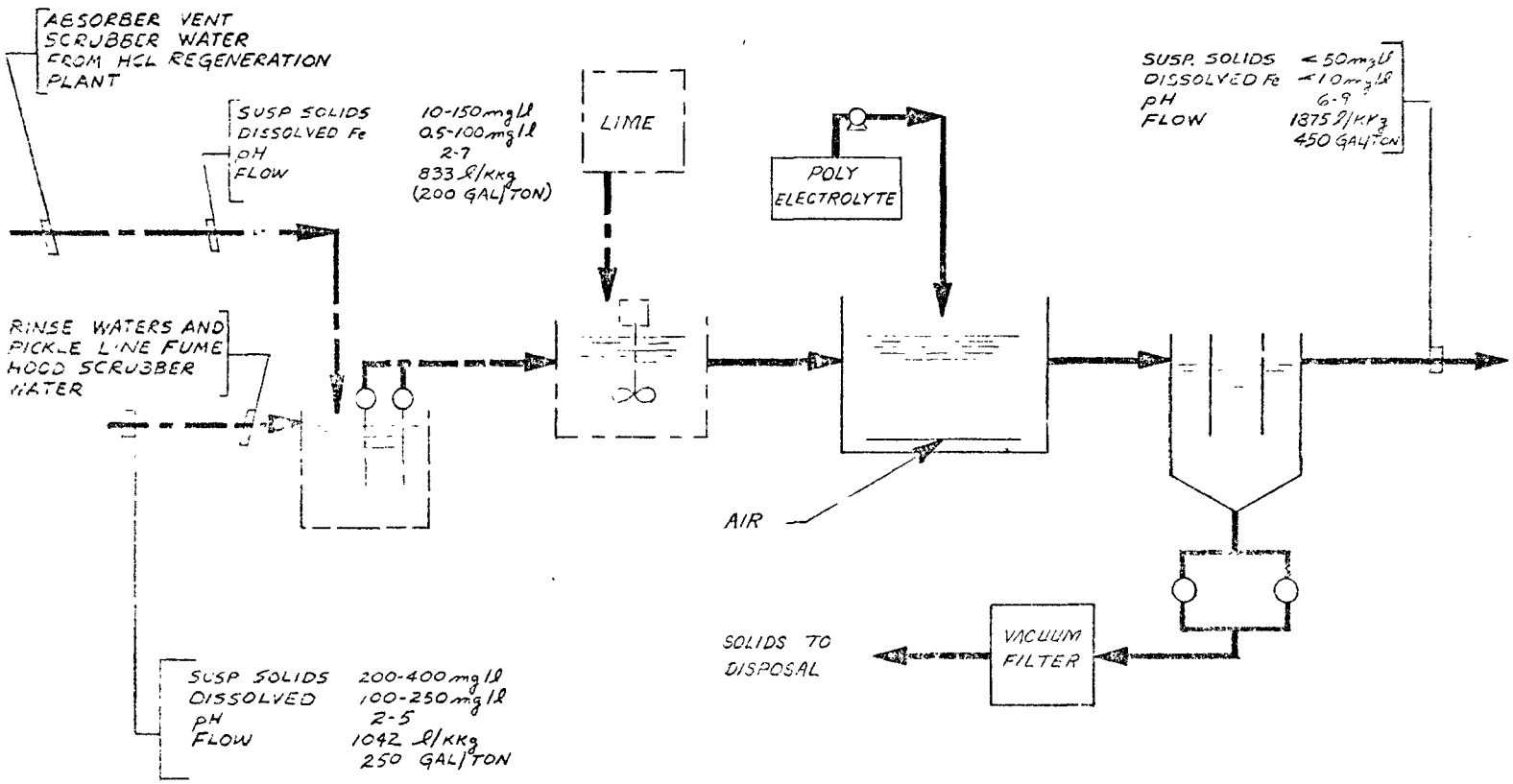

REFERENCE LEVEL SYSTEM
BPCTCA MODEL

ENVIRONMENTAL PROTECTION AGENCY
STEEL INDUSTRY STUDY
PICKLING/HCL RINSE ALTERNATE I
SUBCATEGORY
BPCTCA MODEL

REV. 11-20-74 5-12-75	FIGURE 82

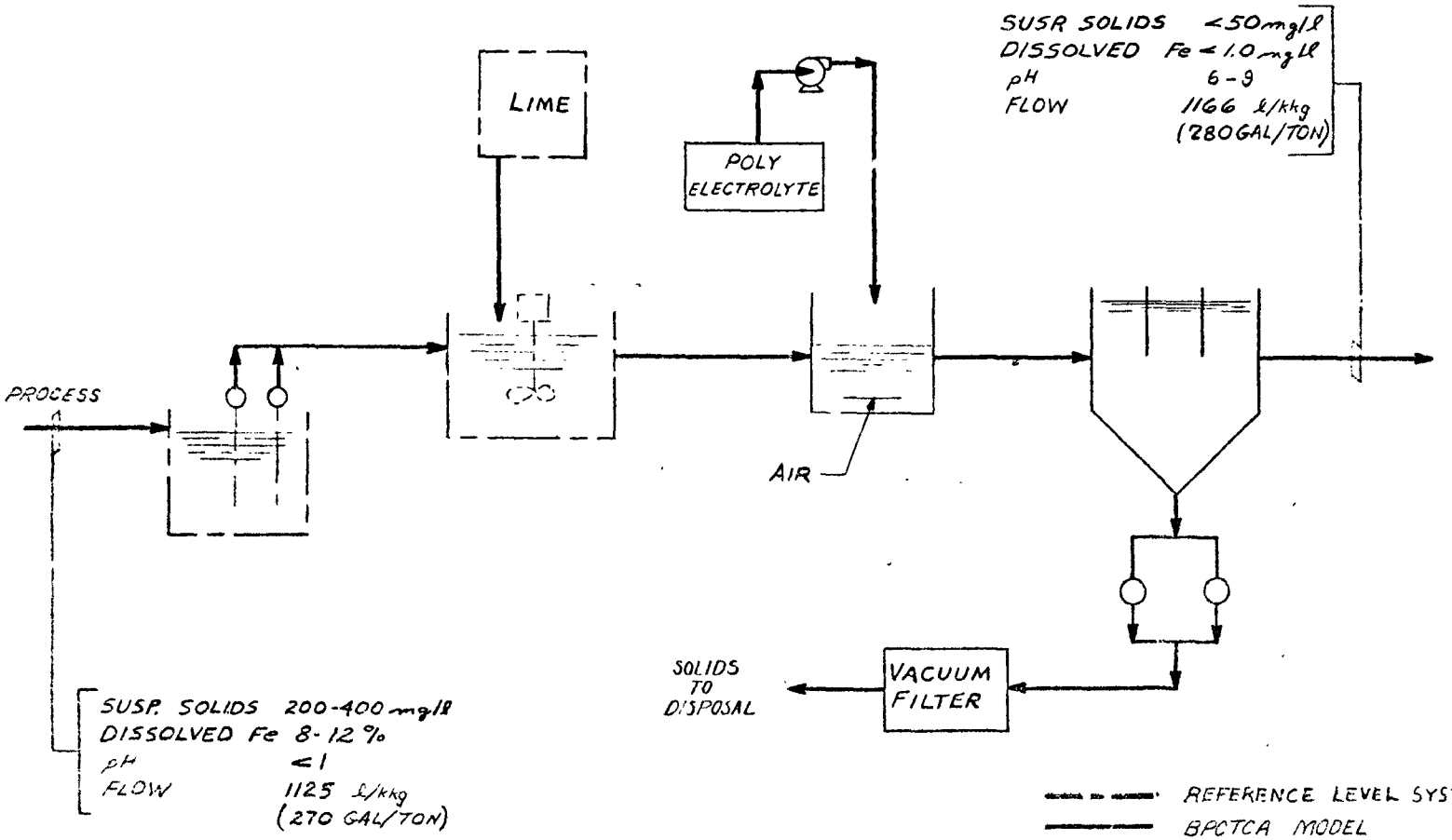

ENVIRONMENTAL PROTECTION AGENCY
STEEL INDUSTRY STUDY
PICKLING - HCL - CONCENTRATES & RINSES
ALT. II SUBCATEGORY
BPCTCA MODEL

11-20-74
REV. 5-22-75

FIGURE 83

TABLE 85

BPCTCA - EFFLUENT LIMITATIONS GUIDELINES

SUBCATEGORY Pickling - Hydrochloric Acid - ABS Vent Scrubber

CRITICAL PARAMETERS	BPCTCA LIMITATIONS Kg/KKg (1) (LB/1000 LB)	BPCTCA LIMITATIONS mg/l (2)	CONTROL & TREATMENT TECHNOLOGY (3)	ESTIMATED (4) TOTAL COST $/KKg	ESTIMATED (4) TOTAL COST $/TON
Suspended Solids	0.0417	50	Onsite acid regeneration plant; aeration lime neutralization, sedimentation for HCl absorber scrubber wastes.	(-1.047)	(-0.952)
Oil and Grease (5)	0.0083	10	pH neutralization		
Dissolved Iron	0.00083	1			
pH	6.0 - 9.0				
Flow	Most probable value is 833 liters of effluent per kkg of product (200 gal/ton); excluding all non-contact cooling water.				

(1) Kilograms per metric ton of steel pickled or pounds per 1000 pounds of steel pickled.
(2) Milligrams per liter based on 833 liters effluent per kkg of steel pickled (200 gal/ton).
(3) Available technology listed is not necessarily all inclusive nor does it reflect all possible combinations or permutations of treatment methods.
(4) Costs may vary some depending on such factors as location, availability of land and chemicals, flow to be treated, treatment technology selected where competing alternatives exist, and extent of preliminary modifications required to accept the indicated control and treatment devices. Estimated total costs shown are only incremental costs required above those facilities which are normally existing within a plant.
(5) This load is allowed only when these wastes are treated in combination with cold rolling mill wastes.

TABLE 87

BPCTCA - EFFLUENT LIMITATIONS GUIDELINES

SUBCATEGORY Pickling - Hydrochloric Acid - Concentrates and Rinses (1)

CRITICAL PARAMETERS	BPCTCA LIMITATIONS Kg/KKg (LB/1000 LB) (2)	BPCTCA LIMITATIONS mg/l (3)	CONTROL & TREATMENT TECHNOLOGY (4)	ESTIMATED (5) TOTAL COST $/KKg	ESTIMATED (5) TOTAL COST $/TON
Suspended Solids	0.048 0.0104 (6)	50	Equalization of acid & alkaline wastes. Blending, mixing & aeration. Treatment with lime or caustic soda with polymer addition. Sedimentation in a thickener; vacuum filtration of underflow.	0.762	0.693
Oil and Grease (7)	0.0096 0.0021 (6)	10			
Dissolved Iron	0.00096 0.00021 (6)	1			
pH	6.0-9.0		pH neutralization		
Flow	Most probable value is 959 liters of effluent per kkg of product (230 gal/ton); excluding all non-contact cooling water.				

(1) Effluent limitations which are indicated are the sum of the individual limitations for Concentrate Subcategories and Rinse Subcategories.

(2) Kilograms per metric ton of steel pickled or pounds per 1000 pounds of steel pickled.

(3) Milligrams per liter based on 959 liters effluent per kkg of steel pickled (230 gal/ton).

(4) Available technology listed is not necessarily all inclusive nor does it reflect all possible combinations or permutations of treatment methods.

(5) Costs may vary some depending on such factors as location, availability of land and chemicals, flow to be treated, treatment technology selected where competing alternatives exist, and extent of preliminary modifications required to accept the indicated control and treatment devices. Estimated total costs shown are only incremental costs required above those facilities which are normally existing within a plant.

(6) This limitation allowed in addition if the pickle line has a fume hood scrubber. Most probable value is 209 liters of effluent per kkg of product (50 gal/ton).

(7) This load is allowed only when these wastes are treated in combination with cold rolling mill wastes.

pickle baths to treatment and ultimate disposal off-site, where they may be blended with alkaline wastes from other industrial sources. Two plants of this type were surveyed, and these were either neutralizing to a level acceptable to the municipal sanitary authority, or were using contract hauling services to dispose of spent concentrates. Technology for treatment of spent concentrates from batch hydrochloric acid pickling does exist, however, and is discussed more fully under the individual pollutant parameters which follow. In most instances, it is more practical to treat spent concentrates jointly with rinses in one unified treatment system.

Continuous Pickling Operations. Plants utilizing hydrochloric acid for continuous pickling, primarily sheet and strip lines, are relatively new when contrasted with continuous sulfuric acid pickling lines. As a result, they practice more modern control and treatment technology than their sulfuric acid counterparts. Emphasis is placed on recovery of reusable hydrochloric acid from all spent pickling concentrated solutions. Typical lines run at high production rates, on the order of 1,270 to 5,440 kkg (1,400 to 6,000 tons) per day, with an average production near 2,720 kkg (3,000 tons) per day. Many plants operate more than one line at a given location. Spent concentrates are generated at a typical rate of 42 to 65 l/kkg (10 to 15 gal./ton).

The three continuous HCl regeneration systems surveyed are using the same basic acid recovery process. Spent acid is evaporated in a gas-fired roaster. Iron oxide is removed from the bottom of the roaster while HCl vapors pass on to an absorber where they are converted into reusable acid. The inert combustion products pass through the absorber to a final water scrubber for removal of any residual HCl vapor and fine particulates prior to venting to atmosphere. The vent scrubber discharge is the only liquid waste from the acid recovery system, averaging approximately 830 l/kkg (200 gal./ton) in flow rate. For those hydrochloric acid pickling operations not practicing acid regeneration, treatment alternatives for spent concentrates ranged from deep well disposal to carefully controlled lime neutralization, jointly with the more dilute acidic rinse waters. Of the seven continuous HCl pickling operations surveyed, three were regenerating their spent acids, two were practicing deep well disposal, one was using contract hauling disposal services, and one was blending concentrates and rinse waters prior to treatment via aeration, lime neutralization, polymer addition, clarification via a thickener, with vacuum filtration of thickener underflows

and discharge of a clear, neutral, iron-free effluent. Individual recommendations for each critical parameter follow, and are summarized in Table 85.

Suspended Solids. For those plants utilizing HCl regeneration systems, a BPCTCA limitation of 0.0417 kg/kkg (0.0834 lbs of solids per ton) of steel pickled is recommended, equivalent to 50 mg/l based on an absorber vent scrubber water flow of 834 l/kkg (200 gal./ton). All spent concentrated HCl pickle liquors are regenerated in the acid recovery unit; all iron is converted to oxides for reuse in the steelmaking processes. The only contaminants remaining in the gas stream and, consequently, in the absorber vent scrubber effluent are residual hydrochloric acid vapors and fine particulates, including extremely fine iron oxide particles and other inert combustion products. All three of the plants surveyed are equipped with cyclone separators to remove the oxide dust from the HCl gas stream prior to the HCl absorber. An additional unit at one of the plants is equipped with an electrostatic precipitator. The effect of these dust collectors is quite noticeable in the final scrubber discharge water which contained from 70 to 130 ppm of suspended matter for those units equipped with cyclones and only 7 mg/l suspended matter for the unit with the electrostatic precipitator.

At present, most plants discharge their absorber vent scrubber waters once-through with no treatment. The plant using an electrostatic precipitator achieves solids loads low enough to meet the BPCTCA limit, but the other plants would require a short-term sedimentation pond to reduce solids loads to the recommended levels. Since these scrubber wastes are often acidic enough to require lime neutralization particularly if the HCl absorbers are operated inefficiently allowing residual acid vapors to pass on to the final scrubber at too high a rate, a sedimentation pond would be required to settle out iron precipitates prior to discharge.

For those plants not practicing acid regeneration, the recommended BPCTCA limitations are based on joint treatment of spent concentrates and rinse waters and are summarized in Table 87. The total suspended solids effluent loads for concentrates and rinses together are limit to 0.0480 kg/kkg (0.0960 lbs/ton) of steel pickled, equivalent to 50 mg/l based on a combined flow of 959 l/kkg (230 gal./ton) of product. For those plants using wet scrubbers for control of fumes in hoods over the pickling tanks, an additional allowance of 0.0104 kg/kkg (0.0208 lbs/ton) of steel pickled is provided, equivalent to 50 mg/l based on a fume hood

scrubber flow of 209 l/kkg (50 gal./ton) of product. The one continuous pickling operation surveyed which was practicing joint treatment of spent concentrates and rinses was attaining an effluent suspended solids load equivalent to only 43% of the BPCTCA limit.

Dissolved Iron. For those plants utilizing regeneration systems, a BPCTCA limitation of 0.00083 kg/kkg (0.00167 lbs of dissolved iron per ton) of steel pickled is recommended, equivalent to 1 mg/l, based on an absorber vent scrubber effluent flow of 834 l/kkg (200 gal./ton) of steel pickled. Most of the iron carried through either of the dust collection systems is in the particulate form. Unless the HCl absorber is functioning inefficiently, it will remain undissolved, contributing little or nothing to the dissolved iron loads. However, neutralization with lime or other alkali, plus sedimentation will be necessary to prevent discharge of excessive dissolved iron during those times when high concentrations of HCl vapors pass out of the absorber. For the plants surveyed, dissolved iron loadings were at 10 to 75% of the limit at pH 7 or above, but were as high as 18 times over the BPCTCA limit as pH levels decreased to pH 2 or lower.

For those plants not generating spent HCl concentrates, the recommended limitations for joint treatment systems handling concentrates and rinses allow a total dissolved iron load of 0.00096 kg/kkg (0.00192 lbs/ton) of steel pickled, equivalent to 1 mg/l, based on a total combined flow of 959 l/kkg (230 gal./ton) of product. An additional allowance of 0.00021 kg/kkg (0.00042 lbs/ton) is provided for those plants using wet fume hood scrubbers in conjunction with pickling operations. The plant practicing joint treatment of rinses and concentrates achieves a dissolved iron loading of only 0.000317 lbs/ton, equivalent to less than 15% of its permitted loading.

pH. As in all other subcategories, the BPCTCA ELG for pH is the range 6.0 to 9.0. Since treatment with alkalies will be necessary to achieve the BPCTCA dissolved iron limitations, the attainment of the pH limitations will not require any additional equipment or expense.

Pickling - Hydrochloric Acid - Batch and Continuous - Rinses

A total of nine hydrochloric acid pickling plants were examined for rinse water quality during the survey, and six of these were large tonnage strip and sheet mills. Of the nine operations, three were presently providing no rinse water treatment; attain some concentration reductions

through partial neutralization or dilution; two treat rinse waters effectively using conventional lime treatment and sedimentation/clarification; and the remaining plant cascades dilute rinse waters toward the head end of the pickling line, thereby concentrating iron and acid levels until the rinse waters resemble dilute (1-2%) spent acid concentrated solutions. At present, this plant injects this waste and the spent concentrate to a deep well, but this mixture is amenable to acid recovery by systems described previously in the sections on Pickling - Hydrochloric Acid - Concentrates. Following is a summary of factors used to establish the BPCTCA Effluent Limitations Guidelines as they apply to rinse waters. They are presented in Table 86.

Suspended Solids. For pickling installations treating rinse waters separately, either because they operate regeneration or separate treatment of concentrates, a BPCTCA limitation of 0.0417 kg/kkg (0.0834 lbs of suspended solids per ton) of steel pickled is recommended, equivalent to 50 mg/l based on a rinse water flow rate of 833 l/kkg (200 gal./ton) of steel pickled. An additional allowance of 0.0104 kg/kkg (0.0208 lbs/ton), equivalent to 50 mg/l based on a flow of 209 l/kkg (50 gal./ton) is provided for pickling lines equipped with wet fume hood scrubbers. Seven plants are attaining this limit, including those that are depending on dilution alone. The average solids load discharged by these plants was less than 40% of the basic allowance above. The typical treatment sequence would include equalization, lime addition, mixing, aeration, polymer addition, and sedimentation in a thickener with vacuum filtration of underflow sludges.

For pickling operations treating spent concentrates and rinse waters jointly, the BPCTCA limitations were discussed previously in the sections on Pickling - Hydrochloric Acid - Concentrates.

Dissolved Iron. For pickling operations treating rinse waters separately, a BPCTCA limitation of 0.00083 kg/kkg (0.00167 lbs of dissolved iron per ton) of steel is recommended, equivalent to 1 mg/l based on a rinse water flow rate of 833 l/kkg (200 gal./ton) of steel pickled. An additional allowance of 0.00021 kg/kkg (0.00042 lbs/ton), equivalent to 1 mg/l based on a flow of 209 l/kkg (50 gal./ton) is provided for pickling lines equipped with wet fume hood scrubbers. Only three of the plants surveyed attain dissolved iron levels significantly below this limit, but the plants that fail to are not controlling their neutralization steps adequately. The sequence of treatments described above for suspended solids removal succeeds in

TABLE 86

BPCTCA - EFFLUENT LIMITATIONS GUIDELINES

SUBCATEGORY Pickling - Hydrochloric Acid - Rinses

CRITICAL PARAMETERS	BPCTCA LIMITATIONS Kg/KKg[1] (LB/1000 LB)	BPCTCA LIMITATIONS mg/l[2]	CONTROL & TREATMENT TECHNOLOGY[3]	ESTIMATED[4] TOTAL COST $/KKg	ESTIMATED[4] TOTAL COST $/TON
Suspended Solids	0.0417 0.0104[5]	50	Equalization of acid and alkaline wastes. Blending, mixing & aeration. Lime treatment with polymer addition. Sedimentation in a thickener, with vacuum filtration of underflow.	0.153	0.139
Oil and Grease[6]	0.0083 0.0021[5]	10			
Dissolved Iron	0.00083 0.00021[5]	1			
pH	6.0 - 9.0		pH neutralization		
Flow	Most probable value is 833 liters of effluent per kkg of product (200 gal/ton), excluding all non-contact cooling water.				

(1) Kilograms per metric ton of steel pickled or pounds per 1000 pounds of steel pickled.
(2) Milligrams per liter based on 833 liters effluent per kkg of steel pickled (200 gal/ton).
(3) Available technology listed is not necessarily all inclusive nor does it reflect all possible combinations or permutations of treatment methods.
(4) Costs may vary some depending on such factors as location, availability of land and chemicals, flow to be treated, treatment technology selected where competing alternatives exist, and extent of preliminary modifications required to accept the indicated control and treatment devices. Estimated total costs shown are only incremental costs required above those facilities which are normally existing within a plant.
(5) This limitation allowed in addition if the pickle line has a fume hood scrubber. Most probable value is 209 liters of effluent per kkg of product (50 gal/ton).
(6) This load is allowed only when these wastes are treated in combination with cold rolling mill wastes.

meeting the recommended limitation for dissolved iron when carefully practiced.

For pickling operations practicing joint treatment of spent concentrates and rinses, the BPCTCA limitations on dissolved iron were discussed previously in the sections on Pickling - Hydrochloric Acid - Concentrates.

pH. As in all other subcategories, the BPCTCA ELG for pH is the range 6.0 to 9.0. Since treatment with alkalies is required to achieve the BPCTCA dissolved iron limitations, the attainment of the pH limitations will not require any additional equipment or expense.

Oil and Grease. Several plants have found it advantageous to treat pickling rinse waters jointly with cold rolling mill wastewaters utilizing the acidity and dissolved iron content of the former to assist in emulsion breaking and clarification/flocculation of the latter. The BPCTCA limitation for oil and grease from such treatment operations is set at 0.0083 kg/kkg (0.0167 lbs/ton), equivalent to 10 mg/l, based on a flow rate of 833 l/kkg (200 gal./ton) of product. The one plant surveyed practicing such joint treatment was discharging oil and grease at 65% of the recommended limitation. For plants treating spent concentrates and rinse waters from pickling jointly with cold rolling mill wastes, the BPCTCA limitations are set at 0.0095 kg/kkg (0.0190 lbs/ton), equivalent to 10 mg/l based on a combined flow rate of 959 l/kkg (230 gal./ton) of product.

Cold Rolling Subcategories

Waste treatment practices in cold rolling operations center primarily on the removal of oils and suspended solids. Most mills have gone to recycle systems, at least on some stands, on their rolling solutions primarily due to the high cost of rolling oils as well as to meet increasingly tighter pollution control requirements.

Recirculation Systems. Four of the five mills sampled had recirculation systems. Spent rolling oils are pumped to a separate storage tank and metered into an oil separator along with oily wastewater (spillage, pump leakage, etc.) from the oil cellar and machine shop, associated with the cold mill operation. Discharges from these plants ranged from 67 l/kkg to 760 l/kkg (16 to 182 gal./ton) of product rolled. The volume of discharge per ton of product rolled is highly dependent upon the width, thickness, and type of a product, the speed of the rolling mill, the condition of the

rolls and wipers, and will vary considerably on different days for the same mill, depending on the product rolled. In spite of the wide variation in flows shown above, three of the four plants achieved average discharge rates between 67 and 75 l/kkg (16 and 18 gal./ton), and 4 to 6 mg/l of oil and grease was readily attained in the treatment plant effluent, partly due to the dilution effect caused by treating cold rolling mill wastewaters in a central treatment plant along with wastewaters from other processes.

The BPCTCA ELGs are presented in Table 88, and are discussed individually below:

Suspended Solids. Four plants surveyed were operating all rolling stands using tight recycle systems, and were discharging suspended solids in their treated effluents ranging from 2 to 22 mg/l. In all cases, small volumes of rolling mill waste are mixed with large volumes of other wastewaters whose characteristics are predominant and overshadow the rolling mill waste. Taking into account this dilution and realizing the load will vary considerably according to the mill, the BPCTCA limitation for suspended solids from recirculation systems has been established as 0.0026 kg/kkg (0.0052 lbs of suspended solids per ton) of steel rolled, equivalent to 25 mg/l at 104 l/kkg (25 gal./ton). Three of the four plants surveyed are operating within this load limitation at the present time.

Oil and Grease. The four plants surveyed were discharging oil concentrations in the treatment plant effluents from 4 to 6 mg/l. In all cases, dilution by large volumes of other wastewaters being treated in the same central treatment plant overshadowed the impact effect of the rolling mill waste discharge. These concentrations are also too low to be accurately measured by the most readily available analytical techniques for oil content. The BPCTCA ELG for oil and grease from recirculation systems has, therefore, been set at 0.00104 kg/kkg (0.00206 lbs of oil per ton) of steel, equivalent to 10 mg/l based on a discharge flow of 104 l/kkg (25 gal./ton). Two of the four plants surveyed are operating within this load limitation currently, and three out of four reach concentration less than 10 mg/l, indicating that the treatment technology is available to maintain that level.

Dissolved Iron. For those cold rolling - recirculation plants treating their wastewaters jointly with those from pickling operations, a BPCTCA dissolved iron limitation has been set at 0.000104 kg/kkg (0.000208 lbs/ton), equivalent to 1 mg/l at a flow of 104 l/kkg (25 gal./ton) of steel

TABLE 88

BPCTCA - EFFLUENT LIMITATIONS GUIDELINES

SUBCATEGORY Cold Rolling - Recirculation

CRITICAL PARAMETERS	BPCTCA LIMITATIONS Kg/KKg[1] (LB/1000 LB)	BPCTCA LIMITATIONS mg/l[2]	CONTROL & TREATMENT TECHNOLOGY[3]	ESTIMATED[4] TOTAL COST $/KKg	ESTIMATED[4] TOTAL COST $/TON
Suspended Solids	0.0026	25	Reuse of rolling solutions with treatment of minimum blowdown via oil separation, equalization, chemical treatment, flocculation, air flotation, surface skimming and extended settling.	0.065	0.059
Oil and Grease	0.00104	10			
Dissolved Iron[5]	0.000104	1			
pH	6.0-9.0		pH neutralization		
Flow	Most probable value for effluents from system is 104 liters per kkg of steel rolled (25 gal/ton); excluding all non-contact cooling water.				

(1) Kilograms per metric ton of steel rolled or pounds per 1000 pounds of steel rolled.
(2) Milligrams/liter, based on 104 liters effluent per kkg of steel rolled (25 gal/ton).
(3) Available technology listed is not necessarily all inclusive nor does it reflect all possible combinations or permutations of treatment methods.
(4) Costs may vary depending on such factors as location, availability of land and chemicals, flow to be treated, treatment technology selected where competing alternatives exist, and extent of preliminary modifications required to accept the indicated control and treatment devices. Estimated total costs shown are only incremental costs required above those facilities which are normally existing within a plant.
(5) This load is allowed only when these wastes are treated in combination with pickle line rinse wastewaters.

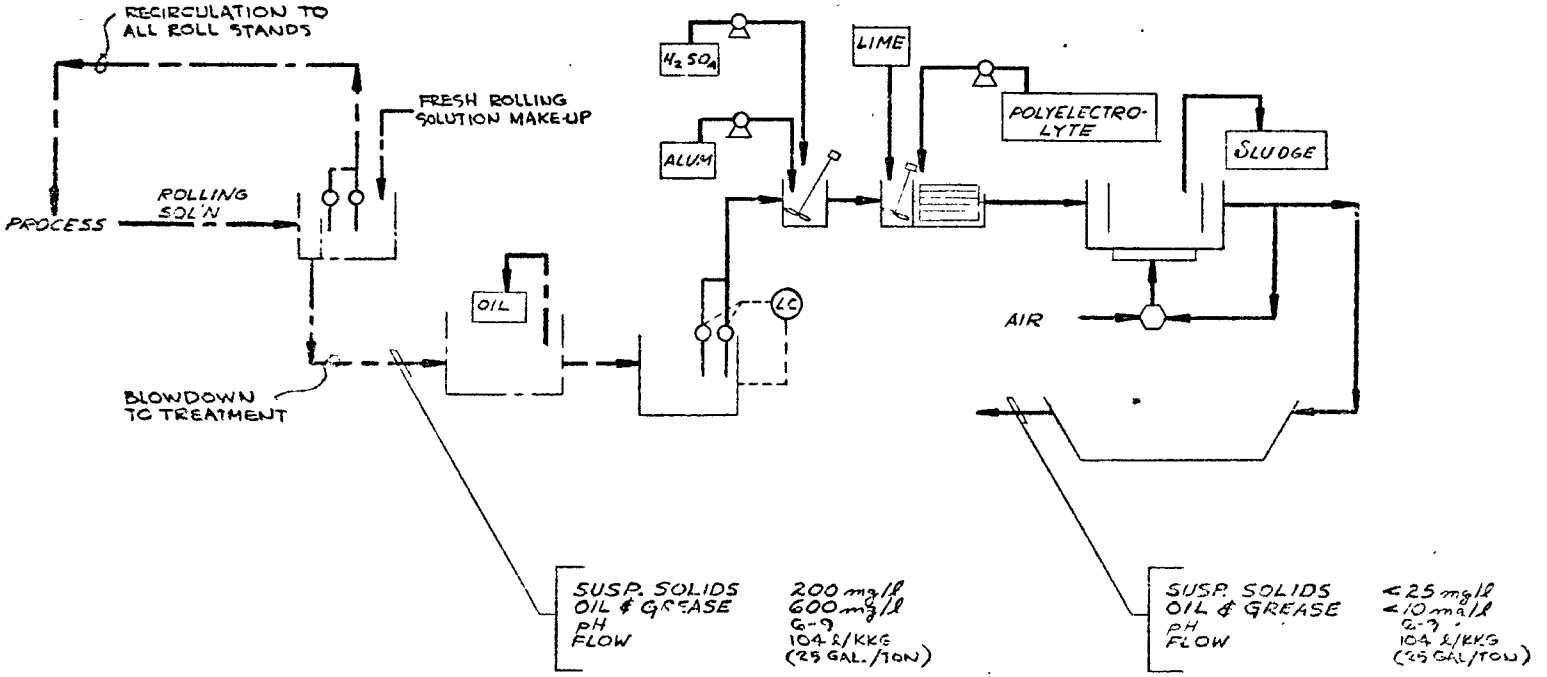

——— REFERENCE LEVEL SYSTEM
——— BPCTCA MODEL

ENVIRONMENTAL PROTECTION AGENCY STEEL INDUSTRY STUDY COLD ROLLING - RECIRCULATION SUBCATEGORY BPCTCA MODEL	
11-22-74 REV. 5-22-75	FIGURE 84

produced. Data were available from two such plants, indicating an average dissolved iron concentration of 0.1 mg/l after treatment.

Combination Systems. Although recent trends in cold rolling practice have aimed at increased use of recirculation systems wherever possibly, many plants must continue to run one or more stands on a once-through basis. This need is dictated by special customer requirements, control of dissolved solids, or the need to remove a previously applied oily coating which may be incompatible with the rolling solutions used. Plants using such a combination of recirculation and direct application stands generate considerably more wastewater than recirculation alone. For example, the one combination plant visited on two different occasions during this survey consisted of two different cold rolling lines and a temper mill using various combinations of recirculation and direct application, with wastewater flows averaging 1551 l/kkg (372 gal/ton) at the time of the visits. Data reported by this plant for a representative period of operations confirmed the above average, indicating a 28-day average flow of 1,530 l/kkg (367 gal./ton) to treatment. For this reason, the BPCTCA ELGs for combination cold rolling operations has been based on flow rates of 1,668 l/kkg (400 gal./ton) of steel produced.

The BPCTCA ELGs for the cold rolling - combination plants are presented in Table 89, and discussed individually below.

Suspended Solids. During the plant visits the one cold rolling - combination plant surveyed was discharging 6 to 10 mg/l of suspended solids after treatment via oil skimming, equalization, emulsion breaking, air flotation, and chemical treatment at a central treatment plant together with coating wastewaters. The BPCTCA limitation for suspended solids from cold rolling - combination plants has been established at 0.0417 kg/kkg (0.0834 lbs/ton) of steel rolled, equivalent to 25 mg/l at a flow of 1,668 l/kkg (400 gal./ton). The plant surveyed is currently averaging 28% of this load.

Oil and Grease. During the plant surveys, oil concentrations after treatment ranged between 4 and 20 mg/l, and averaged 12 mg/l. The BPCTCA limitations for oil and grease from cold rolling - combination operations has been set at 0.0167 kg/kkg (0.0334 lbs/ton) of steel rolled, equivalent to 10 mg/l at a flow of 1,668 l/kkg (400 gal./ton). The plant surveyed was discharging an average load slightly exceeding this value, but sampling records indicate that a short-term upset occurred during one of five

TABLE 89

BPCTCA - EFFLUENT LIMITATIONS GUIDELINES

SUBCATEGORY Cold Rolling - Combination

CRITICAL PARAMETERS	BPCTCA LIMITATIONS Kg/KKg[1] (LB/1000 LB)	BPCTCA LIMITATIONS mg/l[2]	CONTROL & TREATMENT TECHNOLOGY[3]	ESTIMATED[4] TOTAL COST $/KKg	ESTIMATED[4] TOTAL COST $/TON
Suspended Solids	0.0417	25	Maximum degree of reuse practical, with treatment of blowdown from the recirculation system and water from direct application stands via oil separation, equalization, chemical treatment, flocculation, air flotation, surface skimming, and extended settling.	0.657	0.598
Oil and Grease	0.0167	10			
Dissolved Iron[5]	0.00167	1			
pH	6.0 - 9.0		pH neutralization		
Flow	Most probable value for effluents from system is 1668 liters per kkg of steel rolled (400 gal/ton); excluding all non-contact cooling water.				

(1) Kilograms per metric ton of steel rolled or pounds per 1000 pounds of steel rolled.
(2) Milligrams/liter, based on 1668 liters effluent per kkg of steel rolled (400 gal/ton).
(3) Available technology listed is not necessarily all inclusive nor does it reflect all possible combinations or permutations of treatment methods.
(4) Costs may vary depending on such factors as location, availability of land and chemicals, flow to be treated, treatment technology selected where competing alternatives exist, and extent of preliminary modifications required to accept the indicated control and treatment devices. Estimated total costs shown are only incremental costs required above those facilities which are normally existing within a plant.
(5) This load is allowed only when these wastes are treated in combination with pickle line rinse wastewaters.

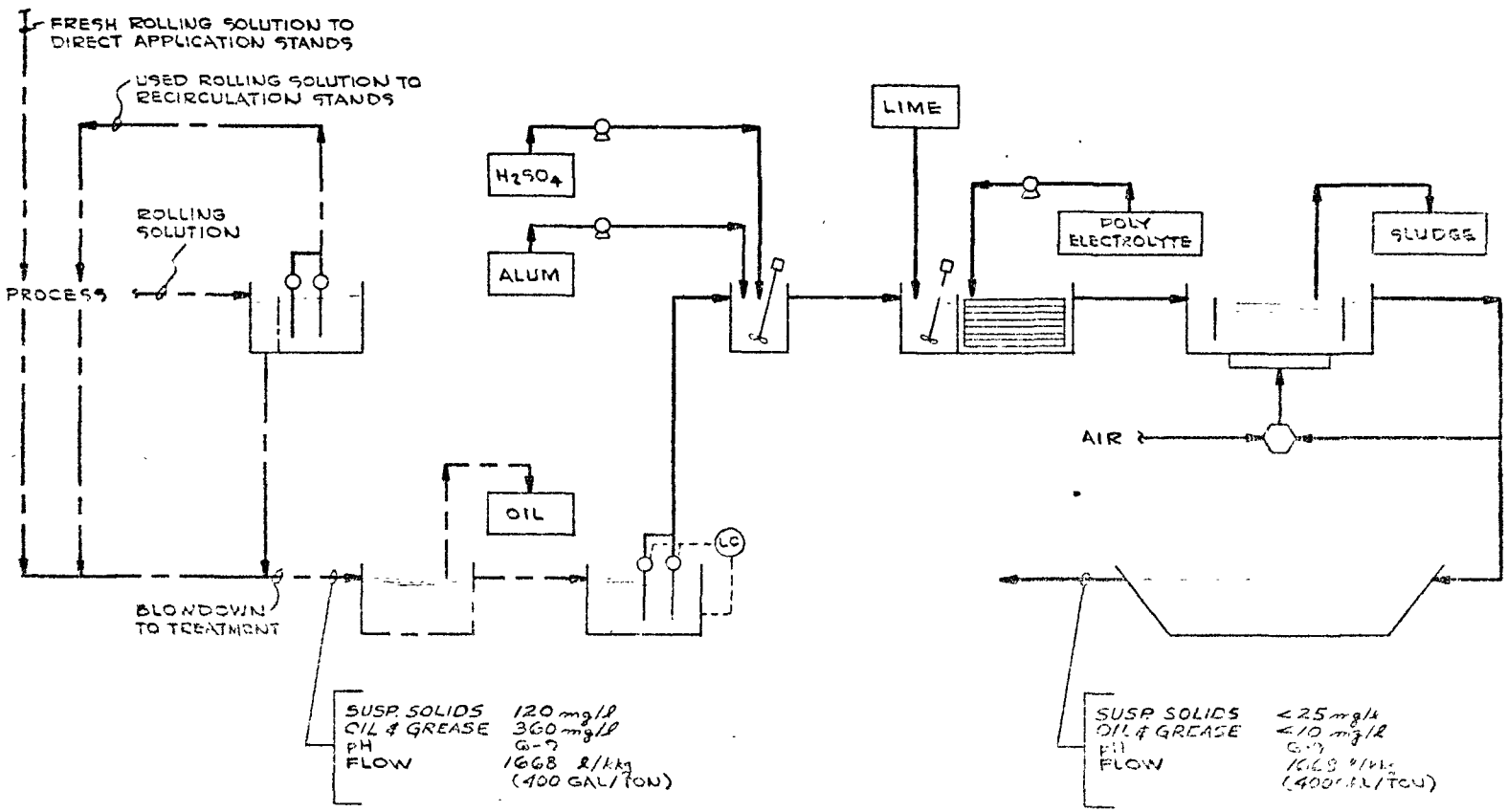

——— REFERENCE LEVEL SYSTEM

——— BPCTCA MODEL

ENVIRONMENTAL PROTECTION AGENCY STEEL INDUSTRY STUDY COLD ROLLING - COMBINATION SUBCATEGORY BPCTCA MODEL	
11-22-71 REV. 5-22-72	FIGURE 65

sampling shifts, which yielded a higher than normal concentration for that period, but still well within the maximum daily limit. The plant effluent reverted to normal within a few hours, and the average concentration for the subsequent shift was below 10 mg/l.

Dissolved Iron. For those cold rolling - combination plants treating their wastewaters jointly with those from pickling operations, a BPCTCA dissolved iron limitation has been set at 0.00167 kg/kkg (0.0034 lbs/ton), equivalent to 1 mg/l at a flow of 1,668 l/kkg (400 gal./ton) of steel rolled. No dissolved iron data was collected during the survey of the one plant treating cold rolling and coating (including light pickling) wastes jointly, but even total iron averaged less than 1 mg/l.

Direct Application Systems. A few cold rolling installations will continue to operate without recirculation on any rolling stand, providing only once-through direct application of rolling solutions. Although no plants of this type were surveyed, a review of the application rates utilized by the recirculation and combination types of operation in the cold rolling subcategory indicate a typical water requirement of approximately 4,170 l/kkg (1,000 gal./ton) of product rolled. Thus this flow, together with the treatment technology utilized on the other cold rolling wastewaters (namely, equalization, chemical treatment, flocculation, dissolved air flotation, surface skimming and long-term settling) form a basis for BPCTCA ELGs for direct application plants. The individual limitations are discussed below, and are summarized in Table 90.

Suspended Solids. The recommended BPCTCA limitation for suspended solids from direct application systems has been set at 0.1042 kg/kkg (0.2084 lbs/ton) of steel produced, equivalent to 25 mg/l, based on a total discharge flow of 4,170 l/kkg (1,000 gal./ton). Although no plants utilizing direct application on all stands were surveyed, and thus no treatment data was available, the technology required to attain these limitations has been adequately demonstrated on the other cold rolling systems, as discussed above.

Oil and Grease. The recommended BPCTCA limitations for oil and grease from direct application systems has been set at 0.0417 kg/kkg (0.0834 lbs/ton) of steel produced, equivalent to 10 mg/l at a flow of 4,170 l/kkg (1,000 gal./ton). Again, despite the non-availability of data, the technology has been adequately demonstrated by treatment systems handling cold rolling wastewaters using the other two solution systems.

TABLE 90

BPCTCA - EFFLUENT LIMITATIONS GUIDELINES

SUBCATEGORY Cold Rolling - Direct Application

CRITICAL PARAMETERS	BPCTCA LIMITATIONS Kg/KKg[1] (LB/1000 LB)	BPCTCA LIMITATIONS mg/l[2]	CONTROL & TREATMENT TECHNOLOGY[3]	ESTIMATED[4] TOTAL COST $/KKg	ESTIMATED[4] TOTAL COST $/TON
Suspended Solids	0.1042	25	Treatment of solutions via oil separation, equalization, chemical treatment, flocculation, air flotation, surface skimming, and long term settling.	1.238	1.125
Oil and Grease	0.0417	10			
Dissolved Iron[5]	0.0042	1			
pH	6.0-9.0		pH neutralization		
Flow	Most probable value for effluents from system is 4170 liters per kkg of steel rolled (1000 gal/ton); excluding all non-contact cooling water.				

(1) Kilograms per metric ton of steel rolled or pounds per 1000 pounds of steel rolled.
(2) Milligrams/liter, based on 4170 liters effluent per kkg of steel rolled (1000 gal/ton).
(3) Available technology listed is not necessarily all inclusive nor does it reflect all possible combinations or permutations of treatment methods.
(4) Costs may vary depending on such factors as location, availability of land and chemicals, flow to be treated, treatment technology selected where competing alternatives exist, and extent of preliminary modifications required to accept the indicated control and treatment devices. Estimated total costs shown are only incremental costs required above those facilities which are normally existing within a plant.
(5) This load is allowed only when these wastes are treated in combination with pickle line rinse wastewater.

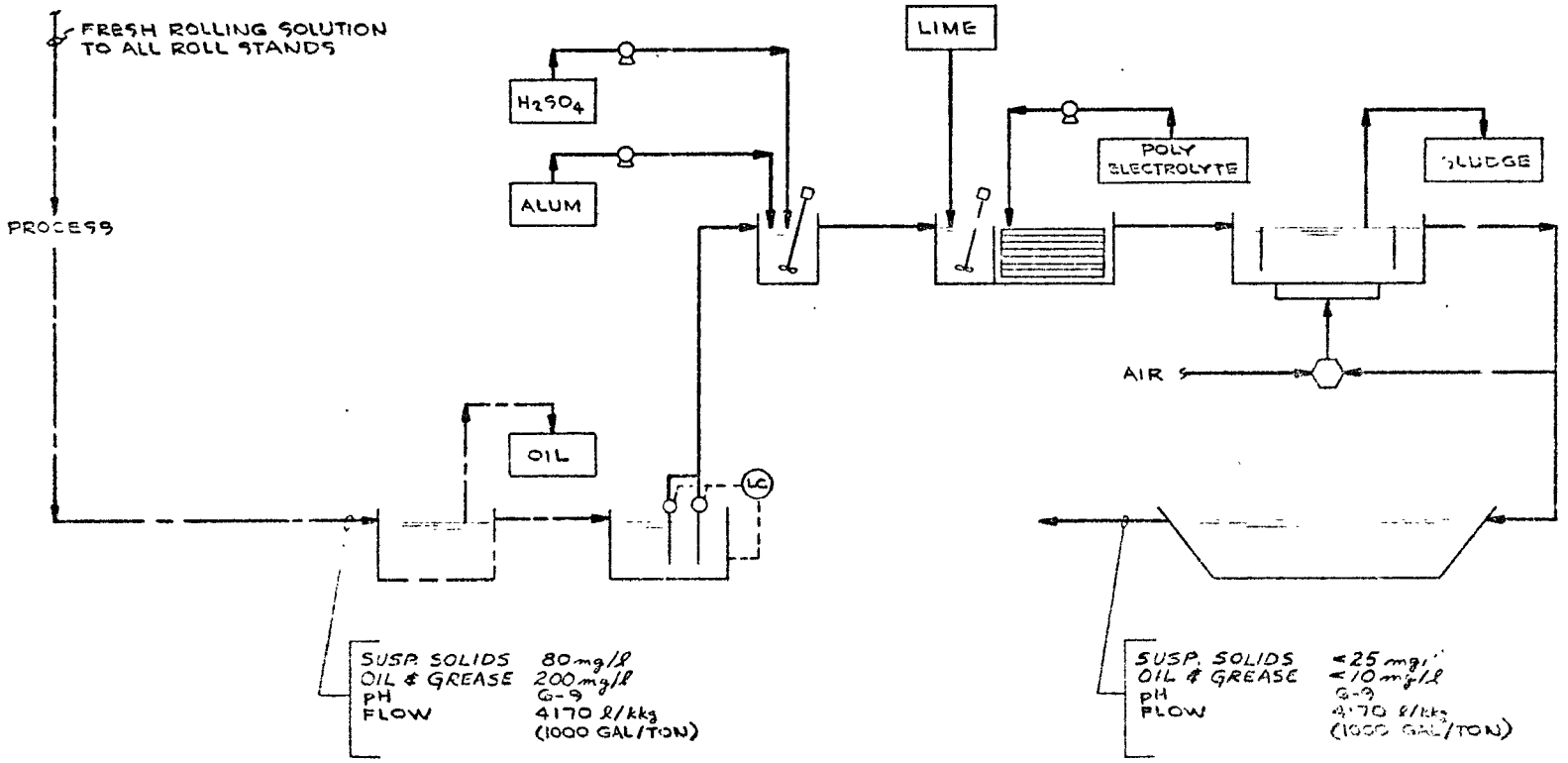

——— REFERENCE LEVEL SYSTEM
——— BPCTCA MODEL

ENVIRONMENTAL PROTECTION AGENCY
STEEL INDUSTRY STUDY
COLD ROLLING - DIRECT APPLICATION SUBCATEGORY
BPCTCA MODEL

11-22-74
REV. 5-22-75

FIGURE 86

Dissolved Iron. For those cold rolling - direct application plants treating their wastewaters jointly with those from pickling operations, a BPCTCA dissolved iron limitation has been set at 0.0042 kg/kkg (0.0084 lbs/ton) of steel produced, equivalent to 1 mg/l at a flow of 4,170 l/kkg (1,000 gal./ton) of product.

Hot Coatings - Galvanizing Operations

Four plants in the hot coatings subcategory were visited. Two of these were rod and wire mills producing galvanized wire, but one had no process wastewaters in contact with the coated product and, consequently, no raw waste load attributable to the coating step. Waste loads from the rod mill and the pickling operations associated with this production line are covered under the hot forming section and the pickling - hydrochloric acid subcategories.

The remaining three mills included two large continuous strip galvanizing operations and (including one running three coating lines side by side) one continuous wire galvanizing operation. Wastewater flow rates for these three lines ranged from 557 to 2,195 gal./ton for the strip galvanizing lines, to 4,600 gal./ton for the wire mill. All lines included varying portions of noncontact cooling water from furnace cooling and from temperature control of the molten metal baths.

The BPCTCA ELGs for this subcategory are presented in Table 91.

Suspended Solids. A BPCTCA limit of 0.1250 kg/kkb (0.2500 lbs per ton) of coated steel is recommended, equivalent to 50 mg/l based on a 2,500 l/kkg (600 gal./ton) flow rate. An additional allowance of 0.1251 kg/kkg (0.2502 lbs/ton) is provided for those plants utilizing a wet fume hood scrubber in conjunction with the process. One of the strip galvanizing plants (the one with three lines) currently discharges 0.04 lbs/ton, while the other line slightly exceeds the BPCTCA limitation at 0.268 lbs/ton. This waste receives additional treatment in a central treatment plant, so the final effluent meets the limitation.

On the basis of these actual plant operations, the BPCTCA limitation is consistently attainable using standard mixing, polymer addition, and settling equipment and techniques.

Oil and Grease. A BPCTCA limit of 0.0375 kg/kkg (0.0750 lbs/ton) is recommended, equivalent to 15 mg/l based on a 2,500 l/kkg (600 gal./ton) flow rate. An additional

TABLE 91

BPCTCA - EFFLUENT LIMITATIONS GUIDELINES

SUBCATEGORY Hot Coatings - Galvanizing

CRITICAL PARAMETERS	BPCTCA LIMITATIONS Kg/KKg (1) (LB/1000 LB)	BPCTCA LIMITATIONS mg/l (2)	CONTROL & TREATMENT TECHNOLOGY (3)	ESTIMATED (4) TOTAL COST $/KKg	ESTIMATED (4) TOTAL COST $/TON
Suspended Solids	0.1250 0.1250 (5)	50	Separate collection, equalization, blending and settling; chrome reduction, lime and polymer addition, flocculation, settling, and continuous oil skimming. pH neutralization	1.04	0.949
Oil and Grease	0.0375 0.0375 (5)	15			
Total Zinc	0.0125 0.0125 (5)	5			
Hexavalent Chromium	.0.00005 0.00005 (5)	·0.02			
Total Chromium	0.0075 0.0075 (5)	3			
pH	6.0-9.0				

Flow for all operations: Most probable value is 2500 liters of effluent per kkg of coated product (600 gal/ton).

(1) kg/kkg (lb/1000 lb) of coated product produced.
(2) Milligrams/liter, based on a flow of 2500 liters effluent per kkg of coated product (600 gal/ton).
(3) Technology listed is not necessarily all inclusive, nor does it reflect all possible combinations or permutations of treatment methods.
(4) Costs may vary ± 50%, depending on such factors as location, availability of land and chemicals, flow to be treated, treatment technology selected where competing alternatives exist, and extent of preliminary modifications required to accept the indicated control and treatment devices. Estimated total costs shown are only incremental required above those facilities which are normally existing within a plant.
(5) These limitations apply in addition if the galvanizing line has a fume hood scrubber. The most probable value is 2500 liters of effluent for kkg of coated product (600 gal/ton).

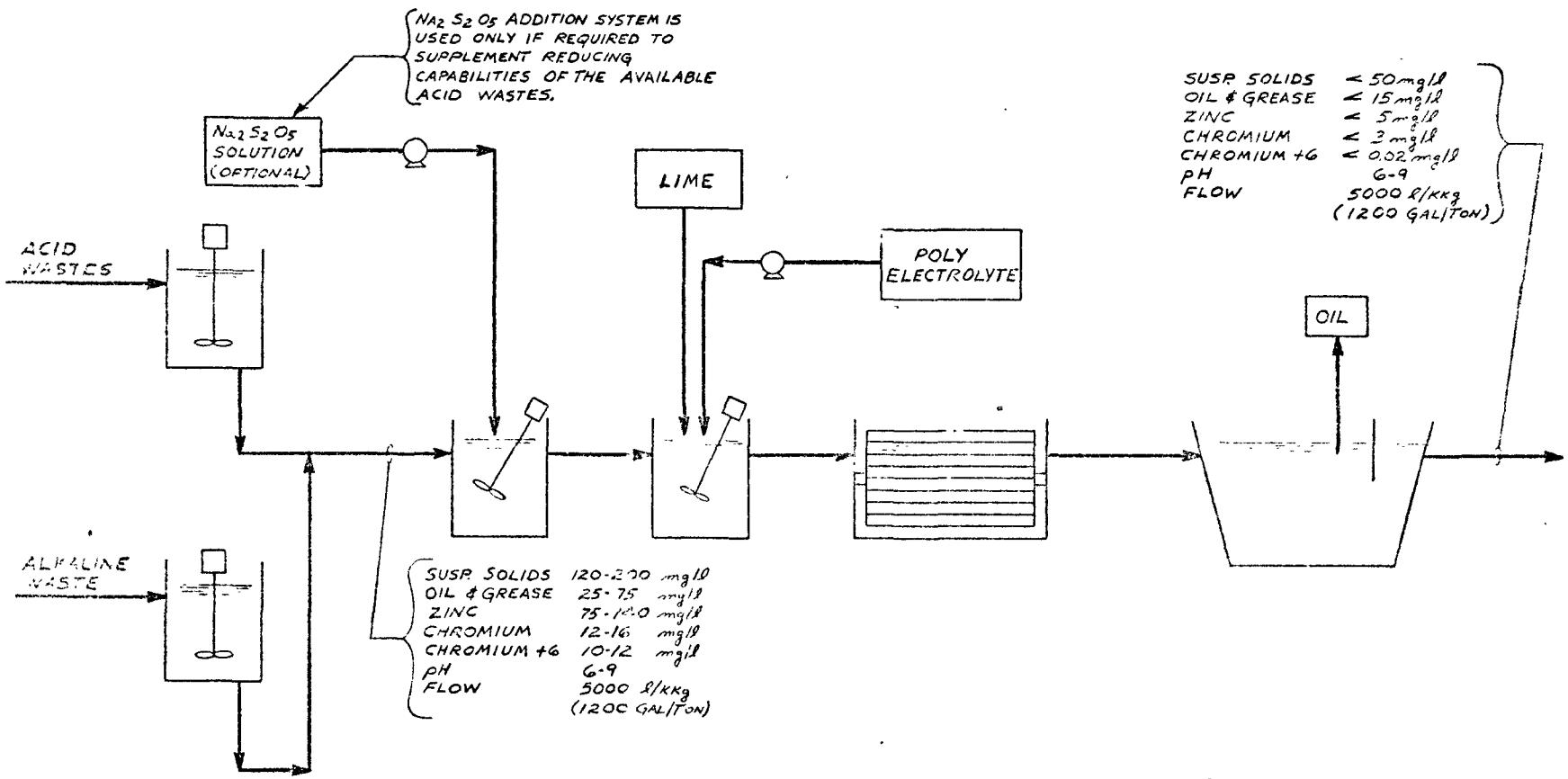

REFERENCE LEVEL SYSTEM
BPCTCA MODEL

ENVIRONMENTAL PROTECTION AGENCY
STEEL INDUSTRY STUDY
HOT COATING / GALVANIZING
SUBCATEGORY
BPCTCA MODEL

REV. 11-25-74, 5-22-75. | FIGURE 87

allowance of 0.0375 kg/kkg (0.0750 lbs/ton) is provided for those plants utilizing wet fume hood scrubbers in conjunction with the coating operations. The galvanizing plant operating three lines and providing wet fume hood scrubbers attains this limit, treating to an effluent level of 0.10 lbs of oil per ton of galvanized product, 67% of its appropriate limitations. The BPCTCA limitation is thus readily attainable using standard oil skimming and removal equipment and techniques. The other galvanizing plant exceeds the limitation by onethird, but this treated wastewater receives additional aeration, sedimentation, and oil skimming in a central treatment plant, so the final effluent also meets the limit. The wire galvanizing operation was discharging its treated wastes to a municipal sanitary authority at 9 mg/l oils and greases, but this was equivalent to 0.3 lbs/ton.

Zinc. A BPCTCA limit of 0.0125 kg/kkg (0.0250 lbs/ton) of galvanized product is recommended, equivalent to 5 mg/l based on a 2,500 l/kkg (600 gal./ton) flow rate. An additional allowance of 0.0125 kg/kkg (0.0250 lbs/ton) is provided for those plants utilizing wet fume hood scrubbers in conjunction with the coating operations. Both continuous galvanizing plants surveyed achieve zinc levels considerably below this limit, averaging 0.0078 lbs of zinc per ton of coated product. Allowances were made because the recommended BPCTCA limit is based upon using the comparatively simpler mixing, polymer addition, and settling equipment and techniques needed to attain the suspended solids limits, while the two continuous galvanizing lines surveyed have equipment more appropriate for attaining BATEA limitations as discussed in Section X.

Hexavalent Chromium. A BPCTCA limit for hexavalent chromium of 0.00005 kg/kkg (0.00010 lbs/ton) is recommended, equivalent to 0.02 mg/l based on a 2,500 l/kkg (600 gal./ton) flow rate. An additional allowance of 0.00005 kg/kkg (0.00010 lbs/ton) is provided for these plants utilizing wet fume hood scrubbers in conjunction with the coating operations. Both continuous galvanizing plants surveyed were discharging treated effluents containing less than 60% of the stated BPCTCA limits, utilizing the reducing capability of dilute pickling solutions to convert hexavalent chromium to trivalent. In some operations, it may be necessary to provide separate chromium reduction via addition of other reducing agents. The trivalent chromium is then precipitated along with zinc and iron.

Total Chromium. A BPCTCA limit for total chromium of 0.0075 kg/kkg (0.0150 lbs/ton) is recommended, equivalent to 3 mg/l

based on a 2,500 l/kkg (600 gal./ton) discharge flow rate. An additional allowance of 0.0075 kg/kkg (0.0150 lbs/ton) is provided for those plants with wet fume hood scrubbers. Both continuous galvanizing operations were discharging less than 30% of the BPCTCA limits for total chromium, but since these treatment sequences were more appropriate for BATEA than BPCTCA limitations, allowances were made to justify use of simpler treatment techniques.

pH. As in all other subcategories, the BPCTCA limitations for pH require discharges to be in the range 6.0 to 9.0. Since treatment is required to achieve BPCTCA limitations for zinc and chromium, the attainment of pH limitations will not require any additional equipment or expense.

Hot Coatings - Terne Operations

Two plants operating terne plating lines were surveyed, and both of these were practicing tight control to minimize drag-out of solutions from process tanks. As a result, neither plant produced sufficient quantities of objectionable pollutants to require special treatment. Process water flow rates ranged from 2,150 to 4,115 l/kkg (516 to 987 gal./ton), and fume hood scrubber waters contributed an equivalent load at one of the plants. Due to the lack of data from operating treatment systems, BPCTCA limitations for all parameters were set at the level anticipated in effluents from simple mixing, polymer addition and settling equipment as discussed in the hot coatings - galvanizing subcategory.

The BPCTCA ELGs for this subcategory are presented in Table 92.

Suspended Solids. A BPCTCA limit of 0.1251 kg/kkg (0.2502 lbs/ton) of coated product is recommended, equivalent to 50 mg/l based on a 2,500 l/kkg (600 gal./ton) discharge flow rate. An additional allowance of 0.1251 kg/kkg (0.2502 lbs/ton) is provided for those plants utilizing a wet fume hood scrubber system in conjunction with the coating operations. Despite lack of treatment, both terne plating lines surveyed were meeting the recommended limits, discharging 0.11 and 0.08 kg/kkg (0.22 and 0.16 lbs/ton) suspended solids loads in their plant effluents.

Oil and Grease. A BPCTCA limitation of 0.0375 kg/kkg (0.0750 lbs/ton) is recommended for oil and grease, equivalent to 15 mg/l based on a 2,500 l/kkg (600 gal./ton) flow rate. An additional allowance of 0.0375 kg/kkg (0.0750 lbs/ton) is provided for those plants utilizing wet fume

TABLE 92

BPCTCA - EFFLUENT LIMITATIONS GUIDELINES

SUBCATEGORY Hot Coatings - Terne

CRITICAL PARAMETERS	BPCTCA LIMITATIONS Kg/KKg (LB/1000 LB)[1]	BPCTCA LIMITATIONS mg/l[2]	CONTROL & TREATMENT TECHNOLOGY[3]	ESTIMATED[4] TOTAL COST $/KKg	ESTIMATED[4] TOTAL COST $/TON
Suspended Solids	0.125D 0.125D[5]	50	Separate collection, equalization, blending and mixing of acid and alkaline wastes, followed by lime and polymer addition, 24 hour settling, and continuous oil skimming. pH neutralization	0.997	0.906
Oil and Grease	0.0375 0.0375[5]	15			
Total Lead	0.00125 0.00125[5]	0.5			
Total Tin	0.0125 0.0125[5]	5			
pH	6.0-9.0				

Flow for all operations: Most probable value is 2500 liters of effluent per kkg of coated product (600 gal/ton)

(1) kg/kkg (lb/1000 lb) of coated product produced.
(2) Milligrams/liter, based on a flow of 2500 liters effluent per kkg of coated product (600 gal/ton).
(3) Technology listed is not necessarily all inclusive, nor does it reflect all possible combinations or permutations of treatment methods.
(4) Costs may vary ± 50%, depending on such factors as location, availability of land and chemicals, flow to be treated, treatment technology selected where competing alternatives exist, and extent of preliminary modifications required to accept the indicated control and treatment devices. Estimated total costs shows are only incremental required above those facilities which are normally existing within a plant.
(5) These limitations apply in addition if the terne line has a fume hood scrubber. Most probable value is 2500 liters of effluent per kkg of coated product (600 gal/ton).

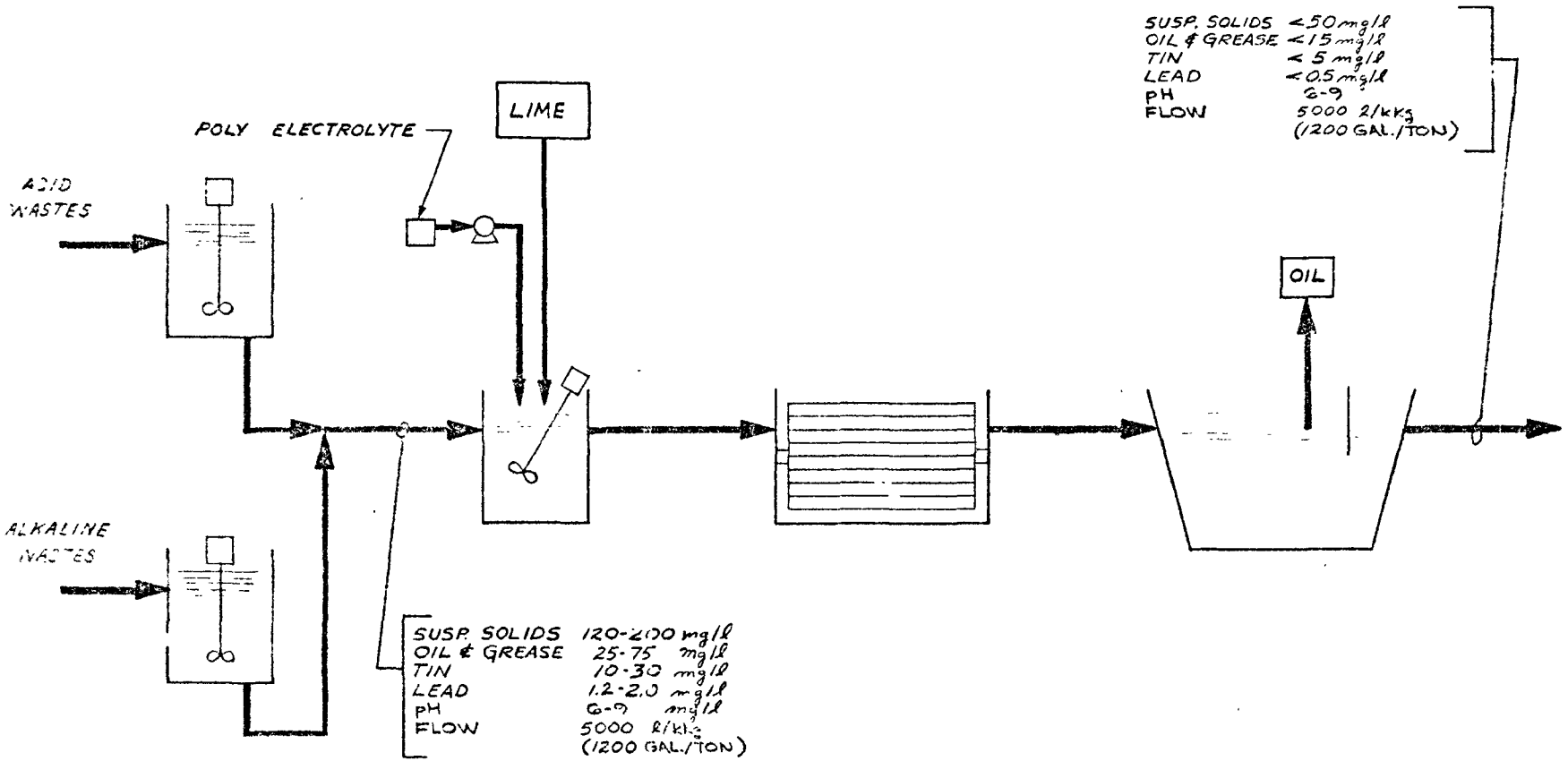

REFERENCE LEVEL SYSTEM
BPCTCA MODEL

ENVIRONMENTAL PROTECTION AGENCY
STEEL INDUSTRY STUDY
HOT COATINGS - TERNE
5 BCATEGORY
BPCTCA MODEL

11-25-74
REV. 5-22-75

FIGURE 88

hood scrubbers in conjunction with coating operations. Both lines surveyed were meeting the required limitations, averaging oil and grease loadings equivalent to 35% of the limits.

Lead. A BPCTCA limit for lead of 0.00125 kg/kkg (0.0025 lbs/ton) of coated product is recommended, equivalent to 0.5 mg/l based on a flow rate of 2,500 l/kkg (600 gal./ton). An additional allowance of 0.00125 kg/kkg (0.0025 lbs/ton) is provided for plants utilizing wet fume hood scrubbers in conjunction with the coating operations. Data were available from both of the terne lines visited, which were discharging lead at an average rate of 0.0005 kg/kkg (0.001 lbs/ton) of coated product. Due to the limited number of samples, the recommended BPCTCA limit was conservatively set at the level expected in the effluent from the simple mixing, polymer addition, and settling equipment used to attain BPCTCA suspended solids limits.

Tin. A BPCTCA limitation for tin of 0.0125 kg/kkg (0.0250 lbs/ton) of coated product is recommended, equivalent to 5 mg/l based on a flow rate of 2,500 l/kkg (600 gal./ton). An additional allowance of 0.0125 kg/kkg (0.0250 lbs/ton) is provided for those plants utilizing wet fume hood scrubbers in conjunction with coating operations both terne plating lines surveyed were successfully attaining this level despite lack of treatment, discharging loads of 0.0043 and 0.0183 kg/kkg (0.0086 and 0.0366 lbs/ton). The latter plant was credited with the additional allowance because it was operating wet fume hood scrubbers. Again, BPCTCA limits were set at levels expected from simple, readily available treatment technology.

pH. As in all subcategories, the BPCTCA limitations for pH require final discharges in the range 6.0 to 9.0. Since treatment is required to achieve BPCTCA limitations for lead and tin, the attainment of pH limitations will not require any additional equipment or expense.

Miscellaneous Runoffs - Storage Piles - Coal, Stone, and Ore

These three miscellaneous runoffs are discussed together since at a minimum, all three runoffs would require the same general type of treatment; namely collection, sedimentation, and pH adjustment. This is not meant to imply that these runoffs should necessarily be collected and treated together, although that possibility need not be specifically excluded either. Nor should this analysis necessarily preclude that the above treatment is all that is needed in every case. For coal pile runoffs in particular, the

presence of other undesirable contaminants (as discussed in Section V) due to their presence in the coal would be heavily dependent on the area where the coal is mined and the particular mineral makeup of the soil in that area.

Thus, based upon a minimum treatment concept, these fugitive runoffs could generally be treated via:

Collection

Installation of an impervious liner (vinyl, rubber, etc.) at the base of the pile to prevent subsurface runoff. This technology has been used to a minor extent in steam electric power plants to minimize their coal pile subsurface runoffs. Generally, a 6 in. layer of sand or earth must be placed between the liner and the stockpiled material to prevent damage to the liner. The use of this technology may also, in most cases, be limited to installations where a stockpile has yet to be placed. At many locations, because of the logistics of unloading, storage, and end use facilities, it will not be possible to change the location of a stockpile or move it temporarily while a liner is being installed.

Installation of a perimeter collection system to drain subsurface runoff stopped by the liner and surface runoff from the pile surface. These collected wastewaters would then be routed to a holding facility, probably a pond, for treatment, storage before treatment, or treatment and storage before further treatment.

Treatment

The wastewaters collected in the holding facility can then be treated at that point or stored for treatment at another point, or both. Whatever method employed, the general treatment provided should consist of, at a minimum, sedimentation and pH adjustment.

Due to the high capital investment required to accomplish the above control and treatment technology, no BPCTCA limitations for this segment of the industry are proposed. Capital investments and operating costs will be deferred until such time as BATEA limits apply.

Miscellaneous Runoffs - Casting and Slagging

Ingot Casting. Ingot casting operations employ minimal amounts of water for mold spray cooling. Water usage is so minimal that there is rarely any runoff from the area proper. In addition, any excess spray water would generally

contain only suspended matter in the form of larger scale particles which would settle in the immediate spray area. A runoff that might exist at a specific site due to excessive spray water usage could best be resolved by tightening up on spray water usage.

Based upon the minimal water use requirements for ingot mold spray cooling operations, and the fact that current industry practice controls this usage to a point where no overland runoff normally exists, it is recommended that the BPCTCA and BATEA Guidelines for discharges from ingot casting operations be set at zero aqueous discharge of pollutants. The additional costs associated with achieving these levels are zero since they represent current general practice.

Pig Casting. As in the case of ingot casting, spray water usage is generally so minimal in the pig casting operation that no runoff is expected. Thus, it is recommended that the limitations for BPCTCA and BATEA be set at zero aqueous discharge. Since the technology to achieve this is already generally in practice, there are no additional costs required to achieve these standards.

Slagging. There are seldom any overland discharges from the slag quenching operations within a steel mill. The majority of the quench water is evaporated during quenching, the remainder permeates through to the base of the quench pit, where, upon removal of the quenched slag, it sits in a pool until evaporated by the next hot slag charge.

Also, these slag quench pits are normally graded to prevent overland runoff from the pit and promote the collection of excess quench water in the bottom of the pit. Thus, there is generally no overland runoff from the slag quenching area.

The recommended BPCTCA and BATEA Guidelines for slag quenching are established as zero aqueous discharge of pollutants. The technology used to achieve these standards will employ the current practice generally used to prevent overland runoffs and the installation of impervious base liners to prevent subsurface runoff.

Noncontact Cooling Water Recirculation System Blowdown

The use of a recirculating noncontact cooling water system in steelmaking or finishing processes provides a method for significantly reducing aqueous thermal discharges from the plant site. These recirculating systems are usually part of an evaporative cooling system which provides for maximum

heat rejection to the surrounding air. These recirculating systems are normally associated with newer or refurbished older mills.

Because these systems utilize evaporative cooling to regenerate cool water for reuse, a certain amount of blowdown from the system is required to maintain stable operating conditions. This blowdown, in certain instances, may itself be a potential pollutional discharge.

The volume of these blowdown wastewaters will vary significantly, depending upon the size of the recirculating system and the design and operating characteristics of the evaporative cooling system. Thus, it is not possible to predict the general magnitude of these discharges on an industry-wide basis. Quantities of blowdown discharges will be very site specific and cannot easily be related to plant production.

The potential pollutants in these discharges generally come from those additives that are used to inhibit corrosion in the recirculating system. Of primary concern are those plants that use hexavalent chrome-zinc inhibitor systems. This treatment provides the greatest corrosion protection but, unfortunately, also the greatest pollution potential.

Another possible contaminant of importance could be suspended matter in the recirculation system. This contaminant can be introduced into the cooling system either through the makeup water supply or by the washing of airborne contaminants by the evaporative cooling system. Although the potential deleterious affect of this contaminant in the recirculating water system can be controlled through the use of dispersants, it still may constitute a potential pollutant in the blowdown stream.

Because the quantity and quality of these blowdown wastes are so site specific, it is not possible to establish raw waste or plant effluent loads for these discharges on a pounds per ton of product basis.

It is recommended that, where possible, the wastes from cooling system blowdown be collected and combined with other process wastes which require removal of chrome and suspended solids.

Where this is not possible, it is recommended that separate treatment facilities for these wastes be provided to treat them before discharge. The technology exists and has been utilized in achieving the ELG's for other subcategories in

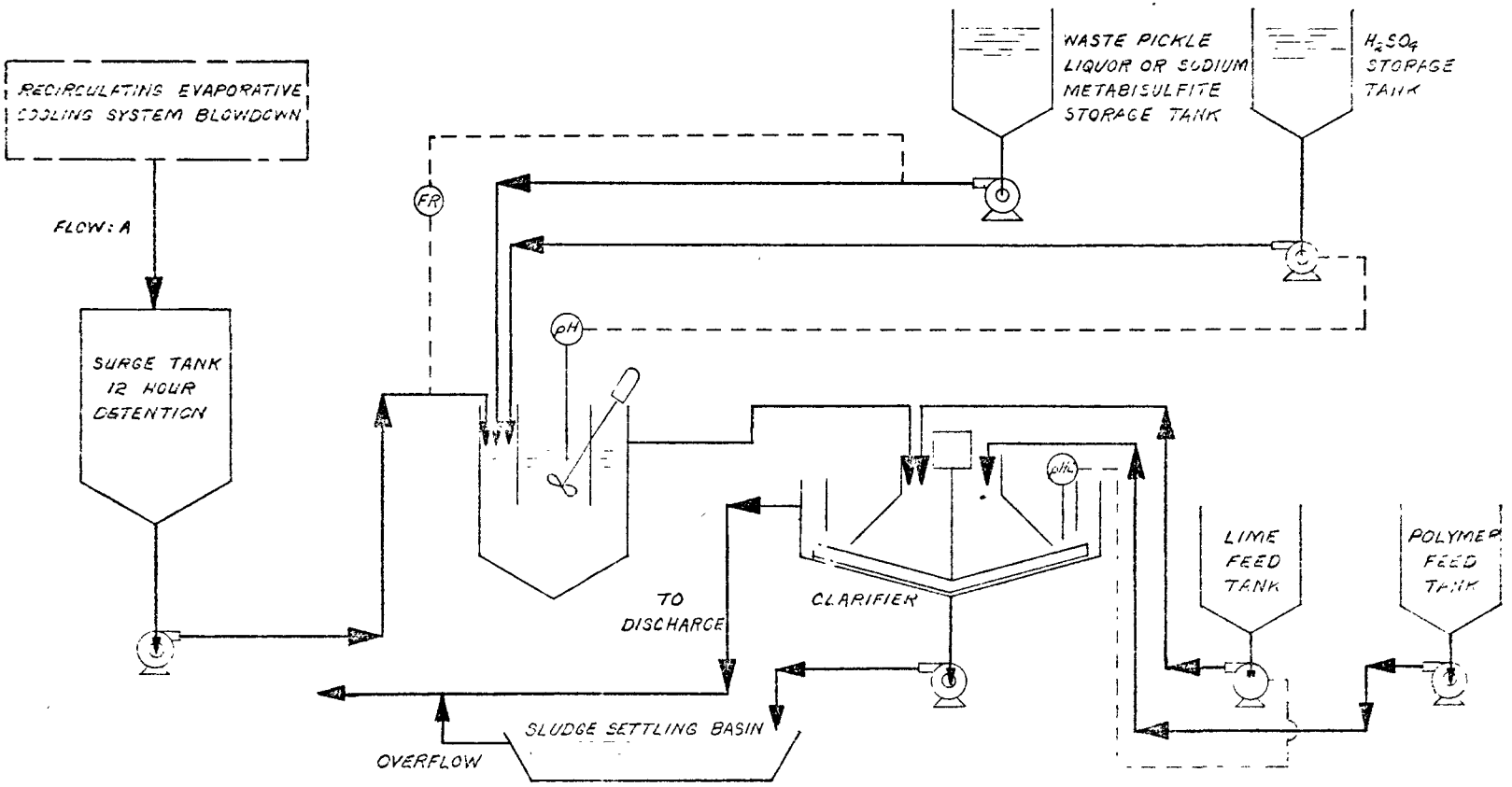

SUBCATEGORIES	SYSTEM FLOWS & CAPACITIES FLOW A
BASIC OXYGEN FURNACE	6.31 L/SEC (100 GPM)
OPEN HEARTH FURNACE	3.79 L/SEC (60 GPM)
ELECTRIC ARC FURNACE	2.52 L/SEC (40 GPM)
VACUUM DEGASSING	0.32 L/SEC (5 GPM)
CONTINUOUS CASTING	5.05 L/SEC (80 GPM)
HOT FORMING	10.73 L/SEC (170 GPM)
PIPES & TUBES	0.63 L/SEC (10 GPM)

- - - - REFERENCE LEVEL SYSTEM
——— BPCTCA MODEL

ENVIRONMENTAL PROTECTION AGENCY
STEEL INDUSTRY STUDY
NON-CONTACT COOLING WATER BLOWDOWN
SUBCATEGORY
BPCTCA MODEL

12-15-71 | FIGURE 89

this study to remove these contaminants before discharge. Hexavalent and total chromium can be removed via acidification, reduction to the trivalent state with a strong reducing agent, and precipitation with lime. The lime precipitation step will also precipitate zinc, if present, from the wastewater. In addition, the lime precipitation, along with the possible use of a flocculant or an anionic or cationic polymer, would remove the bulk of suspended matter in solution.

Based upon existing technology and the effluent levels achievable through application of this technology, the BPCTCA ELGs for these wastes have been set as follows:

BPCTCA:	Suspended Solids	-	50 mg/l
	Total Chromium	-	3.0 mg/l
	Hexavalent Chromium	-	0.02 mg/l
	Zinc	-	5.0 mg/l
	Phosphorous	-	8.0 mg/l
	pH	-	6.0 to 9.0

Utility Area Wastewaters

In the steel mill, those areas where water is treated and prepared for use in the plant, or where steam or electricity are generated are generally referred to as the utilities areas.

During the preparation of raw water for use, wastes are generated which constitute a wastewater discharge from the utility area. These wastes include clarifier blowdown, sand and carbon filter backwash, spent softener and demineralizer regenerants, and steam system blowdown.

Although the character of these wastes are more specifically discussed in another section of this report, the overall character of these combined wastes are discussed here with the intent to establish practical ELG's to control the quantity and quality of discharges from the utilities area.

The quantity of wastes generated from utilities areas in general is not a predictable value. The quantity of wastes is site specific and depends upon the particular utility operations in service, the size of these operations, and the quality of the raw intake water to be treated and used. Because the magnitude of the wastes are so dependent upon the above factors, they are not predictable on a gallons per ton of product basis.

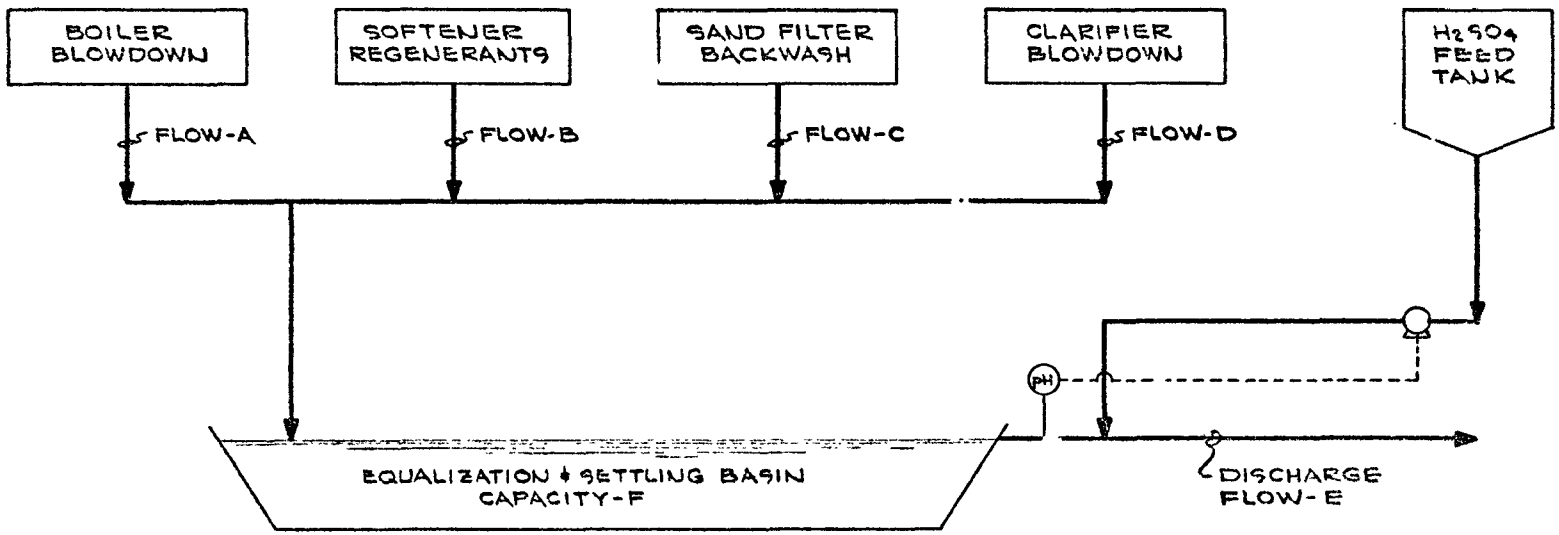

SUBCATEGORIES	SYSTEM FLOWS & CAPACITIES					
	FLOW-A	FLOW-B	FLOW-C	FLOW-D	FLOW-E	CAPACITY-F
BY-PRODUCT COKE MAKING	0.32 ℓ/SEC 5 GPM	0.69 ℓ/SEC 11 GPM	0.19 ℓ/SEC 3 GPM	0.06 ℓ/SEC 1 GPM	1.26 ℓ/SEC 20 GPM	113550 LITERS 30,000 GALS.
VACUUM DEGASSING	0.06 ℓ/SEC 1 GPM	0.32 ℓ/SEC 5 GPM	0.06 ℓ/SEC 1 GPM	0.06 ℓ/SEC 1 GPM	0.50 ℓ/SEC 8 GPM	45420 LITERS 12,000 GALS.
PICKLING-HCl-H_2SO_4-ALL CONCENTRATE SUBCATEGORIES	0.03 ℓ/SEC 0.5 GPM	0.13 ℓ/SEC 2.1 GPM	0.04 ℓ/SEC 0.6 GPM	0.01 ℓ/SEC 0.2 GPM	0.22 ℓ/SEC 3.5 GPM	18925 LITERS 5,000 GALS.

——— BPCTCA MODEL

ENVIRONMENTAL PROTECTION AGENCY
STEEL INDUSTRY STUDY
UTILITY AREA WASTEWATER SYSTEM
COKE MAKING, DEGASSING & PICKLING CONCENTRATES
SUBCATEGORY BPCTCA MODEL

12-16-74	FIGURE 90-1

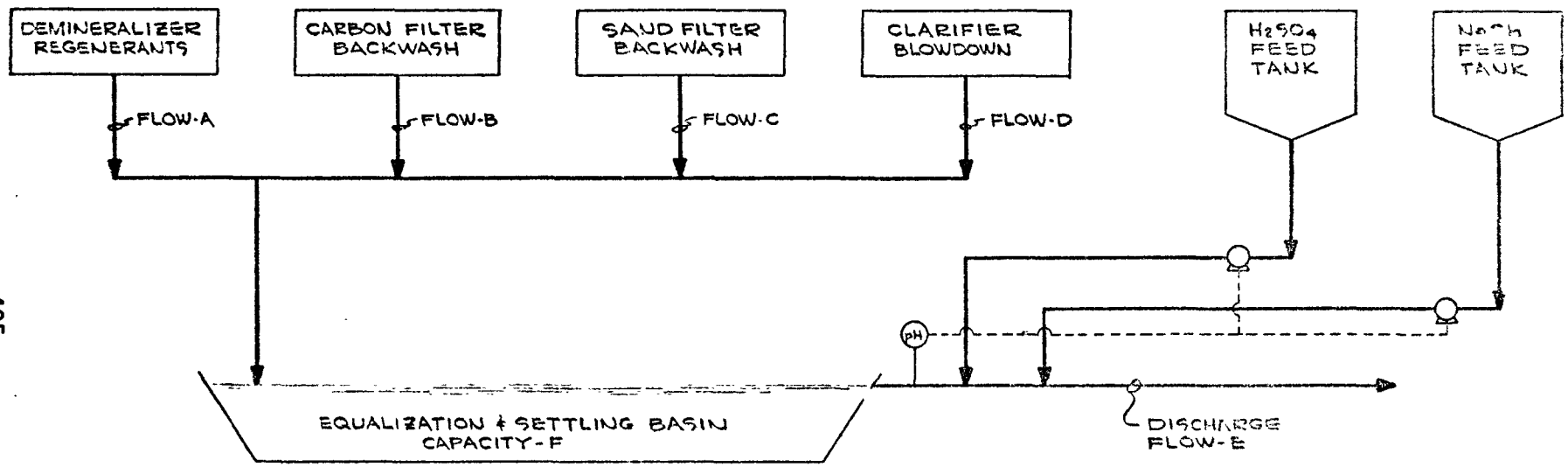

SUBCATEGORIES	SYSTEM FLOWS & CAPACITIES					
	FLOW-A	FLOW-B	FLOW-C	FLOW-D	FLOW-E	CAPACITY-F
HOT COATINGS	4.54 ℓ/SEC 72 GPM	1.01 ℓ/SEC 16 GPM	1.01 ℓ/SEC 16 GPM	0.19 ℓ/SEC 3 GPM	5.74 ℓ/SEC 91 GPM	586675 LITERS 155,000 GALS.
COLD COATINGS	26.28 ℓ/SEC 426 GPM	5.81 ℓ/SEC 92 GPM	6.12 ℓ/SEC 97 GPM	1.26 ℓ/SEC 20 GPM	33.95 ℓ/SEC 538 GPM	3785000 LITERS 1,000,000 GALS.

——— BPCTCA MODEL

ENVIRONMENTAL PROTECTION AGENCY
STEEL INDUSTRY STUDY
UTILITY AREA WASTEWATER SYSTEM
HOT & COLD COATINGS SUBCATEGORIES
BPCTCA MODEL

12-13-74 | FIGURE 90-2

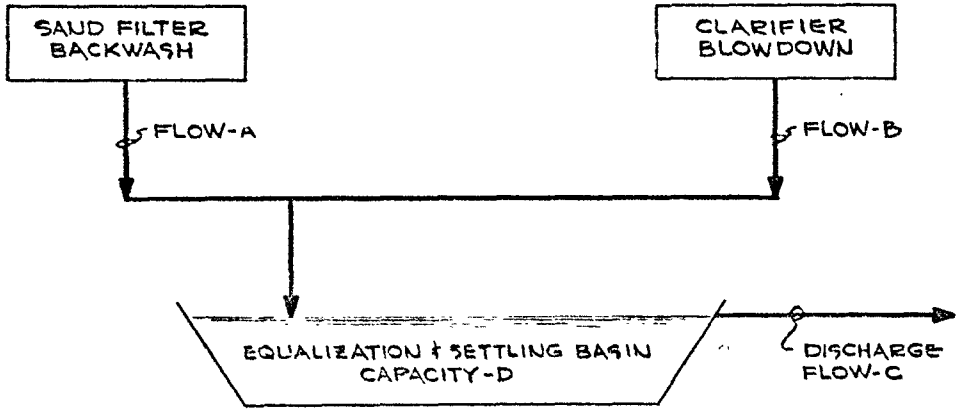

SUBCATEGORIES	SYSTEM FLOWS & CAPACITIES			
	FLOW-A	FLOW-B	FLOW-C	CAPACITY-D
BASIC OXYGEN FURNACE	0.63 ℓ/SEC 10 GPM	0.13 ℓ/SEC 2 GPM	0.76 ℓ/SEC 12 GPM	75700 LITERS 20,000 GALS.
OPEN HEARTH FURNACE	0.38 ℓ/SEC 6 GPM	0.06 ℓ/SEC 1 GPM	0.44 ℓ/SEC 7 GPM	37850 LITERS 10,000 GALS.
ELECTRIC ARC FURNACE	0.25 ℓ/SEC 4 GPM	0.06 ℓ/SEC 1 GPM	0.32 ℓ/SEC 5 GPM	37850 LITERS 10,000 GALS.
CONTINUOUS CASTING	4.67 ℓ/SEC 74 GPM	101 ℓ/SEC 16 GPM	5.68 ℓ/SEC 90 GPM	492050 LITERS 130,000 GALS.
HOT FORMING - ALL SUBCATEGORIES	1.26 ℓ/SEC 20 GPM	0.32 ℓ/SEC 5 GPM	1.58 ℓ/SEC 25 GPM	136260 LITERS 36,000 GALS.
HOT WORKED PIPE AND TUBES	0.06 ℓ/SEC 1 GPM	0.06 ℓ/SEC 1 GPM	0.13 ℓ/SEC 2 GPM	11355 LITERS 3000 GALS.
PICKLING-HCl-H_2SO_4-ALL RINSE SUBCATEGORIES	2.84 ℓ/SEC 45 GPM	0.63 ℓ/SEC 10 GPM	3.47 ℓ/SEC 55 GPM	302800 LITERS 80,000 GALS.
COLD ROLLING - ALL SUBCATEGORIES	2.21 ℓ/SEC 35 CFM	0.44 ℓ/SEC 7 GPM	2.65 ℓ/SEC 42 GPM	230885 LITERS 61,000 GALS.

——— BPCTCA MODEL

ENVIRONMENTAL PROTECTION AGENCY STEEL INDUSTRY STUDY UTILITY AREA WASTEWATER SYSTEM STEEL-MAKING, CASTING, HOT FORMING COLD ROLLING & PICKLING-ALL RINSE SUBCATEGORIES BPCTCA MODEL	
12-16-74	FIGURE 90-3

The overall quality of utility area discharges is also quite variable, again because of the above mentioned factors, and thus are not predictable on an overall basis.

However, from a basic knowledge of the utility area operations, it is known that possible contaminants in these wastes include suspended solids, alkalinity, or acidity. The technology exists to insure that these contaminants are present in acceptable concentrations before discharge. Such treatment technology has already been applied to other subcategory steel industry processes to produce acceptable effluent concentrations.

Based upon the technology available to treat these wastes, (neutralization and sedimentation) and the application of this technology to this subcategory, the BPCTCA ELGs for utility area wastewaters are as follows:

Suspended Solids	-	50 mg/l
pH	-	6.0 to 9.0

Maintenance Department Wastes

The only liquid wastes generated in the maintenance operations of a steel mill that are directly dependent upon the tons of steel produced are those wastes generated during maintenance on the rolling mills. The greater the tonnage rolled, the more frequently rolls must be changed and refaced and the more wastes generated during the refacing operation. The roll shop is normally located adjacent to the rolling mill and a common waste treatment system may serve both operations. It is, therefore, impracticable to separate the maintenance waste load from that of the rolling operation and to establish a waste load attributable exclusively to the maintenance operation. This waste would therefore be included with the waste from the rolling operation.

Most other liquid wastes resulting from maintenance operations are independent of the tons of steel produced and the type of product. It is, therefore, impossible to estimate a waste load for maintenance generated wastes and to establish a waste load per ton of product. As a general rule, the normal daily maintenance wastewater discharge will have little overall effect on the quality of the plant effluent. However, problems can arise when even small volumes of oil are improperly disposed of in the plant sewer system.

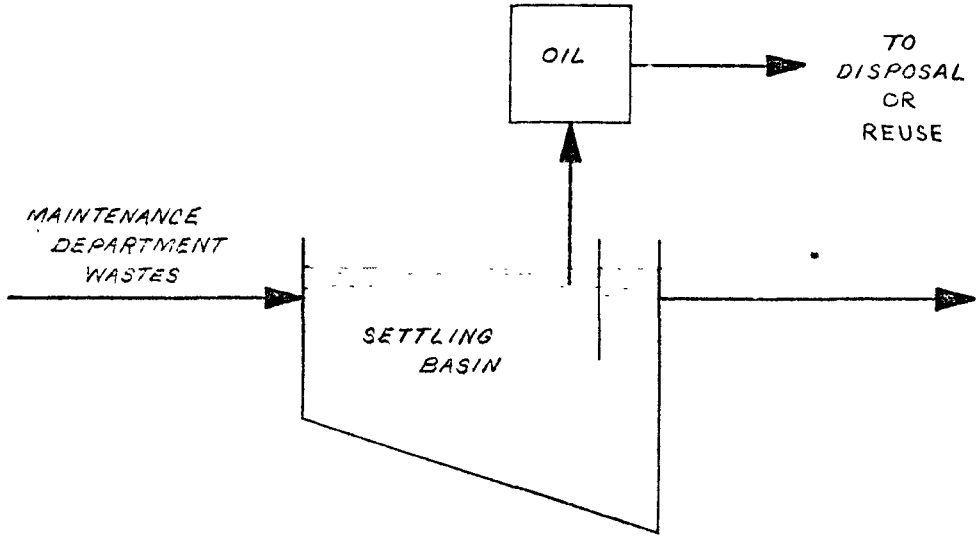

——— *BPCTCA MODEL

ENVIRONMENTAL PROTECTION AGENCY STEEL INDUSTRY STUDY MAINTENANCE DEPARTMENT WASTES SUBCATEGORY BPCTCA MODEL	
REV 12-20-74 6-9-75	FIGURE 91

Effluent guidelines for the regulation of maintenance wastewater based upon production rates would be impractical, as there would either be no waste or an undetermined amount. The guidelines should, therefore, stress the reduction and control of these wastes by establishing good housekeeping procedures, central collecting stations for small volumes of oily wastes, and the education of employees on the proper methods of disposal of these wastes.

It is further recommended that where it is not practicable or feasible to combine maintenance department wastes with a process waste treatment system, a separate treatment facility should be installed for the maintenance wastewaters. As discussed in the preceding paragraphs, the discharge limitations should be established on concentration only. Based on technology available and consistent with numbers established for the Phase I study, the BPCTCA ELGs have been set as follows:

Suspended Solids	-	50 mg/l
Oil and Grease	-	15 mg/l
pH	-	6.0 to 9.0

Central Treatment

In some instances, plants will combine two or more wastewater flows from different process subcategories or from sources for which regulations have not been proposed, and treat the combinations in a central treatment plant. One such example is the joint treatment of wastewaters from pickling and cold rolling operations, for which specific regulations have been written under those subcategories. For all other central treatment systems, the allowable BPCTCA loads for discharge will be the sum of the loads from regulated sources, plus the loads determined from the flow rates of the unregulated sources multiplied by the following allowable concentrations:

Suspended Solids	-	50 mg/l
Oil and Grease	-	15 mg/l
Total Chromium	-	3.0 mg/l
Hexavalent Chromium	-	0.02 mg/l
Phosphorus	-	8 mg/l
Zinc	-	5 mg/l
pH	-	6.0 to 9.0

SECTION X

EFFLUENT QUALITY ATTAINABLE THROUGH THE APPLICATION OF THE BEST AVAILABLE TECHNOLOGY ECONOMICALLY ACHIEVABLE

EFFLUENT LIMITATIONS GUIDELINES

The effluent limitations which must be achieved by July 1, 1983 are to specify the degree of effluent reduction attainable through the application of the best available technology economically achievable. Best available technology is not based upon an average of the best performance within an industrial category, but is to be determined by identifying the very best control and treatment technology employed by a specific point source within the industrial category or subcategory, or where it is readily transferable from one industry to another, such technology may be identified as BATEA technology. However, where limitations based on the very best control and treatment technology employed would involve the application of a technology not considered at this time to be cost-effective, the BATEA limitations were based on other technologies which were considered to be cost-effective. For example, filtration following clarification increases the capital investment in a manner which is disproportionate to the additional solids removal achieved. A specific finding must be made as to the availability of control measures and practices to eliminate the discharge of pollutants, taking into account the cost of such elimination.

Consideration must also be given to:

1. The size and age of equipment and facilities involved.

2. The processes employed.

3. Non-water quality environmental impact (including energy requirements).

4. The engineering aspects of the application of various types of control techniques.

5. Process changes.

6. The cost of achieving the effluent reduction resulting from application of BATEA technology.

Best available technology assess the availability in all cases of in-process changes or controls which can be applied to reduce waste loads, as well as additional treatment techniques which can be applied at the end of a production process. Those plant processes and control technologies which at the pilot plant, semi-works, or other level, have demonstrated both technological performance and economic viability at a level sufficient to reasonably justify investing in such facilities may be considered in assessing best available technology.

Best available technology is the highest degree of control technology that has been achieved or has been demonstrated to be capable of being designed for plant scale operation up to and including "no discharge" of pollutants. Although economic factors are considered in the development, the cost for this level of control is intended to be the top-of-the-line current technology subject to limitations imposed by economic and engineering feasibility. However, this level may be characterized by some technical risk with respect to performance and with respect to certainty of costs. Therefore, the BATEA limitations may necessitate some industrially sponsored development work prior to its application.

RATIONALE FOR THE SELECTION OF BATEA

The following paragraphs summarize the factors that were considered in selecting the categorization, water use rates, level of treatment technology, effluent concentrations attainable by the technology, and hence the establishment of the effluent limitations for BATEA.

Size and Age of Facilities and Land Availability Considerations

As discussed in Section IV, the age and size of steel industry facilities has little direct bearing on the quantity or quality of wastewater generated. Thus, the ELG for a given subcategory of waste source applies equally to all plants regardless of size or age. Land availability for installation of add-on treatment facilities can influence the type of technology utilized to meet the ELGs. This is one of the considerations which can account for a wide range in the costs that might be incurred.

Consideration of Processes Employed

All plants in a given subcategory use the same or similar production methods, giving similar discharges. There is no

evidence that operation of any current process or subprocess will substantially affect capabilities to implement the best available control technology economically achievable. At such time that new processes appear imminent for broad application, the ELGs should be amended to cover these new sources. The treatment technologies to achieve BATEA assess the availability of in-process controls as well as control or additional treatment techniques employed at the end of a production process.

Consideration of Non-Water Quality Environmental Impact

Impact of Proposed Limitations on Air Quality. The impact of BATEA limitations upon the non-water elements of the environment has been considered. The increased use of recycle systems have the potential for increasing the loss of volatiles to the atmosphere. Recycle systems are so effective in reducing wastewater volumes, and hence waste loads to and from treatment systems, and in reducing the size and cost of treatment systems that a trade-off must be accepted. Recycle systems requiring the use of cooling towers have contributed significantly to reductions of effluent loads while contributing only minimally to air pollution problems. Careful operation of such a system can avoid or minimize air pollution problems.

Impact of Proposed Limitations on Solid Waste Problems. Consideration has also been given to the solid waste aspects of water pollution controls. The processes for treating the wastewaters from this industry produce considerable volumes of sludges. Much of this material is inert iron oxide which can be reused profitably in melting operations. Other sludges not suitable for reuse must be disposed of to landfills, since most of them are chemical precipitates which could be little reduced by incineration. Being precipitates they are by nature relatively insoluble and nonhazardous substances requiring minimal custodial care.

Impact of Proposed Limitations Due to Hazardous Materials. In order to ensure long-term protection of the environment from harmful constituents, special consideration of disposal sites should be made. All landfill sites should be selected so as to prevent horizontal and vertical migration of these contaminants to ground or surface waters. In cases where geologic conditions may not reasonably ensure this, adequate mechanical precautions (e.g., impervious liners) should be taken to ensure long-term protection to the environment. A program of routine periodic sampling and analysis of leachates is advisable. Where appropriate, the location of solid hazardous materials disposal sites should be

permanently recorded in the appropriate office of legal jurisdiction.

Impact of Proposed Limitations on Energy Requirements. The effect of water pollution control measures on energy requirements has also been determined. The additional energy required in the form of electric power to achieve the effluent limitations proposed for BPCTCA and BATEA amounts to less than 2% of the electrical energy used by the steel industry in 1972.

The enhancement to water quality management provided by these proposed effluent limitations substantially outweighs the impact on air, solid waste, and energy requirements.

Consideration of the Engineering Aspects of the Application of Various Types of Control Techniques

The BATEA level of technology is considered to be the best available and economically achievable in that the concepts are proven and available for implementation, and may be readily applied through adaptation or as add-ons to proposed BPCTCA treatment facilities.

Consideration of Process Changes

No process changes are envisioned for implementation of this technology for plants in any subcategory. The treatment technologies to achieve BATEA assess the availability of in-process controls as well as control or additional treatment techniques employed at the end of a production process.

Consideration of Costs of Achieving the Effluent Reduction Resulting from the Application of BATEA Technology

The costs of implementing the BATEA limitations relative to the benefits to be derived is pertinent, but is expected to be higher per unit reduction in waste load achieved as higher quality effluents are produced. The overall impact of capital and operating costs relative to the value of the products produced and gross revenues generated was considered in establishing the BATEA limitations.

The technology evaluation, treatment facility, costing, and calculation of overall capital and operating costs, to the industry as described in Section IX and which provided the basis for the development of the BPCTCA limitations was also used to provide the basis for determining the BATEA limitations, the costs therefore, and the acceptability of those costs.

The initial capital investment and total annual expenditures required of the industry to achieve BATEA limitations are summarized in Table .

After selection of the treatment technology to be designated as one means to achieve the BATEA limitations for each subcategory was made, a sketch of each treatment model was prepared. The sketch for each subcategory is presented following the tables presenting the BATEA limitations for the subcategory.

IDENTIFICATION OF THE BEST AVAILABLE TECHNOLOGY ECONOMICALLY ACHIEVABLE - BATEA

Based on the information contained in Sections III through VIII of this report, a determination has been made that the quality of effluent attainable through the application of the Best Available Technology Economically Achievable is as listed in Tables through . These tables set forth the ELGs for the following process subcategories of the steel industry:

I. Hot Forming Primary
II. Hot Forming Section
III. Hot Forming Flat
IV. Pipe and Tubes
V. Pickling - Sulfuric Acid - Batch Concentrates
VI. Pickling - Sulfuric Acid - Batch Rinse
VII. Pickling - Hydrochloric Acid - Concentrates - Alternate I
VIII. Pickling - Hydrochloric Acid - Rinses - Alternate I
IX. Pickling - Hydrochloric Acid - Concentrates and Rinses - Alternate II
X. Cold Rolling - Recirculation
XI. Cold Rolling - Combination
XII. Cold Rolling - Direct Application
XIII. Hot Coatings - Galvanizing
XIV. Hot Coatings - Terne

In establishing the subject guidelines, it should be noted that the resulting limitations or standards are applicable to aqueous waste discharges only, exclusive of noncontact cooling waters. In the section of this report which discusses control and treatment technology for the iron and steelmaking industry as a whole, a qualitative reference has been given regarding "the environmental impact other than water" for the subcategories investigated.

The effluent guidelines established herein taken into account only those aqueous constituents considered to be

major pollutants in each of the subcategories investigated. In general, the critical parameters were selected for each subcategory on the basis of those waste constituents known to be generated in the specific manufacturing process and also known to be present in sufficient quantity to be inimical to the environment. Certain general parameters such as suspended solids naturally include the oxides of iron and silica. However, these latter specific constituents were not included as critical parameters, since adequate removal of the general parameters (suspended solids) in turn provides for adequate removal of the more specific parameters indicated. This does not hold true when certain of the parameters are in the dissolved state; however, in the case of iron oxides generated in the iron and steelmaking processes, they are for the most part insoluble in the relatively neutral effluents in which they are contained. The absence of apparent less important parameters from the guidelines in no way endorses unrestricted discharge of the same.

The recommended BATEA effluent limitations guidelines resulting from this study are summarized in Tables 93 to 107. These tables also list the control and treatment technology applicable or normally utilized to reach the constituent levels indicated. These effluent limitations set herein are not necessarily the absolute lowest values attainable (except where no discharge of process wastewater pollutants to navigable waters is recommended) by the indicated technology, but rather they represent values which can be readily controlled around on a day by day basis.

It should be noted that these effluent limitations represent values not to be exceeded by any 30 continuous day average. The maximum daily effluent loads per unit of production should not exceed these values by more than a factor of three as discussed in Section IX.

Cost Versus Effluent Reduction Benefits

Estimated total costs on a dollars per ton basis have been included for each subcategory as a whole. These costs have been based on the wastewaters emanating from a typical average size production facility for each of the subcategories investigated. In arriving at these effluent limitations guidelines, due consideration was given to keeping the costs of implementing the new technology to a minimum. Specifically, the effluent limitations guidelines were kept at values which would not result in excessive capital or operating costs to the industry. The capital and annual operating costs that would be required of the

industry to achieve BATEA was determined by a six-step process for each of the subcategories. It was first determined what treatment processes were already in place and currently being utilized by most of the plants. Secondly, a hypothetical treatment system was envisioned which, as an add-on to existing facilities would treat the effluent sufficiently to meet BATEA ELGs. Thirdly, the average plant size was determined by dividing the total industry production by the number of operation facilities. Fourth, a quasi-detailed engineering estimate was prepared on the cost of the components and the total capital cost of the add-on facilities for the average plant. Fifth, the annual operating, maintenance, capital recovery (basis 10 years straight line depreciation) and capital use (basis 7% interest) charges were determined. And sixth, the costs developed for the average facility were multiplied by the total number of facilities to arrive at the total capital and annual costs to the industry for each subcategory. The results are summarized in Table 108.

BATEA EFFLUENT LIMITATIONS GUIDELINES

The BATEA limitations have been established in accordance with the policies and definitions set forth at the beginning of this section. Further refinements of some of the technologies and the ELGs discussed in the previous Section IX of this study will be required. The subject BATEA limitations are summarized in Tables 93 to 107, along with their projected costs and treatment technologies.

Discussion by Subcategories

The rationale used for developing BATEA effluent limitations guidelines is summarized below for each of the major subcategories. All effluent limitations guidelines are presented on a "gross" or absolute basis since for the most part, removals are relatively independent of initial concentrations of contaminants. The ELGs are in kilograms of pollutant per metric ton of product or in pounds of pollutant per thousand pounds of product and in these terms only. The ELGs are not a limitation on flow, type of technology to be utilized, or concentrations to be achieved. These items are listed only as a guide to show the basis for the ELGs and may be varied as the discharger desires so long as the ELGs per unit of production are met.

Hot Forming - Primary

Following is a summary of the factors used to establish the BATEA Effluent Limitations Guidelines (ELGs) applying to the

Hot Forming Primary subcategory. As far as possible, the stated limits are based upon performance levels attained by at least one of the selected plants surveyed during this study. Where treatment levels can be improved by application of additional currently available control and treatment technology, the anticipated reduction of waste loads was included in the estimates.

The BATEA ELGs for the Hot Forming Primary subcategory, and the control and treatment technology to achieve these limits, are summarized in Table 93.

Flow. The five plants surveyed under this subcategory, four of which operated essentially on a once-through basis, had effluent flows ranging from 217 l/kkg (52 gal./ton) to 3,248 l/kkg (779 gal./ton) of product, for an average flow of 1,923 l/kkg (460 gal./ton). Although most plants sampled in this subcategory were operating on a once-through basis, evidence persists from plants sampled under other Hot Forming categories, that Hot Forming plants in general can operate using tight recycle system with blowdown rates of 10% or less than their once-through flow. Even within this subcategory, the plant discharging only 217 l/kkg (52 gal./ton) was blowing down at 8.5% of its application flow rate.

Therefore, based upon evidence from this and other Hot Forming subcategory plants visited, the BATEA ELGs for the Hot Forming Primary subcategory are based upon a discharge flow rate of 417 l/kkg (100 gal./ton) of product which would be the blowdown rate from a recycle system providing all contact water requirements including hot scarfing.
Suspended Solids. The five plants surveyed in this subcategory had effluent suspended solids concentrations ranging from 2 to 23 mg/l. The plants utilize chemical flocculation or deep bed filtration to achieve these low levels. In particular, the plant operating with the high degree of recycling was attaining 5 to 16 mg/l of TSS in water recirculated to the mill without using filtration. This high level of quality resulted from well-run chemical flocculation and clarification steps.

Based upon the performance of these plants, the BATEA ELG for suspended solids has been set at 0.0104 kg/kkg (0.0208 lbs of suspended solids per ton) of product, equivalent to 25 mg/l based on a discharge flow of 417 l/kkg (100 gal./ton). The recycle plant effluents contained 33% of this limit. It is anticipated that the industry can achieve the control and treatment technology necessary to meet this

TABLE 93

BATEA - EFFLUENT LIMITATIONS GUIDELINES

SUBCATEGORY Hot Forming - Primary

CRITICAL PARAMETERS	BATEA LIMITATIONS (5) Kg/KKg (1) (LB/1000 LB)	BATEA LIMITATIONS (5) mg/l (2)	CONTROL & TREATMENT TECHNOLOGY (3)	ESTIMATED (4) TOTAL COST $/KKg	ESTIMATED (4) TOTAL COST $/TON
Suspended Solids	0.0104	25	Scale pit followed by clarification with chemical flocculation; vacuum filtration of underflow; recycle to scale flume with minimal blowdown to control cycles of concentration.		
Oil and Grease	0.0042	10	Underflow baffles and continuous skimming equipment on scale pit, followed by natural adsorption to settling solids in clarifier and/or adsorption on filter media in filter.	0.097	0.088
pH	6.0 - 9.0		pH neutralization		
Flow	Most probable value for tight recycle system is 417 liters of effluent per kkg of product (100 gal/ton); excluding all non-contact cooling water.				

(1) Kilograms per metric ton of hot formed product produced or pounds per 1000 of hot formed product produced.
(2) Milligrams per liter based on a flow of 417 liters effluent per kkg of hot formed product (100 gal/ton).
(3) Technology listed is not necessarily all inclusive, nor does it reflect all possible combinations or permutations of treatment methods.
(4) Costs may vary ± 50%, depending on such factors as location, availability of land and chemicals, flow to be treated, treatment technology selected where competing alternatives exist, and extent of preliminary modifications required to accept the indicated control and treatment devices. Estimated total costs shown are only incremental required above those facilities which are normally existing within a plant and/or have been installed as a result of complying with BPCTCA standards.
(5) No additional load is allowed for hot scarfing since scarfer scrubber water is part of the total primary mill recycle system.

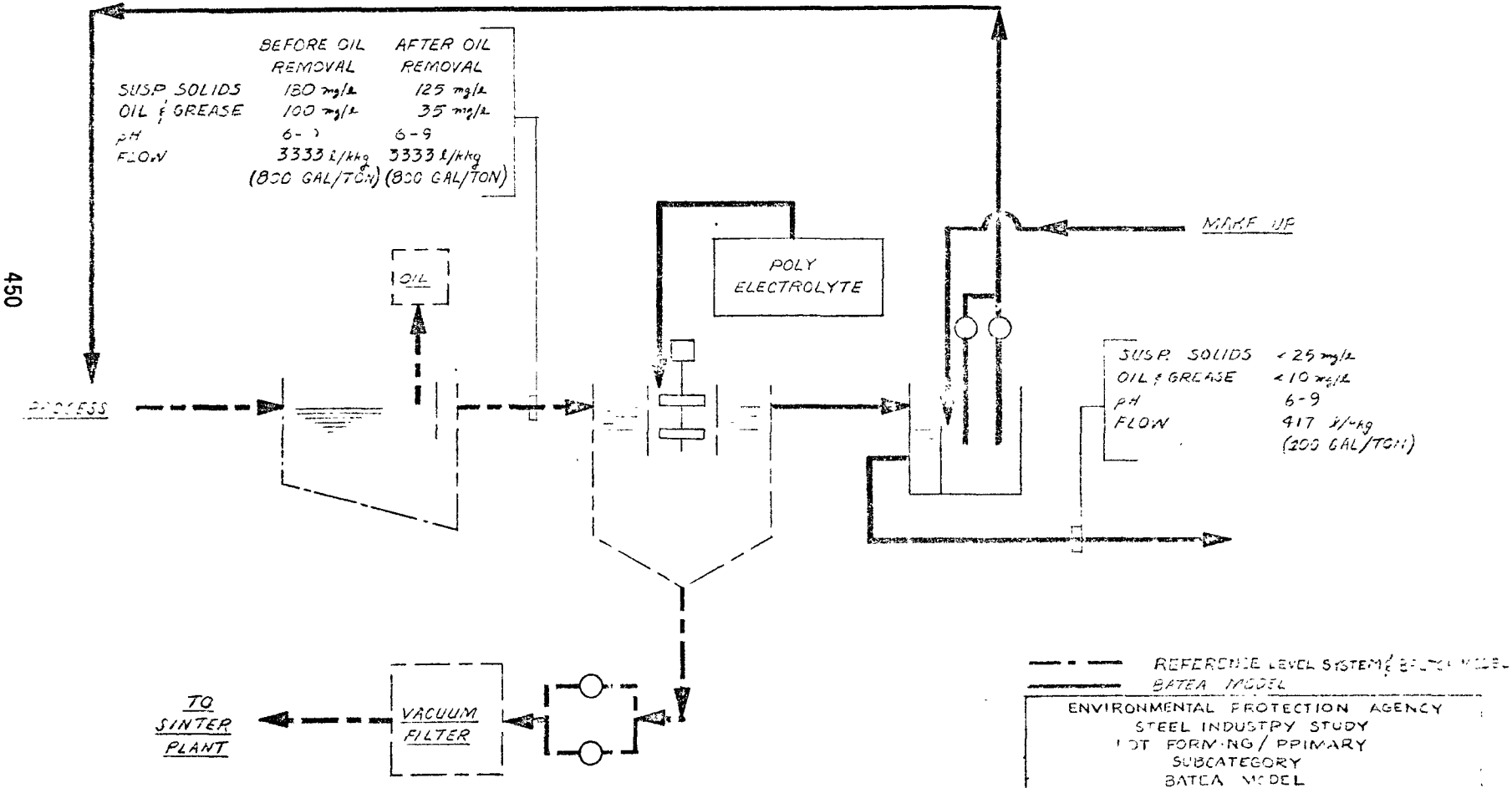

ENVIRONMENTAL PROTECTION AGENCY
STEEL INDUSTRY STUDY
HOT FORMING/PRIMARY
SUBCATEGORY
BATEA MODEL

REV. 11-22-74 5-22-74 FIGURE 92A

FIGURE 92.B

MODEL COST EFFECTIVENESS DIAGRAM
HOT FORMING - PRIMARY SUBCATEGORY

ANNUAL COST = BASED ON TEN YEAR CAPITAL RECOVERY
+ INTEREST RATE 7%
+ OPERATING COSTS INCLUDE LABOR, CHEMICALS & UTILITIES
+ MAINTENANCE COSTS BASED ON 3.5% OF CAPITAL COSTS
COST BASED ON 3628 KKG/DAY (4000 TONS/DAY) OF STEEL ROLLED
THIS GRAPH CANNOT BE USED FOR INTERMEDIATE VALUES

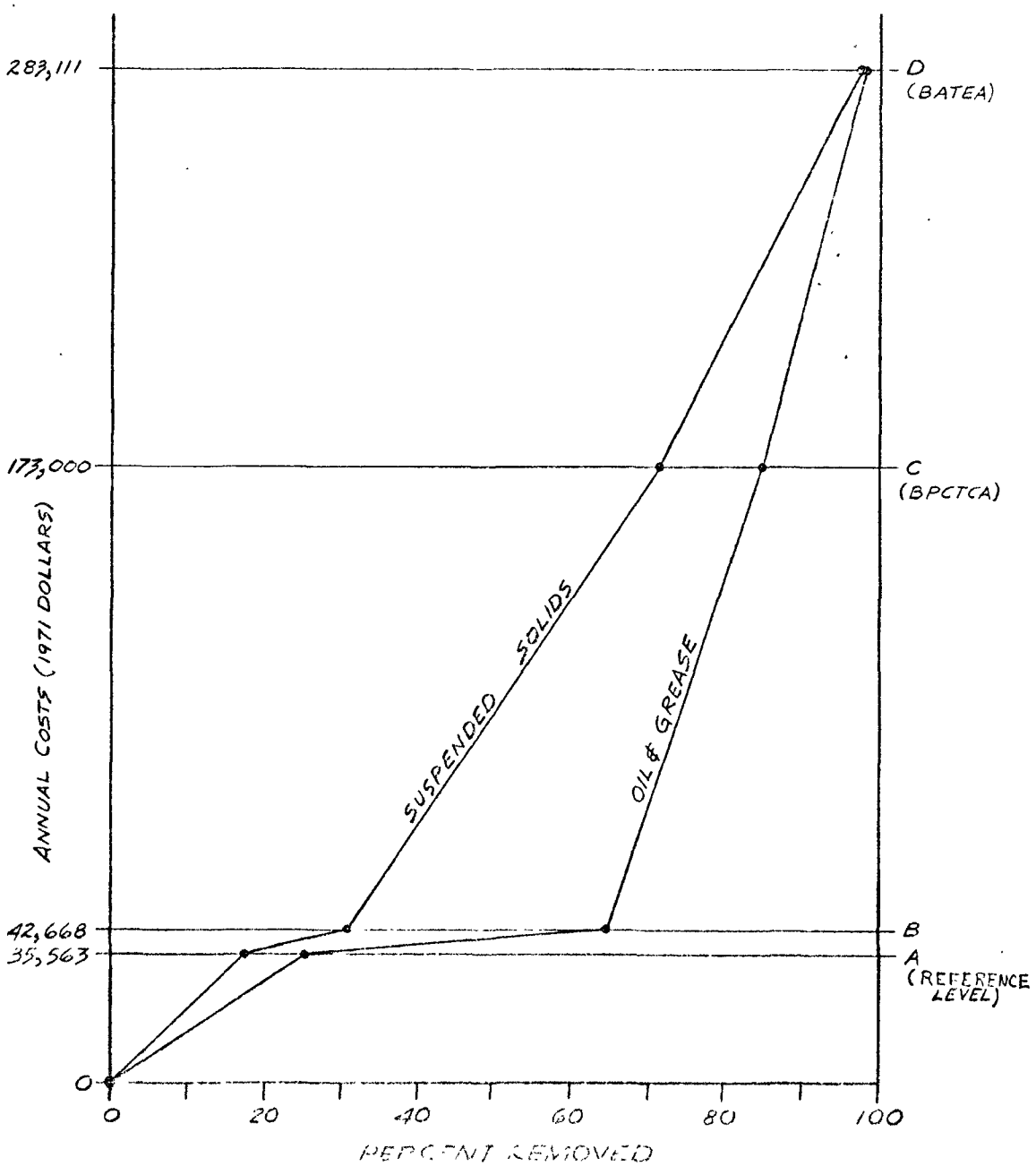

standard in a cost effective manner by 1983, and in fact, exemplary plants currently attain this level.

Oil and Grease. The five plants surveyed in this subcategory had effluent oil and grease concentrations ranging between 2 and 8 mg/l. The plants utilize skimming and deep bed filtration to achieve these low levels. However, the skimming systems were efficiently run so that oil concentrations in the feed to the filtration systems ranged between 7 and 12 mg/l. In particular, the plant on tight recycle was attaining an average concentration of 8 mg/l via clarification/flocculation.

Based upon the performance of these plants, the BATEA ELG for oil and grease has been set at 0.0042 kg/kkg (0.0083 lbs of oil and grease per ton) of product, equivalent to 10 mg/l based on a discharge flow of 417 l/kkg (100 gal./ton). Again, the plant on tight recycle is currently discharging only 62% of this limit. It is anticipated that the industry can provide the control and treatment technology necessary to meet this standard in a cost effective manner by 1983, and in fact, exemplary plants currently attain this level.

pH. All plants surveyed fell within the pH constraint range of 6.0 to 9.0, both for filter feeds and for final effluents, thus providing a basis for establishing this range as the BATEA ELG. Any plant falling outside this range can easily remedy the situation by applying appropriate neutralization procedures to the final effluent.

Hot Forming - Section

Following is a summary of the factors used to establish the BATEA effluent limitation guidelines (ELGs) applying to the Hot Forming Section subcategory. As far as possible, the stated limits are based upon performance levels attained by the selected plants surveyed during this study. Where treatment levels can be improved by application of additional currently available control and treatment technology, the anticipated reduction of waste loads was included in the estimates.

The BATEA ELGs for the Hot Forming Section subcategory, and the control and treatment technology to achieve these limits, are summarized in Table 94.

Flow. Of the ten process lines surveyed for this subcategory, four were practicing either tight or total recycle. Two of these plants had effluent flows of 584 l/kkg (140 gal./ton) and 1,555 l/kkg (373 gal./ton) of

TABLE 94

BATEA - EFFLUENT LIMITATIONS GUIDELINES

SUBCATEGORY Hot Forming - Section

CRITICAL PARAMETERS	BATEA LIMITATIONS Kg/KKg (1) (LB/1000 LB)	BATEA LIMITATIONS mg/l (2)	CONTROL & TREATMENT TECHNOLOGY (3)	ESTIMATED (4) TOTAL COST $/KKg	$/TON
Suspended solids	0.0156	25	Scale pit followed by clarification with chemical flocculation; vacuum filtration of underflow; recycle system from scale pit to scale flume and clarifier effluent to spray system via cooling tower.		
Oil and Grease	0.0063	10	Underflow baffles and continuous skimming equipment on scale pit followed by natural adsorption into settling solids in clarifier and/or adsorption on filter media in filter.	1.461	1.328
pH	6.0 - 9.0		pH neutralization		
Flow	Most probable value for tight recycle system is 626 liters of effluent per kkg of product (150 gal/ton); excluding all non-contact cooling water.				

(1) Kilograms per metric ton of hot formed product produced or pounds per 1000 pounds of hot formed product produced.
(2) Milligrams per liter based on a flow of 626 liters effluent per kkg of coated product (150 gal/ton).
(3) Technology listed is not necessarily all inclusive, nor does it reflect all possible combinations or permutations of treatment methods.
(4) Costs may vary ± 50%, depending on such factors as location, availability of land and chemicals, flow to be treated, treatment technology selected where competing alternatives exist, and extent of preliminary modifications required to accept the indicated control and treatment devices. Estimated total costs shown are only incremental required above those facilities which are normally existing within a plant and/or have been installed as a result of complying with BPCTCA standards.

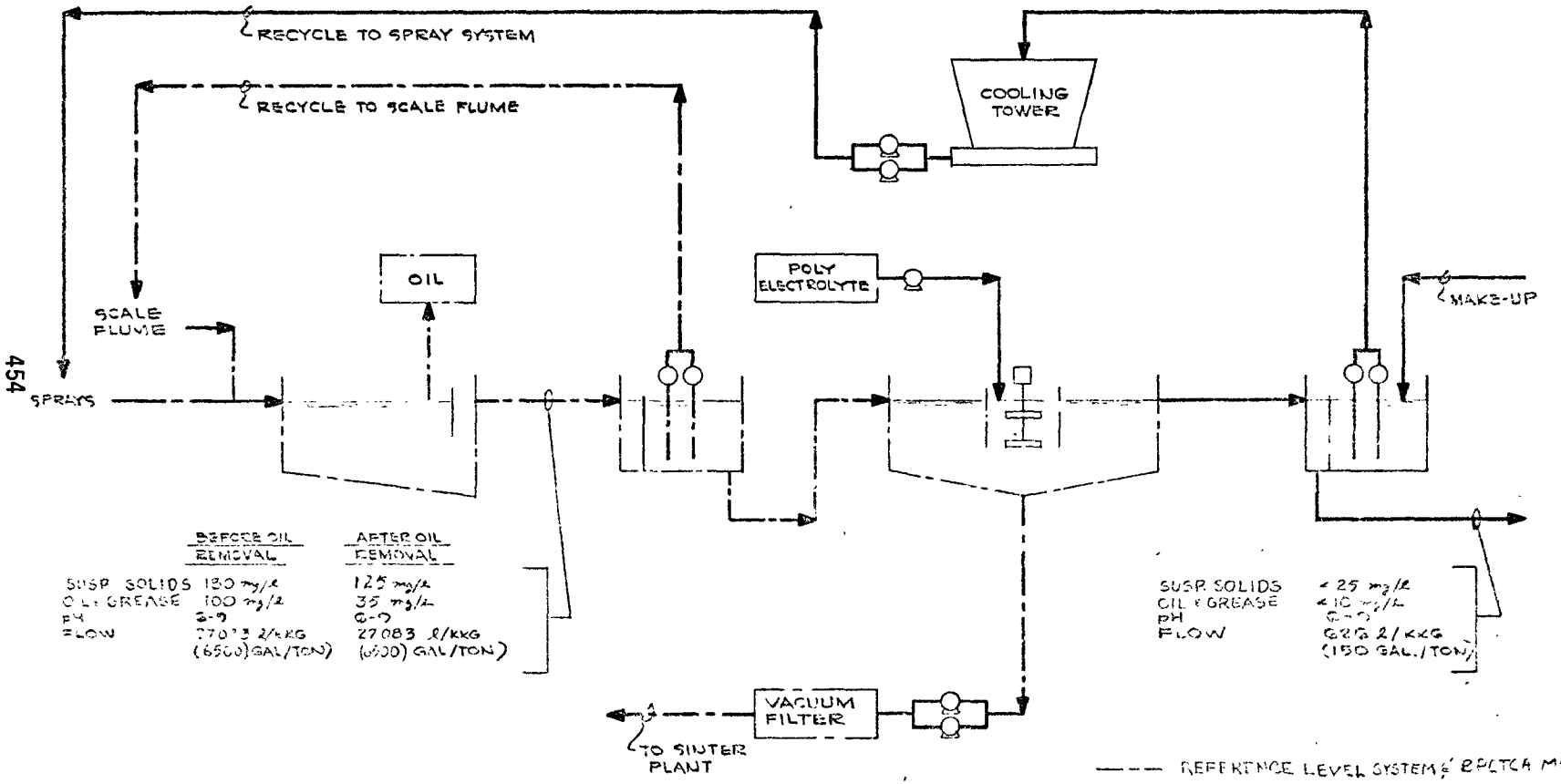

ENVIRONMENTAL PROTECTION AGENCY STEEL INDUSTRY STUDY HOT FORMING/SECTION SUBCATEGORY BATEA MODEL	
REV 5 22 74	FIGURE 93A

FIGURE 93B

MODEL COST EFFECTIVENESS DIAGRAM
HOT FORMING - SECTION SUBCATEGORY

ANNUAL COSTS = BASED ON TEN YEAR CAPITAL RECOVERY
+ INTEREST RATE 7%
+ OPERATING COSTS INCLUDE LABOR, CHEMICALS & UTILITIES
+ MAINTENANCE COSTS BASED ON 3.5% OF CAPITAL COSTS
COSTS BASED ON 1,179 KKG/DAY (1300 TONS/DAY) OF STEEL ROLLED
THIS GRAPH CANNOT BE USED FOR INTERMEDIATE VALUES

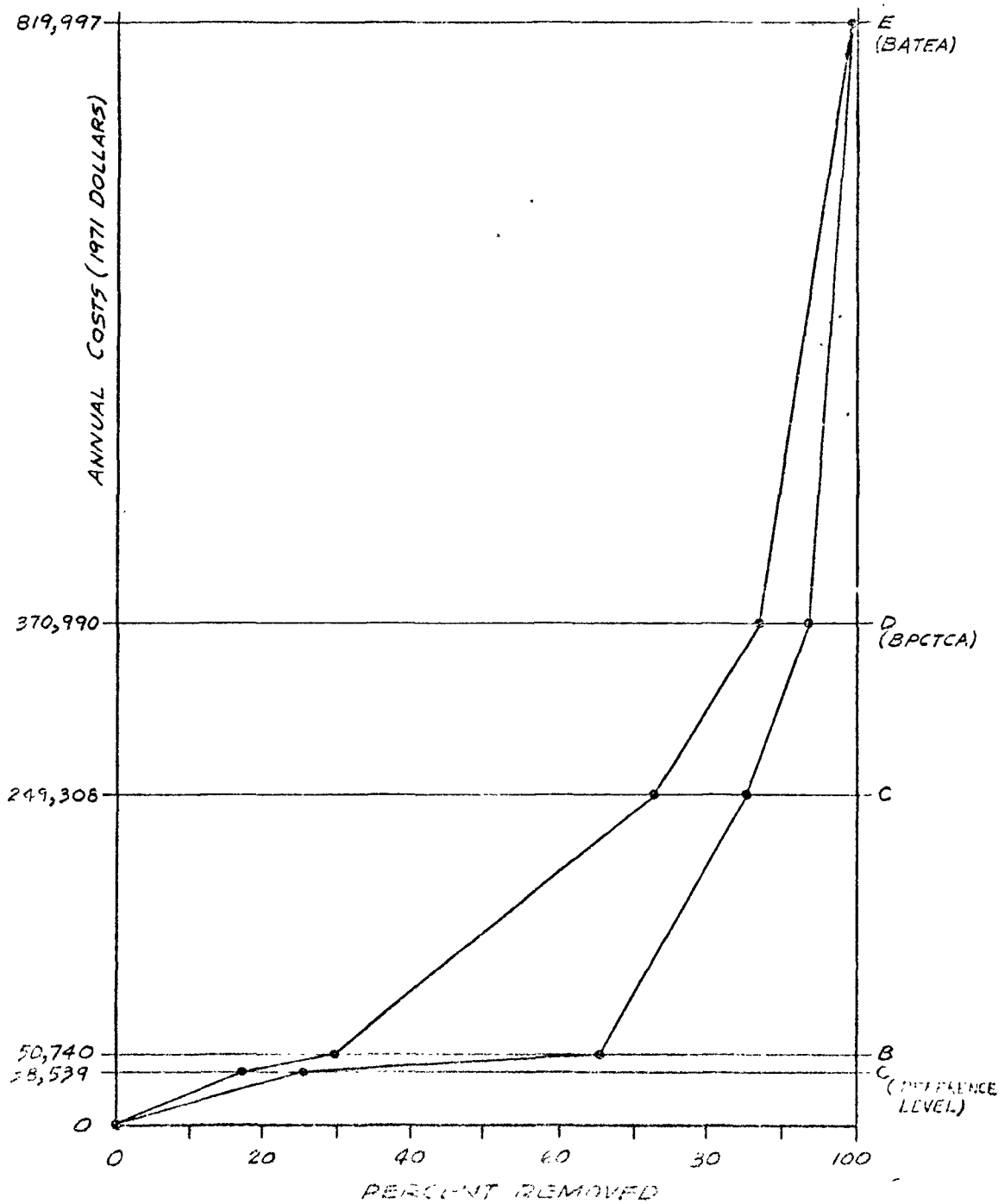

product. The third plant containing two process lines had zero aqueous discharge, with the only "blowdown" being the water content of the wet sludges generated by the treatment processes.

Because those plants utilizing tight or total recycle are discharging significantly less water than those operating on a once-through basis, it is felt that these four lines are all practicing BATEA technology. Therefore, the BATEA ELGs are based on flows set at 626 l/kkg (150 gal./ton) of product, excluding all noncontact cooling water. This value is justified based upon the fact that several of the section subcategory plants surveyed are already practicing recycle technology. In fact, one plant operating two bar mills was recycling so effectively that no aqueous discharges were required. This high degree of load reduction was considered to be a special case, difficult to apply across the entire section subcategory. For this reason, zero aqueous discharge was not recommended as the BATEA ELG.

Suspended Solids. Suspended solids concentrations from the two plants surveyed which were using tight recycle with blowdown were 29 and 10 mg/l. Treatment technology to achieve these levels is sedimentation/clarification and sedimentation/clarification/filtration, respectively.

Based upon the effluent concentrations achieved and the treatment technology used at these and other Hot Forming subcategory plants, it is felt that several plants are employing BATEA technology. Thus the BATEA ELG for suspended solids is set at 0.0156 kg/kkg (0.0312 lbs of suspended solids per ton) of product, equivalent to 25 mg/l in a 626 l/kkg (150 gal./ton) discharge flow rate. This value is justified since two of the three recycle plants surveyed (including the zero discharge lines) already meet this standard, the third exceeds the limit by only 8%, and a fourth plant on a relatively loose recycle (60% blowdown) achieves the limit by using filtration of the blowdown down to 2 mg/l suspended solids.

In determining this standard, the total recycle plant recirculated water quality was purposely excluded in setting effluent treatment levels. This plant carries a concentration of 47 mg/l suspended matter back to the mills in its recycle loop. However, since there is no discharge, that concentration is irrelevant from a discharge standard point of view and is limited only by a plant process equipment's ability to handle higher concentrations. In fact, as a plant goes to total recycle, they may find it advantageous to carry a higher suspended solids

concentration in the recycle stream, so as to minimize size of treatment equipment.

Oil and Grease. Oil and grease concentrations from the two plants surveyed which were using tight recycle with blowdown were 8.3 and 9.8 mg/l. Treatment technology used to achieve these values is skimming/clarification and skimming/clarification/ filtration, respectively.

Based upon the effluent concentrations achieved, and the treatment technology used, it is felt that several plants are employing BATEA technology. Thus, the BATEA ELG for oil and grease is set at 0.0063 kg/kkg (0.0125 lbs of oil per ton) of product, equivalent to 10 mg/l in a discharge flow of 626 l/kkg (150 gal./ton). This value is justified since three of the five plants visited already meet this standard.

Again, in determining this standard, the total recycle plant was excluded from the evaluation, since the level of oil it carries in the recycle loop is irrelevant as long as there is no discharge. However, the plant was utilizing efficient oil skimmers, and the water recycled to the mills contained only 2 to 5 mg/l oils and greases.

pH. All of the plants surveyed fell within the pH constraint range of 6.0 to 9.0, thus providing a basis for establishing the range as the BATEA ELG. Any plant falling outside of this range can readily remedy the situation by applying appropriate neutralization procedures to the final effluent.

Hot Forming - Flat

Following is a summary of the factors used to establish the BATEA effluent limitation guidelines (ELGs) applying to the Hot Forming Flat subcategory. As far as possible, the stated limits are based upon performance levels attained by the selected plant surveyed during this study. Where treatment levels can be improved by application of additional currently available control and treatment technology, the anticipated reduction of waste loads was included in the estimates.

The BATEA ELGs for the Hot Forming Flat, Hot Strip and Sheet subcategory, and the control and treatment technology to achieve these limits, are summarized in Table 95. The BATEA ELG's for the Hot Forming - Flat - Plate subcategory, and the control treatment technology to achieve these limits, are summarized in Table 96.

TABLE 95

BATEA - EFFLUENT LIMITATIONS GUIDELINES

SUBCATEGORY Hot Forming - Flat - Hot Strip & Sheet

CRITICAL PARAMETERS	BATEA LIMITATIONS Kg/KKg (LB/1000 LB)(1)	BATEA LIMITATIONS mg/l(2)	CONTROL & TREATMENT TECHNOLOGY(3)	ESTIMATED(4) TOTAL COST $/KKg	$/TON
Suspended Solids	0.0156	25	Scale pit followed by clarification with chemical flocculation; vacuum filtration of underflow; recycle system with scale pit effluent to scale flume and clarifier effluent to spray system via cooling tower.		
Oil and Grease	0.0063	10	Underflow baffles and continuous skimming equipment on scale pit, followed by natural adsorption into settling solids in clarifier and/or adsorption of filter media in filter.	1.113	1.012
pH	6.0-9.0		pH neutralization		
Flow	Most probable value for tight recycle system is 626 liters of effluent per kkg of product (150 gal/ton); excluding all non-contact cooling water.				

(1) Kilograms per metric ton of hot formed product produced or pounds per 1000 pounds of hot formed product produced.
(2) Milligrams per liter based on a flow of 626 liters effluent per kkg of hot formed product (150 gal/ton).
(3) Technology listed is not necessarily all inclusive, nor does it reflect all possible combinations or permutations of treatment methods.
(4) Costs may vary ± 50%, depending on such factors as location, availability of and chemicals, flow to be treated, treatment technology selected where competing alternatives exist, and extent of perliminary modifications required to accept the indicated control and treatment devices. Estimated total costs shown are only incremental required above those facilities which are normally existing within a plant and/or have been installed as a result of complying with BPCTCA standards.

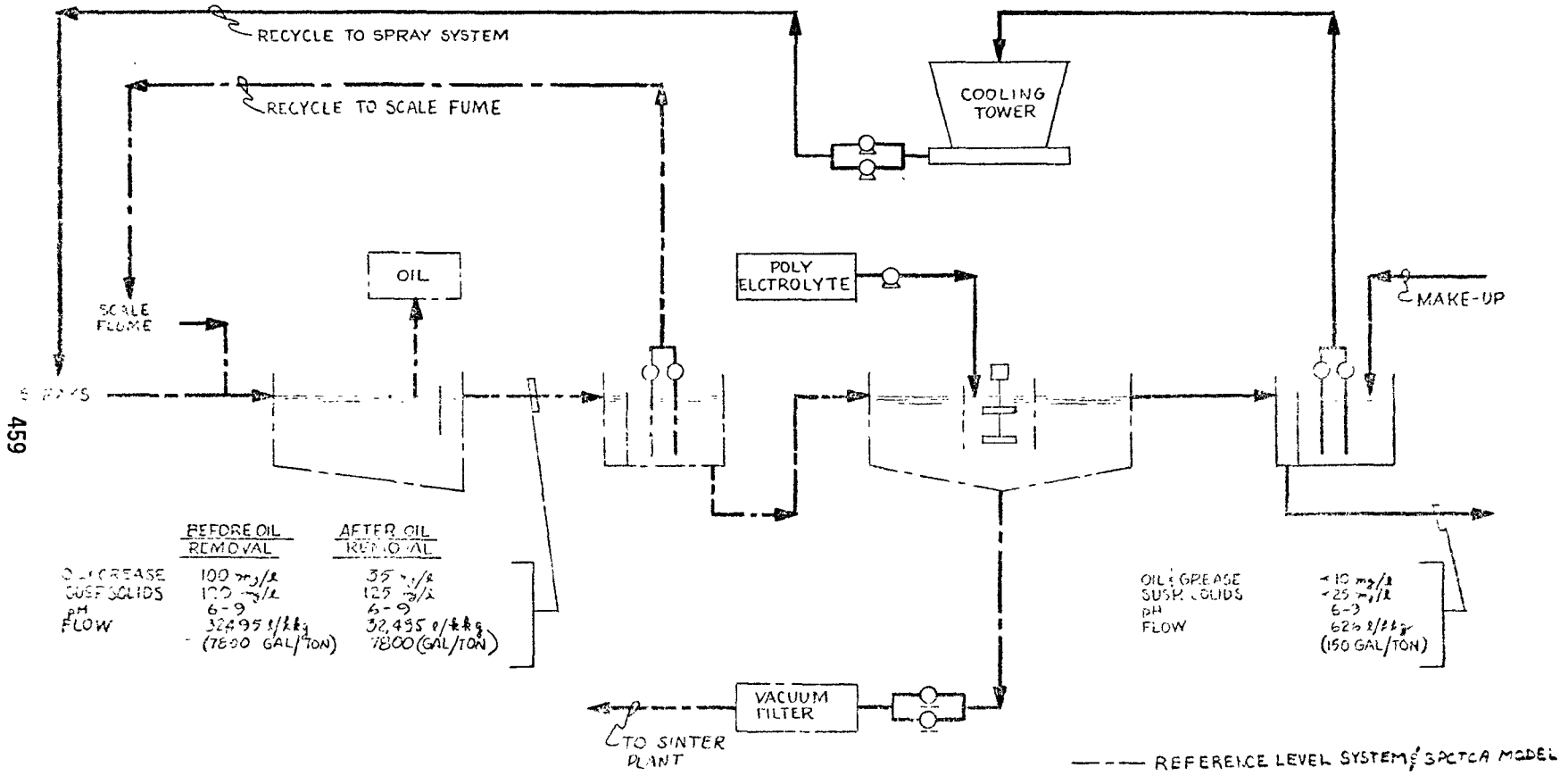

ENVIRONMENTAL PROTECTION AGENCY
STEEL INDUSTRY STUDY
HOT FORMING/ FLAT-HOT STRIP & SHEET
SUBCATEGORY
BATEA MODEL

REV	12-3-74 5-12-75	FIGURE 94A

FIGURE 74B

MODEL COST EFFECTIVENESS DIAGRAM
HOT FORMING - FLAT - HOT STRIP AND SHEET
SUBCATEGORY

ANNUAL COSTS = BASED ON TEN YEAR CAPITAL RECOVERY
+ INTEREST RATE 7%
+ OPERATING COSTS INCLUDE LABOR, CHEMICALS & UTILITIES
+ MAINTENANCE COSTS BASED ON 2.5% OF CAPITAL COSTS
COST BASED ON 3447 KKG/DAY (3800 TONS/DAY) OF STEEL ROLLED
THIS GRAPH CANNOT BE USED FOR INTERMEDIATE VALUES

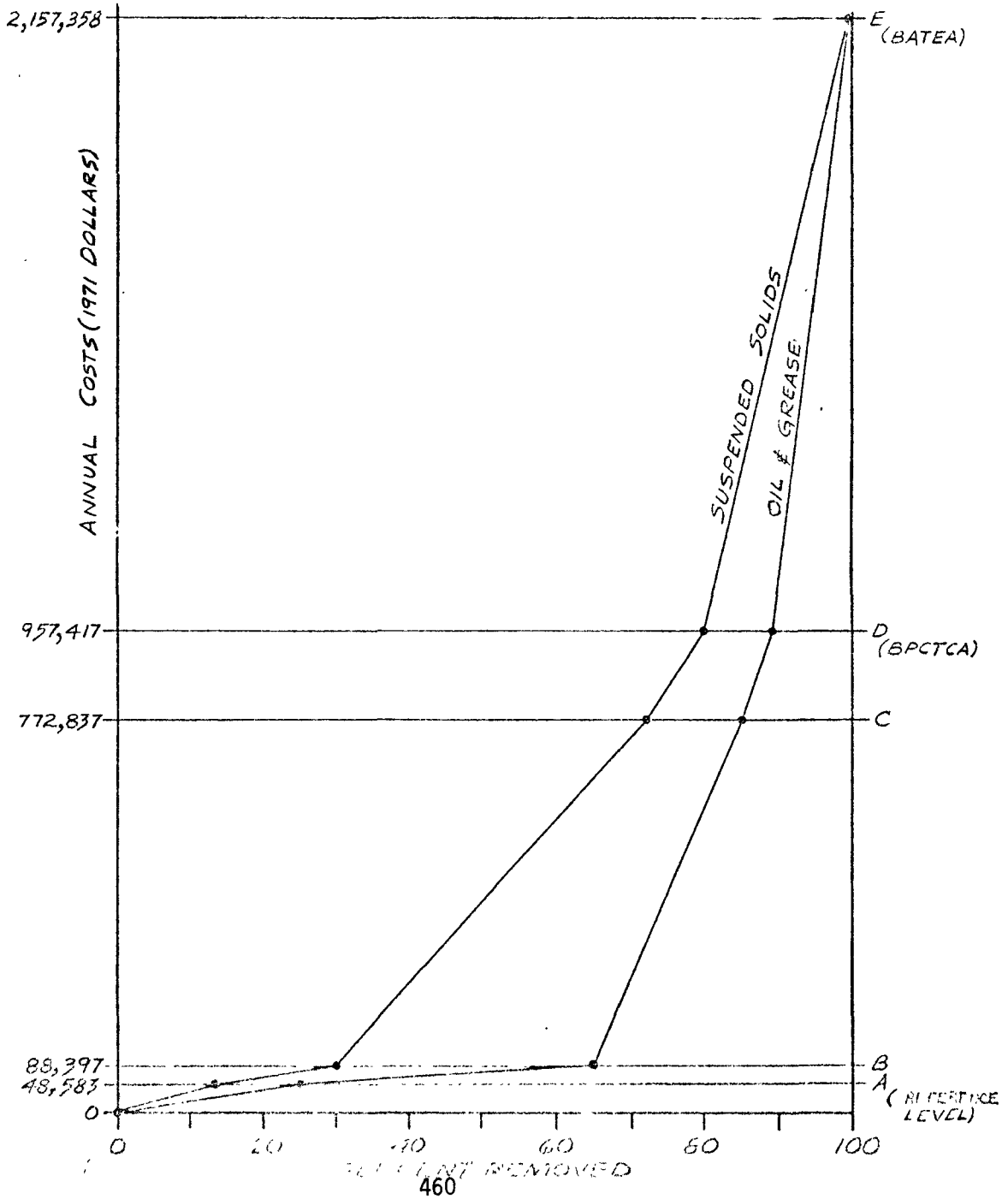

TABLE 96

BATEA - EFFLUENT LIMITATIONS GUIDELINES

SUBCATEGORY Hot Forming - Flat - Plate

CRITICAL PARAMETERS	BATEA LIMITATIONS Kg/KKg (1) (LB/1000 LB)	BATEA LIMITATIONS mg/l (2)	CONTROL & TREATMENT TECHNOLOGY (3)	ESTIMATED (4) TOTAL COST $/KKg.	ESTIMATED (4) TOTAL COST $/TON
Suspended Solids	0.0156	25	Scale pit followed by clarification with chemical flocculation; vacuum filtration of underflow; recycle system with scale pit effluent to scale flume and clarifier effluent to spray system via cooling tower.	1.316	1.196
Oil and Grease	0.0063	10	Underflow baffles and continuous skimming equipment on scale pit, followed by natural adsorption into settling solids in clarifier and/or adsorption of filter media in filter.		
pH	6.0 - 9.0		pH neutralization		
Flow	Most probable value for tight recycle system is 626 liters of effluent per kkg of product (150 gal/ton); excluding all non-contact cooling water.				

(1) Kilograms per metric ton of hot formed product produced or pounds per 1000 pound of hot formed product.
(2) Milligrams per liter based on a flow of 626 liters effluent per kkg of hot formed product (150 gal/ton).
(3) Technology listed is not necessarily all inclusive, nor does it reflect all possible combinations or permutations of treatment methods.
(4) Costs may vary ± 50%, depending on such factors as location, availability of land and chemicals, flow to be treated, treatment technology selected where competing alternatives exist, and extent of preliminary modifications required to accept the indicated control and treatment devices. Estimated total costs shown are only incremental required above those facilities which are normally existing within a plant and/or have been installed as a result of complying with BPCTCA standards.

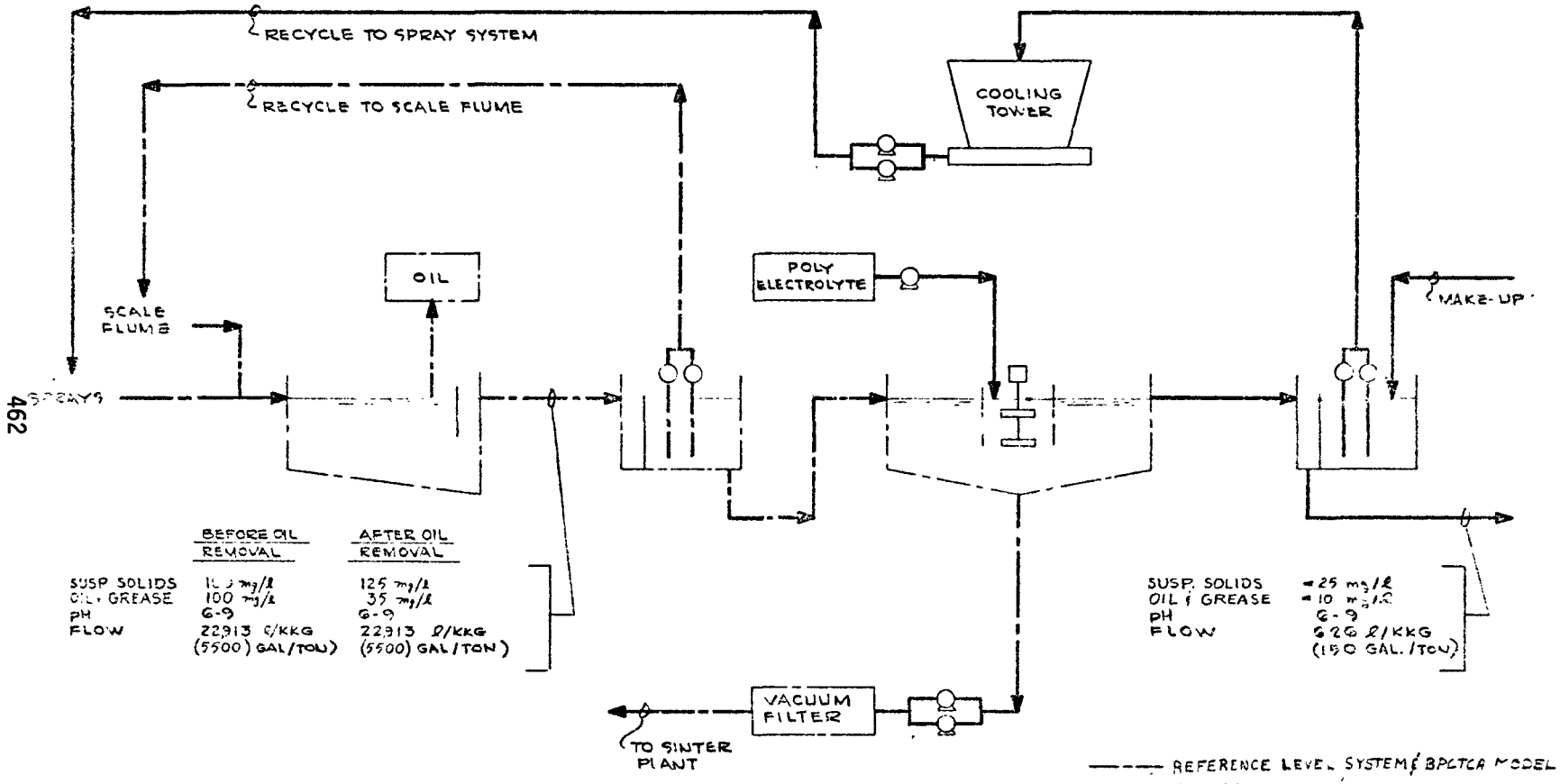

ENVIRONMENTAL PROTECTION AGENCY STEEL INDUSTRY STUDY HOT FORMING / FLAT - PLATE SUBCATEGORY BATEA MODEL		
REV.	12-5-74 5-22-75	FIGURE 95A

FIGURE 9.5 B

MODEL COST EFFECTIVENESS DIAGRAM

HOT FORMING - FLAT-PLATE SUBCATEGORY

ANNUAL COSTS = BASED ON TEN YEAR CAPITAL RECOVERY
+ INTEREST RATE 7%
+ OPERATING COSTS INCLUDE LABOR, CHEMICALS & UTILITIES
+ MAINTENANCE COSTS BASED ON 3.5% OF CAPITAL COSTS

COST BASED ON 181 KKG/DAY (2000 TONS/DAY) OF STEEL ROLLED

THIS GRAPH CANNOT BE USED FOR INTERMEDIATE VALUES

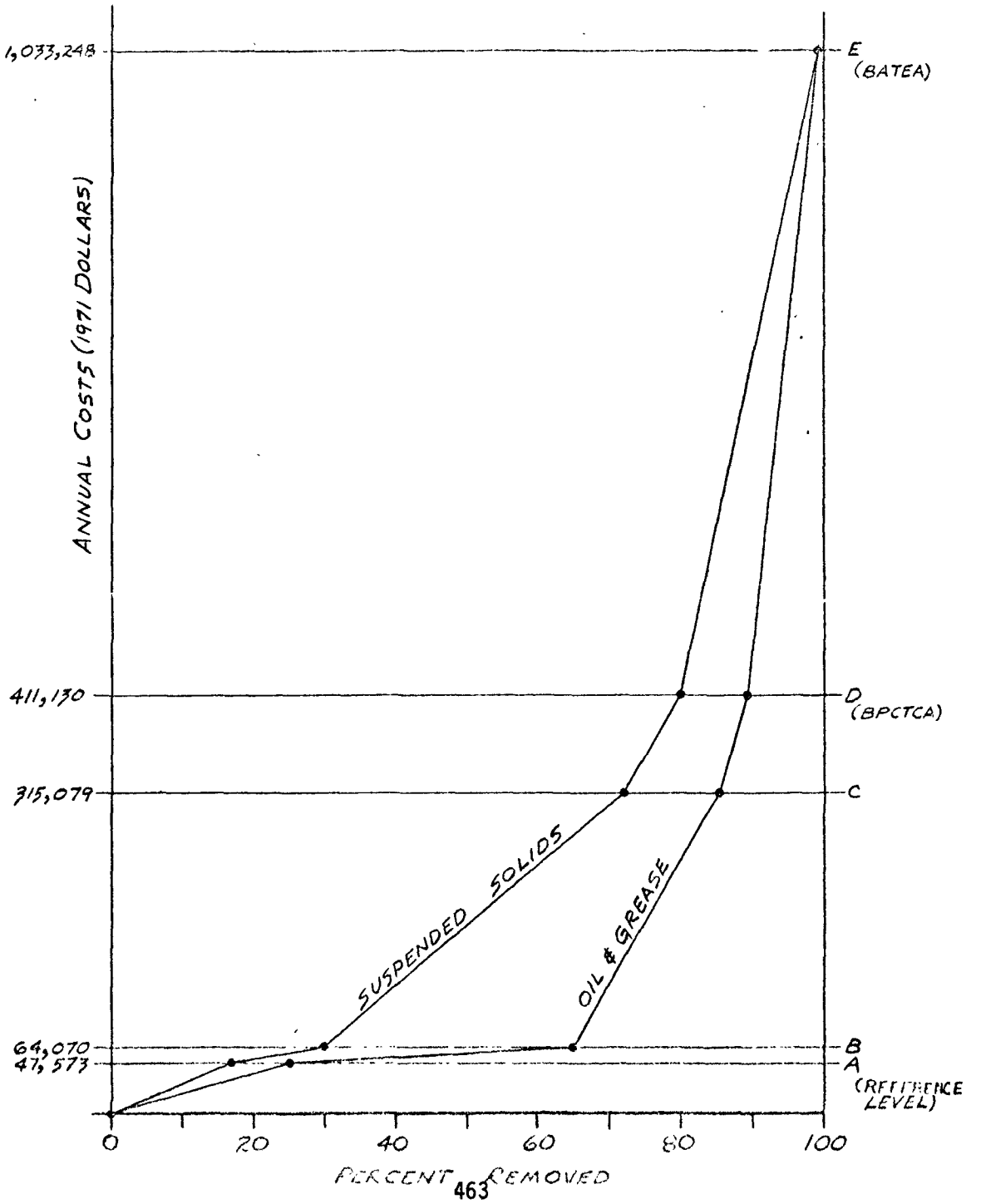

Flow. Of the five plants surveyed, three were practicing either tight or total recycle. Two of these plants, a plate mill and a wide strip mill, had effluent flows of 634 l/kkg (152 gal./ton) and 204 l/kkg (49 gal./ton) of product, respectively. The third recycle plant, a narrow strip mill, has zero aqueous discharge.

Because those plants utilizing tight or total recycle are discharging significantly less water than those operating on a once-through basis, it is felt that these three plants are all practicing BATEA technology. Therefore, the BATEA ELGs for plate and strip/sheet mills are based on discharge flow rates set at 626 l/kkg (150 gal./ton) of product, excluding all noncontact cooling water. This value is justified on the basis that three of the five plants surveyed are currently practicing the technology necessary to achieve this discharge flow, and are also achieving the guidelines. In addition, it is anticipated that all once-through or more limited recycle systems have sufficient time to achieve this standard in a cost effective manner by 1983.

Suspended Solids. Suspended solids concentrations from the two plants practicing tight recycle, but with blowdown were 4 and 5 mg/l. Treatment technology used to achieve these levels was sedimentation/filtration and sedimentation/clarification, respectively.

Based upon the effluent concentrations achieved and the treatment technology used it is felt that several plants are employing BATEA technology. Thus, the BATEA ELG for suspended solids is set at 0.0156 kg/kkg (0.0312 lbs of suspended solids per ton) of product, equivalent to 25 mg/l in a discharge flow of 626 l/kkg (150 gal./ton). This value is justified since three of the five plants surveyed already meet this standard.

In determining this standard, the total recycle plant recirculated water quality was purposely excluded in setting effluent treatment levels. This plant carries a concentration of 54 mg/l suspended matter back to the mill in its recycle loop. However, since there is no discharge, that concentration is irrelevant from a discharge standard point of view and is limited only by a plant process equipment's ability to handle the higher concentrations. In fact, as a plant goes to total recycle, they may find it advantageous to carry a higher suspended solids concentration in the recycle stream, so as to minimize size of treatment equipment.

Oil and Grease. Oil and grease concentrations from the two plants surveyed using tight recycle with blowdown were 6.3 and 7.9 mg/l. Treatment technology used to achieve these values were skimming/filtration and skimming/clarification, respectively.

Based upon the effluent concentrations achieved, and the treatment technology used, it is felt that several plants are employing BATEA technology. Thus, the BATEA ELG for oil and grease is set at 0.0063 kg/kkg (0.0126 lbs of oil per ton) of product, equivalent to 10 mg/l in a discharge flow of 626 l/kkg (150 gal./ton). This value is justified since three of the five plants surveyed already meet this standard and there is sufficient time for all plants to achieve this limit in a cost effective manner by 1983.

Again, in determining this standard, the water quality of the total recycle plant was excluded from the evaluation since the level of oil it carries in the recycle loop is irrelevant as long as there is no discharge.

pH. All of the plants surveyed fell within the pH constraint range of 6.0 to 9.0, thus providing the basis for establishing the range as the BATEA ELG. Any plant falling outside of this range can readily remedy the situation by applying appropriate neutralization procedures to the final effluent.

Pipe and Tubes

Currently, three of the six exemplary pipe and tube installations surveyed practice very low or zero aqueous discharge. The recommended BATEA limitation is not, however, "no discharge of process wastewater pollutants," since control and treatment technology required would be highly dependent upon available space and a suitable climate. Emphasis should be placed upon attaining the minimum possible discharge flow through extensive recycle as in the BATEA technologies for the Hot Forming subcategories. The BATEA limitations have been based on a discharge flow rate of 626 l/kkg (150 gal/ton) of product which would be the blowdown from a recycle system providing all contact water requirements of the operation. The BATEA ELG's for the Pipe and Tubes subcategory and the control and treatment technology to achieve these limits are summarized in Table 97.

Suspended Solids. Based on the effluent loadings achieved through the use of tight recycle systems, and treatment of blowdowns via flocculation and clarification for the Hot

TABLE 97

BATEA - EFFLUENT LIMITATIONS GUIDELINES

SUBCATEGORY Pipe and Tubes

CRITICAL PARAMETERS	BATEA LIMITATIONS Kg/KKg (LB/1000 LB)[1]	BATEA LIMITATIONS mg/l[2]	CONTROL & TREATMENT TECHNOLOGY[3]	ESTIMATED[4] TOTAL COST $/KKg	ESTIMATED[4] TOTAL COST $/TON
Suspended solids	0.0156	25	Scale pit followed by clarification with chemical flocculation; vacuum filtration of underflow; recycle system from scale pit to scale flume and clarifier effluent to spray system via cooling tower.	1.008	0.917
Oil and Grease	0.0063	10	Underflow baffles and continuous skimming equipment on scale pit followed by natural adsorption into settling solids in clarifier and/or adsorption on filter media in filter.		
pH	6.0-9.0		pH neutralization		
Flow	Most probable value for tight recycle system is 626 liters per kkg of pipe and tubes (150 gal/ton) excluding all non-contact cooling water.				

(1) Kilograms per metric ton of pipe and tube produced or pounds per 1000 pounds of pipe and tube produced.
(2) Milligrams per liter based on 626 liters effluent per kkg of pipe and tube produced (150 gal/ton).
(3) Available technology listed is not necessarily all inclusive nor does it reflect all possible combinations or permutations of treatment methods.
(4) Costs may vary some depending on such factors as location, availability of land and chemicals, flow to be treated, treatment technology selected where competing alternatives exist, and extend of preliminary modifications required to accept the indicated control and treatment devices. Estimated total costs shown are only incremental costs required above those facilities which are normally existing within a plant and/or have been installed as a result of complying with BPCTCA standards.

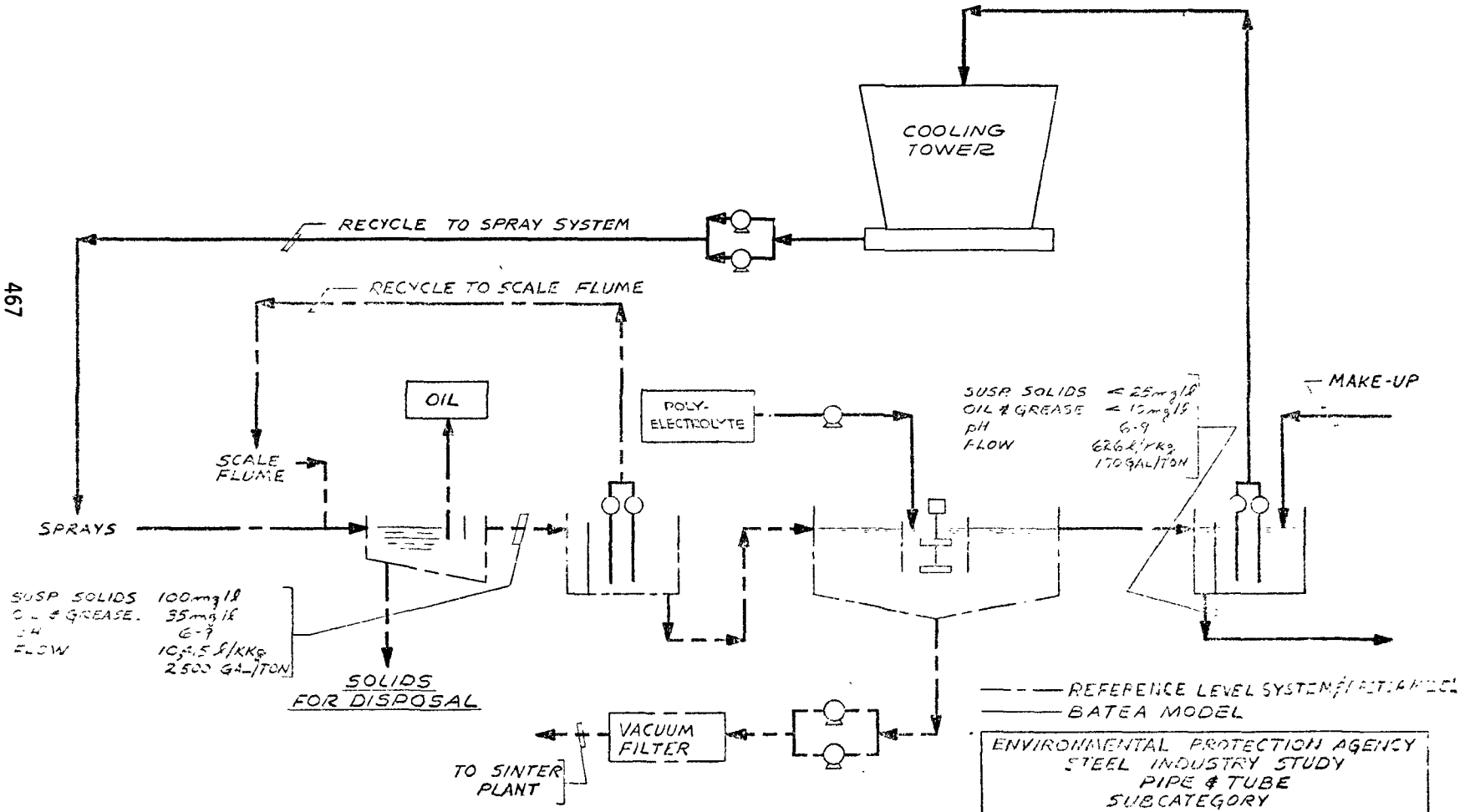
COOLING TOWER
RECYCLE TO SPRAY SYSTEM
RECYCLE TO SCALE FLUME
OIL
POLY-ELECTROLYTE
SCALE FLUME
SPRAYS
SUSP SOLIDS 100mg/l
OIL & GREASE 35mg/l
pH 6-9
FLOW 10,415 l/KKg
2500 GAL/TON
SOLIDS FOR DISPOSAL
SUSP SOLIDS < 25mg/l
OIL & GREASE < 10mg/l
pH 6-9
FLOW 626 l/KKg
170 GAL/TON
MAKE-UP
VACUUM FILTER
TO SINTER PLANT
REFERENCE LEVEL SYSTEM
BATEA MODEL
ENVIRONMENTAL PROTECTION AGENCY
STEEL INDUSTRY STUDY
PIPE & TUBE
SUBCATEGORY
BATEA MODEL
REV.
FIGURE 96A

FIGURE 46 B

MODEL COST EFFECTIVENESS DIAGRAM
PIPE & TUBES SUBCATEGORY

ANNUAL COSTS • BASED ON TEN YEAR CAPITAL RECOVERY
+ INTEREST RATE 7%
+ OPERATING COSTS INCLUDE LABOR, CHEMICALS & UTILITIES
+ MAINTENANCE COSTS BASED ON 2.5% OF CAPITAL COSTS
COSTS BASED ON 363 MKG/DAY (400 TONS/DAY) PRODUCTION
THIS GRAPH CANNOT BE USED FOR INTERMEDIATE VALUES

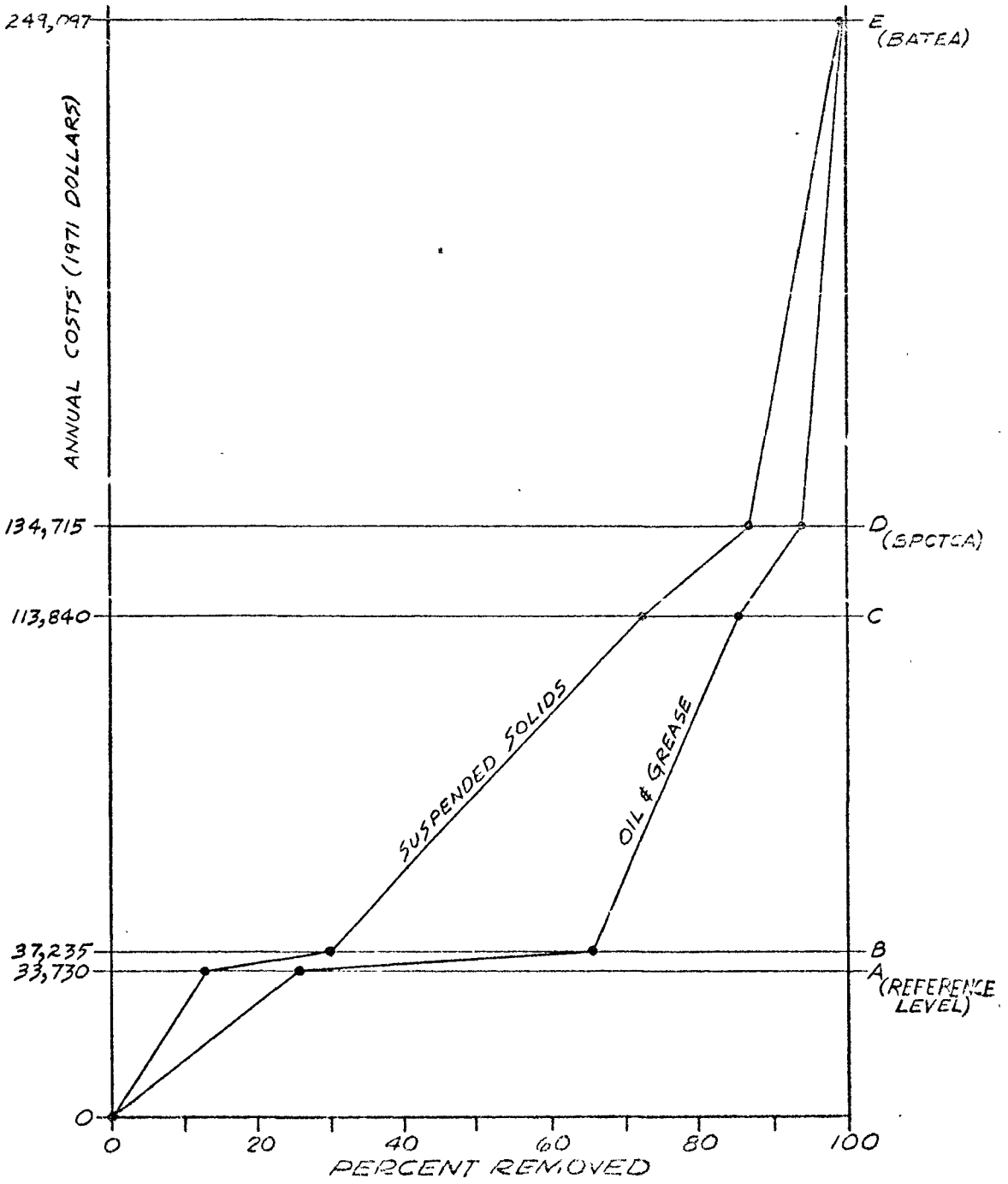

Forming subcategories, the BATEA for suspended solids from Pipe and Tube subcategory operations has been set at 0.0156 kg/kkg (0.0312 lbs/ton) of product, equivalent to 25 mg/l in a discharge flow of 626 l/kkg (150 gal./ton). Although none of the plants currently discharging wastewater approaches this limit, the three plants without discharges are in compliance. In addition, one of these plants is recycling water containing only 19 mg/l, while the river water intake suspended solids concentration averages 56 mg/l. This plant, and others from Hot Forming subcategories, demonstrate the applicability of the recommended technologies and the attainability of the limits with currently available equipment.

Oil and Grease. Recommended BATEA limitations for oil and grease from Pipe and Tube subcategory operations have been established at 0.0063 kg/kkg (0.0126 lbs/ton) of product, equivalent to 10 mg/l in a discharge volume of 626 l/kkg (150 gal./ton). The three plants currently using tight recycle systems without blowdown are recirculating water containing from 3.0 to 4.3 mg/l oil and grease, while the three plants operating once-through systems also skim their wastewaters to attain concentrations of less than 10 mg/l, albeit in much higher flows than the BATEA limits permit.

Thus, it is evident that the recommended limits are attainable with currently available equipment and technology.

pH. The BATEA limitations for pH require all effluent discharges to be in the 6.0 to 9.0 range. Any plant falling outside this range can remedy the situation by applying appropriate neutralization procedures to the final effluent. All surveyed plants having discharges were meeting the pH limitations.

Pickling - Batch Sulfuric Acid - Concentrates and Rinse Water Subcategories

Of the six surveyed plants utilizing batch sulfuric acid pickling, three were practicing recovery of sulfuric acid via atmospheric or vacuum crystallization using commercially available recovery systems. Furthermore, two of these three plants were consuming all rinse waters internally. In both cases, fresh water is used as final spray rinse water only. It is collected in a spray rinse tank, transferred to a standing rinse or dip tank where it tends to concentrate somewhat, and ultimately is used to make up evaporative losses at the main pickling tank, or as dilutant water when each fresh batch of pickling solution is made up. Each

batch of spent pickle liquor, containing its share of the rinse waters, is in turn transferred to the acid recovery system for treatment and recovery of unreacted sulfuric acid.

The waste treatment practices for the recovery and reuse of spent sulfuric acid pickle solutions center around the removal of ferrous sulfate heptahydrate from the liquor via crystallization. Two systems are used. In one system hot spent acid is agitated in an open top vessel to evaporate surplus water and cool the spent acid. Refrigerated water is then circulated through indirect cooling coils to further cool the acid and crystallize the ferrous sulfate heptahydrate from the now super-saturated solution. The crystals are allowed to settle and are removed. Fresh acid is added to raise the acid concentration to the desired level and the acid returned to the pickle tank for reuse. There is no liquid discharge from this system.

In the second system, spent hot sulfuric acid is pumped into a vacuum evaporator where the solution is cooled and concentrated, and crystallization takes place. The acid is then pumped to a thickener to concentrate the crystals prior to removal via a centrifuge. The recovered acid is discharged into a storage tank where fresh acid is added to raise the concentration to the desired level for pickling. The liquid discharge from this system is comprised of the condensate from the evaporator, which is of such quality that it may be mixed with the noncontact cooling water and reused as rinse water. A sample of this mixture collected at the only plant of this type surveyed was of a higher quality than of the cooling water alone. The end result is a zero waste load for this operation also, provided that the condensate is reused as described.

One of the major problems of sulfuric acid recovery plants is the sale or disposal of the recovered crystalline ferrous sulfate heptahydrate. A market for this product exists among chemical processors, paint and pigment manufacturers, and sewage treatment plants, but this market currently consumes only a fraction of the potential ferrous sulfate heptahydrate production if this technique becomes more widespread. It is not possible to accurately predict the extent to which this market will expand in response to an increased supply. The high degree of solubility of the crystals makes their disposal by landfill undesirable unless the material is first converted to an insoluble form such as the monohydrate or is placed in a lined and drained disposal area. What may be required to best recover values from this by-product is a commercially feasible means of converting

TABLE 98

BATEA - EFFLUENT LIMITATIONS GUIDELINES

SUBCATEGORY Pickling - Sulfuric Acid - Batch - Concentrates

CRITICAL PARAMETERS	BATEA LIMITATIONS Kg/KKg[1] (LB/1000 LB)	BATEA LIMITATIONS mg/l[2]	CONTROL & TREATMENT TECHNOLOGY[3]	ESTIMATED[4] TOTAL COST $/KKg	ESTIMATED[4] TOTAL COST $/TON
Suspended Solids	No discharge of process wastewater pollutants to navigable waters.		On-site acid recovery plant. Reclaims usable sulfuric acid, and a solid ferrous sulfate heptahydrate for resale to other users.	2.189	1.990
Dissolved Iron					
pH					
Flow	Most probable value is 0 liters of effluent per kkg of product (0 gal/ton); excluding all non-contact cooling water.				

(1) Kilograms per metric ton of steel pickled or pounds per 1000 pounds of steel pickled.
(2) Milligrams per liter based on 0 liters effluent per kkg of steel pickled (0 gal/ton).
(3) Available technology listed is not necessarily all inclusive nor does it reflect all possible combinations or permutations of treatment methods.
(4) Costs may vary some depending on such factors as location, availability of land and chemicals, flow to be treated, treatment technology selected where competing alternatives exist, and extent of preliminary modifications required to accept the indicated control and treatment devices. Estimated total costs shown are only incremental costs required above those facilities which are normally existing within a plant and/or have been installed as a result of complying with BPCTCA standards.

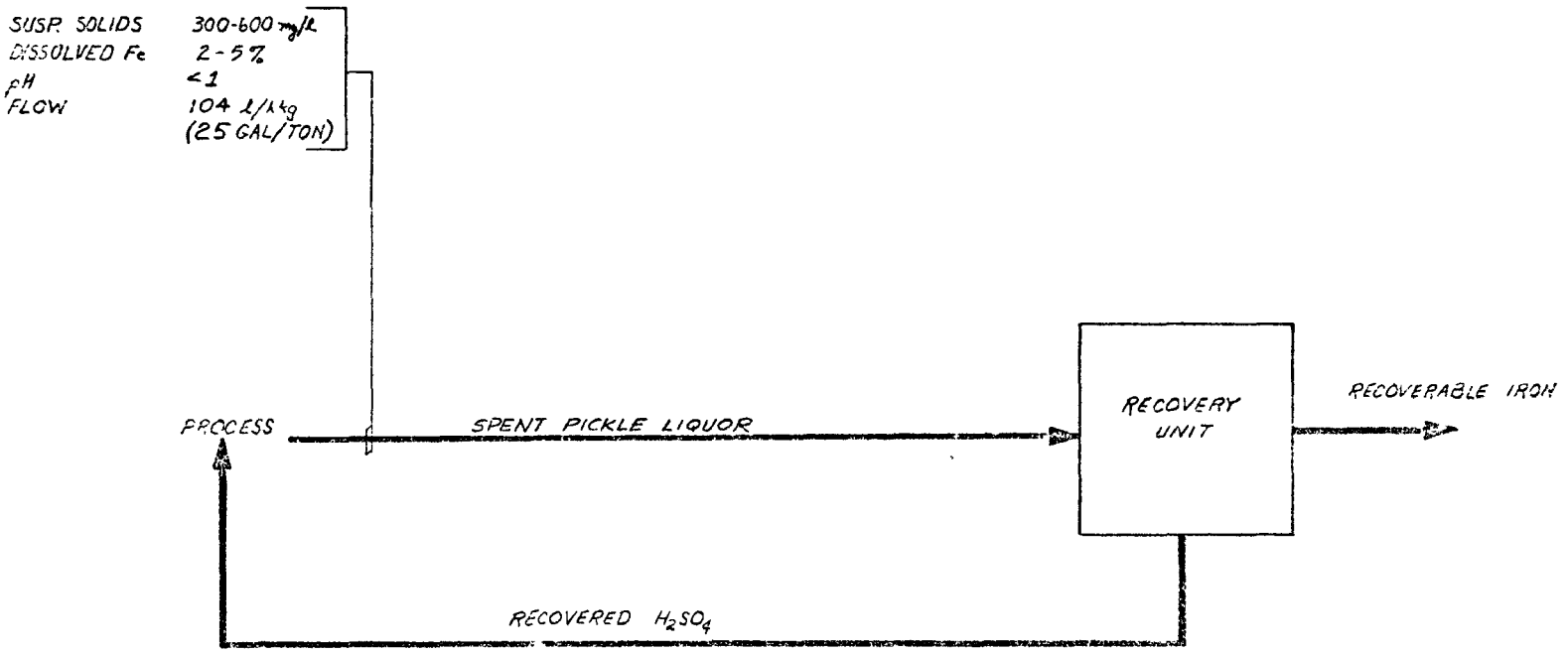

REFERENCE LEVEL SYSTEM & BPCTCA MODEL
BATEA MODEL

ENVIRONMENTAL PROTECTION AGENCY STEEL INDUSTRY STUDY PICKLING / H_2SO_4 - BATCH - CONCENTRATED SUBCATEGORY BATEA MODEL	
5-22-74 REV 6-22-75	FIGURE 97A

FIGURE 97.3

MODEL COST EFFECTIVENESS DIAGRAM
PICKLING - SULFURIC ACID - BATCH - CONCENTRATED
SUBCATEGORY

ANNUAL COSTS = BASED ON TEN YEAR CAPITAL RECOVERY
+ INTEREST RATE 7%
+ OPERATING COSTS INCLUDE LABOR, CHEMICALS & UTILITIES
+ MAINTENANCE COSTS BASED ON 3.5% OF CAPITAL COSTS
COSTS BASED ON 227 HKG/DAY (250 TONS/DAY) OF STEEL PICKLED
THIS GRAPH CANNOT BE USED FOR INTERMEDIATE VALUES

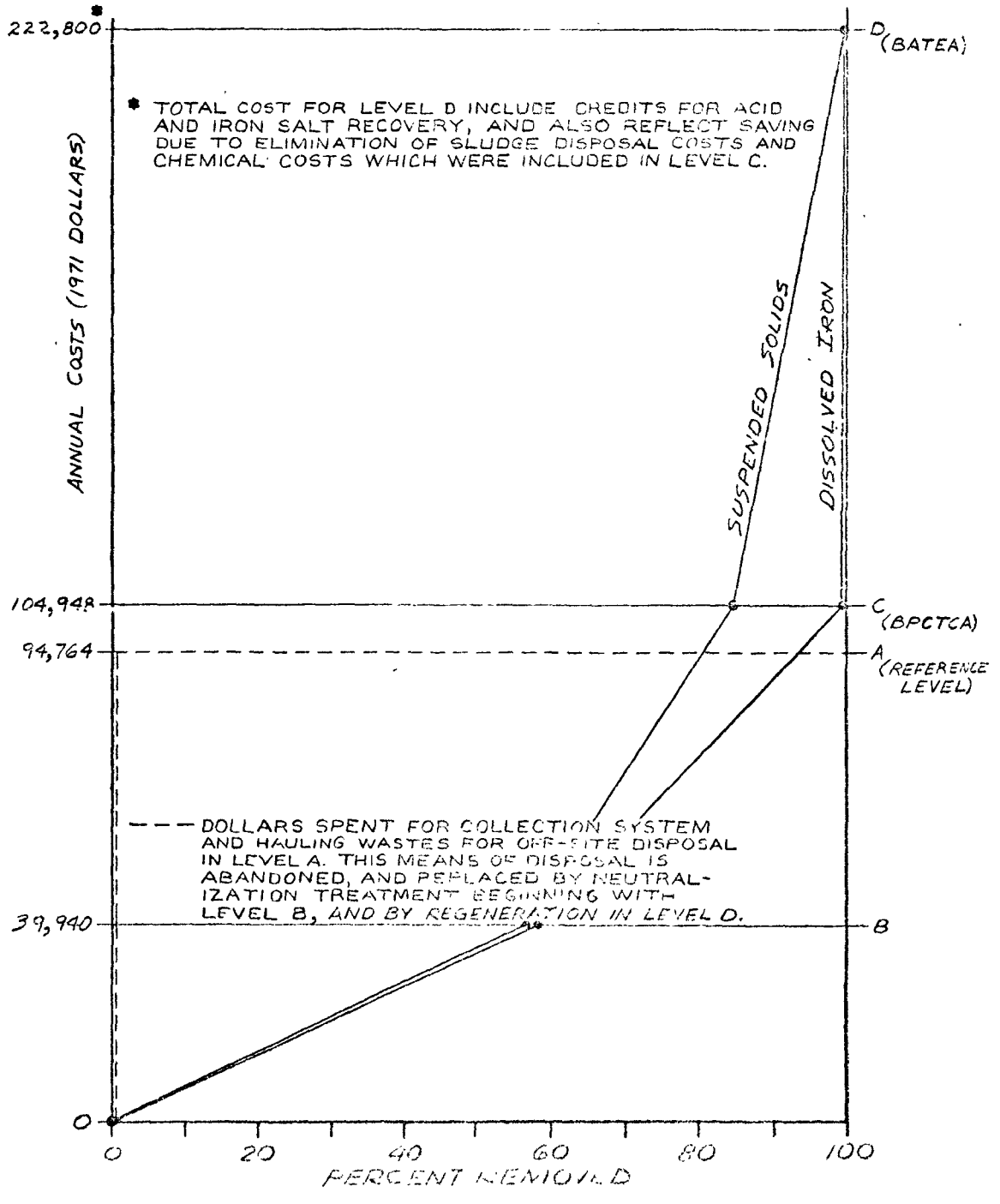

TABLE 99

BATEA - EFFLUENT LIMITATIONS GUIDELINES

SUBCATEGORY Pickling - Sulfuric Acid - Batch - Rinse

CRITICAL PARAMETERS	BATEA LIMITATIONS Kg/KKg (LB/1000 LB)[1]	BATEA LIMITATIONS mg/l[2]	CONTROL & TREATMENT TECHNOLOGY[3]	ESTIMATED TOTAL COST[4] $/KKg	ESTIMATED TOTAL COST[4] $/TON
Suspended Solids	No discharge of process wastewater pollutants to navigable waters.		Reuse of all rinse waters to make up fresh batches of pickle liquor. Used in conjunction with an on-site acid recovery system for reclaiming concentrates.	0.165	0.150
Oil and Grease[5]					
Dissolved Iron					
pH					
Flow	Most probable value is 0 liters of effluent per kkg of product (0 gal/ton); excluding all non-contact cooling water.				

(1) Kilograms per metric ton of steel pickled or pounds per 1000 pounds of steel pickled.
(2) Milligrams per liter based on 0 liters effluent per kkg of steel pickled (0 gal/ton).
(3) Available technology listed is not necessarily all inclusive nor does it reflect all possible combinations or permutations of treatment methods.
(4) Costs may vary some depending on such factors as location, availability of land and chemicals, flow to be treated, treatment technology selected where competing alternatives exist, and extent of preliminary modifications required to accept the indicated control and treatment devices. Estimated total costs shown are only incremental costs required above those facilities which are normally existing within a plant and/or have been installed as a result of complying with BPCTCA standards.
(5) This load is allowed only when these wastes are treated in combination with cold rolling mill wastes.

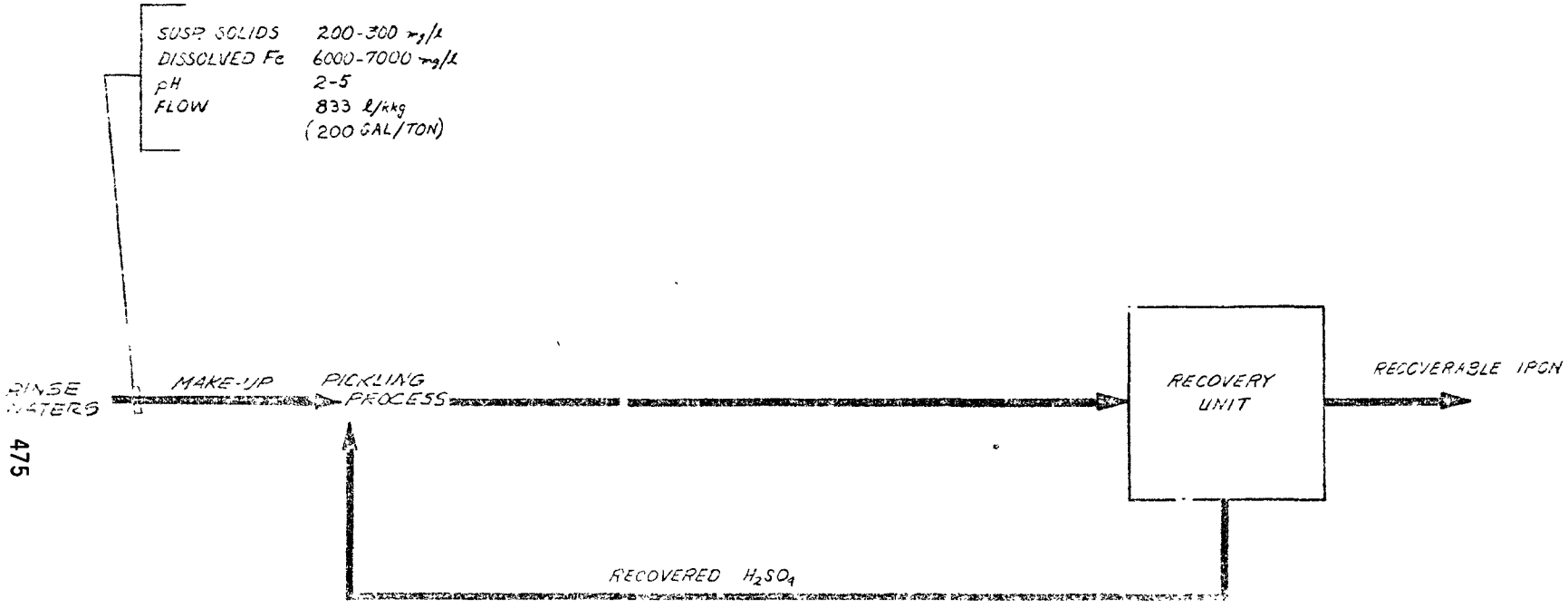

ACCUMULATE LEVEL SYSTEM & BATCH MODEL

BATEA MODEL

ENVIRONMENTAL PROTECTION AGENCY
STEEL INDUSTRY STUDY
PICKLING / H_2SO_4 - BATCH-RINSE
SUBCATEGORY
BATEA MODEL

FIGURE 98A

FIGURE 98B

MODEL COST EFFECTIVENESS DIAGRAM
PICKLING SULFURIC ACID - BATCH - RINSE SUBCATEGORY

ANNUAL COSTS = BASED ON TEN YEAR CAPITAL RECOVERY
+ INTEREST RATE 7%
+ OPERATING COSTS INCLUDE LABOR, CHEMICALS & UTILITIES
+ MAINTENANCE COSTS BASED ON 3.5% OF CAPITAL COSTS
COSTS BASED ON 227 KKG/DAY (250 TONS/DAY) OF STEEL PICKLED
THIS GRAPH CANNOT BE USED FOR INTERMEDIATE VALUES

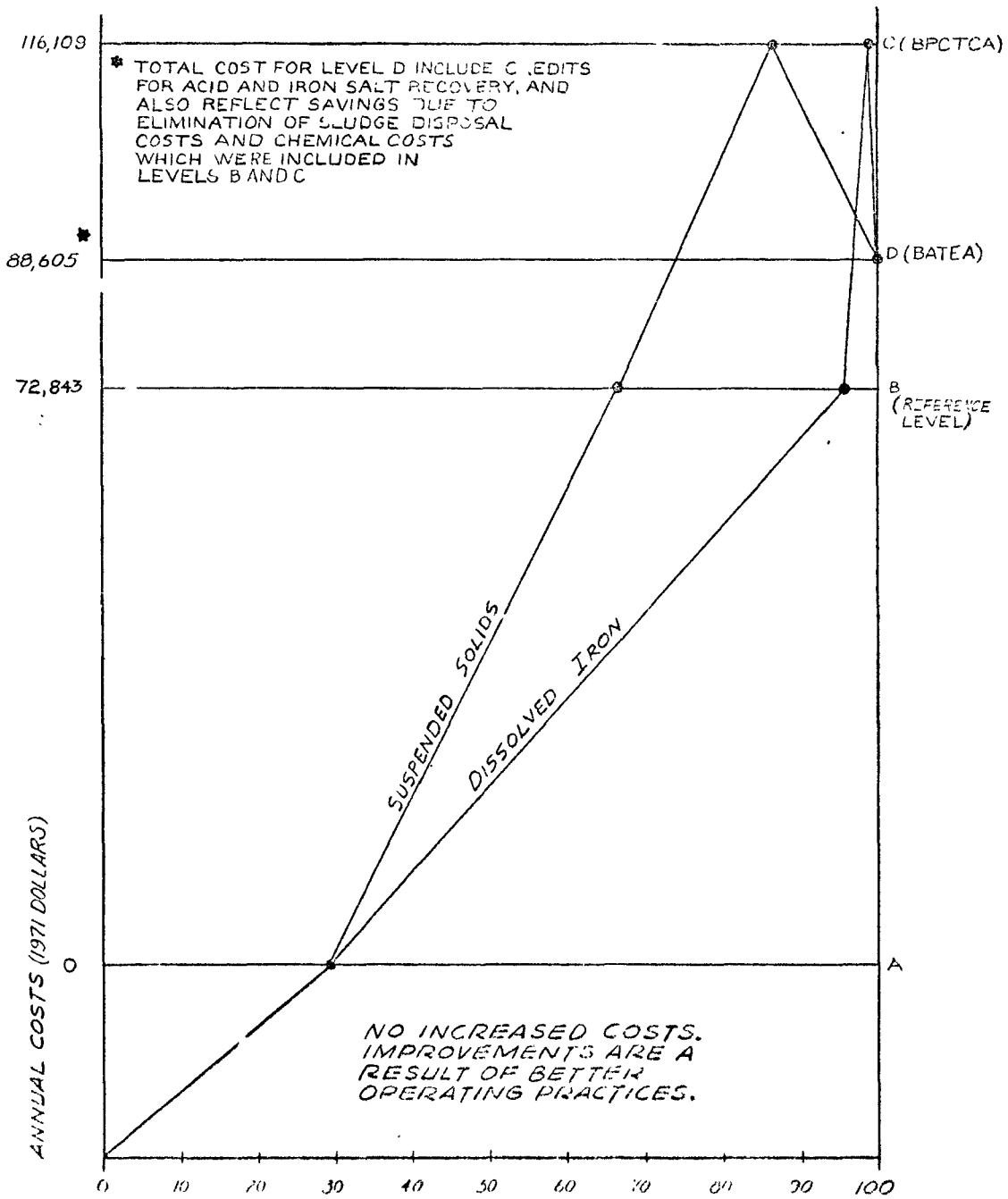

the ferrous sulfate heptahydrate to ferric oxide and sulfuric acid, possibly in independent chemical recovery plants serving many individual picklers. But the existing acid recovery plants currently in operation have successfully eliminated all aqueous discharges to any receiving stream. For this reason, the recommended BATEA effluent limitations for both the Batch Sulfuric Acid - Concentrates, and the Batch Sulfuric Acid - Rinse subcategories are established as no aqueous discharges of process wastewaters to receiving streams. The means for achieving this level are currently available and in use in these subcategories. The BATEA ELGs for this subcategory and the control and treatment technology to achieve these limits are summarized in Tables 98 and 99.

Pickling - Continuous Sulfuric Acid - Concentrates and Rinse Water Subcategories

The BATEA ELGs for this subcategory are as yet undeveloped, awaiting the completion of additional plant surveys to provide an expanded data base. The only continuous sulfuric acid pickling operation surveyed was practicing a high degree of treatment technology and was producing no aqueous discharge. However, additional examples must be surveyed to insure the applicability of this technology to the entire subcategory, especially since the selected plant is a comparatively small continuous strip pickling line producing 300 tons/day of product. As a result, BATEA limitations for this subcategory are temporarily deferred pending completion of the additional plant surveys.

Pickling - Continuous Hydrochloric Acid - Concentrates

The most modern pickling installations in use today utilize hydrochloric acid continuous pickling, with continuous regeneration of spent pickle liquor to produce reusable hydrochloric acid and sinterable ferric oxides. Such systems are discussed in Section IX, where the BPCTCA limitations were set using such a system to recover spent concentrated acid, discharging only the wastewaters from the absorber vent scrubber.

A significant reduction in discharge flows from this system can be obtained by adding a recycle loop on the absorber vent scrubbers, and treating the blowdown from this system via aeration, lime neutralization and sedimentation. A system such as this has not been tested; however, the key to the system is keeping the water flows in balance. Systems similar to this are in use in the sulfuric acid subcategories with considerable success.

Based on the above, the BATEA limits for pickling operations utilizing HCl regeneration have been established for each critical parameter as discussed below. The BATEA ELGs for this subcategory and the control and treatment technology to achieve these limits are summarized in Table 100.

For those hydrochloric acid pickling operations not practicing acid regeneration, joint treatment of spent concentrates and rinse waters was recommended to achieve the BPCTCA limitations. This technology is further advanced through use of countercurrent rinsing to reduce flows from that source to less than 209 l/kkg (50 gal./ton), which when taken together with the wastewater flow from spent concentrates gives a total flow to the treatment plant of 333 l/kkg (80 gal./ton of product). Although the only plant surveyed which was discharging flows approximately twice as large as the recommended flows, two of the other plants, one using regeneration and the other deep well disposal, were successfully concentrating rinse water flows to 50 gal./ton or less. In fact, the plant using deep well disposal methods achieves flow rates of only 3.3 gal./ton of spent pickle liquor, plus 5.9 gal./ton of rinse water using a cascade system, indicating how efficiently such rinse water conservation practice may be. The BATEA limitations for this subcategory (without regeneration of concentrates) and the control and treatment technology to achieve the recommended limits are summarized in Table 100. A discussion of these limitations parameter by parameter follows.

Suspended Solids. For those plants utilizing HCl regeneration systems, a BATEA limitation of 0.0031 kg/kkg (0.0062 lbs/ton) of steel pickled is established as the load from regenerating the spent concentrates. This load is equivalent to 25 mg/l in an absorber vent scrubber system's blowdown at a rate of 125 l/kkg (30 gal./ton). Currently, none of the three plants using HCl regeneration systems is recycling or treating their absorber vent scrubber discharges, so none are attaining the recommended limitation. The nearest approach is made by the plant equipped with electrostatic precipitators rather than cyclones, since the untreated discharge from that source exceeds the limit by 34%. Even a minor degree of recycle and minimum treatment of blowdowns would suffice to bring that plant into compliance. Correspondingly higher levels of treatment would be required to control wastes from other plants, but the technology is available and demonstrated for other iron and steel industry subcategories.

TABLE 100

BATEA - EFFLUENT LIMITATIONS GUIDELINES

SUBCATEGORY Pickling - Hydrochloric Acid - Concentrates

CRITICAL PARAMETERS	BATEA LIMITATIONS Kg/KKg (1) (LB/1000 LB)	BATEA LIMITATIONS mg/l (2)	CONTROL & TREATMENT TECHNOLOGY (3)	ESTIMATED (4) TOTAL COST $/KKg	ESTIMATED (4) TOTAL COST $/TON
Suspended solids	0.0031	25	On site acid regeneration plant; recycle of absorber scrubber water, with treatment of blowdown via aeration, lime neutralization and sedimentation.	0.013	0.012
Oil and Grease (5)	0.0013	10			
Dissolved Iron	0.00013	1			
pH	6.0-9.0		pH neutralization		

Flow Most probable value is 125 liters of effluent per kkg of product (30 gal/ton) excluding all non-contact cooling water.

(1) Kilograms per metric ton of steel pickled or pounds per 1000 pounds of steel pickled.
(2) Milligrams per liter based on 125 liters effluent per kkg of steel pickled (30 gal/ton).
(3) Available technology listed is not necessarily all inclusive nor does it reflect all possible combinations or permutations of treatment methods.
(4) Costs may vary some depending on such factors as location, availability of land and chemicals, flow to be treated, treatment technology selected where competing alternatives exist, and extent of preliminary modifications required to accept the indicated control and treatment devices. Estimated total costs shown are only incremental costs required above those facilities which are normally existing within a plant and/or have been installed as a result of complying with BPCTCA standards.
(5) This load is allowed only when these wastes are treated in combination with cold rolling mill wastes.

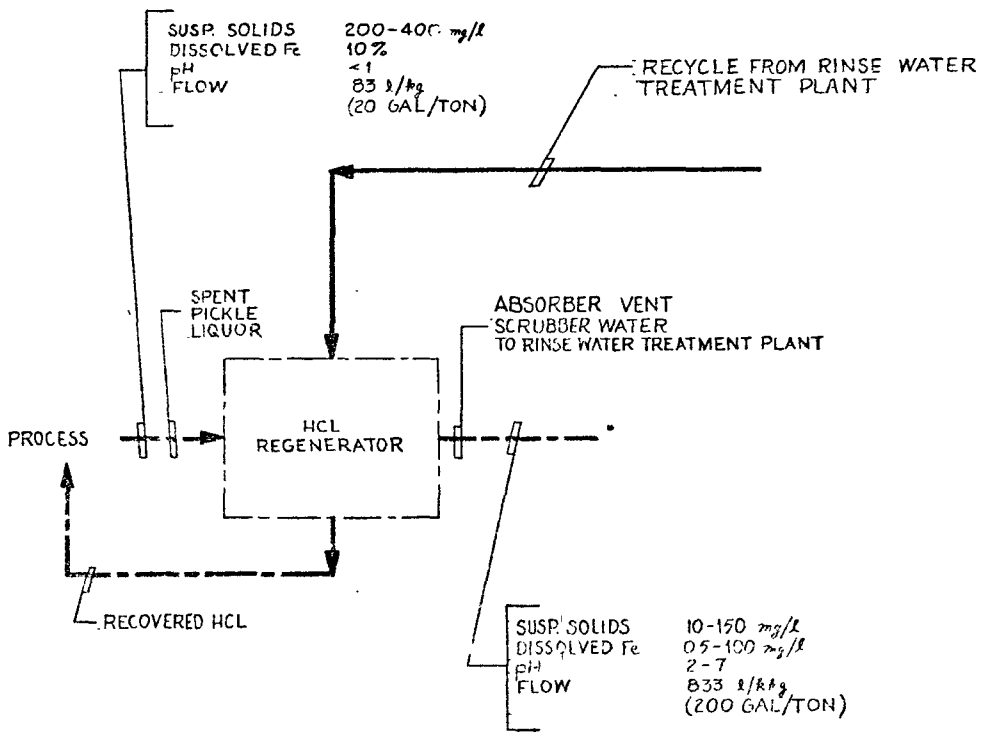

—·—·— REFERENCE LEVEL SYSTEM & BATEA MODEL
——— BATEA MODEL

ENVIRONMENTAL PROTECTION AGENCY STEEL INDUSTRY STUDY PICKLING/HCL-CONCENTRATED-ALTERNATE I SUBCATEGORY BATEA MODEL		
REV	11-20-74 5-22-75	FIGURE 99A

FIGURE 22B

MODEL COST EFFECTIVENESS DIAGRAM
PICKLING HYDROCHLORIC ACID -
CONCENTRATED SUBCATEGORY - ALTERNATE I

ANNUAL COST = BASED ON TEN YEAR CAPITAL RECOVERY
+ INTEREST RATE 7%
+ OPERATING COSTS INCLUDE LABOR, CHEMICALS & UTILITIES
+ MAINTENANCE COSTS BASED ON 3.5% OF CAPITAL COSTS
COSTS BASED ON 2721 KKG/DAY (3000 TONS/DAY) OF STEEL PICKLED.
THIS GRAPH CANNOT BE USED FOR INTERMEDIATE VALUES

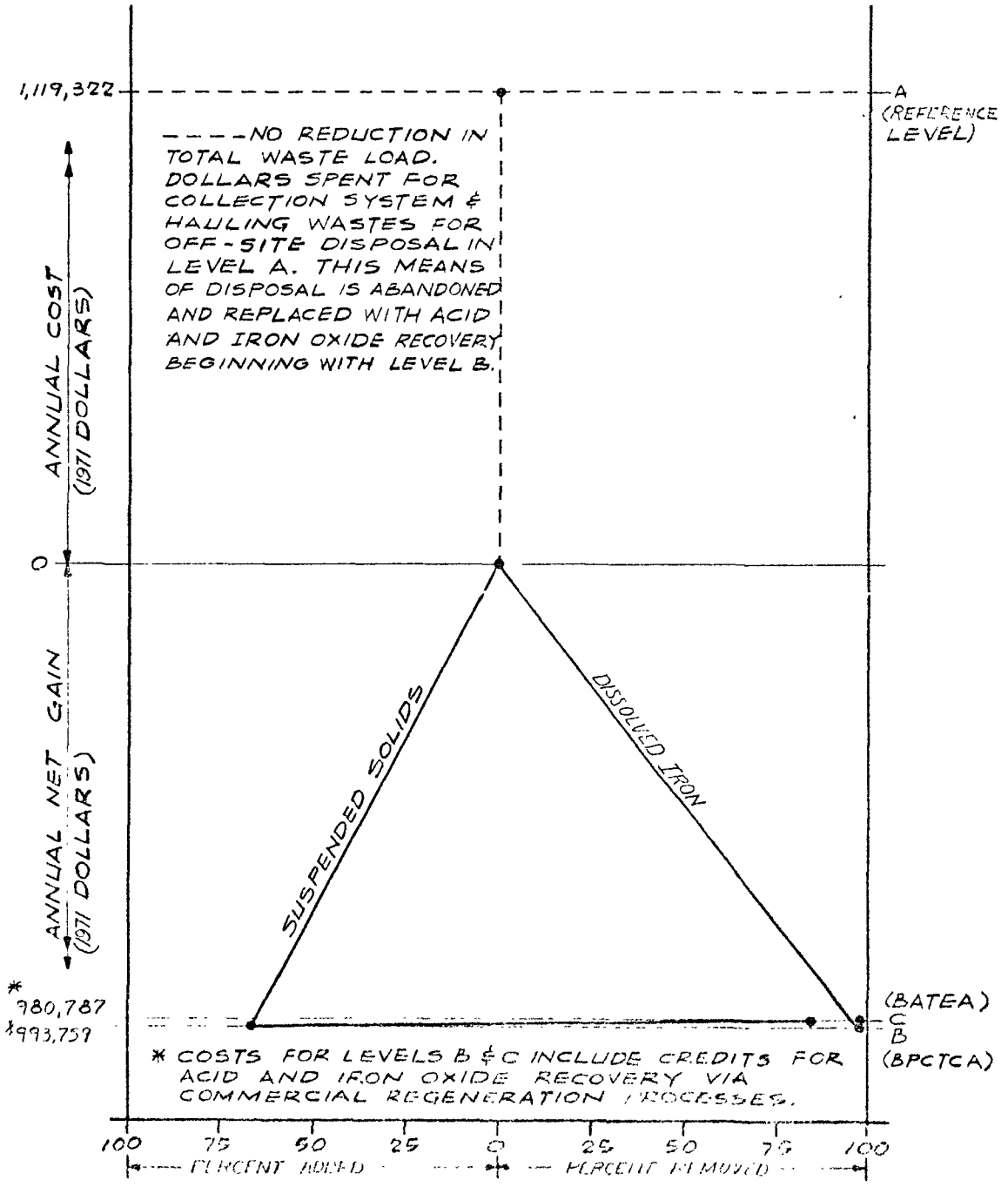

For those plants practicing joint treatment of rinses and concentrate without recourse to HCl regeneration, the recommended BATEA limitation for total suspended solids are presented in Table 102 and are set at 0.0083 kg/kkg (0.0167 lbs/ton) of steel pickled, equivalent to 25 mg/l based on a combined flow of 333 l/kkg (80 gal./ton). An additional load of 0.0052 kg/kkg (0.0104 lbs/ton) is allowed for those plants utilizing wet fume hood scrubbers in conjunction with pickling operation, equivalent to 25 mg/l in a flow of 209 l/kkg (50 gal./ton). The one plant treating these wastes jointly was exceeding the recommended BATEA suspended solids limit by a factor of three, but if tighter control of rinse water flows were practiced, superior solids removal would be expected from the existing treatment system. As it is, the effluent concentrations leaving the system during sampling ranged from 21 to 56 mg/l suspended solids, indicating that control of certain factors can lead to improved effluent quality. Also worthy of note, this plant was treating its wastes to attain levels suitable for discharge to the municipal sanitary authority for further treatment. As such, their TSS standard would have no limitations other than local plant requirements.

Dissolved Iron. For those hydrochloric acid pickling operations using HCl regeneration systems, a BATEA limitation for dissolved iron of 0.00013 kg/kkg (0.00026 lbs/ton) of steel pickled is recommended, equivalent to 1 mg/l in a discharge flow of 125 l/kkg (30 gal./ton). Of the three plants surveyed, two were successful in treating wastes to this degree as long as careful attention was paid to pH control. However, one of the plants, whose load was only 62% of the BATEA limit at pH 7.0 or above, discharged as much as 120 times the limit as the pH went down to 5.1.

For plants practicing joint treatment of concentrates and rinses, rather than HCl regeneration, the BATEA limitation for dissolved iron are set at 0.00034 kg/kkg (0.00068 lbs/ton) of steel pickled, equivalent to 1 mg/l in a combined discharge flow of 333 l/kkg (80 gal./ton). An additional load of 0.00021 kg/kkg (0.00042 lbs/ton) is allowed for those plants using wet fume hood scrubbers. The one plant surveyed treating spent concentrates and rinse water jointly was achieving a dissolved iron load of less than 50% of the recommended effluent load through use of aeration, lime neutralization, thickening and vacuum filtration of underflows demonstrating the effectiveness of this system for handling such wastes.

pH. As in all other subcategories, the BATEA ELG for pH is he range 6.0 to 9.0. Since the treatment required to

TABLE 102

BATEA - EFFLUENT LIMITATIONS GUIDELINES

SUBCATEGORY Pickling - Hydrochloric Acid Concentrates and Rinses (1)

CRITICAL PARAMETERS	BATEA LIMITATIONS Kg/KKg (LB/1000 LB) (2)	BATEA LIMITATIONS mg/l (3)	CONTROL & TREATMENT TECHNOLOGY (4)	ESTIMATED (5) TOTAL COST $/KKg	ESTIMATED (5) TOTAL COST $/TON
Suspended Solids	0.0083 0.0052 (6)	25	Reduction of rinse waters via counter current rinsing techniques applied to control and treatment technology required to achieve BPCTCA ELG's.	0.082	0.075
Oil and Grease (7)	0.0034 0.0021 (6)	10			
Dissolved Iron	0.00034 0.00021 (6)	1			
pH	6.0-9.0				
Flow	Most probable value is 333 liters of effluent per kkg of product (80 gal/ton); excluding all non-contact cooling water.				

(1) Effluent Limitations which are indicated are the sum of the individual limitations for concentrate subcategories and rinse subcategories.

(2) Kilograms per metric ton of steel pickled or pound per 1000 pounds of steel pickled.

(3) Milligrams per liter based on 333 liters effluent per kkg of steel pickled (80 gal/ton).

(4) Available technology listed is not necessarily all inclusive nor does it reflect all possible combinations or permutations of treatment methods.

(5) Costs may vary some depending on such factors as location, availability of land and chemicals, flow to be treated, treatment technology selected where competing alternatives exist, and extent of preliminary modifications required to accept the indicated control and treatment devices. Estimated total costs shown are only incremental costs required above those facilities which are normally existing within a plant and/or have been installed as a result of complying with BPCTCA standards.

(6) This limitation allowed in addition if the pickle line has a fume hood scrubber.

(7) This load is allowed only when these wastes are treated in combination with cold rolling mill wastes.

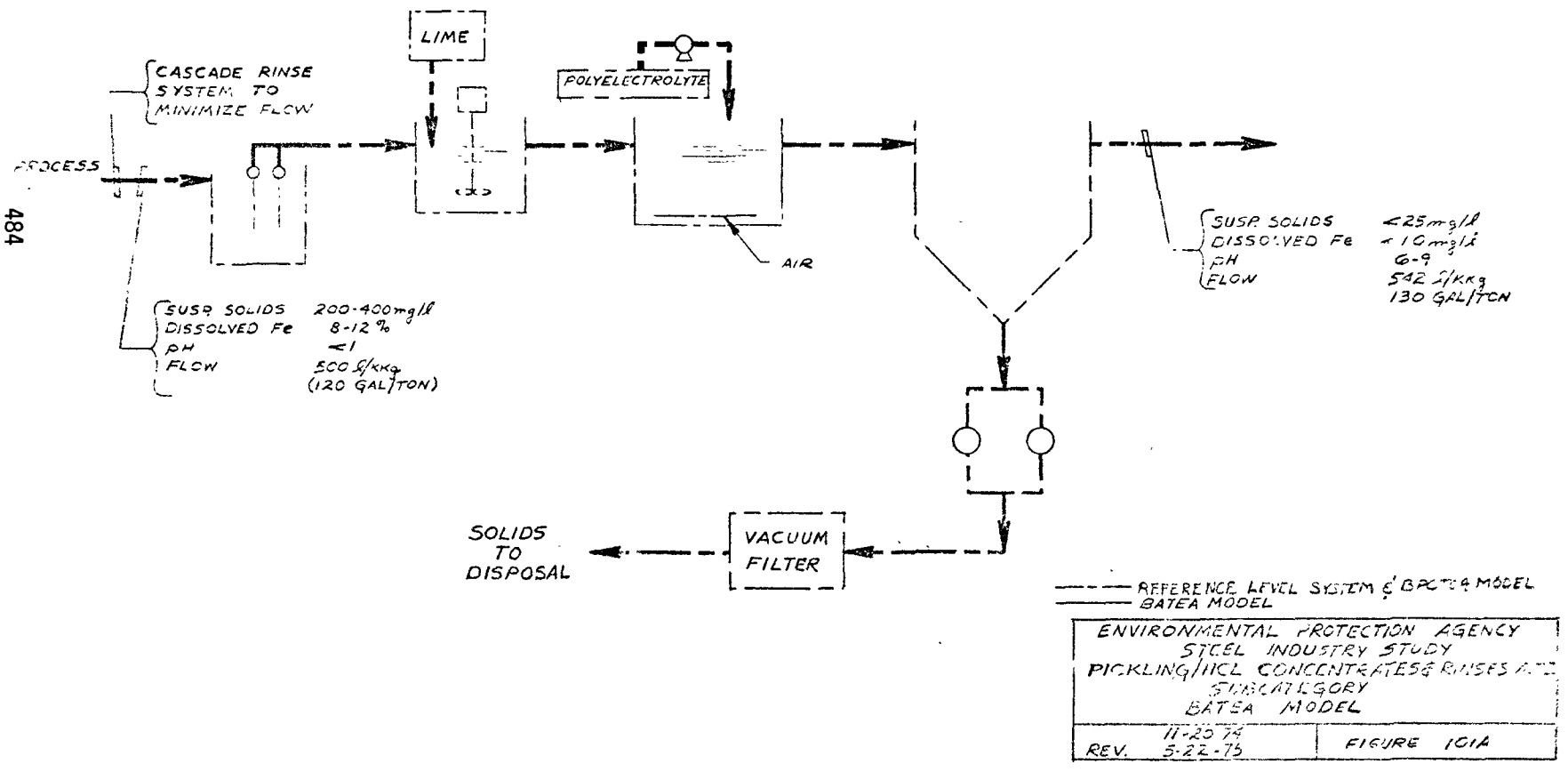
CASCADE RINSE SYSTEM TO MINIMIZE FLOW
PROCESS
SUSP. SOLIDS 200-400 mg/l
DISSOLVED Fe 8-12 %
pH <1
FLOW 500 l/kkg (120 GAL/TON)
LIME
POLYELECTROLYTE
AIR
SUSP. SOLIDS <25 mg/l
DISSOLVED Fe <10 mg/l
pH 6-9
FLOW 542 l/kkg 130 GAL/TON
VACUUM FILTER
SOLIDS TO DISPOSAL
REFERENCE LEVEL SYSTEM & BPCTCA MODEL
BATEA MODEL
ENVIRONMENTAL PROTECTION AGENCY
STEEL INDUSTRY STUDY
PICKLING/HCL CONCENTRATES & RINSES ATI
SUBCATEGORY
BATEA MODEL
11-20-74
REV. 5-22-75
FIGURE 101A

FIGURE III B
MODEL COST EFFECTIVENESS DIAGRAM
PICKLING - HYDROCHLORIC ACID -
CONCENTRATED AND RINSE - SUBCATEGORY - ALTERNATE II

ANNUAL COST = BASED ON TEN YEAR CAPITAL RECOVERY
+ INTEREST RATE 7%
+ OPERATING COSTS INCLUDE LABOR, CHEMICALS & UTILITIES
+ MAINTENANCE COSTS BASED ON 3.5% OF CAPITAL COSTS
COSTS BASED ON 272 KKG/DAY (300 TONS/DAY)
OF STEEL PICKLED
THIS GRAPH CANNOT BE USED FOR INTERMEDIATE VALUES

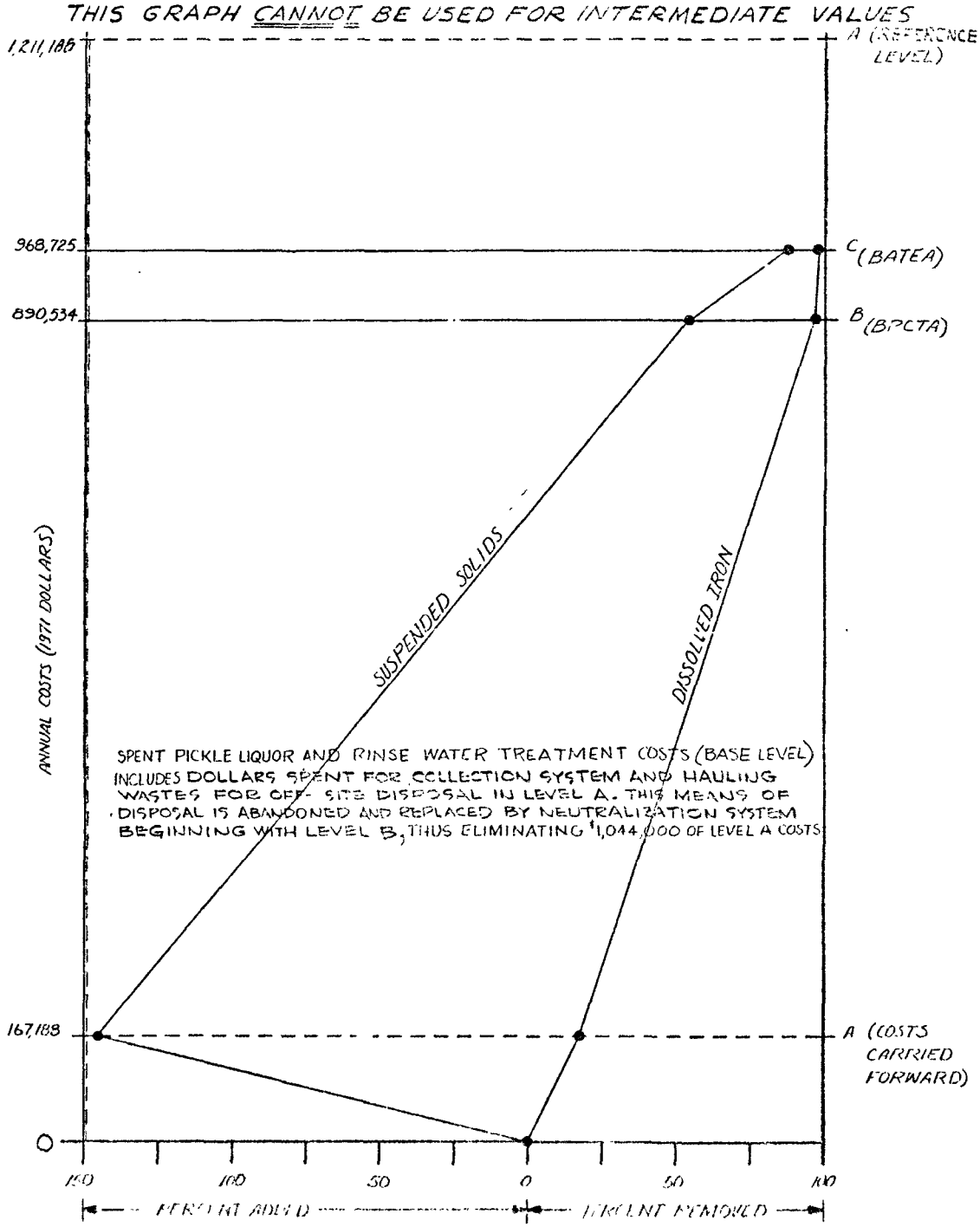

achieve the BATEA dissolved iron limitations involves the use of alkalies to raise the pH values, no additional equipment or expense is required to insure meeting the pH constraints.

Pickling - Hydrochloric Acid - Rinse Waters

One of the two plants providing more or less complete treatment of rinse waters in this subcategory has been used as the basis for establishing all BATEA Effluent Limitations Guidelines. This plant provides equalization, blending, lime addition to pH 8.0, mixing, aeration in dual chambers, polymer addition, clarification in either of two identical thickeners used in parallel with vacuum filtration of underflows, and final settling in a large lagoon with discharge of overflow to a receiving stream. An effluent of extremely high quality results. All parameters listed below are effectively removed using the above equipment and treatment technology. The BATEA limitations for the rinse waters, and the control and treatment technology to achieve these limits are summarized in Table 101.

Suspended Solids. For separate treatment of rinse waters, a BATEA effluent limitation of 0.0052 kg/kkg (0.0104 lbs of solids per ton) of steel pickled is recommended, equivalent to 25 mg/l at a flow rate of 209 l/kkg (50 gal./ton). An additional allowance of 0.0052 kg/kkg (0.0104 lbs/ton) is provided for plants utilizing wet fume hood scrubbers in conjunction with the pickling operations. The plant described above discharges about a third of this solids loading, but has a longer final lagoon detention time than the proposed treatment system. However, even the clarifier effluent (prior to lagooning) meets the limits.

For pickling operations treating rinse waters in conjunction with spent concentrates, the BATEA limitations for suspended solids were discussed previously in the paragraph on Pickling - Hydrochloric Acid - Concentrates.

Dissolved Iron. For pickling operations treating rinse water separately, a BATEA limitation of 0.00021 kg/kkg (0.00042 lbs of dissolved iron per ton) of steel pickled is recommended, equivalent to 1 mg/l based on a rinse water flow of 209 l/kkg (50 gal./ton). Three hydrochloric pickling operations achieve this recommendation - the complete treatment system which is the model for all BATEA treatment stages, the joint treatment system with the single thickener, and the small wire pickling operation associated with the Hot Coatings - Galvanizing subcategory. These three widely different pickling operations deomonstrate that

TABLE 101

BATEA - EFFLUENT LIMITATIONS GUIDELINES

SUBCATEGORY Pickling - Hydrochloric Acid - Rinses

CRITICAL PARAMETERS	BATEA LIMITATIONS (5) Kg/KKg (1) (LB/1000 LB)	mg/l (2)	CONTROL & TREATMENT TECHNOLOGY (3)	ESTIMATED (4) TOTAL COST $/KKg	$/TON
Suspended Solids	0.0052	25	Reduction of rinse waters via cascade rinsing plus application of BPCTCA technology.	0.083	0.075
	0.0052 (5)				
Oil and Grease (6)	0.0021	10	pH neutralization		
	0.0021 (5)				
Dissolved Iron	0.00021	1			
	0.00021 (5)				
pH		6.0-9.0			
Flow	Most probable value is 209 liters of effluent per kkg of product (50 gal/ton); excluding all non-contact cooling water.				

(1) Kilograms per metric ton of steel pickled or pounds per 1000 pounds of steel pickled.
(2) Milligrams per liter based on 209 liters effluent per kkg of steel pickled (50 gal/ton).
(3) Available technology listed is not necessarily all inclusive nor does it reflect all possible combinations or permutations of treatment methods.
(4) Costs may vary some depending on such factors as location, availability of land and chemicals, flow to be treated, treatment technology selected where competing alternatives exist, and extent of preliminary modifications required to accept the indicated control and treatment devices. Estimated total costs shown are only incremental costs required above those facilities which are normally existing within a plant and/or have been installed as a result of complying with BPCTCA standards.
(5) This limitation allowed in addition if the pickle line has a fume hood scrubber. Most probable value is 209 liters of effluent per kkg of product (50 gal/ton).

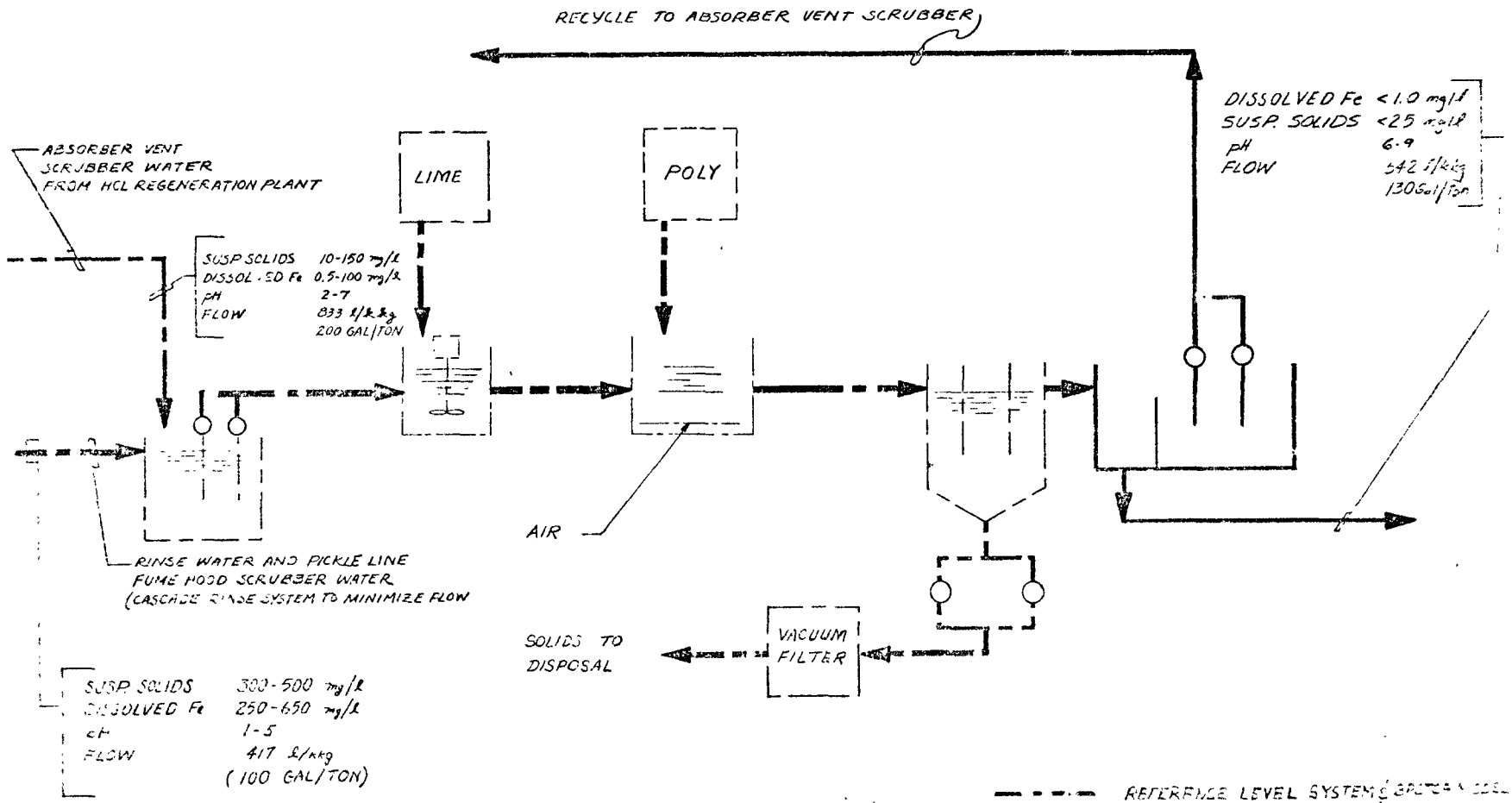

ENVIRONMENTAL PROTECTION AGENCY STEEL INDUSTRY STUDY PICKLING/HCL - RINSE - ALTERNATE I SUBCATEGORY BATEA MODEL	
11-20-74 REV. 1-22-75	FIGURE 100A

FIGURE 100B

MODEL COST EFFECTIVENESS DIAGRAM
PICKLING HYDROCHLORIC ACID - RINSE SUBCATEGORY ALTERNATE L

ANNUAL COSTS = BASED ON TEN YEAR CAPITAL RECOVERY
+ INTEREST RATE 7%
+ OPERATING COSTS INCLUDE LABOR, CHEMICALS & UTILITIES
+ MAINTENANCE COSTS BASED ON 3.5% OF CAPITAL COSTS
COST BASED ON 2721 KKG/DAY (3000 TONS/DAY) OF STEEL PICKLED
THIS GRAPH CANNOT BE USED FOR INTERMEDIATE VALUES

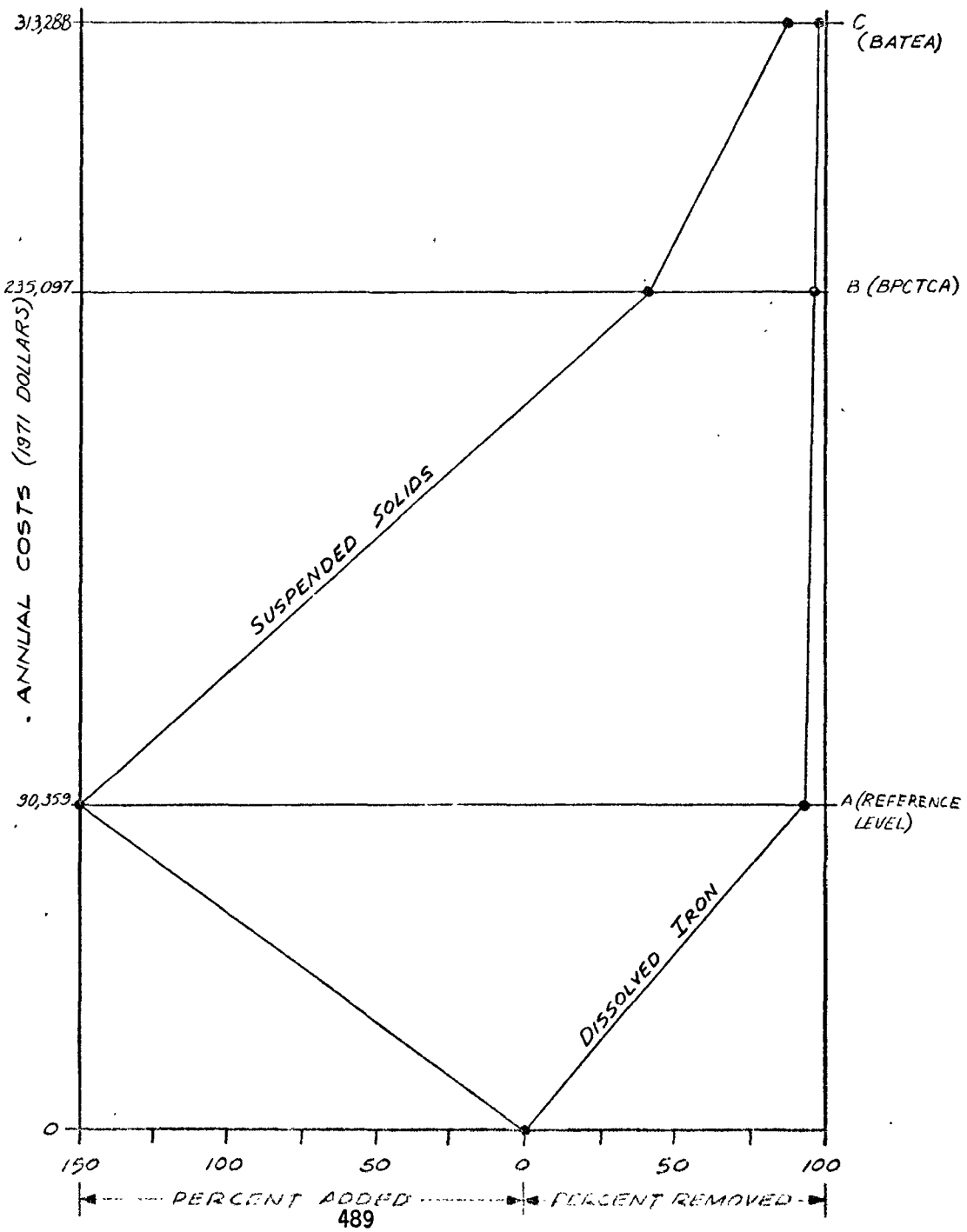

given proper lime treatment, the BATEA limitation can be consistently met.

For pickling operations utilizing joint treatment of rinses along with spent concentrates, the BATEA limitations were discussed previously in the paragraphs on Pickling - Hydrochloric Acid -Concentrates.

Oil and Grease. As discussed in Section IX, some plants find it advantageous to treat pickling rinse waters jointly with cold rolling wastes. The BATEA limitation for oil and grease from such joint treatment operations is set at 0.0021 kg/kkg (0.0042 lbs/ton), equivalent to 10 mg/l in a discharge flow of 209 l/kkg (50 gal./ton). An additional load of 0.0021 kg/kkg (0.0042 lbs/ton) is allowed if the plant operates in wet fume hood scrubber system in conjunction with the pickling operations. The one plant surveyed practicing such joint treatment discharges on oil loading of 87% of this limit at the thickener overflow, indicating that the limit is attainable using present equipment and technology. For plants treating spent concentrates and rinse waters from pickling jointly with cold rolling wastewaters, the BATEA limits for oil and grease are set at 0.0034 kg/kkg (0.0068 lbs/ton), equivalent to 10 mg/l in a discharge flow of 333 l/kkg (80 gal./ton). An additional allowance of 0.0021 kg/kkg (0.0042 lbs/ton) is provided if a wet fume hood scrubber system is used over the pickling tanks.

pH. As in all other subcategories, the BATEA ELGs for pH require it to be in the range 6.0 to 9.0. Since treatment with alkalies is required to attain the recommended BATEA limits for dissolved iron, no further equipment or expense will be required to maintain the proper pH values.

Cold Rolling Subcategory Operations

The degree of effluent load reductions achieved via the treatment and control technology required to attain the BPCTCA limitations for recirculation, combination and direct application cold rolling operations as described in Section IX is equivalent to the best available technology economically achievable at this time. To achieve additional reductions would require expenditures of capital and operating costs out of line with the benefits derived. For this reason, the BATEA limitations for the cold rolling operations are identical with the BPCTCA limitations in all cases. The BATEA limitations for this subcategory and the control and treatment technology to achieve the recommended limits are summarized in Tables 103, 104 and 105.

TABLE 103

BATEA - EFFLUENT LIMITATIONS GUIDELINES

SUBCATEGORY Cold Rolling - Recirculation

CRITICAL PARAMETERS	BATEA LIMITATIONS Kg/KKg (LB/1000 LB)[1]	BATEA LIMITATIONS mg/l[2]	CONTROL & TREATMENT TECHNOLOGY[3]	ESTIMATED[4] TOTAL COST $/KKg	ESTIMATED[4] TOTAL COST $/TON
Suspended Solids	0.0026	25			
Oil and Grease	0.00104	10	Same as BPCTCA.	---	
Dissolved Iron[5]	0.000104	1			
pH	6.0-9.0				
Flow	Most probable value for a tight recycle system's blowdown flow is 104 liters of effluent per kkg of steel rolled (25 gal/ton); excluding all non-contact cooling water.				

(1) Kilograms per metric ton of steel rolled or pounds per 1000 pounds of steel rolled.
(2) Milligrams per liter based on 104 liters effluent per kkg of steel rolled (25 gal/ton).
(3) Available technology listed is not necessarily all inclusive nor does it reflect all possible combinations or permutations of treatment methods.
(4) Costs may vary some depending on such factors as location, availability of land and chemicals, flow to be treated, treatment technology selected where competing alternatives exist, and extent of preliminary modifications required to accept the indicated control and treatment devices. Estimated total costs shown are only *incremental* costs required above those facilities which are normally existing within a plant and/or have been installed as a result of complying with BPCTCA standards.
(5) This load is allowed only when these wastes are treated in combination with pickle line rinse wastewaters.

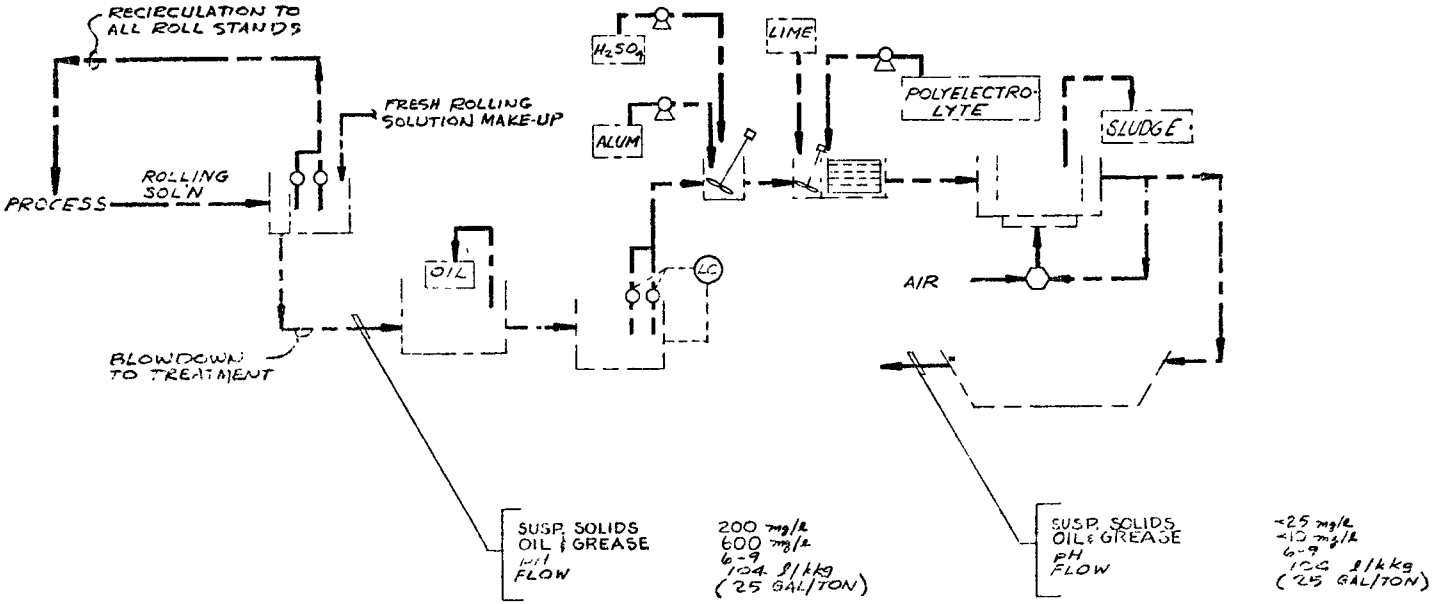

——— REFERENCE LEVEL & BPCTCA MODEL
& BATEA MODEL

ENVIRONMENTAL PROTECTION AGENCY STEEL INDUSTRY STUDY COLD ROLLING - RECIRCULATION SUBCATEGORY BATEA MODEL		
	11-22-74	
REV	5-22-75	FIGURE 102A

FIGURE 202 B

MODEL COST EFFECTIVENESS DIAGRAM
COLD ROLLING - RECIRCULATION SUBCATEGORY

ANNUAL COSTS - BASED ON TEN YEAR CAPITAL RECOVERY
+ INTEREST RATE 7%
+ OPERATING COSTS INCLUDE LABOR, CHEMICALS & UTILITIES
+ MAINTENANCE COSTS BASED ON 3.5% OF CAPITAL COSTS
COSTS BASED ON 272 MKG/DAY (3000 TONS/DAY) PRODUCTION
THIS GRAPH CANNOT BE USED FOR INTERMEDIATE VALUES

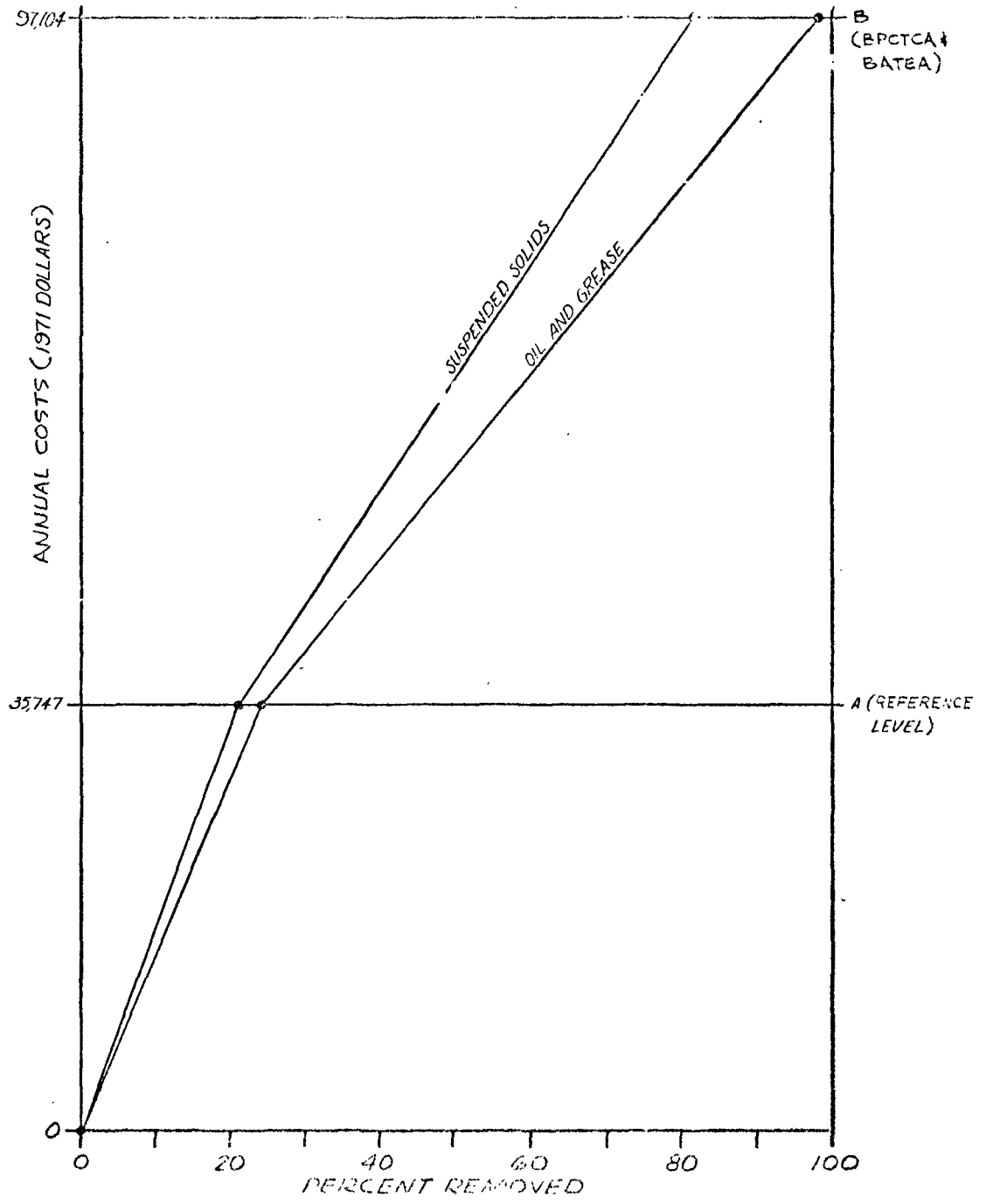

TABLE 104

BATEA - EFFLUENT LIMITATIONS GUIDELINES

SUBCATEGORY Cold Rolling - Combination

CRITICAL PARAMETERS	BATEA LIMITATIONS Kg/KKg (1) (LB/1000 LB)	BATEA LIMITATIONS mg/l (2)	CONTROL & TREATMENT TECHNOLOGY (3)	ESTIMATED (4) TOTAL COST $/KKg	ESTIMATED (4) TOTAL COST $/TON
Suspended Solids	0.0417	25	Same as BPCTCA		
Oil and Grease	0.0167	10		---	---
Dissolved Iron (5)	0.00167	1			
pH	6.0-9.0				
Flow	Most probable value for a tight recycle system's blowdown flow is 1668 liters of effluent per kkg of steel rolled (400 gal/ton); excluding all non-contact cooling water.				

(1) Kilograms per metric ton of steel rolled or pounds per 1000 pound of steel rolled.
(2) Milligrams per liter based on 1668 liters effluent per kkg of steel rolled (40 gal/ton).
(3) Available technology listed is not necessarily all inclusive nor does it reflect all possible combinations or permutations of treatment methods.
(4) Costs may vary some depending on such factors as location, availability of land and chemicals, flow to be treated, treatment technology selected where competing alternatives exist, and extent of preliminary modifications required to accept the indicated control and treatment devices. Estimated total costs shown are only incremental costs required above those facilities which are normally existing within a plant and/or have been installed as a result of complying with BPCTCA standards.
(5) This load is allowed only when these wastes are treated in combination with pickle line rinse wastewaters.

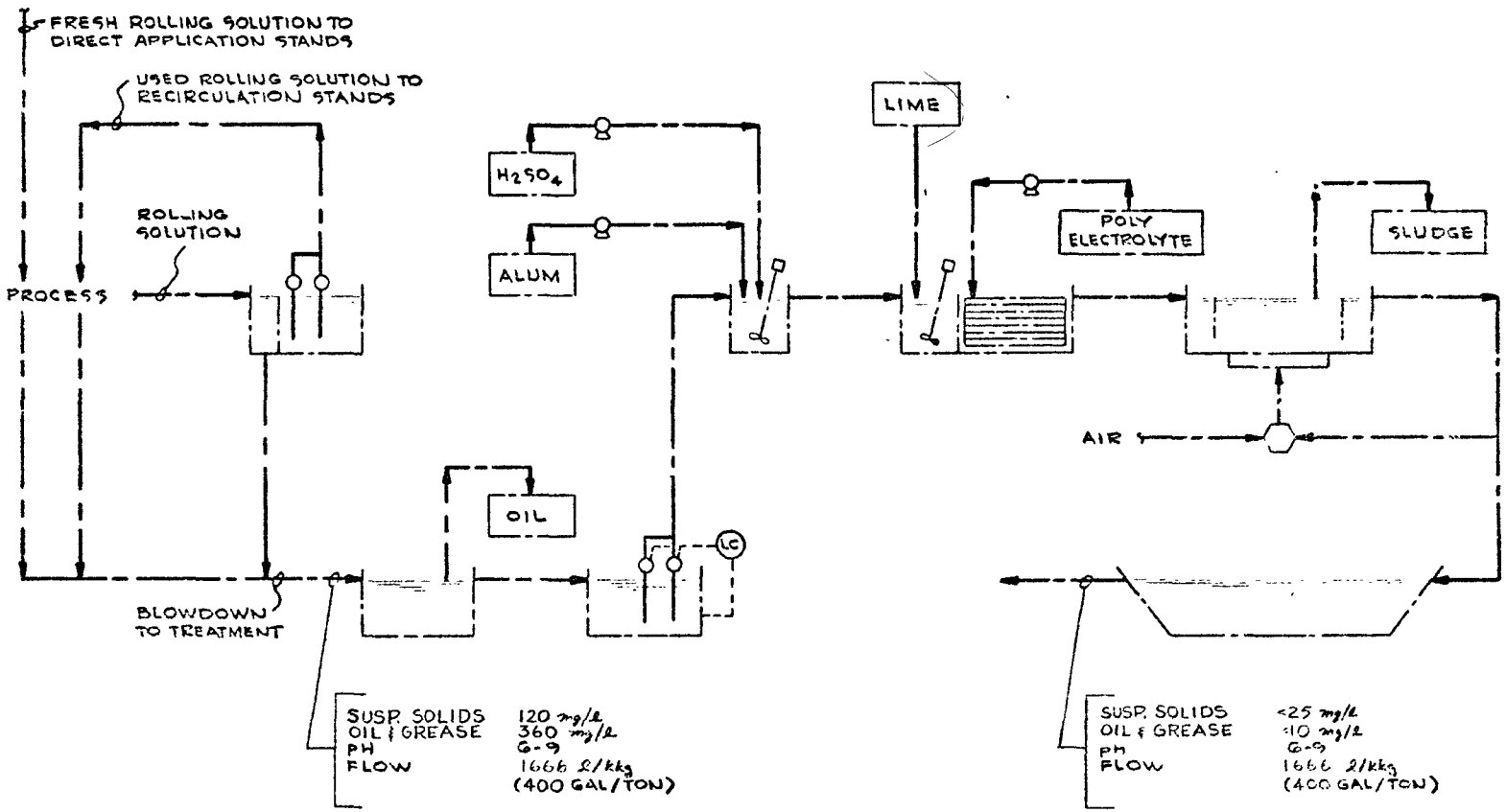

—·—·— REFERENCE LEVEL & BPCTCA MODEL
BATEA MODEL

ENVIRONMENTAL PROTECTION AGENCY
STEEL INDUSTRY STUDY
COLD ROLLING - COMBINATION SUBCATEGORY
BATEA MODEL

REV. 11-22-74, 5-22-75 | FIGURE 103A

FIGURE 1098

MODEL COST EFFECTIVENESS DIAGRAM
COLD ROLLING - COMBINATION SUBCATEGORY

ANNUAL COSTS = BASED ON TEN YEAR CAPITAL RECOVERY
+ INTEREST RATE 7%
+ OPERATING COSTS INCLUDE LABOR, CHEMICALS & UTILITIES
+ MAINTENANCE COSTS BASED ON 3.5% OF CAPITAL COSTS
COSTS BASED ON 1361 KKG/DAY (1500 TONS/DAY) PRODUCTION
THIS GRAPH CANNOT BE USED FOR INTERMEDIATE VALUES

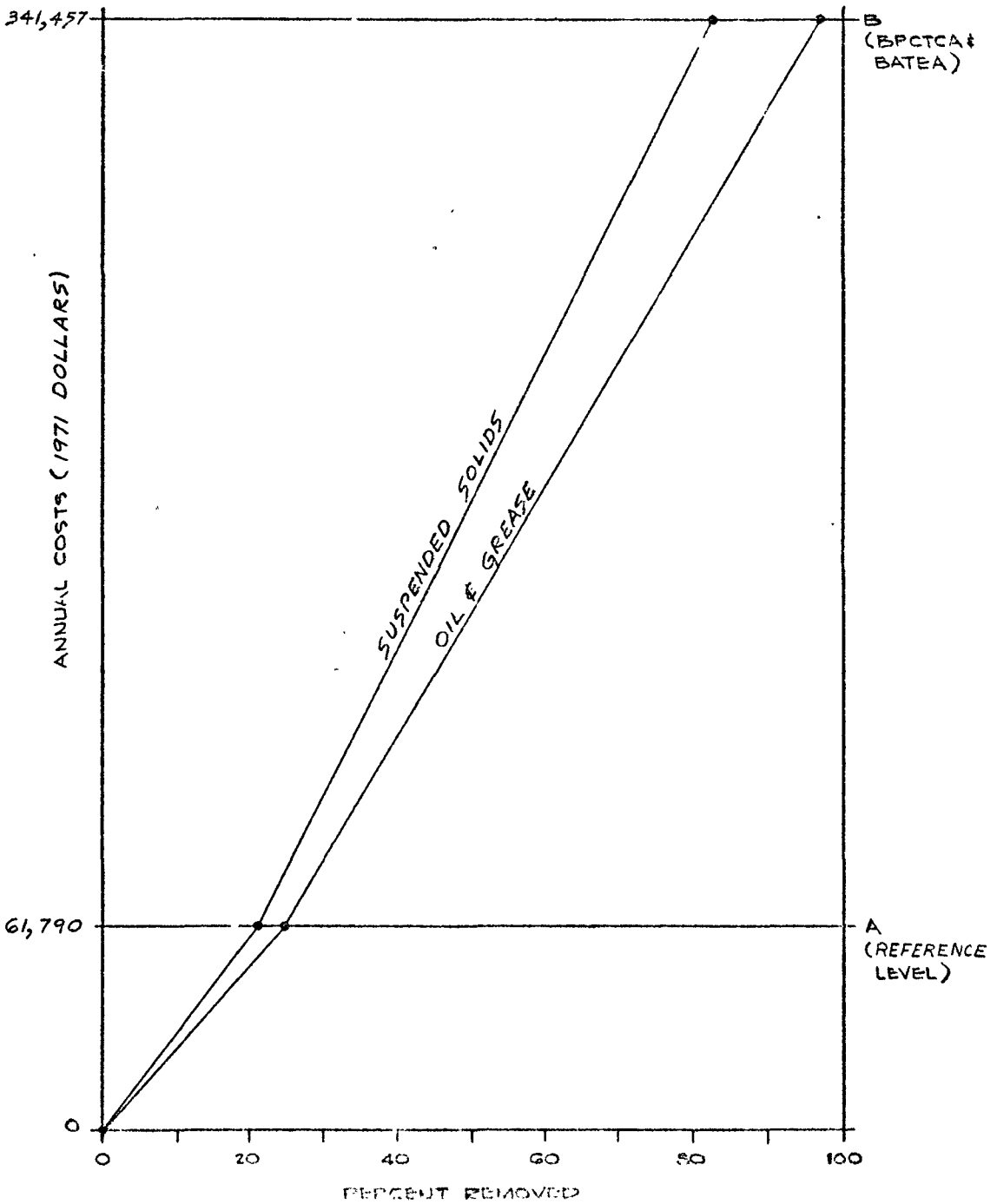

TABLE 105

BATEA - EFFLUENT LIMITATIONS GUIDELINES

SUBCATEGORY Cold Rolling - Direct Application

CRITICAL PARAMETERS	BATEA LIMITATIONS Kg/KKg[1] (LB/1000 LB)	BATEA LIMITATIONS mg/l[2]	CONTROL & TREATMENT TECHNOLOGY[3]	ESTIMATED[4] TOTAL COST $/KKg	ESTIMATED[4] TOTAL COST $/TON
Suspended Solids	0.1042	25	Same as BPCTCA.	---	---
Oil and Grease	0.0417	10			
Dissolved Iron[5]	0.0042	1			
pH	6.0-9.0				
Flow	Most probable value for a tight recycle system's blowdown flow is 4170 liters of effluent per kkg of steel rolled (1000 gal/ton); excluding all non-contact cooling water.				

(1) Kilograms per metric ton of steel rolled or pounds per 1000 pounds of steel rolled.
(2) Milligrams per liter based on 4170 liters effluent per kkg of steel rolled (1000 gal/ton).
(3) Available technology listed is not necessarily all inclusive nor does it reflect all possible combinations or permutations of treatment methods.
(4) Costs may vary some depending on such factors as location, availability of land and chemicals, flow to be treated, treatment technology selected where competing alternatives exist, and extend of preliminary modifications required to accept the indicated control and treatment devices. Estimated total costs shown are only incremental costs required above those facilities which are normally existing within a plant and/or have been installed as a result of complying with BPCTCA standards.
(5) This load is allowed only when these wastes are treated in combination with pickle line rinse wastewaters.

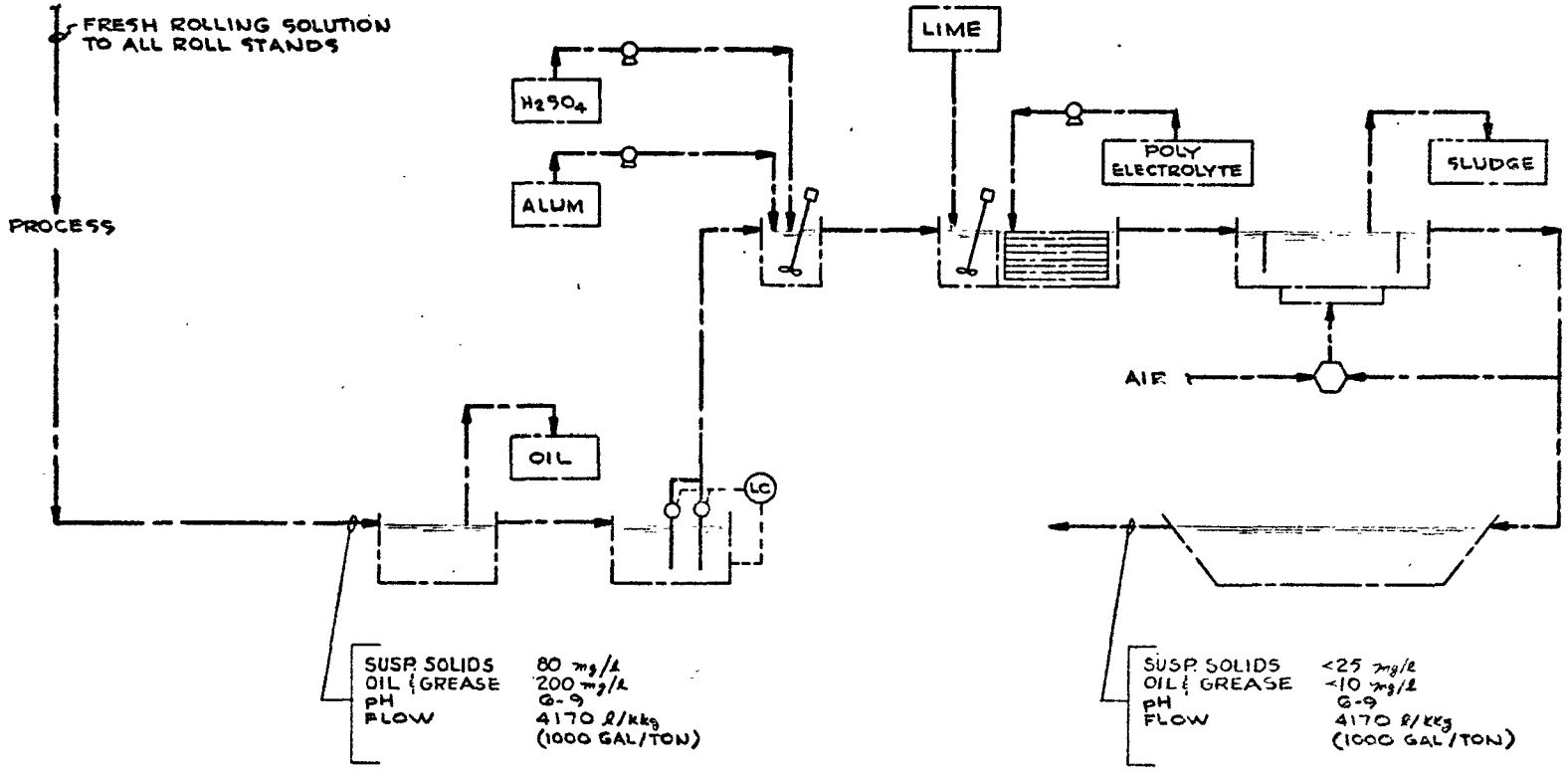

——— REFERENCE LEVEL SYSTEM & BPCTCA MODEL
BATEA MODEL

ENVIRONMETAL PROTECTION AGENCY STEEL INDUSTRY STUDY COLD ROLL NG- DIRECT APPLICATION SUBCATEGORY BATEA MODEL	
11-22-74 REV. 5-22-75	FIGURE 104-A

FIGURE 104 B

MODEL COST EFFECTIVENESS DIAGRAM
COLD ROLLING - DIRECT APPLICATION SUBCATEGORY

ANNUAL COSTS = BASED ON TEN YEAR CAPITAL RECOVERY
+ INTEREST RATE 7%
+ OPERATING COSTS INCLUDE LABOR, CHEMICALS & UTILITIES
+ MAINTENANCE COSTS BASED ON 3-5% OF CAPITAL COSTS
COSTS BASED ON 907 KKG/DAY (1000 TONS/DAY) PRODUCTION
THIS GRAPH CANNOT BE USED FOR INTERMEDIATE VALUES

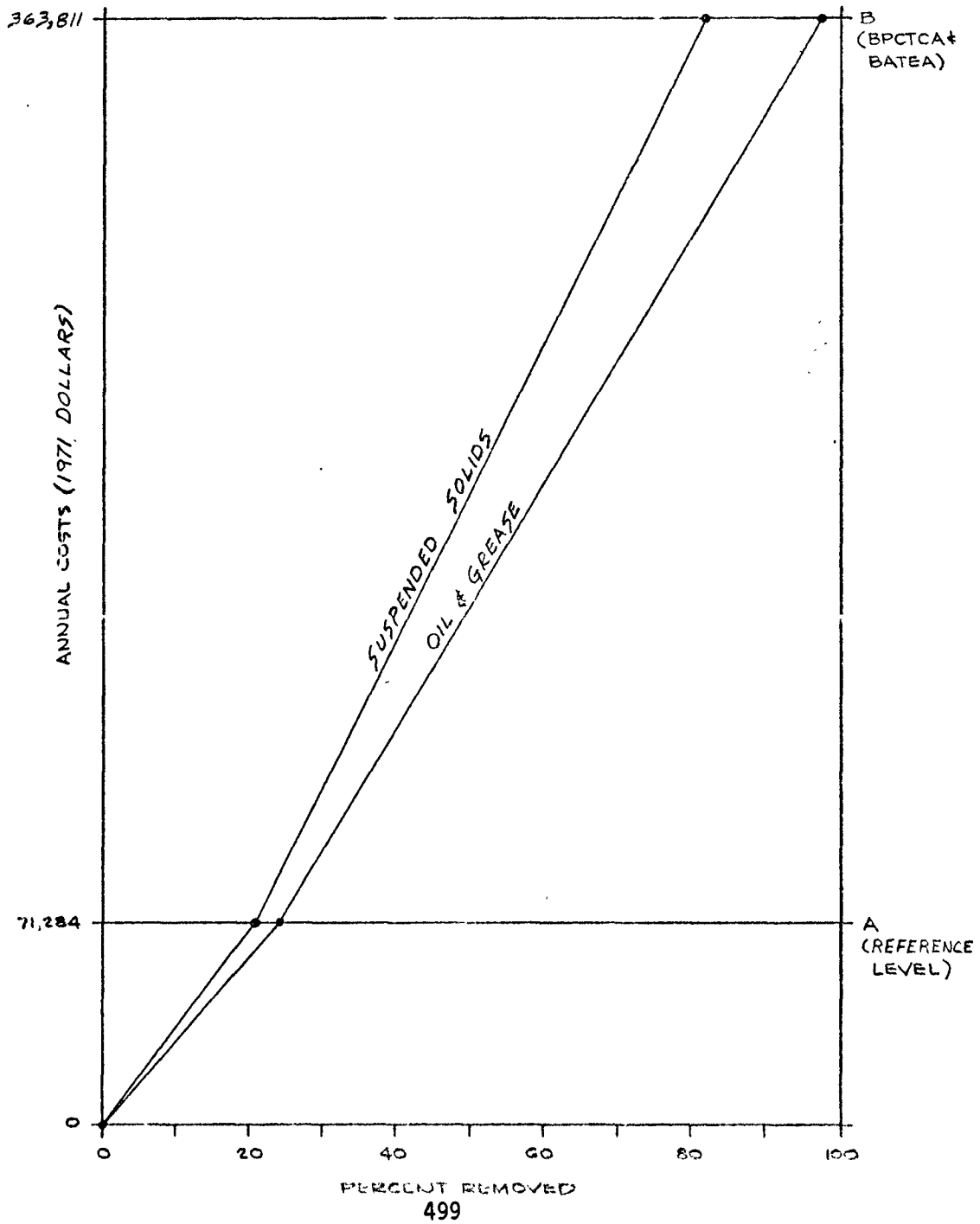

Hot Coatings - Galvanizing Operations

Flow information relative to the four plants visited is discussed in Section IX, along with the BPCTCA limitations. The recommended BATEA limits follow parameter by parameter, and are summarized in Table 106. Where necessary, estimates were made of the load reductions brought about via cascade rinsing techniques at the plant lines, and recycle of fume hood scrubber waters for plants so equipped.

Suspended Solids. A BATEA limit of 0.0104 kg/kkg (0.0209 lbs of suspended solids per ton) of steel coated is recommended, equivalent to 25 mg/l based on a 417 l/kkg (100 gal./ton) flow. An additional allowance of 0.0156 kg/kkg (0.0312 lbs/ton) is provided for plants utilizing wet fume hood scrubbers over the coating lines. One hot galvanizing plant with three coating lines of various widths, and using wet fume hood scrubbers achieves a level of 0.0206 kg/kkg (0.0411 lbs of suspended solids per ton) of galvanized strip by using equalization, mixing, lime treatment in carefully controlled steps to precipitate dissolved metals, polymer addition, clarification in a thickener, and vacuum filtration of underflow sludges. The discharge flow contains 80% of the recommended BATEA limit, this demonstrating the effectiveness of the treatment system.

Oil and Grease. A BATEA limit of 0.0042 kg/kkg (0.0083 lbs of oily matter per ton) of steel coated is recommended, equivalent to 10 mg/l based on a 417 l/kkg (100 gal./ton) flow rate. An additional allowance of 0.0063 kg/kkg (0.0125 lbs/ton) is provided for plants utilizing wet fume hood scrubbers over the coating lines. Both of the continuous strip galvanizing lines surveyed discharge oily matter at 0.10 lbs/ton of coated product, exceeding the recommended BATEA limit by a factor of five. However, the plant described above (see suspended solids) does achieve 10 mg/l in a considerably higher effluent flow rate, so the concentration limit is attainable, using presently installed equipment and technology. It is anticipated that flow reductions achieved through cascade rinsing and fume hood recycle (wherever fume hoods are used) will enable a plant to achieve the recommended BATEA limits.

Zinc. A BATEA limit of 0.00083 kg/kkg (0.0016 lbs of zinc per ton) of galvanized product is recommended, equivalent to 2 mg/l based on a 417 l/kkg (100 gal./ton) flow rate. An additional allowance of 0.00125 kg/kkg (0.0025 lbs/ton) is provided for plants utilizing wet fume hood scrubbers over the coating lines. One of the plants surveyed achieves discharge loads of only 12% of the recommended limit through

TABLE 106

BATEA - EFFLUENT LIMITATIONS GUIDELINES

SUBCATEGORY Hot Coatings - Galvanizing

CRITICAL PARAMETERS	BATEA LIMITATIONS Kg/KKg (LB/1000 LB)(1)	BATEA LIMITATIONS mg/l(2)	CONTROL & TREATMENT TECHNOLOGY(3)	ESTIMATED(4) TOTAL COST $/KKg	ESTIMATED(4) TOTAL COST $/TON
Suspended solids	0.0104 0.0156(5)	25	Use of cascade rinsing, and recycle of fume hood scrubber waters, treatment of blended wastewaters via lime to obtain optimum pH for metals precipitation, chrome reduction, then followed by clarification with polymer addition, vacuum filtration of underflows and continuous oil skimming.	0.232	0.211
Oil and Grease	0.0042 0.0063(5)	10			
Hexavalent Chromium	0.000008 0.000013(5)	0.02			
Total Chromium	~~0.000042~~ 0.000084 ~~0.000063~~(5) 0.000126	~~0.10~~ 0.20	pH neutralization		
Total Zinc	0.00083 0.00125(5)	2			
pH	6.0-9.0				

Flow for all operations: Most probable value is 417 liters of effluent per kkg of product (100 gal/ton); excluding all non-contact cooling water.

(1) Kilograms per metric ton of coated product produced or pounds per 1000 pounds of coated product produced.
(2) Milligrams per liter based on a flow of 417 liters effluent per kkg of coated product (100 gal/ton).
(3) Technology listed is not necessarily all inclusive, nor does it reflect all possible combinations or permutations of treatment methods.
(4) Costs may vary some depending on such factors as location, availability of land and chemicals, flow to be treated, treatment technology selected where competing alternatives exist, and extent of preliminary modifications required to accept the indicated control and treatment devices. Estimated total costs shown are only incremental required above those facilities which are normally existing within a plant and/or have been installed as a result of complying with BPCTCA standards.
(5) These limitations apply in addition if the galvanizing line has a fume hood scrubber. Most probable value is 626 liters of effluent per kkg of product (150 gal/ton).

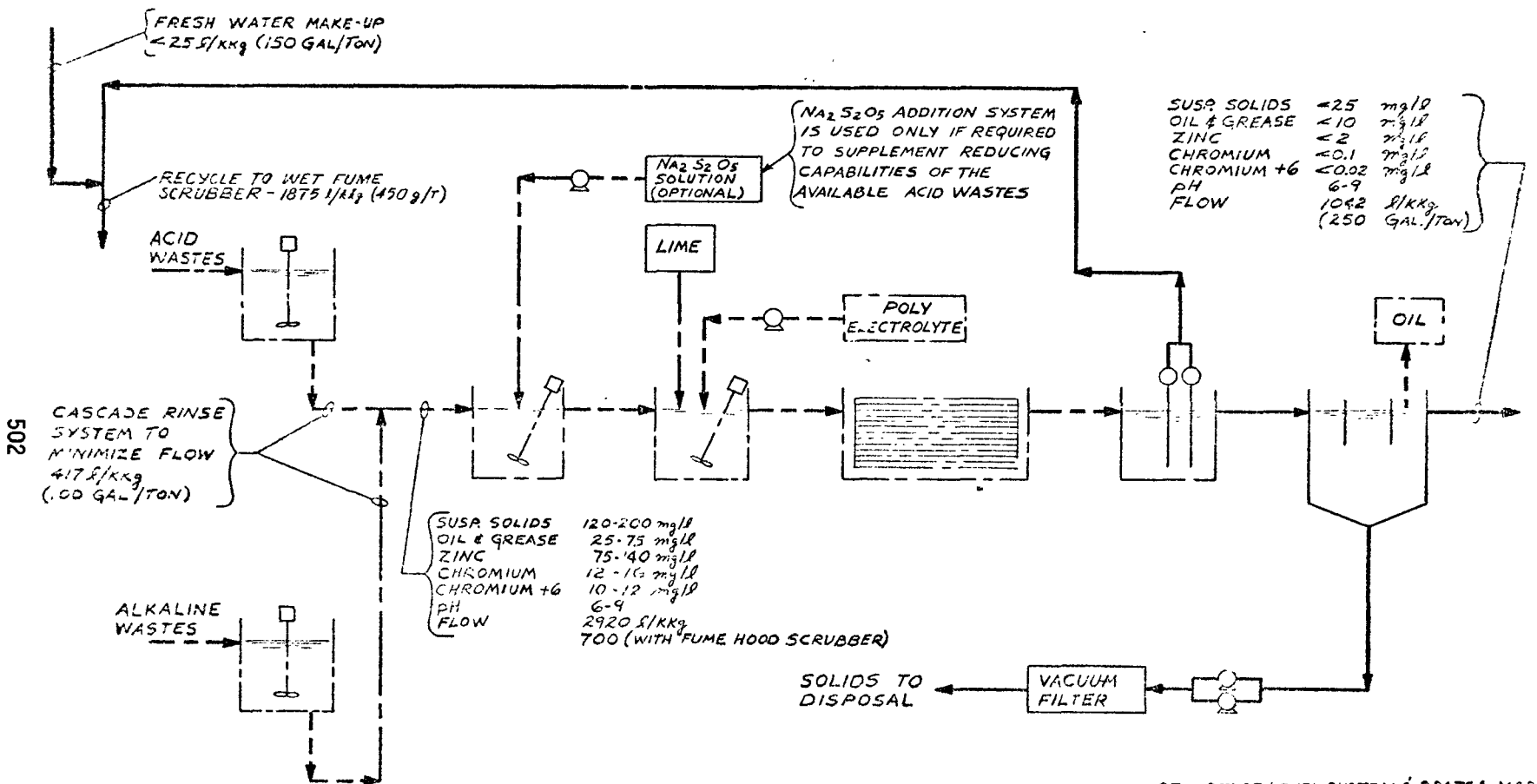

— — — REFERENCE LEVEL SYSTEM & BPCTCA MODEL
——— BATEA MODEL

ENVIRONMENTAL PROTECTION AGENCY STEEL INDUSTRY STUDY HOT COATINGS - GALVANIZING SUBCATEGORY BATEA MODEL	
REV. 11-25-74 5-22-75	FIGURE 105A

FIGURE 105 B

MODEL COST EFFECTIVENESS DIAGRAM
HOT COATING - GALVANIZING SUBCATEGORY

ANNUAL COSTS = BASED ON TEN YEAR CAPITAL RECOVERY
+ INTEREST RATE 7%
+ OPERATING COSTS INCLUDE LABOR, CHEMICALS & UTILITIES
+ MAINTENANCE COSTS BASED ON 3.5% OF CAPITAL COSTS
COSTS BASED ON 635 MKG/DAY (700 TONS/DAY) HOT COATING OPER.
THIS GRAPH CANNOT BE USED FOR INTERMEDIATE VALUES

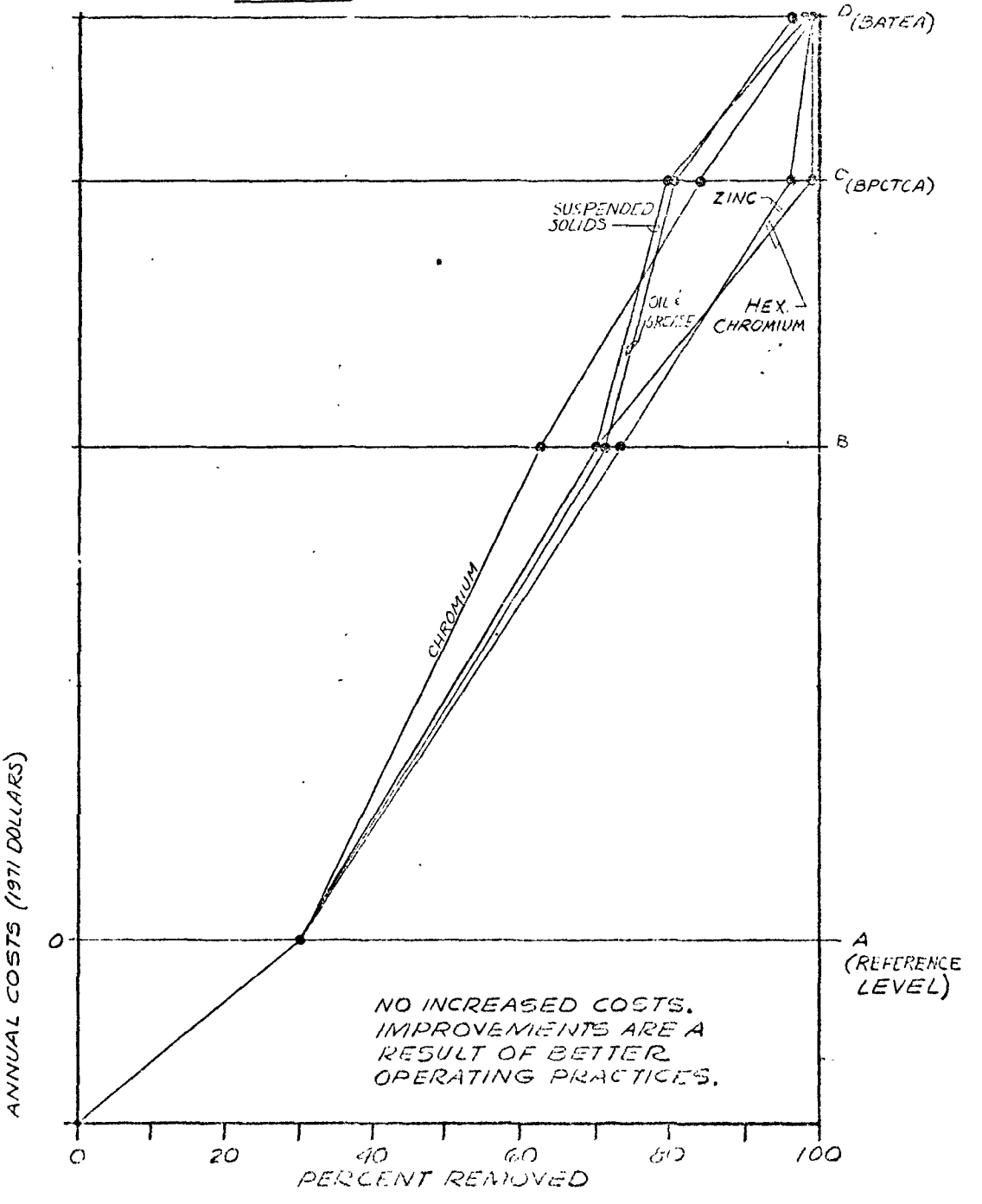

the use of equalization, mixing, lime treatment, polymer addition, and clarification in a thickener, essentially the control equipment and treatment techniques recommended for attainment of BATEA levels. Both continuous strip galvanizing plants show less than 2 mg/l zinc concentrations in their effluents, despite processing 1,100 to 1,750 tons of zinccoated product per day apiece. Thus, the recommended BATEA limit for zinc is readily attainable using conventional treatment techniques.

Hexavalent Chromium. A BATEA limitation for hexavalent chromium of 0.000008 kg/kkg (0.000016 lbs/ton) is recommended, equivalent to 0.02 mg/l based on a discharge flow of 417 l/kkg (100 gal./ton). An additional load of 0.000013 kg/kkg (0.000026 lbs/ton) is provided for plants equipped with wet fume hood scrubbers. Although both continuous strip galvanizing lines achieve the recommended concentration limits at 0.005 and 0.012 respectively, the flow rates are high enough to exceed the recommended load limitations. As flow reductions are achieved through cascade rinsing and fume hood recycling, where applicable, the recommended limits should prove attainable using the present technology and equipment, which has demonstrated the ability to reduce hexavalent chromium concentrations effectively.

Total Chromium. A BATEA limitation for total chromium has been set at 0.000084 kg/kkg (0.000168 lbs/ton), equivalent to 0.2 mg/l based on a discharge flow rate of 417 l/kkg (100 gal./ton). An additional allowance of 0.000126 kg/kkg (0.000250 lbs/ton) is provided for those galvanizing lines utilizing wet fume hood scrubbers. One of the plants surveyed is discharging total chromium at 105% of the recommended limitation, but will readily meet the limits as flow reductions via cascade rinsing and fume hood recycling are provided. The other galvanizing plant is discharging 0.86 mg/l total chromium, partly in the form of suspended solids. Tighter control of suspended solids, in addition to flow rate reductions, would be required to bring this plant into compliance.

pH. As in all other subcategories, the BATEA limitations for pH specify a range from 6.0 to 9.0. Since treatment is required to reach the BATEA limitations for zinc and chromium, the attainment of pH limitations will not require any additional equipment or expense.

Hot Coatings - Terne Operations

Since both of the terne-plating lines surveyed were discharging wastewaters after once-through use without treatment, but rather with control to minimize dragout, BATEA limitations for all parameters were set at levels anticipated in effluents from systems similar to those used in the Hot Coatings - Galvanizing subcategory. Where necessary, estimates included the beneficial effects of load reductions brought about through use of cascade rinse and fume hood scrubber recycle technologies. The recommended BATEA limitations follow parameter by parameter, and are summarized in Table 107.

Suspended Solids. A BATEA limitation for suspended solids of 0.0104 kg/kkg (0.0209 lbs/ton) of steel coated is recommended, equivalent to 25 mg/l based on a discharge flow of 417 l/kkg (100 gal./ton). An additional allowance of 0.0156 kg/kkg (0.0312 lbs/ton), equivalent to 25 mg/l in a flow of 626 l/kkg (150 gal./ton) is provided for plants using wet fume hood scrubbers in conjunction with the coating operation. Since both plants surveyed were discharging wastewater oncethrough, both exceed the recommended limit, even the one with only 9 mg/l suspended solids in the effluent. Use of the recommended flow reduction techniques, cascade rinsing and fume hood scrubber recycle, together with lime treatment to precipitate metals, followed by polymer addition and clarification with oil skimming would enable terne plates to attain the BATEA suspended solids limits.

Oil and Grease. A recommended BATEA limit for oils and greases is set at 0.0042 kg/kkg (0.0084 lbs/ton), equivalent to 10 mg/l based on a discharge flow of 417 l/kkg (100 gal./ton) of steel coated. An added load of 0.0063 kg/kkg (0.0125 lbs/ton) is permitted for those plants using wet fume hood scrubbers in conjunction with terne-plating operations. Although both plants surveyed do discharge oil and grease at less than 5 mg/l in their effluents, neither plant attains the required BATEA limit, since they operate on a oncethrough basis at flows of five to nine times the BATEA basis flow. The treatment system recommended above for suspended solids removal would efficiently eliminate oils and greases as well, both through provision of continuous oil skimming, and via the scrubbing action of the highly absorbent flocs generated during removal of dissolved metals. This treatment technology has proven effective on wastewaters from a variety of other subcategories.

Tin. A BATEA limit for tin of 0.00083 kg/kkg (0.00167 lbs/ton) of terne-coated product is set, equivalent to 2 mg/l based on a 417 l/kkg (100 gal./ton) flow rate. An

TABLE 107

BATEA - EFFLUENT LIMITATIONS GUIDELINES

SUBCATEGORY Hot Coatings - Terne

CRITICAL PARAMETERS	BATEA LIMITATIONS Kg/KKg (1) (LB/1000 LB)	BATEA LIMITATIONS mg/l (2)	CONTROL & TREATMENT TECHNOLOGY (3)	ESTIMATED (4) TOTAL COST $/KKg	ESTIMATED (4) TOTAL COST $/TON
Suspended Solids	0.0104 0.0156 (5)	25	Use of cascade rinsing, and recycle of fume hood scrubber waters, treatment of blended wastewaters via lime to obtain optimum pH for metals precipitation, followed by clarification with polymer addition, vacuum filtration of underflows and continuous oil skimming. pH neutralization	0.232	0.211
Total Tin	0.00083 0.00125 (5)	2			
Oil and Grease	0.0042 0.0063 (5)	10			
Total Lead	0.000104 0.000156 (5)	0.25			
pH	6.0-9.0				
Flow for all operations:	Most probable value is 417 liters of effluent per kkg of coated product (100 gal/ton).				

(1) Kilograms per metric ton of coated product produced or pounds per 1000 pounds of coated product produced.
(2) Milligrams per liter based on a flow of 417 liters effluent per kkg of coated product (100 gal/ton).
(3) Technology listed is not necessarily all inclusive, nor does it reflect all possible combinations or permutations of treatment methods.
(4) Costs may vary some depending on such factors as location availability of land and chemicals, flow to be treated, treatment technology selected where competing alternatives exist, and extent of preliminary modifications required to accept the indicated control and treatment devices. Estimated total costs shown are only incremental required above those facilities which are normally existing within a plant and/or have been installed as a result of complying with BPCTCA standards.
(5) These limitations apply in addition if the terne line has a fume hood scrubber. Most probable value is 626 liters of effluent per kkg of coated product (150 gal/ton).

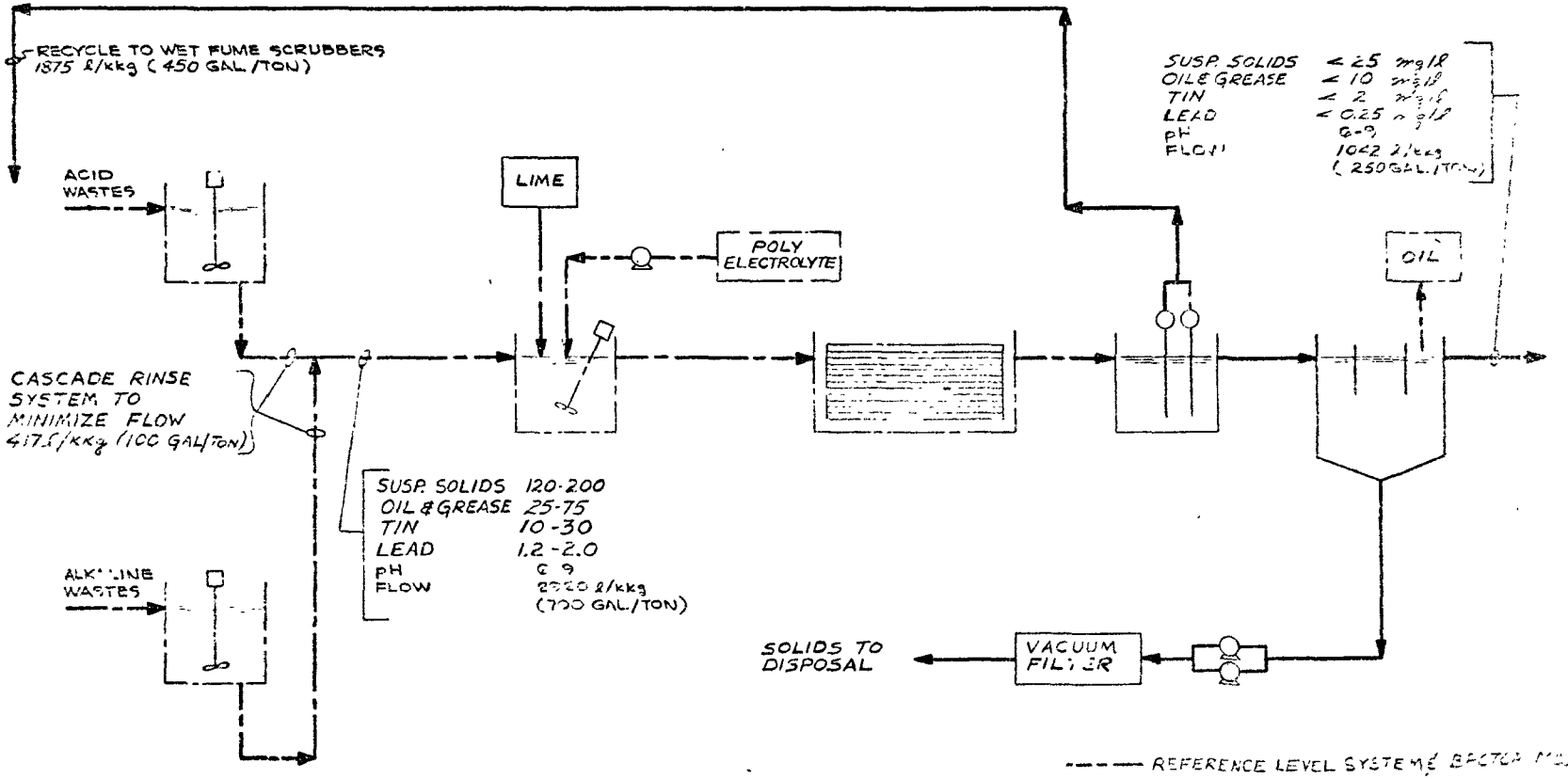

---- REFERENCE LEVEL SYSTEMS BASTA MODEL
——— BATEA MODEL

ENVIRONMENTAL PROTECTION AGENCY
STEEL INDUSTRY STUDY
HOT COATINGS - TERNE
SUBCATEGORY
BATEA MODEL

11-25-74
REV. 5-22-75

FIGURE 106A

FIGURE [illegible]
MODEL COST EFFECTIVENESS DIAGRAM
HOT COATING - TERNE SUBCATEGORY

ANNUAL COSTS - BASED ON TEN YEAR CAPITAL RECOVERY
+ INTREST RATE 7%
+ OPERATING COSTS INCLUDE LABOR, CHEMICALS & UTILITIES
+ MAINTENANCE COSTS BASED ON 3.5% OF CAPITAL COSTS

COSTS BASED ON 635 KKG/D AY (700 TONS/DAY) HOT COATING OPER.
THIS GRAPH CANNOT BE USED FOR INTERMEDIATE VALUES

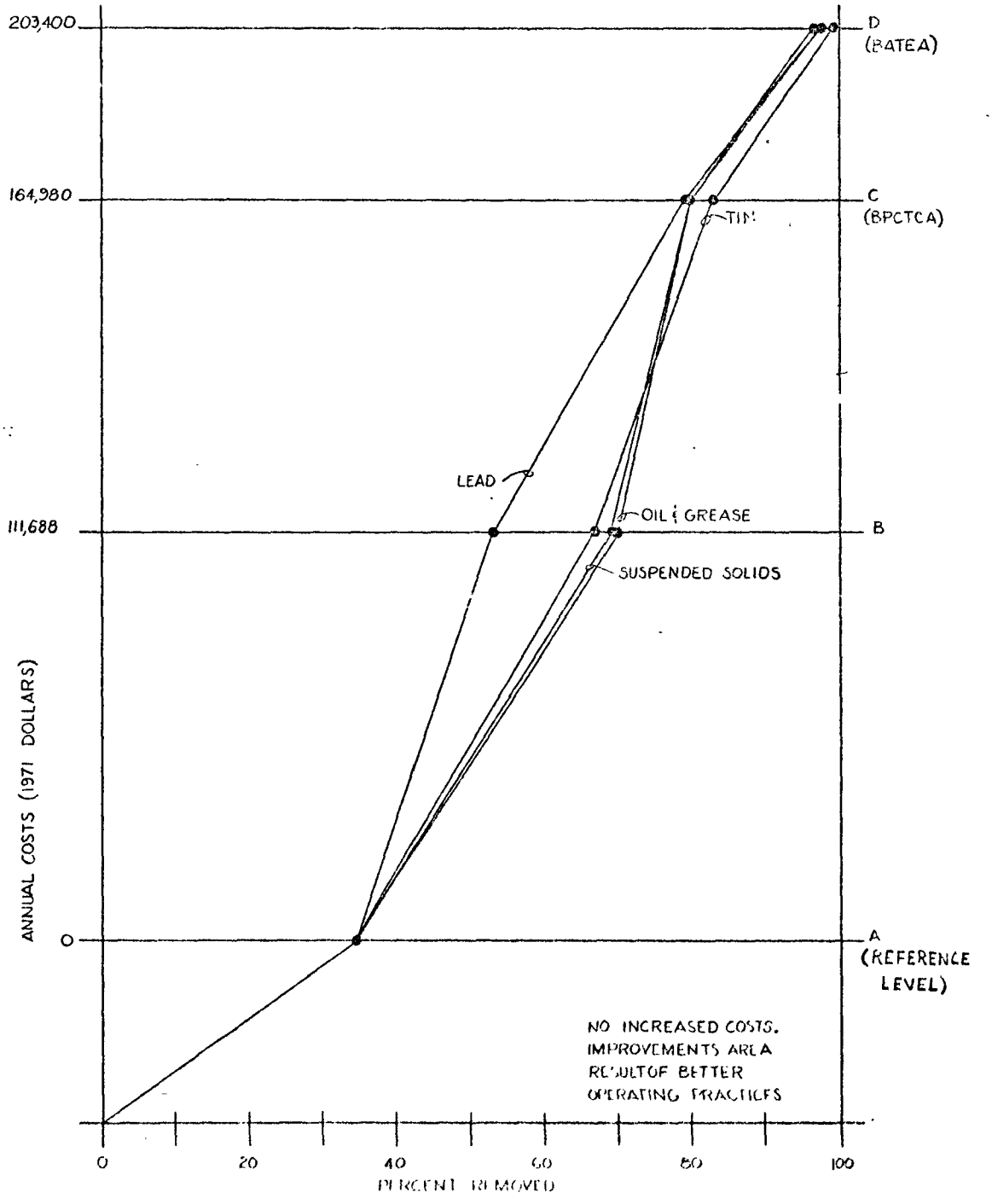

additional allowance of 0.00125 kg/kkg (0.0025 lbs/ton) is provided for plants utilizing wet fume hood scrubbers, equivalent to 2 mg/l based on a flow of 626 l/kkg (150 gal./ton). Although both plants surveyed were discharging tin at less than 2 mg/l concentration, the use of once-through wastewater flows prevent these plants from attaining the BATEA limits. However, the technology described under suspended solids, coupled with the technique for reducing flows, would enable terne-coating operators to comply with BATEA load requirements.

Lead. A BATEA limit of 0.000104 kg/kkg (0.000209 lbs of lead per ton) of coated product is recommended, equivalent to 0.25 mg/l based on a 417 l/kkg (100 gal./ton) flow rate. An additional allowance of 0.000156 kg/kkg (0.000312 lbs/ton) is provided for plants using wet fume hood scrubbers. Data were available from two plants, indicating an average effluent load of 0.0005 kg/kkg (0.001 lbs/ton) of product, about twice the recommended limit. Currently, both lines provide no wastewater treatment and attain this low discharge load by maintaining operating conditions on the line with a high degree of attention to minimizing dragout of solutions and reducing water flows wherever possible. The treatment technique used to achieve BATEA suspended solids limitation levels will yield lead concentrations at or below the recommended levels.

pH. As in all subcategories, the BATEA pH limits require a range between 6.0 to 9.0. Since pH control will be required to attain BATEA limits on lead and tin, no additional equipment or expense will be required.

Miscellaneous Runoffs - Storage Piles - Coal, Stone, and Ore

These three miscellaneous runoffs were discussed in general terms in Section IX, but no BPCTCA limitations were specified, indicating instead that such limitations will be deferred until such time as BATEA limits apply. The best available technology economically achievable is considered to be perimeter collection, storage, chemical flocculation, neutralization and sedimentation. The use of impervious liners or other means to preclude subsurface drainage has not been included in the BATEA technology due to the absence of demonstrated cost effectiveness.

Based upon the rationale and justification used to set suspended solids and pH limits at the BATEA level for the other industry subcategories covered by the segment and the above discussion, limitations are set as follows: suspended solids limit of 25 mg/l and a pH range of 6.0 to 9.0.

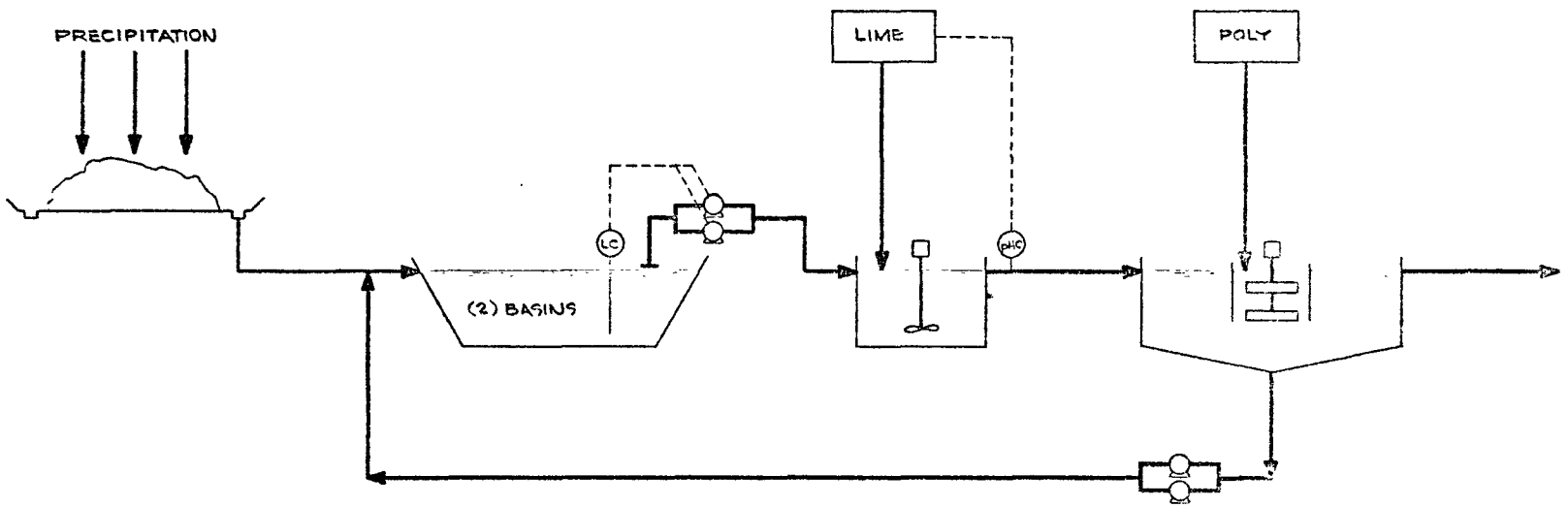

ENVIRONMENTAL PROTECTION AGENCY
STEEL INDUSTRY STUDY
MISCELLANEOUS RUNOFFS
SUBCATEGORY
BATEA MODEL

12-11-74
REV 6-5-75

FIGURE 107

Concentration limits on specific pollutants present in the wastewater which are due to leaching from the stockpile must be set on an individual basis wherever appropriate.

The installation costs of the BATEA collection and treatment systems described above for a typical coal, stone, and ore pile associated with a 5,000 ton per day ironmaking facility would cost $600,000, $364,000, and $463,000, respectively. This included costs for the collection and holding system, and a clarifier with associated acid or alkaline and polymer chemical feed systems.

The criteria and assumptions used to provide the basis for sizing and costing these facilities include:

	Coal	Stone	Ore
Raw material usage, #/ton of iron	2860	1000	4000
Storage capacity, days	90	180	180
Bulk density, #/ft3	50	155	250
Stockpile height, ft.	25	40	40
Max. mean 24 hr. rainfall, inches	2.5	2.5	2.5
Runoff coefficient	0.90	0.90	0.90

The stockpile size and surface area is calculated from the raw material usage, storage capacity, bulk density, and stockpile height parameters. The rainfall value chosen represents the greatest mean maximum 24 hour rainfall generally experienced in the western, north central, and northeastern part of the United States. (Source: The 1970 National Atlas of the United States.) The runoff coefficient of 0.90 was assumed since the proposed subsurface and surface runoff collection systems should collect all rainfall except that accounted for by evaporation.

It should be particularly obvious that the system costs based upon the above set of criteria and assumptions represent only one specific case of the probable cost of such a system. A great variety of alternatives in size and

cost exist for this basic treatment concept and must be determined and applied on a site-by-site basis. The particular system described above, although not rigorous for all applications, does provide a reasonable cost estimate for the particular set of criteria and assumptions used.

The basic concept of collection and storage is justifiable in every application. Even though logistics and economics may preclude the application of provisions for impervious sealing of the stockpile base for existing piles, there should generally be no restriction to prevent perimeter collection of a large part of the runoff. Once collected, at least minimal treatment for suspended solids and pH should be applied under BATEA wherever site or area specific pollutants appear in excessive concentrations in the runoff. The treatment of these specific pollutants where they are identical to critical parameters identified in this study, should follow the treatment and control technology and effluent guidelines established for these parameters in other subcategories. In other cases, treatment and control technology and limits will have to be formulated and applied on a case-by-case basis.

Since it is not possible to present a uniform set of parameters on which to design, size, and cost these systems, some discussion of the variables involved and their impact on the completed system is in order. They can be described as follows:

Stockpile Surface Area. This, of course, depends heavily upon the capacity of the ironmaking facility, its production rate, the number of days stockpiled inventory, the height of the pile, and the amount of sinter charge employed. Although coal is converted to coke before charging to the blast furnace, the coal supply will generally keep pace with blast furnace production since coke produced is generally used immediately in the blast furnace.

Rainfall. Rainfall intensity, frequency, and duration can vary significantly from area to area in this country. In certain areas, the use of mean maximum 24 hour rainfall to estimate the load on the system may be sufficient. However, in other areas, the use of figures for the 2 year, 5 year, 10 year, etc., 24 hour storms may be more appropriate. In other areas, where definite wet seasons occur, the system design may have to be based upon maximum consecutive days of rainfall in the area. Each case will depend on weather conditions specific to the area and will have to be determined on that basis.

Runoff Coefficients. Again, case-by-case estimates may be needed. Runoff coefficients are generally average numbers reflecting runoff throughout the storm cycle. During the peak of an intensive, long duration rainfall, the coefficient may approach 100%. However, during brief rains, at the start of rainfall, and after rainfall has ended, these coefficients may be considerably lower. The coefficient in all cases will require conservative estimation to avoid underdesign of the system.

Treatment Alternatives. As mentioned previously, the basic treatment system for will require sedimentation and pH adjustment, with more specific treatment processes employed under BATEA where additional constituents appear. However, this does not preclude the possibility of using treatment facilities associated with other subcategory facilities in the mill. With the right combination of rainfall load and storage capacity, flow may be effectively metered to allow such a possibility.

In addition, in some areas of the country where evaporation exceeds rainfall, it may be possible to collect and store the runoff during wet periods, and later spray evaporate runoff during dry periods and thus achieve zero discharge.

Another factor that may affect the size of treatment facilities will be land area available for storage of runoff. Where land is at a premium, pond area will have to be minimized and treatment capacity maximized. Where land availability is not restrictive, the opposite may be true.

The 2.5 inch 24 hour rainfall used as the basis for runoff collection and treatment facilities for storage piles is based upon mean annual maximum 24 hours rainfall data in the USGS National Atlas. This data map indicates that the vast majority of steel industry production is centered in areas of the country having a mean annual maximum 24 hour rainfall equal to 2.5 inches or less.

Although it is realized that maximum rainfall data is highly site specific, and in many cases should be based upon 10, 25, etc. years storms, no other source of data was available that could provide a general estimate covering most of the areas of the country where steel production is located.

The following considerations were used for the design parameters for the range of treatment technolgoy:

Max. Design Rainfall = 2.5 inches/day, 45"/year

Runoff Coef. (including seepage) = 0.90

Storage Capacity = One Day Max. Rain (2.5 inches)

Pump Storage Basins Dry in 5 days

Stockpile Enclosure Embankment = 2' High

Collection Ditches: 3' Deep, 4' Wide

Sublining 3.5' Deep

Lime Dosage = 75 mg/l

TSS of Runoff = 200 mg/l

Poly Dosage = 2 mg/l

Neutralization Tank TR = 5 minutes

Because the runoff storage basins are designed to be pumped out through a treatment facility over a five day period, any additional rainfall during the period could exceed the storage capacity of the basins. Therefore, the limitations will apply only when the rainfall is 2.5 inches or less in any preceeding five day period.

Miscellaneous Runoffs - Casting and Slagging

The recommended BATEA limitations for casting and slagging operations is the same as the BPCTCA limitations discussed in Section IX; namely, no discharge of process (i.e., contact) wastewater pollutants from ingot casting, pig casting or slagging operations. This technology represents current general practice for such operations.

Noncontact Cooling Water Recirculation System Blowdown

The treatment and control of wastewaters blown down from noncontact cooling water recirculation systems was discussed in detail in Section IX, and BPCTCA concentration limits were specified. Whereas chemical flocculation using polymers or other flocculants was described as a possible addition to lime precipitation systems for BPCTCA levels, it will most likely be required to attain the more rigorous concentration limits for BATEA levels. The BATEA ELGs for this subcategory have been set as follows:

Suspended Solids	-	25 mg/l
Total Chromium	-	0.2 mg/l

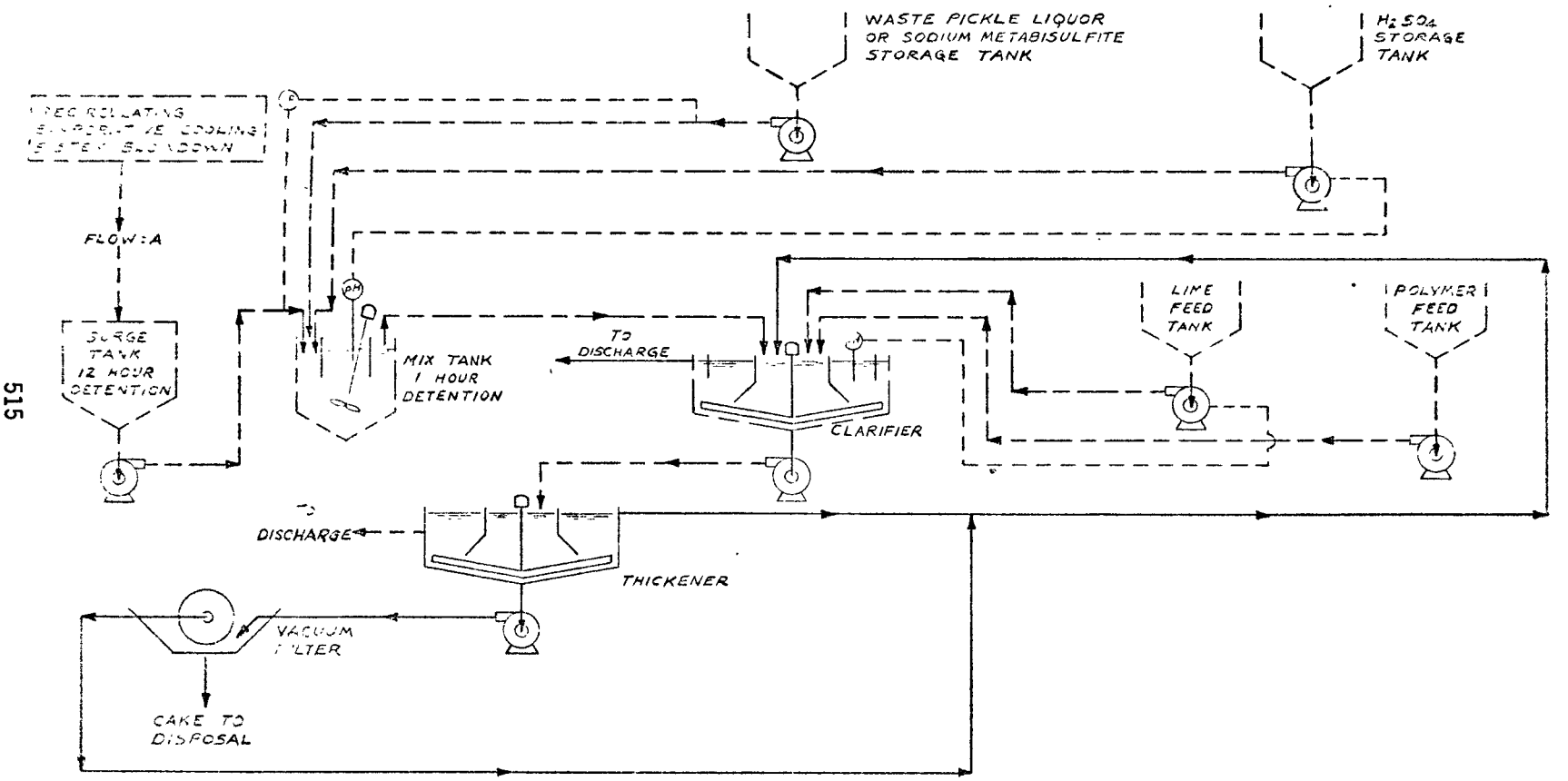

SUBCATEGORIES	SYSTEM FLOWS & CAPACITIES FLOW - A
BASIC OXYGEN FURNACE	6.31 L/SEC. (100 GPM)
OPEN HEARTH FURNACE	3.79 L/SEC. (60 GPM)
ELECTRIC ARC FURNACE	2.52 L/SEC. (40 GPM)
VACUUM DEGASSING	0.32 L/SEC. (5 GPM)
CONTINUOUS CASTING	5.05 L/SEC. (80 GPM)
HOT FORMING	12.62 L/SEC. (200 GPM)
PIPE & TUBES	1.26 L/SEC. (20 GPM)

——— REFERENCE LEVEL SISTEM & BPCTCA MODEL
——— BATEA MODEL

ENVIRONMENTAL PROTECTION AGENCY
STEEL INDUSTRY STUDY
NON-CONTACT COOLING WATER BLOWDOWN
SUBCATEGORY
BATEA MODEL

FIGURE 108

Hexavalent Chromium	-	0.02 mg/l
Zinc	-	2.0 mg/l
Phosphorous	-	8.0 mg/l
pH	-	6.0 to 9.0

Utility Area Wastewaters

The treatment and control of utility area wastewaters was discussed in detail in Section IX, and BPCTCA concentration limits were specified. Corresponding BATEA concentration limits for this subcategory are set as follows:

Suspended Solids	-	25 mg/l
pH	-	6.0 to 9.0

To attain these limits, the addition of chemical flocculation to the BPCTCA system will probably be required.

Maintenance Department Wastewaters

The treatment and control of maintenance department wastewaters was discussed in detail in Section IX, and BPCTCA concentration limits were specified. Corresponding BATEA concentration limits for this subcategory are set as follows:

Suspended Solids	-	25 mg/l
Oil and Grease	-	10 mg/l
pH	-	6.0 to 9.0

To attain these limits, the addition of chemical flocculation to the BPCTCA system will probably be required.

Central Treatment

For all central treatment systems (as described in Section IX), the allowable BATEA effluent loads for discharge will be the sum of the BATEA loads from regulated sources, plus the loads determined from the flow rates from unregulated sources multiplied by the following allowable BATEA concentrations:

Suspended Solids	-	25 mg/l
Oil and Grease	-	10 mg/l
Total Chromium	-	0.2 mg/l
Hexavalent Chromium	-	0.02 mg/l
Phosphorus	-	8 mg/l
Zinc	-	2 mg/l
pH	-	6.0 to 9.0

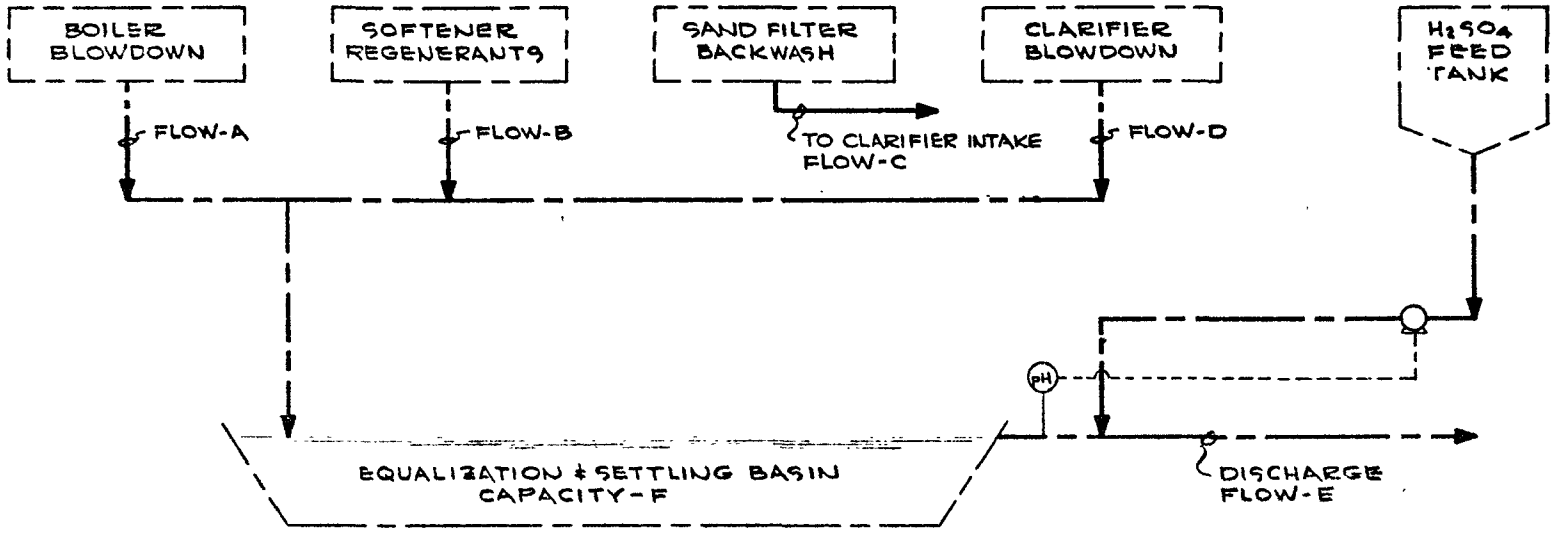

SUBCATEGORIES	SYSTEM FLOWS & CAPACITIES					
	FLOW-A	FLOW-B	FLOW-C	FLOW-D	FLOW-E	CAPACITY-F
BY-PRODUCT COKE MAKING	0.32 ℓ/SEC 5 GPM	0.69 ℓ/SEC 11 GPM	0.19 ℓ/SEC 3 GPM	0.06 ℓ/SEC 1 GPM	1.07 ℓ/SEC 17 GPM	113550 LITERS 30,000 GALS.
VACUUM DEGASSING	0.06 ℓ/SEC 1 GPM	0.32 ℓ/SEC 5 GPM	0.06 ℓ/SEC 1 GPM	0.06 ℓ/SEC 1 GPM	0.44 ℓ/SEC 7 GPM	45420 LITERS 12,000 GALS.
PICKLING-HCl-H_2SO_4-ALL CONCENTRATE SUBCATEGORIES	0.03 ℓ/SEC 0.5 GPM	0.13 ℓ/SEC 2.1 GPM	0.04 ℓ/SEC 0.6 GPM	0.01 ℓ/SEC 0.2 GPM	0.18 ℓ/SEC 2.8 GPM	18925 LITERS 5,000 GALS.

—·—·— REFERENCE LEVEL SYSTEM & BPCTCA MODEL
——— BATEA MODEL

ENVIRONMENTAL PROTECTION AGENCY
STEEL INDUSTRY STUDY
UTILITY AREA WASTEWATER SYSTEM
COKE MAKING, DEGASSING & PICKLING CONCENTRATES SUBCATEGORY BATEA MODEL

REV 12-13-74, 6-5-75 | FIGURE 109-1

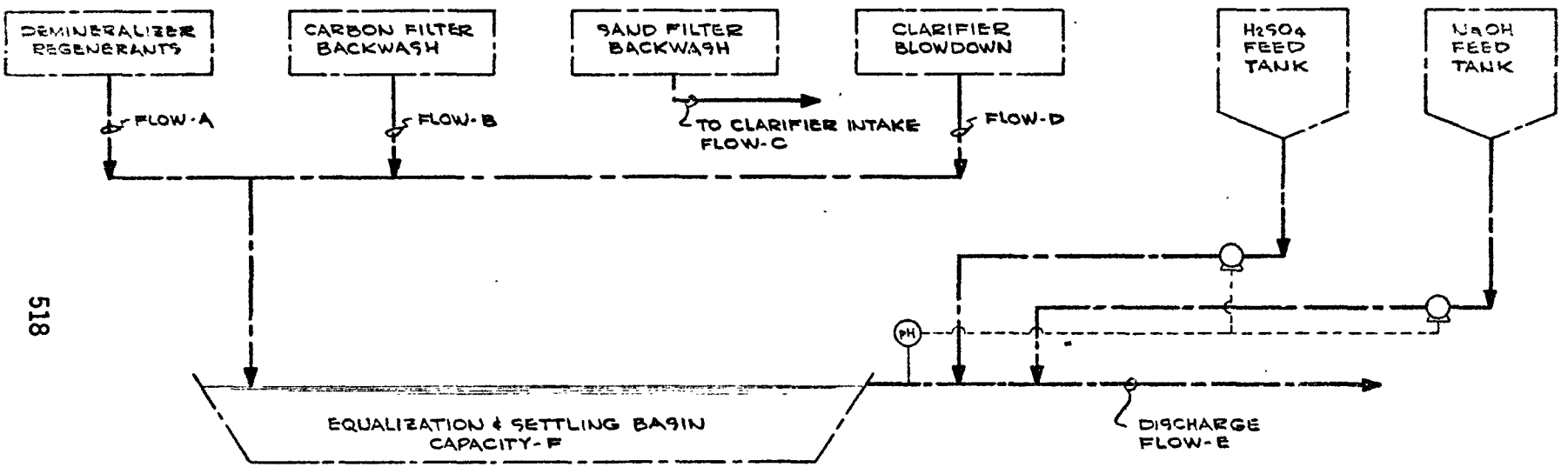

SUBCATEGORIES	SYSTEM FLOWS & CAPACITIES					
	FLOW-A	FLOW-B	FLOW-C	FLOW-D	FLOW-E	CAPACITY-F
HOT COATINGS	4.54 ℓ/SEC 72 GPM	1.01 ℓ/SEC 16 GPM	1.01 ℓ/SEC 16 GPM	0.19 ℓ/SEC 3 GPM	5.74 ℓ/SEC 91 GPM	586675 LITERS 155,000 GALS.
COLD COATINGS	26.88 ℓ/SEC 426 GPM	5.81 ℓ/SEC 92 GPM	6.12 ℓ/SEC 97 GPM	1.26 ℓ/SEC 20 GPM	33.95 ℓ/SEC 538 GPM	3785000 LITERS 1,000,000 GALS

——— REFERENCE LEVEL SYSTEM & BPCTCA MODEL
——— BATEA MODEL

ENVIRONMENTAL PROTECTION AGENCY
STEEL INDUSTRY STUDY
UTILITY AREA WASTEWATER SYSTEM
HOT & COLD COATINGS SUBCATEGORIES
BATEA MODEL

REV 12-26-74, 6-5-75 | FIGURE 109-2

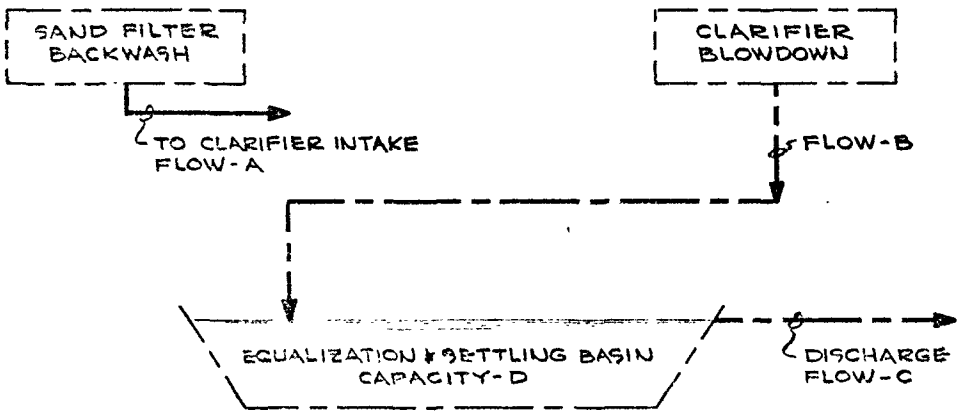

SUBCATEGORIES	SYSTEM FLOWS & CAPACITIES			
	FLOW-A	FLOW-B	FLOW-C	CAPACITY-D
BASIC OXYGEN FURNACE	0.63 ℓ/SEC 10 GPM	0.13 ℓ/SEC 2 GPM	0.63 ℓ/SEC 10 GPM	75700 LITERS 20,000 GALS.
OPEN HEARTH FURNACE	0.38 ℓ/SEC 6 GPM	0.06 ℓ/SEC 1 GPM	0.38 ℓ/SEC 6 GPM	37850 LITERS 10,000 GALS.
ELECTRIC ARC FURNACE	0.25 ℓ/SEC 4 GPM	0.06 ℓ/SEC 1 GPM	0.25 ℓ/SEC 4 GPM	37850 LITERS 10,000 GALS.
CONTINUOUS CASTING	4.67 ℓ/SEC 74 GPM	1.01 ℓ/SEC 16 GPM	4.67 ℓ/SEC 74 GPM	492050 LITERS 130,000 GALS.
HOT FORMING-ALL SUBCATEGORIES	1.26 ℓ/SEC 20 GPM	0.32 ℓ/SEC 5 GPM	1.26 ℓ/SEC 20 GPM	189260 LITERS 50,000 GALS.
HOT WORKED PIPE AND TUBES	0.06 ℓ/SEC 1 GPM	0.06 ℓ/SEC 1 GPM	0.06 ℓ/SEC 1 GPM	11355 LITERS 3,000 GALS
PICKLING-HCl-H_2SO_4-ALL RINSE SUBCATEGORIES	2.84 ℓ/SEC 45 GPM	0.63 ℓ/SEC 10 GPM	2.84 ℓ/SEC 45 GPM	302800 LITERS 80,000 GALS.
COLD ROLLING-ALL SUBCATEGORIES	2.21 ℓ/SEC 35 GPM	0.44 ℓ/SEC 7 GPM	2.21 ℓ/SEC 35 GPM	230895 LITERS 61,000 GALS.

——— REFERENCE LEVEL SYSTEM & BATCA MODEL
——— BATEA MODEL

ENVIRONMENTAL PROTECTION AGENCY STEEL INDUSTRY STUDY UTILITY AREA WASTEWATER SYSTEM STEEL-MAKING, CASTING, HOT FORMING COLD ROLLING, & PICKLING AUXILIARY SUBCATEGORIES BATEA MODEL	
12-17-74 REV 6-5-75	FIGURE 109-3

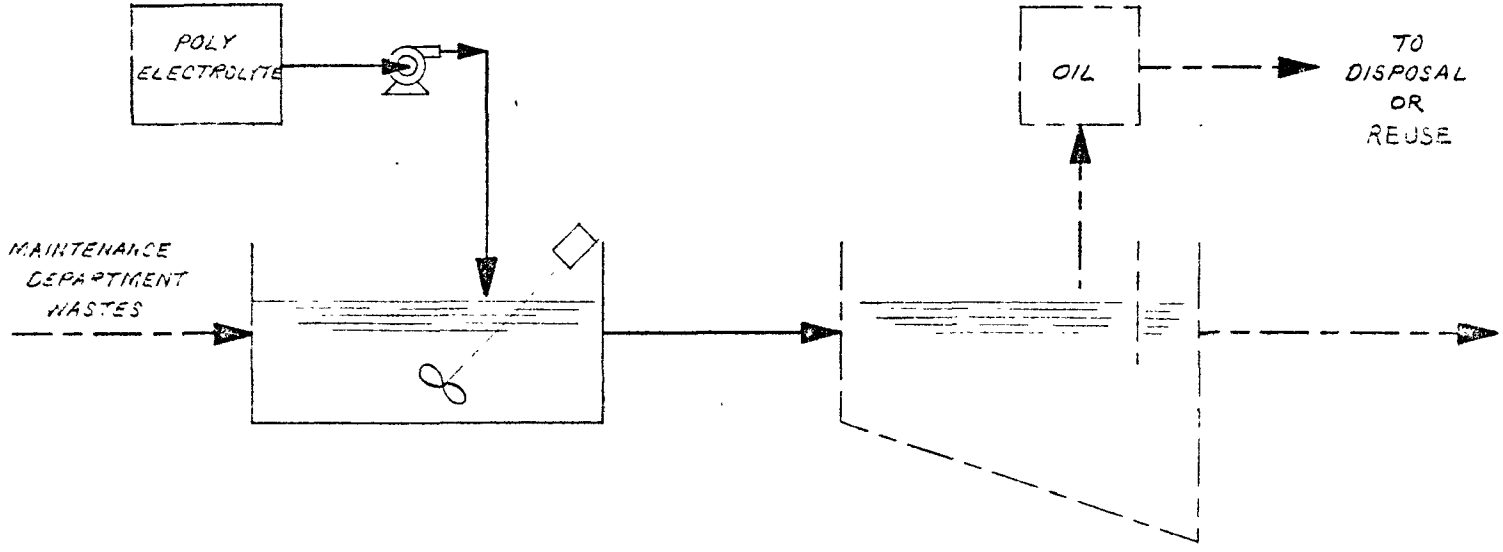

REFERENCE
LEVEL SYSTEM & BPCTCA MODEL

BATEA MODEL

ENVIRONMENTAL PROTECTION AGENCY
STEEL INDUSTRY STUDY
MAINTENANCE DEPARTMENT WASTES
SUBCATEGORY
BATEA MODEL

REV 12-20-74 6-5-75 | FIGURE 110

Cost to the Iron and Steel Industry

Table 108 presents a summary of projected capital and annual operating costs for the hot forming and cold finishing operations of the steel industry as a whole to achieve the effluent quality proposed herein for BPCTCA and BATEA for the steelmaking operations.

As presented in the table, an initial capital investment of approximately $791,082,247 million with annual capital and operating costs of $103,930,927 million would be required by the industry to achieve BPCTCA guidelines. An additional capital investment of approximately $589,941,780 million and a total annual capital amortization and operating cost of $222,980,909 million would be needed to achieve BATEA guidelines. Costs may vary depending upon such factors as location, availablility of land and chemicals, flow to be treated, treatment technology selected where competing alternatives exist, and the extent of preliminary modifications required to accept the necessary control and treatment devices.

TABLE 108

HOT FORMING - COLD FINISHING OPERATIONS
PROJECTED TOTAL COSTS FOR RELATED CATEGORIES AND SUBCATEGORIES

Subcategory	1972 Annual Production (millions of ton)	Number of Plants	COSTS TO INDUSTRY(1) BPCTCA Annual Capital and Operating Cost	BPCTCA Initial Capital Investment	BATEA Annual Capital and Operating Cost	BATEA Initial Capital Investment
Hot Forming						
Primary	80.0	65	8,933,470	36,792,730	16,090,620	26,828,165
Section	27.0	80	26,596,080	123,452,320	62,516,640	163,394,000
Flat - Strip & Sheet	55.0	45	40,897,530	174,964,905	94,894,875	236,210,895
Flat - Plate	8.0	15	5,453,355	25,289,085	14,785,125	42,995,940
Pipe and Tubes	6.2	50	5,049,250	21,707,800	10,768,350	25,548,300
Pickling						
Batch Sulfuric	7.8	120	12,992,880	25,003,680	29,688,840*	76,356,000
Hydrochloric - Regenerate	31.3	30	(25,470,630)	289,217,520	(22,735,740)	9,010,920
Hydrochloric - Neutralize	12.5	12	8,680,152	10,495,152	9,618,444	2,830,800
Cold Rolling						
Recirculation	10.4	10	613,570	2,675,880	-	-
Combination	16.4	35	9,788,345	36,925,455	-	-
Direct Application	3.9	15	4,387,905	16,248,525	-	-
Hot Coatings						
Galvanizing	5.5	30	5,184,120	24,339,840	6,336,750	5,800,080
Terne	0.9	5	824,900	3,969,355	1,017,005	966,680
TOTAL			103,930,927	791,082,247	222,980,909	589,941,780

(1) COSTS DETERMINED BY THE FOLLOWING RELATIONSHIPS:

(a) Annual Capital + Operating = Number of plants x Annual cost/facility
(b) Initial Capital Investment = Number of plants x First cost/facility

*Includes elimination of sludge disposal costs and chemical costs from BPCTCA category.

TABLE 109

NON-PROCESS OPERATIONS

PROJECTED TOTAL COSTS FOR RELATED CATEGORIES AND SUBCATEGORIES

Category	COSTS TO INDUSTRY(1) BPCTCA Annual Capital and Operating Cost	BPCTCA Initial Capital Investment	BATEA Annual Capital and Operating Cost	BATEA Initial Capital Investment
Miscellaneous Runoff	0	0	19,763,000	98,307,000
Utility Area Wastewaters	5,520,905	26,405,727	7,927,824	3,778,022
Noncontact Cooling Water Blowdown	10,715,204	48,234,864	17,981,327	33,066,436
Maintenance Department Wastewaters	3,641,800	13,100,000	5,790,200	6,550,000
TOTAL	19,877,909	87,740,591	51,462,351	141,701,458

(1) COSTS DETERMINED BY THE FOLLOWING RELATIONSHIP:

(a) Annual Capital + Operating = Number of plants x Annual cost/facility
(b) Initial Capital Investment = Number of plants x 1st cost/facility

TABLE 110

HOT FORMING - COLD FINISHING OPERATIONS
PROJECTED TOTAL COSTS FOR RELATED CATEGORIES AND SUBCATEGORIES

Subcategory	1972 Annual Production (millions of ton)	Number of Plants	COSTS TO INDUSTRY(1) BPCTCA Annual Capital and Operating Cost	BPCTCA Initial Capital Investment	BATEA Annual Capital and Operating Cost	BATEA Initial Capital Investment	Model Plant Size T/D	Model Plant Size D/Y
Hot Forming								
Primary	80.0	65	8,933,470	36,792,730	16,090,620	26,828,165	4000	312
Section	27.0	80	26,596,080	123,452,320	62,516,640	163,394,000	1300	260
Flat - Strip & Sheet	55.0	45	40,899,530	174,964,905	94,894,875	236,210,895	3800	312
Plate	8.0	15	5,453,355	25,289,085	14,785,125	42,995,940	2000	260
Pipe and Tubes	6.2	50	5,049,250	21,707,800	10,768,350	25,548,300	400	312
Pickling								
Batch Sulfuric	7.8	120	12,992,880	25,003,680	29,688,840**	76,356,000	250	260
Continuous Sulfuric	9.3	25	14,450,700	16,636,850	43,075,400**	213,750,000	1200	312
Hydrochloric-Regeneration	31.3	30	(25,470,630)	289,217,520	(22,735,740)	9,010,920	3000	348
Hydrochloric-Neutralization	12.5	12	8,680,152	10,495,152	9,618,444	2,830,800	3000	348
Cold Rolling								
Recirculation	10.4	10	613,570	2,675,880	-	-	3000	348
Combination	16.4	35	9,788,345	36,925,455	-	-	1500	312
Direct Application	3.9	15	4,387,905	16,248,525	-	-	1000	260
Hot Coatings								
Galvanizing	5.5	30	5,184,120	24,339,840	6,336,750	5,800,080	700	260
Terne	0.9	5	824,900	3,969,355	1,017,005	966,680	700	260
Cold Coatings-Tin	5.3	17	4,338,672	18,220,379	5,792,767	6,951,810	1200	260
Cold Coatings-Chrome	2.2	8	1,461,680	6,661,472	1,922,240	2,210,056	1200	230
TOTAL			124,181,979	832,600,948	273,771,316	812,853,646		

(1) COSTS DETERMINED BY THE FOLLOWING RELATIONSHIPS:

(a) Annual Capital + Operating = Number of plants x Annual cost/facility
(b) Initial Capital Investment = Number of plants x First cost/facility

*Includes costs for unregulated subcategories - continuous sulfuric and cold coatings.
**Includes elimination of sludge disposal costs and chemical costs from BPCTCA category.

SECTION XI

EFFLUENT QUALITY ATTAINABLE THROUGH THE APPLICATION OF NEW SOURCE PERFORMANCE STANDARDS

INTRODUCTION

The Best Available Demonstrated Control Technology (BADCT) is to be achieved by "New Sources." "New Sources" has been defined as any source the construction of which is commenced after the publication of the proposed regulations. The BADCT technology is that level which can be achieved by adding to the BATEA technology improved production processes and/or treatment techniques. For purposes of developing the BPCTCA and BATEA technologies and limitations, the industry was divided into the following subcategories:

M. Hot Forming Primary
N. Hot Forming Section
O. Hot Forming Flat
P. Pipe and Tubes
Q. Pickling - Sulfuric Acid - Batch
R. Pickling - Hydrochloric Acid
S. Cold Rolling
T. Hot Coating - Galvanizing
U. Hot Coating - Terne
V. Miscellaneous Runoffs
W. Cooling Water Blowdown
X. Utility Blowdown
Y. Maintenance Department Wastes

With the exception of the Hot Coating - Galvanizing and Terne subcategories and the absorber vent scrubber on the hydrochloric acid subcategory, there are plants in all other categories who are presently achieving the proposed BATEA effluent limitation guidelines. This in itself justifies the fact that technology is available and demonstrates that the limitations can be achieved on a day by day basis. Therefore, in those subcategories where an existing facility is currently achieving the BATEA guideline BADCT is the same as BATEA and the New Source Performance Standards are the same as for BATEA. In the subcategories except from this the flow basis corresponds with the BPCTCA technology but with extended settling to achieve the BATEA concentrations.

NSPS DISCHARGE STANDARD

For the following subcategories, refer to rationale as discussed in Section X - BATEA.

M. Hot Forming Primary
N. Hot Forming Section
O. Hot Forming Flat
P. Pipe and Tubes
Q. Pickling - Sulfuric Acid - Batch
R. Pickling - Hydrochloric Acid (if spent liquor is neutralized)
S. Cold Rolling
V. Miscellaneous Runoffs
W. Cooling Water Blowdown
X. Utility Blowdown
Y. Maintenance Department Wastes

For the remaining subcategories:

R. Pickling - Hydrochloric Acid
(B) Absorber Vent Scrubber

If acid regeneration is used the NSPS limitations are based on the BATEA treatment technology (and concentrations) and on the BPCTCA waste volume; i.e., recycle of the regeneration unit acid absorber vent scrubber water is not a basis for the NSPS limitation. Thus with acid regeneration, the NSPS limitations are based on a flow of 833 l/kkg (100 gal/1000 lbs) as in BPCTCA limitations. The recommended recycle of scrubber water is BATEA technology which has not been practiced as yet on an actual operating acid recovery unit although one surveyed plant is modifying their system to accomplish this. For this reason, the NSPS limitations were based on once-through discharge of the treated scrubber waters. For rinse water flows, and for fume hood scrubber flows, the NSPS limitations are the same as the BATEA limitations.

T. Hot Coating - Galvanizing
U. Hot Coating - Terne

New source performance standards (NSPS) for these subcategories use the same flow basis as the effluent limitations for BPCTCA. As yet, neither recommended BATEA flow reduction technique has been applied to full scale galvanizing operations, although they are used successfully in pickling operations and in gas scrubbing systems in iron and steel furnace operations. However, all parts of the end-of-process treatment technologies are currently in use at existing plants in this subcategory, therefore BATEA concentration limits were used to establish loads, even though BPCTCA flows had to be used.

SECTION XII

ACKNOWLEDGEMENTS

This report was prepared under Contract #68-01-1507 by the Cyrus Wm. Rice Division of NUS Corporation. The RICE operations are based in Pittsburgh, Pennsylvania.

The preparation and writing of this document was accomplished by Mr. Edward L. Dulaney, Project Officer, EPA, Mr. John G. Williams, Assistant Project Officer, EPA, and through the efforts of Mr. Thomas J. Centi, Project Manager Mr. Joseph A. Boros, and Mr. Wayne M. Neeley of C.W. Rice.

Field and sampling programs were conducted under the leadership of Mr. Donald J. Motz, Mr. Joseph A. Boros, and Mr. Richard C. Rice.

Laboratory and analytical services were conducted under the guidance of Mr. Paul Goldstein and Miss C. Ellen Gonter.

The many excellent drawings contained within were provided by the RICE drafting room under the supervision of Mr. Albert M. Finke.

The work associated with the calculations of raw waste loads, effluent loads, and costs associated with treatment levels is attributed to Mr. Gregory A. Troilo, Mr. Michael E. Hurst, and Mr. David A. Crosbie.

The support of the project by the Environmental Protection Agency and the excellent guidance provided by Mr. Walter J. Hunt, Chief, Effluent Guidelines Development Branch, and Mr. Edward L. Dulaney, the Project Officer, is acknowledged with grateful appreciation.

The members of the working group/steering committee who coodinated the internal EPA review are:

Walter J. Hunt - Effluent Guidelines Division
Edward L. Dulaney - Effluent Guidelines Division
(Project Officer)
John G. Williams - Effluent Guidelines Division
(Assistant Project Officer)
Hugh Durham - Office of Research and Development
Lee Evan Caplan - Office of General Counsel
James McDermott - Region V, EPA
Mat Miller - Region III, EPA

John Whitescarver - Office of Permit Programs
Dennis Ruddy - Office of Permit Programs
Robert Burm - Region VIII, EPA
Patricia Diercks - Effluent Guidelines Division
Al Brueckmann - Office of Planning and Evaluation
Steve Besse - Office of Planning and Evaluation

The excellent cooperation of the individual steel companies who offered their plants for survey and contributed pertinent data is gratefully appreciated. The operations and the plants visited were the property of the following companies: Armco Steel Corporation, Avco Thompson, Bethlehem Steel Corporation, Colorado Fuel & Iron, Copperweld Steel Corporation, Dominion Foundries and Steel Limited, Fitzsimmons Steel Company, Inland Steel Corporation, Interlake Steel Corporation, Jones & Laughlin Steel Corporation, Kaiser Steel Corporation, Lasalle Steel, Lone Star Steel Corporation, National Steel Corporation, Nelson Steel & Wire, Phoenix Manufacturing, Republic Steel Corporation, Sawhill Tubular, Sharon Tube Corporation, The Steel Company of Canada, Ltd., United States Steel Corporation, Walker Wire, Wheatland Tube Corporation, Wheeling-Pittsburgh Steel Corporation, Wire Sales, Inc., and Wisconsin Steel Corporation.

The assistance of steel industry consultants, namely Ferro-Tech Incorporated, was utilized in several areas of the project.

Acknowledgment and appreciation is also given to Ms. Kay Starr, Word Processing-Editor, to Ms. Nancy Zrubek and Ms. Alice Thompson of the Effluent Guidelines Development Branch secretarial staff, to Mrs. Minnie C. Herold, for library assistance and to Ms. Denise Devlin, Ms. Mary Lou Simpson, and Ms. Mary Lou Baronyak of the RICE Division for their efforts in typing of drafts, necessary revisions, and final preparation of the original RICE effluent guidelines, documents, and revisions.

SECTION XIII

REFERENCES

1. Aarons, Ralph and Taylor, Robert A., "The DuPont Waste Pickle Liquor Process", Proceedings of the 22nd Industrial Waste Conference, Purdue University, pp. 120-125 (1967).

2. Allen, Jones E., "Tin Line Conversion to Chrome", Iron and Steel Engineer, 47, pp. 88-92 (May, 1970).

3. Allison, R. J., et al, "Method for the Regeneration of Hydrochloric Acid from Spent Pickle Liquor and Like Solutions", United States Patent, 3,669,623, (June 13, 1972).

4. American Iron and Steel Institute, "Annual Statistical Report, 1971", Washington, D. C. (1972).

5. American Iron and Steel Institute, Directory of Iron and Steel Works of the United States and Canada, American Iron and Steel Institute, New York (1970).

6. American Iron and Steel Institute, "The Steel Industry Today", Submitted by Domestic Member Companies of American Iron and Steel Institute, pp. 1-38 (May, 1971).

7. Anderson, J. R., Luttinger, L. B., and Schwoger, W. L., "Gravity Dewatering of Metal Hydroxide Sludges", Plating, 59, pp. 1,135-1,139 (December, 1972).

8. Andon'ev, S. M., et al, "Increasing the Service Life of Emulsions on Cold-Rolling Mills", Steel in the USSR, 1, p. 966 (December, 1971).

9. Andrews, D. M., "Regeneration of HCl Waste Pickle Liquor at Stelco's Hilton Works", Iron and Steel Engineer, 48, pp. 53-55 (August, 1971).

10. "Annual Review Developments in the Iron and Steel Industry During 1972", Iron and Steel Engineer, 50, pp. D1-D48 (January, 1973).

11. "Annual Review Developments in the Iron and Steel Industry During 1971", Iron and Steel Engineer, 49, pp. D2-D52 (January, 1972).

12. Armco Steel Corporation, "Limestone Treatment of Rinse Waters from Hydrochloric Acid Pickling of Steel", Water

Quality Office, Environmental Protection Agency, Project No. 12010DUL3171 (February, 1971).

13. "Ashland Inaugurates HCl Acid Regeneration Plant", 33 Magazine, 10, pp. 30-32 (December, 1972).

14. Ashmore, A. G., Catchpole, J. R., and Cooper, R. L., "The Biological Treatment of Carbonization Effluents - I, Investigation into Treatment by the Activated Sludge Process", Water Research, 1, pp. 605-624 (1967).

15. Ashmore, A. G., Catchpole, J. R., and Cooper, R. L., "The Biological Treatment of Carbonization Effluents II, Studies of the Influent of Liquor Composition", 2, pp. 555-562 (1968).

16. "A Solution to Pollution 'Compound' the Problem", Mechanical Engineering, 94, p. 49 (October, 1972).

17. Association of Iron and Steel Engineers, "The Hot Strip Mill Generation II", AISE, (1970).

18. Balden, A. R. and Erickson, P. R., "Reuse, Not Just Treatment...", Water and Wastes Engineering, 8, No. 1, pp. A2-A4 (January, 1971).

19. Balzhi, N. M., et al, "Effect of Water Quality on the Service Properties of Emulsion", Steel in the USSR, 2, pp. 810-812 (October, 1972).

20. Barker, John E., Getter, Richard W., and Pettit, Grant A., "Armco's 100,000-GPM Mill-Scale Wastewater Treatment Plant", Water Pollution Control Federation, Journal, 41N.2 Pt. 1, pp. 301-307 (February, 1969).

21. Barker, John E., Foltz, Verlin W., and Thompson, Ronald J., "Treatment of Waste Oil: Wastewater Mixtures", Chemical Engineering Progress Symposium, Series N.107, 67, pp. 423-427 (1971).

22. Barker, John E. and Pettit, Grant A., "Water Reuse", Industrial Water Engineering, pp. 36-39 (January, 1968).

23. Barnes, F. W. and Denner, E. J., "Armco-Middletown's 86 In. Continuous Hot Strip Mill", Iron and Steel Engineer, 47, pp. 59-69 (January, 1970).

24. Battelle Memorial Institute, "A State of the Art Review of Metal Finishing Waste Treatment", Federal Water Quality

Administration U.S. Department of the Interior, Program No. 12010 EIE (November, 1968).

25. Baughman, G. M., "Preparation for a New Product: Tin-Free Steel", Iron and Steel Engineer, 19, pp. 91-101 (September, 1972).

26. Baughman, M. D., "High-Speed Continuous Galvanizing Lines", Iron and Steel Engineer, 47, pp. 134-141 (August, 1970).

27. Bayr, R. B., "Interlake's Water Pollution Program", Blast Furnace and Steel Plant, 57, pp. 370-373 (May, 1969).

28. Berkebile, David G., "Water Conservation by Reuse at Republic", Metal Progress, 98, No. 6, pp. 64-65 (December, 1970).

29. Berne, Francios, "Treatment of Industrial Effluents", Effluent and Water Treatment, Journal, 12, No. 4, pp. 2-5 Supplement C.

30. Bethlehem Steel, "Pollution Control: Bethlehem Meets the Challenge", Bethlehem Review, p. 9 (November, 1966).

31. Bethlehem Steel, "Pollution Control: Bethlehem Steps Up the Pace", Bethlehem Review, pp. 9-10 (February, 1969).

32. Beyer, Stanley, "Continuous Regeneration of Ferric Sulfate Pickling Bath", United States Patent, 3,622,478, (November 23, 1971).

33. Blackburn, T. L. and Dixon, Norman G., "Lone Star Steel's Cold-Drawn Tubing Facility", Iron and Steel Engineer, 48, pp. 37-47 (October, 1971).

34. Blanchard, Thomas A., "Incinerators for the Metal Working Industry", Metal Progress, 98, No. 6, pp. 57-58, (December, 1970).

35. Bland, Marshall, "Three Ways to Minimize Water Pollution in Cleaning, Finishing", Metal Progress, 98, No. 6, p. 60 (December, 1970).

36. Blatchley, Peter G., "Steel Plant 'Descales' Waste-water", Water and Wastes Engineering, 9, pp. F14-F16 (November, 1972).

37. Borgotte, Obering, "The Treatment of Hydrochloric Acid Rinsing Water and Concentrates in Wire Pickling Plants by

Ion Exchange in Conjunction with HCl Process for the Regeneration of Hydrochloric Acid Pickling Solutions", Wire World International, 11, pp. 57-60 (March/April, 1969).

38. Borgotte, Obering, "Methods of Pickling and Problems of Effluent Treatment in Industries Which Use Iron and Steel", Wire World International, 14, pp. 49-53 (March/ April, 1972).

39. Bowman, G. A., "Pressurized Deep Bed Filtration Systems for Hot Mill Scale Pit Water", Iron and Steel Engineer Yearbook, 1969, pp. 131-136 (1969).

40. Bramer, Henry C., "Progress Reports Closed Cycle Industrial Water Use System", Engineering Society of Western Pennsylvania Annual Water Conference, pp. 167-171 (1971).

41. Bramer, Henry C., "Pollution Control in the Steel Industry", Environmental Science and Technology, 5, pp. 1,0041,008 (1971).

42. Broman, C., "The Operation of Pressure Type Sand Filters for Hot Mill Wastewaters", Iron and Steel Institute, Chicago Regional Technical Meeting, pp. 143-147 (October 15, 1970).

43. Brown, Daniel L., "Recovery of Acid from Spent Pickle Liquor", Iron and Steel Engineer, 47, pp. 68-73 (September, 1970).

44. Burtch, Jack W., "PORl Hydrochloric Acid Regeneration Process", Iron and Steel Engineer, pp. 40-42 (April, 1973).

45. Catchpole, J. R. and Cooper, R. L, "The Biological Treatment of Carbonization Effluent III - New Advances in the Biochemical Oxidation of Liquid Wastes", Water Research, 6, pp. 1,459-1,474 (1972).

46. Chalkley, Brian, "A Major Step Towards Anti-Pollution Pretreatment", Industrial Finishing, 48, p. 40 (November, 1972).

47. Chalmers, R. K., "The Use of Water and the Treatment of Effluent in the Metal Finishing Industry", Chemistry and Industry, pp. 1,387-1,392 (October 31, 1970).

48. Channabosappa, K. C., "The Use of Reverse Osmosis for Valuable By-Product Recovery", Chemical Engineering Progress Symposium Series, Water, 67, No. 107, pp. 250-259 (1970).

49. "Clean Up at Armco and Jones and Laughlin Tagged 'Unique' and 'Biggest'", Iron Age, 210, p. 21 (November 30, 1972).

50. "Cold-Rolling at Burns Harbor", 33 Magazine, 9, pp. 22-25, (July, 1971).

51. Coleman, F. S., "Ohio Seamless Invests $232,000 in Pickle Liquor Treatment", Water and Wastes Engineering, pp. WWE/1 33-WWE/1 35 (May, 1968).

52. Conley, Ronald C., "Armco-Middletown's 86 In. Tandem Cold Mill", Iron and Steel Engineer, 49, pp. 63-66 (July, 1972).

53. "Control Pollution Without Capital Outlay", Iron Age, 209, pp. 48-50 (March 2, 1972).

54. "Costs Dive as Weirton Reuses Mill Roll Coolant", Steel, 162, N.24, pp. 78-80 (June 10, 1968).

55. Council on Environmental Quality, "A Study of the Economic Impact on the Steel Industry of the Costs of Meeting Federal Air and Water Pollution Abatement Requirements, Parts I, II, and III", Washington, D. C., (July 27, 1972).

56. Culotta, J. M. and Swanton, W. F., "Case Histories of Plating Waste Recovery Systems", Plating, 57, pp. 251-255 (March, 1970).

57. Culotta, J. M. and Swanton, W. F., "Control for Plating Waste Recovery System", Plating, 58, N.8, pp. 783-785 (August, 1971).

58. Culotta, J. M. and Swanton, W. F., "Recovery of Plating Wastes: Selection of Lowest Cost Evaporator", Plating, 57, pp. 1,221-1,223 (December, 1970).

59. Curran, J. and Machu, W., "Control of Pretreatment Pollution", Metal Finishing, 70, pp. 54-58 (October, 1972).

60. Davis, W. R., "Control of Stream Pollution at the Bethlehem Plant", Iron and Steel Engineer, pp. 135-140 (November, 1968).

61. Davisson, G. and Ullman, P., "Spent Pickling Liquors as Precipitating Agents for Sewage", Chemical Abstracts, 76, 10, p. 246 (1972).

62. Dean, John G., Bosqui, Frank L., and Lanouette, Kenneth H., "Removing Heavy Metals from Wastewater", Environmental Science and Technology, 6, pp. 518-522 (June, 1972).

63. "Deep Bed Filter Uses Polymer Resin Filter Material", Iron and Steel Engineer, 47, pp. 107-108 (October, 1970).

64. Delos, J. S., "Administration of a Water Pollution Control Program", Plating, 57, pp. 258-261 (March, 1970).

65. Dempster, J. H. and Gomoa, H. M., "Recycling of Waste Acid from Steel Pickling Operations", Water and Sewage Works, 120, pp. IW/26-IW/30, (March/ April, 1973).

66. "Developments in the Iron and Steel Industry During 1970", Iron and Steel Engineer, 48, pp. D1-D60 (January, 1971).

67. Directory of Iron and Steel Plants, Steel Publications, Inc., 1971.

68. Directory of the Iron and Steel Works of the World, Metal Bulletins Books, Ltd., London, 5th Edition.

69. Dodge, B. F. and Zabban, W., "Disposal of Plating Room Wastes III, Cyanide Wastes: Treatment with Hypochlorites and Removal of Cyanates", Plating, p. 561 (June, 1951).

70. "Dofasco's Mill Turns to High-Rate Filters", Water and Pollution Control, 110, p. 26 (May, 1972).

71. Domey, William R. and Stiefel, Robert C., "Wastewater Reduction in Metal Finishing Operations", Water Pollution Control Federation, Journal, 43, pp. 1,241-1,247 (December, 1971).

72. Donovan, E. J. Jr., "High-Rate Filtration of Industrial Wastes", in Water Quality Improvement by Physical and Chemical Processes, ed. Gloyna, E. F. and Eckenfelder, W. W. Jr., pp. 167-189, University of Texas Press, Austin and London (1970).

73. Donovan, E. J. Jr., "Treatment of Wastewater for Steel Cold Finishing Mills", Water and Wastes Engineering, pp. F22F25 (November, 1970).

74. Douglas, James, "80- In. HCl Pickling Line and Regeneration Plant at the Steel Company of Canada", Iron and Steel Yearbook, 1967, pp. 21-28 (1967).

75. "Effective Treatment Solves Liquor Problem", Public Works, 100, pp. 106-107 (June, 1969).

76. "Effluent Control in Wire Production", Wire Industry, 40, N.473, pp. 379-383 (May, 1973).

77. Eisenhuth, C. L., "The Pickling Process and Effluent Treatment in Wire Galvanizing", *%Proceedings 8th International Conference on Hot Dip Galvanizing, London, pp. 169-177 (June, 1967).

78. Elliot, A. C., "Regeneration of Steel Works Hydrochloric Acid Pickle Liquor", Effluent and Water Treatment Journal, 10, pp. 385-392 (July, 1970).

79. "Emissions Control System is Based on Impingement", Foundry, 101, N.9, pp. 108-110 (September, 1973).

80. Environmental Protection Agency, "Bibliography of Water Quality Research Reports", Water Pollution Control Research Series, Office of Research and Monitoring, Washington, D. C., pp. 1-40 (March, 1972).

81. Environmental Protection Agency, "Industry Profile Study on Blast Furnace and Basic Steel Products", C. W. Rice.

82. Environmental Protection Agency, "Water Pollution Control Practices in the Carbon and Allied Steel Industries", EPA, Washington, D. C. (September 1, 1972).

83. Environmental Steel, The Council on Economic Priorities.

84. "EPA vs Mills: Costs are in Eye of Beholder", Iron Age, 210, p. 43 (October 12, 1972).

85. Ess, T. J., "The 80 In. Hot Strip Mill at Great Lakes", Iron and Steel Engineer, 46, pp. 84-93 (April, 1969).

86. "The Fickle Future of Pickle Liquor", Iron Age, 210, p. 83, (October 19, 1972).

87. "Flying Start at Weirton No. 5", 33 Magazine, 9, pp. 44-51 (February, 1971).

88. Foltz, V. W. and Thompson, R. J., "Armco Developes Cold Mill Waste Oil Treatment Process", Water and Wastes Engineer Industrial, 7, pp. B16-B19 (March, 1970).

89. Foltz, V. W., "Development of Waste Oil Recovery Process at Armco Steel Corporation", Proceedings of the 25th (1970).

90. Frank, V. F. and Gravenstreter, James P., "Operating Experience with High-Rate Filters", Water Pollution Control Federation, Journal, 41, N.2 Pt. 1, pp. 292-296.

91. Galloway, R. E. and Colville, J. F., "Treatment of Spent Pickling Plant Liquors", Iron and Steel Institute, Report #128, pp. 103-110 (1970).

92. "Gary Works Latest Tinning Line Still a 'Thoroughbred' at Age Five", 33 Magazine, 10 N.6, pp. 52-54 (June, 1972).

93. Geny, P. and Dohen, E., "Measures Against Water Pollution in the Iron and Steel Industry", Pure and Applied Chemistry, L. Co land pCochran, Andrew) A., "Recovery of Metals from Electroplating Wastes by the Waste-Plus-Waste Method", Bureau of Mines Solid Waste Research Program, Technical Progress Report 27, (August, 1970).

95. Gillbanks, P. and Burden, E. B., "Treating Industrial Effluent", Metal Finishing Journal, 17 N.6, pp. 172-173 (June, 1971).

96. Golomb, A., "Application of Reverse Osmosis to Electroplating Waste Treatment", Plating, 57, pp. 1,001-1,005 (October, 1970).

97. Gomoa, H. M. and Dempster, J. H., "Disposal of Pickling Wastes - Is Recovery the Answer?", Wire and Wire Products, 46, pp. 53-55 (July, 1971).

98. Gravenstreter, James P., "Wastewater Treatment Facilities at Gary's 84 In. Hot Strip Mill", Iron and Steel Engineer Yearbook, 1969, pp. 301-307 (1969).

99. Handwerk, R. J., "Recycling Water Effectively", Foundry, 100, pp. 40-43 (July, 1972).

100. Hartman, C. D., "Use of Deep Well Method for Waste Disposal at Midwest", Blast Furnace and Steel Plant, pp. 911916 (October, 1967).

101. Hartman, C. D., Tucker, F. E., Simmons, P. D., and Toth, T. S., "Wastewater Control at Midwest Steel's New Finishing Mill", Iron and Steel Engineer Yearbook, 1963, pp. 734-746 (1963).

102. Haviland, Joseph M., "Effluent Treatment: Cutting Cost of Compliance", Products Finishing, 35, No.5, pp. 46-55 (February, 1971).

103. Hayney, Lloyd J., "A Case History Water Pollution Clean Up", Environmental Control Management, 137, pp. 52-54 (January, 1969).

104. Heaney, Donald F., "Deep-Bed Filter Systems for Mill pp. B6-B7 (March, 1970).

105. Heit, A. H., "Electrodialytic Recovery of Sulfuric Acid and the Iron Content Spent Pickling Process", Annual Water Conference Engineering Society of Western Pennsylvania, 30th, pp. 151-153 (1969).

106. Helwig, L. E., "Chromate Treatment of Galvanized Sheet", Metal Finishing, 68, pp. 54-59 (July, 1970).

107. "Highly Efficient Fume Control System Checks Pickling Exhaust Vapors At Republic", 33 Magazine, 10, pp. 50-51 (March, 1972).

108. Hoak, R. D. and Bramer, H. C., "Pollution Control in the Steel Industry", Chemical Engineering Progress, 62, pp. 48-52 (October, 1966).

109. Hogan, William T., "A Comprehensive Study of the United States Iron and Steel Industry - 1645-1971", 33 Magazine, 10, N.5, pp. 40-41 (May, 1972).

110. Holt, Sondra E., "Automatic Treatment of Plating Rinse Water at IBM", Industrial Finishing, 47, 12, pp. 43-55 (December, 1971).

111. Hughes, J., "Phosphate Waste Treatment", Metal Finishing, 69, p. 70 (September, 1971).

112. "Hydrochloric Acid Dominates Steel Pickling", Chemical and Engineering News, pp. 38-40 (March 3, 1969).

113. "Inland Steel's Newest Bar Mill is Rated as a Top Performer", 33 Magazine, 10, p. 36 (July, 1972).

114. "Interlake Converts Waste Pickle Liquor into Harmless Solids", Iron and Steel Engineer, 45, p. 150 (December, 1968).

115. Iron and Steel Engineer, "Annual Review of Developments In the Iron and Steel Industry During 1972" (January, 1973).

116. Iron and Steel Engineer Yearbook, 1970, "Developments in the Iron and Steel Industry During 1969", pp. 66-111 (1970).

117. Iron and Steel Engineer Yearbook, 1971, "Developments in the Iron and Steel Industry During 1970", pp. 19-75 (1971).

118. Jablin, Richard, "Environmental Control at Alan Wood: Technical Problems, Regulations and New Processes", AISI Yearbook, 1971, pp. 263-285 (1971).

119. Jenkins, S. H. "Measures Against Water Pollution in Industries Which Perform Metal Finishing", Pure and Applied Chemistry, 29, pp. 219-233.

120. Johnson, Kenn, "Effluent Control in Wire Production", Wire Industry, 40, N.473, pp. 387-391 (May, 1973).

121. Johnson, W. H., "Water Treatment and Reclamation", Iron and Steel Engineer Yearbook, 1963, pp. 410-415 (1963).

122. Jones and Laughlin, "Welcome to the Hennepin Works", Jones and Laughlin Steel.

123. Jukkola, W. H., "Flow Diagram for a New Steel Mill", Industrial Water Engineering, pp. 32-34 (September, 1967).

124. Kolesar, T. J., "Closed-Loop Recycling of Plating Wastes", Industrial Finishing, 48, N.9, pp. 22-25 (September, 1972).

125. Kotsch, J. A., "A Look at the Mini-Plants", Iron and Steel Engineer, 48, pp. 61-78 (August, 1971).

126. Kovacs, G. L., "Treatment of Waste HCl Pickle Liquor", United States Patent, 3,682,592, (August 8, 1972).

127. Krikau, F. G., "Hydrochloric Waste Pickle Liquor Disposal - A New Process", Iron and Steel Engineer, pp. 7174 (January, 1969).

128. Krikau, F. G., "Neutralization is Key to Acid -Liquid Waste Disposal", Chemical Engineering, pp. 124-125 (November 18, 1968).

129. Kushner, Joseph B., "Rinsing, Pollution, and Natural Recycling of Plating Baths", Metal Finishing, 69, pp. 36-39 (July, 1971).

130. Lacey, Robert E., "An Electromembrane Process for Regenerating Acid from Spent Pickle Liquor", Environmental Protection Agency Water Quality Office, Project No. 12010EQF (March, 1971).

131. Lackner, R. J., "Closed-Loop Pickling System", Wire Journal, 4, N.12, pp. 43-47 (December, 1971).

Sulfate from Waste Pickle Liquor", Metal Progress, 98, No.6, pp. 58-59 (December, 1970).

133. Lacy, W. J. and Cywin, A., "The Federal Water Pollution Control Administration Research and Development Program: Industrial Pollution Control", Plating, 55, pp. 1,299-1,301 (December, 1968).

134. Lancy, Leslie E., "Metal Finishing Waste Treatment Aims Accomplished by Process Changes", Chemical Engineering Progress Symposium Series, Water, pp. 439-441 (1970).

135. Lancy, Leslie E., "Phosphate Waste Treatment", Metal Finishing, p. 123 (May, 1971).

136. Lawes, B. C., Fournier, L. B., and Mathie, O. B., "A Peroxygen System for Destroying Cyanide in Zinc and Cadmium Electroplating Rinse Waters", Plating, 60, N.9, pp. 902-909 (September, 1973).

137. Lee, C. A., "Scale Pit Design", Iron and Steel Engineer, 47, pp. 117-119 (December, 1970).

138. Lee, Chesman A., "Simplify Terminal Treatment", Water and Wastes Engineering, 8, N.7, pp. D12-D13 (July, 1971).

139. Leidner, R. N., "Burns Harbor - Waste Treatment Planning for a New Mill", Blast Furnace and Steel Plant, pp. 316-321 (April, 1967).

140. Liesegang, Wilhelm, "Supervision and Control of Cooling Water for Hot Strip Mill Runout Tables", Iron and Steel Engineer, pp. 158-162 (April, 1966).

141. "Lorain has a New Look", 33 Magazine, pp. 80-89 (September, 1970).

142. Lowdre, L. R., "Fluoride Waste Puzzle Solved", Water and Wastes Engineering, 8, pp. B6-B9 (March, 1971).

143. Lowe, W., "A Review of Effluent Treatment Systems", Metal Finishing Journal, 15, N.171, pp. 103-105 (March, 1969).

144. McDonough, William P. and Steward, F. A., "The Use of the Integrated Waste Treatment Approach in the Large Electroplating Shop", Chemical Engineering Progress Symposium Series N.107, 67, pp. 428-431 (1971).

145. McGavin, R. F., "Suppression of Liquid Effluents from Plants Using Hot Sulphuric Acid Solutions to Descale Plain Carbon and Low-Alloy Steel Bars and Wire Coils", Iron and Industry, Special Report #128, pp. 112-119 (1970).

146. Marnell, Paul, "Spent HCl Pickling Liquor Regeneration in Fluid Bed", Chemical Engineering, 79, N.25, pp. 102-103 (November 13, 1972).

147. Maruszewski, J. A., Wilson, W. Jr., and Young, E. F. Jr., "Planning for Control of Stream Pollution at Jones and Laughlin's Hennepin Works", Iron and Steel Engineer, 45, pp. 71-88 (May, 1968).

148. McGibbon, V. R., "Industrial Waste Treatment by Pressure Filtration", Iron and Steel Engineer Yearbook, 1968, pp. 279282 (1968).

149. Melyer, S. F. and Taubken, T. L., "New Process Treated Acid Rinse Waters", Water and Wastes Engineering, 8, pp. F6-F8 (November, 1971).

150. Mihok, E. A., "Mine Water Research: Plant Design and Cost Estimates for Limestone Treatment", Washington, U. S. Department of Interior Bureau of Mines, Report of Investigation 7368, pp. 1-13 (1970).

151. Miller, J. H., "Closed-Cycle Systems as a Method of Water Pollution Control", Iron and Steel Engineer Yearbook, 1967, pp. 285-288 (1967).

152. "Mini-Mills, to Build or Not to Build", 33 Magazine, 11, pp. 31-35 (January, 1973).

153. "Mini-Plants in the U. S. - Roblin Steel's Two Join Forty-Two and the Number Still Grows", 33 Magazine, 9, pp. 56-59 (March, 1971).

154. Moore, John, "Wire Recycling: Cash is Better Than Trash", Wire and Wire Products, 47, N.12, pp. 62D-62G (December, 1972).

155. Morris, B. G. and Spaty, D. D., "Pollution Control of Plating Effluents", Product Finishing, 24, pp. 20-23 (December, 1971).

156. National Industrial Pollution Control Council, "The Steel Industry and Environmental Quality", U.S. Department of Commerce, pp. 1-26 (August, 1972).

157. Nebolsine, Ross and Pouschine, Ivan Jr., "Federal Water Pollution Control Bill and the Steel Industry", Iron and Steel Engineer, 48, pp. 89-91 (December, 1972).

158. Nebolsine, Ross, "Present Practice and New Concepts for Handling Effluents from Hot-Rolling Mills", Iron and Steel Engineer, 47, pp. 85-92 (August, 1970).

159. Nebolsine, Ross, "Steel Plant Wastewater Treatment and Reuse", Iron and Steel Engineer Yearbook, 1967, pp. 216-231.

160. "Nelson Steel and Wire Improves Pickling Reduces Costs With Acid Recovery System", Wire and Wire Products, 45, pp. 67-69 (September, 1970).

161. Nemeth, E. L. and Wexler, C. H., "Phoenix Steel's 160 In. Plate Mill", Iron and Steel Engineer, 47, pp. 33-40 (July, 1970).

162. "New Regeneration Processes Help Wire Mills Fight Pollution from Spent Pickling Liquor", Wire and Wire Products, 46, pp. 56-60 (July, 1971).

163. "1973, Another Banner Year for Steel", 33 Magazine, 10, pp. 42-45 (November, 1972).

164. "1972 Steel Industry Outlook", 33 Magazine, 9, pp. 52-56 (November, 1971).

165. "Nonstop Steelmaking: Norm for the 70's?", 33 Magazine, pp. 47-50 (August, 1970).

166. O'Bruzt, J. J., "Control Pollution without Capital Outlay", Iron Age, 209, pp. 48-50 (March 2, 1972).

167. O'Connor, S. F., Mountjoy, B. W. Jr. and Chamberlin, N. S., "Western Electric Builds Modern Plant for Treating Metal Finishing Wastes", 6, pp. D16-D19 (July, 1969).

168. "Ohio Steel Tube's Waste Pickle Liquor Treatment Plant On-Stream", Iron and Steel Engineer, 46, pp. 128-132 (June, 1969).

169. Osada, Ya. E., "Production of Plastic-Lined Steel Tubes", Steel in the USSR, 2, pp. 731-732 (September, 1972).

170. Ostrowski, E. J., "Recycling of Tin-Free Steel Cans, Tin Cans, and Scrap from Municipal Incinerator Residue", Iron and Steel Engineer, 48, pp. 65-74 (July, 1971).

171. Patterson, J. W. and Cheng, M. H., "Steel Industry", Water Pollution Control Federation, Journal, 44, pp. 1,093-1,095 (June, 1972).

172. Patterson, J. W. and Cheng, M. H., "Steel Industry pp. 1,184-1,188 (June, 1973).

173. Pettit, Grant A., "Waste Pickle Treatment by Armco Steel Corporation at Butler, Pennsylvania", Sewage and Industrial Wastes, 24, N.1, pp. 67-74 (January, 1952).

174. "Pickle Effluent Disposal", Chemical and Process Engineering, 51, pp. 77-78 (January, 1970).

175. "Pickle Liquor Waste Treatment by Continuous Ion Exchange", Federal Water Pollution Control Administration, Project No. WPRD 41-01-(RI)-68, September, 1969, 31 pages.

176. Pilot, J., "The Treatment of Industrial Effluent", Effluent and Water Treatment, Journal, 10, N.4, supplement, pp. 11-15 (April, 1970).

177. "Plating Waste Treatment at Proctor-Silex", Products Finishing, 35, N.4, pp. 43-49 (January, 1971).

178. Plumer, L., "Operation and Cost of an Ion Exchange Circulation Plant for the Treatment of Rinsing Water from Pickling Departments in Rolling Mills", Wire World International, 10, N.4, pp. 110-113 (July/August, 1968).

179. "Pollution Control: Rinse Out a Profit", Iron Age, pp. 48-49 (February 17, 1972).

180. "Profitable Pollution Control", Automation, 16, pp. 1718 (December, 1969).

181. Republic, "Republic Unveils 84 In. Hot Strip Mill At Cleveland", Iron and Steel Engineer, 48, pp. 83-84 (May, 1971).

182. "Rochester Starts Up Its New Wire Drawing Mill", Wire and Wire Products, 46, P. 72 (December, 1971).

183. Saros, S., "Seventy-Two Inch Continuous Galvanizing Line At Inland Steel", Blast Furnace and Steel Plant, 58, pp. 648-652 (September, 1970).

184. Schaffer, Robert B., "Polyelectrolytes in Industrial Waste Treatment", Industrial Water and Wastes, pp. 33-39 (November/December, 1963).

185. Schink, C. A., "Plating Wastes - A Simplified Approach to Treatment", Plating, 55, N.12, pp. 1,302-1,305 (December, 1968).

186. Schreur, N., "The Lancy Integrated System for Treatment of Cyanide and Chromium Wastes in Electroplating Plants", Proceeding of the Industrial Waste Conference, 22nd, Purdue University, pp. 310-316 (1967).

187. Schuetz, James W., "Recent Developments in Seamless Tube Mill Technology", 33 Magazine, 10, pp. 46-49 (March, 1972).

188. Smith, R. D., "Burying Your Pickle Liquor Disposal Problem", Civil Engineering, 39, pp. 37-38 (November, 1969).

189. Smith, R. D., "Steel Company Builds Flexible Wastewater Treatment System", Water and Wastes Engineering/Industrial (March, 1969).

190. Smith, Stuart E., "Plating and Cyanide Wastes", Water (June, 1972).

191. Smithson, G. R. Jr., "An Investigation of Techniques for Removal of Chromium from Electroplating Wastes", Battelle Memorial Institute, Program #12010 EIE (March, 1971).

192. Snowden, F. C., "Metal Finishing Wastes Can Become Potable Effluents", Water and Sewage Works, 116, pp. IW9IW11 (May, 1969).

193. "Solid and Liquid Wastes Incinerator Systems", Iron and Steel Engineer, 47, pp. 116-117 (November, 1970).

194. "Some New Developments in Rolling Mills", 33 Magazine, 10, pp. 41-45 (March, 1972).

195. Spatz, D. D., "Electroplating Wastewater Processing with Reverse Osmosis", Products Finishing, 36, N.11, pp. 79-83 (August, 1972).

196. Spencer, Leonard C., "Practical Approach to Scale Pit Pumping", Iron and Steel Engineer, 50, pp. 68-74 (May, 1973).

197. "Steelmen and Scientists Join Forces in the Pollution Control Effort", 33 Magazine, 10, pp. 33-35 (February, 1972).

198. Stoner, L. B., "Waste Treatment Facilities for Jones and Laughlin Steel Corporation Hennepin Works", Proceedings of the 26th Industrial Waste Conference, Purdue University, (1971).

199. Stove, Ralph and Schmidt, Carter, "A Survey of Industrial Waste Treatment Costs and Charges", Proceedings of the 23rd Industrial Waste Conference, Purdue University, pp. 49-63 (1968).

200. "Subsurface Disposal of Pickle Liquor", U.S. Department of the Interior.

201. Symons, C. R., "Treatment of Cold Mill Wastewater by Ultra-High-Rate Filtration", Water Pollution Control Federation, Journal, 43, pp. 2,280-2,286 (November, 1971).

202. Talbott, John A., "Building A Pollution Free Steel Plant", Mechanical Engineering, 93, pp. 25-30 (January, 1971).

203. "Technology the Key to Pollution Control", Metal Progress, 98, N.6, pp. 54-57 (December, 1970).

204. Temmel, F. M., "Treatment of Acid and Metal-Bearing Wastewaters by the High-Density Sludge Process", San Francisco Regional Technical Meeting, American Iron and Steel Institute, pp. 343-357 (November 18, 1971).

205. Thompson, J. and Miller, V. J., "Role of Ion Exchange in Treatment of Metal Finishing Wastes", Plating, 58, pp. 809812 (August, 1971).

206. Thompson, Ronald J., "Water Pollution Control Program at Armco's Middletown Works", Iron and Steel Engineer, 49, pp. 43-48 (August, 1972).

207. Tihansky, D. P., "A Cost Analysis of Waste Management Association, 22, N.5, pp. 335-341 (May, 1972).

208. "Today's Pollution Control Practices in the American Steel Industry", 33 Magazine, 10, N.1, pp. 33-36 (January, 1972).

209. Toureene, Kendall W., "Wastewater Neutralization", Iron and Steel Institute, Chicago Regional Technical Meeting, pp. 99-117 (October 15, 1970).

210. "The Making, Shaping, and Treating of Steel", United States Steel Corporation, Pittsburgh, Pennsylvania, 9th Edition, 1971, 1,420 pages.

211. "Treatment of Wastewater-Waste Oil Mixtures", Federal Water Pollution Control Administration, Water Pollution Control Research Series, Program 12010 EZU, May, 1970, 137 pages.

212. "Up-Flow Filters Help Chicago Area Mine Mill Clean Its Cooling Water", 33 Magazine, 10, N.6, pp. 50-51 (June, 1972).

213. U. S. Department of Commerce, Bureau of the Census, Census of Manufacturers, 1967, Washington, D. C.

214. Water and Sewage Works, 113, "Bethlehem Steel's Burns Harbor Wastewater Treatment Plant", pp. 468-470 (December, 1966).

215. U. S. Steel's Fairless Works, "Modifications to Fairless Pickle Line Improves Strip Quality", Iron and Steel Engineer, 48, p. 87 (November, 1971).

216. "U. S. Steel's 'Texas Works' Built With Ecology in Mind", Water and Sewage Works, 118, p. 241 (August, 1971).

217. Vorga, J. and Lownie, H. W., "A System Analysis Study of the Integrated Iron and Steel Industry", Battelle Memorial Institute (May 15, 1969).

218. Vasil'ev, V. I., et al, "Selection of Types of Equipment for the Clarification of Neutralized Iron - Containing Acidic Wastewaters", Chemical Abstracts, 77, 4, pp. 349 (1972).

219. Vivian, Gordon, "Disposal of Cyanide Heat Treating Wastes", Metal Progress, 98, N.6, p. 61 (December, 1970).

220. Walton, G. L., "Effluent Treatment in Steel Works", Metal Finishing Journal, 18, pp. 276-279 (September, 1972).

221. "Water Pollutant or Reusable Resource?", Environmental Science and Technology, 4, N.5, pp. 380-382 (May, 1970).

222. "Water Use in Manufacturing", 1967 Census of Manufactures, U. S. Department of Commerce, Bureau of the Census, MP67 (1)-7, April, 1971, 361 pages.

223. "Watkins Cyclopedia of the Steel Industry", Steel Publications, Inc., Pittsburgh, Pennsylvania, 13th Edition, 1971, 533 pages.

224. Weinberg, H. I., "Inland Steel's New 80 In. Pickle Line", Iron and Steel Engineer, 49, pp. 70-76 (January, 1972).

225. Welded Steel Tube Institute, Member Companies, p. 2 (1967).

226. Weymier, R. C., "Operation of Wastewater System at Inland's 80 In. Hot Strip Mill", Iron and Steel Engineer Yearbook, 1968, pp. 183-191 (1968).

227. "When it Comes to Pollution Control, Steel Isn't Dawdling - It's Acting", 33 Magazine, 10, pp. 23-29 (January, 1972).

228. Whither Goest Thou, U. S. Steel Industry?", 33 Magazine, 9, pp. 36-55 (April, 1971).

229. "Whither Goest Thou, U. S. Steel Industry?", 33 Magazine, 9, pp. 50-55 (May, 1971).

230. "Whither Goest Thou, U. S. Steel Industry?", 33 Magazine, 9, pp. 38-43 (June, 1971).

231. "Who's on First In Wide Hot Strip Mills", 33 Magazine, 8, pp. 88-101 (March, 1970).

232. Wiedemann, Chester R., "Control Considerations in Washing, Painting, and Soluble Oil Removal", Metal Progress, 98, N.6, pp. 66-67 (December, 1970).

233. Wiedmann, H., "Regeneration of Pickling Hydrochloric Acid by Liquid Anion Exchange", Chemical Abstracts, 76, p. 306 (1972).

234. Wight, Robert D., "Water System for an Integrated Steel Plant", American Water Works Association Journal, 61, pp. 432-435 (1969).

235. Wilthew, Robert M. and Davidson, Robert M., "Youngstown's 84 In. Hot Strip Mill", Iron and Steel Engineer, 49, pp. 5363 (May, 1972).

236. Wittman, I. E. and Shephard, G. S., "Integrated Steel Pickling Rinse Water Treatment System", Iron and Steel Engineer, 49, pp. 69-71 (February, 1972).

237. "World's First Continuous Cold Mill Ready to Roll", 33 Magazine, 9, pp. 30-33 (April, 1971).

238. Wykoff, Richard H., "Major Filtration Development at New Steel Mill", Water and Sewage Works, 117, pp. IW8-IW10 (July/August, 1970).

239. Yunghahn, R. J., "Profitable Pollution Control", Modern Metals, 26, p. 62 (July, 1970).

240. Zievers, J. F. and Novotry, "Recovery of Mixed Rinse Water by Means of Ion Exchange", Plating, 58, N.5, pp. 482-485 (May, 1971).

241. Zievers, J. F., "Pressure Filtration of Clarifier Under-Flow", Chemical Engineering Progress, 67, N.12, pp. 47-48 (December, 1971).

242. Zievers, J. F., Crain, R. W., and Barclay, F. G., "Metal Finishing Wastes: Methods of Disposal", Plating, 57, pp. 56-59 (January, 1970).

243. Zievers, J. F., Crain, R. W., and Barclay, F. G., "Waste Treatment in Metal Finishing: U. S. and European Practices", Plating, 55, pp. 1,171-1,179 (November, 1968).

SECTION XIV

GLOSSARY

Annealing. A process for producing certain physical properties in steel. The process consists of raising the temperature of the steel to a pre-established level and then slowly cooling the steel at a prescribed rate.

Alkaline Chlorination. The oxidation of undesirable substances with chlorine under alkaline conditions.

Alkaline Cleaning. A process for cleaning steel where mineral and animal fats and oils must be removed from the surface. Solutions at high temperatures containing caustic soda, soda ash, alkaline silicates, and alkaline phosphates are commonly used.

Bar. A long, thin, relatively stiff steel shape. Bar is produced by rolling from billets. It can be round, square, hexagonal, or rectangular in shape. It is generally handled straight in cut lengths of 20 or more feet long as contrasted by rod (which may be larger in diameter than some bars) which is coiled in lengths of several hundred feet.

Billets. A bar shaped intermediate steel product which is rolled from a bloom. While billets are usually smaller than blooms, all billets are not necessarily smaller than all blooms. Blooms are rolled from ingots, while billets are rolled from blooms.

Billet Mill. The area and mechanical equipment for hot rolling blooms to billets.

Black Plate. A steel generally used in the manufacture of containers. It is similar to tin-plate except that it is not coated with tin or any other metal.

Bloom. A semi-finished piece of steel, which has a cross-sectional area that is square or slightly oblong and not less than 36 sq. in., that has been rolled or forged from an ingot.

Blooming Mill. The area and mechanical equipment for hot rolling steel ingots to blooms.

Blowdown. A relatively small bleed-off discharge, continuous or periodic, from a recirculated closed system.

Carbon Steel. Steel which owes its properties chiefly to various percentages of carbon without substantial amounts of other alloying elements.

Clarification. The process of removing undissolved materials from a liquid by settling or filtration.

Coagulant. A substance that enhances the aggregation of undissolved suspended matter.

Cold Rolling. Cold rolling is a form of cold working which is the general term for reducing the size (or thickness) of an ambient temperature piece of steel. Cold working causes significant changes in the physical properties of steel.

Cooling Bed. The area in a process line where product speed and temperature are controlled to provide a required cooling rate.

Descaling. The removal, through the use of high pressure water sprays, of the iron oxide scale formed on the steel product during hot forming processes.

Electrolytic Pickling. Removal of surface scale and rust from steel by an induced current in an acidic bath.

Evaporation Chamber. A method used for cooling gases to the precipitators in which an exact heat balance is maintained between water required and gas cooling; no effluent is discharged in this case as all of the water is evaporated.

Finishing Mill Stand. The mill stand in a process line where the product is rolled into its final shape.

Flocculation. The aggregation of undissolved suspended matter into larger conglomerates.

Flying Shear. A shear that moves with the product while operating.

Fume. A collection of micron or submicron size dust particles.

Horizontal Stand. A mill stand having the work rolls in a horizontal position which is parallel to the mill table.

Hot Forming. The processes by which hot steel ingots are converted by rolling under pressure of steel rolls to slabs and blooms. The processes by which slabs, blooms, and castings are further shaped through rolling, forging, or

extruding into various finished or semi-finished products such as plates, strips, pipes, bars, structural shapes, billets, and special shapes.

Hot Rolling. A form of hot working of steel where the steel is heated to about 1,800°F and passed through a rolling mill.

Hot Saw. A circular saw used for cutting semi-finished steel pieces at elevated temperatures.

Hot Scarfing Machine. A machine which utilizes oxyacetylene burner nozzles for removing surface defects from blooms or billets by desurfacing.

Ingot. A large block shaped steel casting. Ingots are intermediates from which other steel products are made. An ingot is usually the first solid form the steel takes after it is made in a furnace.

Inhibitor. Any substance added to a solution that lessens acid attack on the steel itself, while permitting preferential attack on the iron oxides.

Iron. The product made by the reduction of iron ore. Iron in the steel mill sense is impure and contains up to 4% dissolved carbon along with other impurities.

Iron Ore. The raw material from which iron is made. It is primarily iron oxide with impurities such as silica.

Iron Oxide. Compounds containing metallic iron and oxygen in various proportions including ferrous oxide (FeO), ferric oxide (Fe_2O_3) and magnetite (Fe_3O_4).

Manipulator. A steel fingered device that seizes the bloom and turns it so that all four sides will be kneaded evenly.

Mill Scale. The iron oxide scale which breaks off of heated steel as it passes through a rolling mill. The outside of the piece of steel is generally completely coated with scale as a result of being heated in an oxidizing atmosphere.

Mill Stand. The portion of the mill equipment that houses the work rolls.

Mill Table. The portion of the mill equipment composed of a framework and small rollers used to convey product to, from, or between work areas of a mill.

Normalizing. Heating of the sheet to its upper critical temperature and then cooling at a rate which permits the proper ferrite grain size.

Oil Quenching. A method of cooling which changes the chemical properties and structure of steel.

Pass. The movement of product once through a mill.

Pickling. A process where scale is removed from the surface of steel by the action of strong mineral acids. Steel is usually pickled between the hot working and cold working phases of the operation.

Piercing. The operation of making the hole down through a length of seamless pipe.

Plate. A product rolled from a slab. Plate is more nearly square than a slab which is generally much longer than it is wide. Plate is generally made by rolling slabs both crosswise and lengthwise to obtain greater width.

Polyelectrolyte. A substance that enhances the flocculation mechanism.

Quenching. A process of rapid cooling from an elevated temperature by contact with liquids, gases, or solids.

Reversing Mill. A type of rolling mill that passes product back and forth through the rolls or initiates rolling from either side of the rolls.

Rinse Water. Water that is used for removing a concentrated solution from a material prior to further processing.

Rod. A long, slender, generally round steel intermediate product produced by hot rolling. It is generally handled in coils of a hundred feet or more in length.

Rolling Mill. The machinery and equipment that is used to change the shape and chemical structure of steel by passing the steel between rollers under pressure.

Roughing Mill Stand. The first mill stand in a process line where the product receives its first reduction.

Scale. The by-product of hot rolling operations composed primarily of various iron oxides.

Scarfing. The operation of removing surface defects from blooms, billets, or slabs (primary rolled products) before reheating for secondary reduction. This is done with a high temperature torch similar to an oxyacetylene cutting torch.

Sheet. A product made by cutting strip into shorter lengths. Sheet is handled as a pile of flat pieces.

Skelp. A narrow strip of hot rolled steel generally used in the manufacture of pipe.

Skin Rolling. A cold rolling operation that effects a relatively light reduction in thickness of the rolled material.

Slab. A thick, heavy, slab shaped piece of steel rolled from an ingot. It is the primary intermediate product from which strip, sheet, plate, etc., are made. Slabs bear the same relationship to the above products as blooms do to billets. A typical slab is 8 in. thick by 48 in. wide by 20 ft long.

Slag. The mixture of the oxides formed during the oxidation of various compounds in the steelmaking and finishing processes.

Soaking Pit. A form of reheat furnace. Soaking pits are used to heat and equalize the temperature of ingots prior to putting them into a rolling mill.

Spent Pickle Liquor. The pickling solution that has progressively become saturated with ferrous salts and the bath has become ineffective in removing scale.

Steel. Any alloy of iron containing less than 1% carbon. Iron that has been refined.

Strip. A long, thin, flat, wide piece of steel produced by hot rolling of a slab. Strip is handled in coil form.

Sump. Storage area, normally located below ground level, used for collecting liquids or solids.

Tandem Mill. A rolling mill with more than one stand where the steel passes through the stands in sequence with each stand taking a reduction over that taken by the previous stand.

Temper Mill. A cold rolling mill that takes a very small reduction on the cold steel to alter its physical properties by cold working.

Terne Metal. An alloy of lead and tin.

Universal Mill. A reversing mill, which has vertical and horizontal rolls, used for hot rolling steel.

Vertical Stand. A mill stand having the work rolls in a vertical position which is perpendicular to the mill tables.

Walking Beam Furnace. A furnace that conveys the product in a step type motion.

Wetting Agent. An organic compound which lowers the interfacial tension between the steel and the liquid.

TABLE 111

METRIC UNITS
CONVERSION TABLE

MULTIPLY (ENGLISH UNITS)			TO OBTAIN (METRIC UNITS)	
ENGLISH UNIT	ABBREVIATION	CONVERSION	ABBREVIATION	METRIC UNIT
acre	ac	0.405	ha	hectares
acre-feet	ac ft	1233.5	cu m	cubic meters
British Thermal Unit	BTU	0.252	kg cal	kilogram - calories
British Thermal Unit/ cubic foot	BTU/cu	9.00	kg cal/ cu in	kilogram calorie/ cubic meter
British Thermal Unit/pound	BTU/lb	0.555	kg cal/kg	kilogram calories/kilogram
cubic feet/minute	cfm	0.028	cu m/min	cubic meters/minute
cubic feet/second	cfs	1.7	cu m/min	cubic meters/minute
cubic feet	cu ft	0.028	cu m	cubic meters
cubic feet	cu ft	28.32	l	liters
cubic inches	cu in	16.39	cu cm	cubic centimeters
degree Fahrenheit	°F	0.555(°F-32)*	°C	degree Centigrade
feet	ft	0.3048	m	meters
gallon	gal	3.785	l	liters
gallon/minute	gpm	0.0631	l/sec	liters/second
gallon/ton	gal/t	4.17	l/kkg	liter/metric ton
horsepower	hp	0.7457	kw	kilowatts
inches	in	2.54	cm	centimeters
inches of mercury	in Hg	0.03342	atm	atmospheres
million gallons/day	mgd	3,785	cu m/day	cubic meters/day
mile	mi	1.609	km	kilometer
pounds	lb	0.454	kg	kilograms
pound/square inch(gauge)	psig	(0.06085 psig+1)*	atm	atmospheres(absolute)
pounds/ton	lb/t	0.501	kg/kkg	kilograms/metric ton
square feet	sq ft	0.0929	sq m	square meters
square inches	sq in	6.452	sq cm	square centimeters
tons(short)	t	0.907	kkg	metric tons(1000 kilograms)
yard	y	0.9144	m	meters

*Actual conversion, not a multiplier

TABLE 112

CLASSIFICATION BY SUBCATEGORY

Product or Operation	Description	Applicable Subcategory
Abrasive Cleaning	Removal of oxides via treatment with abrasives	No regulation required, single operation generates no wastewaters
Armor Plate	Steels of special metallurgical composition for use as armor	Hot Forming-Flat-Plate
Axles	Rolled, forged, and/or roughturned, usually in one heating	Hot Forming-Section
Billets	Intermediate shape between blooms and a wide variety of other finished and semi-finished products	Hot Forming-Section
Billet Casting	Continuous conversion of molten steel directly into billets	Continuous Casting
Black Plate	Uncoated, cold rolled coils or sheets, usually temper rolled also	Cold Rolling-Direct Application; Combination; or Recirculation
Bloom Casting	Continuous conversion of molten steel directly into blooms	Continuous Casting
Channels	See Structural Shapes	--
Direct Reduction	Iron making via an alternate technique which replaces blast furnace operations	No present regulation
Fence Posts	See Structural Shapes	--
Forgings	Hot working of metal by hammering or pressing	Hot Forming-Primary
Frogs	Crossover sections allowing rails to intersect each other	Hot Forming-Section

Product or Operation	Description	Applicable Subcategory
Gun Forgings	See Forgings	--
Hoops	Narrow flat rolled product joined to form a continuous loop	Hot Forming-Flat-Hot Strip & Sheet
Iron from Direct Reduction Units	Iron making via an alternate technique which differs from conventional blast furnaces	No present regulation
I-Beams	See Structural Shapes	--
Nails & Staples	Fasteners made from wire or small rods, sometimes coated before shipment	Forming is a Dry Operation; for Coating - See Hot or Cold Coating subcategories
Nut Rods	Hot rolled shapes from which nuts and bolts are formed	Hot Forming-Section
Pilings	See Sheet Pilings	--
Rails & Rail Joints	Hot rolled shapes used for laying tracks of various types	Hot Forming-Section
Rings	Hot rolled product cut from an ingot or round, center punched out, and rolled into a continuous ring	Hot Forming-Section
Rounds	Billets of circular cross-section, used in forming seamless pipe and tube, some axles and bars, and some forged products	Hot Forming-Section
Sheet Pilings	A special structural shape hot rolled from blooms into a variety of configurations	Hot Forming-Section
Slab Casting	Continuous conversion of molten steel directly into slabs	Continuous Casting
Spiegeleisen	A ferroalloy containing 16-28% Mn, and less than 6.5% carbon	Blast Furnace-Ferromanganese

Product or Operation	Description	Applicable Subcategory
Spikes & Chains	Hot formed shapes made from rods or small bars in a variety of sizes	Hot Forming-Section
Structural Shapes	Standard hot rolled sections, such as I-Beams, channels, angles, beams, tees, and zees	Hot Forming-Section
Tie Plates	Hot rolled shapes used for connecting other sections	Hot Forming-Section
Well Casings & Couplings	Special strength pipe and tube products for oil, gas and water wells	Pipe & Tube
Wheels, Forged	See Forgings	--
Wheels, Forged and Rolled	Forged wheel blanks further processed by hot rolling to produce a flange and tread	Hot Forming-Section
Wire & Wire Products	Products made by drawing rods through a series of dies to greatly reduce diameters. Product may be pickled and/or coated prior to shipment.	Drawing is a Dry Operation; For other wire-making processes, see Pickling, Hot Coating or Cold Coating Subcategories