EPA-460/3-74-014

A STUDY OF EMISSIONS FROM 1967-1974 LIGHT-DUTY VEHICLES IN NEWARK, NEW JERSEY

Prepared by

A.R. Martin, D.T. Feal, and L. M. Anstey

General Environments Corp.
6840 Industrial Road
Springfield, Virginia 22151

Contract No. 68-03-0389

EPA Project Officer: John T. White III

Prepared for

U.S. ENVIRONMENTAL PROTECTION AGENCY
Office of Air and Waste Management
Office of Mobile Source Air Pollution Control
Certification and Surveillance Division
Ann Arbor, Michigan 48105

October 1974

This report is issued by the Environmental Protection Agency to report technical data of interest to a limited number of readers. Copies are available free of charge to Federal employees, current contractors and grantees, and nonprofit organizations - as supplies permit - from the Air Pollution Technical Information Center, Environmental Protection Agency, Research Triangle Park, North Carolina 27711; or, for a fee, from the National Technical Information Service, 5285 Port Royal Road, Springfield, Virginia 22151.

This report was furnished to the Environmental Protection Agency by General Environments Corp., Springfield, Virginia, in fulfillment of Contract No. 68-03-0389. The contents of this report are reproduced herein as received from General Environments Corp. The opinions, findings, and conclusions expressed are those of the author and not necessarily those of the Environmental Protection Agency. Mention of company or product names is not to be considered as an endorsement by the Environmental Protection Agency.

Publication No. EPA-460/3-74-014

ABSTRACT

General Environments Corporation under contract to the Environmental Protection Agency, conducted a comprehensive study of automotive exhaust emissions on 180, light-duty vehicles in the metropolitan area of Newark, New Jersey. This study of 1967 through 1974 model-year consumer-owned vehicles was part of a total surveillance program conducted in six major cities (Denver, Detroit, Houston, Los Angeles, Newark and St. Louis) in order to determine the impact of automotive emissions on air quality.

Specifically, vehicles in Newark were tested for exhaust emissions using the 1975 Federal Test Procedure including the hot-stabilized cycle. During this basic test an additional analysis was made to determine the light hydrocarbons and aldehydes of the 180 vehicles. Modal emissions were determined on 75 vehicles, and the EPA Highway Fuel Economy Test was conducted on all vehicles. Over 50% of the sample subsequently underwent idle emission tests conducted through the State of New Jersey Vehicle Inspection Program. A history of this data was compiled for the purpose of correlating the laboratory tests with the New Jersey idle tests.

TABLE OF CONTENTS

	Page
1. Introduction	1
2. Technical Discussion	3
2.1 Program Objectives	3
2.2 Program Design	3
2.3 Test Vehicle Procurement	4
2.3.1 Test Vehicle Selection	6
2.3.2 Incentives	12
2.3.3 Test Vehicle Handling	14
2.4 Facilities and Equipment	16
2.4.1 Test Location	16
2.4.2 Constant-Volume Sampler	18
2.4.3 Emission-Analysis Console	18
2.4.4 Laboratory Standard Calibration Gases	18
2.4.5 Chassis Dynamometer	19
2.4.6 Equipment for Aldehyde and Light Hydrocarbon Measurement	19
2.4.7 Miscellaneous Equipment	21
2.5 Equipment Qualification, Calibration and Cross-Check	22
2.5.1 Constant-Volume Sampler	22
2.5.2 Emission-Analysis Console	24
2.5.3 Chassis Dynamometer	26
2.5.4 Evaporative Emissions Equipment	27
2.5.5 Equipment for Special Additional Tests	27
2.6 Test Procedures	30
2.6.1 Vehicle Preparation	30
2.6.2 Equipment Preparation	31
2.6.3 Federal Exhaust Emission Test Procedure	32
2.6.4 Modal Exhaust Emission Test Procedure	34
2.6.5 Aldehydes and Light Hydrocarbon Measurements	37
2.6.6 Daily Test Schedule	38

TABLE OF CONTENTS (CONT'D)

	Page
2.7 Data Handling	41
2.7.1 Data Collection	41
2.7.2 Data Processing	41
2.7.3 Calculation of Results	45
2.7.3.1 Exhaust Emissions	45
2.7.3.2 Modal Emissions	48
2.7.3.3 Fuel Economy	49
2.7.3.4 Aldehyde and Light Hydrocarbon Emissions	50
3. Test Results	52
3.1 Discussion of Exhaust Emission and Fuel Economy Test Results	52
3.1.1 Federal Test Procedure	52
3.1.2 Modal Emissions	53
3.1.3 Aldehyde and Light Hydrocarbon Emissions	53
3.2 Discussion of New Jersey Testing	53
4. Acknowledgments	55
5. Appendices	
Appendix A: Listing of Vehicle & Test Parameters	72
Appendix B: Listing of Vehicle Use and Maintenance Data	78
Appendix C: Listing of Federal Test Procedure Results on Individual Vehicles	84
Appendix D: Listing of Modal Emission Results on Individual Vehicles	146
Appendix E: Measurement Technique for Light Hydrocarbons and Aliphatic Aldehydes	185
Appendix F: Test Fuel Inspection Reports	200

SECTION 1

INTRODUCTION

Since the motor vehicle is still considered to be one of the major sources of air quality degradation, the need for a realistic assessment of emissions from light-duty vehicles in the hands of the motoring public has been continuously recognized by the Environmental Protection Agency (EPA). One of the responsibilities of EPA, as provided through the Clean Air Act, is to determine these emissions factors and provide current data to quantify the automobile's contribution to atmospheric pollution. By conducting surveillance programs in major metropolitan areas, average emission factors for motor vehicles can be developed and supplied to the National Air Data Branch (NADB) and the Office of Transportation Land Use Policy (OTLUP) for their use in determining nationwide and metropolitan area emissions.

EPA's first major surveillance program using the present CVS technique, which is a mass measurement method of determining exhaust emissions, was in 1971. Surveillance programs were conducted prior to this however. A volumetric measurement method, normally called the 7-mode test, was used to determine the exhaust emissions. The FY 71 program determined the emissions from 1957-1971 light-duty vehicles. Similarly, the FY 72 program investigated 1966-1972 vehicles. This program, FY 73, sampled 1967-1974 light-duty vehicles.

In carrying out its continuing effort, the EPA contracted with General Environments Corporation to determine and provide emission test data from a representative sample (180) of vehicles operating in the

metropolitan area of Newark, New Jersey. This city was one of six areas to be investigated by EPA. The other U. S. metropolitan cities were Denver, Detroit, Houston, Los Angeles and St. Louis. This report describes the performance, procedures and results of the 180 vehicles sampled in Newark.

SECTION 2

TECHNICAL DISCUSSION

2.1 PROGRAM OBJECTIVES

The primary objective of this program was to determine the exhaust emissions of a scientifically valid sample of in-use 1967 through 1974 light-duty, consumer-owned vehicles in the Newark, New Jersey metropolitan area. This data along with that developed in five other major U. S. cities will subsequently be used to develop emission factors that will define the contribution of light-duty vehicles to the national air pollution inventory. A secondary objective was to determine vehicle fuel economy and real-time emissions on a modal basis.

2.2 PROGRAM DESIGN

To support the overall objective of this program two major requirements existed.

First, it was important that the vehicles truly reflected a representative sample of the nationwide population and that a selection process be followed that minimized any bias that could be encountered. That is to say, at the initiation of the selection process, every registered vehicle owner in the population should have an equal chance to be selected. The sample list provided by EPA which was based on nationwide distribution and miles traveled for each model-year vehicle, stipulated the number of vehicles in each model-year and the vehicle make and size, engine type, displacement, transmission type and number of carburetor venturis.

The second major consideration was to perform the various emission tests with an established methodology of well defined procedures and qualified calibrated test equipment. This was accomplished using the constant volume sampling technique in accordance with the 1975 Federal Test Procedure (FTP). All vehicles were subjected to this test incuding a full hot-start.

The data obtained allowed computation of emission rates in gms/mile of hydrocarbon, carbon monoxide, carbon dioxide and oxides of nitrogen in accordance with both the 1972 and 1975 FTP.

Specific light hydrocarbons (methane, ethane, propane, ethylene and acetylene) and aliphatic aldehydes were measured during the basic test.

Fuel economy was calculated for the 1972 and 1975 FTP. In addition, EPA's Highway Fuel Economy Test (HFET) was conducted on all vehicles and fuel consumption was determined by the carbon balance method.

1972 through 1974 model-year vehicles were all subjected to EPA's Surveillance Driving Sequence (SDS) and modal emissions were measured continuously for various accel/decel/steady-state modes.

2.3 TEST VEHICLE PROCUREMENT

This program required obtaining 180 automobiles that were consumer-owned and typical in-use vehicles. The number of each make was based upon the typical vehicle miles traveled for each model-year. The required number of vehicle makes for Newark is shown in Figure 2-1. A detailed listing of specific vehicles was provided by EPA which described model-year, make, displacement, vehicle size, transmission type and number of carburetor

MAKE	TOTAL	1974	1973	1972	1971	1970	1969	1968	1967
AMC	5	-	1	-	1	-	1	1	1
BUICK	11	1	2	2	2	1	1	1	1
CADILLAC	4	-	1	-	1	-	-	1	1
CAPRI	1	-	1	-	-	-	-	-	-
CHEVROLET	44	2	8	7	6	6	6	5	4
CHRYSLER	4	-	1	-	1	-	1	-	1
DATSUN	3	-	1	1	1	-	-	-	-
DODGE	10	1	2	2	1	1	1	1	1
FORD	37	2	7	6	5	5	5	4	3
LINCOLN	1	-	-	1	-	-	-	-	-
MAZDA	1	-	1	-	-	-	-	-	-
MERCURY	7	-	1	1	1	1	1	1	1
OLDSMOBILE	12	1	2	2	2	2	1	1	1
OPEL	1	-	-	1	-	-	-	-	-
PLYMOUTH	12	1	2	2	2	2	1	1	1
PONTIAC	13	1	2	2	2	2	2	1	1
TOYOTA	4	-	1	1	1	1	-	-	-
VOLKSWAGEN	10	1	2	2	1	1	1	1	1
TOTALS	180	10	35	30	27	22	21	18	17

FIGURE 2-1 VEHICLE LISTING (BY MAKE)

venturis. This section describes the methodology and procurement procedures used in obtaining the necessary vehicles to fit the specific requirements.

2.3.1 Test Vehicle Selection

To select a qualified sample list several steps were required and are depicted in Figure 2-2. The first step was to obtain a randomized registration within the site boundary. This listing was obtained from the R. L. Polk & Co. The designated areas of particular interest are shown below:

Zip Code	Area	Zip Code	Area
07101	Newark	07050	Orange
07102	Newark	07051	Orange
07103	Newark	07052	Orange (West Orange & Town Center)
07104	Newark	07079	South Orange
07105	Newark	07201	Elizabeth
07106	Newark	07202	Elizabeth
07107	Newark	07203	Elizabeth (Roselle)
07108	Newark	07204	Elizabeth (Roselle Park)
07109	Newark (Belleville)	07205	Elizabeth (Hillside)
07110	Newark (Nutley)	07206	Elizabeth
07111	Newark (Irvington)	07207	Elizabeth
07017	East Orange	07208	Elizabeth
07018	East Orange	07083	Union
07019	East Orange	07081	Springfield

The list supplied by Polk consisted of mailing labels, an example of which appears in Figure 2-3.

A mass mailing of 6000 letters were sent throughout the program to obtain a prospective candidate list that best fit the sample population profile. This introductory mailing contained:

- o EPA Introductory Letter - Figure 2-4
- o GEC Introductory Letter - Figure 2-5
- o Response Card - Figure 2-6

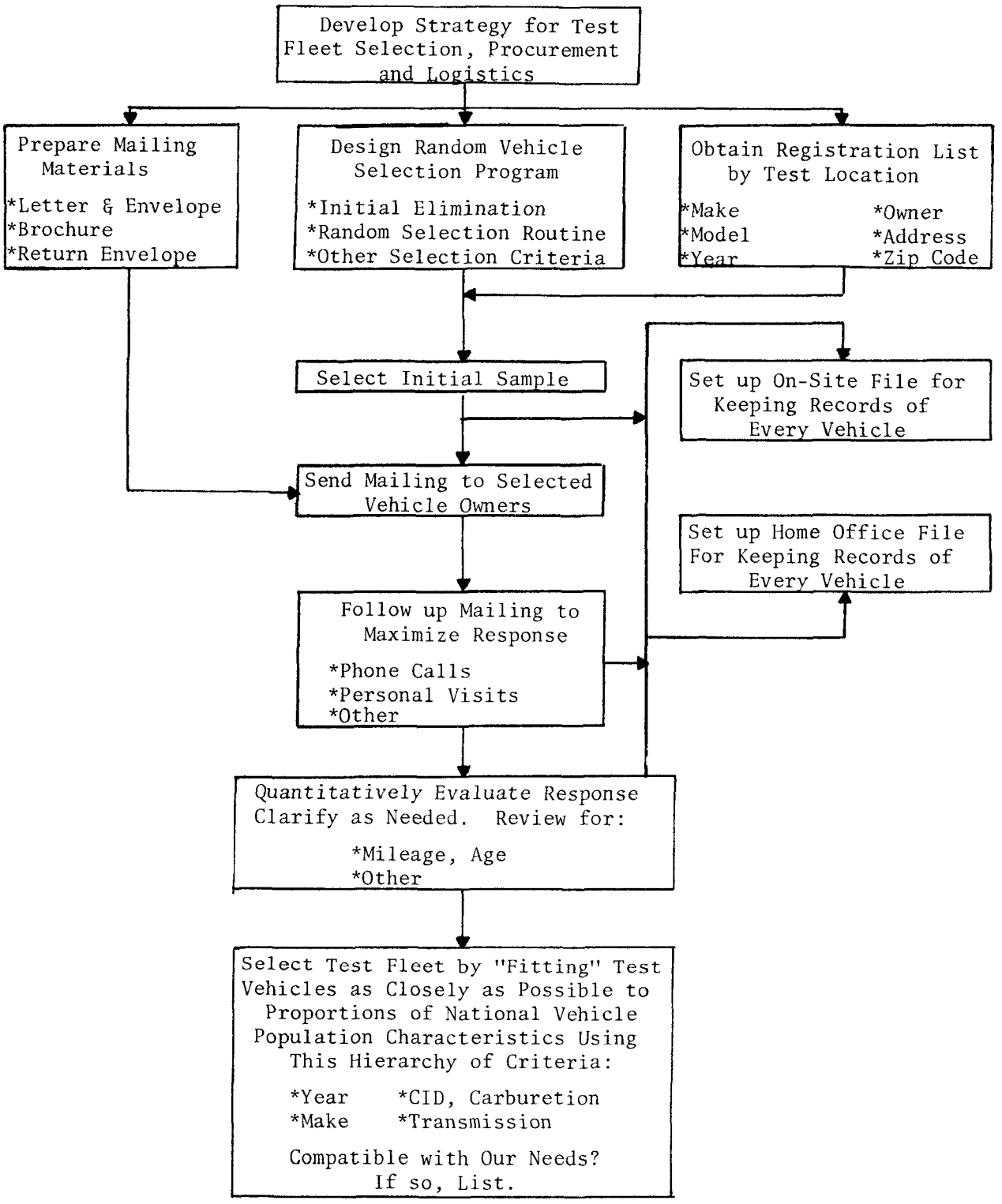

FIGURE 2-2 VEHICLE SELECTION PROCEDURE

MS ESTHER REBARBER 27 KROTIK PL NEWARK NJ 07111	MR JOHN DURKOT 46 DURAND PL NEWARK NJ 07111
MS WILMA M POMERANTZ 336 STUYVESANT AV NEWARK NJ 07111	MS GERTRUDE D FOERST 213 MAPLE AV IR NEWARK NJ 07111
MR CHARLES D MILLER 17 SHERMAN PL IR NEWARK NJ 07111	GEORGE F SINGLETARY JR 198 MUNN AV NEWARK NJ 07111
MR JOSEPH L COLELLA 17 SUNSET TER NEWARK NJ 07111	MR ANDREW GRANTZOW 115 WESTERN PKWY NEWARK NJ 07111
MR ANTONIO SACCA 527 MADISON AV ELIZABETH NJ 07201	ENRIQUE A LOPEZCALLEJA 822 REBECCA PL ELIZABETH NJ 07201
MR ROCCO PEPINO XXX 208 CHRISTINE ST ELIZABETH NJ 07202	MR GEORGE NICHOLAS 330 BOXWOOD CT ELIZABETH NJ 07202

FIGURE 2-3 MAILING LABELS

Form Approved OMB No. 158-R0106

UNITED STATES ENVIRONMENTAL PROTECTION AGENCY
WASHINGTON, D.C. 20460

A Message to the Vehicle Owner

The U. S. Environmental Protection Agency, in carrying out the Clean Air Act, has contracted with competent testing organizations to conduct emission tests on certain randomly-selected 1967 through 1974 - model vehicles. The purpose of these tests is to develop emission factors for use in making nationwide emission estimates. The test results from any individual vehicle will be used only by the EPA in comparison with the test results from all similar vehicles. The outcome of the test on any individual vehicle cannot result in any adverse action against the vehicle owner.

The enclosed letter to you, from one of these testing organizations, explains this project in detail, and asks to test your vehicle. The purpose of this message is to urge that, if at all possible, you allow your vehicle to be tested in this program.

To assure valid results from this program, the specific vehicles that will comprise the sample to be tested are randomly selected in proportion to a nationwide population average, without bias, from vehicle registration lists provided by private research firms. Your vehicle has been tentatively selected by means of this process. Your participation in the test will represent a real and significant contribution to the cause of Clean Air.

Please read the enclosed letter. Note that it says a follow-up will be made. Should you have an unlisted telephone number, or if for any other reason it may be difficult for the testing organization to reach you by phone, please call the number given in the enclosed letter, from the testing organization, for your participation.

Sincerely yours,

Eric O. Stork
Deputy Assistant Administrator
Mobile Source Air Pollution Control

FIGURE 2-4 EPA INTRODUCTORY LETTER

Form No. AA-101-5

GENERAL

General Environments Corporation / 109 Aldene Road, Roselle, New Jersey 07293 / (201) 245-4211

Form No. AA-101-3

Form Approved OMB No. 158-R0106

Dear Vehicle Owner:

You may be able to make an important contribution towards controlling the nation's air pollution problem, and receive at least one, and perhaps two U.S. Savings Bonds for your cooperation.

The U.S. Environmental Protection Agency is conducting an important testing program for vehicle exhaust pollution in six major metropolitan areas: Detroit, St. Louis, Denver, Los Angeles, Houston, and Newark. Our organization has been selected by the Federal Government to perform these tests in the Newark area. We are writing you because your vehicle has been randomly selected as a candidate for testing.

Enclosed is a postpaid reply card. If you are willing to participate, please answer the questions on the card, and mail it at your earliest convenience. We are especially interested in whether or not your vehicle has undergone the State of New Jersey exhaust pollution tests this year. If your vehicle is due for an exhaust emission inspection soon, we would like to test your vehicle before the State of New Jersey performs its test. For this and a report to us of the results of your State test, you will receive a $25 U.S. Savings Bond. There is no pass-fail to our test.

Should your vehicle subsequently fail the New Jersey test and you have it tuned up and successfully retested, we offer you a $50 U.S. Savings Bond to allow us to test your car again.

All tests will be performed under simulated normal driving conditions. No unusual operations will be performed on your vehicle, and it will be fully insured while in our possession.

The Environmental Protection Agency has also authorized us to provide you with a full tank of fuel after we have finished testing your vehicle; and, if you wish, the use of a late model, fully-insured loan car while your vehicle is in our possession.

We know you will want to be a part of this important project. Please complete and return the enclosed postpaid reply card today. We will contact you shortly should your vehicle meet the requirements of our program.

Sincerely yours,

A. R. Martin

A. R. Martin

Form No. AA-101-3

FIGURE 2-5 GEC INTRODUCTORY LETTER

Are you willing to volunteer your vehicle for pollution testing? If so, please provide the following information, and mail this postcard today.

Name_____/Telephone_____
Street_____/Best Time to
City_____Zip_____/call_____
Make of vehicle (Chev.,Ford,Plym.,etc.)_____Year_____
Engine size (displacement)_____Cubic Inches.
(or cubic centimeters)
Carburetor: 1 barrel , 2 barrel , 4 barrel , no barrel
(fuel injection)
Transmission: Automatic ; Manual
Air Conditioning: Factory Installed? Yes ; No .
Operational? Yes ; No .
During which month is your vehicle scheduled for the New Jersev State Safety Inspection? _____ (Month)

Company Use Only
Date of Contact_____Vol./No._____
FORM NO. AA-101-4

FIGURE 2-6 VEHICLE RESPONSE CARD

Concurrently, phone contacts were made in addition to contacting civic and fraternal organizations, local college groups and rental agencies. It was important that these other sources be utilized only when absolutely necessary. Consequently, less than 15 cars were obtained from these groups, of which 2 were rental vehicles.

Once the original contact was made, a file was established and maintained by year and make. Information was obtained from car owners regarding engine size, transmission and carburetor venturis. If the vehicle fit the requirements and the owner agreed to participate a tentative schedule was established. The specific vehicle requirements established by EPA allowed some flexibility for substitutions. This listing of required vs. actual is shown in Figure 2-7. If no vehicle identification is shown in the actual column then this indicates the required vehicle was obtained and tested. An example of the vehicle identification is shown below.

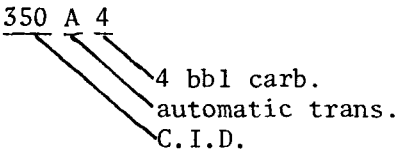

2.3.2 Test Incentives

All participating owners whose vehicle successfully completed the test program requirements received

- o a fully insured loan car while their vehicle was being tested
- o a full tank of gas in their car on completion of testing
- o a $25 U.S. Savings Bond

1973 EMISSIONS FACTORS PROGRAM

TEST SITE: NEWARK, NEW JERSEY CONTRACTOR: GENERAL ENVIRONMENTS CORPORATION

MAKE	TOTALS	1974		1973		1972		1971		1970		1969		1968		1967	
		Proposed	Actual	Proposed	Actual	Proposed	Actual	Proposed	Actual	Proposed	Actual	Proposed	Actual	Proposed	Actual	Proposed	Actual
American Motors	5			258A1	360A2			304A2				290A2		232M1	390A2	232M1	232A1
Buick	11			350A2		350A4	455A4	350A2									
		455A4	350A2	455A4		455A4		455A4		455A4		350A2		430A4	350A2	340A4	
Cadillac	4			472A4				472A4						472A4		429A4	
Capri	1			122A2													
Chevrolet	44	307A2	350A2	140A1		140M2	140M1	140A1		250M1		250M1	250A2	230A1	230A2	250M1	
		350A2		250M1		250A1	307A2	307A2		307A2		307A2		307A2		283A2	
				307A2		307A2	250A1	350A2		350A2		327A2		327A4		283A2	
				307A2		350A2		350A2		350A2		350A2	350A4	350A2	307A2	327A4	
				350A2		350A2		350A4		350A4	350A2	350A4		396A4	307A2		
				350A2		350A4	350A2	400A2		400A2		400A2	327A2				
				350A4	350A2	400A2	350A2										
				400A2	350A2												
Chrysler	4			400A2				440A4				383A2				383A2	
Datsun	3			071M2		097M2		071M2									
Dodge	10			225A1		318A2											
		360A2	198A2	318A2		360A2		318A2		383A2	383M4	225A1		383A2		318A2	273A1
Ford	37	302A2	250A1	122M2		122A2		122M2		200M1		302A2		200A1	390A4	289A2	
		351A2	400A4	200A1		302A2		200A1		302A2		302A2		289A2		289A2	
				302A2		351A2		302A2		351A2		351A2		302A2		302A2	
				351A2		351A2		351A2		351A4	351A2	351A2		390A2			
				351A2		400A2	351A2	429A2	390A2	390A2		390A2					
				400A2		429A4	122M2										
				400A2													
Lincoln	1					460A4											
Mazda	1			070M4													
Mercury	7			429A4		400A2	429A4	400A2		429A2		390A2	351A2	302A2		390A2	
Oldsmobile	12			350A4		350A2		350A4		350A2							
		350A4		455A4	350A4	455A4		455A4		455A4		455A4	455A2	350A2		425A4	
Opel	1					116A2											
Plymouth	12			318A2		225M1	318A2	225M1		318A2							
		318A2	360A2	360A2	225A1	318A2		318A2		318A2		318A2		318A2		225A1	
Pontiac	13			350A2		350A2		350A2		350A2		350A2					
		400A2		400A2		455A4	400A4	400A2	455A4	400A2		400A2		400A2		326A2	
Toyota	4			120M2		097M2	120M2	071M1		071M1							
Volkswagen	10			097M1		097M1											
		097M1		103A2	097M1	097M1		097M1		097M1		091M1		091M1		091M1	
TOTALS	180	10		35		30		27		22		21		18		17	
		10		45		75		102		124		145		163		180	

FIGURE 2-7 TEST VEHICLE SUBSTITUTION LIST

Those those particular owners who subsequently had their cars inspected by the State of New Jersey and failed were given a $50 U. S. Savings Bond if they:

- had the car tuned up
- successfully retested by the State of New Jersey
- retested by GEC

2.3.3 Test Vehicle Handling

Once a car arrived at the laboratory, a preliminary inspection was conducted which consisted of an inspection to determine if there were obvious problems with the exhaust or emission control systems and the vehicle had the proper engine, transmission, and carburetor combination. Included in this inspection was general mechanical condition of the vehicle as well as driveability and safety of operation.

Any replacements to be made due to aborted tests or non-compliance with the test requirements were contacted from a reserve file.

After the preliminary inspection was conducted, an exchange of cars and receipts (Figure 2-8) took place. The test vehicle was driven to the defueling area and the gas tank emptied. The gasoline was deposited into a 55 gallon drum. The specified volume of test fuel was pumped into the car's gas tank.

A 10 minute course was set up through the local area and each car was driven over this course before being placed in the laboratory. The cars were driven into the laboratory and parked. At this point the date and time were posted on each car's windshield. The owner's drive to the laboratory and the 10 minute purge run constituted the vehicle preconditioning.

GENERAL ENVIRONMENTS CORPORATION

Date_____

TO WHOM IT MAY CONCERN:

I certify that I have this date received from General Environments Corporation (GEC) the following vehicle for my private use while my car is being tested for exhaust emissions.

Vehicle Make_____Model_____Year_____

License No._____Odometer Reading_____

I further understand that my car will be "in test" for approximately 24 hours and that I will be advised when to pick up my car.

_____
(Signature of Car Owner)

General Environments Corporation hereby acknowledges receipt of the below described vehicle for the purpose of conducting an exhaust emissions test.

Vehicle Make_____Model_____Year_____

License No._____Odometer Reading_____

Remarks:_____

_____

_____

_____

_____
(GEC Representative)

FIGURE 2-8 TEST VEHICLE RECEIPT

GEC Form 4734-4

The car was hand pushed within the laboratory at all times and included hand pushing onto the dynamometer to start the test.

The fuel used in all tests was Texaco Indolene 30 test fuel. A certified analysis of the test fuel is included in Appendix G of this report.

A final inspection was performed after the car was situated on the dynamometer before the actual test was begun. It was determined that the emission controls were connected and that the engine had not been modified extensively. This ensured vehicles which were representative of the vehicle population. The technician attached the sampling boot to the exhaust system.

After the test was completed, the ignition timing, idle speed and dwell were measured and recorded. The carbon monoxide and hydrocarbons in the exhaust were measured and recorded while the engine was idling. This total procedure is shown in Figure 2-9.

2.4 FACILITIES AND EQUIPMENT

2.4.1 Test Location

All testing covered in this report was conducted at GEC's temporary test site at 109 Aldene Road, Roselle, New Jersey, located within ten miles of the metropolitan area of Newark at an elevation of 23 feet above sea level. The facility contains 4400 square feet of laboratory and soak space with adequate outside parking adjacent to the building. To provide for adequate cooling a 20 ton air conditioner was installed to maintain soak area temperatures between 60°-86°F and test area temperatures between 76°-86°F.

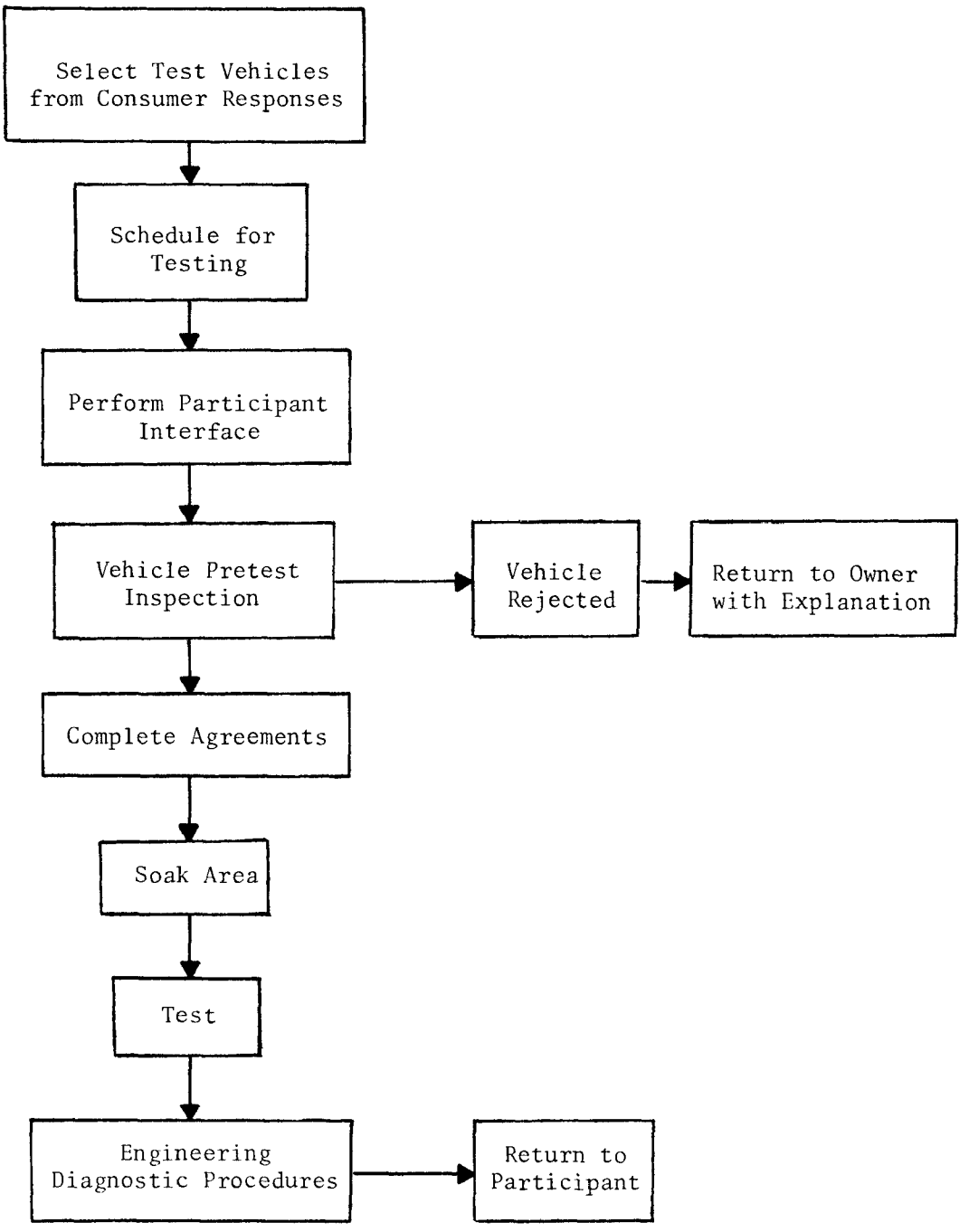

FIGURE 2- 9 VEHICLE HANDLING PROCEDURES

2.4.2 Constant Volume Sampler

The constant volume sampler utilized in the performance of this contract was a Scott Constant Mass Flow Sampler, Model 301, modified by GEC to meet the specific test requirements. The sampler was specifically designed and constructed to condition and collect automotive exhaust gases as generated from a light-duty vehicle when operated over the Federal Test Cycle.

2.4.3 Exhaust Analysis Console

A Scott Exhaust Analysis Console, Model 119 containing the analyzers for CO and CO_2 and gas dryer/scrubber was used in conjunction with a GEC constructed console containing analyzers for HC and NO_x. The plumbing of the consoles was modified to shorten system response time in order to successfully perform modal analysis. The major components used were:

- Beckman Model 315 NDIR-CO analyzer with ranges of 0-.3/3/5% CO.
- Beckman Model 315 NDIR-CO_2 analyzer with a range of 0-4/8% CO_2
- Beckman Model 400 hydrocarbon analyzer with ranges of 0-300/1000/3000/10,000 ppm C
- Thermo Electron Model 10A chemiluminescence analyzer with ranges of 0-100/250/1000/2000 ppm NO
- Leeds & Northrup Speedomax XL-600 dual-pen strip-chart recorders (2)

2.4.4 Laboratory Standard Calibration Gases

A complete set of laboratory standard calibration gases were procured by GEC for subsequent analysis by the EPA laboratories in Ann Arbor, Michigan. The "naming" of gases by EPA for all contractors was done

concurrently prior to the start of testing. The number of various gases stipulated was of such a quantity as to provide a minimum of five points per range for the CO and CO_2 analyzers and three points per range (including zero) for the HC and NO_x analyzers. The standard gases and their nominal concentrations are shown in Figure 2-10. Upon return from EPA all gas cylinders were fitted with gold caps to ensure easy identification. Thereafter, all working span gases used in the day-to-day calibration were analyzed against these "golden standards" for concentration determination.

All zero gases were analyzed by the specialty gas supplier and certified to meet the specifications contained in the Federal Register.

2.4.5 Chassis Dynamometer

A Clayton Model ECE-50 chassis dynamometer with a belt driven variable inertia flywheel assembly was used.

The dynamometer was equipped with 250 lb. increment inertia weights and a 0-50 hp power absorption unit. Readout instrumentation included a speedmeter and a roadload horsepower meter.

2.4.6 Equipment for Aldehyde and Light Hydrocarbon Measurement

The following major equipment was used in determining the specific light hydrocarbons of interest.

- Perkin-Elmer Model 900 gas chromatograph with Porapak "Q" column
- Infotronic Model CRS 108 digital integrator with Victor Digimatic printer
- Leeds & Northrup Speedways "W" single channel recorder with .1-1.0 mv response

HC-FID (ppm C in air) RANGE			
0-300	0-1000	0-3000	0-10000
129.7	440	1306	3978
261.9	879	2601	8097

CO_2-NDIR (% CO_2 in air) RANGE	
0 - 4	0 - 8
.608	(1.574)
1.574	(2.404)
2.404	(4.026)
3.212	5.92
4.026	8.10

NO_X-CL (ppm NO_X in N_2) RANGE			
0-100	0-250	0-1000	0-2000
40.3	(94.1)	483	(1000)
94.1	213.4	1000	1942

CO-NDIR (% CO in N_2) RANGE		
0 -.3	0 - 3	0 - 5
.0495	(.1532)	(.510)
.1024	(.2835)	(1.552)
.1532	.510	(2.542)
.2237	1.552	3.61
.2835	2.542	4.55

( ) INDICATES MULTIPLE USE

FIGURE 2-10 LABORATORY STANDARD CALIBRATION GASES

The determination of aldehydes was made with a Bausch & Lomb Spectronic 20 Spectrophotometer. Also, a special sampler was fabricated by GEC which included sample and exhaust manifolds, vacuum pump and a flow switching control system.

2.4.7 Miscellaneous Equipment

In addition to the major equipment described, various other support equipment was utilized. A data acquisition and control system using a Hewlett-Packard 2116A computer was used in conducting analysis of the acceleration and deceleration modes of the surveillance driving cycle. Software programs were developed and used for data reduction of: 1) light hydrocarbon and aldehyde determination; 2) fuel economy calculations; 3) mass emission calculations; 4) propane recovery results; 5) highway fuel economy calculations and 6) calibration curve development.

Further support is described below.

A Mettler analytical balance, Model H315 was used to weigh propane cylinders used during propane recovery tests of the CVS. The balance accuracy was 0.1 milligram and a range of 0-1000 grams.

A Varian Associates Model G-1000 Time/Speed Recorder was employed to provide a graphic record of the simulated vehicle speed versus the prescribed driving course. Prior to implementing the test schedule the chart speed of the driver's aide was determined several times. The chart speed was determined to be within the ± 2 second tolerance.

A Penske timing light Model 244.2115 was employed to determine test vehicle engine timing. A Snap-on Model MT416 primary tach dwell meter was used to measure point dwell and idle r.p.m.

Additional items of equipment included a cooling fan to move air through the test vehicle radiator, front wheel restraining blocks, vehicle restraining cables, tire pressure gage (0-50 psi) and miscellaneous tools.

A Meriam Laminar Flow Element (LFE) Model 50MC2-6SF with a range of 0-1000 SCFM was employed to calibrate the constant volume sampler mass airflow. The LFE was employed with a Model 310EF10 inlet absolute pressure gage and a Model 40HE35 differential pressure indicator.

A standard aneroid barometer was used to determine local atmospheric pressure.

A Brown-Honeywell 12-channel temperature recorder was employed to monitor and record soak area temperature at 30 second intervals.

A Sun Model EPA-75 HC/CO analyzer for measuring idle emissions.

2.5 EQUIPMENT QUALIFICATION, CALIBRATION AND CROSS-CHECK

Instrumentation and equipment were selected to meet the various types of exhaust emission tests. To insure the integrity of the test and validity of the data, a comprehensive quality control procedure was established jointly with EPA. In addition to daily and weekly routine calibrations all equipment was qualified and approved by EPA prior to the start of testing and after the completion of the test program. Additionally, continuing cross-checks were made throughout the performance of the program. The specific compliance criteria for the analytical console, chassis dynamometer, constant volume sampler and other equipment are described in the following paragraphs.

2.5.1 Constant Volume Sampler

The constant volume sampler (CVS) was calibrated in accordance with established procedures specified in the Federal Register.

The mass airflow was determined by means of a Meriam Laminar Flow element at 10 increments of flow. Incremental flow changes were effected by means of a valve situated between the laminar flow element and the CVS. The differential pressure across the mass pump was recorded for each increment of flow. The standard volume per revolution of the pump was calculated and plotted against the differential pressure in accordance with EPA's recommended procedures.

$$V_o = \frac{Q_s}{n} \cdot \frac{T_p}{530} \cdot \frac{406.8}{P_p}$$

where:

V_o = pump flow in SCFM

Q_s = absolute flow rate thru LFE in SCFM

n = pump speed in rpm

T_p = absolute air temperature at pump inlet in °R

P_p = absolute pressure at pump inlet in inches of H_2O

The flow rate (Q_s) through the laminar flow element (LFE) was determined in accordance with the prescribed method set forth by the manufacturer.

$$Q_s = Q_i \cdot T_L \cdot \frac{P_L}{406.8} \cdot 1$$

where:

Q_i = indicated flow rate thru LFE in SCFM

T_L = temperature correction factor in °R

P_L = absolute pressure at LFE inlet in inches of H_2O

The CVS calibration curve was checked by injecting known amounts of propane into the CVS and calculating the propane recovery based upon the total air volume moved by the CVS pump as shown by the sample calculation sheet in Figure 2-11, which was used to verify computer data reduction.

2.5.2 Emission Analysis Console

A daily procedure followed by GEC incorporated a leak check of the CVS bags concurrently with the analytical system. A self-sealing quick disconnect was used at the junction between the CVS bags and the sample ports of the CVS. The leak check was first performed on the analytical system by sealing the sample inlet. A visual observation of analyzer flow rates and pressure would indicate that a leak was present. In turn each evacuated CVS bag was subjected to this verification to ensure a zero flow existed.

The calibration of the analytical instrumentation consisted of establishing the manufacturer's operational parameters and then introducing gold standard gases to determine instrument response. The following ranges were established.

Carbon Monoxide	0-0.3 percent
	0-3 percent
	0-5 percent
Carbon Dioxide	0-4 percent
	0-8 percent
Total Hydrocarbons	0-300 ppm carbon
	0-1000 ppm carbon
	0-3000 ppm carbon
	0-10,000 ppm carbon
Nitrogen Oxides	0-100 ppm NOX
	0-250 ppm NOX
	0-1000 ppm NOX
	0-2000 ppm NOX

Weekly 3-point analytical checks were conducted to assure curve generation consistency. Additionally, the curves on all ranges were reconstructed on a monthly basis.

The converter efficiency of the NO_X analyzer was checked weekly.

EPA Propane Injection Calculation Sheet

$$V_{mix} = K_1 \times V_o \times N \times \frac{P_p}{T_p}$$

$$V_{mix} = .6947368 \times V_o _____ \times N _____ \times \frac{P_p}{T_p} = _____$$

$$HC_{mass} = V_{mix} \times 17.3 \times \frac{HC_{conc}}{1,000,000}$$

$$HC_{mass} = _____ \times 17.3 \times _____ = _____$$

Bar = _____ x 25.4 = mmHG _____

Inlet Dep. = _____ x 1.868 = mmHG _____

P_p = Bar - inlet dep. _____

T_p = 460 + temp. of exhaust gas _____

Cyl Wt. Before _____

Cyl Wt. After _____

Δ Wt. _____

Calc. Wt. _____

% Diff. _____

FIGURE 2-11 PROPANE RECOVERY CALCULATION

Two dual pen strip chart recorders complete the sample analytical system. One recorder monitored the output from the CO and CO_2 analyzers while the other monitored hydrocarbon and NO/NOX. Each channel of the recorders provided a full scale deflection with 10 millivolts of input signal.

2.5.3 Chassis Dynamometer

The chassis dynamometer met the specifications contained in 35 Federal Register 219, Part II, 36 Federal Register 128 and the contract scope of work. The dynamometer was calibrated both for speed and road load horsepower.

Speedometer calibration was accomplished by accelerating the dynamometer to 46.5 miles per hour and measuring roller revolutions with a strobotach. At 46.5 miles per hour the roller rpm was 1800 as specified by the manufacturer.

Road load horsepower (RLHP) calibration consisted of warming the dynamometer for 15 minutes at 30 mph with a non-test vehicle. This vehicle was then employed to accelerate the dynamometer rollers to 50 mph. This indicated road load horsepower at 50 mph was recorded. The vehicle then accelerated to an indicated 60 mph and the drive wheels physically lifted from the rollers with a pneumatic bumper jack. The coast time from 55 to 45 mph was determined by means of a strobotach and stopwatch. Triplicate runs were conducted for several points over the working range. The following calculation was employed to determine the actual road load horsepower:

$$HP_d = (1/2)\ (W_1/82.2)\ (V_1^2 - V_2^2/550t)$$

$$= 0.06073\ \frac{(W_1)}{t}$$

where: W_1 = equivalent inertia in pounds

V_1 = initial velocity in ft/sec (55 mph = 80.67 ft/sec)

V_2 = final velocity in ft/sec (45 mph = 66.00 ft/sec)

t = elapsed time for rolls to coast from 55 to 45 mph

A plot of the indicated road load horsepower vs. the road load horsepower is shown in Figure 2-12. This plot was translated to a point-by-point table and posted by the dynamometer to provide a quick and easy reference.

2.5.4 Evaporative Emissions Equipment

The determination of evaporative emissions was not a requirement for the Newark test program.

2.5.5 Equipment for Special Additional Tests

2.5.5.1 Light Hydrocarbon Analysis

Utilizing a gas chromatograph (GC) for this analysis it was important to precisely calibrate the instrument initially with known calibration gases. This calibration was confirmed on a daily basis. Initial calibration was made utilizing a set of analyzed standard gases. The specific gas mixture obtained from Air Products, Inc., was:

- o 1.1 ppm CH_4 in N_2 (methane)
- o 1.2 ppm C_2H_2 in N_2 (acetylene)
- o 1.1 ppm C_2H_4 in N_2 (ethylene)
- o 1.2 ppm C_2H_6 in N_2 (ethane)
- o 1.0 ppm C_3H_8 in N_2 (propane)

Peak identification, elution times and area to concentration equivalences were determined from this calibration as shown in Figure 2-13. Repetitive analyses with the test gas was made to establish mean deviation and reproducibility.

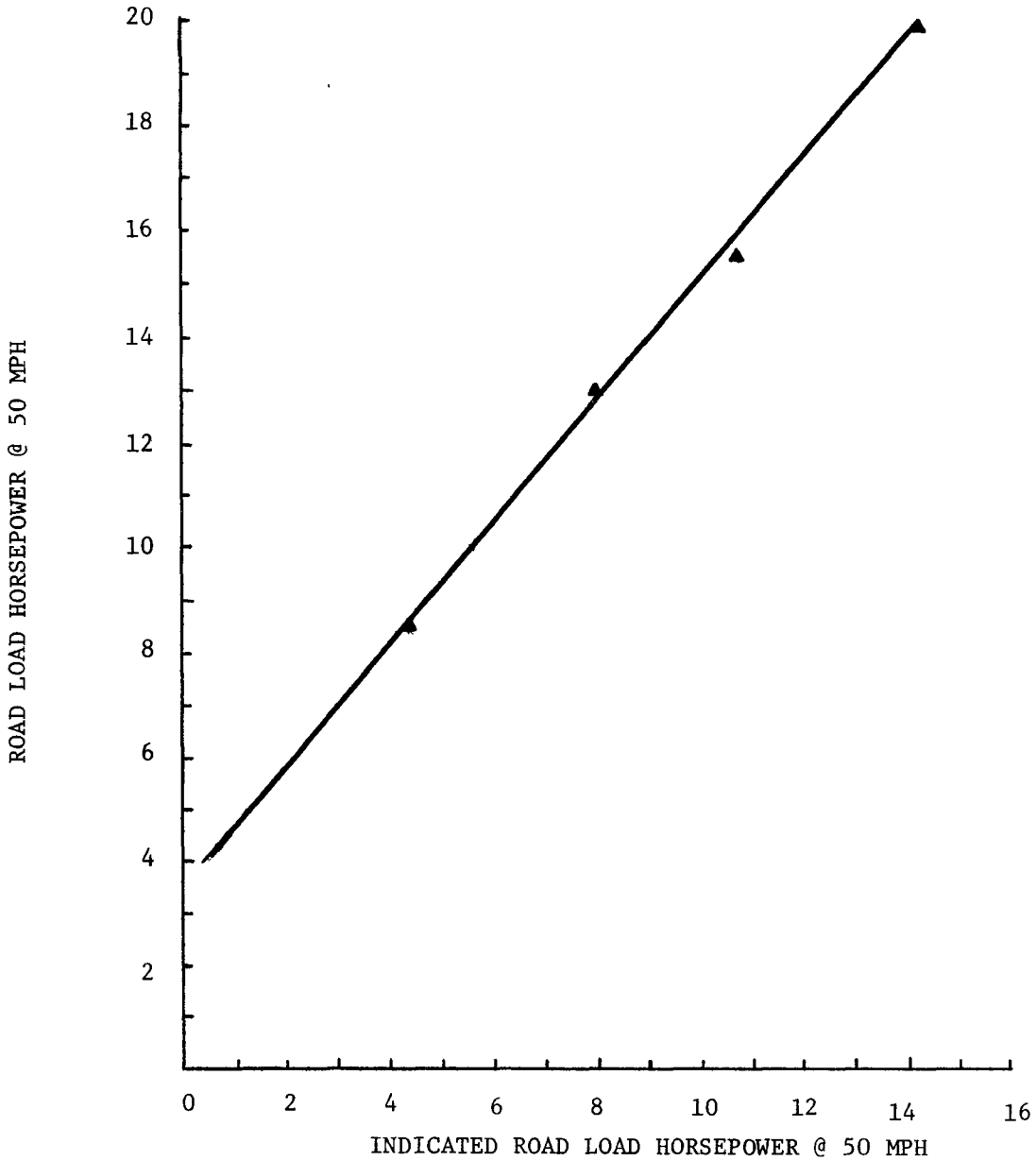

FIGURE 2-12 ROAD LOAD HORSEPOWER CALIBRATION

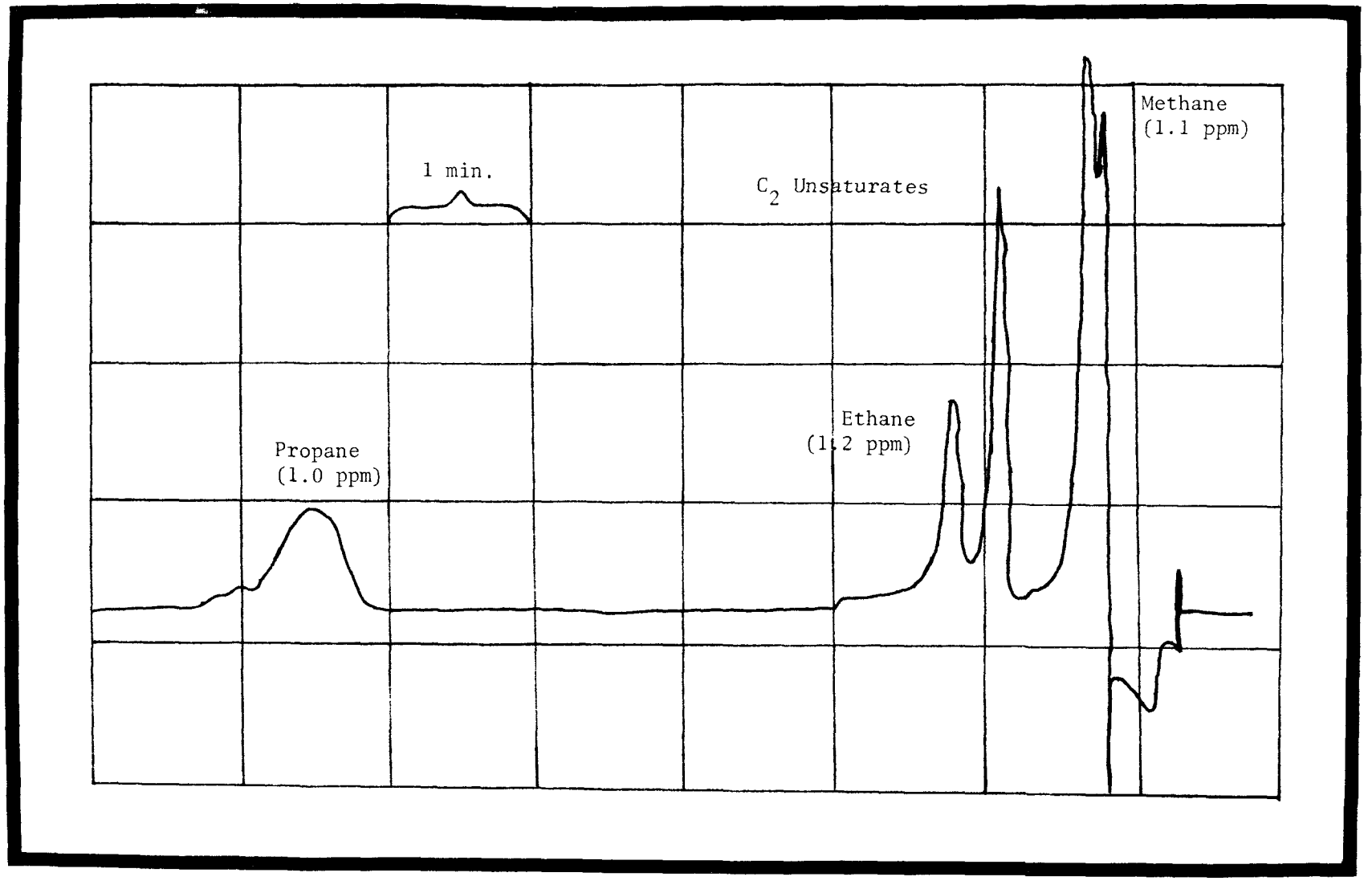

FIGURE 2-13 TYPICAL G.C. ANALYSIS FOR LIGHT HYDROCARBON MIXTURE

After five consecutive tests the average count (representing the area under the curve) for the test gases was determined and the average count/ppm. These results are shown below.

Compound	Counts/test gas	Counts/ppm
CH_4	4151.6	3774.2
C_2H_2	7254.8	6045.7
C_2H_4	4893.6	4448.7
C_2H_6	3936.0	3936.0

Further, the standard deviation for each compound was also determined.

Compound	$\pm$ Counts x 10^2	$\pm$ PPM x 10^2
CH_4	4.89	12.98
C_2H_2	1.37	2.28
C_2H_4	9.48	2.13
C_2H_6	1.11	4.64
C_3H_8	1.05	2.68

2.5.5.2 Aliphatic Aldehyde Analysis

Calibration of this method of analysis was done by injecting a known amount of reagent grade acetaldehyde vapor into a CVS bag filled with a metered amount of pure nitrogen. Preparation of the acetaldehyde can yield a purity greater than 99%. The analysis used is the same as the 3MBTH method for exhaust gas analysis. The molar absorptivity of acetaldehyde was near 65,000.

2.6 TEST PROCEDURES

2.6.1 Vehicle Preparation

Upon arrival at the laboratory each vehicle was carefully inspected for exhaust system continuity, engine size, number of carburetor venturis, completeness, condition of existing emission control systems, and drive-ability. Each item was checked on a list as completed. The vehicle was

then moved to the defuel/fuel area and the contents of the gas tank emptied into a drum by means of a high capacity fuel pump. Test fuel was then introduced to a level of 40 percent of tank capacity. Pumping time was calculated by the equation:

$$\text{Pump time (min)} = \frac{(0.4)(\text{tank capacity})}{\text{Pump rate in gal/min}}$$

Upon completion of the fueling each vehicle was driven over a prescribed 10 minute course to remove residual non-test fuel from the fuel lines, fuel pump, and carburetor. This run to the laboratory and the ten minute course comprised the initial vehicle preparation.

The vehicles were placed inside the laboratory with the time and date recorded for the start of the temperature soak period. After 12 hours the vehicle was pushed onto the dynamometer by hand. Just prior to test each vehicle was reinspected to ensure that no change had occurred since the initial inspection. Tires were inflated to 45 pounds per square inch, the cooling fan positioned and turned on, the hood opened, the tail pipe connector attached, and the driver's aide placed in the car.

2.6.2 Equipment Preparation

The dynamometer was warmed up prior to each day's testing. The CVS was turned on at 300 CFM for a minimum of 20 minutes prior to use and the analytical instrumentation was turned on for at least 30 minutes prior to system leak checks and prior to conducting the daily propane recovery test. Flow rates were established for each instrument and zero gas response verified. Prior to introducing test samples all instruments were zeroed and spanned to ensure accurate sample response.

2.6.3 Federal Exhaust Emission Test Procedure

Exhaust emission tests were performed in accordance with the procedures specified in 37 Federal Register 221, November 15, 1972 (sections 85.075-9 through 85.075-24) and 36 Federal Register 128, July 2, 1971 (section 1201.85) Also, as amended in 38 Federal Register 124, June 28, 1973. The exception was that the hot-start test was run the full 1372 seconds.

2.6.3.1 Pretest Procedures

The analytical instruments were turned onto the range to be used and allowed to warm up. The analyzers were zeroed and then spanned to adjust the attenuation of each instrument to the desired range. The values were then compared to previous readings and adjusted if required to within one percent of span. The NOX to NO converter was checked for efficiency by preparing a gas bag of nitric oxide and oxygen. The bag was mixed and connected to the sample inlet of the NO/NOX analyzer. Alternately the NO and NOX values were read at one minute intervals for a period of 12-15 minutes. Routinely the NOX value remained constant while the NO value reduced with time.

A propane recovery test was conducted daily prior to starting the vehicle tests. The propane recovery test consisted of injecting known amounts of propane in the sample inlet of the CVS over a 15 minute period and collecting an aliquot of the diluted sample in a plastic (Tedlar) bag. Subsequent analysis of the diluted propane from the sample bag and a parallel sample from the air bag provided a means of calculating the recovery percent for the sampling system. A recovery of ± 2.0 percent of propane injected was experienced during the test phase of the program. This was sufficient to reveal any significant leaks in the CVS system.

The analysis console and the sampling system (CVS) were leak checked daily to determine that the systems were airtight.

2.6.3.2 Test Procedure

The vehicle was manually placed on the dynamometer with the drive wheels situated on the rollers. The engine compartment cover was opened and the cooling fan turned on. The CVS and dynamometer were in a warmed up condition with the CVS pump running but not sampling and the heat exchanger steady at 110°F. The sample flow rates were adjusted and the flexible exhaust tube connected to the tailpipe. At the beginning of the test the pump revolution counter and sample collection were simultaneously started. After 15 seconds the vehicle was placed in gear and 20 seconds after the engine started the driving schedule commenced. At the 505 second point in the driving schedule the sample was directed into a second bag through the five second period after the final deceleration. Analysis of the 505 second bag commenced immediately. At the conclusion of the test the sampling was stopped and the sample and air bags analyzed. The tail pipe connector was disconnected, the engine compartment cover closed and the cooling fan turned off. The interval between the cold start test and the hot start test was 10 minutes. The test procedure was repeated for the hot start test. Upon completion of the hot start test the tail pipe connector was removed and the engine timing, idle rpm and dwell were measured, and recorded. The raw exhaust hydrocarbon and carbon monoxide levels were determined.

2.6.4 Modal Exhaust Emission Test Procedure

Modal exhaust emissions measurements were comprised of two separate tests: the steady state and the Surveillance Driving Sequence. Each test was preceded by a soak period of twenty minutes (max.) from the last sustained vehicle operation. At the end of the soak period the vehicle was operated on a chassis dynamometer at 50 mph for three minutes. During this time the dynamometer road load horsepower setting was adjusted.

Steady state exhaust emissions were measured at 0, 5, 10, 15, 30, 45 and 60 mph using the CVS dilute bag collection technique. At each speed, equilibrium was maintained for at least 30 seconds before sampling was started. A bag sample of two cubic feet was collected over a period of six minutes.

After another soak and preconditioning period, described above, the vehicle was operated at idle for one minute before the modal sequence began. This driving schedule is made up of 32 acceleration and deceleration modes. These modes are combined into a driving schedule established by EPA and called the Surveillance Driving Sequence (SDS). Figure 2-14 depicts the 32 modes with their average speed and rates of acceleration.

A special computer program was developed for the analysis of the 32 modes.

The mass emissions for the entire sequence were determined from the mass flow rate of the CVS and concentration of emissions in the bag.

A block diagram of the entire SDS procedure is shown in Figure 2-15.

Mode						
No.	Type	Speed Range (mph)	Time in Mode (sec)	Average Speed (mph)	Average Acceleration Rate (mph/sec)	Distance (miles)
1	Accel	0-30	12	18.05	2.50	0.0602
2	Decel	30-0	16	16.66	-1.88	0.0741
3	Accel	0-15	8	9.04	1.88	0.0201
4	Accel	15-30	11	23.07	1.36	0.0705
5	Accel	30-45	13	37.65	1.15	0.1360
6	Decel	45-30	12	38.05	-1.25	0.1268
7	Accel	30-60	17	45.80	1.76	0.2163
8	Decel	60-45	12	51.48	-1.25	0.1716
9	Accel	45-60	14	52.54	1.07	0.2043
10	Decel	60-15	30	40.40	-1.50	0.3367
11	Accel	15-60	26	43.42	1.73	0.3136
12	Decel	60-0	21	33.83	-2.86	0.1973
13	Accel	0-60	32	37.27	1.88	0.3313
14	Decel	60-30	23	46.86	-1.30	0.2994
15	Decel	30-15	9	23.18	-1.67	0.0579
16	Decel	15-0	8	7.81	-1.88	0.0173
17	Accel	0-45	22	28.85	2.05	0.1759
18	Decel	45-15	16	31.33	-1.88	0.1392
19	Accel	15-45	18	30.55	1.67	0.1528
20	Decel	45-0	19	24.72	-2.37	0.1304
21	Accel	0-60	25	38.28	2.40	0.2654
22	Decel	60-0	28	33.88	-2.14	0.2634
23	Accel	0-30	15	17.73	2.00	0.0737
24	Accel	30-60	25	45.14	1.20	0.3134
25	Decel	60-30	18	47.23	-1.67	0.2362
26	Decel	30-0	10	15.99	-3.00	0.0444
27	Accel	0-60	38	38.01	1.58	0.4009
28	Decel	60-0	35	33.87	-1.71	0.3293
29	Accel	0-30	18	17.73	1.67	0.0886
30	Accel	30-60	21	44.55	1.43	0.2599
31	Decel	60-30	14	46.63	-2.14	0.1813
32	Decel	30-0	13	16.40	-2.31	0.0592

FIGURE 2-14 SURVEILLANCE DRIVING SEQUENCE[1]

[1]Reprinted from EPA Report No. APTD-1497, March 1973

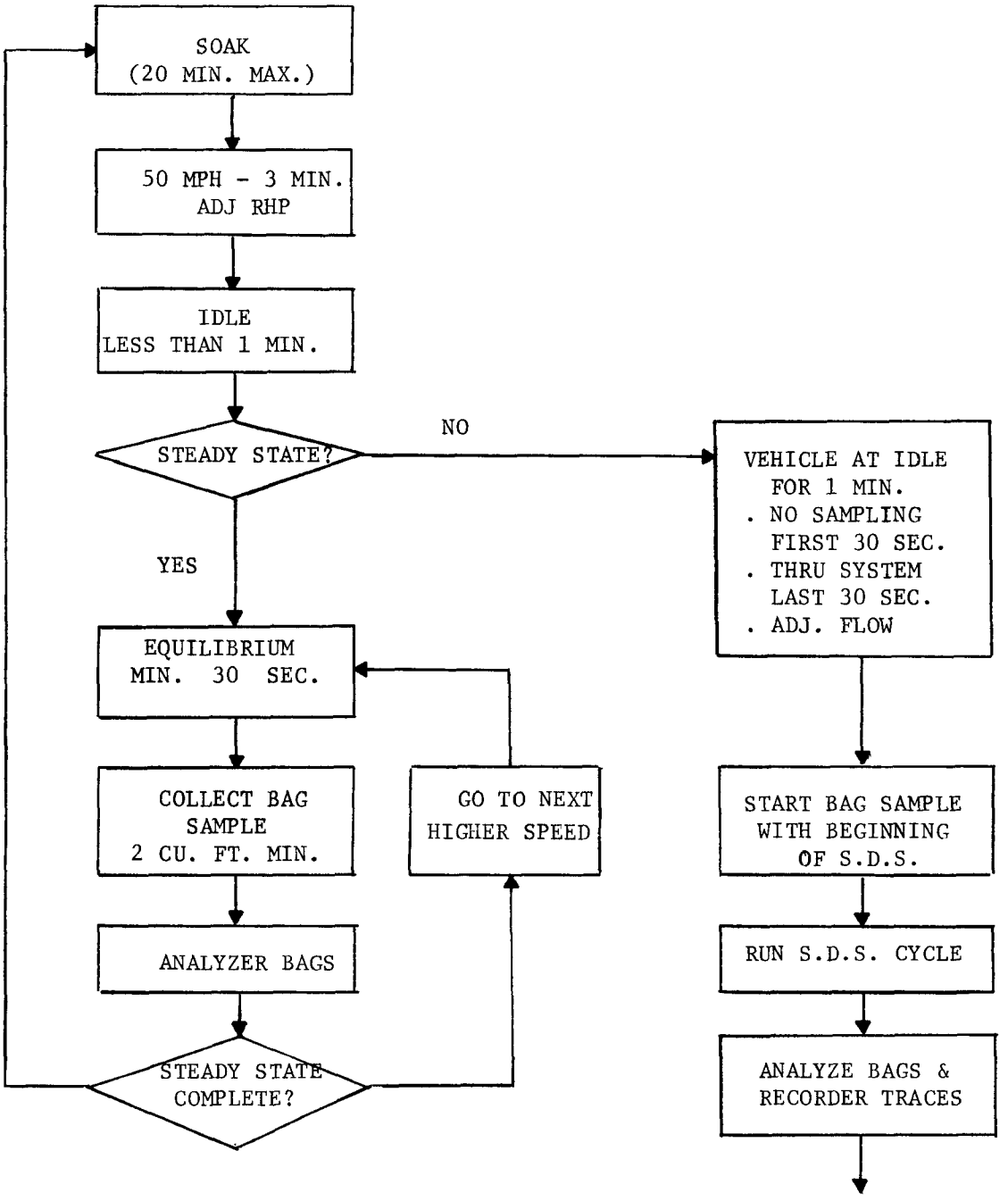

FIGURE 2-15 MODAL EMISSIONS TEST PROCEDURE

2.6.5 Aldehydes and Light Hydrocarbon Measurements

2.6.5.1 Aldehyde Measurements

The 3-methyl 2-benzothiazolinone hydrazone method (3 MBTH) was used. This is a sensitive colorimetric method for the determination of water soluble aliphatic aldehydes, measured as acetylaldehyde, in automotive exhaust. The aliphatic aldehydes react with 3 MBTH in the presence of ferric chloride to form a blue cationic dye which is read at 635 mu with a spectrophotometer.

Dilute auto exhaust was sampled directly from the CVS using fritted samplers. Prior to sampling, however, the sample probes and manifolds were heated to 150°C. Matched sample bubbles were placed into an ice bath and connected to the sample manifold. After the sample solutions were properly chilled the sampler vacuum pump was run to insure vacuum stability. At the start of the FTP cold test, the dilute auto exhaust was drawn through the chilled absorbing solution using bubbler traps connected to a manifold. At the end of the cold-transient portion of the cycle (505 seconds), the manifold directed the flow of exhaust sample to a second pair of bubblers. This was the start of the cold-stabilized portion of the cycle. After 867 seconds, the bubbles were removed and the same procedure followed for the hot test portion. After collection, the samplers were allowed to stand at room temperature for two hours to complete the reaction of the aldehydes with the 3 MBTH. Aliquots of the sampler were then oxidized with ferric chloride and diluted to a final volume with acetone and the absorbency measured.

2.6.5.2 Light Hydrocarbon Measurements

Samples of the auto exhaust were collected under controlled conditions during the basic FTP exhaust emission test. The sample was

drawn from the bag by a vacuum pump through an injection loop (IL) of the gas chromatograph (GC), see Figure 2-16. After the IL had been purged by the exhaust gas sample it was introduced into the analytical column of the GC. Simultaneously, the digital integrator was placed in the auto mode, preparing the system to record the presence of each component (methane, acetylene, ethylene, ethane and propane) separated from the exhaust gas. Following the initial surge the elution from the column occurred over a six minute interval. At the end of this period the GC programmer automatically increased the oven temperature to hasten the elution of long-chain hydrocarbons in order to prepare for the next analysis.

2.6.6 Daily Test Schedule

The daily test schedule was generated by the Fleet Control Administrator. Owners were contacted by phone and requested to have their cars at the laboratory at a specified time. A schedule clerk prepared a schedule envelope, Figure 2-17, on which the reporting date and time were indicated. All available vehicle information including the vehicle inspection checklist was imprinted on the envelope. All recorder tracings and test documents were placed in this envelope which became the vehicle file folder. Upon completion of testing for each vehicle the schedule envelope was returned to the clerk who checked the contents and removed each car tested from the needed vehicle list.

Normally, two eight-hour shifts were worked for the test phase. Cars were put into the soak area 12 hours prior to the commencement of each shift and removed from the laboratory area after testing.

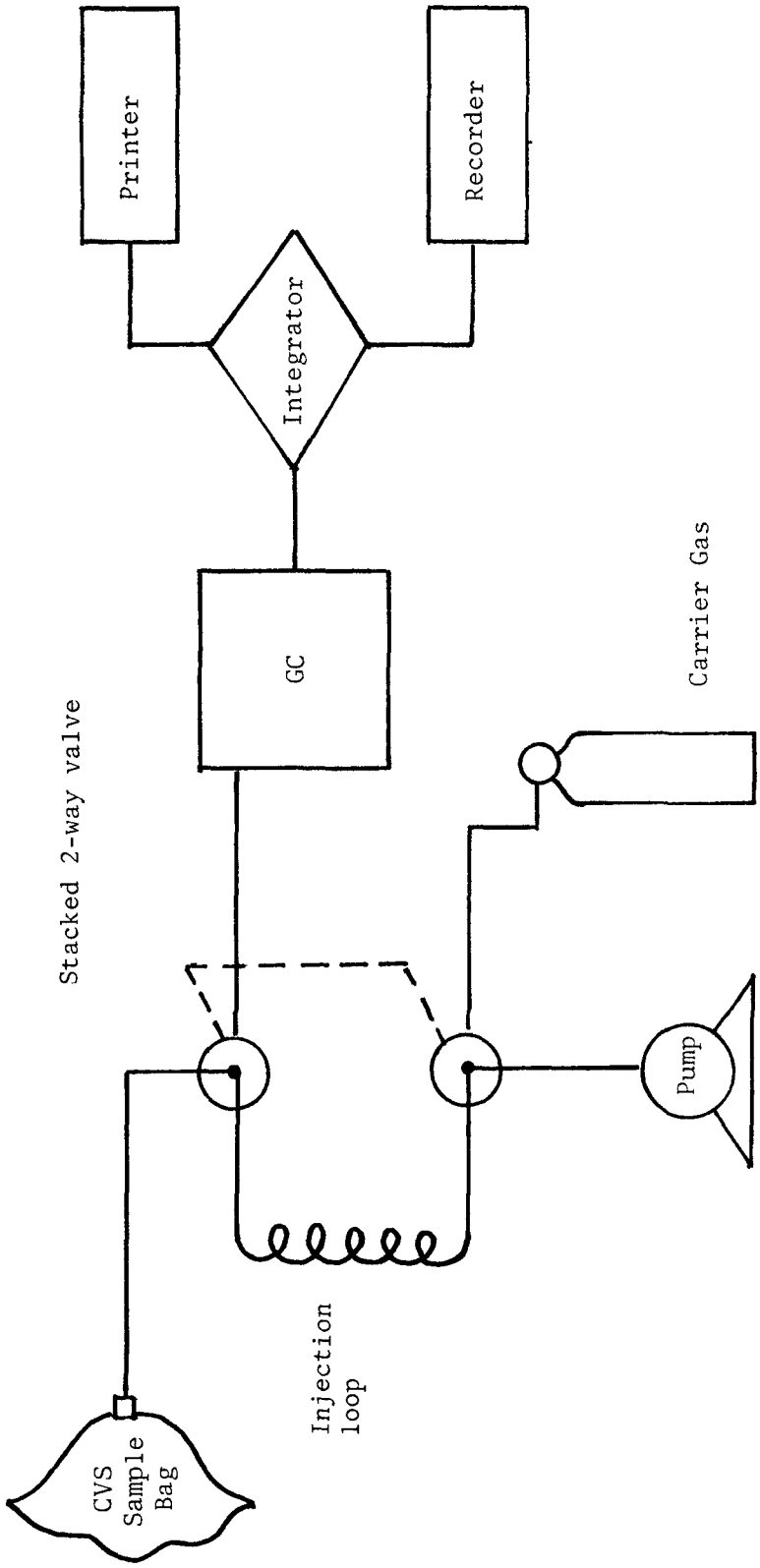

FIGURE 2-16 GC SYSTEM FOR LIGHT HYDROCARBON ANALYSIS

GENERAL ENVIRONMENTS CORPORATION
6840 INDUSTRIAL ROAD
SPRINGFIELD, VIRGINIA 22151

NAME_____ TEST DATE_____ CAR MANUFACTURER_____

VEHICLE NO._____ RUN NO._____ CAR MODEL_____

DESCRIPTION: 2 door ( )
4 door ( )
Convertible ( )
Station Wagon( )
Sedan ( )
Hardtop ( )

Air conditioned Yes ( ) No( )

Transmission
Standard 3 speed ( ) 4 speed( )
Automatic ( )

BOND INFORMATION

Name_____ SSN_____
Co-Maker_____
Beneficiary, POD_____
Address_____
_____

OWNER NEEDS

Directions ( ) Courtesy Car ( ) Automatic ( )
Standard ( )
Not needed ( )

TEST INFORMATION

Car to be delivered _____Date/time
Car to be picked up_____Date/time

INSPECTION

		Yes	No
1.	Engine size agrees with code	( )	( )
2.	Exhaust system in good shape	( )	( )
3.	Pollution systems appear intact	( )	( )
4.	Brakes operative	( )	( )
5.	Engine modified	( )	( )
6.	Transmission agrees with code	( )	( )
7.	No. of carburetor venturis agrees with code	( )	( )

Remarks_____
_____

_____
Signed

THIS ENVELOPE MUST CONTAIN:

( ) Computer data sheet
( ) Receipt acknowledge (2)
( ) CO-CO_2 recorder chart
( ) NOX-THC recorder chart
( ) CVS data sheet
( ) Driver schedule cold start
( ) Driver schedule hot start

FIGURE 2-17 SCHEDULE ENVELOPE

2.7 DATA HANDLING

2.7.1 Data Collection

All required data were collected in worksheet form prior to data review and final report tabulation. Initial vehicle data (i.e., vehicle weight, engine CID, transmission type, etc.) and CVS test data were recorded on the GEC Test Data Sheet, Figure 2-18. Upon completion of each test, analytical and vehicle data were entered on the Sixbag Test Computer Input Form, Figure 2-19, and the Highway Fuel Economy Worksheet, Figure 2-20. These two documents comprised the primary source of input for the computer data reduction.

2.7.2 Data Processing

The test envelope for each vehicle was delivered to a data clerk who checked each data input form for accuracy and completeness. The on-site computer was then employed to calculate the data required for reporting. The computer output provided data which was recorded in a "data book" which became the source document for keypunching. A separate "data book" was generated for each vehicle tested. These were later sent to a subcontractor for keypunching. Upon receipt at the subcontractor's facility the data was keypunched and key verified from this input provided by GEC. Each card set required in the contract scope of work for submission to EPA was generated and returned to GEC with the source documents. The punched cards were checked against the source documents and keypunch errors and errors of entry were coded for immediate correction. Upon completion of this review the punched cards were forwarded to EPA and the source documents placed in the test file. Errors attributable directly to the testing program were eliminated by retest of the vehicle.

GENERAL ENVIRONMENTS CORPORATION

LIGHT DUTY EMISSIONS DATA SHEET

VEHICLE NUMBER _____ DATE/TIME INTO SOAK _____
RUN NUMBER _____ DATE/TIME TESTED _____
CVS OPERATOR _____
ANALYSIS SYSTEM OPERATOR _____
TEST DRIVER _____

VEHICLE

MANUFACTURER _____ MODEL _____ YEAR _____
TRANSMISSION TYPE _____ NUMBER OF SPEEDS _____
ODOMETER READING _____ ENGINE DISPLACEMENT _____
FUEL TANK LOCATION _____ AIR COND. _____ DWELL _____
VEHICLE I.D. NUMBER _____ IDLE TIMING _____
IDLE R.P.M. _____ CARBURETOR VENTURIES _____
TYPES OF EMISSION CONTROLS _____
CONDITION OF PCV SYSTEM _____

DYNAMOMETER

MAKE _____ MODEL _____ SERIAL NO. _____
ACTUAL ROAD H.P. AT 50 M.P.H. _____ INDICATED ROADLOAD POWER
ABSORPTION AT 50 M.P.H. _____ DRIVE WHEEL TIRE PRESSURE _____
INERTIA _____

SAMPLING SYSTEM INFORMATION

SERIAL NO. _____ MODEL NO. _____ MANUFACTURER _____
TYPE _____

TEST	ΔP	INL DEP	REVS N	PUMP TEMP	BARO	GRAINS H2O	%H	AMB TEMP	BULB TEMP		FLOW SCFH	
									WET	DRY	SAMP	AIR
02T												
02S												
03T												
03S												
ECON												

IDEL CO LEVEL _____ IDLE HC LEVEL _____

FIGURE 2-18 LIGHT DUTY EMISSIONS TEST DATA SHEET

DATE:
CAR NO:
RUN NO:

SAMPLE BAG 1

DP	IN.DEP.	N	T	BAR	GR.H2O	RH

	HC	CO	CO2	NOX
DEFLECTIONS				
CURVE				

SAMPLE BAG 2

DP	IN.DEP.	N	T	BAR	GR.H2O	RH

	HC	CO	CO2	NOX
DEFLECTIONS				
CURVE				

SAMPLE BAG 3

DP	IN.DEP.	N	T	BAR	GR.H2O	RH

	HC	CO	CO2	NOX
DEFLECTIONS				
CURVE				

SAMPLE BAG 4

DP	IN.DEP.	N	T	BAR	GR.H2O	RH

	HC	CO	CO2	NOX
DEFLECTIONS				
CURVE				

AIRBAG 5

	HC	CO	CO2	NOX
DEFLECTIONS				
CURVE				

AIRBAG 6

	HC	CO	CO2	NOX
DEFLECTIONS				
CURVE				

FIGURE 2-19 SIX BAG TEST COMPUTER DATA FORM

DATE: _____ VEHICLE NO: _____ RUN NO: _____

HIGHWAY FUEL ECONOMY

Delta P _____
In. Dep. _____
Revs. _____
Pump T _____
Baro. _____
Grains H_2O _____

SAMPLE BAG

	HC	CO	CO_2	NOX
Deflection	_____	_____	_____	_____
Curve	_____	_____	_____	_____

AIR BAG

Deflection	_____	_____	_____	_____
Curve	_____	_____	_____	_____

FIGURE 2-20 HIGHWAY FUEL ECONOMY COMPUTER WORKSHEET

2.7.3 Calculations of Results

2.7.3.1 Exhaust Emissions

(1) Hydrocarbon Mass:

$$HCmass = Vmix \times DensityHC \times \frac{HCconc}{1,000,000}$$

(2) Carbon Monoxide Mass:

$$COmass = Vmix \times DesnityCO \times \frac{COconc}{100}$$

(3) Oxides of Nitrogen Mass:

$$NOXmass = Vmix \times DensityNO_2 \times \frac{NOXconc}{1,000,000}$$

Meaning of symbols:

HCmass = Hydrocarbon emissions, in grams per vehicle mile.

DensityHC = Density of hydrocarbons in the exhaust gas, assuming an average carbon to hydrogen ratio of 1:1.85, in grams per cubic foot at 68°F. and 760 mm Hg pressure (16.33 gm/cu ft).

HCconc = Hydrocarbon concentration of the dilute exhaust sample minus hydrocarbon concentration of the dilution air sample, in ppm carbon equivalent, i.e., equivalent propane X 3.

COmass = Carbon monoxide emissions, in grams per vehicle mile.

DensityCO = Density of carbon monoxide in grams per cubic foot at 68°F. and 760 mm Hg pressure (32.97 gm/cu ft).

COconc = Carbon monoxide concentration of the dilute exhaust sample minus the carbon monoxide concentration of the dilution air sample, in volume percent.

NOXmass = Oxides of nitrogen emissions, in grams per vehicle mile.

$DensityNO_2$ = Density of oxides of nitrogen in the exhaust gas, assuming they are in the form of nitrogen dioxide, in grams per cubic foot at 68°F. and 760 mmHg pressure (54.16 gm/cu ft).

NOXconc = Oxides of nitrogen concentration of the dilute exhaust sample minus the oxides of nitrogen concentration of the dilution air sample, in ppm.

Vmix = Total dilute exhaust volume in cubic feet per mile, corrected to standard conditions (528°R. and 760 mm Hg).

$$Vmix = K_1 \times V_0 \times N \times \frac{P_p}{T_p}$$

where: $K_1 = \frac{528°R}{760 \text{ mm Hg X } 7.5 \text{ miles}} = 0.09263$

V_0 = Volume of gas pumped by the positive displacement pump, in cubic feet per revolution. This volume is dependent on the pressure differential across the positive displacement pump.

N = Number of revolutions of the positive displacement pump during the test while samples are being collected.

P_p = Absolute pressure of the dilute exhaust entering the positive displacement pump, in mm Hg, i.e., barometric pressure minus the pressure depression below atmospheric of the mixture entering the positive displacement pump.

T_p = Average temperature of dilute exhaust entering positive displacement pump during test while samples are being collected, in degrees Rankin.

K_H = Humidity correction factor.

$$K_H = \frac{1}{1 - 0.0047\ (H - 75)}$$

where: H = Absolute humidity in grains of water per pound of dry air.

Example calculation of mass emission values:

Assume V_0 = 0.265 cu ft per revolution; N = 20,250 revolutions;

H = 85 grains per lb of dry air; P_p = 730 mm Hg; T_p = 550°R.;

HCconc = 160 ppm carbon equivalent; COconc = 0.09%; and NOX conc

= 70 ppm.

Then: Vmix = (0.09263) (0.265) (20,250) (730/550) = 659.8 cu ft per mile.

$$K_H = \frac{1}{1 - 0.0047\ (85 - 75)} = 1.049$$

(1) For a 1972 light-duty vehicle.

$$\text{HCmass} = 659.8 \text{ X } 16.33 \text{ X } \frac{160}{1{,}000{,}000} = 1.72 \text{ grams per vehicle mile}$$

$$\text{NOXmass} = 659.8 \text{ X } 54.16 \text{ X } \frac{70}{1{,}000{,}000} \text{ X } 1.049 = 2.62 \text{ grams per vehicle mile}$$

(2) For a 1972 utility vehicle.

$$\text{COmass} = 659.8 \text{ X } 32.97 \text{ X } \frac{0.09 \text{ X } 0.85}{100} = 16.6 \text{ grams per vehicle mile.}$$

36 Federal Register 128, 2 July 1971

Calculations for 1975 Light Duty Vehicles

(a) For light-duty vehicles:

$$Ywm = (0.43Yct + 0.57Yht + Ys)/7.5$$

where: Ywm = Weighted mass emissions of each pollutant, i.e., HC, CO, or NOX, in grams per vehicle mile.

Yct = Mass emissions as calculated from the "transient" phase of the cold start test, in grams per test phase.

Yht = Mass emissions as calculated from the "transient" phase of the hot start test, in grams per test phase.

Ys = Mass emissions as calculated from the "stabilized" phase of the cold start test, in grams per test phase.

The mass of each pollutant for each phase of both the cold start test and the hot start test is the same as defined in the 1972 Federal Test Procedure.

37 Federal Register 221, 15 November 1972

2.7.3.2 Modal Emissions

Values for each compound were calculated for each mode by the following method:

(1) $$\text{Avg. } R_{in} = \frac{\text{area of mode (in}^2)}{\text{mode base length (in)}}$$

and Avg. $R_{div} = R_{in}$ x divisions/inch

where R = recorder response

(2) Volume of mixture (V_{mix}) for each compound was calculated for each mode as follows:

$$V_{mix} = .6947368 \times N \times \text{Mode Seconds } \frac{(P_B - P_i)}{T_p} \times V_o$$

where N = pump revolutions/sec.

(3) Y_{conc} for each compound was calculated for each mode by the following method:

(3.1) $$Y = a(R_{div})^2 + b(R_{div})$$

where a and b are calibration curve coefficients

Then for HC and NOX

(3.2) $$Y_{conc} = V_{mix} \times \text{density} \times \frac{Y}{1{,}000{,}000}$$

For NOXC

(3.3) $$Y_{conc} = Y_{conc(NOX)} \times KH$$

For CO and CO_2

(3.4) $$Y_{conc} = V_{mix} \times \text{density} \times \frac{Y}{100}$$

Then

(3.5) $$Y_{gm/mile \text{ for mode}_i} = \frac{Y_{conc_i}}{\text{miles for mode}_i}$$

Values for HC, CO, CO_2, and NOXC were determined for a bagged sample collected during the Surveillance Driving Sequence and were compared to the combined steady state levels and mode values obtained from eq. (3.6) for each compound.

$$Z = \sum_{i=1}^{j=32} (Y_{gm/mile\ for\ mode_{i..j}} \times miles\ for\ mode_{i..j}) \tag{3.6}$$

where Z = total grams of compound for test

Finally, the average grams per mile for each compound was determined by dividing the total grams of compound by the miles traveled during all modes.

2.7.3.3 Fuel Economy

The Highway Fuel Economy in miles per gallon was calculated for each test vehicle by the following:

1. Calculation of total sample volume of the mixture

$$V_{mix} = V_o \times K_1 \times N \times \frac{P_p}{T_p}$$

where V_o = volume of gas pumped by the positive displacement pump in CFM

K_1 = Standard Temp x $\frac{1}{\text{Standard Pressure}}$

N = Revolutions of the pump during the test while samples are collected

P_p = Absolute Pressure of the dilute exhaust entering the pump in mmHg

T_p = Average temperature of dilute exhaust entering the pump in degrees Rankin

HC_{conc}, CO_{conc}, CO_2 conc, and NOX_{conc} were calculated as described in 2.7.3.1. Then the Highway Fuel Economy was calculated by:

$$MPG = \frac{2423}{0.866 \times \frac{HC\ grams}{10.242} + 0.429 \times \frac{CO\ grams}{10.242} + 0.273 \times \frac{CO_2\ grams}{10.242}}$$

where 10.242 = miles driven during test.

2.7.3.4 Aldehyde and Light Hydrocarbon Emissions

2.7.3.4.1 Aliphatic Aldehyde Emissions

The ppm aldehyde concentrations were determined by the following equation.

$$ppm = \frac{(TSA)(1/0.60 \times 22.4)}{SFR} \times \frac{1.2}{t_s} \times \frac{273}{T_s} \times \frac{P_s}{P}$$

where:

TSA = Total Sample Absorbence

TSA = TBA #1 + TBA #2

TSA = total sample absorbence

TBA = total bubbler absorbence

TBA = absorbency read per sample multiplied by the aliquot per sample

e.g. bubbler #1: 25 cc sample volume, 10 cc aliquot

TBA #1 = Abs x 2.5

bubbler #2: 25 cc sample volume, 10 cc aliquot

TBA #2 = Abs x 2.5

TSA = Abs #1 x 2.5 + Abs #2 x 2.5

SFR = sample flow rate

t_s = sample time

T_s = sample temperature °K

$P_s = P_B - P_i$

P = 760 mmHg

Final computation of grams per mile was accomplished as described in section 2.6.5.2.

2.7.3.4.2 Light Hydrocarbon Emissions

Hydrocarbon concentrations were calculated by the following equations:

(1) $$HC_{ppm} = \frac{C_s}{B}$$

where: C_s = sample counts from integrator

B = counts per part per million

then

(2) $$HC_{mass} = V_{mix} \times \text{Density} \times \frac{HC_{ppm} - air_{ppm}}{1{,}000{,}000}$$

Final gram per mile values for each light hydrocarbon was then calculated as described in section 2.6.5.2. Ethylene and acetylene were not separated by the GC column and are reported as C_2 unsaturates using ethylene density. The calculated light hydrocarbon densities were computed from values obtained from the Handbook of Chemistry and Physics, 46th Edition (1965-66).

Compound	Density @ 20°C & 760 mmHg
Methane	37.9435 gm/cu. ft.
Acetylene	61.1626 gm/cu. ft.
Ethylene (Ethene)	66.2596 gm/cu. ft.
Ethane	70.7901 gm/cu. ft.
Propane	103.637 gm/cu. ft.

SECTION 3

TEST RESULTS

3.1 DISCUSSION OF EXHAUST EMISSION AND FUEL ECONOMY RESULTS

3.1.1 Federal Test Procedure

A review of current vehicle emissions for model years 1967 through 1974 exhibits a continuing decrease in mass emission rates. When contrasted with current emission rates for 1967 model year vehicles, emission rates for 1974 model year vehicles were lower by 72 percent for HC, 73 percent for CO and 36 percent for NOXC.

Carbon dioxide emissions, while not considered a pollutant, were 29 percent greater.

Also, over the same period, fuel economy as determined by the carbon balance method from the Federal Test Procedure demonstrates a 7 percent lower fuel economy during the urban driving cycle. The current highway fuel economy remained at 20 miles per gallon for 1967 and 1974 model year vehicles.

Of all the vehicles tested, 21.7 percent were found to be in compliance with the 1972 Federal Emission Standards for HC and CO, 10 percent were in compliance with the 1973/1974 Federal Emission Standards for HC, CO and NOXC, while only one vehicle was able to meet the 1975 Federal Emission Standards.

During this program 36.7 percent of 1972 model year vehicles were in compliance with the 1972 Standards, 20 percent of the 1973 model year vehicles were in compliance with the 1973 Standards and 60 percent of the 1974 model year vehicles were in compliance with the 1974 Standards.

3.1.2 Modal Emissions

During the steady-state portion of the modal emissions test the highest average peak fuel economy occurred at the mph steady-state mode. Over the spread of the three model years tested (1972, 1973 and 1974) the current average emission rates for HC, CO, and NOXC as determined during the Surveillance Driving Sequence, were lower by 23 percent, 13 percent and 43 percent respectively. The calculated fuel economy was 12.5 percent lower during the same period while the CO_2 emission rate was 12 percent higher.

3.1.3 Aldehyde and Light Hydrocarbon Emissions

Light hydrocarbon emission rates for methane, ethane and C2 unsaturates (ethylene and acetylene) were 79 percent lower, 74 percent lower and 52 percent lower respectively for 1974 model year vehicle when compared to current 1972 model year vehicle emission rates.

Aliphatic aldehyde emissions were 37 percent lower during this same model year period.

3.2 DISCUSSION OF NEW JERSEY TESTING

Vehicles registered in New Jersey were required to meet the following exhaust emission standards:

Vehicle Model Year	Carbon Monoxide %	Hydrocarbon (ppm)
1967 and older	10.0	1600
1968 and 1969	8.0	800
1970 through 1974	6.0	600

Undiluted measurements are made with a portable garage-type tester with the vehicle at idle.

The use of a postage reply card for New Jersey inspection stations to report emission levels observed during the state inspection failed to provide complete and consistent data with which to adequately evaluate the New Jersey inspection program. Of the cars tested by GEC which subsequently underwent state inspection, 54 percent failed to meet the HC or CO state standard, or both. Of the vehicles which subsequently failed the state inspection, 75 percent did not return for additional testing by GEC.

SECTION 4

ACKNOWLEDGMENTS

The support of this program by the EPA, Division of Certification and Surveillance, is acknowledged. A very special acknowledgment to Mr. Charles Domke, Mr. John White, III, EPA Project Officer, and Messrs. Fred Dindoffer, Matt Macocha, Tom Bejma and John Shelton for their prompt and courteous assistance.

INDEX OF TABLES

Table No.	Title
1	Summary of Vehicle Makes
2	Summary of Test Vehicle Characteristics by Model Year
3	Exhaust Emissions Test Results Vs. Model Year
4	Vehicles Meeting Federal Standards
5	1972 Vehicles Meeting 1972 Federal Standards
6	1973 Vehicles Meeting 1973 Federal Standards
7	1974 Vehicles Meeting 1974 Federal Standards
8	Summary of Modal Emission Results on Thirty 1972 Model Year Vehicles
9	Summary of Modal Emission Results on Thirty-five 1973 Model Year Vehicles
10	Summary of Modal Emission Results on Ten 1974 Model Year Vehicles
11	Light Hydrocarbon Exhaust Emission Test Results Vs. Model Year
12	Results of New Jersey State Inspection

TABLE 1

SUMMARY OF VEHICLE MAKES

NEWARK, N.J.

	1967	1968	1969	1970	1971	1972	1973	1974	TOTALS
AMC	1	1	1	0	1	0	1	0	5
BUICK	1	1	1	1	2	2	2	1	11
CADILLAC	1	1	0	0	1	0	1	0	4
CAPRI	0	0	0	0	0	0	1	0	1
CHEVROLET	4	5	6	6	6	7	8	2	44
CHRYSLER	1	0	1	0	1	0	1	0	4
DATSUN	0	0	0	0	0	1	1	0	2
DODGE	1	1	1	1	0	2	2	1	9
FORD	3	4	5	5	6	6	7	2	38
LINCOLN	0	0	0	0	0	1	0	0	1
MAZDA	0	0	0	0	0	0	1	0	1
MERCURY	1	1	1	1	1	1	1	0	7
OLDSMOBILE	1	1	1	2	2	2	2	1	12
OPEL	0	0	0	0	0	1	0	0	1
PLYMOUTH	1	1	1	2	2	2	2	1	12
PONTIAC	1	1	2	2	3	2	2	1	14
TOYOTA	0	0	0	1	1	1	1	0	4
VOLKSWAGEN	1	1	1	1	1	2	2	1	10
	---	---	---	---	---	---	---	---	---
TOTALS	17	18	21	22	27	30	35	10	180

TABLE 2

SUMMARY OF TEST VEHICLE CHARACTERISTICS
BY MODEL YEAR

NEWARK, N.J.

	1967	1968	1969	1970	1971	1972	1973	1974	TOTALS
INERTIA WEIGHTS (LBS)									
1750	0	0	0	0	0	0	0	0	0
2000	1	0	1	2	1	0	2	1	8
2250	0	1	0	0	2	4	1	0	8
2500	0	0	0	0	2	3	5	0	10
2750	0	0	0	1	1	1	1	0	4
3000	1	1	2	0	1	1	3	1	10
3500	5	6	5	5	4	3	3	2	33
4000	8	8	10	8	6	6	8	3	57
4500	1	1	3	6	6	8	8	2	35
5000	1	1	0	0	4	3	3	1	13
5500	0	0	0	0	0	1	1	0	2
ENGINE DISPLACEMENT (CUBIC INCHES)									
UNDER 251	4	2	3	4	7	9	12	3	44
251-330	7	9	7	4	5	5	4	0	41
331-399	4	5	9	9	8	10	12	5	62
OVER 399	2	2	2	5	7	6	7	2	33
NUMBER OF ENGINE CYLINDERS									
4	1	1	1	2	5	8	8	1	27
6	4	1	2	2	2	1	4	2	18
8	12	16	18	18	20	21	22	7	134
ROTARY	0	0	0	0	0	0	1	0	1
	---	---	---	---	---	---	---	---	---
TOTALS	17	18	21	22	27	30	35	10	180

TABLE 3

EXHAUST EMISSION TEST RESULTS VS. MODEL YEAR

NEWARK, N.J.

1972 FEDERAL TEST PROCEDURE

	N	AVERAGE MILEAGE	HC MEAN	HC S.D.	CO MEAN	CO S.D.	CO2 MEAN	CO2 S.D.	NOXC MEAN	NOXC S.D.	*--------FUEL ECONOMY--------* FTP HMEAN	FTP HS.D.	HFET HMEAN	HFET HS.D.
1967	17	62848	9.99	9.91	106.48	48.31	480.39	112.45	3.40	1.45	13.06	2.90	20.01	5.86
1968	18	62102	5.81	2.18	75.55	28.26	520.31	118.45	4.12	.98	13.50	2.47	22.05	4.37
1969	21	53599	8.55	8.85	80.96	39.32	523.85	98.08	4.38	1.50	13.09	2.30	20.70	3.87
1970	22	45305	6.99	3.45	79.98	37.26	556.51	139.53	3.60	1.27	12.60	2.79	20.63	4.57
1971	27	33973	5.25	4.65	48.71	26.48	582.52	180.94	3.90	1.13	13.08	3.66	20.78	5.74
1972	30	26086	3.55	1.64	52.26	41.65	581.82	163.76	3.88	1.30	13.14	3.42	22.43	5.52
1973	35	18215	3.50	2.06	43.53	38.10	601.11	179.27	2.86	.95	13.04	3.63	21.51	6.66
1974	10	6301	2.76	.92	29.15	20.64	675.05	177.73	2.16	.55	12.16	3.03	19.99	4.62
TOTALS	180	37272	5.59	4.88	62.93	41.92	565.27	150.38	3.59	1.17	13.01	3.11	21.14	5.31

1975 FEDERAL TEST PROCEDURE

	N	AVERAGE MILEAGE	HC MEAN	HC S.D.	CO MEAN	CO .D.	CO2 MEAN	CO2 S.D.	NOXC MEAN	NOXC S.D.	*--------FUEL ECONOMY--------* FTP HMEAN	FTP HS.D.	HFET HMEAN	HFET HS.D.
1967	17	62848	9.10	9.71	95.04	46.35	466.01	107.91	3.50	1.56	13.78	3.03	20.01	5.86
1968	18	62102	5.21	2.21	61.25	21.20	506.13	107.32	4.33	1.04	14.34	2.47	22.05	4.37
1969	21	53599	7.77	8.49	64.69	29.51	510.72	92.56	4.60	1.49	13.93	2.39	20.70	3.87
1970	22	45305	5.43	1.84	63.65	31.29	546.84	136.12	3.66	1.28	13.36	3.04	20.63	4.57
1971	27	33973	4.63	3.75	39.59	23.50	569.99	173.46	4.03	1.33	13.70	3.75	20.78	5.74
1972	30	26086	3.17	1.47	43.48	37.38	558.71	153.31	3.79	1.30	13.93	3.59	22.43	5.52
1973	35	18215	3.09	1.84	36.95	35.66	578.29	173.72	2.82	.89	13.74	3.86	21.51	6.66
1974	10	6301	2.53	.70	24.71	18.65	651.06	169.29	2.16	.61	12.72	3.15	19.99	4.62
TOTALS	180	37272	4.91	4.52	52.18	36.80	548.28	143.58	3.65	1.21	13.74	3.27	21.14	5.31

EMISSION RESULTS EXPRESSED IN GRAMS/MILE - FUEL ECONOMY IN MILES/GALLON

TABLE 4

VEHICLES MEETING FEDERAL STANDARDS

NEWARK, N.J.

1972 FEDERAL STANDARDS

		HC ≤3.4 GM/MI		CO ≤39 GM/MI		PASSED BOTH	
	N	NO.	PCT.	NO.	PCT.	NO.	PCT.
1967	17	0	0.00	1	5.88	0	0.00
1968	18	1	5.56	2	11.11	1	5.56
1969	21	0	0.00	3	14.29	0	0.00
1970	22	1	4.55	2	9.09	0	0.00
1971	27	11	40.74	11	40.74	7	25.93
1972	30	16	53.33	15	50.00	11	36.67
1973	35	24	68.57	19	54.29	14	40.00
1974	10	6	60.00	8	80.00	6	60.00
	---	---	-------	---	-------	---	-------
TOTALS	180	59	32.78	61	33.89	39	21.67

1973/1974 FEDERAL STANDARDS

		HC ≤3.4 GM/MI		CO ≤39 GM/MI		NOXC ≤3.0 GM/MI		PASSED ALL THREE	
	N	NO.	PCT.	NO.	PCT.	NO.	PCT.	NO.	PCT.
1967	17	0	0.00	1	5.88	9	52.94	0	0.00
1968	18	1	5.56	2	11.11	1	5.56	0	0.00
1969	21	0	0.00	3	14.29	5	23.81	0	0.00
1970	22	1	4.55	2	9.09	6	27.27	0	0.00
1971	27	11	40.74	11	40.74	8	29.63	1	3.70
1972	30	16	53.33	15	50.00	8	26.67	3	10.00
1973	35	24	68.57	19	54.29	21	60.00	8	22.86
1974	10	6	60.00	8	80.00	9	90.00	6	60.00
	---	---	-------	---	-------	---	-------	---	-------
TOTALS	180	59	32.78	61	33.89	67	37.22	18	10.00

TABLE 4 (CONTINUED)

VEHICLES MEETING FEDERAL STANDARDS

NEWARK, N.J.

1975 FEDERAL STANDARDS

		HC ≤1.5 GM/MI		CO ≤15 GM/MI		NOXC ≤3.1 GM/MI		PASSED ALL THREE	
	N	NO.	PCT.	NO.	PCT.	NO.	PCT	NO.	PCT.
1967	17	0	0.00	0	0.00	9	52.94	0	0.00
1968	18	0	0.00	1	5.56	1	5.56	0	0.00
1969	21	0	0.00	1	4.76	3	14.29	0	0.00
1970	22	0	0.00	0	0.00	8	36.36	0	0.00
1971	27	1	3.70	3	11.11	8	29.63	0	0.00
1972	30	1	3.33	4	13.33	11	36.67	0	0.00
1973	35	1	2.86	6	17.14	23	65.71	1	2.86
1974	10	1	10.00	4	40.00	9	90.00	0	0.00
	---	---	-------	---	-------	---	-------	---	-------
TOTALS	180	4	2.22	19	10.56	72	40.00	1	.56

TABLE 5

1972 VEHICLES MEETING 1972 FEDERAL STANDARDS

NEWARK, N.J.

1972 FEDERAL TEST PROCEDURE

		HC ≤3.4 GM/MI		CO ≤39 GM/MI		PASSED BOTH	
	N	NO.	PCT.	NO.	PCT.	NO.	PCT.
BUICK	2	1	50.00	0	0.00	0	0.00
CHEVROLET	7	4	57.14	5	71.43	3	42.86
DATSUN	1	1	100.00	1	100.00	1	100.00
DODGE	2	0	0.00	1	50.00	0	0.00
FORD	6	4	66.67	2	33.33	2	33.33
LINCOLN	1	0	0.00	0	0.00	0	0.00
MERCURY	1	0	0.00	0	0.00	0	0.00
OLDSMOBILE	2	2	100.00	1	50.00	1	50.00
OPEL	1	1	100.00	1	100.00	1	100.00
PLYMOUTH	2	0	0.00	1	50.00	0	0.00
PONTIAC	2	1	50.00	1	50.00	1	50.00
TOYOTA	1	1	100.00	1	100.00	1	100.00
VOLKSWAGEN	2	1	50.00	1	50.00	1	50.00
TOTALS	30	16	53.33	15	50.00	11	36.67

TABLE 6

1973 VEHICLES MEETING 1973 STANDARDS

NEWARK, N.J.

1973 FEDERAL TEST PROCEDURE

		HC ≤3.4 GM/MI		CO ≤39 GM/MI		NOXC ≤3.0 GM/MI		PASSED ALL THREE	
	N	NO.	PCT.	NO.	PCT.	NO.	PCT.	NO.	PCT.
AMC	1	0	0.00	1	100.00	0	0.00	0	0.00
BUICK	2	2	100.00	1	50.00	2	100.00	1	50.00
CADILLAC	1	0	0.00	0	0.00	0	0.00	0	0.00
CAPRI	1	1	100.00	1	100.00	0	0.00	0	0.00
CHEVROLET	8	6	75.00	5	62.50	7	87.50	2	25.00
CHRYSLER	1	0	0.00	0	0.00	0	0.00	0	0.00
DATSUN	1	1	100.00	1	100.00	1	100.00	1	100.00
DODGE	2	2	100.00	0	0.00	0	0.00	0	0.00
FORD	7	3	42.86	2	28.57	3	42.86	1	14.29
MAZDA	1	0	0.00	0	0.00	1	100.00	0	0.00
MERCURY	1	1	100.00	0	0.00	1	100.00	0	0.00
OLDSMOBILE	2	2	100.00	2	100.00	0	0.00	0	0.00
PLYMOUTH	2	2	100.00	2	100.00	1	50.00	1	50.00
PONTIAC	2	0	0.00	2	100.00	1	50.00	0	0.00
TOYOTA	1	1	100.00	1	100.00	0	0.00	0	0.00
VOLKSWAGEN	2	1	50.00	1	50.00	2	100.00	1	50.00
	---	---	-------	---	-------	---	-------	---	-------
TOTALS	35	22	62.86	19	54.29	19	54.29	7	20.00

TABLE 7

1974 VEHICLES MEETING 1974 STANDARDS

NEWARK, N.J.

1974 FEDERAL TEST PROCEDURE

		HC ≤3.4 GM/MI		CO ≤39 GM/MI		NOXC ≤3.0 GM/MI		PASSED ALL THREE	
	N	NO.	PCT.	NO.	PCT.	NO.	PCT.	NO.	PCT.
BUICK	1	1	100.00	1	100.00	1	100.00	1	100.00
CHEVROLET	2	2	100.00	2	100.00	2	100.00	2	100.00
DODGE	1	1	100.00	1	100.00	1	100.00	1	100.00
FORD	2	1	50.00	2	100.00	2	100.00	1	50.00
OLDSMOBILE	1	1	100.00	1	100.00	1	100.00	1	100.00
PLYMOUTH	1	0	0.00	0	0.00	1	100.00	0	0.00
PONTIAC	1	0	0.00	0	0.00	0	0.00	0	0.00
VOLKSWAGEN	1	0	0.00	1	100.00	1	100.00	0	0.00
	---	---	-------	---	-------	---	-------	---	-------
TOTALS	10	6	60.00	8	80.00	9	90.00	6	60.00

TABLE 8

SUMMARY OF MODAL EMISSION RESULTS ON
THIRTY 1972 MODEL-YEAR VEHICLES

MODE NUMBER	FROM-TO (MPH)	DISTANCE (MILES)	TIME IN MODE (SEC)	HC	CO	CO2	NOXC	FUEL ECONOMY
1	00-30	.0602	12	4.74	58.62	948.28	8.23	9.97
2	30-00	.0741	16	2.92	29.75	414.93	1.31	21.59
3	00-15	.0201	8	6.59	103.27	1019.77	5.17	9.00
4	15-30	.0705	11	3.12	32.85	721.70	5.39	12.79
5	30-45	.1369	13	2.31	17.02	598.25	6.18	16.12
6	45-30	.1268	12	1.72	9.49	261.71	1.87	35.71
7	30-60	.2163	17	3.37	40.59	707.05	8.18	13.36
8	60-45	.1716	12	1.73	9.91	256.76	2.76	38.48
9	45-60	.2043	14	2.40	14.09	583.22	8.04	16.97
10	60-15	.3367	30	3.18	14.06	241.84	2.10	38.52
11	15-60	.3136	26	3.57	42.61	755.53	9.18	12.50
12	60-00	.1973	21	4.29	16.33	279.32	2.48	32.99
13	00-60	.3313	32	3.66	32.96	802.42	9.85	11.79
14	60-30	.2994	23	2.84	11.90	225.86	2.16	40.55
15	30-15	.0579	9	2.20	19.30	340.82	1.39	28.52
16	15-00	.0173	8	5.46	61.15	852.65	2.37	11.66
17	00-45	.1759	22	4.35	36.22	806.71	8.10	11.70
18	45-15	.1392	16	2.55	12.36	265.22	1.70	36.88
19	15-45	.1528	18	3.18	29.46	760.09	7.09	13.02
20	45-00	.1304	19	3.45	17.91	319.64	1.73	29.24
21	00-60	.2654	25	4.55	64.28	865.99	9.08	10.51
22	60-00	.2634	28	6.46	16.20	271.28	2.04	33.64
23	00-30	.0737	15	4.96	49.85	880.10	6.34	10.63
24	30-60	.3134	25	2.64	21.10	652.18	7.62	14.61
25	60-30	.2362	18	2.84	10.10	224.67	1.94	41.85
26	30-00	.0444	10	3.12	22.55	456.27	1.68	21.67
27	00-60	.4009	38	3.07	24.40	715.34	8.42	13.42
28	60-00	.3293	35	3.38	16.06	258.10	1.77	35.02
29	00-30	.0886	18	4.28	44.83	842.30	5.15	11.01
30	30-60	.2599	21	2.83	25.34	678.94	7.09	14.11
31	60-30	.1813	14	2.73	9.93	236.43	2.44	38.68
32	30-00	.0592	13	3.43	27.04	431.19	3.80	22.51
TOTAL CALCULATED RESULTS				3.02	25.91	575.11	5.46	15.68
BAG RESULTS				3.47	31.41	583.46	5.94	15.35
33	IDLE			.60	13.78	78.80	.07	106.43
34	5 MPH STEADY STATE			6.06	138.94	985.20	.62	11.13
35	10 MPH STEADY STATE			2.52	56.81	679.43	.64	12.56
36	15 MPH STEADY STATE			1.56	29.74	534.35	.93	16.27
37	30 MPH STEADY STATE			1.23	11.96	356.57	1.67	24.51
38	45 MPH STEADY STATE			1.22	7.95	346.04	3.30	26.32
39	60 MPH STEADY STATE			1.20	9.21	376.41	4.92	24.54

RESULTS EXPRESSED IN GRAMS/MILE - GRAMS/MINUTE FOR ZERO MPH

TABLE 9

SUMMARY OF MODAL EMISSION RESULTS ON
THIRTY-FIVE 1973 MODEL-YEAR VEHICLES

MODE NUMBER	FROM-TO (MPH)	DISTANCE (MILES)	TIME IN MODE (SEC)	HC	CO	CO2	NOXC	FUEL ECONOMY
1	00-30	.0602	12	4.70	44.94	957.38	6.75	10.60
2	30-00	.0741	16	2.37	19.07	444.28	1.20	21.23
3	00-15	.0201	8	6.18	71.82	1054.23	2.99	8.52
4	15-30	.0705	11	2.64	26.77	707.19	3.72	12.88
5	30-45	.1360	13	2.21	12.08	567.29	5.05	16.27
6	45-30	.1268	12	1.91	7.01	267.13	1.73	36.27
7	30-60	.2163	17	3.17	47.90	730.14	7.06	12.67
8	60-45	.1716	12	1.88	11.81	285.19	2.50	33.93
9	45-60	.2043	14	2.04	15.13	581.77	6.59	18.17
10	60-15	.3367	30	2.44	10.56	273.81	1.27	35.04
11	15-60	.3136	26	3.06	50.55	749.75	7.44	12.01
12	60-00	.1973	21	3.79	12.03	319.31	1.79	30.76
13	00-60	.3313	32	3.31	43.06	884.98	8.01	11.23
14	60-30	.2994	23	2.50	8.29	240.69	1.29	39.78
15	30-15	.0579	9	1.69	13.12	348.02	.84	28.06
16	15-00	.0173	8	4.29	58.33	907.57	2.07	12.03
17	00-45	.1759	22	3.48	30.50	784.56	7.31	12.63
18	45-15	.1392	16	2.14	8.77	309.35	1.26	33.03
19	15-45	.1528	18	2.89	26.50	724.73	6.31	14.02
20	45-00	.1304	19	2.45	11.10	344.17	1.18	29.14
21	00-60	.2654	25	4.33	71.25	837.69	8.06	10.36
22	60-00	.2634	28	3.22	10.68	292.86	1.72	32.46
23	00-30	.0737	15	3.97	31.48	856.80	5.58	10.80
24	30-60	.3134	25	2.35	20.76	636.49	6.57	14.40
25	60-30	.2362	18	2.82	8.02	241.92	1.52	39.54
26	30-00	.0444	10	2.78	17.45	496.27	1.67	21.06
27	00-60	.4009	38	2.72	23.80	720.03	7.63	13.08
28	60-00	.3293	35	2.79	10.81	283.30	1.35	35.05
29	00-30	.0886	18	3.50	30.71	814.93	5.05	11.27
30	30-60	.2599	21	2.83	29.40	667.04	7.24	13.64
31	60-30	.1813	14	2.80	7.80	242.85	2.33	39.36
32	30-00	.0592	13	2.32	15.21	434.35	1.86	24.40
TOTAL CALCULATED RESULTS				2.65	21.95	591.91	4.45	15.60
BAG RESULTS				2.90	27.52	601.37	4.77	14.92
33	IDLE			.57	9.21	93.56	.15	108.99
34	5 MPH STEADY STATE			6.18	100.63	1081.71	.85	7.71
35	10 MPH STEADY STATE			2.84	45.80	666.98	.61	12.34
36	15 MPH STEADY STATE			1.96	24.54	528.34	.73	16.43
37	30 MPH STEADY STATE			1.29	8.92	375.19	1.33	23.65
38	45 MPH STEADY STATE			.96	5.53	365.48	2.39	25.33
39	60 MPH STEADY STATE			.96	7.38	403.05	3.79	24.00

RESULTS EXPRESSED IN GRAMS/MILE - GRAMS/MINUTE FOR ZERO MPH

TABLE 10

SUMMARY OF MODAL EMISSION RESULTS ON
TEN 1974 MODEL-YEAR VEHICLES

MODE NUMBER	FROM-TO (MPH)	DISTANCE (MILES)	TIME IN MODE (SEC)	HC	CO	CO2	NOXC	FUEL ECONOMY
1	00-30	.0602	12	3.44	34.55	1054.44	4.03	8.46
2	30-00	.0741	16	1.93	19.65	521.67	1.18	19.14
3	00-15	.0261	8	3.69	41.74	1157.25	3.31	7.97
4	15-30	.0705	11	1.99	29.06	777.89	2.54	11.34
5	30-45	.1366	13	1.67	12.41	632.29	2.93	14.41
6	45-30	.1268	12	1.67	6.53	276.18	1.44	33.76
7	30-60	.2163	17	3.13	66.98	751.12	4.05	11.16
8	60-45	.1716	12	1.58	7.14	331.30	1.66	29.21
9	45-60	.2043	14	1.65	13.07	644.46	3.96	14.39
10	60-15	.3367	30	2.65	9.60	271.08	1.17	33.34
11	15-60	.3136	26	2.79	54.29	733.43	4.78	12.65
12	60-00	.1973	21	3.43	10.00	330.75	1.53	29.02
13	00-60	.3313	32	2.91	41.28	856.81	5.43	10.47
14	60-30	.2994	23	2.50	7.68	250.44	1.30	37.06
15	30-15	.0579	9	1.38	11.83	334.44	1.09	30.70
16	15-00	.0173	8	3.30	36.79	938.30	2.59	11.03
17	00-45	.1759	22	2.82	23.06	820.70	4.46	13.06
18	45-15	.1392	16	2.52	9.19	282.59	1.44	32.99
19	15-45	.1528	18	2.28	27.74	800.12	3.85	11.52
20	45-00	.1304	19	2.88	13.09	338.99	1.54	27.86
21	00-60	.2654	25	3.61	88.98	895.65	4.35	9.21
22	60-00	.2634	28	3.04	10.86	284.16	1.23	32.88
23	00-30	.0737	15	3.88	31.87	988.78	3.09	9.17
24	30-60	.3134	25	1.90	19.52	684.22	4.16	13.15
25	60-30	.2362	18	2.49	7.05	238.78	1.31	38.95
26	30-00	.0444	10	2.10	15.49	521.91	2.35	18.65
27	00-60	.4009	38	2.19	17.20	760.58	4.81	12.04
28	60-00	.3293	35	2.47	9.86	279.27	1.00	33.10
29	00-30	.0886	18	2.72	22.31	911.12	2.84	9.80
30	30-60	.2599	21	2.50	36.06	728.38	4.52	11.88
31	60-30	.1813	14	2.83	8.48	238.55	1.68	37.97
32	30-00	.0592	13	2.07	17.00	486.92	1.42	21.19
TOTAL CALCULATED RESULTS				2.38	21.27	631.14	3.09	14.00
BAG RESULTS				2.66	27.38	653.09	3.37	13.43
33	IDLE			.41	5.94	98.63	.11	97.52
34	5 MPH STEADY STATE			4.52	59.23	1215.35	2.06	7.70
35	10 MPH STEADY STATE			1.91	27.70	771.30	.84	11.55
36	15 MPH STEADY STATE			1.20	18.33	574.20	.77	15.28
37	30 MPH STEADY STATE			1.13	9.03	413.82	1.45	21.31
38	45 MPH STEADY STATE			.92	3.51	399.32	2.10	22.87
39	60 MPH STEADY STATE			.96	4.15	431.77	2.80	21.41

RESULTS EXPRESSED IN GRAMS/MILE - GRAMS/MINUTE FOR ZERO MPH

TABLE 11

EXHAUST EMISSION TEST RESULTS VS. MODEL YEAR

NEWARK, N.J.

1972 FEDERAL TEST PROCEDURE

	N	AVERAGE MILEAGE	METHANE MEAN	METHANE S.D.	ETHANE MEAN	ETHANE S.D.	C2 UNSATURATES (ETHYLENE + ACETYLENE) MEAN	C2 UNSATURATES S.D.	PROPANE MEAN	PROPANE S.D.	ALIPHATIC ALDEHYDES MEAN	ALIPHATIC ALDEHYDES S.D.
1967	17	62848	.29	.16	.23	.16	.52	.24	0.00	0.00	.27	.13
1968	18	62102	.17	.11	.12	.06	.33	.11	0.00	0.00	.29	.09
1969	21	53599	.17	.14	.14	.11	.34	.19	0.00	0.00	.27	.12
1970	22	45305	.20	.13	.16	.11	.41	.23	0.00	0.00	.24	.09
1971	27	33973	.10	.07	.10	.08	.29	.25	0.00	0.00	.26	.11
1972	30	26086	.11	.12	.09	.05	.37	.25	0.00	0.00	.25	.08
1973	35	18215	.08	.07	.07	.03	.30	.14	0.00	0.00	.26	.12
1974	10	6301	.06	.03	.06	.02	.25	.07	0.00	0.00	.17	.13
TOTALS	180	37272	.14	.11	.12	.08	.35	.20	0.00	0.00	.26	.11

1975 FEDERAL TEST PROCEDURE

	N	AVERAGE MILEAGE	METHANE MEAN	METHANE S.D.	ETHANE MEAN	ETHANE S.D.	C2 UNSATURATES (ETHYLENE + ACETYLENE) MEAN	C2 UNSATURATES S.D.	PROPANE MEAN	PROPANE S.D.	ALIPHATIC ALDEHYDES MEAN	ALIPHATIC ALDEHYDES S.D.
1967	17	62848	.26	.15	.22	.15	.48	.23	0.00	0.00	.26	.12
1968	18	62102	.15	.10	.11	.07	.31	.11	0.00	0.00	.29	.09
1969	21	53599	.14	.10	.12	.08	.30	.13	0.00	0.00	.27	.12
1970	22	45305	.15	.09	.13	.06	.34	.19	0.00	0.00	.24	.08
1971	27	33973	.08	.05	.08	.05	.25	.14	0.00	0.00	.26	.10
1972	30	26086	.10	.11	.08	.05	.34	.24	0.00	0.00	.25	.08
1973	35	18215	.08	.07	.06	.03	.27	.13	0.00	0.00	.26	.12
1974	10	6301	.05	.03	.05	.02	.22	.06	0.00	0.00	.16	.13
TOTALS	180	37272	.12	.09	.10	.07	.31	.16	0.00	0.00	.26	.10

NOTE: MEAN AND S.D. VALUES ADJUSTED TO VEHICLES ACTUALLY TESTED FOR LIGHT HYDROCARBONS AND ALDEHYDES

RESULTS OF NEW JERSEY STATE INSPECTION

VEH NO.	MODEL YEAR	MAKE	RETRANSLATION TEST 1972 FEDERAL TEST PROCEDURE HC	CO	CO2	NOXC	IDLE TEST IHC	IDLE TEST ICO	NEW JERSEY INSPECTION IHC	NEW JERSEY INSPECTION ICO	POSTINSPECTION RETEST 1972 FEDERAL TEST PROCEDURE HC	CO	CO2	NOXC	IDLE TEST IHC	IDLE TEST ICO
12	1973	BUIC	3.35	41.43	638.56	3.65	440	2.40	F*	F*						
													**			
26	1973	[illegible]	3.37	79.83	421.24	3.57	130	3.00	125P	6.00F						
									0P	.05P	2.09	9.55	472.65	4.42	200	.20
31	1973	FORD	3.43	64.01	621.48	3.02	200	3.50	100P	4.00P						
37	1973	OLDS	3.22	15.15	724.21	3.27	100	.25	F*	F*						
													**			
42	1973	PONT	3.41	30.57	753.96	3.15	850	.25	200P	.20P						
43	1973	TOYO	1.63	39.33	363.67	3.77	260	6.20	F*	F*						
59	1972	FORD	5.38	114.32	540.83	1.71	280	5.40	200P	6.00F						
													**			
60	1972	FORD	3.16	55.40	549.31	5.50	120	2.20	50P	2.50P						
74	1972	VOLK	4.75	60.51	305.45	2.76	160	6.20	F*	F*						
77	1971	BUIC	4.05	82.03	512.39	2.11	200	3.30	200P	4.75P						
79	1971	CADI	1.41	43.94	997.63	2.79	150	.90	25P	.50P						
80	1971	CHEV	2.39	52.63	361.33	2.28	220	7.00	400P	4.30P						
82	1971	CHEV	4.66	82.30	708.13	3.43	180	4.40	F*	F*						
									P*	P*	3.89	31.55	670.04	4.01	90	1.20
83	1971	CHEV	3.41	57.20	734.60	3.65	800	5.40	F*	F*						
													**			
90	1971	FORD	2.61	36.40	384.44	4.77	150	4.30	F*	F*						
													**			
94	1971	MERC	3.95	73.49	688.63	5.12	200	3.50	100P	3.00P						
98	1971	PLYM	4.60	113.45	528.00	4.37	120	1.50	380P	7.00F						
									200P	3.00P	6.58	105.87	508.96	5.18	1500	6.00

P = PASS F = FAIL
* = NO VALUE REPORTED BY NEW JERSEY
** = VEHICLE FAILED TO RETURN FOR POST INSPECTION RETEST

RESULTS OF NEW JERSEY STATE INSPECTION

VEH NO.	MODEL YEAR	MAKE	PREINSPECTION TEST: 1972 FEDERAL TEST PROCEDURE HC	CO	CO2	NOXC	IDLE TEST IHC	ICO	NEW JERSEY INSPECTION IHC	ICO	POSTINSPECTION RETEST: 1972 FEDERAL TEST PROCEDURE HC	CO	CO2	NOXC	IDLE TEST IHC	ICO
104	1970	CHEV	17.20	93.60	485.35	3.63	120	3.20	F *	F *			**			
107	1970	CHEV	12.21	43.56	700.77	2.37	60	.50	F *	F *			**			
108	1970	CHEV	3.60	145.69	669.17	1.97	240	7.00	200P	4.30P						
109	1970	CHEV	4.17	91.37	572.27	3.13	190	6.80	F *	F *			**			
112	1970	FORD	5.69	119.07	492.59	3.74	700	7.50	200P 300P	8.00F 4.00P	3.18	78.86	527.95	3.62	300	2.50
118	1970	OLDS	3.52	70.83	637.24	3.30	200	5.60	F *	F *			**			
121	1970	PONT	9.32	56.33	679.03	2.80	1000	1.00	F *	F *			**			
125	1969	AMER	3.91	57.92	486.61	7.25	70	1.85	200P	6.00P						
135	1969	FORD	5.22	56.69	477.75	5.79	600	2.67	P *	P *						
138	1969	FORD	22.69	8.32	503.87	5.62	2000	.10	2000F	0.00P			**			
141	1969	OLDS	4.71	97.49	619.11	4.39	200	3.80	F *	F *			**			
142	1969	PLYM	4.92	92.16	515.27	3.18	1650	3.90	F *	F *			**			
152	1968	CHEV	11.58	74.12	426.97	5.20	1600	10.00	1400F 375P	7.90P 5.50P	5.05	42.11	476.77	5.00	500	3.60
161	1968	PLYM	5.14	89.93	446.45	4.47	220	5.40	P *	P *						
162	1968	PONT	4.57	71.21	525.75	4.04	150	4.60	200P	5.30P						
164	1967	AMER	4.33	63.68	354.93	4.34	370	10.00	F *	F *			**			

P = PASS F = FAIL
* = NO VALUE REPORTED BY NEW JERSEY
** = VEHICLE FAILED TO RETURN FOR POST INSPECTION RETEST

RESULTS OF NEW JERSEY STATE INSPECTION

VEH NO.	MODEL YEAR	MAKE	PREINSPECTION TEST 1972 FEDERAL TEST PROCEDURE HC	CO	CO2	NOXC	IDLE TEST IHC	ICO	NEW JERSEY INSPECTION IHC	ICO	POSTINSPECTION RETEST 1972 FEDERAL TEST PROCEDURE HC	CO	CO2	NOXC	IDLE TEST IHC	ICO
169	1967	CHEV	3.92	111.57	416.45	2.49	580	8.00	400P	8.00P						
177	1967	OLDS	4.41	66.48	683.37	2.39	130	1.10	100P	1.50P						
179	1967	PONT	5.67	71.09	486.20	4.90	500	6.90	P *	P *						
180	1967	VOLK	7.55	80.66	247.61	1.77	325	9.60	F *	F *						
													**			

P = PASS F = FAIL
* = NO VALUE REPORTED BY NEW JERSEY
** = VEHICLE FAILED TO RETURN FOR POST INSPECTION RETEST

APPENDIX A

LISTING OF VEHICLE AND TEST PARAMETERS

DEFINITIONS

COLUMN HEADING	DESCRIPTIONS
VEH:	VEHICLE NUMBER
RUN:	RUN NUMBER
DATE:	DATE OF TEST (MONTH, DAY, YEAR)
YR:	MODEL YEAR
MODL:	VEHICLE MODEL
C:	NUMBER OF CYLINDERS
CID:	ENGINE DISPLACEMENT IN CUBIC INCHES
V:	NUMBER OF CARBURETOR VENTURIS (0 = FUEL INJECTION)
T:	TYPE OF TRANSMISSION (1 = AUTOMATIC, 3 = 3-SPEED MANUAL, 4 = 4-SPEED MANUAL)
A:	AIR CONDITIONING (1 = YES, 2 = NO)
FT:	FUEL TANK CAPACITY IN GALLONS
IRPM:	IDLE RPM
P:	PCV SYSTEM OPERATIONAL (1 = YES, 2 = NO)
DW:	IGNITION POINT DWELL IN DEGREES (99 = ELECTRONIC IGNITION)
IGN:	IGNITION TIMING IN DEGREES (+ OR BLANK INDICATES BEFORE TOP DEAD CENTER, - INDICATES AFTER TOP DEAD CENTER)
TESTS:	ADDITIONAL TESTS PERFORMED ON THIS VEHICLE: 1. MODAL EMISSIONS 2. LIGHT HC AND RCHO 3. TEST OF A/C VEHICLES 4. EVAPORATIVE EMISSIONS 5. CORRELATION OF NEW JERSEY STATE INSPECTION 6. TESTS ON LOADED VEHICLE 7. SOUND LEVEL TESTS
INRT:	DYNAMOMETER INERTIA WEIGHT ETTING
RLHP:	ROAD LOAD HORSEPOWER SETTING
L:	WAS 10% RLHP ADDED TO SIMULATE AIR-CONDITIONER (1 = YES, 2 = NO)
DB:	DRY-BULB TEMPERATURE (DEG F.)
WB:	WET-BULB TEMPERATURE (DEG F.)
BAROM:	BAROMETRIC PRESSURE (INCHES HG)

LISTING OF VEHICLE AND TEST PARAMETERS

VEH	RU	DATE	YR	MAKE	MODL	C	CID	V	T	A	FT	IRPM	P	DW	IGN	TESTS	INRT	RLHP	L	DR	WB	BAROM
1	0141	740910	74	BUIC	REGA	8	350	2	1	1	22	700	1	27	1	1,2	4000	13.2	1	79	65	30.14
2	0139	740909	74	CHEV	CHEL	8	350	2	1	1	22	450	1	30	7	1,2	4000	12.0	2	79	64	30.20
3	0134	740906	74	CHEV	NOVA	8	350	2	1	1	22	600	1	29	8	1,2	3500	12.3	1	77	63	30.34
4	0137	740907	74	DODG	DART	6	198	2	1	2	16	600	1	47	3	1,2	3500	12.3	1	77	62	30.16
5	0181	740919	74	FORD	MAVE	6	250	1	1	1	20	700	1	29	6	1,2	3000	10.3	2	83	69	30.20
6	0140	740909	74	FORD	STAW	8	400	4	1	1	22	600	1	27	1	1,2	5000	14.7	1	78	66	30.22
7	0176	740917	74	OLDS	CUTL	8	350	4	1	1	26	600	1	28	2	1,2	4000	13.2	1	74	62	29.92
8	0128	740904	74	PLYM	FRY3	8	360	2	1	1	25	800	1	33	5	1,2	4500	14.0	1	77	62	29.99
9	0072	740802	74	PONT	BONN	8	400	2	1	1	26	720	1	27	17	1,2	4500	14.0	1	77	66	30.13
10	0130	740905	74	VOLK	SEDA	4	97	1	4	2	11	875	1	45	-4	1,2	2000	8.3	2	79	61	30.32
11	0187	740924	73	AMER	MATA	8	360	2	1	1	20	550	1	23	6	1,2	4000	13.2	1	80	56	29.32
12	0095	740820	73	BUIC	CNTY	8	350	2	1	1	26	650	1	28	-3	1,2,5	4000	13.2	1	85	68	30.20
13	0112	740828	73	BUIC	ELEC	8	455	4	1	1	26	475	1	30	6	1,2	5000	90.7	1	77	64	29.95
14	0168	740906	73	CADI	FLEE	8	472	4	1	1	28	750	1	28	8	1,2	5500	15.3	1	73	59	30.36
15	0162	740913	73	CAPR	2000	4	122	2	4	2	13	650	1	28	0	1,2	2500	9.4	2	86	72	29.92
16	0123	740903	73	CHEV	VEGA	4	140	1	1	1	11	825	1	32	12	1,2	2500	9.4	2	73	62	29.82
17	0117	740831	73	CHEV	NOVA	6	250	1	3	2	21	550	2	31	0	1,2	3500	11.2	2	74	59	29.94
18	0132	740905	73	CHEV	CHEL	8	307	2	1	1	22	500	1	29	8	1,2	4000	12.0	2	80	62	30.32
19	0185	740923	73	CHEV	NOVA	6	350	2	1	1	21	500	1	27	16	1,2	3500	12.3	1	73	56	30.28
20	0111	740828	73	CHEV	BELA	8	350	2	1	1	26	625	1	31	6	1,2	4500	12.7	2	84	71	29.94
21	0127	740904	73	CHEV	IMPA	8	350	2	1	2	26	800	1	28	10	1,2	4500	14.0	1	73	61	29.96
22	0129	740905	73	CHEV	IMPA	8	350	2	1	1	26	550	1	31	7	1,2	4500	14.0	1	72	59	30.30
23	0177	740919	73	CHEV	STAW	8	350	2	1	1	20	600	1	28	8	1,2	5000	14.7	1	74	65	30.24
24	0131	740905	73	CHRY	NEWP	8	400	2	1	1	23	600	1	37	8	1,2	4500	14.0	1	74	58	30.32
25	0154	740911	73	DATS	SEDA	4	71	2	4	2	12	800	1	45	5	1,2	2000	8.3	2	82	67	30.14
26	0087	740815	73	DODG	DART	6	225	1	1	2	16	500	1	35	7	1,2,5	3000	10.3	2	71	59	30.19
26	156R	740914	73	DODG	DART	6	225	1	1	2	16	500	1	35	7	2,5	3000	10.3	2	82	65	30.04
27	0122	740902	73	DODG	CHAR	8	318	2	1	1	20	650	1	36	0	1,2	4000	13.2	1	79	64	29.98
28	0116	740830	73	FORD	PINT	4	122	2	3	2	11	600	1	34	6	1,2	2750	9.9	2	83	70	29.89
29	0163	740913	73	FORD	PINT	4	122	1	1	2	11	1000	1	32	3	1,2	2500	9.4	2	75	63	29.98
30	0091	740819	73	FORD	MAVE	8	302	2	1	1	15	900	1	24	1	1,2	3000	11.3	1	73	61	30.04
31	0096	740820	73	FORD	TORI	8	351	2	1	1	22	700	1	26	-6	1,2,5	4000	12.0	2	83	66	30.20
32	0106	740827	73	FORD	TORI	8	351	2	1	1	22	675	1	26	10	1,2	4000	13.2	1	76	64	30.08
33	0094	740820	73	FORD	LTD	8	400	2	1	1	22	450	1	26	2	1,2	4500	14.0	1	80	63	30.02
34	0153	740911	73	FORD	LTD	8	400	2	1	1	22	650	1	27	6	1,2	4500	14.0	1	77	63	30.16
35	0119	740902	73	MAZD	RX3	2	70	4	1	2	12	400	1	99	0	1,2	2500	9.4	2	72	61	29.94
36	0074	740807	73	MERC	MARQ	8	429	4	1	1	22	580	1	26	0	1,2	5000	14.7	1	71	62	30.25
37	0115	740830	73	OLDS	CUTL	8	350	4	1	1	22	575	1	28	12	1,2,5	4000	13.2	1	76	65	29.89
38	0165	740914	73	OLDS	VIST	8	350	4	1	1	22	650	1	29	2	1,2	4500	14.0	1	75	59	30.04
39	0127	740828	73	PLYM	SATE	8	318	2	1	1	21	800	1	33	0	1,2	3500	11.2	2	74	65	29.95

LISTING OF VEHICLE AND TEST PARAMETERS

VEH	RU	DATE	YR	MAKE	MODL	C	CID	V	T	A	FT	IRPM	P	DW	IGN	TESTS	INRT	RLHP	L	DR	WB	BAROM
40	0169	740916	73	PLYM	DUST	6	225	1	1	1	16	700	1	46	1	1,2	3000	11.3	1	78	61	30.10
41	0082	740812	73	PONT	LEMA	8	350	2	1	1	22	780	1	26	12	1,2	4000	13.2	1	78	63	30.13
42	0089	740816	73	PONT	CATA	8	400	2	1	1	25	720	1	21	12	1,2,5	4500	14.0	1	78	63	30.20
43	0144	740910	73	TOYO	CELI	4	120	2	1	2	12	900	1	45	-1	1,2,5	2500	9.4	2	81	65	30.11
44	0126	740924	73	VOLK	SEDA	4	97	1	4	2	11	900	1	46	-4	1,2	2000	8.8	2	74	64	29.95
45	0182	740919	73	VOLK	SEDA	4	97	1	4	1	11	700	1	46	-1	1,2	2250	9.7	2	74	65	30.25
46	0168	740914	72	BUIC	CENT	8	455	4	1	1	25	650	1	30	4	1,2	4500	14.0	1	79	60	30.03
47	0164	740913	72	BUIC	ELEC	8	455	4	1	1	25	625	1	29	4	1,2	5000	14.7	1	83	70	29.95
48	0166	740915	72	CHEV	VEGA	4	140	1	3	2	11	1000	1	11	12	1,2	2750	9.9	2	78	59	30.14
49	0193	740925	72	CHEV	NOVA	8	307	2	1	1	16	500	1	27	6	1,2	3500	11.2	2	76	59	29.93
50	0138	740929	72	CHEV	NOVA	6	250	1	1	2	16	550	1	27	4	1,2	3000	10.3	2	82	67	30.19
51	0152	740930	72	CHEV	IMPA	8	350	2	1	1	23	650	1	27	8	1,2	4500	14.0	1	76	56	29.82
52	008[illegible]	740822	72	CHEV	BROG	8	350	2	1	1	22	700	1	20	-3	1,2	5000	14.7	1	79	67	30.24
53	0171	740916	72	CHEV	IMPA	8	350	2	1	1	23	500	1	25	10	1,2	4500	14.0	1	78	63	30.08
54	0151	740909	72	CHEV	IMPA	8	350	2	1	1	23	800	1	26	10	1,2	4500	14.0	1	82	66	30.23
55	0189	740924	72	DATS	0510	4	97	2	4	2	12	475	1	24	7	1,2	2250	8.8	2	78	54	30.48
56	0123	740831	72	DODG	CHAL	8	318	2	1	2	16	800	1	27	-1	1,2	3500	11.2	2	84	69	29.95
57	0115	740827	72	DODG	POLA	8	360	2	1	1	23	680	1	31	0	1,2	4000	13.2	1	83	70	30.04
58	0114	740828	72	FORD	PINT	4	122	2	1	2	11	400	1	23	10	1,2	2250	8.8	2	86	71	29.92
59	0110	740821	72	FORD	TORI	8	302	2	1	2	23	700	1	24	-2	1,2,5	4000	12.0	2	83	67	30.35
60	0075	740810	72	FORD	TORI	8	351	2	1	1	22	520	1	27	-3	1,2,5	4000	12.0	2	75	62	30.20
61	0073	740838	72	FORD	BRON	8	351	2	1	1	22	550	1	27	10	1,2	4500	14.0	1	72	64	30.19
62	0136	740918	72	FORD	STAW	8	351	2	1	1	21	500	1	27	8	1,2	4500	14.0	1	77	63	30.22
63	0147	740919	72	FORD	PINT	4	122	2	4	1	11	750	1	37	-2	1,2	2500	10.3	1	82	65	30.20
64	0158	740912	72	LINC	CONT	8	460	4	1	1	-0	500	1	27	10	1,2	5500	15.3	1	84	68	29.98
65	0157	740912	72	MERC	MARQ	8	429	4	1	1	22	575	1	23	3	1,2	4500	14.0	1	76	65	30.08
66	0124	740913	72	OLDS	CUTL	8	350	2	1	1	20	550	1	29	10	1,2	3500	12.3	1	73	63	29.78
67	011[illegible]	740829	72	OLDS	DELT	8	455	4	1	1	24	550	1	30	7	1,2	5000	14.7	1	80	68	29.96
68	0113	740829	72	OPEL	STAW	4	116	2	1	2	12	1000	1	29	12	1,2	2500	9.4	2	86	72	29.87
69	0186	740924	72	PLYM	FURY	8	318	2	1	1	21	700	1	99	2	1,2	4500	12.7	2	74	56	30.38
70	0121	740912	72	PLYM	FRYI	8	318	2	1	1	21	650	1	28	0	1,2	4000	13.2	1	76	62	29.98
71	0109	740828	72	PONT	LEMA	8	350	2	1	1	20	620	1	30	8	1,2	4000	13.2	1	80	68	29.96
72	0178	740918	72	PONT	GRAN	8	400	4	1	1	26	600	1	27	9	1,2	4000	13.2	1	82	64	29.96
73	0184	740920	72	TOYO	CELI	4	120	2	4	2	18	650	1	32	7	1,2	2500	9.4	2	78	64	30.18
74	0102	740822	72	VOLK	CONV	4	97	1	4	2	11	900	1	22	0	1,2,5	2250	8.8	2	77	66	30.25
75	0155	740912	72	VOLK	SEDA	4	97	1	1	2	11	600	1	46	-5	1,2	2250	8.8	2	84	73	29.79
76	0006	740719	71	AMER	AMBA	8	304	2	1	1	20	570	1	29	6	2	4000	12.0	2	69	61	29.87
77	0011	740722	71	BUIC	SKYL	8	350	2	1	1	25	680	1	29	10	2,5	3500	12.3	1	71	58	30.08
78	0064	740730	71	BUIC	ELEC	8	455	4	1	1	25	580	1	30	5	2	5000	14.7	1	73	62	29.85
79	0086	740814	71	CADI	DEVI	8	472	4	1	1	28	730	1	27	4	2,5	5000	14.7	1	86	82	30.00

LISTING OF VEHICLE AND TEST PARAMETERS

VEH	RU	DATE	YR	MAKE	MODL	C	CID	V	T	A	FT	IRPM	P	DW	IGN	TESTS	INRT	RLHP	L	DB	WB	BAROM
80	0079	740809	71	CHEV	VEGA	4	140	1	1	2	11	710	1	30	8	2,5	2500	9.4	2	77	66	30.12
81	0050	740717	71	CHEV	CHEL	8	307	2	1	1	19	620	2	25	11	2	3500	11.2	2	73	58	30.23
82	0020	740723	71	CHEV	CAPR	8	350	2	1	1	24	650	1	30	8	2,5	4500	12.7	2	73	65	30.15
82	118R	740831	71	CHEV	CAPR	8	350	2	1	1	24	700	1	29	10	2,5	4500	12.7	2	76	64	29.98
83	0028	740701	71	CHEV	CHEL	8	350	2	1	1	18	530	1	26	4	2,5	4000	13.2	1	84	68	29.87
84	0084	740821	71	CHEV	IMPA	8	350	4	1	1	24	750	1	27	0	2	4500	14.0	1	74	63	30.32
85	0017	740606	71	CHEV	CAPR	8	400	2	1	1	24	470	1	31	10	2	4500	14.0	1	81	65	29.89
86	0076	740808	71	CHRY	NEWP	8	440	4	1	1	23	575	1	32	10	2	4500	14.0	1	80	67	30.16
87	0194	740928	71	DATS	0510	4	97	2	4	2	12	775	1	99	0	2	2500	9.4	2	77	68	30.10
88	0058	740724	71	DODG	CHAR	8	318	2	1	1	21	620	1	30	-4	2	3500	12.3	1	72	63	30.12
89	0023	740731	71	FORD	PINT	4	122	2	4	2	11	620	1	50	5	2	2250	8.8	2	79	64	30.00
90	0084	740813	71	FORD	MAVE	6	200	1	1	2	15	690	1	26	0	2,5	2750	9.9	2	76	63	30.03
91	0055	740723	71	FORD	TORI	8	302	2	1	1	18	610	1	28	10	2	4000	12.0	2	75	63	30.13
92	0070	740801	71	FORD	GALA	8	351	2	1	1	23	540	1	32	10	2	4000	13.2	1	79	64	30.06
93	0146	740912	71	FORD	STAW	8	390	2	1	1	23	750	1	21	8	2	4500	14.0	1	83	68	30.10
94	0025	740810	71	MERC	MARQ	8	400	2	1	1	22	430	1	30	0	2,5	5000	14.7	1	77	63	30.18
95	0161	740915	71	OLDS	CUTL	8	350	4	1	1	24	550	1	29	6	2	3500	12.3	1	82	62	30.05
96	0026	740924	71	OLDS	DELT	8	455	4	1	1	21	540	1	28	8	2	4500	14.0	1	71	60	30.05
97	0071	740802	71	PLYM	VALI	6	225	1	3	2	16	760	1	30	12	2	3000	10.3	2	73	62	30.11
98	0015	740607	71	PLYM	FRY3	8	318	2	1	1	21	620	2	32	0	2,5	4000	13.2	1	73	60	29.85
98	078R	740809	71	PLYM	FRY3	8	318	2	1	1	21	550	1	32	10	2,5	4000	13.2	1	81	68	30.08
99	0057	740724	71	PONT	LEMA	8	350	2	1	1	19	740	2	27	10	2	4000	13.2	1	68	60	30.11
100	0192	740925	71	PONT	SAFA	8	455	2	1	1	24	450	1	12	8	2	5000	14.7	1	79	62	30.00
101	0069	740731	71	TOYO	CORO	4	71	1	4	1	11	980	1	52	10	2	2000	8.3	2	80	65	30.01
102	0048	740718	71	VOLK	SEDA	4	97	1	4	2	11	820	3	52	0	2	2250	8.8	2	73	62	30.20
103	0065	740730	70	BUIC	RIVE	8	455	4	1	1	21	450	1	23	2	2	4500	14.0	1	86	69	29.90
104	0056	740725	70	CHEV	CHEL	6	250	1	3	2	18	750	1	32	-6	2,5	4000	12.0	2	75	63	30.13
105	0014	740926	70	CHEV	MALI	8	307	2	1	2	20	570	1	28	8	2	3500	11.2	2	86	67	29.92
106	0033	740703	70	CHEV	IMPA	8	350	2	1	1	25	590	1	28	10	2	4000	12.0	2	81	72	30.06
107	0024	740720	70	CHEV	IMPA	8	350	2	1	1	25	630	1	31	4	2,5	4000	13.2	1	72	58	29.93
108	0092	740817	70	CHEV	BISC	8	350	2	1	2	20	700	1	22	-2	2,5	4000	13.2	1	75	65	29.98
109	0009	740606	70	CHEV	IMPA	8	400	2	1	1	25	560	1	31	6	2,5	4000	13.2	1	76	63	29.87
110	0167	740915	70	DODG	CHAR	8	383	4	3	2	19	775	1	26	3	2	3500	12.3	1	74	60	30.16
111	0041	740718	70	FORD	MAVR	6	200	1	4	2	16	700	1	36	8	2	2750	9.9	2	84	72	29.78
112	0019	740611	70	FORD	FALC	8	302	2	1	1	16	550	1	32	6	2,5	3500	11.2	2	76	65	29.86
112	093R	740817	70	FORD	FALC	8	302	2	1	1	22	550	1	32	6	2,5	3500	11.2	2	81	67	29.73
113	0051	740720	70	FORD	GALA	8	351	2	1	1	25	330	1	30	10	2	4000	12.0	2	69	55	29.92
114	0133	740906	70	FORD	LTD	8	351	2	1	2	20	575	1	29	9	2	4500	14.0	1	70	60	30.36
115	0026	740724	70	FORD	LTD	8	390	2	1	1	25	550	1	25	6	2	4000	13.2	1	75	65	30.10
116	0066	740730	70	MERC	MARQ	8	429	2	1	1	25	430	1	26	16	2	4500	14.0	1	82	68	29.90

LISTING OF VEHICLE AND TEST PARAMETERS

VEH	RUN	DATE	YR	MAKE	MODL	C	CID	V	T	A	FT	IRPM	P	DW	IGN	TESTS	INRT	RLHP	L	DB	WB	BAROM
117	0053	740720	70	OLDS	F85V	8	350	2	1	1	23	550	2	31	0	2	4500	14.0	1	74	59	29.94
118	0183	740920	70	OLDS	SEDA	8	455	4	1	1	25	600	1	30	10	2,5	4500	14.0	1	80	65	30.17
119	0063	740729	70	PLYM	FRY3	8	318	2	1	1	19	700	1	33	-5	2	4000	13.2	1	84	70	29.87
120	0104	740824	70	PLYM	DUST	8	318	2	1	2	19	725	1	30	0	2	3500	11.2	2	84	69	30.08
121	0052	740719	70	PONT	FIRE	8	350	2	1	1	20	600	1	28	8	2,5	3500	12.3	1	77	67	29.82
122	0043	740713	70	PONT	CATA	8	400	2	1	1	25	600	2	31	3	2	4500	14.0	1	77	63	30.13
123	0039	740712	70	TOYO	CORO	4	71	1	4	2	11	610	1	54	-5	2	2000	8.3	2	79	63	30.06
124	0007	740817	70	VOLK	2DRS	4	97	1	4	2	11	1000	1	44	1	2	2000	8.3	2	76	66	29.97
125	0012	740605	69	AMER	AMBA	8	290	2	1	1	22	510	2	26	5	2,5	4000	13.2	1	75	65	29.88
126	0067	740730	69	BUIC	LESA	8	350	2	1	1	25	580	1	28	8	2	4500	14.0	1	80	67	29.88
127	0148	740910	69	CHEV	NOVA	6	250	1	1	2	18	650	1	29	0	2	3000	10.3	2	86	68	30.09
128	0047	740717	69	CHEV	CHEL	8	307	2	1	1	20	410	1	28	8	2	3500	11.2	2	84	62	30.22
129	0022	740611	69	CHEV	IMPA	8	327	2	1	1	24	450	1	30	-4	2	4000	12.0	2	82	66	29.78
130	0142	740911	69	CHEV	CAPR	8	350	4	1	1	25	550	1	26	6	2	4000	12.0	2	83	67	30.12
131	0018	740607	69	CHEV	CAPR	8	350	4	1	1	24	550	1	28	4	2	4000	13.2	1	73	58	29.88
132	0035	740708	69	CHEV	IMPA	8	327	2	1	1	24	470	1	30	7	2	4000	13.2	1	85	70	30.02
133	0038	740711	69	CHRY	NEWP	8	383	2	1	1	24	590	1	31	15	2	4000	13.2	1	80	62	29.89
134	0061	740726	69	DODG	DART	6	225	1	1	1	19	400	1	39	9	2	3000	10.3	2	77	65	30.15
135	0005	740529	69	FORD	FAIR	8	302	2	1	2	25	500	1	26	14	2,5	3500	11.2	2	75	63	29.89
136	0016	740711	69	FORD	GALA	8	302	2	1	1	25	550	1	33	12	2	4000	12.0	2	78	63	29.90
137	0125	740904	69	FORD	LTD	8	351	2	1	2	25	725	1	29	4	2	4000	12.0	2	77	64	29.98
138	0081	740812	69	FORD	MUST	8	351	2	1	1	20	420	1	22	10	2,5	3500	12.3	1	74	60	30.18
139	0031	740702	69	FORD	STAW	8	390	2	1	1	20	400	1	33	0	2	4500	14.0	1	83	68	30.04
140	0143	740912	69	MERC	COUG	8	351	2	1	1	20	750	1	22	0	2	3500	12.3	1	86	72	30.02
141	0101	740824	69	OLDS	DELT	8	455	2	1	1	25	650	1	28	4	2,5	4000	13.2	1	76	65	30.07
142	0034	740628	69	PLYM	VIP	8	318	2	1	1	19	540	1	25	7	2,5	4000	12.0	2	72	61	30.25
143	0046	740717	69	PONT	TEMP	8	350	2	1	1	22	600	1	28	4	2	3500	12.3	1	78	60	30.22
144	0049	740718	69	PONT	EXEC	8	400	2	1	1	27	620	1	30	8	2	4500	14.0	1	80	65	30.15
145	0054	740723	69	VOLK	SEDA	4	91	1	4	2	11	900	1	53	0	2	2000	8.3	2	72	61	30.14
146	0191	740925	68	AMER	REBE	8	360	2	1	1	22	600	1	30	5	2	3500	11.2	2	72	58	30.10
147	0149	740909	68	BUIC	SKYL	8	350	2	1	2	20	625	1	28	-2	2	4000	13.2	1	72	62	30.16
148	0003	740523	68	CADI	CALA	8	472	4	1	1	26	520	1	25	4	2	5000	14.7	1	79	66	29.97
149	0172	740917	68	CHEV	CHEL	6	230	2	1	2	20	775	1	21	12	2	3500	11.2	2	79	62	30.01
150	0036	740628	68	CHEV	BELA	8	307	2	1	2	24	530	1	34	4	2	4000	12.0	2	70	61	30.18
151	0029	740628	68	CHEV	IMPA	8	327	4	1	1	24	440	1	25	2	2	4000	12.0	2	71	63	30.21
152	0042	740716	68	CHEV	BELA	8	307	2	1	2	24	430	1	30	8	2,5	4000	12.0	2	82	69	29.91
152	0988	740821	68	CHEV	BELA	8	307	2	1	2	24	720	1	25	-13	2,5	4000	12.0	2	86	68	30.33
153	0189	740919	68	CHEV	STAW	8	307	2	1	2	24	550	1	29	6	2	4500	12.7	2	82	65	30.22
154	0060	740725	68	DODG	CORO	8	383	2	1	1	19	590	1	28	0	2	3500	12.3	1	73	61	30.13
155	0173	740918	68	FORD	STAW	8	289	1	1	1	20	700	1	22	0	2	3500	11.2	2	84	65	29.98

LISTING OF VEHICLE AND TEST PARAMETERS

VEH	RU	DATE	YR	MAKE	MODL	C	CID	V	T	A	FT	IRPM	P	DW	IGN	TESTS	INRT	RLHP	L	DB	WB	BAROM
156	0062	740726	68	FORD	MUST	8	289	2	1	2	16	550	1	27	8	2	3000	10.3	2	74	63	30.14
157	0013	740917	68	FORD	LTD	8	302	2	1	1	25	700	1	24	6	2	4000	12.0	2	72	63	30.15
158	0040	740712	68	FORD	GALA	8	390	2	1	1	25	550	1	27	4	2	4000	13.2	1	86	63	30.04
159	0008	740715	68	MERC	COUG	8	302	2	1	2	16	500	1	30	17	2	3500	12.3	1	85	72	29.74
160	0045	740710	68	OLDS	CUTL	8	350	2	1	2	20	550	1	35	4	2	3500	12.3	1	76	61	29.89
161	0090	740815	68	PLYM	FRY3	8	318	2	1	2	19	540	1	25	0	2,5	4000	12.0	2	83	67	30.17
162	0083	740813	68	PONT	CATA	8	400	2	1	1	27	550	1	30	0	2,5	4000	13.2	1	77	64	29.99
163	0068	740731	68	VOLK	SED2	4	91	1	4	2	11	830	3	47	0	2	2250	8.8	2	73	62	30.01
164	0085	740815	67	AMER	REBE	6	232	1	1	2	22	600	1	34	2	2,5	3500	11.2	2	79	65	30.18
165	0059	740725	67	BUIC	LESA	8	340	4	1	1	25	600	1	23	12	2	4000	12.0	2	75	64	30.13
166	0077	740809	67	CADI	DEVI	8	429	4	1	1	26	540	1	29	4	2	5000	14.7	1	82	69	30.16
167	0036	740709	67	CHEV	BISC	6	250	1	3	2	24	570	1	24	1	2	3500	11.2	2	84	71	29.93
168	0032	740628	67	CHEV	IMPA	8	283	2	1	2	24	365	1	32	0	2	4000	12.0	2	73	64	30.14
169	0010	740604	67	CHEV	CHEL	8	283	2	1	2	20	470	2	28	0	2,5	3500	11.2	2	84	69	29.91
170	0027	740701	67	CHEV	MALI	8	327	4	1	2	20	460	1	31	4	2	3500	12.3	1	83	69	29.87
171	0044	740713	67	CHRY	NEWP	8	383	2	1	2	25	460	1	26	11	2	4000	13.2	1	84	65	30.13
172	0165	740915	67	DODG	DART	6	273	1	1	1	18	1000	1	25	5	2	3000	10.3	2	80	60	30.07
173	0001	740522	67	FORD	GALA	8	289	2	1	1	25	530	1	23	9	2	4000	12.0	2	76	65	29.96
174	0004	740524	67	FORD	GALA	8	289	2	1	2	25	525	3	25	4	2	4000	12.0	2	69	59	29.87
175	0097	740820	67	FORD	GALA	8	390	2	1	1	25	600	1	23	5	2	4000	13.2	1	82	67	30.20
176	0103	740824	67	MERC	MONR	8	390	2	1	2	25	850	1	28	16	2	4000	12.0	2	86	72	30.06
177	0088	740816	67	OLDS	DELT	8	425	4	1	1	26	630	1	23	6	2,5	4500	14.0	1	70	58	30.20
178	0002	740522	67	PLYM	FRY3	6	225	1	1	2	19	580	3	35	0	2	4000	12.0	2	80	66	29.98
179	0021	740611	67	PONT	TEMP	8	326	2	1	2	22	600	1	29	4	2,5	3500	11.2	2	80	64	29.73
180	0037	740711	67	VOLK	SED2	4	91	1	4	2	11	1200	1	39	5	2,5	2000	8.3	2	82	62	29.89

APPENDIX B

LISTINGS OF TEST VEHICLE USE AND MAINTENANCE DATA

DEFINITIONS

COLUMN HEADING	DESCRIPTION
VEH:	VEHICLE NUMBER
YR:	MODEL YEAR
MAKE:	VEHICLE MAKE
MODL:	VEHICLE MODEL
VIN:	VEHICLE IDENTIFICATION NUMBER
ODOM:	ODOMETER READING
PRDATE:	PURCHASE DATE OF VEHICLE (MONTH, YEAR)
N:	NEW OR USED (1 = NEW, 2 = USED)
VMT1:	VEHICLE MILES TRAVELED DURING THE PAST YEAR
VMT2:	VEHICLE MILES TRAVELED DURING THE YEAR BEFORE LAST
%C:	PERCENT CITY DRIVING
%S:	PERCENT SUBURBAN DRIVING
%F:	PERCENT FREEWAY DRIVING
LOC:	DATE OF LAST OIL CHANGE (MONTH, YEAR OR 9999 = DON-T KNOW
%W:	PERCENT DRIVING TO AND FROM WORK
%G:	PERCENT SHOPPING
%T:	PERCENT TRANSPORTING FAMILY MEMBERS
%V:	PERCENT VACATION DRIVING
%B:	PERCENT BUSINESS DRIVING (NOT TO AND FROM WORK)
LTU:	LAST TUNE UP (MONTH, YEA)
W:	WHO PERFORMED TUNE UP (1 = FRANCHISED DEALER, 2 = INDEPENDENT GARAGE, 3 = SERVICE STATION, 4 = OWNER OR FRIEND, 9 = DON-T KNOW)
999:	INDICATES DON-T KNOW

LISTING OF TEST VEHICLE USE AND MAINTENANCE DATA

VEH	YR	MAKE	MODL	VIN	ODOM	PRDATE	N	VMT1	VMT2	%C	%S	%F	LOC	%W	%G	%T	%V	%B	LTU	W
1	74	BUIC	REGA	4J57H46111682	7143	1073	1	7000	0	85	10	5	774	90	5	5	0	0	774	1
2	74	CHEV	CHEL	1D37H48416131	9404	674	1	9000	0	60	20	20	874	60	10	3	7	20	874	2
3	74	CHEV	NOVA	1X17H4W164609	12797	1273	1	12000	0	10	75	15	774	75	10	10	5	0	1273	1
4	74	DODG	DART	LL23H4F210860	1896	574	1	1000	0	60	20	20	874	50	10	0	40	0	574	1
5	74	FORD	MAVE	004X92L127019	6923	1073	1	7000	0	25	50	25	9999	10	0	0	0	90	9999	9
6	74	FORD	STAW	0C4E76S102332	3632	674	1	3000	0	50	40	10	674	50	10	10	10	20	674	1
7	74	OLDS	CUTL	3J57M4M132516	6287	1074	1	7000	0	80	10	10	674	80	0	20	0	-0	1074	1
8	74	PLYM	F Y3	PH43K4P225409	4256	9999	1	4000	0	99	99	99	9999	99	99	99	99	99	9999	9
9	74	PO Y	BONN	2N39R4P161492	2949	1074	1	2000	1000	50	25	25	374	10	20	50	20	0	374	2
10	74	VOLK	SEDA	0001142318326	7730	274	1	7000	0	10	10	80	874	80	10	0	10	0	874	1
11	73	AMER	MATA	A3A197N241743	18691	573	1	15000	0	25	75	0	774	75	25	0	0	0	774	1
12	73	BUIC	CNTY	4J57H3G122428	15195	273	1	5000	10000	75	15	10	874	75	10	5	10	0	674	2
13	73	BUIC	ELEC	4V39T3Y204306	26892	373	1	20000	6000	50	25	25	474	25	5	0	10	60	774	1
14	73	CADI	FLEE	6H69R3D113979	38978	973	2	8000	0	20	30	50	574	15	10	5	0	70	574	2
15	73	CAPR	20[illegible]	00GAECME91554	27787	1174	1	15000	15000	50	20	30	874	50	0	20	30	0	774	1
16	73	CHEV	VEGA	1V11B3U327489	12158	673	1	12000	0	35	50	15	874	50	10	0	30	10	673	1
17	73	CHEV	NOVA	1X69D3W221996	1181	373	1	9000	0	30	60	10	973	95	0	2	2	1	973	3
18	73	CHEV	CHEL	1C37F38611748	16859	773	1	13000	0	35	60	5	773	40	20	20	20	0	773	1
19	73	CHEV	NOVA	1X69F3W239362	20865	9999	1	10000	99000	99	99	99	9999	99	99	99	99	99	9999	9
20	73	CHEV	BELA	1K69H3 T203770	22711	273	1	13000	0	60	10	30	9999	40	10	30	15	5	374	2
21	73	CHEV	IMPA	1L57H3T286498	12735	673	1	12000	0	10	40	50	874	40	5	20	35	0	673	1
22	73	CHEV	IMPA	1L47H3T137483	26628	1173	2	10000	0	70	10	20	674	50	10	10	30	0	674	2
23	73	CHEV	STAW	1L45H3T196713	22671	7310	1	22000	0	90	5	5	9999	80	10	0	10	0	9999	9
24	73	CHRY	NEWP	CM23M3C165378	18973	1172	1	8000	8000	50	30	20	674	50	10	20	20	0	674	3
25	73	DATS	SEDA	00LB110508537	19343	973	1	18000	0	50	25	25	874	70	10	10	10	0	874	1
26	73	DODG	DART	LL29C3B569622	9060	973	1	10000	0	35	35	30	674	25	25	0	25	25	973	1
26R	73	DODG	DART	LL29C3B569622	9914	973	1	10000	0	35	35	30	674	25	25	0	25	25	973	1
27	73	DODG	CHAR	WH23G3A246160	14158	473	1	10000	0	30	40	30	774	10	10	0	80	0	774	2
28	73	FORD	PINT	003T12X183977	9359	173	1	6000	3000	20	50	30	774	0	30	40	30	0	774	2
29	73	FORD	PINT	F3T11X131327F	24464	1072	1	12000	12000	20	15	65	274	65	35	0	0	0	874	4
30	73	FORD	MAVE	003X92F111961	14098	173	1	10000	0	10	50	40	474	10	10	0	80	0	774	2
31	73	FORD	TORI	003B30H186019	33860	373	1	30000	0	15	20	65	674	35	15	0	60	0	674	2
32	73	FORD	TORI	003B30H121251	9716	1073	1	7000	0	10	40	50	774	5	20	5	70	0	1073	1
33	73	FORD	LTD	003E625249018	20539	473	1	18000	0	75	10	15	674	75	15	5	5	0	474	2
34	73	FORD	LTD	F3W685105115F	35114	1074	1	14000	2000	5	15	80	674	60	5	0	30	5	674	2
35	73	MAZD	808X3	005124W111698	13200	273	1	10000	0	40	40	20	674	0	40	30	30	0	674	2
36	73	MERC	MARQ	003B62N533503	8723	373	1	7000	0	90	5	5	774	90	0	0	10	0	9999	9
37	73	OLDS	CUTL	3F37K3M515145	12464	973	1	12000	0	15	35	50	574	80	10	0	10	0	973	1
38	73	OLDS	VIST	3J35K3G157482	10783	1073	1	10000	0	70	15	15	674	0	25	25	25	25	374	1
39	73	PLYM	SATE	RL21C3R204114	42438	1073	2	4000	38000	60	20	20	374	0	50	0	40	10	374	2

LISTING OF TEST VEHICLE USE AND MAINTENANCE DATA

VEH	YR	MAKE	MODL	VIN	ODOM	PRDATE	N	VMT1	VMT2	%C	%S	%F	LOC	%W	%G	%T	%V	%B	LTU	W
40	73	PLYM	DUST	VL29C3853b703	10146	873	1	10000	0	95	0	5	9999	88	2	0	10	2	9999	1
41	73	PONT	LEMA	2G29M31526852	8836	174	1	8000	0	50	0	50	974	50	25	25	0	0	974	1
42	73	PONT	CATA	2L57R3P393952	6521	973	1	6000	0	15	50	35	474	0	20	10	50	20	474	1
43	73	TOYO	CELI	000RA21057848	25517	374	1	23000	0	20	20	60	1173	50	10	0	10	30	1173	1
44	73	VOLK	SEDA	0001132924426	19456	1073	1	19000	0	5	25	70	874	5	5	1	88	1	874	1
45	73	VOLK	SEDA	0001132638631	13427	1073	1	13000	0	50	25	25	9999	80	2	2	2	14	9999	9
46	72	BUIC	CENT	4P39T2Y206104	5023	872	1	3000	3000	80	10	10	674	0	80	20	0	0	674	2
47	72	BUIC	ELEC	4V39T2Y109437	42310	971	1	15000	15000	50	20	30	374	5	15	20	50	10	874	4
48	72	CHEV	VEGA	1V15B2V427552	20249	774	1	10000	10000	60	10	30	874	0	60	10	30	0	774	1
49	72	CHEV	NOVA	1X27F2W242458	49000	474	1	10000	26000	70	20	10	874	0	0	0	25	5	874	4
50	72	CHEV	NOVA	1X2702W380006	5001	1074	1	2000	3000	90	10	0	9999	80	20	0	0	0	9999	1
51	72	CHEV	IMPA	1M57H2T253272	19916	774	2	2000	0	75	15	10	874	0	90	0	10	0	774	4
52	72	CHEV	BROG	1K35H2T207716	29190	573	1	10000	20000	15	40	45	774	15	15	15	55	0	1073	1
53	72	CHEV	IMPA	1M39H2T193778	14157	372	1	6000	5000	75	20	5	9999	0	30	30	40	0	9999	2
54	72	CHEV	IMPA	1M47H2T211759	16845	674	2	3000	0	80	15	5	674	80	10	0	5	5	674	1
55	72	DATS	0510	00PL510963077	30354	1074	1	15000	15000	20	40	40	674	75	10	0	15	0	674	1
56	72	DODG	CHAL	JH23G2B264763	30946	172	1	15000	15000	70	20	10	774	80	5	5	10	0	574	4
57	72	DODG	POLA	DM23K2F177771	21797	174	2	5000	0	80	10	10	674	0	50	50	0	0	374	1
58	72	FORD	PINT	002T10X131020	62778	1071	1	21000	21000	5	5	90	774	80	10	5	5	0	474	4
59	72	FORD	TORI	002B31F163876	23074	272	1	5000	12000	80	10	10	574	30	40	25	5	0	1273	2
60	72	FORD	TORI	002B35H251773	35349	972	1	15000	20000	20	40	40	674	10	10	0	80	0	1073	1
61	72	FORD	BROU	002E67H264883	22629	572	1	10000	10000	50	15	35	674	60	10	10	20	0	673	2
62	72	FORD	STAW	002E70H202348	33066	472	1	18000	15000	40	40	20	674	0	60	20	20	0	674	2
63	72	FORD	PINT	F2T11X205234F	28936	972	1	10000	10000	50	25	25	874	80	0	0	20	0	874	2
64	72	LINC	CONT	002Y82A843574	34900	172	1	18000	0	85	10	5	674	10	5	0	0	85	674	1
65	72	MERC	MARQ	002B66NS17569	32628	674	2	5000	0	70	15	15	674	80	10	5	5	0	674	3
66	72	OLDS	CUTL	3F87H2G146475	30454	772	1	17000	12000	40	10	50	774	25	5	5	65	0	574	4
67	72	OLDS	DELT	3V39T2 E147767	19258	672	1	10000	7000	80	10	10	574	70	10	10	10	0	573	4
68	72	OPEL	STAW	0000549602220	31837	772	1	10000	10000	60	10	30	874	0	60	10	30	0	773	1
69	72	PLYM	FURY	PM45G20280831	12492	1074	1	10000	10000	30	30	40	874	25	0	0	0	75	874	1
70	72	PLYM	FRY1	PL41G2F251696	26879	572	1	11000	14000	5	75	20	674	1	20	75	4	0	1073	2
71	72	PONT	LEMA	2D69M2P185780	14839	174	2	2000	0	30	50	20	174	0	50	0	50	0	174	1
72	72	PONT	GRAN	2K57T2A127851	8316	1274	1	8000	0	50	0	50	574	0	25	25	50	0	9999	9
73	72	TOYO	CELI	000RA21000370	42774	674	2	1000	0	10	10	80	9999	5	5	10	80	0	9999	9
74	72	VOLK	CONV	0001522245211	24359	972	1	16000	4000	10	30	60	574	60	5	5	30	0	574	2
75	72	VOLK	SEDA	0001122600980	13241	672	1	5000	8000	60	30	10	574	0	60	20	20	0	574	1
76	71	AMER	AMBA	A1A857N173033	16729	372	2	6000	6000	80	10	10	374	30	40	0	0	30	374	2
77	71	BUIC	SKYL	433691H188669	15094	871	1	5000	5000	50	25	25	574	80	5	5	5	5	374	3
78	71	BUIC	ELEC	484391Y146817	51338	573	2	8000	0	15	25	60	374	25	25	0	50	0	374	4
79	71	CADI	DEVI	683491E372104	22285	871	1	5000	6000	80	10	10	474	0	50	0	10	40	474	2

LISTING OF TEST VEHICLE USE AND MAINTENANCE DATA

VEH	YR	MAKE	MODL	VIN	ODOM	PRDATE	N	VMT1	VMT2	%C	%S	%F	LOC	%W	%G	%T	%V	%B	LTU	W
80	71	CHEV	VEGA	141771U286450	25785	874	2	5000	0	10	30	60	874	0	10	0	90	0	874	2
81	71	CHEV	CHEL	136371B140580	22678	771	1	7000	7000	80	10	10	674	0	50	30	20	0	674	2
82	71	CHEV	CAPR	166471T223930	44749	871	1	15000	20000	50	30	20	574	0	40	10	30	20	574	2
82R	71	CHEV	CAPR	166471T223930	45786	871	1	15000	20000	50	30	20	874	0	40	10	30	20	874	2
83	71	CHEV	CHEL	136361B239142	40675	771	1	16000	11000	70	10	20	174	35	20	20	20	5	773	2
84	71	CHEV	IMPA	164391T136468	17952	371	1	6000	6000	50	30	20	574	15	10	0	75	0	9999	9
85	71	CHEV	CAPR	166391T108525	43547	671	2	12000	12000	70	15	15	474	70	5	10	15	0	474	2
86	71	CHRY	NEWP	CS23T1C231615	14738	571	1	5000	6000	20	70	10	774	10	40	0	40	10	574	1
87	71	DATS	0S1	0PL510-286709	27535	874	1	6000	10000	20	70	10	874	70	30	0	0	0	874	1
88	71	DODG	CHAR	WH23G1A196426	22743	871	1	9000	7000	50	20	30	774	30	10	30	30	0	873	2
89	71	FORD	PINT	001T10X227600	48850	571	1	16000	16000	70	10	20	174	80	5	5	10	0	673	4
90	71	FORD	MAVE	001X91T308011	14295	971	1	5000	4000	30	25	45	574	20	10	10	60	0	574	2
91	71	FORD	TORI	001H43F166355	36040	1173	2	8000	0	40	30	30	674	0	50	50	0	0	674	2
92	71	FORD	GALA	001E54H132081	39034	1070	1	15000	8000	75	25	0	674	0	20	25	55	0	674	1
93	71	FORD	STAW	001E76H112995	71000	1070	1	15000	10000	50	40	10	9999	40	15	10	10	25	474	2
94	71	MERC	MARQ	0012765537253	39643	1173	2	4000	0	80	10	10	374	0	0	80	20	0	374	2
95	71	OLDS	CUTL	3425716135059	29880	871	1	10000	9000	25	25	50	174	10	20	20	25	25	174	2
96	71	OLDS	DELT	3546916135059	34692	1271	1	10000	10000	30	10	15	9999	60	10	20	5	5	9999	9
97	71	PLYM	VALI	VL29C183091 00	31994	471	1	10000	10000	60	40	0	1173	50	20	0	30	0	1173	2
98	71	PLYM	FURY3	PM41G1F185841	67460	374	2	2000	0	50	15	35	174	0	0	0	0	99	9999	9
98R	71	PLYM	FURY3	PM41G1F185841	70434	374	2	2000	0	50	15	35	174	0	0	0	0	99	9999	9
99	71	PO.[illegible]	LEMA	235371P160868	26543	671	1	7000	11000	80	0	20	374	20	40	20	20	0	873	2
100	71	PO.[illegible]	SAFA	262351234498 6	49483	874	2	1000	0	10	10	80	9999	40	10	10	30	10	9999	9
101	71	TOYO	CORO	000KE26614633	32336	371	1	8000	10000	90	8	2	574	0	75	15	10	0	1273	1
102	71	VOLK	SEDA	0C01113047092	30184	871	1	10000	10000	10	90	0	774	90	5	5	0	0	1173	2
103	70	BUIC	RIVE	494870H919988	72697	970	2	15000	18000	85	10	5	274	50	20	0	30	0	274	4
104	70	CHEV	CHEL	131360B105883	30808	1171	2	5000	5000	85	10	5	674	85	5	8	2	0	674	2
105	70	CHEV	MALI	136670B210957	46916	174	2	6000	0	60	20	20	374	70	0	0	15	15	374	2
106	70	CHEV	IMPA	164470T120897	25388	1069	1	5000	5000	60	20	20	274	0	20	0	20	0	574	2
107	70	CHEV	IMPA	164470T104791	46094	773	2	5000	0	50	0	50	174	15	25	20	40	0	674	4
108	70	CHEV	BISC	154690T189328	44726	872	2	10000	10000	50	40	10	474	50	25	0	25	0	474	3
109	70	CHEV	IMPA	164470 T216200	42238	1070	1	10000	10000	50	10	40	574	60	30	5	5	0	574	3
110	70	DODG	CHAR	XH29N06183286	25603	774	2	1000	0	85	10	5	674	75	5	0	20	0	9999	9
111	70	FORD	MAVR	000X91T144087	45445	669	1	3000	6000	10	70	20	674	5	30	2	43	0	674	4
112	70	FORD	FALC	000B26F184045	62823	370	1	12000	13000	70	15	15	1073	50	10	10	20	10	1072	2
112R	70	FORD	FALC	000B26F184045	66443	370	1	12000	13000	70	15	15	1073	50	10	10	20	10	1072	1
113	70	FORD	GALA	000E56H257928	74127	670	1	10000	20000	10	50	40	574	5	10	30	50	5	174	2
114	70	FORD	LTD	000E75H210383	35363	972	2	5000	5000	50	0	50	874	0	25	25	25	25	874	2
115	70	FORD	LTD	000E62Y157983	46821	770	1	10000	10000	20	70	0	574	80	10	10	0	0	574	2
116	70	MERC	MARQ	000B63K526819	39958	670	1	12000	10000	20	30	50	574	5	5	5	85	0	574	2

LISTING OF TEST VEHICLE USE AND MAINTENANCE DATA

VEH	YR	MAKE	MODL	VIN	ODOM	PRDATE	N	VMT1	VMT2	%C	%S	%F	LOC	%W	%G	%T	%V	%B	LTU	W
117	70	OLDS	F85V	348550M132506	66938	969	1	20000	18000	30	10	60	574	0	10	10	0	80	174	2
118	70	OLDS	SEDA	384390M254497	43022	169	1	8000	8000	90	10	0	9999	0	50	50	0	0	9999	9
119	70	PLYM	FURY3	PM41[illegible]0F118776	39569	374	1	10000	10000	25	0	75	674	0	40	35	25	0	674	2
120	70	PLYM	DUST	VL29G0R391779	71206	670	1	20000	20000	20	20	60	874	75	15	8	0	2	874	1
121	70	PO[illegible]	FIRE	224870N131205	63234	470	1	10000	15000	50	50	50	674	75	25	25	25	0	474	2
122	70	PO[illegible]	CATA	252390E144300	35533	170	1	8000	8000	70	15	15	674	50	20	30	0	0	473	2
123	70	TOYO	CORO	000KE11032258	14973	270	1	3000	3000	99	0	0	474	0	99	0	0	0	174	1
124	70	VOLK	2DRS	0001102367290	23239	673	2	8000	0	80	10	10	1073	80	10	5	5	0	1173	2
125	69	AMER	AMBA	A9A857M287747	41411	1271	2	10000	10000	40	30	30	574	0	35	15	15	35	673	1
126	69	BUIC	LESA	452699Y108220	66293	1068	1	12000	11000	30	40	30	474	10	30	40	10	0	1073	2
127	69	CHEV	NOVA	113279W369807	50719	174	1	8000	6000	80	10	10	774	80	10	5	5	0	374	2
128	69	CHEV	CHEL	134699G328566	98266	369	1	10000	10000	35	25	40	774	0	10	40	50	0	1173	1
129	69	CHEV	IMPA	164479I164216	20561	969	1	5000	5000	90	0	10	374	80	10	0	5	5	374	2
130	69	CHEV	CAPR	166399J302065	33829	969	1	5000	6000	50	25	25	1274	30	10	10	40	10	1274	3
131	69	CHEV	CAPR	166399I117357	64409	370	2	15000	20000	80	10	10	474	5	40	45	5	5	9999	9
132	69	CHEV	IMPA	164699Z062396	66490	369	1	8000	10000	70	20	10	574	40	20	20	20	0	574	1
133	69	CHRY	NEWP	CE4169F284522	40453	1269	1	6000	8000	15	20	65	674	50	10	20	20	0	772	2
134	69	DODG	DART	LH41H98347589	74478	1173	2	8000	0	60	20	20	774	60	0	0	40	0	1273	1
135	69	FORD	FAIR	009H30F159539	63513	269	1	10000	10000	80	10	10	474	80	0	0	10	10	474	2
136	69	FORD	GALA	009E55E137997	43925	1268	1	9000	6000	30	0	70	474	70	20	0	10	0	174	2
137	69	FORD	LTD	009E66H225755	48379	1169	1	12000	9000	75	15	10	374	75	25	0	0	0	973	2
138	69	FORD	MUST	009T02H193285	48773	772	2	16000	12000	60	20	20	474	10	10	20	50	10	474	3
139	69	FORD	STAW	009E76Y225765	56343	173	2	5000	4000	25	25	50	674	0	15	10	25	50	9999	9
140	69	MERC	COUG	009F93H524941	63208	1068	1	5000	5000	20	50	30	874	20	20	0	60	0	174	2
141	69	OLDS	DELT	366479E184689	49810	970	1	8000	8000	66	16	18	874	0	30	10	30	30	774	4
142	69	PLYM	VIP	PP43F9F262970	45967	570	1	10000	10000	85	10	5	1273	85	0	0	0	15	873	2
143	69	PO[illegible]	TEMP	235379G107779	52294	1170	2	10000	10000	75	5	20	174	60	10	10	20	0	9999	9
144	69	PO[illegible]	EXEC	256399E149973	63820	673	2	20000	0	75	15	10	474	80	5	0	10	0	474	3
145	69	VOLK	SEDA	0001191071560	35657	869	1	6000	6000	25	25	50	574	0	10	0	90	0	1073	2
146	68	AMER	REBE	AB8197M342541	80354	1068	1	10000	10000	25	30	45	9999	25	5	25	45	0	9999	9
147	68	BUIC	SKYL	444398B109397	44593	1167	1	8000	8000	75	10	15	1173	0	50	25	25	0	1173	2
148	68	CADI	CALA	00000N8251961	51631	468	1	8000	8000	30	50	20	174	0	25	0	75	0	474	1
149	68	CHEV	CHEL	135698B106527	59310	874	2	10000	17000	25	25	50	874	50	20	20	10	0	873	4
150	68	CHEV	BELA	156358T204652	47773	1171	2	10000	10000	60	20	20	474	75	10	10	5	0	474	2
151	68	CHEV	IMPA	164478T284651	85467	868	1	14000	14000	30	50	20	574	50	30	20	0	0	1173	2
152	68	CHEV	BELA	156118T196874	72080	568	1	10000	10000	20	50	30	674	70	0	0	30	0	973	2
152R	68	CHEV	BELA	156118T196874	73402	568	1	10000	10000	20	50	30	874	70	0	0	30	0	874	1
153	68	CHEV	STAW	164458T162604	58605	968	1	7000	7000	50	25	25	9999	75	5	10	10	0	9999	9
154	68	DODG	CORO	WH458A288479	63072	668	1	12000	11000	40	30	30	674	3	30	10	57	0	673	2
155	68	FORD	STAW	008A38C291579	68472	868	1	15000	15000	50	25	25	474	60	20	0	20	0	474	2

LISTING OF TEST VEHICLE USE AND MAINTENANCE DATA

VEH	YR	MAKE	MODL	VIN	ODOM	PRDATE	N	VMT1	VMT2	%C	%S	%F	LOC	%W	%G	%T	%V	%B	LTU	W
156	68	FORD	MUST	008T01C102435	40639	172	2	5000	4000	50	25	25	773	50	25	0	25	0	272	2
157	68	FORD	LTD	008E62F116792	59936	868	1	10000	10000	80	0	20	774	80	20	0	0	0	774	3
158	68	FORD	GALA	008E54Y215181	94110	971	2	5000	4000	90	5	5	1273	80	10	10	0	0	1273	3
159	68	MERC	COUG	008F91F558859	50264	173	2	12000	12000	45	45	10	574	70	10	10	5	5	574	2
160	68	OLDS	CUTL	342694110258U	82493	1172	2	15000	15000	75	15	10	1273	50	30	10	10	0	574	2
161	68	PLYM	FURY3	PM41F8R168117	26318	973	2	5000	0	60	30	10	274	60	10	20	10	0	274	2
162	68	PONT	CATA	252698E207299	60009	574	2	10000	8000	50	10	40	774	20	50	20	10	0	674	4
163	68	VOLK	SEDZ	0000118363167	72714	168	1	9000	9000	20	70	10	674	80	15	0	5	5	674	1
164	67	AMER	REBE	A7KA60F193664	32841	1067	1	6000	6000	95	5	0	774	90	5	5	0	0	774	2
165	67	BUIC	LESA	452697Y144596	84900	567	1	8000	12000	90	5	5	574	70	20	10	0	0	574	4
166	67	CADI	DEVI	68367F7292616	84866	470	2	14000	14000	20	55	25	774	13	25	2	60	0	474	2
167	67	CHEV	BISC	153117Y120502	59243	670	2	4000	3000	80	10	10	1273	80	5	5	10	0	1273	4
168	67	CHEV	IMPA	164697Z149069	23381	1067	1	5000	4000	15	35	50	174	50	15	10	25	0	772	4
169	67	CHEV	CHEL	136397B178394	62122	567	1	8000	10000	70	5	25	474	40	41	20	0	0	474	1
170	67	CHEV	MALI	136177B128140	65970	1267	1	10000	10000	80	10	10	574	10	20	30	40	0	1173	4
171	67	CHRY	NEWP	CF41G7612787	55040	674	2	9000	9000	65	30	5	674	80	14	1	5	0	874	2
172	67	DODG	DART	DLP23D1220825	65936	474	2	2000	0	70	15	15	574	0	60	20	5	15	574	3
173	67	FORD	GALA	007E55C245916	78241	1072	2	8000	0	95	0	5	174	80	10	10	0	0	1273	4
174	67	FORD	GALA	007E55C206581	71448	672	2	8000	8000	50	25	25	1273	90	10	0	0	0	1273	3
175	67	FORD	GALA	007E55B105661	66008	1072	2	7000	7000	25	50	25	1273	0	25	50	25	0	1273	2
176	67	MERC	MONR	007247B511903	20131	1067	1	17000	17000	30	40	30	674	80	5	5	10	0	674	2
177	67	OLDS	DELT	386697M158339	85959	169	2	14000	12000	75	10	15	574	35	40	20	5	0	1173	2
178	67	PLYM	FURY3	PM23B7611570 3	81412	670	2	15000	15000	90	5	5	1173	70	20	0	10	0	9973	2
179	67	PONT	TEMP	235177G109877	73544	768	2	10000	10000	40	40	20	174	80	10	0	10	0	672	3
180	67	VOLK	SEDZ	0000117268554	57378	1266	1	15000	12000	65	25	10	374	50	0	40	5	5	1073	2

LISTING OF FEDERAL TEST PROCEDURE RESULTS
ON INDIVIDUAL VEHICLES

NEWARK, N.J.

VEHICLE NUMBER	YEAR MAKE MODEL CID	TEST TYPE	HC	CO	CO2	NOXC	FUEL ECONOMY	LIGHT HYDROCARBONS: METHANE (CH4)	ETHANE (C2H6)	PROPANE (C3H8)	C2 UNSATURATES ETHYLENE+ACETYLENE (C2H4)	(C2H2)	ALIPHATIC ALDEHYDES (R-CHO)
1	1974 BUIC REGA 350	COLD TRANS	1.32	37.86	803.84	2.09	10.23	.07	.05	0.00		.26	
		COLD STAB	1.31	12.09	788.70	1.51	10.93	.03	.03	0.00		.16	
		HOT TRANS	1.67	23.58	689.25	2.15	12.13	.02	.02	0.00		.14	
IHC =	20 PPM HEXANE	HOT STAB	1.42	15.43	757.37	1.92	11.40	.02	.03	0.00		.16	
ICO =	.30 PERCENT CO												
		1972 FTP	1.31	24.43	795.95	1.79	10.58	.05	.04	0.00		.21	
OTHER TESTS: MODAL		1975 FTP	1.41	20.53	764.68	1.80	11.07	.03	.03	0.00		.18	
		HOT START	1.54	16.72	724.76	1.77	11.74	.02	.02	0.00		.15	
		HFET	.64	4.40	462.80	1.70	18.81						
2	1974 CHEV CHEL 350	COLD TRANS	2.38	34.94	772.17	1.89	10.63	.05	.04	0.00		.23	
		COLD STAB	1.82	19.30	816.47	1.06	10.41	.03	.03	0.00		.17	
		HOT TRANS	2.54	19.12	696.77	1.62	12.10	.03	.03	0.00		.16	
IHC =	200 PPM HEXANE	HOT STAB	1.85	17.76	742.74	1.73	10.87	.03	.03	0.00		.17	
ICO =	.15 PERCENT CO												
		1972 FTP	2.09	26.79	795.27	1.46	10.52	.04	.04	0.00		.20	0.00
OTHER TESTS: MODAL		1975 FTP	2.13	22.20	774.69	1.38	10.87	.04	.03	0.00		.18	0.00
		HOT START	2.18	17.93	741.59	1.34	11.43	.03	.03	0.00		.17	0.00
		HFET	.72	6.36	517.40	1.35	16.76						
3	1974 CHEV NOVA 350	COLD TRANS	3.26	23.54	669.33	2.17	12.38	.04	.04	0.00		.24	.41
		COLD STAB	1.99	14.40	659.85	1.17	12.89	.02	.04	0.00		.17	.41
		HOT TRANS	2.52	9.66	596.60	2.01	14.32	.02	.03	0.00		.17	.33
IHC =	750 PPM HEXANE	HOT STAB	2.13	12.99	655.70	1.99	13.00	.02	0.00	0.00		.18	.38
ICO =	.15 PERCENT CO												
		1972 FTP	2.60	18.78	664.39	1.65	12.64	.03	.04	0.00		.20	.41
OTHER TESTS: MODAL		1975 FTP	2.40	14.99	644.54	1.60	13.14	.03	.04	0.00		.18	.39
		HOT START	2.31	11.39	627.41	1.61	13.60	.02	.01	0.00		.17	.36
		HFET	1.04	4.61	472.90	1.64	18.36						

EMISSION RESULTS EXPRESSED IN GRAMS/MILE - FUEL ECONOMY IN MILES/GALLON

LISTING OF FEDERAL TEST PROCEDURE RESULTS
ON INDIVIDUAL VEHICLES

NEWARK, N.J.

VEHICLE NUMBER	YEAR MAKE MODEL CID	TEST TYPE	HC	CO	CO2	NOXC	FUEL ECONOMY	*----------LIGHT HYDROCARBONS----------* METHANE (CH4)	ETHANE (C2H6)	PROPANE (C3H8)	C2 UNSATURATES ETHYLENE (C2H4)	+ACETYLENE (C2H2)	ALIPHATIC ALDEHYDES (R-CHO)
4	1974 DODG DART 198	COLD TRANS	2.82	24.38	433.40	2.77	18.47	.04	.04	0.00		.20	.23
		COLD STAB	2.01	19.72	443.04	1.83	18.48	.04	.04	0.00		.21	.20
		HOT TRANS	2.11	13.58	404.12	2.87	20.54	.04	.03	0.00		.18	.23
IHC =	150 PPM HEXANE	HOT STAB	1.91	18.91	431.00	2.54	19.01	.04	.04	0.00		.20	.19
ICO =	1.00 PERCENT CO												
		1972 FTP	2.40	21.95	438.43	2.28	18.47	.04	.04	0.00		.21	.22
OTHER TESTS: MODAL		1975 FTP	2.20	19.01	430.44	2.31	18.99	.04	.04	0.00		.20	.22
		HOT START	2.01	16.36	418.13	2.31	19.71	.04	.03	0.00		.19	.21
		HFET	1.89	3.85	307.50	2.08	27.97						
5	1974 FORD MAVE 250	COLD TRANS	6.18	30.10	612.26	3.18	13.07	.07	.07	0.00		.17	.28
		COLD STAB	1.56	9.34	610.18	1.87	14.09	.03	.04	0.00		.18	.23
		HOT TRANS	2.49	12.06	517.49	2.64	16.30	.03	.04	0.00		.16	.24
IHC =	40 PPM HEXANE	HOT STAB	1.45	9.13	583.20	2.92	14.74	.03	.04	0.00		.17	.23
ICO =	.50 PERCENT CO												
		1972 FTP	3.77	19.27	611.17	2.50	13.58	.05	.05	0.00		.17	.25
OTHER TESTS: MODAL		1975 FTP	2.76	14.35	585.32	2.35	14.39	.04	.04	0.00		.17	.24
		HOT START	1.95	10.53	551.75	2.22	15.45	.03	.04	0.00		.17	.23
		HFET	1.48	11.15	376.70	2.07	22.25						
6	1974 FORD STAW 400	COLD TRANS	2.85	20.54	862.06	3.61	9.82	.05	.08	0.00		.28	
		COLD STAB	1.66	5.91	870.54	2.11	10.03	.03	.04	0.00		.21	
		HOT TRANS	2.14	13.98	738.58	3.01	11.57	.04	.05	0.00		.23	
IHC =	50 PPM HEXANE	HOT STAB	1.69	5.37	818.75	3.31	10.66	.02	.03	0.00		.20	
ICO =	.15 PERCENT CO												
		1972 FTP	2.23	12.91	866.48	2.83	9.93	.04	.06	0.00		.25	
OTHER TESTS: MODAL		1975 FTP	2.04	11.12	832.79	2.66	10.36	.03	.05	0.00		.23	
		HOT START	1.91	9.49	780.37	2.59	11.08	.03	.04	0.00		.22	
		HFET	1.26	3.55	518.00	2.62	16.82						

EMISSION RESULTS EXPRESSED IN GRAMS/MILE - FUEL ECONOMY IN MILES/GALLON

LISTING OF FEDERAL TEST PROCEDURE RESULTS
ON INDIVIDUAL VEHICLES

NEWARK, N.J.

VEHICLE NUMBER	YEAR MAKE MODEL CID	TEST TYPE	HC	CO	CO2	NOXC	FUEL ECONOMY	METHANE (CH4)	ETHANE (C2H6)	PROPANE (C3H8)	C2 UNSATURATES ETHYLENE+ACETYLENE (C2H4) (C2H2)	ALIPHATIC ALDEHYDES (R-CHO)
								----------LIGHT HYDROCARBONS----------				
7	1974 OLDS CUTL 350	COLD TRANS	2.47	14.31	759.81	2.86	11.23					
		COLD STAB	1.55	8.49	783.32	1.85	11.07					
		HOT TRANS	2.95	8.52	657.16	2.55	13.05					
IHC =	60 PPM HEXANE	HOT STAB	1.53	6.81	751.76	2.62	11.57					
ICO =	.20 PERCENT CO											
		1972 FTP	1.99	11.28	772.07	2.33	11.15	0.00	0.00	0.00	0.00	0.00
OTHER TESTS: MODAL		1975 FTP	2.12	9.79	744.06	2.25	11.59	0.00	0.00	0.00	0.00	0.00
		HOT START	2.21	7.62	706.48	2.15	12.23	0.00	0.00	0.00	0.00	0.00
		HFET	1.18	3.33	479.30	2.10	18.18					
8	1974 PLYM FRY3 360	COLD TRANS	4.28	72.81	749.08	2.08	10.12	.14	.11	0.00	.44	.21
		COLD STAB	3.36	85.45	719.49	2.01	10.28	.12	.07	0.00	.35	.22
		HOT TRANS	2.86	45.57	656.82	3.00	12.03	.08	.07	0.00	.30	.25
IHC =	120 PPM HEXANE	HOT STAB	2.87	79.58	715.73	1.91	10.44	.11	.08	0.00	.35	.23
ICO =	4.60 PERCENT CO											
		1972 FTP	3.65	79.40	733.65	2.04	10.20	.13	.09	0.00	.39	.22
OTHER TESTS: MODAL		1975 FTP	3.26	71.97	708.48	2.30	10.67	.11	.08	0.00	.36	.23
		HOT START	2.86	63.30	687.53	2.62	11.15	.10	.07	0.00	.33	.24
		HFET	1.59	11.43	451.50	1.19	18.68					
9	1974 PONT HO N 400	COLD TRANS	3.93	57.25	804.37	3.44	9.79	.11	.10	0.00	.33	.18
		COLD STAB	3.30	43.40	734.68	2.79	10.91	.08	.07	0.00	.26	.24
		HOT TRANS	3.51	19.57	661.36	4.57	12.65	.05	.07	0.00	.22	.28
IHC =	120 PPM HEXANE	HOT STAB	3.19	34.48	729.08	3.16	11.19	.07	.07	0.00	.25	.26
ICO =	1.10 PERCENT CO											
		1972 FTP	3.6[illegible]	5[illegible].[illegible]3	76[illegible].04	3.10	10.34	.10	.08	0.00	.30	.21
OTHER TESTS: MODAL		1975 FTP	3.35	39.75	729.02	3.41	11.07	.08	.08	0.00	.27	.24
		HOT START	3.[illegible]5	27.34	696.57	3.71	11.84	.06	.07	0.00	.23	.27
		HFET	1.91	8.51	508.80	1.77	16.86					

EMISSION RESULT EXPRESSED IN GRAMS/MILE - FUEL ECONOMY IN MILES/GALLON

LISTING OF FEDERAL TEST PROCEDURE RESULTS
ON INDIVIDUAL VEHICLES

NEWARK, N.J.

VEHICLE NUMBER	YEAR MAKE MODEL CID	TEST TYPE	HC	CO	CO2	NOXC	FUEL ECONOMY	*----------LIGHT HYDROCARBONS----------* METHANE (CH4)	ETHANE (C2H6)	PROPANE (C3H8)	C2 UNSATURATES ETHYLENE+ACETYLENE (C2H4)	(C2H2)	ALIPHATIC ALDEHYDES (R-CHO)
10	1974 VOLK SEDA 97	COLD TRANS	4.82	30.06	298.61	1.93	24.58	.08	.07	0.00		.30	.19
		COLD STAB	3.21	23.63	311.00	1.27	24.77	.07	.07	0.00		.28	.17
		HOT TRANS	3.51	18.16	267.49	1.62	28.90	.07	0.00	0.00		.03	.16
IHC =	240 PPM HEXANE	HOT STAB	2.92	23.76	315.52	1.77	24.51	.07	.07	0.00		.30	.17
ICO =	4.40 PERCENT CO												
		1972 FTP	3.98	26.71	305.07	1.59	24.68	.08	.07	0.00		.29	.18
OTHER TESTS:	MODAL	1975 FTP	3.62	23.46	296.58	1.50	25.73	.07	.05	0.00		.22	.17
		HOT START	3.20	21.08	292.53	1.40	26.43	.07	.04	0.00		.17	.17
		HFET	.84	3.69	212.10	1.31	40.23						
11	1973 AMER MATA 360	COLD TRANS	7.24	35.18	656.16	5.82	12.09	.06	.06	0.00		.28	.61
		COLD STAB	2.43	30.47	627.75	2.45	12.99	.06	.04	0.00		.23	.46
		HOT TRANS	2.81	17.67	597.66	4.38	13.99	.04	.04	0.00		.21	.44
IHC =	70 PPM HEXANE	HOT STAB	2.35	28.40	616.01	5.35	13.28	.05	.04	0.00		.22	.45
ICO =	2.20 PERCENT CO												
		1972 FTP	4.73	32.73	641.35	4.06	12.54	.06	.05	0.00		.25	.53
OTHER TESTS:	MODAL	1975 FTP	3.52	27.95	625.39	3.67	13.04	.05	.05	0.00		.23	.48
		HOT START	2.57	23.26	607.23	3.34	13.61	.05	.04	0.00		.22	.45
		HFET	1.05	4.97	494.30	4.19	17.56						
12	1973 BUIC CNTY 350	COLD TRANS	3.45	41.83	664.23	3.45	11.98	.08	.06	0.00		.25	.39
		COLD STAB	2.48	39.13	614.99	1.92	12.97	.08	.05	0.00		.21	.36
		HOT TRANS	2.55	18.60	724.18	3.84	11.66	.04	.04	0.00		.18	.36
IHC =	460 PPM HEXANE	HOT STAB	2.39	34.34	602.20	3.16	13.37	.07	.05	0.00		.21	.36
ICO =	2.40 PERCENT CO												
		1972 FTP	2.95	40.42	638.56	2.65	12.48	.08	.05	0.00		.23	.37
OTHER TESTS:	NEW JERSEY	1975 FTP	2.70	34.68	654.92	2.75	12.38	.07	.05	0.00		.21	.36
	MODAL	HOT START	2.47	26.80	660.59	2.77	12.49	.06	.04	0.00		.19	.36
		HFET	1.23	6.13	440.20	3.50	19.56						

N.J. IHC = F PPM HEXANE
N.J. ICO = F PERCENT CO

EMISSION RESULTS EXPRESSED IN GRAMS/MILE - FUEL ECONOMY IN MILES/GALLON

LISTING OF FEDERAL TEST PROCEDURE RESULTS
ON INDIVIDUAL VEHICLES

NEWARK, N.J.

VEHICLE NUMBER	YEAR MAKE MODEL CID	TEST TYPE	HC	CO	CO2	NOXC	FUEL ECONOMY	METHANE (CH4)	ETHANE (C2H6)	PROPANE (C3H8)	C2 UNSATURATES ETHYLENE (C2H4)	C2 UNSATURATES ACETYLENE (C2H2)	ALIPHATIC ALDEHYDES (R-CHO)
								----------LIGHT HYDROCARBONS----------					
13	1973 BUIC ELEC 455	COLD TRANS	3.38	26.50	885.91	3.47	9.46	.06	.08	0.00		.29	.16
		COLD STAR	2.83	13.66	874.07	2.37	9.81	.05	.07	0.00		.31	.34
		HOT TRANS	2.80	10.50	773.96	3.64	11.10	.03	.04	0.00		.22	.37
IHC =	430 PPM HEXANE	HOT STAR	2.85	21.70	850.23	3.18	9.93	.05	.07	0.00		.28	.43
ICO =	.20 PERCENT CO												
		1972 FTP	3.09	19.81	879.73	2.90	9.64	.05	.07	0.00		.30	.26
OTHER TESTS: MODAL		1975 FTP	2.93	15.44	849.19	2.94	10.05	.04	.06	0.00		.28	.31
		HOT START	2.83	16.34	813.72	3.11	10.46	.04	.06	0.00		.25	.40
		HEET	1.56	3.80	537.40	1.24	16.19						
14	1973 CADI FLEE 472	COLD TRANS	4.06	33.23	918.41	4.27	9.02	.06	.07	0.00		.30	.30
		COLD STAR	4.38	55.34	786.96	2.48	10.00	.08	.07	0.00		.29	.41
		HOT TRANS	3.88	22.83	755.52	4.06	11.04	.05	.08	0.00		.23	.31
IHC =	600 PPM HEXANE	HOT STAR	3.83	54.44	807.54	3.92	9.80	.08	.06	0.00		.27	.41
ICO =	1.00 PERCENT CO												
		1972 FTP	4.23	44.76	849.88	3.34	9.51	.07	.07	0.00		.29	.36
OTHER TESTS: MODAL		1975 FTP	4.18	41.92	805.44	3.28	10.03	.07	.07	0.00		.27	.36
		HOT START	3.85	39.31	782.64	3.28	10.36	.07	.07	0.00		.25	.36
		HEET	1.28	6.57	589.60	2.80	14.69						
15	1973 CAPR 2[illegible] 122	COLD TRANS	3.11	28.51	540.17	6.50	14.92	.08	.06	0.00		.35	.18
		COLD STAR	2.47	29.58	272.05	1.99	27.18	.10	.06	0.00		.32	.14
		HOT TRANS	1.93	16.20	253.85	3.68	31.12	.06	.05	0.00		.24	.17
IHC =	250 PPM HEXANE	HOT STAR	2.34	27.56	265.17	5.97	28.07	.09	.07	0.00		.31	.13
ICO =	6.50 PERCENT CO												
		1972 FTP	2.77	29.12	400.39	4.15	19.51	.09	.06	0.00		.33	.16
OTHER TESTS: MODAL		1975 FTP	2.45	25.76	322.21	3.38	23.96	.08	.06	0.00		.30	.16
		HOT START	2.12	22.28	254.65	2.82	29.45	.08	.06	0.00		.27	.15
		HEET	3.03	5.39	236.50	3.02	34.86						

EMISSION RESULTS EXPRESSED IN GRAMS/MILE - FUEL ECONOMY IN MILES/GALLON

LISTING OF FEDERAL TEST PROCEDURE RESULTS
ON INDIVIDUAL VEHICLES

NEWARK, N.J.

VEHICLE NUMBER	YEAR MAKE MODEL CID	TEST TYPE	HC	CO	CO2	NOXC	FUEL ECONOMY	*----------LIGHT HYDROCARBONS----------* METHANE (CH4)	ETHANE (C2H6)	PROPANE (C3H8)	C2 UNSATURATES ETHYLENE+ACETYLENE (C2H4)	(C2H2)	ALIPHATIC ALDEHYDES (R-CHO)
16	1973 CHEV VEGA 140	COLD TRANS	2.96	40.44	426.80	3.43	17.76	.04	.04	0.00		.16	.16
		COLD STAB	1.49	12.83	387.80	3.03	21.51	.03	.03	0.00		.14	.17
		HOT TRANS	1.40	9.90	367.33	3.57	22.92	.02	.03	0.00		.11	.14
IHC =	120 PPM HEXANE	HOT STAB	1.43	11.54	368.87	3.15	22.67	.03	.04	0.00		.14	.15
ICO =	.70 PERCENT CO												
		1972 FTP	2.19	26.65	406.47	3.22	19.53	.04	.03	0.00		.15	.16
OTHER TESTS: MODAL		1975 FTP	1.76	17.72	390.24	3.26	20.95	.03	.03	0.00		.14	.16
		HOT START	1.42	10.76	368.13	3.25	22.78	.03	.03	0.00		.13	.15
		HFET	.73	3.18	231.80	2.73	37.12						
17	1973 CHEV NOVA 250	COLD TRANS	2.51	18.93	571.20	2.90	14.58	.04	.03	0.00		.15	.25
		COLD STAB	1.52	7.85	513.76	1.36	16.72	.01	.02	0.00		.10	.25
		HOT TRANS	2.05	9.94	457.52	2.57	18.50	.02	.02	0.00		.11	.25
IHC =	450 PPM HEXANE	HOT STAB	1.42	9.24	510.82	2.66	16.75	.01	.02	0.00		.10	.23
ICO =	1.10 PERCENT CO												
		1972 FTP	2.00	13.16	541.25	2.10	15.62	.02	.02	0.00		.13	.25
OTHER TESTS: MODAL		1975 FTP	1.87	10.70	510.24	2.01	16.65	.02	.02	0.00		.12	.25
		HOT START	1.72	9.58	485.31	1.92	17.55	.02	.02	0.00		.10	.24
		HFET	.75	3.17	333.40	2.32	26.05						
18	1973 CHEV CHEL 307	COLD TRANS	4.65	49.99	690.39	2.54	11.33	.08	.08	0.00		.32	.42
		COLD STAB	2.64	6.74	711.18	2.06	12.16	.03	.05	0.00		.24	.49
		HOT TRANS	2.65	16.26	617.58	3.02	13.62	.03	.05	0.00		.21	.42
IHC =	500 PPM HEXANE	HOT STAB	2.77	6.97	697.14	2.33	12.38	.03	.06	0.00		.24	.52
ICO =	.20 PERCENT CO												
		1972 FTP	3.60	27.45	701.23	2.29	11.74	.05	.07	0.00		.28	.46
OTHER TESTS: MODAL		1975 FTP	3.06	18.24	681.36	2.42	12.33	.04	.06	0.00		.25	.46
		HOT START	2.71	11.41	659.05	2.47	12.95	.03	.06	0.00		.23	.48
		HFET	1.02	9.94	450.50	2.25	18.91						

EMISSION RESULTS EXPRESSED IN GRAMS/MILE - FUEL ECONOMY IN MILES/GALLON

LISTING OF FEDERAL TEST PROCEDURE RESULTS
ON INDIVIDUAL VEHICLES

NEWARK, N.J.

VEHICLE NUMBER	YEAR MAKE MODEL CID	TEST TYPE	HC	CO	CO2	NOXC	FUEL ECONOMY	*----------LIGHT HYDROCARBONS----------* METHANE (CH4)	ETHANE (C2H6)	PROPANE (C3H8)	C2 UNSATURATES ETHYLENE (C2H4)	+ACETYLENE (C2H2)	ALIPHATIC ALDEHYDES (R-CHO)
19	1973 CHEV NOVA 350	COLD TRANS	6.40	40.56	624.48	3.27	12.53						
		COLD STAB	2.57	4.40	656.75	2.01	13.21						
		HOT TRANS	2.77	7.60	412.56	3.31	20.48						
IHC =	400 PPM HEXANE	HOT STAB	2.79	4.83	644.17	3.00	13.44						
ICO =	.30 PERCENT CO												
		1972 FTP	4.40	21.71	641.31	2.61	12.87						
OTHER TESTS: MODAL		1975 FTP	3.41	12.71	583.49	2.63	14.45						
		HOT START	2.78	6.16	533.31	2.54	16.08						
		HFET	1.35	6.62	408.10	2.75	20.99						
20	1973 CHEV BELA 350	COLD TRANS	2.41	244.[illegible]	626.07	2.21	8.73	.05	.07	0.00		.24	.32
		COLD STAB	2.13	222.60	637.62	1.10	8.93	.04	.05	0.00		.19	.32
		HOT TRANS	2.37	159.22	585.32	2.26	10.53	.03	.04	0.00		.16	.33
IHC =	80 PPM HEXANE	HOT STAB	2.14	174.15	626.47	2.03	9.79	.04	.04	0.00		.17	.35
ICO =	.30 PERCENT CO												
		1972 FTP	2.26	232.85	632.09	1.63	8.83	.05	.06	0.00		.21	.32
OTHER TESTS: MODAL		1975 FTP	2.25	239.71	620.97	1.64	9.27	.04	.05	0.00		.19	.32
		HOT START	2.25	167.36	606.77	1.65	10.13	.03	.04	0.00		.17	.34
		HFET	.82	64.[illegible]6	462.50	2.00	15.69						
21	1973 CHEV IMPA 350	COLD TRANS	2.96	38.17	708.61	2.87	11.41	.06	.08	0.00		.26	.28
		COLD STAB	1.90	21.24	692.66	1.62	12.12	.03	.05	0.00		.19	.35
		HOT TRANS	2.52	20.34	618.91	3.05	13.47	.04	.04	0.00		.20	.29
IHC =	150 PPM HEXANE	HOT STAB	1.82	18.30	681.10	2.64	12.40	.03	.04	0.00		.18	.39
ICO =	.30 PERCENT CO												
		1972 FTP	2.41	29.34	700.29	2.22	11.77	.04	.06	0.00		.23	.31
OTHER TESTS: MODAL		1975 FTP	2.29	24.48	675.82	2.27	12.30	.04	.05	0.00		.21	.32
		HOT START	2.15	19.28	651.33	2.35	12.89	.03	.04	0.00		.19	.34
		HFET	.84	6.09	462.40	2.04	18.70						

EMISSION RESULTS EXPRESSED IN GRAMS/MILE - FUEL ECONOMY IN MILES/GALLON

LISTING OF FEDERAL TEST PROCEDURE RESULTS
ON INDIVIDUAL VEHICLES

NEWARK, N.J.

VEHICLE NUMBER	YEAR MAKE MODEL CID	TEST TYPE	HC	CO	CO2	NOXC	FUEL ECONOMY	*----------LIGHT HYDROCARBONS----------* METHANE (CH4)	ETHANE (C2H6)	PROPANE (C3H8)	C2 UNSATURATES ETHYLENE (C2H4)	+ACETYLENE (C2H2)	ALIPHATIC ALDEHYDES (P-CHO)
22	1973 CHEV IMPA 350	COLD TRANS	3.03	47.47	694.46	3.62	11.40	.07	.08	0.00		.31	.16
		COLD STAB	2.48	56.95	662.07	1.79	11.69	.06	.05	0.00		.19	.26
		HOT TRANS	2.52	33.88	588.47	3.87	13.66	.04	.06	0.00		.21	.29
IHC =	250 PPM HEXANE	HOT STAB	2.49	55.88	652.15	3.32	11.87	.07	.06	0.00		.20	.38
ICO =	1.50 PERCENT CO												
		1972 FTP	2.74	52.41	677.57	2.67	11.55	.07	.06	0.00		.25	.21
OTHER TESTS: MODAL		1975 FTP	2.60	48.70	648.66	2.73	12.10	.06	.05	0.00		.22	.25
		HOT START	2.51	45.35	621.67	2.74	12.66	.06	.06	0.00		.21	.34
		HFET	1.13	8.14	463.00	3.37	18.51						
23	1973 CHEV STAW 350	COLD TRANS	3.82	72.92	795.04	2.33	9.63	.09	.05	0.00		.28	.24
		COLD STAB	1.78	21.07	808.24	1.57	10.48	.03	.03	0.00		.15	.31
		HOT TRANS	2.23	19.73	679.58	2.50	12.39	.04	.04	0.00		.19	.31
IHC =	100 PPM HEXANE	HOT STAB	1.74	19.16	765.60	2.14	11.08	.03	.19	0.00		.17	.31
ICO =	.40 PERCENT CO												
		1972 FTP	2.76	45.89	801.92	1.93	10.05	.05	.04	0.00		.21	.28
OTHER TESTS: MODAL		1975 FTP	2.32	31.10	770.42	1.98	10.74	.04	.03	0.00		.19	.30
		HOT START	1.97	18.95	724.43	1.98	11.67	.03	.12	0.00		.18	.31
		HFET	.19	5.66	520.90	2.13	16.73						
24	1973 CHPY NEWP 400	COLD TRANS	6.91	64.56	776.30	4.57	9.87	.17	.14	0.00		.58	.40
		COLD STAB	2.26	17.41	725.06	2.55	11.68	.06	.08	0.00		.29	.26
		HOT TRANS	2.68	16.79	627.27	4.38	13.40	.05	.06	0.00		.27	.25
IHC =	70 PPM HEXANE	HOT STAB	1.94	15.38	707.72	4.19	12.03	.05	.05	0.00		.25	.25
ICO =	6.00 PERCENT CO												
		1972 FTP	4.48	39.98	749.59	3.52	10.74	.11	.11	0.00		.43	.32
OTHER TESTS: MODAL		1975 FTP	3.33	26.95	708.93	3.47	11.65	.08	.09	0.00		.34	.28
		HOT START	2.29	16.06	669.21	3.33	12.65	.05	.06	0.00		.26	.25
		HFET	1.28	5.91	472.50	4.62	18.27						

EMISSION RESULTS EXPRESSED IN GRAMS/MILE - FUEL ECONOMY IN MILES/GALLON

LISTING OF FEDERAL TEST PROCEDURE RESULTS
ON INDIVIDUAL VEHICLES

NEWARK, N.J.

VEHICLE NUMBER	YEAR MAKE MODEL CID	TEST TYPE	HC	CO	CO2	NOXC	FUEL ECONOMY	METHANE (CH4)	ETHANE (C2H6)	PROPANE (C3H8)	C2 UNSATURATES ETHYLENE+ACETYLENE (C2H4) (C2H2)	ALIPHATIC ALDEHYDES (R-CHO)
								----------LIGHT HYDROCARBONS----------				
25	1973 DATS SEDA 71	COLD TRANS	2.75	18.13	285.10	2.06	27.54	.03	.03	0.00	.15	
		COLD STAB	.97	6.56	318.16	1.12	26.77	.02	.02	0.00	.10	
		HOT TRANS	1.29	8.99	254.90	1.84	32.56	.02	.02	0.00	.10	
IHC =	250 PPM HEXANE	HOT STAB	1.11	7.07	317.54	1.89	26.72	.02	.02	0.00	.13	
ICO =	1.00 PERCENT CO											
		1972 FTP	1.82	12.10	302.33	1.57	27.13	.02	.02	0.00	.12	
OTHER TESTS:	MODAL	1975 FTP	1.42	9.60	294.09	1.51	28.29	.02	.02	0.00	.11	
		HOT START	1.20	7.99	287.56	1.47	29.20	.02	.02	0.00	.12	
		HFET	.67	1.92	298.00	1.87	29.28					
26	1973 DODG DART 225	COLD TRANS	3.69	69.97	416.49	4.95	16.49	.13	.09	0.00	.34	.16
		COLD STAB	3.08	83.12	424.83	2.29	15.70	.11	.07	0.00	.30	.14
		HOT TRANS	2.65	58.70	373.40	2.96	18.72	.74	.06	0.00	.24	.14
IHC =	200 PPM HEXANE	HOT STAB	3.00	64.24	436.57	4.55	16.23	.10	.08	0.00	.29	.14
ICO =	.20 PERCENT CO											
		1972 FTP	3.37	76.83	420.84	3.57	16.07	.12	.08	0.00	.32	.15
OTHER TESTS:	NEW JERSEY	1975 FTP	3.09	73.75	409.08	3.02	16.60	.29	.07	0.00	.29	.15
	MODAL	HOT START	2.83	61.58	406.33	2.58	17.33	.41	.07	0.00	.26	.14
		HFET	1.31	11.61	288.30	3.98	28.57					
N.J. IHC =	125P PPM HEXANE											
N.J. ICO =	6.00F PERCENT CO											
26R	1973 DODG DART 225	COLD TRANS	2.79	16.07	469.33	6.02	17.63	.04	.05	0.00	.22	.33
		COLD STAB	1.45	3.55	475.70	2.96	18.27	.01	.02	0.00	.15	.33
		HOT TRANS	2.38	14.61	421.23	4.70	19.65	.03	.03	0.00	.17	.27
IHC =	200 PPM HEXANE	HOT STAB	1.63	2.07	476.70	5.53	18.30	.01	.03	0.00	.16	.37
ICO =	.20 PERCENT CO											
		1972 FTP	2.09	9.55	472.65	4.42	17.96	.03	.04	0.00	.19	.33
OTHER TESTS:	NEW JERSEY	1975 FTP	1.98	9.15	459.53	4.06	18.48	.02	.03	0.00	.17	.31
		HOT START	1.99	8.07	450.15	3.50	18.92	.02	.03	0.00	.17	.32
		HFET	1.01	2.22	285.80	4.08	30.34					
N.J. IHC =	0P PPM HEXANE											
N.J. ICO =	.05P PERCENT CO											

EMISSION RESULTS EXPRESSED IN GRAMS/MILE - FUEL ECONOMY IN MILES/GALLON

LISTING OF FEDERAL TEST PROCEDURE RESULTS
ON INDIVIDUAL VEHICLES

NEWARK, N.J.

VEHICLE NUMBER	YEAR MAKE MODEL CID	TEST TYPE	HC	CO	CO2	NOXC	FUEL ECONOMY	*----------LIGHT HYDROCARBONS----------* METHANE (CH4)	ETHANE (C2H6)	PROPANE (C3H8)	C2 UNSATURATES ETHYLENE+ACETYLENE (C2H4) (C2H2)	ALIPHATIC ALDEHYDES (R-CHO)
27	1973 DODG CHAR 318	COLD TRANS	4.28	61.95	650.06	5.01	11.66	.09	.10	0.00	.33	.23
		COLD STAB	2.47	24.92	640.18	2.71	12.92	.06	.08	0.00	.27	.26
		HOT TRANS	2.90	25.15	546.38	4.78	14.91	.05	.06	0.00	.24	.26
IHC =	200 PPM HEXANE	HOT STAB	2.41	21.45	631.30	4.60	13.19	.05	.07	0.00	.24	.25
ICO =	.50 PERCENT CO											
		1972 FTP	3.34	42.64	644.91	3.81	12.28	.07	.09	0.00	.30	.25
OTHER TESTS: MODAL		1975 FTP	2.96	32.60	616.62	3.75	13.11	.06	.08	0.00	.27	.25
		HOT START	2.65	23.22	590.65	3.67	13.97	.05	.06	0.00	.24	.25
		HFET	.62	16.35	402.70	4.77	20.62					
28	1973 FORD PINT 122	COLD TRANS	5.32	49.31	315.26	4.31	21.67	.11	.08	0.00	.34	.22
		COLD STAB	3.28	42.95	318.29	3.48	22.40	.09	.07	0.00	.29	.19
		HOT TRANS	2.59	21.83	311.34	4.52	25.08	.06	.05	0.00	.22	.24
IHC =	230 PPM HEXANE	HOT STAB	3.33	40.37	311.84	3.96	23.00	.09	.08	0.00	.29	.20
ICO =	4.20 PERCENT CO											
		1972 FTP	4.25	46.00	316.84	3.88	22.04	.10	.08	0.00	.31	.21
OTHER TESTS: MODAL		1975 FTP	3.51	38.50	315.77	3.93	22.91	.08	.07	0.00	.28	.21
		HOT START	2.98	31.50	311.60	3.96	23.95	.07	.07	0.00	.26	.22
		HFET	1.52	8.19	247.40	4.82	33.48					
29	1973 FORD PINT 122	COLD TRANS	2.72	44.57	397.94	4.15	18.62	.08	.07	0.00	.33	.20
		COLD STAB	1.99	38.63	357.31	2.37	20.92	.07	.05	0.00	.25	.19
		HOT TRANS	1.76	17.53	341.23	4.27	23.71	.06	.06	0.00	.26	.21
IHC =	250 PPM HEXANE	HOT STAB	1.89	36.29	341.41	3.81	21.95	.06	.05	0.00	.24	.16
ICO =	6.80 PERCENT CO											
		1972 FTP	2.34	41.48	376.76	3.22	19.75	.08	.06	0.00	.29	.19
OTHER TESTS: MODAL		1975 FTP	2.08	34.10	361.29	3.25	21.06	.07	.06	0.00	.27	.19
		HOT START	1.83	27.31	341.32	3.26	22.76	.06	.06	0.00	.25	.18
		HFET	.93	7.62	261.20	3.87	32.14					

EMISSION RESULTS EXPRESSED IN GRAMS/MILE - FUEL ECONOMY IN MILES/GALLON

LISTING OF FEDERAL TEST PROCEDURE RESULTS
ON INDIVIDUAL VEHICLES

NEWARK, N.J.

VEHICLE NUMBER	YEAR MAKE MODEL CID	TEST TYPE	HC	CO	CO2	NOXC	FUEL ECONOMY	METHANE (CH4)	ETHANE (C2H6)	PROPANE (C3H8)	C2 UNSATURATES ETHYLENE+ACETYLENE (C2H4) (C2H2)	ALIPHATIC ALDEHYDES (R-CHO)
								----------LIGHT HYDROCARBONS----------				
30	1973 FORD MAVE 302	COLD TRANS	6.19	73.33	596.74	1.30	12.13	.17	.14	0.00	.57	.14
		COLD STAB	3.35	42.16	634.81	1.23	12.47	.09	.08	0.00	.30	.24
		HOT TRANS	2.94	38.18	581.42	1.19	13.64	.11	.07	0.00	.35	.19
IHC = 400 PPM HEXANE		HOT STAB	3.09	49.79	603.38	1.19	12.84	.10	.06	0.00	.33	.23
ICO = 2.50 PERCENT CO												
		1972 FTP	4.71	57.08	616.59	1.26	12.31	.13	.11	0.00	.43	.19
OTHER TESTS: MODAL		1975 FTP	3.82	47.49	612.41	1.23	12.69	.11	.09	0.00	.37	.21
		HOT START	3.02	44.23	592.87	1.19	13.21	.11	.07	0.00	.34	.21
		HFET	1.11	13.67	473.80	1.00	17.79					
31	1973 FORD TORI 351	COLD TRANS	3.72	60.81	611.98	3.91	12.34	.11	.10	0.00	.36	.22
		COLD STAB	3.11	76.53	630.20	2.21	11.67	.11	.08	0.00	.31	.16
		HOT TRANS	2.32	36.68	566.63	4.08	14.07	.08	.07	0.00	.26	.19
IHC = 200 PPM HEXANE		HOT STAB	2.91	63.69	635.68	3.59	11.91	.10	.08	0.00	.30	.17
ICO = 3.50 PERCENT CO												
		1972 FTP	3.40	69.21	621.48	3.02	11.98	.11	.09	0.00	.33	.19
OTHER TESTS: NEW JERSEY		1975 FTP	3.02	62.26	609.11	3.07	12.39	.10	.08	0.00	.31	.18
MODAL		HOT START	2.63	50.47	602.63	3.11	12.86	.09	.08	0.00	.28	.18
		HFET	1.74	19.95	450.60	3.26	18.21					
N.J. IHC = 1000 PPM HEXANE												
N.J. ICO = 4.000 PERCENT CO												
32	1973 FORD TORI 351	COLD TRANS	4.64	72.58	798.11	3.55	9.58	.19	.16	0.00	.55	.14
		COLD STAB	4.12	95.27	641.28	1.52	11.04	.20	.10	0.00	.49	.14
		HOT TRANS	3.52	52.43	564.32	3.32	13.49	.13	.10	0.00	.40	.15
IHC = 750 PPM HEXANE		HOT STAB	3.88	88.35	617.88	3.26	11.54	.18	.12	0.00	.45	.15
ICO = 8.40 PERCENT CO												
		1972 FTP	4.37	84.41	716.35	2.49	10.29	.20	.13	0.00	.52	.14
OTHER TESTS: MODAL		1975 FTP	4.06	78.91	652.56	2.43	11.24	.18	.11	0.00	.48	.14
		HOT START	3.71	71.16	592.24	2.38	12.40	.15	.11	0.00	.42	.15
		HFET	2.40	23.60	451.60	4.43	17.88					

EMISSION RESULTS EXPRESSED IN GRAMS/MILE - FUEL ECONOMY IN MILES/GALLON

LISTING OF FEDERAL TEST PROCEDURE RESULTS
ON INDIVIDUAL VEHICLES

NEWARK, N.J.

VEHICLE NUMBER	YEAR MAKE MODEL CID	TEST TYPE	HC	CO	CO2	NOXC	FUEL ECONOMY	*----------LIGHT HYDROCARBONS----------* METHANE (CH4)	ETHANE (C2H6)	PROPANE (C3H8)	C2 UNSATURATES ETHYLENE (C2H4)	+ACETYLENE (C2H2)	ALIPHATIC ALDEHYDES (R-CHO)
33	1973 FORD LTD 400	COLD TRANS	2.75	20.11	740.42	1.12	11.37	.07	.08	0.00		.31	.17
		COLD STAB	1.98	11.90	763.81	1.60	11.25	.04	.06	0.00		.22	.22
		HOT TRANS	2.74	10.66	674.29	1.76	12.68	.03	.05	0.00		.20	.21
IHC =	320 PPM HEXANE	HOT STAB	1.89	9.13	764.37	1.03	11.31	.04	.06	0.00		.21	.27
ICO =	.90 PERCENT CO												
		1972 FTP	2.35	15.83	752.61	1.37	11.31	.05	.07	0.00		.26	.20
OTHER TESTS: MODAL		1975 FTP	2.35	13.25	734.57	1.55	11.63	.05	.06	0.00		.23	.21
		HOT START	2.30	9.86	721.25	1.55	11.93	.04	.05	0.00		.21	.24
		HFET	1.24	5.46	465.60	2.52	18.56						
34	1973 FORD LTD 400	COLD TRANS	4.26	23.58	738.75	6.78	11.24	.07	.08	0.00		.31	
		COLD STAB	1.69	11.51	727.70	3.22	11.82	.03	.05	0.00		.20	
		HOT TRANS	2.19	7.99	676.80	6.84	12.75	.03	.05	0.00		.21	
IHC =	60 PPM HEXANE	HOT STAB	1.65	8.39	710.05	6.22	12.18	.03	.04	0.00		.19	
ICO =	.25 PERCENT CO												
		1972 FTP	2.92	17.29	732.99	4.92	11.54	.05	.06	0.00		.26	
OTHER TESTS: MODAL		1975 FTP	2.36	13.03	716.08	4.94	11.93	.04	.05	0.00		.23	
		HOT START	1.91	8.20	694.13	5.06	12.45	.03	.04	0.00		.20	
		HFET	1.39	3.51	464.20	4.83	18.72						
35	1973 MAZD ORX3 70	COLD TRANS	13.44	62.45	419.08	2.10	15.85	.23	.17	0.00		.68	.60
		COLD STAB	15.11	106.45	430.08	.73	13.75	.56	.18	0.00		1.15	.53
		HOT TRANS	8.62	60.75	437.58	1.67	15.84	.20	.10	0.00		.52	.60
IHC =	150 PPM HEXANE	HOT STAB	13.59	98.95	442.89	1.93	13.84	.74	.25	0.00		1.52	.53
ICO =	5.60 PERCENT CO												
		1972 FTP	14.31	85.39	424.81	1.39	14.68	.40	.17	0.00		.92	.56
OTHER TESTS: MODAL		1975 FTP	13.00	84.92	429.86	1.27	14.68	.39	.15	0.00		.88	.56
		HOT START	11.21	80.67	440.35	1.19	14.73	.48	.18	0.00		1.04	.57
		HFET	.83	9.68	386.10	1.05	21.97						

EMISSION RESULTS EXPRESSED IN GRAMS/MILE - FUEL ECONOMY IN MILES/GALLON

LISTING OF FEDERAL TEST PROCEDURE RESULTS
ON INDIVIDUAL VEHICLES

NEWARK, N.J.

VEHICLE NUMBER	YEAR MAKE MODEL CID	TEST TYPE	HC	CO	CO2	NOXC	FUEL ECONOMY	*----------LIGHT HYDROCARBONS----------* METHANE (CH4)	ETHANE (C2H6)	PROPANE (C3H8)	C2 UNSATURATES ETHYLENE (C2H4)	+ACETYLENE (C2H2)	ALIPHATIC ALDEHYDES (s-CHO)
36	1973 MERC MARQ 429	COLD TRANS	3.79	70.14	813.09	2.91	9.49	.14	.12	0.00		.40	.14
		COLD STAB	2.34	34.49	879.80	1.63	9.43	.08	.07	0.00		.28	.12
		HOT TRANS	2.04	18.75	745.29	2.85	11.36	.04	.04	0.00		.20	.16
IHC =	150 PPM HEXANE	HOT STAB	1.91	22.14	747.88	2.67	11.25	.06	.06	0.00		.24	.18
ICO =	.50 PERCENT CO												
		1972 FTP	3.63	51.55	847.87	2.24	9.46	.11	.09	0.00		.34	.13
OTHER TESTS:	MODAL	1975 FTP	2.56	37.54	829.37	2.23	9.90	.08	.07	0.00		.28	.14
		HOT START	1.97	20.52	746.64	2.24	11.30	.05	.05	0.00		.22	.17
		HFET	1.39	13.51	525.70	3.02	16.10						
37	1973 OLDS CUTL 350	COLD TRANS	3.66	13.60	721.42	3.86	11.76	.05	.10	0.00		.34	.40
		COLD STAB	2.81	6.97	726.78	2.74	11.89	.04	.07	0.00		.28	.47
		HOT TRANS	2.96	7.03	619.33	3.92	13.87	.03	.05	0.00		.25	.42
IHC =	100 PPM HEXANE	HOT STAB	2.96	8.47	717.80	3.54	11.99	.04	.08	0.00		.28	.42
ICO =	.25 PERCENT CO												
		1972 FTP	3.22	10.15	724.21	3.27	11.83	.04	.08	0.00		.31	.44
OTHER TESTS:	NEW JERSEY	1975 FTP	3.03	8.35	696.36	3.29	12.34	.04	.07	0.00		.29	.44
	MODAL	HOT START	2.96	7.78	670.67	3.23	12.82	.04	.07	0.00		.27	.42
		HFET	1.93	3.83	436.90	3.38	19.76						
N.J. IHC =	F PPM HEXANE												
N.J. ICO =	F PERCENT CO												
38	1973 OLDS V.S? 350	COLD TRANS	3.96	41.92	793.04	3.97	10.18	.08	.13	0.00		.39	.25
		COLD STAB	2.41	34.62	790.64	2.14	10.41	.07	.09	0.00		.32	.25
		HOT TRANS	2.91	21.43	714.54	3.70	11.72	.06	.08	0.00		.32	.24
IHC =	60 PPM HEXANE	HOT STAB	2.45	35.80	782.94	3.64	10.48	.07	.09	0.00		.32	.26
ICO =	1.60 PERCENT CO												
		1972 FTP	3.15	38.12	791.79	3.01	10.30	.07	.11	0.00		.36	.25
OTHER TESTS:	MODAL	1975 FTP	2.86	32.53	770.37	2.94	10.69	.07	.09	0.00		.34	.24
		HOT START	2.67	28.92	750.20	2.85	11.04	.06	.09	0.00		.32	.25
		HFET	1.77	8.74	491.00	2.98	17.39						

EMISSION RESULTS EXPRESSED IN GRAMS/MILE - FUEL ECONOMY IN MILES/GALLON

LISTING OF FEDERAL TEST PROCEDURE RESULTS
ON INDIVIDUAL VEHICLES

NEWARK, N.J.

VEHICLE NUMBER	YEAR MAKE MODEL CID	TEST TYPE	HC	CO	CO2	NOXC	FUEL ECONOMY	*----------LIGHT HYDROCARBONS----------* METHANE (CH4)	ETHANE (C2H6)	PROPANE (C3H8)	C2 UNSATURATES ETHYLENE+ (C2H4)	ACETYLENE (C2H2)	ALIPHATIC ALDEHYDES (R-CHO)
39	1973 PLYM SATE 318	COLD TRANS	2.67	28.31	600.17	2.64	13.59	.06	.08	0.00		.27	.17
		COLD STAB	2.58	25.89	465.86	2.12	17.24	.06	.07	0.00		.24	.20
		HOT TRANS	2.19	11.60	428.58	3.70	19.56	.05	.06	0.00		.24	.25
IHC =	150 PPM HEXANE	HOT STAB	2.45	18.30	461.99	2.43	17.80	.05	.06	0.00		.23	.23
ICO =	1.20 PERCENT CO												
		1972 FTP	2.62	27.05	530.15	2.37	15.28	.06	.07	0.00		.26	.19
OTHER TESTS: MODAL		1975 FTP	2.49	22.49	483.33	2.66	16.86	.06	.07	0.00		.25	.21
		HOT START	2.33	15.09	446.00	2.95	18.60	.05	.06	0.00		.23	.24
		HFET	1.07	3.36	332.20	3.25	26.04						
40	1973 PLYM DUST 225	COLD TRANS	3.58	30.04	431.87	6.45	18.10	.07	.06	0.00		.25	.26
		COLD STAB	1.92	18.49	437.34	3.82	18.78	.05	.04	0.00		.19	.24
		HOT TRANS	1.72	9.30	407.94	5.91	20.74	.03	.02	0.00		.15	.26
IHC =	110 PPM HEXANE	HOT STAB	1.58	15.39	447.85	5.92	18.61	.02	.03	0.00		.15	.26
ICO =	.90 PERCENT CO												
		1972 FTP	2.72	24.02	434.72	5.08	18.45	.06	.05	0.00		.22	.25
OTHER TESTS: MODAL		1975 FTP	2.21	18.36	428.19	4.93	19.13	.04	.04	0.00		.19	.25
		HOT START	1.64	12.48	428.75	4.45	19.57	.02	.02	0.00		.15	.26
		HFET	1.07	3.26	313.30	5.52	27.58						
41	1973 PONT LEMA 350	COLD TRANS	4.77	49.20	800.33	2.63	9.94	.12	.13	0.00		.45	.25
		COLD STAB	3.03	13.48	778.93	2.41	10.96	.04	.07	0.00		.26	.38
		HOT TRANS	2.92	13.63	662.17	3.43	12.81	.04	.07	0.00		.26	.36
IHC =	150 PPM HEXANE	HOT STAB	2.94	11.73	759.87	2.41	11.27	.04	.07	0.00		.26	.41
ICO =	.20 PERCENT CO												
		1972 FTP	3.86	30.58	789.17	2.52	10.45	.08	.10	0.00		.35	.32
OTHER TESTS: MODAL		1975 FTP	3.36	20.87	751.48	2.74	11.17	.06	.08	0.00		.30	.35
		HOT START	2.93	12.64	713.11	3.00	11.96	.04	.07	0.00		.26	.39
		HFET	2.05	8.91	486.20	3.31	17.51						

EMISSION RESULTS EXPRESSED IN GRAMS/MILE - FUEL ECONOMY IN MILES/GALLON

LISTING OF FEDERAL TEST PROCEDURE RESULTS
ON INDIVIDUAL VEHICLES

NEWARK, N.J.

VEHICLE NUMBER	YEAR MAKE MODEL CID	TEST TYPE	HC	CO	CO2	NOXC	FUEL ECONOMY	METHANE (CH4)	ETHANE (C2H6)	PROPANE (C3H8)	C2 UNSATURATES ETHYLENE (C2H4)	C2 UNSATURATES ACETYLENE (C2H2)	ALIPHATIC ALDEHYDES (R-CHO)
								----------LIGHT HYDROCARBONS----------					
42	1973 PONT CATA 400	COLD TRANS	4.45	52.74	770.95	3.79	10.23	.10	.09	0.00		.36	.26
		COLD STAB	3.21	10.80	747.95	2.56	11.45	.05	.08	0.00		.25	.48
		HOT TRANS	3.21	9.02	673.59	3.92	12.72	.04	.08	0.00		.24	.37
IHC = 850 PPM HEXANE		HOT STAB	3.48	9.46	637.26	3.48	13.38	.04	.07	0.00		.24	.49
ICO = .25 PERCENT CO													
		1972 FTP	3.81	30.87	758.96	3.15	10.83	.07	.08	0.00		.30	.37
OTHER TESTS: NEW JERSEY		1975 FTP	3.47	18.95	732.40	3.18	11.48	.06	.08	0.00		.27	.40
MODAL		HOT START	3.35	9.25	654.65	3.23	13.06	.04	.07	0.00		.24	.43
		HFET	1.76	4.59	479.30	3.65	18.04						
N.J. IHC = 2000 PPM HEXANE													
N.J. ICO = .20 PERCENT CO													
43	1973 TOYO CELI 120	COLD TRANS	1.41	27.11	392.34	4.95	20.20	.04	.03	0.00		.15	
		COLD STAB	1.83	33.29	337.93	2.69	22.41	.05	.04	0.00		.17	
		HOT TRANS	1.94	13.48	339.64	4.21	24.19	.05	.03	0.00		.18	
IHC = 250 PPM HEXANE		HOT STAB	1.75	30.86	332.28	4.54	22.97	.05	.04	0.00		.17	
ICO = 6.20 PERCENT CO													
		1972 FTP	1.63	30.33	363.97	3.77	21.29	.04	.03	0.00		.16	
OTHER TESTS: NEW JERSEY		1975 FTP	1.77	26.61	349.59	3.57	22.35	.05	.04	0.00		.17	
MODAL		HOT START	1.84	22.54	335.80	3.35	23.54	.05	.03	0.00		.18	
		HFET	.59	5.46	262.20	3.41	32.56						
N.J. IHC = F PPM HEXANE													
N.J. ICO = F PERCENT CO													
44	1973 VOLK SEDA 97	COLD TRANS	3.79	28.79	301.42	3.04	24.71	.08	.06	0.00		.30	.17
		COLD STAB	2.71	33.01	339.44	1.75	22.19	.08	.05	0.00		.28	.16
		HOT TRANS	2.88	24.47	275.40	2.48	27.48	.07	.04	0.00		.26	.15
IHC = 180 PPM HEXANE		HOT STAB	2.71	39.54	323.36	2.80	22.48	.09	.06	0.00		.31	.14
ICO = 5.80 PERCENT CO													
		1972 FTP	3.23	30.99	321.48	2.37	23.33	.08	.05	0.00		.29	.16
OTHER TESTS: MODAL		1975 FTP	2.98	29.81	314.24	2.22	23.95	.08	.05	0.00		.28	.16
		HOT START	2.79	32.38	300.67	1.97	24.63	.08	.05	0.00		.29	.14
		HFET	.73	4.49	216.50	.85	39.29						

EMISSION RESULTS EXPRESSED IN GRAMS/MILE - FUEL ECONOMY IN MILES/GALLON

LISTING OF FEDERAL TEST PROCEDURE RESULTS
ON INDIVIDUAL VEHICLES

NEWARK, N.J.

VEHICLE NUMBER	YEAR MAKE MODEL CID	TEST TYPE	HC	CO	CO2	NOXC	FUEL ECONOMY	*----------LIGHT HYDROCARBONS----------* METHANE (CH4)	ETHANE (C2H6)	PROPANE (C3H8)	C2 UNSATURATES ETHYLENE (C2H4)	+ACETYLENE (C2H2)	ALIPHATIC ALDEHYDES (P-CHO)
45	1973 VOLK SEDA 97	COLD TRANS	3.97	39.08	288.44	3.46	24.49	.08	.06	0.00		.26	.15
		COLD STAB	2.88	52.98	288.67	1.66	23.29	.09	.06	0.00		.29	.10
		HOT TRANS	2.92	29.78	279.67	3.01	26.44	.06	.06	0.00		.22	.13
IHC =	150 PPM HEXANE	HOT STAB	2.88	52.68	294.19	3.18	22.99	.09	.06	0.00		.29	.11
ICO =	.60 PERCENT CO												
		1972 FTP	3.40	46.33	288.56	2.52	23.85	.08	.06	0.00		.27	.13
OTHER TESTS: MODAL		1975 FTP	3.12	43.79	286.17	2.40	24.32	.08	.06	0.00		.26	.12
		HOT START	2.90	41.72	287.24	2.22	24.52	.07	.06	0.00		.26	.12
		HFET	.85	7.19	217.50	2.47	38.34						
46	1972 BUIC CENT 455	COLD TRANS	3.88	40.64	753.51	6.61	10.70	.09	.08	0.00		.35	.37
		COLD STAB	2.52	50.20	745.86	4.64	10.66	.10	.05	0.00		.32	.46
		HOT TRANS	2.33	28.41	666.55	6.98	12.35	.07	.04	0.00		.27	.36
IHC =	60 PPM HEXANE	HOT STAB	2.33	44.61	718.49	6.07	11.15	.09	.06	0.00		.30	.45
ICO =	2.80 PERCENT CO												
		1972 FTP	3.17	45.63	749.52	5.59	10.68	.10	.06	0.00		.33	.42
OTHER TESTS: MODAL		1975 FTP	2.75	42.29	725.79	5.69	11.08	.09	.05	0.00		.31	.41
		HOT START	2.33	36.86	693.63	5.81	11.69	.08	.05	0.00		.28	.41
		HFET	.76	4.39	495.70	4.48	17.57						
47	1972 BUIC ELEC 455	COLD TRANS	3.91	56.41	823.29	7.28	9.60						.30
		COLD STAB	3.78	65.89	773.81	4.63	9.98						.34
		HOT TRANS	3.14	31.13	705.24	7.48	11.62						.29
IHC =	200 PPM HEXANE	HOT STAB	3.65	61.10	754.65	6.69	10.29						.32
ICO =	4.40 PERCENT CO												
		1972 FTP	3.85	61.35	797.49	5.90	9.80						.32
OTHER TESTS: MODAL		1975 FTP	3.63	54.46	765.28	5.95	10.29						.32
		HOT START	3.40	46.76	731.00	6.04	10.89						.31
		HFET	1.35	6.30	479.00	5.92	18.00						

EMISSION RESULTS EXPRESSED IN GRAMS/MILE - FUEL ECONOMY IN MILES/GALLON

LISTING OF FEDERAL TEST PROCEDURE RESULTS
ON INDIVIDUAL VEHICLES

NEWARK, N.J.

VEHICLE NUMBER	YEAR MAKE MODEL CID	TEST TYPE	HC	CO	CO2	NOXC	FUEL ECONOMY	*----------LIGHT HYDROCARBONS----------* METHANE (CH4)	ETHANE (C2H6)	PROPANE (C3H8)	C2 UNSATURATES ETHYLENE (C2H4)	+ACETYLENE (C2H2)	ALIPHATIC ALDEHYDES (R-CHO)
48	1972 CHEV VEGA 140	COLD TRANS	2.95	42.55	299.94	3.75	23.59	.06	.04	0.00		.21	.13
		COLD STAB	1.45	18.30	337.26	2.51	23.95	.04	.03	0.00		.15	.13
		HOT TRANS	1.34	12.40	298.72	4.30	27.52	.03	.03	0.00		.13	.14
IHC =	160 PPM HEXANE	HOT STAB	1.50	18.02	335.17	3.45	24.10	.04	.03	0.00		.15	.13
ICO =	3.70 PERCENT CO												
		1972 FTP	2.17	29.91	319.40	3.11	23.78	.05	.03	0.00		.18	.13
OTHER TESTS: MODAL		1975 FTP	1.73	21.68	319.07	3.26	24.75	.04	.03	0.00		.16	.13
		HOT START	1.43	15.33	317.72	3.32	25.63	.03	.03	0.00		.14	.13
		HFET	.67	3.73	213.40	3.50	40.09						
49	1972 CHEV NOVA 307	COLD TRANS	8.16	28.18	810.61	4.96	10.08	.08	.11	0.00		.41	.43
		COLD STAB	2.41	8.58	622.51	1.95	13.79	.03	.07	0.00		.21	.47
		HOT TRANS	2.46	8.55	520.47	3.48	16.38	.03	.04	0.00		.18	.36
IHC =	160 PPM HEXANE	HOT STAB	2.21	7.44	571.20	4.55	15.05	.03	.06	0.00		.19	.37
ICO =	.40 PERCENT CO												
		1972 FTP	5.16	17.96	712.55	3.39	11.72	.05	.09	0.00		.31	.45
OTHER TESTS: MODAL		1975 FTP	3.61	12.60	633.39	2.99	13.35	.04	.07	0.00		.25	.43
		HOT START	2.33	7.97	546.92	2.64	15.66	.03	.05	0.00		.19	.36
		HFET	1.81	3.69	345.20	4.26	24.88						
50	1972 CHEV NOVA 250	COLD TRANS	2.11	20.82	503.34	3.52	16.35	.04	.03	0.00		.17	
		COLD STAB	1.32	20.49	505.86	2.19	16.37	.05	.03	0.00		.20	
		HOT TRANS	1.64	12.84	452.20	3.47	18.58	.02	.02	0.00		.13	
IHC =	250 PPM HEXANE	HOT STAB	1.36	19.24	496.09	3.24	16.74	.04	.03	0.00		.18	
ICO =	6.00 PERCENT CO												
		1972 FTP	1.70	20.65	504.65	2.83	16.36	.04	.03	0.00		.19	
OTHER TESTS: MODAL		1975 FTP	1.57	18.47	490.70	2.82	16.92	.04	.03	0.00		.17	
		HOT START	1.49	16.47	475.08	2.80	17.57	.03	.02	0.00		.15	
		HFET	.48	3.31	329.30	1.76	26.29						

EMISSION RESULTS EXPRESSED IN GRAMS/MILE - FUEL ECONOMY IN MILES/GALLON

LISTING OF FEDERAL TEST PROCEDURE RESULTS
ON INDIVIDUAL VEHICLES

NEWARK, N.J.

VEHICLE NUMBER	YEAR MAKE MODEL CID	TEST TYPE	HC	CO	CO2	NOXC	FUEL ECONOMY	LIGHT HYDROCARBONS METHANE (CH4)	ETHANE (C2H6)	PROPANE (C3H8)	C2 UNSATURATES ETHYLENE+ACETYLENE (C2H4) (C2H2)	ALIPHATIC ALDEHYDES (R-CHO)
51	1972 CHEV IMPA 350	COLD TRANS	3.99	68.52	715.04	5.90	10.62	.15	.11	0.00	.53	
		COLD STAB	3.56	79.99	659.21	2.33	11.15	.13	.10	0.00	.42	
		HOT TRANS	3.06	45.47	603.34	4.80	12.97	.09	.09	0.00	.34	
IHC =	180 PPM HEXANE	HOT STAB	3.57	80.96	654.63	5.42	11.19	.13	.09	0.00	.42	
ICO =	6.50 PERCENT CO											
		1972 FTP	3.76	74.50	685.93	4.04	10.89	.14	.11	0.00	.47	
OTHER TESTS: MODAL		1975 FTP	3.51	68.21	655.46	3.74	11.47	.12	.10	0.00	.42	
		HOT START	3.33	63.97	630.08	3.55	11.98	.11	.09	0.00	.38	
		HFET	1.26	19.63	416.00	4.09	19.68					
52	1972 CHEV BROG 350	COLD TRANS	5.04	46.17	687.66	7.04	11.43	.12	.14	0.00	.49	.31
		COLD STAB	3.56	22.84	691.92	5.75	12.01	.07	.08	0.00	.31	.44
		HOT TRANS	3.03	17.88	573.93	2.47	14.51	.06	.08	0.00	.35	.38
IHC =	140 PPM HEXANE	HOT STAB	3.38	17.95	677.75	6.47	12.38	.06	.08	0.00	.29	.44
ICO =	1.70 PERCENT CO											
		1972 FTP	4.27	34.01	689.88	6.37	11.73	.09	.11	0.00	.40	.37
OTHER TESTS: MODAL		1975 FTP	3.72	26.29	658.85	5.12	12.47	.07	.09	0.00	.36	.39
		HOT START	3.21	17.91	628.05	3.70	13.32	.06	.08	0.00	.32	.41
		HFET	.59	6.56	488.50	5.90	17.73					
53	1972 CHEV IMPA 350	COLD TRANS	3.47	44.31	617.08	5.19	12.72	.07	.08	0.00	.30	.18
		COLD STAB	2.35	29.33	616.75	2.61	13.24	.06	.06	0.00	.26	.18
		HOT TRANS	2.81	25.72	559.11	5.06	14.59	.06	.06	0.00	.25	.19
IHC =	200 PPM HEXANE	HOT STAB	2.40	29.41	608.34	4.77	13.40	.05	.05	0.00	.25	.17
ICO =	1.20 PERCENT CO											
		1972 FTP	2.89	36.50	616.91	3.85	12.99	.06	.07	0.00	.28	.18
OTHER TESTS: MODAL		1975 FTP	2.71	31.43	601.09	3.81	13.47	.06	.07	0.00	.26	.18
		HOT START	2.60	27.64	584.77	3.70	13.95	.05	.06	0.00	.25	.18
		HFET	.47	15.56	417.80	4.18	20.00					

EMISSION RESULTS EXPRESSED IN GRAMS/MILE - FUEL ECONOMY IN MILES/GALLON

LISTING OF FEDERAL TEST PROCEDURE RESULTS
ON INDIVIDUAL VEHICLES

NEWARK, N.J.

VEHICLE NUMBER	YEAR MAKE MODEL CID	TEST TYPE	HC	CO	CO2	NOXC	FUEL ECONOMY	METHANE (CH4)	ETHANE (C2H6)	PROPANE (C3H8)	C2 UNSATURATES ETHYLENE (C2H4)	C2 UNSATURATES ACETYLENE (C2H2)	ALIPHATIC ALDEHYDES (R-CHO)
								----------LIGHT HYDROCARBONS----------					
54	1972 CHEV IMPA 350	COLD TRANS	3.62	43.76	667.47	5.76	11.87						
		COLD STAB	3.10	44.23	684.99	3.03	11.61						
		HOT TRANS	2.91	28.24	583.59	5.23	13.94						
IHC =	100 PPM HEXANE	HOT STAB	3.66	38.85	439.28	5.29	17.40						
ICO =	1.80 PERCENT CO												
		1972 FTP	3.35	44.20	676.60	4.33	11.73						
OTHER TESTS: MODAL		1975 FTP	3.15	39.71	653.72	4.19	12.22						
		HOT START	2.99	33.67	508.36	4.03	15.55						
		HFET	1.77	13.98	417.50	4.84	19.94						
55	1972 DATS 2511 97	COLD TRANS	3.60	56.79	353.93	2.48	19.52	.07	.07	0.00	.24		.16
		COLD STAB	1.79	17.13	365.68	1.59	22.28	.05	.04	0.00	.19		.20
		HOT TRANS	1.64	10.48	327.05	2.03	25.45	.04	.05	0.00	.18		.20
IHC =	260 PPM HEXANE	HOT STAB	1.54	18.53	374.37	2.27	21.68	.05	.03	0.00	.19		.20
ICO =	5.40 PERCENT CO												
		1972 FTP	2.65	36.12	360.05	2.01	20.87	.06	.06	0.00	.21		.18
OTHER TESTS: MODAL		1975 FTP	2.12	23.48	352.72	1.89	22.39	.05	.05	0.00	.20		.19
		HOT START	1.75	14.68	351.72	1.88	23.34	.04	.04	0.00	.18		.20
		HFET	.60	2.82	212.70	1.92	46.52						
56	1972 DODG CHAL 318	COLD TRANS	3.43	19.28	594.46	3.04	13.97	.04	.07	0.00	.27		.40
		COLD STAB	3.67	25.82	547.60	2.49	13.66	.06	.08	0.00	.28		.32
		HOT TRANS	2.78	12.51	507.44	3.21	16.56	.03	.05	0.00	.20		.36
IHC =	210 PPM HEXANE	HOT STAB	3.37	13.91	584.81	2.79	14.16	.05	.06	0.00	.25		.32
ICO =	1.50 PERCENT CO												
		1972 FTP	3.56	22.59	596.09	2.75	13.81	.05	.07	0.00	.27		.36
OTHER TESTS: MODAL		1975 FTP	3.38	20.83	572.35	2.80	14.41	.05	.07	0.00	.25		.35
		HOT START	3.09	16.42	547.77	2.73	15.21	.04	.05	0.00	.23		.34
		HFET	1.21	3.80	365.20	2.27	23.67						

EMISSION RESULTS EXPRESSED IN GRAMS/MILE - FUEL ECONOMY IN MILES/GALLON

LISTING OF FEDERAL TEST PROCEDURE RESULTS
ON INDIVIDUAL VEHICLES

NEWARK, N.J.

VEHICLE NUMBER	YEAR MAKE MODEL CID	TEST TYPE	HC	CO	CO2	NOXC	FUEL ECONOMY	*----------LIGHT HYDROCARBONS----------* METHANE (CH4)	ETHANE (C2H6)	PROPANE (C3H8)	C2 UNSATURATES ETHYLENE (C2H4)	ACETYLENE (C2H2)	ALIPHATIC ALDEHYDES (R-CHO)
57	1972 DODG POLA 360	COLD TRANS	11.88	243.18	545.99	3.85	9.19	.69	.33	0.00		1.60	.24
		COLD STAB	9.36	205.97	499.10	4.08	10.41	.63	.26	0.00		1.35	.23
		HOT TRANS	8.12	136.43	456.94	4.44	12.73	.54	.26	0.00		1.25	.22
IHC =	300 PPM HEXANE	HOT STAB	9.26	205.76	512.17	3.53	10.26	.65	.26	0.00		1.37	.11
ICO =	9.80 PERCENT CO												
		1972 FTP	10.56	223.78	521.55	3.97	9.79	.66	.30	0.00		1.47	.23
OTHER TESTS:	MODAL	1975 FTP	9.54	194.66	497.25	4.13	10.65	.62	.28	0.00		1.38	.23
		HOT START	8.72	172.57	485.73	3.79	11.31	.60	.26	0.00		1.31	.16
		HFET	3.06	53.01	361.90	4.01	19.83						
58	1972 FORD PINT 122	COLD TRANS	2.60	142.79	300.39	2.70	16.65	.03	.05	0.00		.21	.38
		COLD STAB	1.56	49.00	288.21	1.38	23.98	.02	.05	0.00		.18	.25
		HOT TRANS	1.89	54.09	264.32	2.99	24.98	.02	.04	0.00		.17	.33
IHC =	30 PPM HEXANE	HOT STAB	1.65	93.33	286.68	2.48	20.24	.03	.05	0.00		.18	.23
ICO =	.40 PERCENT CO												
		1972 FTP	2.06	93.89	294.04	2.01	19.81	.02	.05	0.00		.20	.31
OTHER TESTS:	MODAL	1975 FTP	1.87	69.69	284.20	2.09	22.21	.02	.05	0.00		.19	.30
		HOT START	1.76	74.55	275.97	2.14	22.26	.03	.05	0.00		.18	.27
		HFET	1.26	24.31	214.10	2.92	34.63						
59	1972 FORD TORI 302	COLD TRANS	5.83	104.79	556.49	2.42	12.00	.25	.18	0.00		.65	.16
		COLD STAB	4.97	123.06	526.45	1.06	12.07	.23	.14	0.00		.55	.12
		HOT TRANS	4.52	79.74	476.02	2.05	14.42	.18	.13	0.00		.48	.14
IHC =	280 PPM HEXANE	HOT STAB	4.85	115.19	519.95	2.23	12.39	.21	.12	0.00		.50	.12
ICO =	5.40 PERCENT CO												
		1972 FTP	5.38	114.32	540.83	1.71	12.03	.24	.16	0.00		.60	.14
OTHER TESTS:	NEW JERSEY	1975 FTP	5.62	107.48	518.87	1.61	12.61	.22	.14	0.00		.55	.14
	MODAL	HOT START	4.69	98.22	498.92	1.53	13.28	.19	.12	0.00		.49	.13
		HFET	3.16	51.51	391.70	2.58	18.39						

N.J. IHC = 2000 PPM HEXANE
N.J. ICO = 6.00 PERCENT CO

EMISSION RESULTS EXPRESSED IN GRAMS/MILE - FUEL ECONOMY IN MILES/GALLON

LISTING OF FEDERAL TEST PROCEDURE RESULTS
ON INDIVIDUAL VEHICLES

NEWARK, N.J.

VEHICLE NUMBER	YEAR MAKE MODEL CID	TEST TYPE	HC	CO	CO2	NOXC	FUEL ECONOMY	METHANE (CH4)	ETHANE (C2H6)	PROPANE (C3H8)	C2 UNSATURATES ETHYLENE+ACETYLENE (C2H4) (C2H2)	ALIPHATIC ALDEHYDES (R-CHO)
								----------LIGHT HYDROCARBONS----------				
60	1972 FORD TORI 351	COLD TRANS	3.91	69.73	581.64	7.14	12.61	.09	.07	0.00	.26	.25
		COLD STAR	2.47	45.29	615.52	4.19	12.78	.07	.06	0.00	.22	.24
		HOT TRANS	2.25	32.57	484.93	7.21	16.82	.05	.04	0.00	.17	.27
IHC = 120 PPM HEXANE		HOT STAR	2.10	29.83	559.39	6.56	14.48	.06	.05	0.00	.18	.26
ICO = 2.20 PERCENT CO												
		1972 FTP	3.16	56.99	599.31	5.60	12.70	.08	.07	0.00	.24	.25
OTHER TESTS: NEW JERSEY		1975 FTP	2.71	44.12	572.92	5.62	13.64	.07	.06	0.00	.21	.25
MODAL		HOT START	2.17	26.35	523.75	5.56	15.52	.05	.04	0.00	.18	.26
		HFET	1.54	7.72	379.80	6.32	22.36					
N.J. IHC = 510 PPM HEXANE												
N.J. ICO = 2.530 PERCENT CO												
61	1972 FORD BRON 351	COLD TRANS	3.59	34.27	691.75	7.97	11.72	.08	.08	0.00	.28	.28
		COLD STAR	2.31	23.41	743.02	4.03	11.28	.05	.05	0.00	.20	.19
		HOT TRANS	2.42	8.96	519.61	7.09	16.39	.03	.04	0.00	.17	.28
IHC = 1300 PPM HEXANE		HOT STAR	1.66	10.70	657.67	7.32	13.06	.03	.03	0.00	.15	.24
ICO = .80 PERCENT CO												
		1972 FTP	2.92	28.61	718.48	5.92	11.49	.06	.06	0.00	.24	.23
OTHER TESTS: MODAL		1975 FTP	2.63	21.70	671.51	5.68	12.43	.05	.05	0.00	.21	.23
		HOT START	2.13	9.87	591.59	5.27	14.47	.03	.03	0.00	.16	.26
		HFET	1.86	5.34	413.20	6.97	20.77					
62	1972 FORD STAW 351	COLD TRANS	5.65	65.45	690.78	5.95	10.94	.16	.14	0.00	.60	
		COLD STAR	3.52	60.86	664.12	3.53	11.51	.12	.08	0.00	.41	
		HOT TRANS	3.82	35.75	622.06	6.31	13.24	.09	.09	0.00	.39	
IHC = 150 PPM HEXANE		HOT STAR	3.27	51.20	661.38	5.46	11.80	.10	.08	0.00	.39	
ICO = 3.50 PERCENT CO												
		1972 FTP	4.54	63.[illegible]5	676.88	4.69	11.23	.14	.11	0.00	.50	
OTHER TESTS: MODAL		1975 FTP	4.04	54.95	652.67	4.79	11.80	.12	.10	0.00	.44	
		HOT START	3.53	43.81	632.99	4.85	12.45	.10	.09	0.00	.39	
		HFET	2.32	12.85	444.30	4.77	18.81					

EMISSION RESULTS EXPRESSED IN GRAMS/MILE - FUEL ECONOMY IN MILES/GALLON

LISTING OF FEDERAL TEST PROCEDURE RESULTS
ON INDIVIDUAL VEHICLES

NEWARK, N.J.

VEHICLE NUMBER	YEAR MAKE MODEL CID	TEST TYPE	HC	CO	CO2	NOXC	FUEL ECONOMY	METHANE (CH4)	ETHANE (C2H6)	PROPANE (C3H8)	C2 UNSATURATES ETHYLENE+ACETYLENE (C2H4) (C2H2)	ALIPHATIC ALDEHYDES (R-CHO)
								----------LIGHT HYDROCARBONS----------				
63	1972 FORD P[illegible] 122	COLD TRANS	3.56	35.94	335.29	3.66	22.03	.06	.07	0.00	.28	
		COLD STAB	2.74	4.67	369.39	3.08	23.03	.04	.12	0.00	.43	
		HOT TRANS	2.29	7.50	312.59	3.77	26.76	.04	.09	0.00	.30	
IHC =	175 PPM HEXANE	HOT STAB	2.96	4.23	355.75	3.36	23.89	.04	.12	0.00	.43	
ICO =	.30 PERCENT CO											
		1972 FTP	3.11	19.64	353.07	3.36	22.54	.05	.09	0.00	.36	
OTHER TESTS: MODAL		1975 FTP	2.78	11.88	346.87	3.39	23.71	.04	.10	0.00	.36	
		HOT START	2.61	5.79	335.09	3.33	25.18	.04	.10	0.00	.37	
		HFET	1.58	4.48	223.80	3.25	37.64					
64	1972 LINC CO. [illegible] 460	COLD TRANS	4.82	112.60	731.11	5.10	9.61	.13	.12	0.00	.49	.16
		COLD STAB	2.47	34.57	704.71	5.00	11.57	.15	.11	0.00	.47	.29
		HOT TRANS	3.17	21.72	653.84	7.75	12.71	.09	.06	0.00	.36	.25
IHC =	150 PPM HEXANE	HOT STAB	2.33	27.57	691.30	4.68	11.96	.14	.09	0.00	.46	.32
ICO =	3.00 PERCENT CO											
		1972 FTP	3.59	71.92	717.35	5.05	10.54	.14	.11	0.00	.48	.23
OTHER TESTS: MODAL		1975 FTP	3.15	47.13	696.26	5.77	11.37	.13	.10	0.00	.45	.25
		HOT START	2.73	24.77	673.37	6.44	12.31	.12	.07	0.00	.41	.28
		HFET	1.35	4.60	491.20	5.60	17.65					
65	1972 MERC MARQ 429	COLD TRANS	6.87	122.51	680.31	5.63	9.92	.25	.26	0.00	.85	.21
		COLD STAB	2.16	21.71	634.65	2.78	13.14	.07	.07	0.00	.31	.23
		HOT TRANS	2.45	26.70	624.32	4.67	13.17	.06	.06	0.00	.28	.22
IHC =	70 PPM HEXANE	HOT STAB	2.03	21.06	666.14	5.17	12.58	.05	.05	0.00	.27	.29
ICO =	2.00 PERCENT CO											
		1972 FTP	4.41	69.96	656.51	4.14	11.37	.15	.16	0.00	.57	.22
OTHER TESTS: MODAL		1975 FTP	3.21	43.82	641.23	3.88	12.32	.10	.10	0.00	.41	.22
		HOT START	2.23	23.76	646.12	3.84	12.85	.06	.06	0.00	.28	.25
		HFET	1.15	6.93	424.20	3.43	20.23					

EMISSION RESULTS EXPRESSED IN GRAMS/MILE - FUEL ECONOMY IN MILES/GALLON

LISTING OF FEDERAL TEST PROCEDURE RESULTS
ON INDIVIDUAL VEHICLES

NEWARK, N.J.

VEHICLE NUMBER	YEAR MAKE MODEL CID	TEST TYPE	HC	CO	CO2	NOXC	FUEL ECONOMY	*----------LIGHT HYDROCARBONS----------* METHANE (CH4)	ETHANE (C2H6)	PROPANE (C3H8)	C2 UNSATURATES ETHYLENE+ACETYLENE (C2H4)	(C2H2)	ALIPHATIC ALDEHYDES (R-CHO)
66	1972 OLDS CUTL 350	COLD TRANS	3.97	58.23	625.91	4.67	12.16	.09	.13	0.00		.36	.22
		COLD STAB	2.76	37.35	627.47	1.82	12.77	.06	.08	0.00		.27	.21
		HOT TRANS	2.79	16.97	530.11	1.69	15.69	.04	.07	0.00		.24	.27
IHC =	140 PPM HEXANE	HOT STAB	2.55	29.72	618.41	4.29	13.18	.06	.07	0.00		.25	.21
ICO =	.80 PERCENT CO												
		1972 FTP	3.34	47.34	626.72	3.18	12.47	.08	.10	0.00		.31	.22
OTHER TESTS: MODAL		1975 FTP	3.02	36.68	600.58	2.37	13.31	.06	.09	0.00		.28	.23
		HOT START	2.66	23.62	576.15	1.75	14.28	.05	.07	0.00		.25	.24
		HEET	2.12	7.45	394.30	1.72	21.50						
67	1972 OLDS DELT 455	COLD TRANS	3.16	21.67	880.28	4.95	9.61	.05	.06	0.00		.28	.26
		COLD STAB	2.21	6.63	907.26	2.52	9.60	.02	.03	0.00		.15	.27
		HOT TRANS	2.60	8.23	754.37	4.76	11.44	.03	.04	0.00		.18	.27
IHC =	1800 PPM HEXANE	HOT STAB	1.84	6.49	878.72	4.54	9.91	.02	.03	0.00		.14	.27
ICO =	.25 PERCENT CO												
		1972 FTP	2.67	13.54	894.35	3.68	9.60	.03	.04	0.00		.21	.26
OTHER TESTS: MODAL		1975 FTP	2.51	10.04	859.99	3.63	10.04	.02	.04	0.00		.18	.27
		HOT START	2.20	7.59	819.20	3.56	10.59	.02	.03	0.00		.16	.27
		HEET	1.29	3.78	482.40	4.09	18.02						
68	1972 OPEL STAW 116	COLD TRANS	2.13	26.63	378.11	4.40	20.85	.03	.03	0.00		.15	.20
		COLD STAB	1.66	4.03	358.80	2.55	24.09	.02	.02	0.00		.11	.21
		HOT TRANS	1.78	6.21	341.00	3.86	24.90	.01	.02	0.00		.12	.25
IHC =	160 PPM HEXANE	HOT STAB	1.73	4.38	342.69	4.04	25.00	.02	.02	0.00		.12	.24
ICO =	3.70 PERCENT CO												
		1972 FTP	1.57	14.56	368.04	3.44	22.42	.02	.02	0.00		.13	.21
OTHER TESTS: MODAL		1975 FTP	1.48	9.15	357.92	3.29	23.54	.02	.02	0.00		.12	.22
		HOT START	1.75	5.26	341.88	2.98	24.95	.01	.02	0.00		.12	.24
		HEET	.71	3.10	282.20	3.29	30.68						

EMISSION RESULTS EXPRESSED IN GRAMS/MILE - FUEL ECONOMY IN MILES/GALLON

LISTING OF FEDERAL TEST PROCEDURE RESULTS
ON INDIVIDUAL VEHICLES

NEWARK, N.J.

VEHICLE NUMBER	YEAR MAKE MODEL CID	TEST TYPE	HC	CO	CO2	NOXC	FUEL ECONOMY	*----------LIGHT HYDROCARBONS----------* METHANE (CH4)	ETHANE (C2H6)	PROPANE (C3H8)	C2 UNSATURATES ETHYLENE (C2H4)	+ACETYLENE (C2H2)	ALIPHATIC ALDEHYDES (R-CHO)
69	1972 PLYM FURY 318	COLD TRANS	4.36	43.07	672.45	6.46	11.77	.07	.08	0.00		.30	.30
		COLD STAB	2.73	23.54	600.03	4.92	13.75	.05	.06	0.00		.23	.43
		HOT TRANS	2.34	16.08	574.71	6.63	14.61	.03	.04	0.00		.20	.33
IHC =	170 PPM HEXANE	HOT STAB	2.52	21.11	612.30	5.93	13.58	.04	.05	0.00		.20	.42
ICO =	1.80 PERCENT CO												
		1972 FTP	3.51	32.89	634.69	5.66	12.72	.06	.07	0.00		.26	.37
OTHER TESTS: MODAL		1975 FTP	2.96	25.52	608.02	5.71	13.50	.05	.06	0.00		.24	.38
		HOT START	2.43	18.70	594.31	5.77	14.06	.04	.04	0.00		.20	.38
		HFET	1.27	5.70	433.40	5.65	19.88						
70	1972 PLYM FRY1 318	COLD TRANS	3.84	54.21	573.18	5.81	13.24	.11	.09	0.00		.34	.24
		COLD STAB	3.51	66.52	540.64	4.55	13.52	.12	.08	0.00		.36	.32
		HOT TRANS	2.99	36.23	490.75	6.11	15.93	.09	.09	0.00		.29	.30
IHC =	175 PPM HEXANE	HOT STAB	3.32	62.98	537.08	5.33	13.73	.11	.07	0.00		.33	.28
ICO =	5.50 PERCENT CO												
		1972 FTP	3.67	60.63	556.21	5.15	13.38	.11	.09	0.00		.35	.28
OTHER TESTS: MODAL		1975 FTP	3.44	55.72	533.72	5.24	14.04	.11	.09	0.00		.34	.30
		HOT START	3.16	50.17	514.91	5.41	14.70	.10	.08	0.00		.31	.29
		HFET	1.72	9.35	365.20	4.69	23.03						
71	1972 PONT LEMA 350	COLD TRANS	3.58	28.23	751.92	3.81	10.99	.07	.10	0.00		.42	.25
		COLD STAB	1.88	14.80	792.25	2.47	10.80	.04	.06	0.00		.27	.24
		HOT TRANS	2.29	12.41	606.66	3.41	14.01	.04	.08	0.00		.33	.29
IHC =	200 PPM HEXANE	HOT STAB	1.91	13.22	792.05	3.50	10.84	.04	.06	0.00		.25	.26
ICO =	.20 PERCENT CO												
		1972 FTP	2.69	21.23	772.95	3.11	10.89	.06	.08	0.00		.34	.25
OTHER TESTS: MODAL		1975 FTP	2.34	16.91	733.31	3.00	11.57	.05	.07	0.00		.31	.26
		HOT START	2.09	12.83	703.31	2.99	12.16	.04	.07	0.00		.29	.27
		HFET	2.22	6.80	451.00	4.06	18.94						

EMISSION RESULTS EXPRESSED IN GRAMS/MILE - FUEL ECONOMY IN MILES/GALLON

LISTING OF FEDERAL TEST PROCEDURE RESULTS
ON INDIVIDUAL VEHICLES

NEWARK, N.J.

VEHICLE NUMBER	YEAR MAKE MODEL CID	TEST TYPE	HC	CO	CO2	NOXC	FUEL ECONOMY	*----------LIGHT HYDROCARBONS----------* METHANE (CH4)	ETHANE (C2H6)	PROPANE (C3H8)	C2 UNSATURATES ETHYLENE+ (C2H4)	ACETYLENE (C2H2)	ALIPHATIC ALDEHYDES (P-CHO)
72	1972 PONT GRAN 400	COLD TRANS	3.90	97.57	693.79	3.44	10.52	.25	.20	0.00		.74	.23
		COLD STAB	3.41	106.67	656.11	1.40	10.63	.32	.17	0.00		.79	.21
		HOT TRANS	4.93	72.82	571.03	3.39	12.66	.24	0.00	0.00		.71	.24
IHC =	350 PPM HEXANE	HOT STAB	5.63	106.24	656.78	3.16	10.57	.29	.16	0.00		.71	.21
ICO =	9.00 PERCENT CO												
		1972 FTP	3.65	97.53	674.15	2.38	10.58	.29	.18	0.00		.77	.22
OTHER TESTS:	MODAL	1975 FTP	3.93	93.50	640.65	2.36	11.09	.28	.13	0.00		.76	.23
		HOT START	4.98	90.24	615.73	2.37	11.48	.27	.08	0.00		.71	.23
		HFET	2.98	36.07	453.50	3.31	17.08						
73	1972 TOYO CELI 120	COLD TRANS	2.79	30.81	490.11	3.31	16.21	.05	.05	0.00		.22	.35
		COLD STAB	2.32	19.27	502.76	2.41	16.42	.05	.06	0.00		.22	.03
		HOT TRANS	2.27	7.31	455.18	3.74	18.73	.03	.06	0.00		.17	.32
IHC =	150 PPM HEXANE	HOT STAB	2.39	15.20	504.83	3.04	16.55	.04	.06	0.00		.21	.02
ICO =	.40 PERCENT CO												
		1972 FTP	2.55	24.79	496.71	2.84	16.32	.05	.06	0.00		.22	.18
OTHER TESTS:	MODAL	1975 FTP	2.41	18.38	487.18	2.96	16.95	.04	.06	0.00		.21	.17
		HOT START	2.33	11.42	481.07	2.99	17.53	.04	.06	0.00		.19	.16
		HFET	.89	3.57	350.20	2.81	24.75						
74	1972 VOLK COLV 97	COLD TRANS	4.95	53.02	301.67	3.55	22.15	.10	.06	0.00		.28	.12
		COLD STAB	4.57	67.39	315.63	2.03	20.36	.13	.07	0.00		.34	.12
		HOT TRANS	3.50	40.27	277.08	3.29	25.25	.08	.06	0.00		.26	.11
IHC =	160 PPM HEXANE	HOT STAB	4.15	73.27	305.52	3.26	20.46	.13	.08	0.00		.35	.12
ICO =	6.20 PERCENT CO												
		1972 FTP	4.75	60.51	308.95	2.76	21.18	.11	.07	0.00		.31	.12
OTHER TESTS:	NEW JERSEY MODAL	1975 FTP	4.35	57.03	302.24	2.69	21.88	.11	.07	0.00		.31	.12
		HOT START	3.84	57.47	291.91	2.55	22.50	.11	.07	0.00		.30	.11
		HFET	1.02	9.77	221.90	2.99	36.91						

N.J. IHC = F PPM HEXANE
N.J. ICO = F PERCENT CO

EMISSION RESULTS EXPRESSED IN GRAMS/MILE - FUEL ECONOMY IN MILES/GALLON

LISTING OF FEDERAL TEST PROCEDURE RESULTS
ON INDIVIDUAL VEHICLES

NEWARK, N.J.

VEHICLE NUMBER	YEAR MAKE MODEL CID	TEST TYPE	HC	CO	CO2	NOXC	FUEL ECONOMY	*----------LIGHT HYDROCARBONS----------* METHANE (CH4)	ETHANE (C2H6)	PROPANE (C3H8)	C2 UNSATURATES ETHYLENE+ACETYLENE (C2H4)	(C2H2)	ALIPHATIC ALDEHYDES (R-CHO)
75	1972 VOLK SEDA 97	COLD TRANS	2.32	31.71	338.13	4.60	22.45	.06	.06	0.00		.23	.16
		COLD STAB	1.61	27.24	331.69	2.39	23.38	.04	.05	0.00		.17	.10
		HOT TRANS	1.76	23.18	311.56	4.01	25.10	.04	.04	0.00		.16	.13
IHC =	150 PPM HEXANE	HOT STAB	1.53	25.81	341.59	4.23	22.93	.04	.04	0.00		.15	.12
ICO =	1.00 PERCENT CO												
		1972 FTP	1.95	29.38	334.77	3.45	22.93	.05	.05	0.00		.20	.13
OTHER TESTS: MODAL		1975 FTP	1.79	27.35	327.52	3.29	23.62	.05	.05	0.00		.18	.12
		HOT START	1.64	24.55	327.21	3.48	23.92	.04	.04	0.00		.16	.12
		HFET	.82	9.54	229.30	2.90	35.95						
76	1971 AMER AMBA 304	COLD TRANS	6.14	13.28	594.40	6.03	13.98	.03	.04	0.00		.12	.39
		COLD STAB	3.08	14.27	614.50	2.62	13.72	.03	.05	0.00		.13	.34
		HOT TRANS	6.50	10.89	504.37	6.36	16.37	.03	.05	0.00		.15	.43
IHC =	400 PPM HEXANE	HOT STAB	3.83	10.18	594.68	5.53	14.25	.03	.05	0.00		.12	.38
ICO =	.80 PERCENT CO												
		1972 FTP	4.54	13.80	604.88	4.25	13.85	.03	.05	0.00		.13	.36
OTHER TESTS: NONE		1975 FTP	4.64	13.15	580.32	4.34	14.42	.03	.05	0.00		.13	.38
		HOT START	5.11	10.52	551.45	4.38	15.19	.03	.05	0.00		.14	.41
		HFET	9.45	3.63	392.50	6.73	20.73						
77	1971 BUIC SKYL 350	COLD TRANS	4.28	63.19	433.96	2.30	16.23	.14	.08	0.00		.23	.22
		COLD STAB	3.84	99.33	585.55	1.95	11.77	.14	.09	0.00		.25	.17
		HOT TRANS	3.25	44.76	515.35	3.48	14.89	.08	.07	0.00		.19	.23
IHC =	200 PPM HEXANE	HOT STAB	3.65	81.84	568.24	2.11	12.53	.14	.11	0.00		.24	.17
ICO =	3.30 PERCENT CO												
		1972 FTP	4.05	82.03	512.99	2.11	13.56	.14	.09	0.00		.24	.19
OTHER TESTS: NEW JERSEY		1975 FTP	3.77	77.00	535.19	2.44	13.28	.12	.08	0.00		.23	.19
		HOT START	3.46	64.09	542.92	2.63	13.56	.11	.09	0.00		.22	.20
		HFET	1.45	13.52	362.20	2.88	22.87						

N.J. IHC = 200P PPM HEXANE
N.J. ICO = 4.75P PERCENT CO

EMISSION RESULTS EXPRESSED IN GRAMS/MILE - FUEL ECONOMY IN MILES/GALLON

LISTING OF FEDERAL TEST PROCEDURE RESULTS
ON INDIVIDUAL VEHICLES

NEWARK, N.J.

VEHICLE NUMBER	YEAR MAKE MODEL CID	TEST TYPE	HC	CO	CO2	NOXC	FUEL ECONOMY	*----------LIGHT HYDROCARBONS----------* METHANE (CH4)	ETHANE (C2H6)	PROPANE (C3H8)	C2 UNSATURATES ETHYLENE+ACETYLENE (C2H4) (C2H2)	ALIPHATIC ALDEHYDES (R-CHO)
78	1971 BUIC ELEC 455	COLD TRANS	12.86	78.70	815.57	6.10	9.06	.18	.23	0.00	.56	.31
		COLD STAB	12.38	48.28	874.70	3.16	8.93	.16	.20	0.00	.48	.41
		HOT TRANS	8.97	22.85	742.06	6.88	11.01	.09	.14	0.00	.36	.18
IHC = 1600 PPM HEXANE		HOT STAB	12.55	41.39	852.05	5.60	9.28	.14	.19	0.00	.46	.24
ICO = 2.20 PERCENT CO												
		1972 FTP	12.61	62.34	848.48	4.56	8.99	.17	.22	0.00	.52	.36
OTHER TESTS: NONE		1975 FTP	11.55	47.60	828.42	4.78	9.44	.14	.19	0.00	.46	.33
		HOT START	16.84	32.51	799.40	4.96	10.03	.11	.17	0.00	.41	.21
		HFET	4.20	8.27	515.30	.57	16.39					
79	1971 CADI DEVI 472	COLD TRANS	2.26	63.87	982.26	3.41	8.14	.04	.04	0.00	.19	.28
		COLD STAB	.61	25.67	1010.59	2.23	8.43	.02	.02	0.00	.08	.14
		HOT TRANS	.99	14.97	880.14	4.06	9.79	.02	.01	0.00	.08	.14
IHC = 150 PPM HEXANE		HOT STAB	.48	24.24	982.46	3.13	8.68	.02	0.00	0.00	.07	.12
ICO = .80 PERCENT CO												
		1972 FTP	1.40	43.96	997.03	2.79	8.29	.03	.03	0.00	.14	.20
OTHER TESTS: NEW JERSEY		1975 FTP	1.06	30.61	969.17	2.97	8.70	.03	.02	0.00	.10	.17
		HOT START	.73	19.80	933.48	3.06	9.18	.02	.00	0.00	.08	.13
		HFET	.15	4.43	613.40	3.10	14.30					
N.J. IHC = 250 PPM HEXANE												
N.J. ICO = .50 PERCENT CO												
80	1971 CHEV VEGA 140	COLD TRANS	2.79	68.97	368.89	2.67	18.26	.11	.07	0.00	.30	.08
		COLD STAB	2.02	37.62	354.40	1.92	21.14	.07	.06	0.00	.24	.08
		HOT TRANS	2.06	31.38	310.84	2.51	24.20	.08	.06	0.00	.24	.08
IHC = 220 PPM HEXANE		HOT STAB	2.04	38.43	308.62	2.45	23.64	.08	.06	0.00	.23	.08
ICO = 7.00 PERCENT CO												
		1972 FTP	2.39	52.63	361.33	2.28	19.65	.09	.07	0.00	.26	.08
OTHER TESTS: NEW JERSEY		1975 FTP	2.19	42.37	345.43	2.24	21.18	.08	.06	0.00	.25	.08
		HOT START	2.05	35.05	309.68	2.10	23.91	.08	.06	0.00	.23	.08
		HFET	1.52	27.48	249.90	.12	29.80					
N.J. IHC = 4[illegible] PPM HEXANE												
N.J. ICO = 4.30 PERCENT CO												

EMISSION RESULTS EXPRESSED IN GRAMS/MILE - FUEL ECONOMY IN MILES/GALLON

LISTING OF FEDERAL TEST PROCEDURE RESULTS
ON INDIVIDUAL VEHICLES

NEWARK, N.J.

VEHICLE NUMBER	YEAR MAKE MODEL CID	TEST TYPE	HC	CO	CO2	NOXC	FUEL ECONOMY	*----------LIGHT HYDROCARBONS----------* METHANE (CH4)	ETHANE (C2H6)	PROPANE (C3H8)	C2 UNSATURATES ETHYLENE (C2H4)	ACETYLENE (C2H2)	ALIPHATIC ALDEHYDES (R-CHO)
81	1971 CHEV CHEL 307	COLD TRANS	5.81	46.06	546.30	4.92	13.93	.10	.12	0.00		.22	.26
		COLD STAB	5.58	22.39	554.45	3.24	14.61	.06	.08	0.00		.18	.33
		HOT TRANS	3.94	19.83	509.19	5.05	16.05	.06	.08	0.00		.17	.20
IHC =	250 PPM HEXANE	HOT STAB	5.72	15.04	564.50	4.52	14.64	.05	.08	0.00		.16	.35
ICO =	1.50 PERCENT CO												
		1972 FTP	5.69	33.72	550.55	4.05	14.28	.08	.10	0.00		.20	.30
OTHER TESTS: NONE		1975 FTP	5.18	26.56	540.42	4.08	14.83	.07	.09	0.00		.18	.28
		HOT START	4.87	17.33	538.03	4.16	15.28	.06	.08	0.00		.17	.27
		HFET	2.56	14.35	377.50	4.89	21.74						
82	1971 CHEV CAPR 350	COLD TRANS	5.46	100.07	689.67	4.48	10.27	.16	.12	0.00		.27	.17
		COLD STAB	2.77	65.98	725.09	2.46	10.60	.11	.08	0.00		.22	.12
		HOT TRANS	2.38	34.46	644.82	4.42	12.56	.07	.07	0.00		.19	.17
IHC =	180 PPM HEXANE	HOT STAB	2.55	58.52	702.71	4.12	11.06	.10	.08	0.00		.21	.14
ICO =	4.40 PERCENT CO												
		1972 FTP	4.06	82.30	708.13	3.43	10.44	.14	.10	0.00		.25	.14
OTHER TESTS: NEW JERSEY		1975 FTP	3.22	64.40	695.90	3.41	10.99	.11	.09	0.00		.22	.14
		HOT START	2.47	47.00	675.00	3.36	11.73	.09	.07	0.00		.20	.15
		HFET	1.04	11.14	423.80	3.97	19.96						
N.J. IHC =	F PPM HEXANE												
N.J. ICO =	F PERCENT CO												
82R	1971 CHEV CAPR 350	COLD TRANS	3.92	31.09	679.08	5.47	11.99	.08	.10	0.00		.36	.25
		COLD STAB	3.87	31.97	661.74	2.67	12.25	.07	.06	0.00		.29	.27
		HOT TRANS	2.88	18.72	580.17	5.13	14.35	.05	.06	0.00		.26	.24
IHC =	90 PPM HEXANE	HOT STAB	3.09	23.26	651.99	5.03	12.71	.06	.07	0.00		.26	.24
ICO =	1.20 PERCENT CO												
		1972 FTP	3.89	31.55	670.04	4.01	12.13	.08	.08	0.00		.32	.26
OTHER TESTS: NEW JERSEY		1975 FTP	3.61	28.17	643.05	3.92	12.70	.07	.07	0.00		.30	.26
		HOT START	2.99	21.98	617.61	3.74	13.44	.06	.07	0.00		.26	.24
		HFET	.99	8.67	442.20	4.42	19.34						
N.J. IHC =	P PPM HEXANE												
N.J. ICO =	P PERCENT CO												

EMISSION RESULTS EXPRESSED IN GRAMS/MILE - FUEL ECONOMY IN MILES/GALLON

APPENDIX C

LISTING OF FEDERAL TEST PROCEDURE RESULTS
ON INDIVIDUAL VEHICLES

NEWARK, N.J.

VEHICLE NUMBER	YEAR MAKE MODEL CID	TEST TYPE	HC	CO	CO2	NOXC	FUEL ECONOMY	*----------LIGHT HYDROCARBONS----------* METHANE (CH4)	ETHANE (C2H6)	PROPANE (C3H8)	C2 UNSATURATES ETHYLENE (C2H4)	+ACETYLENE (C2H2)	ALIPHATIC ALDEHYDES (R-CHO)
83	1971 CHEV CHEL 350	COLD TRANS	3.96	67.25	793.82	4.55	9.73	.07	.08	0.00		.16	.14
		COLD STAB	2.90	47.97	680.23	2.82	11.60	.09	.08	0.00		.17	.17
		HOT TRANS	2.56	29.34	721.95	4.12	11.43	.06	.08	0.00		.15	.14
IHC =	800 PPM HEXANE	HOT STAB	2.62	40.27	692.40	4.18	11.62	.08	.07	0.00		.16	.18
ICO =	5.40 PERCENT CO												
		1972 FTP	3.41	57.20	734.60	3.65	10.63	.08	.08	0.00		.17	.16
OTHER TESTS:	NEW JERSEY	1975 FTP	3.02	46.86	714.99	3.53	11.12	.08	.08	0.00		.16	.15
		HOT START	2.59	35.04	706.55	3.42	11.53	.07	.07	0.00		.16	.16
		HFET	.99	13.20	605.40	3.67	14.10						
N.J. IHC =	F PPM HEXANE												
N.J. ICO =	F PERCENT CO												
84	1971 CHEV IMPA 350	COLD TRANS	21.73	128.87	818.08	7.43	8.15	.21	.18	0.00		.64	.38
		COLD STAB	7.87	22.45	661.82	3.86	12.29	.07	.08	0.00		.30	.51
		HOT TRANS	5.79	18.20	567.47	6.73	14.44	.06	.08	0.00		.27	.39
IHC =	450 PPM HEXANE	HOT STAB	3.74	18.06	644.81	6.83	12.96	.07	.09	0.00		.29	.38
ICO =	1.30 PERCENT CO												
		1972 FTP	14.50	73.39	736.61	5.57	9.88	.14	.13	0.00		.46	.45
OTHER TESTS:	NONE	1975 FTP	10.15	43.19	668.24	5.38	11.55	.10	.10	0.00		.36	.45
		HOT START	4.72	18.13	607.79	4.89	13.63	.06	.08	0.00		.28	.39
		HFET	4.19	6.35	450.50	6.81	18.73						
85	1971 CHEV CAPR 400	COLD TRANS	2.21	37.47	667.33	7.01	12.10	.11	.17	0.00		.32	.30
		COLD STAB	2.57	12.52	674.99	4.03	12.63	.05	.10	0.00		.23	.41
		HOT TRANS	2.63	15.14	625.40	7.23	13.50	.07	.14	0.00		.28	.45
IHC =	200 PPM HEXANE	HOT STAB	2.71	10.39	682.51	6.43	12.55	.04	.09	0.00		.22	.35
ICO =	.20 PERCENT CO												
		1972 FTP	2.40	24.46	671.32	5.45	12.37	.08	.13	0.00		.27	.36
OTHER TESTS:	NONE	1975 FTP	2.51	18.57	659.88	5.51	12.74	.07	.12	0.00		.26	.40
		HOT START	2.67	12.51	655.17	5.45	12.99	.06	.11	0.00		.25	.40
		HFET	.96	26.68	536.10	2.52	15.27						

EMISSION RESULTS EXPRESSED IN GRAMS/MILE - FUEL ECONOMY IN MILES/GALLON

LISTING OF FEDERAL TEST PROCEDURE RESULTS
ON INDIVIDUAL VEHICLES

NEWARK, N.J.

VEHICLE NUMBER	YEAR MAKE MODEL CID	TEST TYPE	HC	CO	CO2	NOXC	FUEL ECONOMY	*----------LIGHT HYDROCARBONS----------* METHANE (CH4)	ETHANE (C2H6)	PROPANE (C3H8)	C2 UNSATURATES ETHYLENE+ (C2H4)	ACETYLENE (C2H2)	ALIPHATIC ALDEHYDES (R-CHO)
86	1971 CHRY NEWP 440	COLD TRANS	3.89	62.55	671.09	2.95	11.35	.13	.13	0.00		.38	.15
		COLD STAB	1.80	19.29	809.72	1.99	10.49	.05	.05	0.00		.21	.18
		HOT TRANS	2.50	22.20	635.57	3.63	13.08	.07	.08	0.00		.25	.23
IHC =	200 PPM HEXANE	HOT STAB	1.77	13.10	795.81	2.71	10.80	.05	.06	0.00		.20	.24
ICO =	.25 PERCENT CO												
		1972 FTP	2.80	40.00	743.36	2.45	10.89	.09	.09	0.00		.29	.17
OTHER TESTS: NONE		1975 FTP	2.42	28.99	733.67	2.64	11.28	.07	.08	0.00		.26	.19
		HOT START	2.12	17.46	719.11	2.75	11.78	.06	.07	0.00		.23	.23
		HFET	1.64	15.02	472.00	5.04	17.72						
87	1971 DATS 0510 97	COLD TRANS	3.35	19.48	321.64	5.46	24.46	.03	.04	0.00		.15	.36
		COLD STAB	2.86	22.64	331.23	4.05	23.61	.02	.03	0.00		.12	.37
		HOT TRANS	2.48	13.28	294.12	5.60	27.49	.02	.04	0.00		.14	.30
IHC =	70 PPM HEXANE	HOT STAB	2.53	22.11	316.80	5.01	24.68	.02	.03	0.00		.13	.29
ICO =	1.50 PERCENT CO												
		1972 FTP	3.09	21.12	326.64	4.73	24.01	.02	.03	0.00		.14	.36
OTHER TESTS: NONE		1975 FTP	2.86	19.43	319.13	4.76	24.74	.02	.03	0.00		.13	.35
		HOT START	2.51	17.88	305.95	4.56	25.95	.02	.04	0.00		.13	.29
		HFET	1.29	4.57	209.10	4.84	40.27						
88	1971 DODG CHAR 318	COLD TRANS	2.53	29.36	630.33	2.70	12.97	.06	.07	0.00		.16	.16
		COLD STAB	1.65	14.19	596.06	1.84	14.23	.04	.05	0.00		.13	.11
		HOT TRANS	1.35	5.96	559.89	2.50	15.48	.02	.05	0.00		.11	.19
IHC =	40 PPM HEXANE	HOT STAB	1.09	4.79	653.12	2.48	13.36	.02	.02	0.00		.08	.15
ICO =	.20 PERCENT CO												
		1972 FTP	2.07	21.45	612.47	2.25	13.60	.05	.06	0.00		.14	.13
OTHER TESTS: NONE		1975 FTP	1.75	15.07	593.25	2.20	14.26	.04	.05	0.00		.13	.14
		HOT START	1.21	5.35	608.49	2.08	14.30	.02	.03	0.00		.10	.17
		HFET	.53	2.65	400.80	1.67	21.83						

EMISSION RESULTS EXPRESSED IN GRAMS/MILE - FUEL ECONOMY IN MILES/GALLON

LISTING OF FEDERAL TEST PROCEDURE RESULTS
ON INDIVIDUAL VEHICLES

NEWARK, N.J.

VEHICLE NUMBER	YEAR MAKE MODEL CID	TEST TYPE	HC	CO	CO2	NOXC	FUEL ECONOMY	METHANE (CH4)	ETHANE (C2H6)	PROPANE (C3H8)	C2 UNSATURATES ETHYLENE (C2H4)	C2 UNSATURATES ACETYLENE (C2H2)	ALIPHATIC ALDEHYDES (R-CHO)
								----------LIGHT HYDROCARBONS----------					
89	1971 FORD P[illegible] 122	COLD TRANS	43.63	39.[illegible]5	303.23	3.88	17.65	.06	.07	0.00		.22	.45
		COLD STAB	4.22	6.[illegible]9	343.63	2.10	24.21	.02	.06	0.00		.21	.34
		HOT TRANS	26.16	11.18	268.58	3.91	24.04	.01	.03	0.00		.11	.53
IHC =	700 PPM HEXANE	HOT STAB	3.86	5.25	335.60	3.56	24.92	.02	.06	0.00		.18	.34
ICO =	.20 PERCENT CO												
		1972 FTP	23.[illegible]8	21.87	324.29	2.95	20.55	.04	.07	0.00		.21	.40
OTHER TESTS: NONE		1975 FTP	18.32	14.26	314.84	2.96	22.45	.03	.06	0.00		.18	.42
		HOT START	14.54	8.09	303.52	2.94	24.49	.02	.04	0.00		.15	.43
		HFET	22.36	2.79	204.00	4.38	31.78						
90	1971 FORD MAVE 200	COLD TRANS	2.83	35.27	389.58	5.63	19.55	.06	.05	0.00		.21	.26
		COLD STAB	2.41	37.44	379.72	3.99	19.89	.06	.04	0.00		.20	.23
		HOT TRANS	1.92	17.19	339.00	5.61	23.85	.04	.03	0.00		.16	.28
IHC =	150 PPM HEXANE	HOT STAB	2.30	35.98	382.35	5.17	19.89	.06	.04	0.00		.20	.25
ICO =	4.30 PERCENT CO												
		1972 FTP	2.61	36.40	384.44	4.77	19.73	.06	.04	0.00		.21	.25
OTHER TESTS: NEW JERSEY		1975 FTP	2.36	31.47	370.64	4.77	20.76	.05	.04	0.00		.19	.25
		HOT START	2.12	25.99	361.60	4.85	21.61	.05	.03	0.00		.18	.26
		HFET	1.64	3.27	253.60	3.73	33.87						
N.J. IHC =	F PPM HEXANE												
N.J. ICO =	F PERCENT CO												
91	1971 FORD TORI 302	COLD TRANS	3.96	29.38	645.07	6.80	12.58	.06	.09	0.00		.19	.38
		COLD STAB	2.85	28.26	614.48	3.92	13.29	.05	.06	0.00		.15	.34
		HOT TRANS	3.14	13.70	551.34	7.13	15.23	.03	.05	0.00		.14	.37
IHC =	100 PPM HEXANE	HOT STAB	2.77	24.75	609.15	6.24	13.51	.05	.05	0.00		.14	.28
ICO =	1.30 PERCENT CO												
		1972 FTP	3.35	29.[illegible]1	629.60	5.30	12.94	.05	.07	0.00		.17	.36
OTHER TESTS: NONE		1975 FTP	3.14	24.59	6[illegible]3.75	5.39	13.60	.05	.06	0.00		.15	.36
		HOT START	2.45	19.46	581.48	5.47	14.28	.04	.05	0.00		.14	.32
		HFET	1.91	4.57	421.10	5.22	2[illegible].43						

EMISSIONS RESULTS EXPRESSED IN GRAMS/MILE - FUEL ECONOMY IN MILES/GALLON

LISTING OF FEDERAL TEST PROCEDURE RESULTS
ON INDIVIDUAL VEHICLES

NEWARK, N.J.

VEHICLE NUMBER	YEAR MAKE MODEL CID	TEST TYPE	HC	CO	CO2	NOXC	FUEL ECONOMY	*----------LIGHT HYDROCARBONS----------* METHANE (CH4)	ETHANE (C2H6)	PROPANE (C3H8)	C2 UNSATURATES ETHYLENE+ACETYLENE (C2H4) (C2H2)	ALIPHATIC ALDEHYDES (R-CHO)
92	1971 FORD GALA 351	COLD TRANS	4.12	48.11	565.71	6.84	13.56	.07	.07	0.00	.25	.38
		COLD STAB	3.15	41.15	578.49	4.84	13.59	.08	.06	0.00	.26	.34
		HOT TRANS	3.15	26.93	532.03	7.94	15.44	.06	.05	0.00	.23	.45
IHC = 270 PPM HEXANE		HOT STAB	2.98	34.08	584.19	6.28	13.71	.07	.07	0.00	.24	.35
ICO = 5.60 PERCENT CO												
		1972 FTP	3.62	44.48	572.37	5.80	13.58	.08	.06	0.00	.25	.36
OTHER TESTS: NONE		1975 FTP	3.35	37.06	563.18	6.10	14.04	.07	.06	0.00	.25	.38
		HOT START	3.07	27.78	559.23	6.38	14.49	.07	.06	0.00	.23	.39
		HFET	2.09	7.01	417.30	6.25	20.41					
93	1971 FORD STAW 390	COLD TRANS	5.96	72.01	748.64	5.55	10.08	.11	.09	0.00	.36	.21
		COLD STAB	4.53	48.44	772.71	3.74	10.28	.08	0.00	0.00	.32	.30
		HOT TRANS	4.80	28.59	681.84	5.49	11.96	.06	.07	0.00	.25	.25
IHC = 650 PPM HEXANE		HOT STAB	4.76	41.38	762.61	5.09	10.53	.10	.11	0.00	.46	.26
ICO = 5.40 PERCENT CO												
		1972 FTP	5.22	59.72	761.19	4.60	10.18	.09	.04	0.00	.34	.25
OTHER TESTS: NONE		1975 FTP	4.90	47.88	742.96	4.59	10.65	.08	.04	0.00	.31	.27
		HOT START	4.78	35.26	723.95	4.51	11.17	.08	.09	0.00	.36	.25
		HFET	1.57	13.65	513.90	3.04	16.43					
94	1971 MERC MARO 400	COLD TRANS	5.12	99.27	683.73	5.79	10.37	.13	.11	0.00	.40	.20
		COLD STAB	2.88	49.82	693.12	4.50	11.37	.09	.07	0.00	.28	.28
		HOT TRANS	2.77	25.38	626.99	6.97	13.14	.06	.06	0.00	.24	.25
IHC = 200 PPM HEXANE		HOT STAB	2.51	37.37	689.21	5.31	11.74	.07	.07	0.00	.25	.27
ICO = 3.50 PERCENT CO												
		1972 FTP	3.95	73.49	688.63	5.12	10.87	.11	.09	0.00	.34	.24
OTHER TESTS: NEW JERSEY		1975 FTP	3.31	53.33	673.15	5.44	11.56	.09	.08	0.00	.29	.25
		HOT START	2.64	31.63	659.43	5.84	12.37	.07	.06	0.00	.25	.26
		HFET	1.45	9.70	487.00	5.75	17.51					

N.J. IHC = 100P PPM HEXANE
N.J. ICO = 3.00P PERCENT CO

EMISSION RESULTS EXPRESSED IN GRAMS/MILE - FUEL ECONOMY IN MILES/GALLON

LISTING OF FEDERAL TEST PROCEDURE RESULTS
ON INDIVIDUAL VEHICLES

NEWARK, N.J.

VEHICLE NUMBER	YEAR MAKE MODEL CID	TEST TYPE	HC	CO	CO2	NOXC	FUEL ECONOMY	*----------LIGHT HYDROCARBONS----------* METHANE (CH4)	ETHANE (C2H6)	PROPANE (C3H8)	C2 UNSATURATES ETHYLENE+ACETYLENE (C2H4) (C2H2)	ALIPHATIC ALDEHYDES (R-CHO)
95	1971 OLDS CUTL 350	COLD TRANS	6.26	36.19	536.85	6.22	14.69	.67	.85	0.00	2.64	.62
		COLD STAB	11.38	28.88	567.11	2.98	13.68	.06	.07	0.00	.28	.35
		HOT TRANS	11.28	15.56	541.20	17.07	14.76	.06	.06	0.00	.25	.23
IHC =	110 PPM HEXANE	HOT STAB	9.64	26.42	544.96	5.71	13.50	.05	.06	0.00	.25	.13
ICO =	2.00 PERCENT CO											
		1972 FTP	8.93	29.50	552.63	4.53	14.15	.36	.44	0.00	1.41	.48
OTHER TESTS: NONE		1975 FTP	10.30	25.51	553.81	7.49	14.16	.19	.23	0.00	.76	.37
		HOT START	13.43	18.09	569.23	9.59	14.07	.05	.06	0.00	.25	.17
		HFET	6.96	4.31	365.20	4.13	22.52					
96	1971 OLDS DELT 455	COLD TRANS	5.56	129.09	312.03	5.54	16.67					
		COLD STAB	4.16	69.49	601.38	2.60	12.26					
		HOT TRANS	4.66	76.73	557.55	3.50	12.81					
IHC =	540 PPM HEXANE	HOT STAB	4.19	69.37	604.86	5.09	12.21					
ICO =	2.00 PERCENT CO											
		1972 FTP	4.83	98.02	462.88	4.01	14.04					
OTHER TESTS: NONE		1975 FTP	4.58	83.73	529.87	3.45	13.13					
		HOT START	4.41	72.89	582.21	3.06	12.49					
		HFET	3.30	39.82	496.80	3.76	15.66					
97	1971 PLYM V LT 225	COLD TRANS	5.[illegible]4	99.42	376.66	4.53	16.22	.12	.06	0.00	.28	.10
		COLD STAB	4.[illegible]9	72.52	370.43	4.15	17.85	.12	.09	0.00	.32	.14
		HOT TRANS	3.21	66.86	337.80	4.59	19.59	.06	.04	0.00	.18	.11
IHC =	300 PPM HEXANE	HOT STAB	3.97	66.95	376.85	4.16	17.94	.11	.10	0.00	.34	.15
ICO =	2.90 PERCENT CO											
		1972 FTP	4.54	84.91	373.41	4.33	17.03	.12	.08	0.00	.30	.12
OTHER TESTS: NONE		1975 FTP	4.[illegible]4	76.39	352.81	4.35	17.91	.10	.07	0.00	.27	.12
		HOT START	3.6[illegible]	66.91	358.16	4.42	18.70	.09	.07	0.00	.26	.13
		HFET	1.85	50.44	285.30	4.39	23.96					

EMISSION RESULTS EXPRESSED IN GRAMS/MILE - FUEL ECONOMY IN MILES/GALLON

LISTING OF FEDERAL TEST PROCEDURE RESULTS
ON INDIVIDUAL VEHICLES

NEWARK, N.J.

VEHICLE NUMBER	YEAR MAKE MODEL CID	TEST TYPE	HC	CO	CO2	NOXC	FUEL ECONOMY	*----------LIGHT HYDROCARBONS----------* METHANE (CH4)	ETHANE (C2H6)	PROPANE (C3H8)	C2 UNSATURATES ETHYLENE (C2H4)	+ACETYLENE (C2H2)	ALIPHATIC ALDEHYDES (R-CHO)
98	1971 PLYM FRY3 318	COLD TRANS	4.64	102.67	559.64	5.18	12.06	.23	.18	0.00		.48	.18
		COLD STAB	4.57	123.34	498.95	3.62	12.55	.26	.18	0.00		.50	.18
		HOT TRANS	3.04	62.97	506.21	2.35	16.94	.16	.16	0.00		.41	.17
IHC = 120 PPM HEXANE		HOT STAB	3.89	100.71	497.95	4.76	13.28	.22	.17	0.00		.47	.16
ICO = 1.50 PERCENT CO													
		1972 FTP	4.60	113.45	528.00	4.37	12.31	.25	.18	0.00		.49	.18
OTHER TESTS: NEW JERSEY		1975 FTP	4.17	102.62	513.42	3.60	13.38	.23	.18	0.00		.47	.18
		HOT START	3.48	76.57	501.91	3.10	14.81	.19	.17	0.00		.44	.17
		HFET	1.47	27.51	383.50	1.76	20.57						
N.J. IHC = 380P PPM HEXANE													
N.J. ICO = 7.00F PERCENT CO													
98R	1971 PLYM FRY3 318	COLD TRANS	8.09	106.22	539.50	6.58	12.12	.25	.20	0.00		.65	.29
		COLD STAB	5.19	105.54	480.92	3.90	13.38	.24	.14	0.00		.54	.23
		HOT TRANS	4.63	53.96	493.76	7.23	14.96	.15	.14	0.00		.43	.27
IHC = 1500 PPM HEXANE		HOT STAB	5.40	92.80	475.96	6.05	13.89	.19	.13	0.00		.45	.22
ICO = 6.00 PERCENT CO													
		1972 FTP	6.58	105.87	508.96	5.18	12.75	.24	.17	0.00		.59	.26
OTHER TESTS: NEW JERSEY		1975 FTP	5.63	91.61	496.48	5.36	13.48	.22	.15	0.00		.53	.25
		HOT START	5.03	74.20	484.48	5.53	14.38	.17	.14	0.00		.44	.24
		HFET	2.91	32.13	400.90	6.13	19.27						
N.J. IHC = 200P PPM HEXANE													
N.J. ICO = 3.00P PERCENT CO													
99	1971 PONT LEMA 350	COLD TRANS	5.06	75.42	683.29	2.88	10.85	.12	.11	0.00		.24	.14
		COLD STAB	3.50	72.17	644.88	2.26	11.54	.13	.08	0.00		.24	.21
		HOT TRANS	2.77	33.64	567.19	4.12	14.11	.08	.08	0.00		.19	.26
IHC = 230 PPM HEXANE		HOT STAB	4.02	69.45	605.45	2.64	12.20	.12	.10	0.00		.25	.19
ICO = 3.60 PERCENT CO													
		1972 FTP	4.25	73.72	663.27	2.55	11.20	.13	.09	0.00		.24	.18
OTHER TESTS: NONE		1975 FTP	3.62	62.32	631.59	2.89	11.98	.11	.08	0.00		.23	.21
		HOT START	3.42	52.31	587.13	3.43	13.05	.10	.09	0.00		.22	.22
		HFET	1.17	8.44	413.70	3.03	20.61						

EMISSION RESULTS EXPRESSED IN GRAMS/MILE - FUEL ECONOMY IN MILES/GALLON

LISTING OF FEDERAL TEST PROCEDURE RESULTS
ON INDIVIDUAL VEHICLES

NEWARK, N.J.

VEHICLE NUMBER	YEAR MAKE MODEL CID	TEST TYPE	HC	CO	CO2	NOXC	FUEL ECONOMY	*----------LIGHT HYDROCARBONS----------* METHANE (CH4)	ETHANE (C2H6)	PROPANE (C3H8)	C2 UNSATURATES ETHYLENE+ACETYLENE (C2H4) (C2H2)	ALIPHATIC ALDEHYDES (R-CHO)
100	1971 PONT SAFA 455	COLD TRANS	3.18	49.62	755.88	4.10	10.52	.06	.07	0.00	.26	.55
		COLD STAB	1.97	9.94	741.99	2.82	11.62	.02	.05	0.00	.21	.05
		HOT TRANS	1.74	8.[illegible]	674.09	4.08	12.82	.03	.05	0.00	.18	.60
IHC =	150 PPM HEXANE	HOT STAB	1.77	8.70	706.85	3.77	12.22	.02	0.00	0.00	0.00	.06
ICO =	.20 PERCENT CO											
		1972 FTP	2.55	28.93	744.64	3.43	11.06	.04	.06	0.00	.23	.29
OTHER TESTS: NONE		1975 FTP	2.15	17.58	726.33	3.43	11.67	.03	.05	0.00	.21	.30
		HOT START	1.75	8.36	691.17	3.32	12.50	.02	.02	0.00	.09	.32
		HEET	.61	3.82	479.90	3.11	18.19					
101	1971 TOYO CORO 71	COLD TRANS	2.57	15.12	290.36	4.32	27.54	.02	.03	0.00	.11	.29
		COLD STAB	2.72	20.37	318.13	3.18	24.74	.03	.04	0.00	.14	.27
		HOT TRANS	2.51	12.25	266.85	4.44	30.18	.02	.04	0.00	.12	.27
IHC =	160 PPM HEXANE	HOT STAB	2.68	18.48	319.87	3.96	24.83	.03	.05	0.00	.16	.30
ICO =	2.40 PERCENT CO											
		1972 FTP	2.64	17.85	304.84	3.72	26.01	.03	.04	0.00	.13	.28
OTHER TESTS: NONE		1975 FTP	2.63	17.[illegible]7	298.43	3.76	26.61	.03	.04	0.00	.13	.28
		HOT START	2.60	15.50	294.49	3.92	27.13	.03	.04	0.00	.14	.29
		HEET	1.48	4.19	205.40	4.18	40.96					
102	1971 VOLK SEDA 97	COLD TRANS	5.55	55.52	301.98	2.81	21.82	.09	.05	0.00	.15	.11
		COLD STAB	3.50	36.41	347.14	1.77	21.36	.05	.05	0.00	.13	.10
		HOT TRANS	2.97	27.50	284.68	2.68	26.31	.04	.04	0.00	.09	.09
IHC =	220 PPM HEXANE	HOT STAB	3.09	33.28	349.87	2.58	21.54	.06	.06	0.00	.13	.12
ICO =	2.70 PERCENT CO											
		1972 FTP	4.48	45.56	325.52	2.27	21.58	.07	.05	0.00	.14	.11
OTHER TESTS: NONE		1975 FTP	3.78	37.41	320.80	2.23	22.62	.06	.05	0.00	.12	.10
		HOT START	3.04	31.51	318.67	2.17	23.59	.05	.05	0.00	.11	.11
		HEET	.92	8.12	218.30	2.48	37.93					

EMISSION RESULTS EXPRESSED IN GRAMS/MILE - FUEL ECONOMY IN MILES/GALLON

LISTING OF FEDERAL TEST PROCEDURE RESULTS
ON INDIVIDUAL VEHICLES

NEWARK, N.J.

VEHICLE NUMBER	YEAR MAKE MODEL CID	TEST TYPE	HC	CO	CO2	NOXC	FUEL ECONOMY	*----------LIGHT HYDROCARBONS----------* METHANE (CH4)	ETHANE (C2H6)	PROPANE (C3H8)	C2 UNSATURATES ETHYLENE+ACETYLENE (C2H4)	(C2H2)	ALIPHATIC ALDEHYDES (R-CHO)
103	1970 BUIC RIVE 455	COLD TRANS	8.94	169.99	623.26	5.24	9.66	.36	.23	0.00		.63	.24
		COLD STAB	6.67	96.64	599.62	2.95	11.49	.34	.23	0.00		.63	.23
		HOT TRANS	4.95	53.26	563.87	5.48	13.38	.18	.17	0.00		.42	.23
IHC = 380 PPM HEXANE		HOT STAB	6.09	95.21	590.69	4.81	11.68	.30	.19	0.00		.58	.24
ICO = 8.00 PERCENT CO													
		1972 FTP	7.76	131.75	610.93	4.04	10.53	.35	.23	0.00		.63	.23
OTHER TESTS: NONE		1975 FTP	6.67	99.90	594.73	4.11	11.48	.30	.21	0.00		.57	.23
		HOT START	5.54	75.13	577.85	4.14	12.44	.24	.18	0.00		.51	.23
		HFET	2.43	21.17	470.10	4.11	17.37						
104	1970 CHEV CHEL 250	COLD TRANS	31.70	136.96	458.13	4.29	11.47	.29	.19	0.00		.45	.38
		COLD STAB	3.88	53.80	510.33	3.03	14.62	.13	.13	0.00		.29	.21
		HOT TRANS	3.91	46.53	460.33	4.57	16.26	.10	.11	0.00		.23	.21
IHC = 120 PPM HEXANE		HOT STAB	3.81	48.28	513.40	3.94	14.76	.11	.11	0.00		.28	.21
ICO = 3.20 PERCENT CO													
		1972 FTP	17.20	93.60	485.35	3.63	12.92	.20	.16	0.00		.37	.29
OTHER TESTS: NEW JERSEY		1975 FTP	9.62	68.93	485.95	3.71	14.21	.15	.14	0.00		.31	.25
		HOT START	3.85	47.44	488.00	3.84	15.44	.10	.11	0.00		.26	.21
		HFET	1.66	7.38	357.10	4.47	23.73						
N.J. IHC = F PPM HEXANE													
N.J. ICO = F PERCENT CO													
105	1970 CHEV MALI 307	COLD TRANS	5.19	56.42	446.63	4.31	16.09	.19	.23	0.00		.39	.33
		COLD STAB	4.60	69.83	437.80	2.23	15.79	.19	.19	0.00		.38	.23
		HOT TRANS	3.75	33.62	400.33	4.36	19.08	.14	.21	0.00		.35	.28
IHC = 280 PPM HEXANE		HOT STAB	4.51	63.52	425.24	3.96	16.46	.19	.22	0.00		.38	.24
ICO = 4.40 PERCENT CO													
		1972 FTP	4.88	63.41	442.03	3.23	15.93	.19	.21	0.00		.38	.28
OTHER TESTS: NONE		1975 FTP	4.49	57.19	429.40	3.24	16.64	.18	.21	0.00		.37	.26
		HOT START	4.15	49.21	413.32	3.31	17.62	.16	.21	0.00		.36	.26
		HFET	2.05	11.29	301.50	4.10	27.25						

EMISSION RESULTS EXPRESSED IN GRAMS/MILE - FUEL ECONOMY IN MILES/GALLON

LISTING OF FEDERAL TEST PROCEDURE RESULTS
OF INDIVIDUAL VEHICLES

NEWARK, N.J.

VEHICLE NUMBER	YEAR MAKE MODEL CID	TEST TYPE	HC	CO	CO2	NOXC	FUEL ECONOMY	METHANE (CH4)	ETHANE (C2H6)	PROPANE (C3H8)	C2 UNSATURATES ETHYLENE (C2H4)	C2 UNSATURATES ACETYLENE (C2H2)	ALIPHATIC ALDEHYDES (R-CHO)
			----------LIGHT HYDROCARBONS----------										
106	1970 CHEV IMPA 350	COLD TRANS	5.15	64.67	582.31	6.33	12.67	.13	.14	0.00		.25	.24
		COLD STAB	4.78	60.15	602.92	4.59	12.45	.12	.11	0.00		.22	.27
		HOT TRANS	3.98	40.40	562.17	6.78	13.91	.08	.11	0.00		.20	.28
IHC = 370 PPM HEXANE		HOT STAB	4.40	56.17	604.25	5.81	12.73	.11	.10	0.00		.21	.28
ICO = 7.20 PERCENT CO													
		1972 FTP	4.96	62.31	593.05	5.42	12.56	.12	.12	0.00		.23	.25
OTHER TESTS: NONE		1975 FTP	4.64	55.69	587.56	5.54	12.87	.11	.11	0.00		.22	.27
		HOT START	4.20	45.50	584.11	5.67	13.27	.10	.11	0.00		.21	.28
		HFET	2.38	13.96	428.40	5.71	19.38						
107	1970 CHEV IMPA 350	COLD TRANS	22.92	66.14	631.20	2.58	10.99	.09	.12	0.00		.25	.61
		COLD STAB	2.37	23.84	764.65	2.17	10.98	.05	.06	0.00		.15	.25
		HOT TRANS	8.25	13.96	582.79	2.60	14.07	.04	.08	0.00		.17	.63
IHC = 60 PPM HEXANE		HOT STAB	2.00	16.69	695.55	2.37	12.19	.04	.05	0.00		.14	.28
ICO = .50 PERCENT CO													
		1972 FTP	12.21	43.56	700.77	2.37	10.99	.07	.09	0.00		.20	.43
OTHER TESTS: NEW JERSEY		1975 FTP	8.20	29.33	687.56	2.37	11.68	.06	.07	0.00		.17	.43
		HOT START	4.99	15.39	641.57	2.31	13.02	.04	.06	0.00		.16	.44
		HFET	.64	4.75	471.80	2.00	18.44						
N.J. IHC = F PPM HEXANE													
N.J. ICO = F PERCENT CO													
108	1970 CHEV B SC 350	COLD TRANS	2.78	174.50	638.44	2.42	9.63	.44	.21	0.00		1.04	.04
		COLD STAB	4.35	119.23	697.39	1.55	9.88	.18	.12	0.00		.46	.07
		HOT TRANS	4.74	129.86	759.55	1.69	9.07	.16	.10	0.00		.42	.08
IHC = 240 PPM HEXANE		HOT STAB	1.36	83.06	546.85	2.23	13.02	.19	.09	0.00		.46	.09
ICO = 7.00 PERCENT CO													
		1972 FTP	3.63	145.69	669.17	1.97	9.76	.31	.16	0.00		.74	.05
OTHER TESTS: NEW JERSEY		1975 FTP	4.13	133.51	702.22	1.77	9.59	.23	.13	0.00		.57	.06
		HOT START	2.98	105.46	648.67	2.01	10.77	.17	.09	0.00		.44	.09
		HFET	.76	63.11	407.00	1.47	17.45						
N.J. IHC = 2,00 PPM HEXANE													
N.J. ICO = 4.30 PERCENT CO													

EMISSION RESULTS EXPRESSED IN GRAMS/MILE - FUEL ECONOMY IN MILES/GALLON

LISTING OF FEDERAL TEST PROCEDURE RESULTS
ON INDIVIDUAL VEHICLES

NEWARK, N.J.

VEHICLE NUMBER	YEAR MAKE MODEL CID	TEST TYPE	HC	CO	CO2	NOXC	FUEL ECONOMY	*----------LIGHT HYDROCARBONS----------* METHANE (CH4)	ETHANE (C2H6)	PROPANE (C3H8)	C2 UNSATURATES ETHYLENE+ACETYLENE (C2H4) (C2H2)	ALIPHATIC ALDEHYDES (R-CHO)
109	1970 CHEV IMPA 400	COLD TRANS	4.69	80.79	583.87	3.62	12.23	.22	.21	0.00	.32	.11
		COLD STAB	3.69	101.09	561.61	2.68	12.12	.23	.14	0.00	.40	.14
		HOT TRANS	3.13	57.06	274.74	1.00	23.71	.10	.14	0.00	.36	.16
IHC = 190 PPM HEXANE		HOT STAB	3.52	98.27	64.89	3.33	38.51	.23	.16	0.00	.41	.14
ICO = 6.80 PERCENT CO												
		1972 FTP	4.17	91.37	572.27	3.13	12.17	.23	.17	0.00	.36	.13
OTHER TESTS: NEW JERSEY		1975 FTP	3.74	84.90	487.92	2.42	14.02	.19	.16	0.00	.37	.14
		HOT START	3.33	78.55	165.34	.50	29.65	.17	.15	0.00	.38	.15
		HFET	2.71	157.66	284.70	1.19	16.41					
N.J. IHC = F PPM HEXANE												
N.J. ICO = F PERCENT CO												
110	1970 DODG CHAR 383	COLD TRANS	10.68	67.86	661.84	4.01	11.06	.19	.21	0.00	.73	.28
		COLD STAB	5.72	64.15	670.18	5.66	11.25	.18	.19	0.00	.70	.34
		HOT TRANS	4.86	37.19	702.09	3.88	11.44	.15	.22	0.00	.62	.28
IHC = 200 PPM HEXANE		HOT STAB	5.93	59.73	636.98	3.68	11.88	.18	.21	0.00	.70	.29
ICO = 2.80 PERCENT CO												
		1972 FTP	8.09	65.93	666.19	4.87	11.16	.19	.20	0.00	.72	.31
OTHER TESTS: NONE		1975 FTP	6.50	57.56	677.17	4.84	11.26	.18	.21	0.00	.69	.31
		HOT START	4.97	48.94	668.15	4.74	11.67	.17	.22	0.00	.66	.29
		HFET	1.70	13.50	411.00	3.29	20.28					
111	1970 FORD MAVR 200	COLD TRANS	8.07	94.29	292.14	2.35	19.05	.20	.14	0.00	.26	.16
		COLD STAB	5.44	94.52	323.32	1.70	18.15	.19	.15	0.00	.31	.15
		HOT TRANS	4.79	67.49	289.00	2.57	21.63	.13	.10	0.00	.21	.16
IHC = 280 PPM HEXANE		HOT STAB	5.11	85.43	332.33	2.16	18.38	.18	.17	0.00	.32	.15
ICO = 5.20 PERCENT CO												
		1972 FTP	6.70	94.41	308.40	2.01	18.57	.20	.15	0.00	.29	.16
OTHER TESTS: NONE		1975 FTP	5.80	87.10	307.54	2.07	19.18	.18	.14	0.00	.27	.16
		HOT START	4.95	76.85	311.59	2.23	19.81	.16	.14	0.00	.27	.16
		HFET	2.74	29.30	226.30	3.05	31.58					

EMISSION RESULTS EXPRESSED IN GRAMS/MILE - FUEL ECONOMY IN MILES/GALLON

LISTING OF FEDERAL TEST PROCEDURE RESULTS
ON INDIVIDUAL VEHICLES

NEWARK, N.J.

VEHICLE NUMBER	YEAR MAKE MODEL CID	TEST TYPE	HC	CO	CO2	NOXC	FUEL ECONOMY	*----------LIGHT HYDROCARBONS----------* METHANE (CH4)	ETHANE (C2H6)	PROPANE (C3H8)	C2 UNSATURATES ETHYLENE+ACETYLENE (C2H4)	(C2H2)	ALIPHATIC ALDEHYDES (R-CHO)
112	1970 FORD FALC 302	COLD TRANS	6.38	115.23	521.28	5.18	12.28	.34	.26	0.00		.76	.18
		COLD STAB	5.06	122.61	466.24	2.42	13.15	.39	.21	0.00		.73	.16
		HOT TRANS	4.07	61.52	471.28	5.79	15.28	.22	.19	0.00		.57	.19
IHC = 300 PPM HEXANE		HOT STAB	4.41	117.70	481.94	4.75	13.04	.32	.19	0.00		.65	.13
ICO = 2.50 PERCENT CO													
		1972 FTP	5.69	119.07	492.59	3.74	12.72	.37	.24	0.00		.75	.17
OTHER TESTS: NEW JERSEY		1975 FTP	5.06	104.42	478.94	3.91	13.47	.33	.22	0.00		.69	.17
		HOT START	4.25	90.81	476.84	4.04	14.02	.27	.19	0.00		.61	.16
		HEET	3.23	29.00	409.50	5.98	19.07						
N.J. IHC = 2[illegible] PPM HEXANE													
N.J. ICO = [illegible] PERCENT CO													
112R	1970 FORD FALC 302	COLD TRANS	1.87	95.89	517.91	4.89	13.16	.16	.11	0.00		.43	.19
		COLD STAB	4.38	63.22	537.16	2.45	13.65	.09	.07	0.00		.27	.17
		HOT TRANS	1.34	34.39	501.14	5.91	15.86	.07	.09	0.00		.27	.26
IHC = 300 PPM HEXANE		HOT STAB	4.29	58.[illegible]4	544.63	4.49	13.67	.08	.06	0.00		.27	.17
ICO = 2.50 PERCENT CO													
		1972 FTP	3.18	78.86	527.95	3.62	13.41	.12	.09	0.00		.35	.18
OTHER TESTS: NEW JERSEY		1975 FTP	3.03	62.08	523.37	3.90	14.08	.10	.08	0.00		.30	.20
		HOT START	2.88	46.72	523.81	4.01	14.64	.08	.08	0.00		.27	.21
		HEET	.77	15.51	379.50	4.70	21.84						
N.J. IHC = 3[illegible] PPM HEXANE													
N.J. ICO = 4.[illegible] PERCENT CO													
113	1970 FORD GALA 351	COLD TRANS	4.91	76.36	557.83	4.33	12.80	.08	.08	0.00		.17	.20
		COLD STAB	2.93	22.61	609.10	4.63	13.57	.05	.06	0.00		.14	.28
		HOT TRANS	2.85	14.11	503.15	4.57	16.61	.03	.04	0.00		.10	.28
IHC = 230 PPM HEXANE		HOT STAB	2.49	12.22	594.19	3.97	14.29	.03	.04	0.00		.12	.34
ICO = .20 PERCENT CO													
		1972 FTP	4.88	48.34	584.56	4.48	13.19	.06	.07	0.00		.15	.24
OTHER TESTS: NONE		1975 FTP	3.32	31.35	569.64	4.55	14.10	.05	.06	0.00		.14	.26
		HOT START	2.66	13.13	550.61	4.53	15.31	.03	.04	0.00		.11	.31
		HEET	1.94	1.[illegible]	383.60	4.10	21.81						

EMISSION RESULTS EXPRESSED IN GRAMS/MILE - FUEL ECONOMY IN MILES/GALLON

LISTING OF FEDERAL TEST PROCEDURE RESULTS
ON INDIVIDUAL VEHICLES

NEWARK, N.J.

VEHICLE NUMBER	YEAR MAKE MODEL CID	TEST TYPE	HC	CO	CO2	NOXC	FUEL ECONOMY	METHANE (CH4)	ETHANE (C2H6)	PROPANE (C3H8)	C2 UNSATURATES ETHYLENE+ACETYLENE (C2H4) (C2H2)	ALIPHATIC ALDEHYDES (R-CHO)
								----------LIGHT HYDROCARBONS----------				
114	1970 FORD LTD 351	COLD TRANS	10.18	166.66	577.86	5.43	10.18	.37	.19	0.00	1.03	.30
		COLD STAB	5.20	114.19	599.00	4.64	11.16	.22	.12	0.00	.60	.38
		HOT TRANS	4.54	58.11	544.32	6.66	13.65	.14	.13	0.00	.49	.19
IHC = 230 PPM HEXANE		HOT STAB	4.88	111.34	586.52	4.99	11.42	.19	.10	0.00	.55	.30
ICO = 10.00 PERCENT CO												
		1972 FTP	7.59	139.31	588.88	5.02	10.67	.29	.15	0.00	.81	.34
OTHER TESTS: NONE		1975 FTP	6.05	109.69	579.73	5.36	11.51	.23	.13	0.00	.66	.31
		HOT START	4.72	85.86	566.32	5.59	12.39	.17	.11	0.00	.52	.25
		HFET	2.34	13.09	417.80	5.02	19.91					
115	1970 FORD LTD 390	COLD TRANS	21.54	208.09	345.43	1.05	11.98	1.15	1.10	0.00	1.42	.62
		COLD STAB	3.12	62.32	643.55	1.82	11.81	.09	.07	0.00	.18	.20
		HOT TRANS	3.69	78.32	551.84	2.34	12.93	.08	.06	0.00	.16	.21
IHC = 550 PPM HEXANE		HOT STAB	3.05	49.84	605.65	.97	12.80	.07	.06	0.00	.15	.26
ICO = .50 PERCENT CO												
		1972 FTP	11.94	132.09	500.85	1.45	11.89	.60	.56	0.00	.77	.40
OTHER TESTS: NONE		1975 FTP	7.07	96.69	557.17	1.80	12.13	.31	.28	0.00	.43	.29
		HOT START	3.35	63.47	579.89	2.07	12.86	.08	.06	0.00	.15	.24
		HFET	1.94	33.51	438.90	2.68	17.83					
116	1970 MERC MARQ 429	COLD TRANS	14.08	109.68	614.15	5.61	10.68	.59	.34	0.00	1.00	.36
		COLD STAB	2.70	13.26	687.24	4.18	12.38	.05	.04	0.00	.16	.34
		HOT TRANS	3.38	16.16	568.69	6.42	14.68	.03	.04	0.00	.14	.30
IHC = 150 PPM HEXANE		HOT STAB	2.62	12.93	671.00	5.15	12.69	.03	.03	0.00	.13	.34
ICO = .20 PERCENT CO												
		1972 FTP	8.15	59.41	652.25	4.87	11.50	.31	.18	0.00	.56	.35
OTHER TESTS: NONE		1975 FTP	5.23	33.90	639.85	5.09	12.51	.16	.10	0.00	.33	.33
		HOT START	2.98	14.48	622.03	5.22	13.57	.03	.04	0.00	.14	.32
		HFET	2.26	20.93	447.80	5.98	18.19					

EMISSION RESULTS EXPRESSED IN GRAMS/MILE - FUEL ECONOMY IN MILES/GALLON

LISTING OF FEDERAL TEST PROCEDURE RESULTS
ON INDIVIDUAL VEHICLES

NEWARK, N.J.

VEHICLE NUMBER	YEAR MAKE MODEL CID	TEST TYPE	HC	CO	CO2	NOXC	FUEL ECONOMY	*----------LIGHT HYDROCARBONS----------* METHANE (CH4)	ETHANE (C2H6)	PROPANE (C3H8)	C2 UNSATURATES ETHYLENE (C2H4)	+ACETYLENE (C2H2)	ALIPHATIC ALDEHYDES (R-CHO)
117	1970 OLDS F85V 350	COLD TRANS	3.95	66.33	813.84	4.19	9.54	.08	.09	0.00		.19	.18
		COLD STAB	2.65	43.13	807.75	2.69	10.04	.07	.06	0.00		.16	.23
		HOT TRANS	4.02	35.61	730.45	3.81	11.11	.06	.09	0.00		.16	.20
IHC = 450 PPM HEXANE		HOT STAB	2.57	33.05	773.02	3.85	10.65	.06	.06	0.00		.14	.24
ICO = 1.10 PERCENT CO													
		1972 FTP	3.27	54.23	810.67	3.41	9.79	.07	.08	0.00		.18	.20
OTHER TESTS: NONE		1975 FTP	3.29	45.85	787.91	3.30	10.20	.07	.08	0.00		.17	.21
		HOT START	3.26	34.27	752.64	3.14	10.87	.06	.07	0.00		.15	.22
		HFET	1.49	16.55	568.70	3.16	14.81						
118	1970 OLDS SEDA 455	COLD TRANS	3.72	63.05	668.38	4.02	11.39	.14	.09	0.00		.41	.18
		COLD STAB	3.34	77.97	608.64	2.65	11.97	.16	.08	0.00		.47	.19
		HOT TRANS	2.54	37.03	566.13	4.03	14.04	.09	.06	0.00		.32	.17
IHC = 200 PPM HEXANE		HOT STAB	3.23	73.29	598.93	3.69	12.25	.15	.08	0.00		.43	.19
ICO = 5.60 PERCENT CO													
		1972 FTP	3.52	70.83	637.24	3.30	11.68	.15	.08	0.00		.44	.19
OTHER TESTS: NEW JERSEY		1975 FTP	3.20	63.73	609.34	3.31	12.33	.14	.08	0.00		.41	.19
		HOT START	2.90	55.93	583.23	3.27	13.05	.12	.07	0.00		.38	.18
		HFET	1.14	10.38	429.90	3.17	19.73						
N.J. IHC = F PPM HEXANE													
N.J. ICO = 10.00F PERCENT CO													
119	1970 PLYM FRY3 318	COLD TRANS	1[illegible].64	249.91	462.76	.81	9.98	.34	.22	0.00		.51	.20
		COLD STAB	6.21	11.42	553.91	3.65	15.00	.17	.15	0.00		.34	.17
		HOT TRANS	4.09	43.17	547.02	3.96	14.14	.10	.13	0.00		.26	.23
IHC = 100 PPM HEXANE		HOT STAB	4.04	25.52	631.94	.74	12.96	.08	.14	0.00		.26	.28
ICO = 1.50 PERCENT CO													
		1972 FTP	8.33	125.58	510.28	2.29	12.09	.25	.18	0.00		.42	.19
OTHER TESTS: NONE		1975 FTP	6.55	69.17	533.27	3.15	13.39	.19	.16	0.00		.35	.19
		HOT START	4.07	33.97	591.29	3.96	13.50	.09	.13	0.00		.26	.25
		HFET	2.80	27.57	371.70	3.58	20.94						

EMISSION RESULTS EXPRESSED IN GRAMS/MILE - FUEL ECONOMY IN MILES/GALLON

LISTING OF FEDERAL TEST PROCEDURE RESULTS
ON INDIVIDUAL VEHICLES

NEWARK, N.J.

VEHICLE NUMBER	YEAR MAKE MODEL CID	TEST TYPE	HC	CO	CO2	NOXC	FUEL ECONOMY	METHANE (CH4)	ETHANE (C2H6)	PROPANE (C3H8)	C2 UNSATURATES ETHYLENE+ACETYLENE (C2H4) (C2H2)	ALIPHATIC ALDEHYDES (R-CHO)
								----------LIGHT HYDROCARBONS----------				
120	1970 PLYM DUST 318	COLD TRANS	4.53	54.39	479.00	3.79	15.33	.07	.07	0.00	.25	.23
		COLD STAB	3.73	35.33	520.36	2.48	15.10	.07	.06	0.00	.25	.21
		HOT TRANS	3.12	20.86	439.67	3.96	18.40	.06	.05	0.00	.21	.20
IHC =	200 PPM HEXANE	HOT STAB	3.47	30.95	506.83	3.48	15.67	.07	.07	0.00	.24	.20
ICO =	1.80 PERCENT CO											
		1972 FTP	4.11	44.46	500.56	3.11	15.21	.07	.07	0.00	.25	.22
OTHER TESTS: NONE		1975 FTP	3.73	35.31	489.83	3.15	15.93	.07	.06	0.00	.24	.22
		HOT START	3.30	26.12	474.68	3.17	16.87	.06	.06	0.00	.23	.20
		HFET	1.26	7.65	329.70	3.51	25.67					
121	1970 PONT FIRE 350	COLD TRANS	11.04	72.41	780.86	3.38	9.55	.05	.06	0.00	.14	.28
		COLD STAB	7.74	41.57	585.52	2.28	13.14	.08	.06	0.00	.15	.24
		HOT TRANS	8.53	23.04	530.06	2.95	14.96	.04	.06	0.00	.13	.28
IHC =	1000 PPM HEXANE	HOT STAB	8.30	37.87	597.54	3.10	12.99	.08	.06	0.00	.15	.23
ICO =	1.00 PERCENT CO											
		1972 FTP	9.32	56.33	679.03	2.80	11.13	.06	.06	0.00	.14	.26
OTHER TESTS: NEW JERSEY		1975 FTP	8.63	42.86	610.60	2.69	12.58	.06	.06	0.00	.14	.26
		HOT START	8.41	30.77	565.24	2.48	13.86	.06	.06	0.00	.14	.25
		HFET	10.16	6.32	411.50	3.11	19.57					
N.J. IHC =	F PPM HEXANE											
N.J. ICO =	F PERCENT CO											
122	1970 PONT CATA 400	COLD TRANS	4.31	73.40	667.35	4.62	11.14	.10	.10	0.00	.19	.28
		COLD STAB	3.75	50.10	689.08	3.21	11.38	.10	.10	0.00	.19	.23
		HOT TRANS	2.97	22.47	607.30	5.42	13.61	.06	.09	0.00	.15	.31
IHC =	85 PPM HEXANE	HOT STAB	3.31	38.95	713.61	4.25	11.30	.09	.09	0.00	.17	.24
ICO =	1.25 PERCENT CO											
		1972 FTP	4.02	61.25	678.68	3.89	11.27	.10	.10	0.00	.19	.25
OTHER TESTS: NONE		1975 FTP	3.66	47.36	662.29	4.10	11.86	.09	.10	0.00	.18	.26
		HOT START	3.15	31.06	662.72	4.20	12.30	.08	.09	0.00	.16	.27
		HFET	1.78	7.61	465.10	5.71	18.39					

EMISSION RESULTS EXPRESSED IN GRAMS/MILE - FUEL ECONOMY IN MILES/GALLON

LISTING OF FEDERAL TEST PROCEDURE RESULTS
ON INDIVIDUAL VEHICLES

NEWARK, N.J.

VEHICLE NUMBER	YEAR MAKE MODEL CID	TEST TYPE	HC	CO	CO2	NOXC	FUEL ECONOMY	LIGHT HYDROCARBONS METHANE (CH4)	ETHANE (C2H6)	PROPANE (C3H8)	C2 UNSATURATES ETHYLENE (C2H4)	ACETYLENE (C2H2)	ALIPHATIC ALDEHYDES (R-CHO)
123	1970 TOYO CORO 71	COLD TRANS	10.95	43.60	235.21	3.86	26.22	.30	.20	0.00		.30	.27
		COLD STAB	2.38	11.93	271.76	3.14	29.78	.02	.03	0.00		.07	.24
		HOT TRANS	2.12	9.78	219.47	3.60	36.74	.02	.03	0.00		.06	.26
IHC = 250 PPM HEXANE		HOT STAB	2.25	9.12	254.48	3.54	32.16	.02	.03	0.00		.06	.25
ICO = 2.40 PERCENT CO													
		1972 FTP	6.48	27.09	254.27	3.48	27.96	.15	.11	0.00		.18	.26
OTHER TESTS: NONE		1975 FTP	4.07	17.86	249.97	3.41	30.50	.08	.07	0.00		.12	.25
		HOT START	2.19	9.44	237.72	3.28	34.20	.02	.03	0.00		.06	.25
		HFET	1.21	2.66	172.10	3.22	49.27						
124	1970 VOLK 2DRS 97	COLD TRANS	10.45	32.21	279.28	6.69	24.45	.04	.04	0.00		.16	.15
		COLD STAB	5.66	27.22	329.00	6.72	22.77	.04	.05	0.00		.19	.21
		HOT TRANS	2.96	26.13	267.10	6.31	27.95	.03	.03	0.00		.13	.14
IHC = 2000 PPM HEXANE		HOT STAB	4.88	28.74	369.90	6.15	20.61	.04	.05	0.00		.19	.24
ICO = 1.20 PERCENT CO													
		1972 FTP	7.95	29.61	305.20	6.71	23.54	.04	.04	0.00		.17	.18
OTHER TESTS: NONE		1975 FTP	5.91	27.95	301.88	6.60	24.35	.04	.04	0.00		.16	.18
		HOT START	3.96	27.49	320.69	7.41	23.58	.04	.04	0.00		.16	.19
		HFET	1.36	22.67	270.80	7.14	28.65						
125	1969 AMER AMBA 290	COLD TRANS	4.49	50.10	528.64	8.89	14.28	.13	.14	0.00		.32	.19
		COLD STAB	3.37	65.29	448.03	5.75	15.82	.17	.13	0.00		.30	.20
		HOT TRANS	2.94	37.12	458.86	9.25	16.86	.15	.15	0.00		.31	.19
IHC = 70 PPM HEXANE		HOT STAB	3.17	68.42	438.98	8.17	15.95	.17	.11	0.00		.30	.18
ICO = 1.85 PERCENT CO													
		1972 FTP	3.91	57.92	486.61	7.25	15.04	.15	.13	0.00		.31	.20
OTHER TESTS: NEW JERSEY		1975 FTP	3.48	54.37	467.58	7.35	15.73	.16	.14	0.00		.31	.20
		HOT START	3.06	53.44	448.49	7.51	16.37	.16	.13	0.00		.30	.18
		HFET	1.24	10.71	394.70	3.64	21.36						

N.J. IHC = 2000 PPM HEXANE
N.J. ICO = 6.00 PERCENT CO

EMISSION RESULTS EXPRESSED IN GRAMS/MILE - FUEL ECONOMY IN MILES/GALLON

LIST OF FEDERAL TEST PROCEDURE RESULTS
BY INDIVIDUAL VEHICLES

NEWARK, N.J.

VEHICLE NUMBER	YEAR MAKE MODEL CID	TEST TYPE	HC	CO	CO2	NOXC	FUEL ECONOMY	METHANE (CH4)	ETHANE (C2H6)	PROPANE (C3H8)	C2 UNSATURATES ETHYLENE+ACETYLENE (C2H4) (C2H2)	ALIPHATIC ALDEHYDES (R-CHO)
								#----------LIGHT HYDROCARBONS----------*				
126	1969 BUIC LESA 350	COLD TRANS	5.08	122.75	620.61	4.77	10.70	.16	.12	0.00	.33	.18
		COLD STAB	3.49	54.07	622.71	3.42	12.35	.10	.08	0.00	.26	.25
		HOT TRANS	2.74	27.29	573.23	5.51	14.20	.08	.07	0.00	.23	.26
IHC =	325 PPM HEXANE	HOT STAB	3.21	49.77	608.08	4.38	12.74	.10	.08	0.00	.26	.23
ICO =	3.40 PERCENT CO											
		1972 FTP	4.25	86.95	621.71	4.07	11.50	.13	.10	0.00	.29	.21
OTHER TESTS: NONE		1975 FTP	3.61	60.40	608.78	4.27	12.40	.11	.09	0.00	.27	.24
		HOT START	2.99	39.01	591.40	4.43	13.40	.09	.07	0.00	.24	.25
		HEET	1.36	8.32	441.60	4.43	19.35					
127	1969 CHEV NOVA 250	COLD TRANS	5.35	88.65	430.11	4.01	15.14	.16	.09	0.00	.47	
		COLD STAB	3.07	48.10	432.56	3.01	17.14	.08	.07	0.00	.28	
		HOT TRANS	2.58	20.40	402.45	4.69	20.05	.06	.05	0.00	.24	
IHC =	210 PPM HEXANE	HOT STAB	2.89	39.25	429.69	3.68	17.73	.08	.08	0.00	.28	
ICO =	6.50 PERCENT CO											
		1972 FTP	4.16	67.51	431.39	3.49	16.12	.12	.08	0.00	.37	
OTHER TESTS: NONE		1975 FTP	3.41	48.69	423.84	3.67	17.35	.09	.07	0.00	.31	
		HOT START	2.74	30.23	416.55	3.80	18.77	.07	.06	0.00	.26	
		HEET	1.67	7.71	278.90	4.77	29.95					
128	1969 CHEV CHEL 307	COLD TRANS	8.80	157.63	513.76	4.49	11.24	.16	.13	0.00	.24	.27
		COLD STAB	4.81	65.86	520.33	3.27	13.89	.13	.12	0.00	.22	.21
		HOT TRANS	4.08	41.93	489.78	5.36	15.61	.09	.10	0.00	.19	.26
IHC =	550 PPM HEXANE	HOT STAB	4.42	63.72	513.63	4.13	14.14	.12	.10	0.00	.20	.24
ICO =	2.50 PERCENT CO											
		1972 FTP	6.72	109.79	517.19	3.85	12.48	.14	.12	0.00	.23	.24
OTHER TESTS: NONE		1975 FTP	5.43	78.22	510.64	4.09	13.64	.12	.11	0.00	.22	.24
		HOT START	4.26	53.29	502.21	3.96	14.81	.10	.10	0.00	.20	.25
		HEET	2.59	19.81	406.80	1.23	19.96					

EMISSION RESULTS EXPRESSED IN GRAMS/MILE - FUEL ECONOMY IN MILES/GALLON

LISTING OF FEDERAL TEST PROCEDURE RESULTS
ON INDIVIDUAL VEHICLES

NEWARK, N.J.

VEHICLE NUMBER	YEAR MAKE MODEL CID	TEST TYPE	HC	CO	CO2	NOXC	FUEL ECONOMY	*----------LIGHT HYDROCARBONS----------* METHANE (CH4)	ETHANE (C2H6)	PROPANE (C3H8)	C2 UNSATURATES ETHYLENE+ACETYLENE (C2H4) (C2H2)	ALIPHATIC ALDEHYDES (R-CHO)
129	1969 CHEV IMPA 327	COLD TRANS	35.05	107.58	587.91	4.04	10.22	.19	.20	0.00	.53	.36
		COLD STAB	31.31	48.76	553.58	3.43	12.17	.14	.16	0.00	.42	.36
		HOT TRANS	27.25	34.85	541.56	5.64	13.00	.12	.18	0.00	.45	.45
IHC =	2000 PPM HEXANE	HOT STAB	29.29	28.24	565.81	3.71	12.62	.11	0.00	0.00	0.00	.38
ICO =	2.80 PERCENT CO											
		1972 FTP	33.10	76.91	570.01	3.73	11.15	.16	.18	0.00	.48	.36
OTHER TESTS: NONE		1975 FTP	36.97	57.07	557.37	4.16	11.91	.14	.17	0.00	.45	.39
		HOT START	28.31	31.40	554.20	4.83	12.80	.12	.09	0.00	.22	.41
		HFET	18.04	14.39	427.80	6.47	17.48					
130	1969 CHEV CAPR 350	COLD TRANS	8.71	170.59	418.47	3.30	12.43	.40	.16	0.00	.95	.18
		COLD STAB	4.94	107.75	462.84	2.87	13.70	.20	.09	0.00	.49	.15
		HOT TRANS	4.54	64.86	420.36	5.83	16.54	.18	.10	0.00	.49	.20
IHC =	270 PPM HEXANE	HOT STAB	4.99	109.82	456.65	3.03	13.76	.24	.10	0.00	.05	.16
ICO =	8.50 PERCENT CO											
		1972 FTP	6.75	137.83	441.60	3.08	13.06	.30	.12	0.00	.71	.16
OTHER TESTS: NONE		1975 FTP	5.61	109.98	442.12	3.77	14.06	.24	.11	0.00	.58	.17
		HOT START	4.78	88.30	439.28	4.28	14.96	.21	.10	0.00	.26	.18
		HFET	2.47	26.37	340.10	4.73	22.79					
131	1969 CHEV CAPR 350	COLD TRANS	8.59	197.68	659.03	2.43	8.90	.97	.82	0.00	1.48	.18
		COLD STAB	3.57	94.35	645.86	1.92	11.02	.14	.12	0.00	.34	.12
		HOT TRANS	3.01	62.15	597.16	2.88	12.60	.15	.15	0.00	.36	.12
IHC =	100 PPM HEXANE	HOT STAB	3.36	92.53	621.74	2.24	11.41	.14	.13	0.00	.34	.12
ICO =	1.00 PERCENT CO											
		1972 FTP	5.97	143.81	652.16	2.17	9.89	.54	.45	0.00	.88	.15
OTHER TESTS: NONE		1975 FTP	4.45	106.83	635.28	2.29	10.86	.32	.27	0.00	.58	.13
		HOT START	3.16	77.99	609.97	2.36	11.95	.14	.14	0.00	.35	.12
		HFET	1.56	39.83	481.40	2.37	16.60					

EMISSION RESULTS EXPRESSED IN GRAMS/MILE - FUEL ECONOMY IN MILES/GALLON

LISTING OF FEDERAL TEST PROCEDURE RESULTS
ON INDIVIDUAL VEHICLES

NEWARK, N.J.

VEHICLE NUMBER	YEAR MAKE MODEL CID	TEST TYPE	HC	CO	CO2	NOXC	FUEL ECONOMY	*----------LIGHT HYDROCARBONS----------* METHANE (CH4)	ETHANE (C2H6)	PROPANE (C3H8)	C2 UNSATURATES ETHYLENE (C2H4)	+ACETYLENE (C2H2)	ALIPHATIC ALDEHYDES (R-CHO)
132	1969 CHEV IMPA 327	COLD TRANS	13.60	208.26	430.95	2.99	11.07	.64	.52	0.00		.56	.28
		COLD STAB	8.51	128.26	455.01	3.36	12.98	.55	.39	0.00		.47	.24
		HOT TRANS	6.31	65.41	471.98	5.34	14.92	.27	.30	0.00		.32	.28
IHC =	360 PPM HEXANE	HOT STAB	6.57	113.16	467.19	2.74	13.33	.38	.26	0.00		.33	.24
ICO =	9.00 PERCENT CO												
		1972 FTP	11.04	166.55	443.49	3.18	11.99	.59	.45	0.00		.51	.26
OTHER TESTS:	NONE	1975 FTP	9.00	127.58	454.69	3.82	12.98	.49	.39	0.00		.45	.26
		HOT START	6.45	90.30	469.48	4.49	14.05	.33	.28	0.00		.33	.26
		HFET	2.70	21.97	362.50	1.76	21.88						
133	1969 CHRY NEWP 383	COLD TRANS	32.36	62.88	532.31	6.88	12.10	.17	.18	0.00		.23	.37
		COLD STAB	29.72	80.96	485.93	5.17	12.55	.19	.15	0.00		.21	.32
		HOT TRANS	25.99	40.35	482.95	7.66	14.11	.10	.13	0.00		.17	.42
IHC =	1520 PPM HEXANE	HOT STAB	30.18	73.79	513.86	6.32	12.23	.14	.12	0.00		.19	.30
ICO =	3.60 PERCENT CO												
		1972 FTP	30.98	72.30	508.13	5.99	12.33	.18	.16	0.00		.22	.35
OTHER TESTS:	NONE	1975 FTP	29.25	66.16	494.67	6.20	12.84	.16	.15	0.00		.21	.36
		HOT START	28.18	57.78	499.07	6.19	13.07	.12	.12	0.00		.18	.36
		HFET	18.43	14.15	400.70	6.29	18.44						
134	1969 DODG DART 225	COLD TRANS	5.47	170.58	355.32	1.77	13.85	.21	.11	0.00		.30	.09
		COLD STAB	3.95	50.91	399.85	3.65	18.13	.08	.07	0.00		.18	.14
		HOT TRANS	2.85	63.14	370.89	3.25	18.52	.09	.07	0.00		.19	.16
IHC =	220 PPM HEXANE	HOT STAB	2.94	51.30	388.87	1.63	18.54	.08	.06	0.00		.18	.18
ICO =	5.20 PERCENT CO												
		1972 FTP	4.21	108.19	378.53	2.75	15.80	.14	.09	0.00		.24	.12
OTHER TESTS:	NONE	1975 FTP	3.49	78.88	382.78	3.15	17.14	.11	.08	0.00		.21	.14
		HOT START	2.89	56.97	380.27	3.30	18.53	.09	.07	0.00		.18	.17
		HFET	1.52	24.42	246.40	3.78	26.14						

EMISSION RESULTS EXPRESSED IN GRAMS/MILE - FUEL ECONOMY IN MILES/GALLON

LISTING OF FEDERAL TEST PROCEDURE RESULTS
ON INDIVIDUAL VEHICLES

NEWARK, N.J.

VEHICLE NUMBER	YEAR MAKE MODEL CID	TEST TYPE	HC	CO	CO2	NOXC	FUEL ECONOMY	*----------LIGHT HYDROCARBONS----------* METHANE (CH4)	ETHANE (C2H6)	PROPANE (C3H8)	C2 UNSATURATES ETHYLENE+ACETYLENE (C2H4)	(C2H2)	ALIPHATIC ALDEHYDES (R-CHO)
135	1969 FORD FAIR 302	COLD TRANS	5.51	53.67	515.49	7.08	14.38	.16	.19	0.00		.39	.27
		COLD STAB	4.96	59.46	443.09	4.60	16.07	.18	.17	0.00		.37	.35
		HOT TRANS	4.15	29.34	458.38	8.13	17.15	.12	.16	0.00		.34	.38
IHC =	600 PPM HEXANE	HOT STAB	4.88	26.94	420.87	6.50	18.54	.17	.16	0.00		.36	.31
ICO =	2.67 PERCENT CO												
		1972 FTP	5.22	56.69	477.75	5.79	15.21	.17	.18	0.00		.38	.31
OTHER TESTS: NEW JERSEY		1975 FTP	4.85	50.05	462.17	6.07	15.96	.16	.17	0.00		.37	.34
		HOT START	4.53	28.09	438.83	7.78	17.85	.14	.16	0.00		.35	.35
		HFET	1.93	6.98	366.40	5.56	23.14						
N.J. IHC =	P PPM HEXANE												
N.J. ICO =	P PERCENT CO												
136	1969 FORD GALA 302	COLD TRANS	5.03	36.87	564.99	7.88	13.89	.09	.13	0.00		.20	.42
		COLD STAB	5.09	74.17	515.47	5.76	13.69	.12	.12	0.00		.19	.32
		HOT TRANS	4.40	34.88	532.40	8.14	14.76	.09	.01	0.00		.18	.39
IHC =	520 PPM HEXANE	HOT STAB	4.97	68.57	516.37	7.23	13.87	.11	.11	0.00		.19	.30
ICO =	3.70 PERCENT CO												
		1972 FTP	5.06	56.32	539.17	6.78	13.79	.11	.13	0.00		.20	.37
OTHER TESTS: NONE		1975 FTP	4.89	55.77	530.28	6.85	14.01	.11	.09	0.00		.19	.36
		HOT START	4.70	52.45	524.04	6.73	14.28	.10	.06	0.00		.18	.35
		HFET	2.70	8.02	426.50	5.58	19.83						
137	1969 FORD LTD 351	COLD TRANS	3.86	49.20	561.03	5.47	13.65	.10	.09	0.00		.36	.28
		COLD STAB	3.23	51.95	530.92	4.28	14.25	.10	.08	0.00		.30	.34
		HOT TRANS	3.05	25.96	486.69	5.48	16.52	.06	.05	0.00		.24	.30
IHC =	170 PPM HEXANE	HOT STAB	3.14	48.46	531.43	5.02	14.37	.09	.05	0.00		.29	.31
ICO =	4.20 PERCENT CO												
		1972 FTP	3.53	50.54	545.33	4.85	13.96	.10	.08	0.00		.33	.31
OTHER TESTS: NONE		1975 FTP	3.31	44.25	525.05	4.85	14.67	.09	.07	0.00		.30	.32
		HOT START	3.10	37.69	510.01	4.92	15.33	.08	.05	0.00		.27	.31
		HFET	1.33	6.44	381.30	3.84	22.43						

EMISSION RESULTS EXPRESSED IN GRAMS/MILE - FUEL ECONOMY IN MILES/GALLON

LISTING OF FEDERAL TEST PROCEDURE RESULTS
OF INDIVIDUAL VEHICLES

NEWARK, N.J.

VEHICLE NUMBER	YEAR MAKE MODEL CID	TEST TYPE	HC	CO	CO2	NOXC	FUEL ECONOMY	METHANE (CH4)	ETHANE (C2H6)	PROPANE (C3H8)	C2 UNSATURATES ETHYLENE+ACETYLENE (C2H4) (C2H2)	ALIPHATIC ALDEHYDES (R-CHO)
								----------LIGHT HYDROCARBONS----------				
138	1969 FORD MUST 351	COLD TRANS	27.40	13.23	515.63	6.82	14.24	.04	.06	0.00	.26	.63
		COLD STAR	18.37	3.81	493.07	4.51	15.92	.02	.05	0.00	.23	.56
		HOT TRANS	26.24	3.96	432.14	7.57	17.02	.03	.08	0.00	.23	.62
IHC = 2000 PPM HEXANE		HOT STAR	31.69	3.10	468.24	6.26	15.52	.02	.05	0.00	.21	.57
ICO = .10 PERCENT CO												
		1972 FTP	22.69	8.32	503.87	5.62	15.07	.03	.05	0.00	.25	.59
OTHER TESTS: NEW JERSEY		1975 FTP	22.38	5.79	481.09	5.82	15.82	.02	.06	0.00	.24	.59
		HOT START	28.77	3.51	450.96	6.06	16.20	.02	.06	0.00	.22	.59
		HEET	17.83	3.32	382.00	7.55	20.00					
N.J. IHC = 2000F PPM HEXANE												
N.J. ICO = 0.00P PERCENT CO												
139	1969 FORD STAW 394	COLD TRANS	4.55	124.19	656.43	2.88	10.13	.14	.16	0.00	.28	.13
		COLD STAR	3.62	85.52	712.79	3.15	10.34	.13	.11	0.00	.24	.18
		HOT TRANS	4.27	61.26	652.31	3.94	11.65	.11	.13	0.00	.24	.18
IHC = 190 PPM HEXANE		HOT STAR	3.56	78.37	728.82	2.64	10.28	.14	.13	0.00	.22	.18
ICO = 6.00 PERCENT CO												
		1972 FTP	4.55	103.48	630.60	3.02	10.24	.14	.13	0.00	.26	.16
OTHER TESTS: NONE		1975 FTP	3.99	86.84	686.75	3.31	10.62	.13	.13	0.00	.25	.17
		HOT START	3.46	70.18	692.20	3.55	10.89	.12	.13	0.00	.23	.18
		HEET	2.19	35.34	519.60	3.15	15.25					
140	1969 MERC COUG 351	COLD TRANS	5.03	34.54	554.87	6.34	14.20	.08	.07	0.00	.33	.40
		COLD STAR	2.80	34.17	534.76	4.39	14.86	.07	.05	0.00	.26	.32
		HOT TRANS	2.65	22.10	394.29	7.97	20.29	.05	.05	0.00	.25	.36
IHC = 150 PPM HEXANE		HOT STAR	2.98	32.51	524.81	5.82	15.16	.07	.05	0.00	.27	.30
ICO = 2.10 PERCENT CO												
		1972 FTP	3.86	34.35	544.39	5.32	14.54	.07	.06	0.00	.30	.36
OTHER TESTS: NONE		1975 FTP	3.22	30.95	500.57	5.77	15.87	.06	.05	0.00	.27	.35
		HOT START	2.82	27.52	452.33	6.36	17.25	.06	.05	0.00	.26	.33
		HEET	1.34	9.91	375.30	4.86	23.11					

EMISSION RESULTS EXPRESSED IN GRAMS/MILE - FUEL ECONOMY IN MILES/GALLON

LISTING OF FEDERAL TEST PROCEDURE RESULTS
ON INDIVIDUAL VEHICLES

NEWARK, N.J.

VEHICLE NUMBER	YEAR MAKE MODEL CID	TEST TYPE	HC	CO	CO2	NOXC	FUEL ECONOMY	LIGHT HYDROCARBONS METHANE (CH4)	ETHANE (C2H6)	PROPANE (C3H8)	C2 UNSATURATES ETHYLENE (C2H4)	+ACETYLENE (C2H2)	ALIPHATIC ALDEHYDES (R-CHO)
141	1969 OLDS DELT 455	COLD TRANS	5.85	119.08	615.54	5.34	10.83	.16	.12	0.00		.48	.16
		COLD STAR	3.66	78.57	622.38	3.52	11.72	.14	.10	0.00		.41	.20
		HOT TRANS	3.04	58.45	552.76	5.08	13.83	.09	.09	0.00		.36	.17
IHC = 200 PPM HEXANE		HOT STAR	3.53	74.75	620.26	4.90	11.85	.14	.11	0.00		.41	.21
ICO = 3.80 PERCENT CO													
		1972 FTP	4.71	97.49	619.11	4.39	11.27	.15	.11	0.00		.45	.18
OTHER TESTS: NEW JERSEY		1975 FTP	3.94	79.33	601.98	4.32	12.02	.13	.10	0.00		.41	.18
		HOT START	3.35	63.12	587.95	4.21	12.72	.12	.10	0.00		.39	.19
		HEET	1.91	26.02	445.60	4.69	18.02						
N.J. IHC =	F PPM HEXANE												
N.J. ICO =	F PERCENT CO												
142	1969 PLYM VIP 318	COLD TRANS	5.13	129.62	495.54	2.83	12.37	.10	.08	0.00		.18	.11
		COLD STAR	3.81	54.31	533.38	3.51	13.93	.08	.07	0.00		.18	.23
		HOT TRANS	4.50	107.29	457.74	2.94	13.85	.13	.09	0.00		.23	.15
IHC = 1650 PPM HEXANE		HOT STAR	3.63	53.86	515.63	2.60	14.51	.07	.06	0.00		.17	.23
ICO = 3.90 PERCENT CO													
		1972 FTP	4.92	95.16	515.27	3.18	13.14	.09	.07	0.00		.18	.17
OTHER TESTS: NEW JERSEY		1975 FTP	4.48	86.23	504.95	3.21	13.56	.10	.08	0.00		.20	.18
		HOT START	4.05	79.43	487.92	3.27	14.19	.10	.07	0.00		.20	.19
		HEET	3.34	105.11	344.00	2.79	17.08						
N.J. IHC =	F PPM HEXANE												
N.J. ICO =	F PERCENT CO												
143	1969 PONT TEMP 350	COLD TRANS	7.05	117.98	526.46	6.15	12.09	.11	.09	0.00		.19	.22
		COLD STAR	5.24	69.60	513.86	4.23	13.87	.12	.10	0.00		.22	.23
		HOT TRANS	4.18	33.69	479.14	7.50	16.28	.08	.06	0.00		.16	.20
IHC = 260 PPM HEXANE		HOT STAR	4.79	58.90	509.03	5.65	14.38	.11	.10	0.00		.21	.25
ICO = 4.20 PERCENT CO													
		1972 FTP	5.13	75.71	519.89	5.15	12.96	.11	.10	0.00		.21	.23
OTHER TESTS: NONE		1975 FTP	5.32	69.74	506.98	5.52	14.01	.11	.09	0.00		.20	.22
		HOT START	4.60	45.53	494.72	5.85	15.23	.10	.08	0.00		.19	.23
		HEET	2.48	11.63	383.70	5.34	21.66						

EMISSION RESULTS EXPRESSED IN GRAMS/MILE - FUEL ECONOMY IN MILES/GALLON

LISTING OF FEDERAL TEST PROCEDURE RESULTS
ON INDIVIDUAL VEHICLES

NEWARK, N.J.

VEHICLE NUMBER	YEAR MAKE MODEL CID	TEST TYPE	HC	CO	CO2	NOXC	FUEL ECONOMY	METHANE (CH4)	ETHANE (C2H6)	PROPANE (C3H8)	C2 UNSATURATES ETHYLENE+ACETYLENE (C2H4) (C2H2)	ALIPHATIC ALDEHYDES (R-CHO)
								----------LIGHT HYDROCARBONS----------				
144	1969 PONT EXEC 400	COLD TRANS	5.14	69.53	799.58	6.64	10.63	.03	.06	0.00	.16	.38
		COLD STAB	4.21	8.67	680.43	5.73	12.55	.02	.06	0.00	.15	.55
		HOT TRANS	5.20	14.93	557.44	6.76	14.86	.04	.08	0.00	.17	.46
IHC = 180 PPM HEXANE		HOT STAB	3.29	14.65	535.12	6.10	15.61	.03	.07	0.00	.17	.57
ICO = 3.20 PERCENT CO												
		1972 FTP	4.65	37.85	694.39	6.17	11.55	.03	.06	0.00	.15	.47
OTHER TESTS: NONE		1975 FTP	4.67	22.93	652.88	6.20	12.61	.03	.06	0.00	.16	.49
		HOT START	4.20	14.79	545.80	6.32	15.24	.03	.07	0.00	.17	.51
		HFET	4.71	7.27	410.30	4.93	20.33					
145	1969 VOLK SEDA 91	COLD TRANS	4.10	45.64	278.08	2.87	24.46	.05	.05	0.00	.12	.15
		COLD STAB	3.16	38.84	320.82	1.72	22.65	.06	.06	0.00	.15	.14
		HOT TRANS	3.19	34.65	257.47	1.87	27.56	.04	.03	0.00	.09	.14
IHC = 150 PPM HEXANE		HOT STAB	3.22	38.43	321.48	2.63	22.64	.06	.06	0.00	.15	.15
ICO = 2.80 PERCENT CO												
		1972 FTP	3.61	42.09	300.36	2.27	23.48	.06	.06	0.00	.13	.15
OTHER TESTS: NONE		1975 FTP	3.36	39.10	294.74	2.00	24.19	.06	.05	0.00	.13	.14
		HOT START	3.21	36.62	290.84	1.80	24.75	.05	.05	0.00	.12	.15
		HFET	1.28	15.56	206.70	2.54	37.73					
146	1968 AMER REBE 360	COLD TRANS	7.05	99.26	500.00	4.46	13.08	.15	.11	0.00	.48	.23
		COLD STAB	3.46	45.98	488.11	3.26	15.53	.09	.06	0.00	.30	.38
		HOT TRANS	3.50	31.43	448.58	6.06	17.44	.08	.06	0.00	.33	.35
IHC = 220 PPM HEXANE		HOT STAB	3.46	56.56	452.74	4.10	16.06	.09	.07	0.00	.30	.34
ICO = 7.00 PERCENT CO												
		1972 FTP	5.18	71.49	493.80	3.84	14.26	.12	.08	0.00	.39	.31
OTHER TESTS: NONE		1975 FTP	4.21	52.98	479.77	4.27	15.40	.10	.07	0.00	.35	.34
		HOT START	3.48	44.53	450.75	4.58	16.69	.08	.07	0.00	.31	.34
		HFET	2.17	9.97	390.40	6.12	21.49					

EMISSION RESULTS EXPRESSED IN GRAMS/MILE - FUEL ECONOMY IN MILES/GALLON

LISTING OF FEDERAL TEST PROCEDURE RESULTS
ON INDIVIDUAL VEHICLES

NEWARK, N.J.

VEHICLE NUMBER	YEAR MAKE MODEL CID	TEST TYPE	HC	CO	CO2	NOXC	FUEL ECONOMY	*----LIGHT HYDROCARBONS----* METHANE (CH4)	ETHANE (C2H6)	PROPANE (C3H8)	C2 UNSATURATES ETHYLENE (C2H4)	+ACETYLENE (C2H2)	ALIPHATIC ALDEHYDES (P-CHO)
147	1968 BUIC SKYL 350	COLD TRANS	4.14	119.36	569.33	5.20	11.53	.16	.08	0.00		.42	
		COLD STAB	3.23	80.28	568.41	3.68	12.59	.13	.07	0.00		.38	
		HOT TRANS	2.75	44.40	518.22	6.22	14.87	.08	.06	0.00		.31	
IHC = 400 PPM HEXANE		HOT STAB	2.92	74.81	559.34	4.77	12.94	.12	.08	0.00		.37	
ICO = 4.40 PERCENT CO													
		1972 FTP	3.67	98.49	568.85	4.41	12.06	.15	.08	0.00		.40	
OTHER TESTS: NONE		1975 FTP	3.29	78.54	554.91	4.68	12.89	.12	.07	0.00		.37	
		HOT START	2.84	60.25	539.65	4.74	13.80	.10	.07	0.00		.34	
		HFET	1.13	8.88	395.40	4.68	21.49						
148	1968 CADI CALA 472	COLD TRANS	4.36	43.93	946.88	6.64	8.62	.14	.16	0.00		.48	.57
		COLD STAB	1.82	24.26	532.84	4.16	15.39	.07	.07	0.00		.25	.40
		HOT TRANS	2.55	15.84	708.27	9.26	11.97	.06	.09	0.00		.28	.38
IHC = 750 PPM HEXANE		HOT STAB	1.73	15.91	760.92	6.09	11.21	.05	.06	0.00		.25	.39
ICO = .55 PERCENT CO													
		1972 FTP	3.04	33.68	731.03	5.34	11.18	.11	.11	0.00		.36	.48
OTHER TESTS: NONE		1975 FTP	2.54	26.01	665.93	6.06	12.42	.08	.09	0.00		.30	.43
		HOT START	2.12	15.87	735.72	6.88	11.57	.06	.07	0.00		.26	.38
		HFET	1.05	6.61	537.50	7.61	16.10						
149	1968 CHEV CHEL 230	COLD TRANS	9.12	129.55	368.58	3.02	14.77	.10	.07	0.00		.32	.27
		COLD STAB	3.07	36.95	430.56	4.09	17.81	.07	.07	0.00		.25	.31
		HOT TRANS	4.32	38.79	391.64	4.89	19.07	.06	.05	0.00		.23	.30
IHC = 150 PPM HEXANE		HOT STAB	3.08	44.09	430.64	2.77	17.41	.08	.07	0.00		.26	.22
ICO = 4.20 PERCENT CO													
		1972 FTP	5.97	81.28	400.89	3.58	16.21	.09	.07	0.00		.28	.29
OTHER TESTS: NONE		1975 FTP	4.57	56.51	407.19	4.09	17.39	.07	.07	0.00		.25	.30
		HOT START	3.53	41.55	411.97	4.37	18.17	.07	.06	0.00		.24	.26
		HFET	.63	9.54	275.70	3.78	30.32						

EMISSION RESULTS EXPRESSED IN GRAMS/MILE - FUEL ECONOMY IN MILES/GALLON

LISTING OF FEDERAL TEST PROCEDURE RESULTS
ON INDIVIDUAL VEHICLES

NEWARK, N.J.

VEHICLE NUMBER	YEAR MAKE MODEL CID	TEST TYPE	HC	CO	CO2	NOXC	FUEL ECONOMY	METHANE (CH4)	ETHANE (C2H6)	PROPANE (C3H8)	C2 UNSATURATES ETHYLENE+ACETYLENE (C2H4) (C2H2)	ALIPHATIC ALDEHYDES (R-CHO)
								----------LIGHT HYDROCARBONS----------				
150	1968 CHEV BELA 307	COLD TRANS	10.63	183.98	501.53	2.80	10.77	.48	0.00	0.00	0.00	.28
		COLD STAB	10.35	92.59	472.79	3.78	13.63	.45	.32	0.00	.70	.34
		HOT TRANS	7.31	57.73	493.51	4.91	14.61	.25	.33	0.00	.47	.34
IHC = 850 PPM HEXANE		HOT STAB	9.37	84.85	473.89	2.57	13.93	.40	.27	0.00	.64	.33
ICO = 8.30 PERCENT CO												
		1972 FTP	10.48	136.34	486.55	3.31	12.09	.46	.17	0.00	.37	.31
OTHER TESTS: NONE		1975 FTP	9.58	101.89	484.36	3.89	13.15	.40	.26	0.00	.49	.33
		HOT START	8.39	71.87	483.28	4.06	14.25	.33	.30	0.00	.56	.33
		HFET	2.97	30.87	402.40	3.44	19.28					
151	1968 CHEV IMPA 327	COLD TRANS	9.48	174.27	505.99	4.54	10.96	.12	.11	0.00	.25	.13
		COLD STAB	4.36	67.85	554.22	2.91	13.16	.16	.10	0.00	.28	.16
		HOT TRANS	3.81	39.72	536.04	5.04	14.54	.12	.15	0.00	.28	.15
IHC = 1550 PPM HEXANE		HOT STAB	4.[illegible]8	61.76	570.15	4.17	13.05	.14	.09	0.00	.26	.17
ICO = 7.20 PERCENT CO												
		1972 FTP	6.81	118.79	531.13	3.69	12.00	.14	.10	0.00	.27	.15
OTHER TESTS: NONE		1975 FTP	5.26	82.[illegible]8	539.33	3.82	12.96	.14	.12	0.00	.28	.15
		HOT START	3.95	51.21	553.83	3.84	13.72	.13	.12	0.00	.27	.16
		HFET	1.70	12.04	439.70	3.39	19.13					
152	1968 CHEV BELA 307	COLD TRANS	9.08	58.06	450.22	6.52	15.56	.28	.24	0.00	.38	.29
		COLD STAB	13.84	88.86	405.63	3.98	15.06	.62	.39	0.00	.68	.38
		HOT TRANS	8.62	46.[illegible]7	403.09	6.24	17.65	.19	.16	0.00	.28	.34
IHC = 1600 PPM HEXANE		HOT STAB	13.06	85.59	399.87	5.99	15.41	.55	.39	0.00	.63	.35
ICO = 10.00 PERCENT CO												
		1972 FTP	11.58	74.12	426.97	5.20	15.30	.45	.32	0.00	.54	.34
OTHER TESTS: NEW JERSEY		1975 FTP	11.46	70.84	414.11	5.12	15.80	.43	.30	0.00	.51	.35
		HOT START	1[illegible].93	66.67	401.41	4.98	16.41	.38	.28	0.00	.46	.35
		HFET	3.00	20.[illegible]2	330.20	4.68	23.91					

N.J. IHC = 1400F PPM HEXANE
N.J. ICO = 7.90P PERCENT CO

EMISSION RESULTS EXPRESSED IN GRAMS/MILE - FUEL ECONOMY IN MILES/GALLON

LISTING OF FEDERAL TEST PROCEDURE RESULTS
ON INDIVIDUAL VEHICLES

NEWARK, N.J.

VEHICLE NUMBER	YEAR MAKE MODEL CID	TEST TYPE	HC	CO	CO2	NOXC	FUEL ECONOMY	*----------LIGHT HYDROCARBONS----------* METHANE (CH4)	ETHANE (C2H6)	PROPANE (C3H8)	C2 UNSATURATES ETHYLENE (C2H4)	+ACETYLENE (C2H2)	ALIPHATIC ALDEHYDES (R-CHO)
152R	1968 CHEV BELA 307	COLD TRANS	4.69	36.60	493.26	6.22	15.69	.10	.12	0.00		.37	.33
		COLD STAB	5.39	47.18	461.64	3.87	16.05	.14	.12	0.00		.42	.31
		HOT TRANS	3.88	22.15	429.69	6.11	18.61	.07	.11	0.00		.31	.35
IHC = 500 PPM HEXANE		HOT STAB	4.77	30.45	466.75	5.71	16.75	.09	.10	0.00		.34	.35
ICO = 3.60 PERCENT CO													
		1972 FTP	5.05	42.11	476.77	5.00	15.88	.12	.12	0.00		.39	.32
OTHER TESTS: NEW JERSEY		1975 FTP	4.83	38.17	459.43	4.97	16.60	.11	.12	0.00		.38	.32
		HOT START	4.34	26.48	449.01	5.13	17.60	.08	.11	0.00		.32	.35
		HFET	2.14	14.27	353.10	4.59	23.22						
N.J. IHC = 375P PPM HEXANE													
N.J. ICO = 5.50P PERCENT CO													
153	1968 CHEV STAW 307	COLD TRANS	5.97	74.53	722.09	3.65	10.34	.16	.14	0.00		.59	.27
		COLD STAB	4.01	72.41	656.85	2.86	11.33	.15	.11	0.00		.49	.32
		HOT TRANS	3.70	52.08	640.45	3.83	12.09	.11	.09	0.00		.43	.22
IHC = 400 PPM HEXANE		HOT STAB	3.77	57.74	623.58	3.35	12.22	.13	.10	0.00		.46	.25
ICO = 7.00 PERCENT CO													
		1972 FTP	4.95	73.43	688.08	3.24	10.83	.16	.12	0.00		.54	.29
OTHER TESTS: NONE		1975 FTP	4.33	67.30	665.80	3.29	11.30	.14	.11	0.00		.49	.28
		HOT START	3.74	55.03	631.65	3.38	12.16	.12	.09	0.00		.44	.23
154	1968 DODG CORO 383	COLD TRANS	5.23	61.61	649.39	4.75	11.64	.13	.15	0.00		.32	.30
		COLD STAB	4.23	49.13	638.26	3.17	12.18	.09	.12	0.00		.27	.41
		HOT TRANS	3.84	25.95	570.19	4.91	14.24	.08	.13	0.00		.25	.39
IHC = 100 PPM HEXANE		HOT STAB	4.31	38.34	614.53	4.36	12.91	.08	.10	0.00		.25	.42
ICO = .70 PERCENT CO													
		1972 FTP	4.71	55.10	643.59	3.93	11.91	.11	.13	0.00		.29	.36
OTHER TESTS: NONE		1975 FTP	4.33	45.37	621.98	3.97	12.55	.10	.12	0.00		.27	.38
		HOT START	3.93	32.41	593.31	3.88	13.52	.08	.11	0.00		.25	.41
		HFET	1.85	11.46	445.20	3.30	18.92						

EMISSION RESULTS EXPRESSED IN GRAMS/MILE - FUEL ECONOMY IN MILES/GALLON

LISTING OF FEDERAL TEST PROCEDURE RESULTS
ON INDIVIDUAL VEHICLES

NEWARK, N.J.

VEHICLE NUMBER	YEAR MAKE MODEL CID	TEST TYPE	HC	CO	CO2	NOXC	FUEL ECONOMY	*----------LIGHT HYDROCARBONS----------* METHANE (CH4)	ETHANE (C2H6)	PROPANE (C3H8)	C2 UNSATURATES ETHYLENE+ACETYLENE (C2H4) (C2H2)	ALIPHATIC ALDEHYDES (R-CHO)
155	1968 FORD STAW 289	COLD TRANS	5.05	63.52	470.97	4.74	15.12					
		COLD STAB	3.19	50.58	479.54	2.98	15.62					
		HOT TRANS	3.43	28.79	423.59	4.79	18.50					
IHC =	300 PPM HEXANE	HOT STAB	3.17	50.06	462.48	4.36	16.10					
ICO =	7.20 PERCENT CO											
		1972 FTP	4.88	56.51	475.44	3.82	15.38					
OTHER TESTS: NONE		1975 FTP	3.64	47.64	462.51	3.84	16.20					
		HOT START	3.29	39.88	443.87	3.82	17.17					
		HFET	1.51	6.08	333.50	4.09	25.51					
156	1968 FORD MUST 289	COLD TRANS	5.99	77.61	449.58	4.88	15.05	.10	.09	0.00	.22	.21
		COLD STAB	3.64	33.08	469.16	3.37	16.66	.06	.06	0.00	.15	.17
		HOT TRANS	4.36	22.51	427.05	5.51	18.64	.04	.06	0.00	.15	.22
IHC =	250 PPM HEXANE	HOT STAB	3.53	31.32	461.41	4.48	17.01	.05	.05	0.00	.14	.17
ICO =	1.30 PERCENT CO											
		1972 FTP	4.76	54.11	459.79	4.09	15.85	.08	.07	0.00	.18	.19
OTHER TESTS: NONE		1975 FTP	4.32	39.24	453.64	4.26	16.78	.06	.07	0.00	.16	.19
		HOT START	3.93	27.10	444.96	4.37	17.75	.05	.06	0.00	.15	.20
		HFET	3.74	6.08	300.30	4.47	27.58					
157	1968 FORD LTD 302	COLD TRANS	4.72	14.52	479.58	7.17	17.16	.03	.04	0.00	.21	.44
		COLD STAB	4.37	17.58	484.45	5.42	16.87	.03	.04	0.00	.20	.46
		HOT TRANS	3.77	9.95	449.75	7.51	18.59	.04	.05	0.00	.25	.40
IHC =	1550 PPM HEXANE	HOT STAB	4.66	14.47	479.26	6.58	17.17	.04	.04	0.00	.21	.48
ICO =	1.70 PERCENT CO											
		1972 FTP	4.54	16.11	482.12	6.26	17.01	.03	.04	0.00	.20	.45
OTHER TESTS: NONE		1975 FTP	4.28	14.87	473.98	6.35	17.37	.04	.04	0.00	.21	.44
		HOT START	4.23	12.31	465.13	6.38	17.83	.04	.05	0.00	.23	.44
		HFET	2.00	3.41	344.80	5.67	24.90					

EMISSION RESULTS EXPRESSED IN GRAMS/MILE - FUEL ECONOMY IN MILES/GALLON

LISTING OF FEDERAL TEST PROCEDURE RESULTS
ON INDIVIDUAL VEHICLES

NEWARK, N.J.

VEHICLE NUMBER	YEAR MAKE MODEL CID	TEST TYPE	HC	CO	CO2	NOXC	FUEL ECONOMY	*----LIGHT HYDROCARBONS----* METHANE (CH4)	ETHANE (C2H6)	PROPANE (C3H8)	C2 UNSATURATES ETHYLENE (C2H4)	+ACETYLENE (C2H2)	ALIPHATIC ALDEHYDES (R-CHO)
158	1968 FORD GALA 390	COLD TRANS	9.84	107.26	748.75	2.94	9.36	.07	.09	0.00		.14	.27
		COLD STAB	3.37	52.84	661.66	3.68	11.75	.09	.08	0.00		.15	.23
		HOT TRANS	10.00	34.27	625.26	4.01	12.49	.06	.06	0.00		.12	.45
IHC =	520 PPM HEXANE	HOT STAB	3.31	50.16	632.81	2.70	12.29	.08	.08	0.00		.15	.23
ICO =	3.20 PERCENT CO												
		1972 FTP	6.47	78.89	703.35	3.33	10.47	.08	.08	0.00		.15	.25
OTHER TESTS: NONE		1975 FTP	6.51	58.98	669.66	3.62	11.34	.08	.08	0.00		.14	.30
		HOT START	6.51	42.55	629.20	3.11	12.38	.07	.07	0.00		.14	.34
		HFET	2.43	7.26	480.10	2.75	17.78						
159	1968 MERC COUG 302	COLD TRANS	7.38	63.07	522.17	6.91	13.77	.16	.19	0.00		.25	.36
		COLD STAB	6.54	87.20	480.61	4.17	13.90	.25	.17	0.00		.27	.33
		HOT TRANS	6.11	54.89	442.48	6.73	16.19	.14	.18	0.00		.25	.41
IHC =	360 PPM HEXANE	HOT STAB	6.04	80.81	476.80	6.35	14.25	.20	.15	0.00		.24	.32
ICO =	8.40 PERCENT CO												
		1972 FTP	6.94	75.65	500.51	5.48	13.84	.21	.18	0.00		.26	.35
OTHER TESTS: NONE		1975 FTP	6.60	73.42	478.76	5.43	14.43	.20	.18	0.00		.26	.36
		HOT START	6.07	68.41	460.37	5.38	15.12	.18	.16	0.00		.24	.37
		HFET	3.83	28.87	347.00	5.49	21.94						
160	1968 OLDS CUTL 350	COLD TRANS	7.00	123.03	547.94	5.54	11.63	.21	.16	0.00		.25	.25
		COLD STAB	4.07	80.46	563.58	2.82	12.63	.14	.11	0.00		.19	.26
		HOT TRANS	3.91	47.45	510.53	5.49	14.85	.10	.08	0.00		.17	.28
IHC =	500 PPM HEXANE	HOT STAB	3.90	76.56	544.37	5.09	13.11	.13	.10	0.00		.18	.29
ICO =	4.60 PERCENT CO												
		1972 FTP	5.47	100.83	556.09	4.12	12.13	.18	.13	0.00		.22	.25
OTHER TESTS: NONE		1975 FTP	4.63	80.21	545.89	4.11	12.93	.15	.11	0.00		.20	.26
		HOT START	3.91	62.63	528.17	4.08	13.89	.12	.09	0.00		.18	.29
		HFET	2.24	20.06	394.80	4.64	20.48						

EMISSION RESULTS EXPRESSED IN GRAMS/MILE - FUEL ECONOMY IN MILES/GALLON

LISTING OF FEDERAL TEST PROCEDURE RESULTS
ON INDIVIDUAL VEHICLES

NEWARK, N.J.

VEHICLE NUMBER	YEAR MAKE MODEL CID	TEST TYPE	HC	CO	CO2	NOXC	FUEL ECONOMY	METHANE (CH4)	ETHANE (C2H6)	PROPANE (C3H8)	C2 UNSATURATES ETHYLENE (C2H4)	C2 UNSATURATES ACETYLENE (C2H2)	ALIPHATIC ALDEHYDES (R-CHO)
								----------LIGHT HYDROCARBONS----------					
161	1968 PLYM FRY3 318	COLD TRANS	6.40	121.89	437.60	4.11	13.67	.21	.13	0.00		.52	.19
		COLD STAB	3.98	60.58	454.58	4.80	15.78	.12	.08	0.00		.31	.20
		HOT TRANS	3.58	37.80	440.14	6.98	17.37	.10	.07	0.00		.30	.23
IHC = 220 PPM HEXANE		HOT STAB	3.75	51.88	452.48	3.77	16.26	.11	.07	0.00		.30	.20
ICO = 5.40 PERCENT CO													
		1972 FTP	5.14	89.93	446.45	4.47	14.69	.16	.10	0.00		.41	.20
OTHER TESTS: NEW JERSEY		1975 FTP	4.37	66.98	447.14	5.25	15.67	.13	.09	0.00		.35	.21
		HOT START	3.67	45.14	446.57	5.91	16.77	.10	.07	0.00		.30	.22
		HFET	2.33	26.55	355.40	5.43	21.94						
N.J. IHC = P PPM HEXANE													
N.J. ICO = P PERCENT CO													
162	1968 PONT CATA 400	COLD TRANS	5.50	64.11	573.87	5.36	12.82	.14	.11	0.00		.43	.38
		COLD STAB	3.72	77.73	481.56	2.84	14.42	.13	.07	0.00		.35	.19
		HOT TRANS	3.35	54.81	494.90	5.09	15.00	.11	.08	0.00		.32	.25
IHC = 150 PPM HEXANE		HOT STAB	4.41	101.22	544.86	4.92	12.39	.16	.09	0.00		.41	.20
ICO = 4.60 PERCENT CO													
		1972 FTP	4.57	71.21	525.75	4.04	13.61	.14	.09	0.00		.39	.28
OTHER TESTS: NEW JERSEY		1975 FTP	3.98	68.67	504.20	3.97	14.21	.13	.08	0.00		.36	.25
		HOT START	3.90	78.48	520.95	4.01	13.52	.13	.08	0.00		.37	.23
		HFET	1.93	24.84	372.10	4.32	21.27						
N.J. IHC = 200P PPM HEXANE													
N.J. ICO = 5.30P PERCENT CO													
163	1968 VOLK SEDZ 91	COLD TRANS	6.03	61.13	249.03	2.72	24.37	.13	.06	0.00		.27	.13
		COLD STAB	6.49	84.80	241.69	1.40	22.44	.18	.10	0.00		.40	.12
		HOT TRANS	4.78	54.34	234.23	2.21	26.51	.08	.05	0.00		.19	.10
IHC = 470 PPM HEXANE		HOT STAB	6.75	87.64	247.67	2.50	21.82	.19	.12	0.00		.43	.12
ICO = 6.50 PERCENT CO													
		1972 FTP	6.27	73.47	245.20	2.03	23.32	.16	.08	0.00		.34	.13
OTHER TESTS: NONE		1975 FTP	5.92	71.61	241.16	1.89	23.83	.14	.08	0.00		.32	.12
		HOT START	5.81	71.70	241.24	1.75	23.84	.14	.08	0.00		.32	.11
		HFET	1.61	25.35	176.70	1.59	40.04						

EMISSION RESULTS EXPRESSED IN GRAMS/MILE - FUEL ECONOMY IN MILES/GALLON

LISTING OF FEDERAL TEST PROCEDURE RESULTS
ON INDIVIDUAL VEHICLES

NEWARK, N.J.

VEHICLE NUMBER	YEAR MAKE MODEL CID	TEST TYPE	HC	CO	CO2	NOXC	FUEL ECONOMY	LIGHT HYDROCARBONS METHANE (CH4)	ETHANE (C2H6)	PROPANE (C3H8)	C2 UNSATURATES ETHYLENE (C2H4)	+ACETYLENE (C2H2)	ALIPHATIC ALDEHYDES (R-CHO)
164	1967 AMER REBE 232	COLD TRANS	4.69	54.76	366.94	5.08	18.97	.17	.12	0.00		.51	.16
		COLD STAB	4.01	71.86	343.91	3.65	18.90	.18	.08	0.00		.42	.16
		HOT TRANS	3.42	43.13	330.00	5.11	21.72	.13	.11	0.00		.41	.19
IHC = 370 PPM HEXANE		HOT STAB	3.92	86.63	341.51	4.67	18.11	.20	.08	0.00		.29	.17
ICO = 10.00 PERCENT CO													
		1972 FTP	4.33	63.68	354.93	4.34	18.93	.17	.10	0.00		.46	.16
OTHER TESTS: NEW JERSEY		1975 FTP	3.99	60.50	344.86	4.34	19.61	.16	.09	0.00		.43	.17
		HOT START	3.68	65.81	336.00	4.36	19.68	.16	.09	0.00		.35	.18
		HFET	1.80	17.67	277.70	4.81	28.52						
N.J. IHC = F PPM HEXANE													
N.J. ICO = F PERCENT CO													
165	1967 BUIC LESA 340	COLD TRANS	9.14	156.70	470.67	3.16	11.90	.35	.22	0.00		.48	.17
		COLD STAB	4.13	142.91	660.82	2.56	9.88	.38	.17	0.00		.47	.20
		HOT TRANS	6.25	119.49	420.58	2.78	14.13	.25	.15	0.00		.37	.15
IHC = 1200 PPM HEXANE		HOT STAB	7.46	135.65	437.95	2.91	13.15	.31	.16	0.00		.41	.22
ICO = 6.00 PERCENT CO													
		1972 FTP	6.53	149.51	569.80	2.85	10.75	.36	.20	0.00		.47	.19
OTHER TESTS: NONE		1975 FTP	5.74	139.36	556.14	2.75	11.19	.34	.18	0.00		.44	.18
		HOT START	6.88	127.91	429.64	2.08	13.60	.28	.16	0.00		.39	.19
		HFET	3.80	95.63	320.60	2.34	18.38						
166	1967 CADI DEVI 429	COLD TRANS	48.87	139.99	682.14	5.43	8.40	.42	.33	0.00		1.08	.63
		COLD STAB	45.83	199.50	536.42	2.51	8.92	.63	.27	0.00		1.24	.39
		HOT TRANS	43.44	129.68	613.29	5.21	9.29	.39	.34	0.00		.98	.53
IHC = 2000 PPM HEXANE		HOT STAB	43.76	203.08	460.46	4.98	9.66	.86	.39	0.00		1.65	.39
ICO = 10.00 PERCENT CO													
		1972 FTP	47.28	171.01	606.17	3.91	8.66	.53	.30	0.00		1.16	.50
OTHER TESTS: NONE		1975 FTP	45.80	168.20	587.39	3.85	8.90	.52	.30	0.00		1.13	.48
		HOT START	43.61	167.95	533.61	3.62	9.48	.64	.36	0.00		1.33	.45
		HFET	22.12	247.43	383.90	2.47	10.53						

EMISSION RESULTS EXPRESSED IN GRAMS/MILE - FUEL ECONOMY IN MILES/GALLON

LISTING OF FEDERAL TEST PROCEDURE RESULTS
ON INDIVIDUAL VEHICLES

NEWARK, N.J.

VEHICLE NUMBER	YEAR MAKE MODEL CID	TEST TYPE	HC	CO	CO2	NOXC	FUEL ECONOMY	METHANE (CH4)	ETHANE (C2H6)	PROPANE (C3H8)	C2 UNSATURATES ETHYLENE (C2H4)	C2 UNSATURATES ACETYLENE (C2H2)	ALIPHATIC ALDEHYDES (R-CHO)
								----------LIGHT HYDROCARBONS----------					
167	1967 CHEV BISC 250	COLD TRANS	9.54	126.40	382.06	1.88	14.53	.36	.28	0.00		.32	.14
		COLD STAB	9.94	128.80	391.51	1.26	14.19	.55	.42	0.00		.50	.21
		HOT TRANS	6.93	138.82	208.72	2.00	19.77	.28	.21	0.00		.28	.15
IHC = 480 PPM HEXANE		HOT STAB	8.91	128.58	383.79	1.73	14.45	.54	.41	0.00		.48	.17
ICO = 9.80 PERCENT CO													
		1972 FTP	9.75	127.65	386.99	1.56	14.35	.46	.36	0.00		.41	.17
OTHER TESTS: NONE		1975 FTP	9.04	131.64	339.69	1.59	15.46	.43	.34	0.00		.40	.18
		HOT START	7.96	133.48	299.99	1.56	16.59	.41	.32	0.00		.38	.16
		HFET	2.42	28.57	289.70	1.67	25.93						
168	1967 CHEV IMPA 283	COLD TRANS	9.45	110.19	483.76	3.21	12.92	.24	.18	0.00		.42	.24
		COLD STAB	8.30	95.74	435.50	2.50	14.50	.28	.18	0.00		.45	.42
		HOT TRANS	6.14	65.21	421.00	3.89	16.35	.17	.16	0.00		.34	.31
IHC = 600 PPM HEXANE		HOT STAB	7.63	79.42	435.42	2.95	15.19	.24	.15	0.00		.40	.42
ICO = 5.20 PERCENT CO													
		1972 FTP	8.85	102.66	458.60	2.84	13.70	.26	.18	0.00		.43	.33
OTHER TESTS: NONE		1975 FTP	7.94	90.39	441.48	3.03	14.58	.24	.18	0.00		.41	.35
		HOT START	6.92	72.62	428.52	3.18	15.72	.20	.16	0.00		.37	.36
		HFET	3.31	39.75	342.30	3.29	21.37						
169	1967 CHEV CHEL 283	COLD TRANS	10.61	113.81	449.64	3.28	13.40	.66	.85	0.00		1.09	.28
		COLD STAB	9.29	109.52	385.98	1.76	15.11	.67	.59	0.00		.91	.02
		HOT TRANS	7.24	78.40	354.90	1.25	17.71	.42	.49	0.00		.74	.48
IHC = 580 PPM HEXANE		HOT STAB	8.33	100.28	346.57	3.01	16.73	.54	.55	0.00		.76	.05
ICO = 8.00 PERCENT CO													
		1972 FTP	9.92	111.57	416.45	2.49	14.24	.67	.71	0.00		1.00	.14
OTHER TESTS: NEW JERSEY		1975 FTP	9.00	101.91	390.61	1.94	15.32	.60	.61	0.00		.90	.20
		HOT START	7.81	89.81	350.56	1.70	17.19	.48	.52	0.00		.75	.25
		HFET	4.98	56.18	295.60	3.06	22.21						

N.J. IHC = 4000 PPM HEXANE
N.J. ICO = 8.00P PERCENT CO

EMISSION RESULTS EXPRESSED IN GRAMS/MILE - FUEL ECONOMY IN MILES/GALLON

LISTING OF FEDERAL TEST PROCEDURE RESULTS
ON INDIVIDUAL VEHICLES

NEWARK, N.J.

VEHICLE NUMBER	YEAR MAKE MODEL CID	TEST TYPE	HC	CO	CO2	NOXC	FUEL ECONOMY	*----------LIGHT HYDROCARBONS----------* METHANE (CH4)	ETHANE (C2H6)	PROPANE (C3H8)	C2 UNSATURATES ETHYLENE (C2H4)	+ACETYLENE (C2H2)	ALIPHATIC ALDEHYDES (R-CHO)
170	1967 CHEV MALI 327	COLD TRANS	10.18	104.68	511.84	2.58	12.52	.27	.26	0.00		.46	.25
		COLD STAB	8.31	122.30	425.29	1.27	13.79	.45	.27	0.00		.53	.19
		HOT TRANS	7.69	68.42	389.22	2.66	17.03	.23	.23	0.00		.40	.22
IHC =	320 PPM HEXANE	HOT STAB	8.73	118.91	388.77	2.37	14.71	.43	.27	0.00		.52	.19
ICO =	5.20 PERCENT CO												
		1972 FTP	9.20	113.87	466.72	1.90	13.15	.36	.27	0.00		.50	.22
OTHER TESTS: NONE		1975 FTP	8.52	103.97	433.26	1.92	14.23	.35	.26	0.00		.48	.21
		HOT START	8.23	94.74	388.99	1.91	15.74	.34	.25	0.00		.46	.21
		HFET	3.32	33.63	342.30	.75	21.88						
171	1967 CHRY NEWP 383	COLD TRANS	16.91	301.19	412.42	1.40	9.45	.51	.04	0.00		.53	.28
		COLD STAB	7.06	103.49	478.36	2.99	13.38	.24	.20	0.00		.33	.27
		HOT TRANS	6.51	113.30	455.26	3.31	13.57	.21	.24	0.00		.32	.23
IHC =	230 PPM HEXANE	HOT STAB	6.48	90.26	481.07	1.28	13.79	.20	.19	0.00		.30	.27
ICO =	2.10 PERCENT CO												
		1972 FTP	11.77	198.12	446.80	2.23	11.16	.37	.12	0.00		.42	.27
OTHER TESTS: NONE		1975 FTP	8.94	146.86	458.49	2.75	12.37	.29	.18	0.00		.37	.26
		HOT START	6.49	101.29	468.72	3.32	13.69	.20	.21	0.00		.31	.25
		HFET	6.05	16.98	505.60	4.53	16.09						
172	1967 DODG DART 273	COLD TRANS	5.97	68.82	492.31	5.37	14.33	.14	.14	0.00		.44	.26
		COLD STAB	6.15	79.13	465.22	3.92	14.57	.13	.10	0.00		.39	.25
		HOT TRANS	4.62	51.12	426.49	5.01	17.02	.11	.11	0.00		.36	.23
IHC =	450 PPM HEXANE	HOT STAB	5.80	67.76	453.84	4.93	15.34	.12	.12	0.00		.37	.26
ICO =	3.20 PERCENT CO												
		1972 FTP	6.06	74.20	478.19	4.61	14.46	.14	.12	0.00		.41	.26
OTHER TESTS: NONE		1975 FTP	5.69	69.37	460.23	4.52	15.11	.13	.11	0.00		.39	.25
		HOT START	5.23	59.80	440.75	4.49	16.10	.11	.11	0.00		.36	.25
		HFET	2.55	34.88	338.20	3.61	22.13						

EMISSION RESULTS EXPRESSED IN GRAMS/MILE - FUEL ECONOMY IN MILES/GALLON

LISTING OF FEDERAL TEST PROCEDURE RESULTS
ON INDIVIDUAL VEHICLES

NEWARK, N.J.

VEHICLE NUMBER	YEAR MAKE MODEL CID	TEST TYPE	HC	CO	CO2	NOXC	FUEL ECONOMY	*----------LIGHT HYDROCARBONS----------* METHANE (CH4)	ETHANE (C2H6)	PROPANE (C3H8)	C2 UNSATURATES ETHYLENE (C2H4)	+ACETYLENE (C2H2)	ALIPHATIC ALDEHYDES (R-CHO)
173	1967 FORD GALA 289	COLD TRANS	8.01	162.23	523.79	4.00	11.04	.08	.32	0.00		.29	.15
		COLD STAB	4.37	53.52	556.70	4.55	13.56	.09	.69	0.00		.30	.23
		HOT TRANS	4.44	55.81	506.43	6.20	14.59	.07	.25	0.00		.31	.27
IHC = 350 PPM HEXANE		HOT STAB	4.17	41.63	537.06	3.68	14.31	.11	.51	0.00		.32	.28
ICO = .30 PERCENT CO													
		1972 FTP	6.11	105.55	540.95	4.29	12.22	.09	.51	0.00		.29	.19
OTHER TESTS: NONE		1975 FTP	5.14	76.52	536.21	4.89	13.19	.08	.49	0.00		.30	.22
		HOT START	4.30	49.98	522.40	5.27	14.44	.09	.38	0.00		.32	.27
		HFET	3.45	41.27	383.00	5.30	19.34						
174	1967 FORD GALA 289	COLD TRANS	6.62	69.35	316.04	4.20	19.90	.41	.27	0.00		.59	.39
		COLD STAB	5.41	56.06	424.78	3.70	16.74	.12	.13	0.00		.30	.41
		HOT TRANS	7.91	67.53	452.84	7.22	15.20	.14	.15	0.00		.33	.30
IHC = 2000 PPM HEXANE		HOT STAB	8.15	93.30	406.75	3.85	15.32	.11	.12	0.00		.29	.52
ICO = 6.40 PERCENT CO													
		1972 FTP	5.94	62.42	372.73	3.94	18.12	.26	.20	0.00		.44	.40
OTHER TESTS: NONE		1975 FTP	6.34	61.93	410.06	4.77	16.83	.18	.17	0.00		.37	.38
		HOT START	8.04	83.96	428.81	6.36	15.26	.13	.14	0.00		.31	.42
		HFET	5.23	27.28	354.90	5.51	21.42						
175	1967 FORD GALA 390	COLD TRANS	7.23	147.25	474.15	3.11	12.18	.36	.19	0.00		.84	.21
		COLD STAB	8.76	242.80	427.14	1.21	10.61	.40	.13	0.00		.74	.19
		HOT TRANS	6.33	141.57	425.18	2.53	13.29	.26	.13	0.00		.57	.18
IHC = 300 PPM HEXANE		HOT STAB	7.73	228.37	421.25	2.86	11.03	.31	.11	0.00		.59	.18
ICO = 6.50 PERCENT CO													
		1972 FTP	8.03	197.06	449.64	2.12	11.31	.38	.16	0.00		.79	.20
OTHER TESTS: NONE		1975 FTP	7.78	195.51	436.28	1.96	11.55	.36	.14	0.00		.71	.19
		HOT START	7.06	186.82	423.13	1.80	12.01	.29	.12	0.00		.58	.18
		HFET	4.87	107.86	313.30	2.06	17.81						

EMISSION RESULTS EXPRESSED IN GRAMS/MILE - FUEL ECONOMY IN MILES/GALLON

APPENDIX C

LISTING OF FEDERAL TEST PROCEDURE RESULTS
ON INDIVIDUAL VEHICLES

NEWARK, N.J.

VEHICLE NUMBER	YEAR MAKE MODEL CID	TEST TYPE	HC	CO	CO2	NOXC	FUEL ECONOMY	METHANE (CH4)	ETHANE (C2H6)	PROPANE (C3H8)	C2 UNSATURATES ETHYLENE+ACETYLENE (C2H4) (C2H2)	ALIPHATIC ALDEHYDES (R-CHO)
								----------LIGHT HYDROCARBONS----------				
176	1967 MERC MO-R 390	COLD TRANS	11.94	31.94	718.38	5.05	11.01	.08	.14	0.00	.43	.70
		COLD STAB	13.29	37.51	610.59	4.11	12.47	.07	.09	0.00	.30	.54
		HOT TRANS	8.50	19.63	549.97	6.30	14.63	.06	.08	0.00	.31	.57
IHC = 1250 PPM HEXANE		HOT STAB	12.59	36.86	548.80	4.63	12.93	.07	.09	0.00	.31	.55
ICO = 2.20 PERCENT CO												
		1972 FTP	12.65	34.84	662.19	4.56	11.72	.08	.11	0.00	.36	.62
OTHER TESTS: NONE		1975 FTP	11.71	31.32	616.24	4.90	12.63	.07	.10	0.00	.33	.58
		HOT START	10.63	28.32	570.21	5.35	13.69	.07	.09	0.00	.31	.56
		HFET	3.07	5.60	448.40	5.26	19.01					
177	1967 OLDS DELT 425	COLD TRANS	5.51	89.78	672.28	2.89	10.68	.14	.13	0.00	.49	.16
		COLD STAB	3.38	45.85	693.55	1.94	11.43	.10	.09	0.00	.36	.17
		HOT TRANS	2.93	22.86	628.50	3.03	13.17	.07	.09	0.00	.30	.18
IHC = 130 PPM HEXANE		HOT STAB	2.81	30.56	690.82	2.65	11.87	.08	.09	0.00	.30	.20
ICO = 1.10 PERCENT CO												
		1972 FTP	4.40	66.38	683.37	2.39	11.06	.12	.11	0.00	.42	.16
OTHER TESTS: NEW JERSEY		1975 FTP	3.69	48.62	671.43	2.43	11.69	.10	.10	0.00	.37	.17
		HOT START	2.87	25.88	660.99	2.42	12.46	.07	.09	0.00	.30	.19
		HFET	1.74	18.74	498.40	2.62	16.64					
N.J. IHC = 1600 PPM HEXANE												
N.J. ICO = 1.500 PERCENT CO												
178	1967 PLYM FRY3 225	COLD TRANS	8.50	146.32	526.52	6.74	11.33	.55	.27	0.00	.80	.26
		COLD STAB	3.10	17.85	551.10	7.10	15.07	.08	.13	0.00	.27	.32
		HOT TRANS	3.52	36.31	494.07	7.07	15.78	.11	.13	0.00	.29	.25
IHC = 370 PPM HEXANE		HOT STAB	4.42	25.52	488.75	6.19	16.35	.09	.14	0.00	.28	.27
ICO = .20 PERCENT CO												
		1972 FTP	5.69	79.34	539.33	6.93	13.01	.31	.19	0.00	.53	.29
OTHER TESTS: NONE		1975 FTP	4.33	49.33	530.48	7.02	14.28	.18	.16	0.00	.39	.29
		HOT START	3.99	30.68	491.29	6.29	16.07	.10	.14	0.00	.28	.26
		HFET	1.83	17.60	360.40	5.29	22.57					

EMISSION RESULTS EXPRESSED IN GRAMS/MILE - FUEL ECONOMY IN MILES/GALLON

LISTING OF FEDERAL TEST PROCEDURE RESULTS
ON INDIVIDUAL VEHICLES

NEWARK, N.J.

VEHICLE NUMBER	YEAR MAKE MODEL CID	TEST TYPE	HC	CO	CO2	NOXC	FUEL ECONOMY	LIGHT HYDROCARBONS METHANE (CH4)	ETHANE (C2H6)	PROPANE (C3H8)	C2 UNSATURATES ETHYLENE (C2H4)	+ACETYLENE (C2H2)	ALIPHATIC ALDEHYDES (R-CHO)
179	1967 PONT TEMP 326	COLD TRANS	6.91	59.33	529.64	5.99	13.76	.23	.18	0.00		.59	.36
		COLD STAB	4.53	81.89	446.32	4.07	15.06	.26	.14	0.00		.55	.21
		HOT TRANS	3.53	42.80	438.47	6.48	17.17	.16	.12	0.00		.44	.25
IHC = 500 PPM HEXANE		HOT STAB	4.36	79.11	429.54	5.50	15.68	.25	.14	0.00		.55	.23
ICO = 6.90 PERCENT CO													
		1972 FTP	5.67	71.69	486.20	4.99	14.41	.25	.15	0.00		.57	.29
OTHER TESTS: NEW JERSEY		1975 FTP	4.75	66.58	461.33	5.12	15.28	.23	.14	0.00		.53	.25
		HOT START	3.96	61.21	433.81	5.28	16.36	.21	.13	0.00		.50	.24
		HFET	1.44	10.67	370.40	6.33	22.71						
N.J. IHC =	P PPM HEXANE												
N.J. ICO =	P PERCENT CO												
180	1967 VOLK SED2 91	COLD TRANS	9.31	83.69	228.64	2.10	22.83	.17	.14	0.00		.20	.12
		COLD STAB	5.93	78.42	265.04	1.46	21.80	.18	.15	0.00		.23	.10
		HOT TRANS	4.76	59.98	230.39	1.89	26.12	.11	.12	0.00		.16	.11
IHC = 325 PPM HEXANE		HOT STAB	5.29	76.28	257.50	1.93	22.51	.17	.14	0.00		.21	.09
ICO = 8.60 PERCENT CO													
		1972 FTP	7.55	80.66	247.61	1.77	22.28	.18	.15	0.00		.22	.11
OTHER TESTS: NEW JERSEY		1975 FTP	6.31	74.35	248.09	1.71	23.06	.16	.14	0.00		.20	.11
		HOT START	5.04	68.48	244.57	1.59	24.11	.14	.13	0.00		.19	.10
		HFET	1.73	27.76	181.40	1.72	38.50						
N.J. IHC =	F PPM HEXANE												
N.J. ICO =	F PERCENT CO												

APPENDIX D

MODE NUMBER DEFINITIONS

MODE NUMBER	FROM-TO (MPH)	DISTANCE (MILES)	MODE NUMBER	FROM-TO (MPH)	DISTANCE (MILES)
1	00-30	.0602	22	60-00	.2634
2	30-00	.0741	23	00-30	.0737
3	00-15	.0201	24	30-60	.3134
4	15-30	.0705	25	60-30	.2362
5	30-45	.1360	26	30-00	.0444
6	45-30	.1268	27	00-60	.4009
7	30-60	.2163	28	60-00	.3293
8	60-45	.1716	29	00-30	.0886
9	45-60	.2043	30	30-60	.2599
10	60-15	.3367	31	60-30	.1813
11	15-60	.3136	32	30-00	.0592
12	60-00	.1973			
13	00-60	.3313			
14	60-30	.2994			
15	30-15	.0579	33	Idle	
16	15-00	.0173	34	5 mph Steady State	
17	00-45	.1759	35	10 mph Steady State	
18	45-15	.1392	36	15 mph Steady State	
19	15-45	.1528	37	30 mph Steady State	
20	45-00	.1304	38	45 mph Steady State	
21	00-60	.2654	39	60 mph Steady State	

Results in grams/mile or grams/minute for zero mph

LISTING OF MODAL RESULTS ON INDIVIDUAL VEHICLES

NEWARK, N.J.

	VEH	YEAR	MAKE	MODL	CID	VEH	YEAR	MAKE	MODL	CID
	1	74	BUIC	REGA	350	2	74	CHEV	CHEL	350
MODE NO.	HC	CO	CO2	NOXC	MPG	HC	CO	CO2	NOXC	MPG
1	2.22	35.82	1371.70	1.09	6.18	2.59	22.16	1260.80	1.76	6.81
2	1.31	11.13	594.50	2.48	14.43	2.87	22.54	526.60	.73	15.54
3	3.31	37.21	1245.20	1.86	6.75	3.46	25.47	1273.30	1.19	6.70
4	1.59	98.84	924.50	.48	8.18	1.49	16.07	960.20	1.45	8.96
5	1.09	10.34	877.50	.62	9.89	1.12	18.49	845.30	.82	10.11
6	.77	4.89	370.20	2.05	23.34	4.09	10.42	322.20	.66	25.25
7	2.22	77.14	933.80	.97	8.36	2.57	97.36	867.00	1.13	8.63
8	1.09	5.84	388.10	3.47	22.15	.91	21.02	366.10	1.22	22.08
9	.71	22.57	892.80	1.25	9.54	1.24	17.41	661.80	1.64	12.81
10	.74	3.51	357.90	2.40	24.27	3.98	16.27	301.90	.82	26.10
11	.88	49.64	1113.10	2.76	7.43	2.96	147.59	884.40	1.05	7.88
12	.75	3.36	397.70	3.38	21.90	5.14	17.98	354.70	1.09	22.23
13	.74	29.94	1268.00	3.46	6.74	2.64	108.87	1017.60	2.07	7.41
14	.41	1.99	352.10	2.32	24.89	3.48	16.45	275.00	.79	28.46
15	.70	5.58	394.50	.65	21.89	2.03	10.64	468.30	.44	18.06
16	4.80	22.40	1226.70	8.25	6.95	3.42	26.49	1014.90	1.50	8.32
17	.98	12.51	1204.60	2.74	7.23	2.16	44.11	1039.40	2.16	7.96
18	.57	2.93	392.10	1.65	22.27	3.54	10.11	321.00	1.03	25.50
19	1.27	10.58	1050.40	1.67	8.29	2.14	71.59	1009.60	1.36	7.86
20	1.20	4.02	460.50	2.23	18.86	4.77	27.57	423.20	.80	18.43
21	.91	50.53	1264.80	1.73	6.59	2.80	138.66	1134.70	1.71	6.52
22	1.50	2.71	339.20	1.87	25.49	5.51	18.04	353.20	.85	22.24
23	1.70	10.90	1234.20	1.57	7.06	2.73	35.47	1186.50	2.02	7.10
24	.66	12.36	880.70	1.41	9.84	1.30	30.00	804.60	1.70	10.37
25	1.33	2.98	295.60	1.86	29.15	3.27	10.54	276.90	1.04	29.21
26	1.31	5.33	744.70	2.95	11.72	2.51	15.62	632.20	.57	13.35
27	.63	7.87	1004.60	3.11	8.71	1.43	20.51	894.80	2.64	9.53
28	1.13	2.57	374.80	1.65	23.21	3.69	9.79	264.70	.79	30.42
29	1.79	9.59	1007.70	1.28	8.63	2.03	18.40	1155.80	.60	7.45
30	.82	22.69	852.10	1.85	9.97	1.72	77.61	879.20	1.21	8.82
31	1.75	3.48	306.70	2.48	27.93	2.55	19.12	319.80	1.51	24.80
32	1.07	5.26	702.00	4.30	12.44	2.52	20.38	520.20	.43	15.84
BAG (ACT.)	1.07	21.59	798.30	3.23	10.62	2.86	47.69	723.00	1.75	11.00
BAG (CALC.)	1.11	14.93	799.90	2.71	10.73	2.27	34.38	765.80	1.44	10.73
33	.23	3.77	137.90	.21	61.40	.38	.88	116.40	.16	74.59
34	2.82	31.63	1506.40	2.49	5.33	3.90	9.73	1409.40	1.28	6.18
35	.61	9.94	937.90	1.08	9.29	1.80	6.92	749.30	.69	11.59
36	.47	6.89	544.10	.82	13.52	.95	14.08	675.00	.62	12.68
37	1.17	3.35	463.60	.46	18.78	.72	12.63	518.50	.37	16.42
38	.70	4.17	453.60	1.24	19.20	.47	3.71	523.00	.88	16.74
39	.45	3.85	499.00	4.92	17.52	.29	4.46	549.10	1.52	15.93

RESULTS EXPRESSED IN GRAMS/MILE - GRAMS/MINUTE FOR ZERO MPH

LISTING OF MODAL RESULTS ON INDIVIDUAL VEHICLES

NEWARK, N.J.

	VEH	YEAR	MAKE	MODL	CID	VEH	YEAR	MAKE	MODL	CID
	3	74	CHEV	NOVA	350	4	74	DODG	DART	198
MODE NO.	HC	CO	CO2	NOXC	MPG	HC	CO	CO2	NOXC	MPG
1	3.94	38.35	998.80	5.05	8.28	3.40	50.77	759.80	.51	10.44
2	1.93	13.26	696.10	1.67	12.27	1.78	13.29	235.90	.98	33.82
3	4.05	35.74	1248.50	3.51	6.74	2.92	27.11	798.90	1.43	10.43
4	2.01	18.24	830.80	1.94	10.25	2.21	19.04	576.80	.48	14.46
5	1.60	8.95	702.70	2.25	12.30	2.16	18.51	488.30	2.31	16.93
6	2.77	3.68	327.60	1.18	25.94	.99	1.05	157.80	2.76	54.59
7	4.21	128.00	773.10	3.60	8.99	2.96	66.34	602.00	1.47	12.40
8	2.76	4.99	415.70	2.24	20.53	.92	3.03	149.20	1.61	56.57
9	2.23	20.19	721.10	5.91	11.68	1.88	19.81	527.90	.71	15.71
10	5.83	1.95	284.60	1.32	28.99	2.19	9.99	243.50	.98	33.35
11	3.61	21.47	300.70	6.57	25.66	3.12	78.54	590.10	3.31	12.27
12	7.65	3.71	364.00	1.41	22.52	2.79	8.03	164.40	2.01	47.75
13	3.59	52.10	885.20	6.59	9.07	2.79	53.55	624.00	4.00	12.38
14	4.72	3.91	307.50	1.18	27.01	2.13	3.33	141.30	1.54	57.90
15	1.97	4.19	186.60	.88	44.50	1.39	8.06	138.10	1.36	57.20
16	2.29	20.65	961.80	.75	8.86	3.17	21.59	431.50	2.46	18.67
17	3.12	14.35	862.00	4.90	9.92	3.07	33.75	178.40	2.11	36.80
18	3.76	4.16	310.00	.77	27.02	1.81	3.25	135.50	2.43	60.65
19	2.23	15.83	828.10	5.18	10.32	2.57	34.31	564.60	.70	14.16
20	5.40	3.45	336.20	.85	24.74	2.29	5.08	179.90	2.19	45.48
21	5.16	145.50	869.20	4.14	7.97	5.00	135.00	736.80	2.13	9.20
22	4.93	3.38	341.60	1.15	24.48	2.89	6.43	193.40	1.58	41.73
23	4.23	44.19	941.30	1.63	8.67	4.09	49.54	849.30	.40	9.44
24	1.92	24.04	735.30	3.98	11.39	2.69	46.60	578.00	2.71	13.45
25	4.04	3.34	291.90	1.25	28.63	1.85	2.36	144.80	2.44	57.49
26	3.69	10.58	526.70	1.10	16.05	1.78	10.52	308.30	1.75	26.86
27	2.37	27.37	798.40	5.29	10.45	2.72	34.83	593.60	4.48	13.51
28	4.36	4.67	364.00	1.60	23.05	2.65	4.36	158.60	1.37	51.05
29	3.60	22.04	939.70	3.01	9.02	3.97	23.44	769.60	.80	10.84
30	3.06	64.15	782.70	4.68	9.94	3.27	71.79	567.10	1.82	12.86
31	8.42	5.40	291.10	1.64	27.20	1.81	4.83	179.90	3.29	45.93
32	2.98	9.34	503.60	.87	16.82	2.06	3.50	256.40	1.29	33.06
BAG (ACT.)	3.68	28.19	575.70	3.46	12.13	2.77	34.76	468.70	4.05	16.68
BAG (CALC.)	3.13	22.06	561.50	2.77	12.57	2.52	25.56	441.00	2.64	18.14
33	.40	.62	93.70	.15	92.51	.31	4.18	42.90	.07	175.92
34	3.69	4.10	1089.90	.64	8.01	3.81	51.32	552.50	.22	13.76
35	1.33	12.61	862.70	.81	10.01	2.32	34.05	472.30	.50	16.65
36	.95	8.81	573.60	.59	15.03	1.93	24.34	332.30	.57	23.56
37	.77	9.26	476.50	.43	18.21	1.47	10.41	256.20	2.95	32.02
38	.81	4.39	468.80	1.11	18.56	1.08	.90	282.30	2.08	30.91
39	.52	3.86	461.60	2.23	18.91	1.10	1.32	322.00	3.02	27.10

RESULTS EXPRESSED IN GRAMS/MILE - GRAMS/MINUTE FOR ZERO MPH

LISTING OF MODAL RESULTS ON INDIVIDUAL VEHICLES

NEWARK, N.J.

	VEH	YEAR	MAKE	MODL	CID	VEH	YEAR	MAKE	MODL	CID
	5	74	FORD	MAVE	250	6	74	FORD	STAW	400
MODE NO.	HC	CO	CO2	NOXC	MPG	HC	CO	CO2	NOXC	MPG
1	3.82	36.03	1026.10	4.81	8.11	2.31	34.50	937.10	4.14	8.89
2	.96	.94	405.30	.78	21.66	.96	.83	309.40	.76	28.29
3	3.09	22.57	1496.40	3.43	5.76	2.45	12.10	903.10	2.79	9.54
4	1.84	14.41	705.90	2.22	12.09	1.42	17.59	643.60	3.21	13.13
5	2.03	9.92	590.10	3.73	14.50	1.01	4.58	450.40	3.42	19.26
6	.72	1.97	232.30	.82	37.34	.96	.59	172.10	1.95	50.41
7	3.14	68.10	783.90	5.68	9.85	2.11	60.15	565.60	4.26	13.31
8	1.63	5.15	209.50	1.44	39.84	.94	2.19	501.40	1.08	17.48
9	2.01	11.17	630.00	4.83	13.57	1.08	3.02	449.30	5.31	19.40
10	1.07	7.34	241.70	1.05	34.58	1.66	1.37	187.00	1.14	45.65
11	2.11	40.96	737.70	5.70	10.97	2.45	62.50	546.60	4.40	13.60
12	1.31	1.86	468.40	.87	18.67	2.38	3.88	220.20	1.32	37.95
13	2.99	28.01	768.00	6.08	10.80	1.72	17.08	616.10	7.75	13.69
14	1.55	5.26	208.70	1.20	40.00	1.83	1.64	183.30	1.75	46.30
15	.57	10.54	349.60	.64	24.12	.58	4.86	256.70	.78	33.34
16	2.41	14.96	854.40	2.24	10.02	1.82	4.11	671.20	3.24	12.99
17	3.01	12.90	741.50	6.59	11.51	1.65	17.74	648.00	4.87	13.03
18	.96	5.66	274.50	.76	30.99	.84	.97	216.30	3.17	40.25
19	2.74	18.67	761.50	5.33	11.10	1.63	23.63	616.30	3.52	13.48
20	1.37	7.30	310.50	.94	27.20	1.16	.33	252.80	3.56	34.54
21	.25	61.79	858.20	6.32	9.28	2.74	84.54	660.00	5.03	11.07
22	1.54	5.98	274.50	.78	30.73	1.53	1.45	137.30	1.48	61.45
23	3.38	21.67	916.90	4.82	9.23	5.34	18.42	778.80	2.71	10.76
24	2.32	18.68	628.80	5.37	13.34	1.13	6.95	498.10	6.27	17.31
25	1.66	4.58	207.30	.91	40.39	2.22	3.03	171.30	1.15	48.47
26	1.12	6.78	488.40	2.34	17.66	.58	8.20	374.10	4.46	22.83
27	2.70	11.59	677.00	7.25	12.61	1.13	6.00	583.50	6.18	14.88
28	1.74	5.26	265.90	1.07	31.73	1.76	3.13	199.30	1.00	42.30
29	2.76	18.03	788.50	3.93	10.75	1.25	6.97	767.80	4.16	11.34
30	2.64	37.88	659.10	5.47	12.21	1.58	15.26	561.60	6.02	15.03
31	1.88	5.81	202.80	1.08	40.73	1.39	2.26	149.40	2.46	56.40
32	1.15	8.35	493.80	1.23	17.38	.86	1.05	316.70	.91	27.64
BAG (ACT.)	2.17	17.49	542.60	3.52	15.38	2.72	22.96	796.40	3.63	10.55
BAG (CALC.)	2.13	16.89	571.80	3.70	14.67	1.92	12.24	576.70	3.68	14.74
33	.25	.27	93.40	.18	93.80	.39	.31	129.10	.13	67.84
34	2.49	3.97	1195.50	11.50	7.34	4.25	5.64	1562.20	1.33	5.60
35	1.17	2.11	598.80	.68	14.65	2.21	2.02	862.50	.67	10.17
36	.75	2.02	429.70	.48	20.39	1.41	2.43	591.50	.64	14.80
37	.75	3.76	334.50	1.67	25.89	1.32	2.13	437.30	1.81	19.95
38	1.38	8.24	362.20	1.65	23.44	1.13	2.88	469.10	4.31	18.60
39	1.87	11.15	372.20	3.25	22.43	1.39	3.12	530.60	2.34	16.44

RESULTS EXPRESSED IN GRAMS/MILE - GRAMS/MINUTE FOR ZERO MPH

LISTING OF MODAL RESULTS ON INDIVIDUAL VEHICLES

NEWARK, N.J.

	VEH	YEAR	MAKE	MODL	CID	VEH	YEAR	MAKE	MODL	CID
	7	74	OLDS	CUTL	350	8	74	PLYM	FRY3	360
MODE NO.	HC	CO	CO2	NOXC	MPG	HC	CO	CO2	NOXC	MPG
1	3.95	27.51	1269.30	6.58	6.70	4.95	25.72	1382.40	5.84	6.17
2	1.30	9.49	1175.50	.69	7.43	2.91	98.93	421.30	.82	15.15
3	3.77	16.09	1515.90	3.43	5.71	6.93	156.03	1315.80	8.71	5.61
4	1.64	14.75	1129.00	2.91	7.67	3.19	60.41	795.30	4.84	9.86
5	1.72	12.59	758.80	4.09	11.32	2.66	25.43	664.30	4.25	12.45
6	1.48	2.35	327.90	1.00	26.39	1.81	27.72	286.90	2.21	26.40
7	4.75	102.30	833.20	5.89	8.80	3.67	46.81	847.10	6.26	9.52
8	2.38	3.99	340.50	1.31	25.05	1.83	15.17	308.70	1.22	26.23
9	2.01	6.61	717.80	5.55	12.08	2.65	20.84	804.20	5.00	10.50
10	4.43	2.85	307.80	.87	27.20	1.76	34.11	266.60	.70	27.24
11	3.35	36.33	997.50	8.57	8.33	3.76	64.75	955.80	4.83	8.30
12	4.81	2.86	349.70	.98	24.02	2.26	35.87	322.30	1.18	23.00
13	3.13	29.18	1032.30	8.23	8.16	3.53	39.39	999.10	5.15	8.28
14	4.26	3.60	272.80	.82	30.40	1.76	25.12	251.20	1.22	29.96
15	1.64	6.75	444.40	1.12	19.29	2.20	53.29	375.90	.44	19.02
16	4.34	8.04	1241.20	.80	7.00	5.50	203.29	1090.30	1.81	6.22
17	2.49	10.44	1171.70	6.77	7.42	3.70	38.22	1039.40	4.31	7.99
18	3.18	4.69	298.90	.85	28.06	1.86	38.54	298.40	1.82	24.33
19	3.14	31.29	1043.40	6.39	8.05	3.70	43.08	996.20	4.87	8.25
20	4.03	2.85	400.00	.75	21.27	2.25	57.27	394.20	2.28	18.06
21	4.46	99.20	1033.50	5.96	7.37	4.96	114.88	1029.90	4.71	7.24
22	4.67	3.39	318.50	1.07	26.21	2.12	43.21	302.00	1.29	23.57
23	3.10	13.08	1411.60	4.48	6.16	7.66	58.45	1227.70	4.35	6.60
24	2.42	12.82	861.60	5.96	9.98	2.89	22.36	766.30	4.79	10.95
25	3.63	3.11	267.00	1.17	31.32	1.82	26.27	244.20	1.21	30.47
26	2.64	6.29	664.80	1.94	12.99	2.74	75.57	378.40	1.23	17.55
27	1.86	8.56	940.60	5.19	9.25	3.03	29.37	892.90	3.98	9.36
28	3.13	4.17	315.40	.76	26.74	2.02	44.20	287.50	1.01	24.43
29	2.64	11.97	1159.20	3.02	7.48	3.67	61.36	1091.30	4.95	7.40
30	3.08	19.37	897.90	6.71	9.46	3.40	31.76	842.20	6.15	9.83
31	3.34	3.29	263.70	.98	31.76	1.82	25.99	238.80	1.24	31.10
32	2.16	7.11	492.90	1.21	17.37	2.98	84.39	440.30	1.53	15.24
BAG (ACT.)	2.95	16.84	723.30	3.69	11.69	2.77	49.99	682.20	3.31	11.53
BAG (CALC.)	2.81	14.88	737.40	3.67	11.53	3.01	45.75	682.30	3.69	11.62
33	.30	.86	106.20	.10	81.80	.79	31.72	108.20	.06	55.28
34	2.98	12.27	1329.20	.93	6.54	9.12	361.66	1294.20	.51	4.69
35	1.86	9.00	975.80	1.48	8.91	4.61	179.67	652.10	.27	9.35
36	1.08	5.16	614.30	.71	14.19	2.95	110.77	508.40	.29	12.83
37	1.17	3.03	421.00	1.46	23.67	2.22	40.45	389.70	2.00	19.28
38	1.54	2.86	446.60	1.60	19.53	1.63	4.12	408.90	5.42	21.10
39	.98	3.51	464.30	2.64	18.77	1.22	2.17	429.30	3.00	20.33

RESULTS EXPRESSED IN GRAMS/MILE - GRAMS/MINUTE FOR ZERO MPH

LISTING OF MODAL RESULTS ON INDIVIDUAL VEHICLES

NEWARK, N.J.

	VEH	YEAR	MAKE	MODL	CID	VEH	YEAR	MAKE	MODL	CID
	9	74	PONT	BONN	400	10	74	VOLK	SEDA	97
MODE NO.	HC	CO	CO2	NOXC	MPG	HC	CO	CO2	NOXC	MPG
1	2.36	19.93	1041.10	6.61	8.22	4.81	54.73	497.30	3.91	14.83
2	2.05	12.69	564.90	1.58	15.01	3.52	13.43	287.20	1.33	27.78
3	3.19	42.55	1298.90	2.73	6.45	3.75	42.57	476.50	4.02	15.98
4	1.70	14.35	725.30	4.15	11.78	2.76	16.92	487.50	3.76	16.98
5	1.53	4.44	564.60	4.13	15.40	1.82	10.81	380.90	3.64	21.99
6	1.95	8.15	381.70	.98	22.15	1.19	4.49	183.10	.80	45.77
7	1.82	12.45	940.90	5.94	9.19	3.86	11.11	364.60	5.34	22.51
8	1.89	.29	445.20	1.92	19.65	1.47	9.73	188.60	1.06	42.56
9	1.47	7.62	709.80	4.81	12.22	1.18	1.49	329.90	4.59	26.42
10	2.32	10.23	405.00	1.46	20.72	2.52	8.37	114.80	.99	65.29
11	1.69	10.29	866.20	6.11	10.00	3.99	30.81	342.20	4.51	22.01
12	3.63	13.20	534.80	1.93	15.65	3.59	9.21	131.30	1.09	56.47
13	1.77	15.78	979.40	6.03	8.79	6.18	38.87	378.40	4.95	19.33
14	2.81	8.35	392.10	1.11	21.43	2.03	7.17	120.40	1.10	64.27
15	1.51	5.45	586.00	4.25	14.81	1.19	8.95	144.30	.33	54.74
16	3.07	2.71	1623.80	3.10	5.42	2.17	43.61	267.20	1.73	25.91
17	1.80	4.74	954.80	6.15	9.17	6.17	41.80	367.20	4.03	19.62
18	2.03	13.61	442.30	1.18	18.88	6.69	8.00	136.90	.70	52.00
19	1.71	8.99	771.90	4.94	11.21	1.83	19.43	359.20	4.52	22.44
20	2.86	14.57	489.20	.82	17.03	3.42	8.43	143.40	.93	52.99
21	2.15	19.33	965.50	6.17	8.85	7.69	40.41	403.90	5.61	18.05
22	2.87	13.22	443.90	1.43	18.73	2.80	10.82	138.00	.77	54.16
23	2.44	30.51	902.10	5.31	9.27	4.17	36.51	439.40	3.60	17.40
24	1.59	7.12	731.80	4.86	11.87	2.11	14.28	357.00	4.56	22.99
25	2.89	6.74	385.10	1.32	21.92	2.19	7.50	103.70	.76	72.49
26	2.80	6.14	889.50	6.66	9.77	2.47	9.89	212.00	.46	37.71
27	1.44	7.90	858.20	4.84	10.14	4.54	18.01	362.20	5.12	21.92
28	2.58	11.21	430.90	.76	19.43	1.69	9.25	131.60	.63	58.59
29	2.26	19.07	939.80	3.17	9.08	3.86	32.20	491.80	3.46	16.00
30	1.76	7.46	834.90	4.96	10.41	3.64	12.62	407.00	6.32	20.25
31	2.82	9.08	319.30	1.46	25.91	2.49	5.53	114.00	.70	67.96
32	2.38	12.41	992.50	2.16	8.71	2.50	18.20	150.80	.27	47.38
BAG (ACT.)	2.39	13.94	792.00	3.96	10.80	3.22	20.33	328.70	3.09	23.93
BAG (CALC.)	2.16	11.97	729.00	3.64	11.76	2.78	14.07	346.00	3.00	23.55
33	.66	10.99	126.90	.11	60.68	.40	5.80	31.60	.01	211.41
34	7.66	90.70	1547.90	1.41	5.18	5.16	21.23	566.30	.33	14.41
35	1.52	10.65	1099.10	1.34	7.92	1.66	10.04	502.50	.84	16.95
36	.92	5.48	761.20	1.09	11.49	.67	3.30	611.90	1.91	14.33
37	1.08	2.84	476.60	1.92	18.32	.62	2.48	370.30	1.45	23.59
38	.72	1.97	310.10	1.25	28.13	.55	1.86	268.60	1.41	32.48
39	1.15	6.12	461.00	2.89	18.71	.68	1.91	228.60	2.24	37.97

RESULTS EXPRESSED IN GRAMS/MILE - GRAMS/MINUTE FOR ZERO MPH

LISTING OF MODAL RESULTS ON INDIVIDUAL VEHICLES

NEWARK, N.J.

	VEH	YEAR	MAKE	MODL	CID	VEH	YEAR	MAKE	MODL	CID
	11	73	AMER	MATA	360	12	73	BUIC	CNTY	350
MODE NO.	HC	CO	CO2	NOXC	MPG	HC	CO	CO2	NOXC	MPG
1	4.60	47.44	883.20	6.21	9.13	4.25	47.00	1059.50	5.72	7.74
2	1.34	5.29	545.90	.48	15.89	2.17	13.63	445.10	.81	18.75
3	4.36	114.07	727.90	.90	9.64	5.31	82.93	1019.90	3.48	7.60
4	2.86	4.11	635.40	4.23	13.64	2.36	23.69	694.20	2.92	12.01
5	1.51	3.31	594.20	4.27	14.69	2.03	5.56	622.20	4.97	13.92
6	1.92	.57	345.20	1.37	25.20	1.79	6.82	389.90	1.26	21.84
7	2.00	6.60	812.80	8.15	10.70	2.62	9.69	808.80	9.66	10.66
8	1.08	2.08	390.00	2.49	22.37	1.71	4.93	425.50	2.91	20.23
9	1.28	3.13	679.50	6.10	12.89	1.81	4.07	669.70	6.66	13.02
10	3.08	3.11	342.40	1.47	24.86	2.61	4.33	337.30	1.71	25.19
11	2.18	7.91	916.50	10.55	9.48	2.13	10.80	909.40	9.72	9.51
12	3.63	6.57	418.30	1.69	20.17	4.73	4.75	391.50	2.28	21.44
13	2.30	12.22	877.50	10.63	9.82	2.49	12.09	894.90	8.67	9.63
14	2.53	2.22	300.60	1.81	28.44	2.97	3.20	315.30	1.65	26.92
15	1.02	2.38	426.10	.28	20.49	2.18	12.50	552.50	.93	15.33
16	3.85	4.36	1735.80	4.71	5.06	5.81	54.69	1272.50	1.51	6.45
17	2.96	18.53	814.80	9.51	10.40	2.88	19.29	884.20	7.05	9.61
18	2.06	1.07	358.20	.57	24.22	3.37	6.08	339.90	.95	24.64
19	2.75	3.40	764.80	8.20	11.40	2.63	3.94	842.00	5.83	10.36
20	2.48	4.21	438.90	2.52	19.58	3.36	6.02	382.20	.94	22.06
21	3.67	32.31	906.00	10.64	9.16	2.79	17.95	1007.60	10.46	8.50
22	3.67	1.74	400.20	1.68	21.41	4.06	4.43	339.20	1.55	24.72
23	4.10	19.37	874.10	7.05	9.67	3.76	36.69	878.20	5.28	9.36
24	1.59	4.23	700.90	6.70	12.46	1.88	4.29	730.80	6.96	11.94
25	2.83	2.56	304.70	1.52	27.94	3.08	4.74	356.90	2.28	23.72
26	1.91	5.94	693.10	1.07	12.53	3.07	10.79	703.50	2.49	12.15
27	2.66	10.37	768.40	8.96	11.19	2.17	10.89	831.50	8.06	10.37
28	3.12	5.33	366.80	1.22	23.05	3.84	4.66	347.60	1.63	24.18
29	3.47	23.17	867.90	5.96	9.70	3.60	36.53	809.20	4.48	10.11
30	1.75	4.50	765.10	7.86	11.41	2.02	6.82	805.80	8.02	10.79
31	3.11	1.29	327.00	3.11	26.19	3.54	3.60	346.30	1.99	24.44
32	1.55	1.00	532.70	.59	16.46	2.72	8.46	476.90	1.13	17.79
BAG (ACT.)	2.39	10.62	667.00	5.76	12.84	2.57	14.21	707.20	5.47	12.03
BAG (CALC.)	2.17	12.47	681.00	5.17	12.55	3.09	13.20	712.70	4.44	11.94
33	.75	22.51	77.40	.02	77.08	.58	12.47	83.50	.05	84.58
34	5.21	172.80	1076.80	.26	6.50					
35	2.34	74.25	585.40	.16	12.51					
36	1.56	21.57	463.80	.26	17.66	2.30	40.44	592.60	.26	13.38
37	.93	2.70	411.70	.92	21.19	2.73	6.72	367.70	.47	22.94
38	.24	3.42	444.80	2.33	19.68	2.39	4.79	389.30	1.04	21.95
39	.18	4.17	508.80	4.71	17.20	1.49	5.67	606.00	3.10	14.32

RESULTS EXPRESSED IN GRAMS/MILE - GRAMS/MINUTE FOR ZERO MPH

LISTING OF MODAL RESULTS ON INDIVIDUAL VEHICLES

NEWARK, N.J.

MODE NO.	VEH 13 HC	YEAR 73 CO	MAKE BUIC CO2	MODL ELEC NOXC	CID 455 MPG	VEH 14 HC	YEAR 73 CO	MAKE CADI CO2	MODL FLEE NOXC	CID 472 MPG
1	4.24	23.26	1263.90	6.92	6.76	5.87	53.75	1485.20	5.06	5.59
2	1.92	17.22	733.20	.59	11.58	5.01	33.47	587.30	1.48	13.53
3	6.45	46.31	1328.40	7.33	6.24	9.74	124.29	1475.40	4.37	5.22
4	2.95	25.03	884.30	4.55	9.51	3.86	20.24	895.70	2.97	9.44
5	2.35	8.63	776.80	5.47	11.12	2.20	10.43	791.50	3.51	10.89
6	3.72	3.70	363.80	.79	23.27	2.98	1.12	303.80	1.84	28.17
7	2.89	14.35	1305.50	11.47	8.56	3.51	45.36	1067.40	11.45	7.72
8	5.68	4.44	322.10	.57	25.57	2.27	12.73	373.20	2.01	22.17
9	2.12	6.04	844.60	8.22	10.31	2.08	15.42	876.80	4.52	9.78
10	4.32	4.00	377.40	.73	22.33	4.84	3.32	346.60	1.85	24.17
11	2.99	21.46	1143.40	12.28	7.48	3.96	42.01	1150.30	8.81	7.22
12	5.05	4.16	431.60	1.00	19.54	5.73	6.58	375.40	2.70	21.97
13	2.61	11.09	1160.30	11.34	7.48	3.77	32.21	1210.20	8.88	6.97
14	4.61	3.45	340.90	.76	24.59	4.82	3.58	300.00	1.79	27.66
15	1.95	8.78	530.50	.98	16.12	3.08	17.72	474.40	1.67	17.33
16	6.86	70.77	1769.90	2.37	4.66	7.63	116.97	1672.40	.41	4.72
17	3.36	22.15	1189.30	8.93	7.19	3.47	18.25	1614.00	8.25	5.37
18	2.94	5.32	448.30	.88	19.05	3.27	4.69	352.70	.73	23.96
19	3.03	12.75	1102.40	8.05	7.84	3.51	12.55	1179.20	6.22	7.33
20	3.53	7.08	526.60	.92	16.17	4.50	5.17	446.00	1.76	18.95
21	3.33	29.15	1285.10	13.26	6.62	4.76	67.05	1256.90	8.92	6.44
22	4.79	4.40	436.50	1.14	19.35	5.80	3.86	373.80	1.61	22.29
23	4.81	23.37	1167.10	6.77	7.28	4.98	35.31	1316.00	4.17	6.40
24	2.28	7.49	888.00	1.21	9.79	2.25	12.01	885.80	5.17	9.73
25	4.46	2.98	347.30	1.16	24.25	4.74	4.09	294.80	2.17	28.06
26	2.34	12.49	706.50	1.24	12.10	3.41	36.80	634.90	1.02	12.62
27	2.47	10.07	1074.30	9.02	8.08	3.04	12.48	1189.10	9.02	7.28
28	3.93	4.89	453.30	.77	18.75	6.53	8.51	374.70	2.03	21.71
29	4.25	17.23	1029.00	5.37	8.30	4.84	28.82	1181.70	4.68	7.14
30	2.55	13.36	1008.20	9.55	8.56	2.72	6.52	934.10	19.46	9.31
31	3.69	2.74	347.80	.83	24.40	3.87	1.65	286.80	21.59	29.42
32	3.61	10.07	805.80	1.13	10.68	5.23	29.07	602.30	26.78	13.36
BAG (ACT.)	3.15	9.76	836.70	5.38	10.30	4.10	23.75	809.50	5.72	10.32
BAG (CALC.)	2.83	11.03	838.50	4.29	10.26	3.77	24.43	866.20	5.45	9.68
33	.49	4.41	161.90	.19	52.09	1.30	22.62	137.80	.09	50.01
34	5.61	78.81	1927.80	1.92	4.29	17.55	249.70	1624.10	.71	4.28
35	2.21	43.09	1006.60	.86	8.21	9.50	116.76	818.70	.38	8.60
36	1.46	28.12	739.50	.72	11.26	9.27	60.11	591.70	.35	12.40
37	1.09	3.96	508.90	1.23	17.13	1.41	24.79	473.20	1.13	17.18
38	.34	4.87	452.60	1.49	19.24	.61	7.73	556.60	1.74	15.55
39	.32	3.37	523.30	1.11	15.76	.56	4.99	628.40	3.38	13.91

RESULTS EXPRESSED IN GRAMS/MILE - GRAMS/MINUTE FOR ZERO MPH

LISTING OF MODAL RESULTS ON INDIVIDUAL VEHICLES

NEWARK, N.J.

	VEH	YEAR	MAKE	MODL	CID	VEH	YEAR	MAKE	MODL	CID
	15	73	CAPR	2000	122	16	73	CHEV	VEGA	140
MODE NO.	HC	CO	CO2	NOXC	MPG	HC	CO	CO2	NOXC	MPG
1	2.91	46.37	396.30	.14	18.55	1.75	10.26	649.10	4.97	13.23
2	2.04	13.38	227.80	.75	34.77	1.29	13.63	229.10	1.44	34.86
3	4.93	74.22	413.50	.48	16.26	3.20	17.21	702.00	1.81	12.01
4	1.82	19.27	493.10	.13	16.77	1.55	13.64	475.10	2.66	17.70
5	1.44	7.20	405.20	.06	21.08	1.08	5.54	330.50	4.27	25.90
6	1.86	6.44	170.80	1.28	47.51	.50	4.28	155.10	.44	54.31
7	2.50	39.00	341.70	4.12	21.60	1.37	21.79	498.00	6.32	16.54
8	.50	4.71	112.80	.46	72.88	.56	4.79	180.70	2.74	46.71
9	1.28	8.45	326.50	8.46	25.81	.76	5.09	431.90	4.00	20.07
10	1.90	10.52	114.70	.56	64.66	.92	4.50	158.40	1.03	52.71
11	3.92	93.02	325.30	4.72	18.34	1.08	18.11	526.60	5.12	15.89
12	2.19	11.43	126.00	.58	58.81	1.45	5.14	176.90	.21	46.82
13	3.91	78.15	330.10	5.20	19.07	1.12	24.41	503.80	5.12	16.26
14	2.14	7.32	89.70	.42	82.19	.81	3.29	146.10	.69	57.69
15	1.33	25.63	167.30	.70	41.91	.61	3.93	205.00	1.60	41.65
16	2.39	44.07	147.20	.55	39.62	2.17	21.37	511.40	.69	16.08
17	2.83	30.65	350.60	9.83	21.77	1.46	4.74	553.30	5.58	15.70
18	2.86	9.97	171.30	.47	45.27	.51	2.74	163.80	.91	52.29
19	1.80	16.85	321.40	10.76	25.10	1.23	9.03	507.10	4.78	16.90
20	2.50	6.44	174.60	.46	46.07	.69	7.27	202.90	.82	40.99
21	4.51	76.39	365.30	5.33	17.76	1.33	26.38	618.00	5.62	13.37
22	2.00	13.41	121.80	.71	59.48	1.07	5.59	181.10	.64	45.92
23	3.86	34.84	395.10	6.79	19.21	1.87	7.12	667.80	5.08	12.96
24	1.72	19.50	381.50	8.59	21.25	.77	4.95	474.50	4.13	18.31
25	1.59	9.94	99.70	.90	73.74	1.02	4.19	155.10	.75	53.82
26	2.08	28.50	90.20	.17	62.69	1.36	9.95	260.40	1.00	31.66
27	2.04	19.46	374.40	10.71	21.57	.81	2.59	526.90	4.82	16.64
28	1.90	11.54	114.50	.49	64.01	.92	17.88	175.90	.54	42.89
29	2.64	29.84	430.60	5.38	18.27	1.61	2.88	523.90	3.82	16.64
30	1.34	8.44	393.40	8.66	21.60	1.04	10.72	524.90	4.47	16.28
31	1.72	3.18	117.20	1.03	69.53	1.01	3.14	158.10	1.32	53.39
32	1.18	13.61	111.90	.16	64.77	1.23	9.77	234.10	1.16	35.03
BAG (ACT.)	2.35	32.03	304.50	4.61	24.50	1.17	9.65	408.20	3.71	20.78
BAG (CALC.)	2.05	21.58	320.70	4.45	24.58	1.16	8.81	410.00	3.58	20.76
33	.36	6.04	7.90	.03	478.89	.27	2.28	60.10	.14	137.52
34	4.52	141.20	370.90	0.00	14.62	3.13	21.60	741.50	1.49	11.30
35	3.04	67.25	483.30	.46	14.83	1.43	8.83	367.50	.63	23.00
36	1.44	18.88	582.90	1.44	14.38	1.13	16.70	446.50	.67	18.63
37	.63	6.86	332.30	1.44	25.72	.85	2.52	237.40	2.65	36.37
38	.75	3.67	253.90	3.17	33.87	.70	1.74	259.80	2.75	33.52
39	.72	1.86	218.70	4.45	39.65	.66	2.37	300.30	3.67	28.99

RESULTS EXPRESSED IN GRAMS/MILE - GRAMS/MINUTE FOR ZERO MPH

LISTING OF MODAL RESULTS ON INDIVIDUAL VEHICLES

NEWARK, N.J.

	VEH	YEAR	MAKE	MODL	CID	VEH	YEAR	MAKE	MODL	CID
	17	73	CHEV	NOVA	250	18	73	CHEV	CHEL	307
MODE NO.	HC	CO	CO2	NOXC	MPG	HC	CO	CO2	NOXC	MPG
1	1.15	14.08	722.60	.28	11.86	3.89	37.93	1263.80	4.33	6.64
2	4.91	9.72	426.70	.27	19.40	2.25	1.86	515.40	1.16	16.89
3	3.29	34.96	921.70	1.34	8.99	5.60	7.71	1522.50	2.99	5.72
4	1.54	8.68	607.70	3.27	14.17	2.47	11.46	776.90	2.29	11.06
5	1.39	8.59	500.40	3.33	17.12	2.45	13.06	643.80	4.70	13.21
6	2.17	2.86	260.60	2.17	32.63	2.41	3.87	349.60	1.04	24.43
7	.92	17.92	599.80	3.69	14.07	5.47	147.64	674.70	3.05	9.60
8	1.76	4.47	276.80	2.14	30.69	2.15	8.23	341.50	1.51	24.57
9	.81	1.54	489.70	4.44	17.94	2.23	23.65	688.40	5.86	12.11
10	3.62	2.99	410.20	1.24	20.82	3.07	3.30	315.90	1.16	26.83
11	1.21	38.01	571.30	3.62	13.98	4.42	144.57	839.80	4.35	8.21
12	4.62	1.56	241.60	2.09	34.31	4.13	5.29	355.70	1.39	23.54
13	1.53	31.54	608.10	2.37	13.40	4.21	119.30	896.20	4.76	8.09
14	2.43	1.15	211.40	1.53	40.18	3.21	3.73	264.80	.97	31.60
15	.96	5.26	258.10	.31	32.94	1.90	1.50	414.30	.71	21.00
16	1.53	13.98	1292.50	1.74	6.73	4.46	11.25	1237.90	1.16	6.99
17	2.12	31.62	638.50	3.33	12.77	2.98	44.06	939.40	4.57	8.72
18	2.67	.87	235.40	1.05	36.19	2.58	3.35	340.40	1.00	25.08
19	1.75	30.54	540.90	2.06	14.93	3.17	60.02	862.50	3.30	9.18
20	4.14	1.19	276.80	.72	30.42	2.96	4.99	431.10	1.11	19.80
21	2.63	60.70	586.90	9.86	12.85	6.18	207.70	912.90	2.35	7.05
22	3.18	1.17	274.40	4.98	31.00	4.24	6.31	347.90	1.35	23.91
23	2.80	15.40	665.00	3.14	12.71	3.61	26.09	1023.50	3.34	8.25
24	.48	6.02	546.10	3.33	15.93	2.48	37.83	712.00	3.70	11.39
25	3.09	1.39	218.90	1.80	38.44	4.24	5.46	265.80	1.10	30.84
26	1.68	3.51	405.30	1.83	21.33	2.94	5.88	586.10	.96	14.68
27	1.34	10.28	540.50	4.17	15.82	2.16	29.06	817.30	4.56	10.20
28	3.29	1.93	269.70	1.25	31.34	3.44	4.05	334.70	.92	25.22
29	2.28	10.16	657.30	2.59	13.04	3.31	24.36	986.50	2.62	8.57
30	1.18	9.06	581.80	3.78	14.80	4.84	112.87	672.00	2.42	10.26
31	3.59	1.96	200.70	1.56	41.25	3.41	5.48	255.40	1.29	32.29
32	2.22	2.73	418.00	.34	20.67	3.23	0.00	526.40	1.52	16.54
BAG (ACT.)	2.21	14.84	523.20	3.48	16.03	3.15	47.60	670.90	3.10	11.74
BAG (CALC.)	1.96	10.99	542.10	3.61	15.69	3.04	37.28	681.00	2.67	11.85
33	.13	2.37	88.00	.06	96.33	.58	.68	137.40	.23	63.26
34	2.80	39.91	1017.40	.53	8.17	6.56	10.44	1660.40	1.76	5.23
35	1.07	9.74	842.80	.87	10.30	3.30	5.64	861.10	.77	10.08
36	3.05	5.63	704.80	1.61	12.27	1.71	4.23	622.20	.50	13.99
37	.79	3.70	470.00	1.91	18.56	1.33	3.08	410.60	.76	21.15
38	.67	2.49	335.20	2.23	26.01	.66	5.68	407.60	1.55	21.20
39	.49	3.00	386.80	4.12	22.58	.70	13.67	475.00	2.55	17.80

RESULTS EXPRESSED IN GRAMS/MILE - GRAMS/MINUTE FOR ZERO MPH

LISTING OF MODAL RESULTS ON INDIVIDUAL VEHICLES

NEWARK, N.J.

MODE NO.	VEH 19 HC	YEAR 73 CO	MAKE CHEV CO2	MODL NOVA NOXC	CID 350 MPG	VEH 20 HC	YEAR 73 CO	MAKE CHEV CO2	MODL BELA NOXC	CID 350 MPG
1	1.96	13.03	977.30	10.23	8.84	2.38	10.40	516.50	5.18	16.42
2	2.89	4.51	494.10	.43	17.39	1.25	13.06	386.50	1.06	21.60
3	3.78	3.63	1228.00	3.04	7.12	2.75	22.97	644.70	2.74	12.87
4	2.57	3.19	706.40	2.62	12.33	1.66	11.64	417.00	2.84	20.15
5	2.58	6.04	507.80	4.32	16.89	1.23	7.02	322.50	3.55	26.30
6	1.88	1.93	219.80	.52	38.79	.77	9.81	187.20	.60	43.28
7	3.65	64.20	745.30	5.23	10.35	1.90	30.42	394.90	5.61	19.78
8	2.70	5.62	257.90	.92	32.24	2.02	6.37	165.10	.29	48.90
9	2.40	11.52	610.20	5.52	13.96	1.34	12.05	334.20	5.13	24.83
10	2.89	2.99	294.70	1.04	28.76	1.03	10.42	183.20	.44	43.76
11	2.42	23.90	900.30	6.04	9.39	1.93	27.09	429.50	5.88	18.56
12	4.17	6.52	321.60	.66	25.72	2.03	10.94	190.40	.36	41.47
13	2.57	21.55	821.20	6.61	10.28	1.74	19.36	453.00	5.89	18.15
14	3.03	2.68	239.40	.47	35.05	.60	8.13	193.60	.35	42.61
15	2.37	1.46	452.10	1.22	19.21	.90	8.53	345.40	1.03	24.54
16	4.26	28.55	1132.50	2.11	6.02	4.29	29.52	939.90	2.68	8.88
17	2.79	.73	202.60	5.38	41.75	1.90	7.72	485.60	6.84	17.62
18	2.79	13.01	979.70	1.01	8.80	.68	7.10	244.00	.72	34.49
19	2.90	8.87	724.20	5.89	11.88	1.73	5.90	461.00	6.27	18.66
20	2.58	1.92	393.20	1.05	21.95	1.19	13.08	246.80	.92	32.74
21	3.81	78.82	838.40	5.19	9.11	2.54	51.94	470.50	6.03	15.84
22	4.22	4.13	284.20	.77	29.19	.96	11.73	247.50	.51	33.00
23	3.75	14.93	898.10	3.93	9.51	2.38	12.58	527.40	3.23	16.00
24	2.52	15.51	624.40	5.57	13.51	2.64	10.60	363.00	5.15	22.87
25	3.18	3.14	260.70	.83	32.19	1.42	7.24	168.40	.38	48.16
26	3.93	4.87	607.10	.64	14.15	2.46	8.71	555.90	1.52	15.37
27	2.67	21.35	704.00	5.96	11.90	1.57	10.36	426.90	5.75	19.80
28	3.25	3.44	293.10	.62	28.74	.50	2.43	257.60	.58	33.75
29	3.12	15.03	813.50	3.54	10.48	2.29	9.03	490.70	3.55	17.33
30	2.87	43.44	693.50	4.70	11.51	1.62	15.77	396.90	5.92	20.79
31	3.48	4.80	282.70	.75	29.46	2.03	6.93	162.90	.41	49.25
32	3.68	1.44	489.50	.60	17.63	1.18	5.09	372.60	.35	23.09
BAG (ACT.)	3.06	19.19	584.20	3.76	14.22	2.18	26.14	645.40	2.78	12.80
BAG (CALC.)	2.71	14.98	605.10	3.40	13.93	1.43	18.40	402.20	2.55	20.37
33	.58	.60	123.70	.24	70.17	.39	1.40	106.40	.12	80.81
34	7.[illegible]3	9.63	1543.10	1.81	5.62	3.38	9.00	1264.50	1.09	6.88
35	4.6[illegible]	5.77	775.20	.63	11.11	1.49	21.27	816.90	.70	10.38
36	3.31	3.56	512.50	.42	16.79	.86	11.44	517.20	.39	16.50
37	1.76	2.13	332.50	.54	25.99	.59	8.65	331.50	.31	25.58
38	1.[illegible]8	3.21	354.30	1.5[illegible]	24.47	.50	3.84	274.80	.47	31.43
39	.26	9.23	412.10	3.20	20.77	.39	4.22	247.20	.88	34.80

RESULTS EXPRESSED IN GRAMS/MILE - GRAMS/MINUTE FOR ZERO MPH

LISTING OF MODAL RESULTS ON INDIVIDUAL VEHICLES

NEWARK, N.J.

	VEH	YEAR	MAKE	MODL	CID	VEH	YEAR	MAKE	MODL	CID
	21	73	CHEV	IMPA	350	22	73	CHEV	IMPA	350
MODE NO.	HC	CO	CO2	NOXC	MPG	HC	CO	CO2	NOXC	MPG
1	4.04	24.80	1174.60	6.19	7.24	3.95	60.40	1136.00	7.75	7.14
2	1.27	20.10	535.40	1.00	15.54	1.76	61.33	633.80	.73	12.06
3	4.36	54.97	1290.60	1.05	6.38	5.22	142.00	1115.60	3.06	6.55
4	2.29	13.94	817.30	2.10	10.49	2.54	33.47	757.90	2.31	10.84
5	2.21	8.28	717.80	3.71	12.03	2.33	20.09	670.20	4.17	12.52
6	.76	.41	332.50	.44	26.45	1.09	20.85	369.70	1.35	21.86
7	4.42	123.33	800.50	2.60	8.80	3.94	101.29	843.30	6.42	8.74
8	2.04	2.66	320.90	1.89	26.77	.88	10.61	351.10	2.71	23.95
9	2.36	23.79	695.20	5.45	11.99	2.02	20.95	627.00	6.35	13.32
10	.90	2.29	287.00	.92	30.24	.95	11.97	432.50	2.06	19.54
11	4.67	163.15	856.00	3.26	7.87	3.35	53.67	898.90	8.81	8.93
12	1.60	3.79	348.80	1.37	24.67	1.51	15.62	374.50	2.06	21.98
13	4.43	115.11	889.00	4.88	8.19	3.39	48.66	924.80	8.51	8.77
14	1.06	2.65	294.50	.96	29.39	.61	7.04	334.40	1.63	25.55
15	.30	6.67	370.30	.41	23.25	1.19	26.73	518.40	.20	15.73
16	1.64	27.63	981.50	1.33	8.62	3.72	87.53	1150.70	.65	6.83
17	3.12	30.66	873.90	7.01	9.52	3.30	26.85	973.80	7.80	8.65
18	1.05	.93	333.50	.58	26.24	1.16	15.55	437.90	1.29	19.05
19	2.96	28.52	886.90	3.67	9.43	2.81	26.98	876.20	5.42	9.57
20	.82	4.89	437.70	.58	19.81	1.69	35.82	663.00	.80	12.25
21	5.56	183.94	908.40	2.02	7.30	5.49	174.28	910.30	3.14	7.39
22	1.45	4.66	353.30	.92	24.30	.99	12.63	441.90	2.17	19.09
23	3.22	24.40	1024.30	1.95	8.27	3.25	32.82	1006.60	5.33	8.31
24	2.64	34.12	749.10	3.78	10.94	2.52	26.67	760.80	5.36	10.95
25	1.17	2.01	270.90	1.17	31.95	.70	6.40	355.20	2.27	24.15
26	1.38	10.70	586.40	.52	14.61	1.15	29.25	733.70	.38	11.33
27	2.73	33.83	826.60	4.80	9.99	2.63	.44	856.00	7.38	10.26
28	1.16	3.73	329.60	.91	26.17	.83	13.67	367.20	1.28	22.68
29	3.10	17.00	1009.40	2.56	8.49	3.23	33.35	998.20	2.74	8.37
30	4.14	95.46	738.30	2.77	9.85	3.03	54.54	814.10	4.85	9.76
31	1.74	4.14	288.30	1.45	29.55	3.24	14.41	240.70	2.12	32.44
32	.97	11.56	513.30	.40	16.60	2.21	29.68	610.50	.41	13.36
BAG (ACT.)	2.31	49.15	661.30	3.25	11.90	2.40	43.84	689.50	4.85	11.59
BAG (CALC.)	2.27	35.17	684.50	2.66	11.88	2.24	34.82	715.40	3.85	11.42
33	.43	10.36	114.40	.10	67.22	.64	19.41	99.30	.02	67.32
34	3.52	77.07	1414.10	.96	5.74	6.20	186.12	1276.80	0.00	5.59
35	.90	21.00	313.70	.48	10.45	1.45	59.49	924.40	.14	8.68
36	.79	16.98	585.00	.45	14.45	1.33	49.24	616.20	.11	12.72
37	1.13	5.47	423.70	.72	20.37	1.31	29.55	418.30	.49	18.93
38	.81	3.01	448.70	1.28	19.46	1.04	8.72	434.40	2.04	19.66
39	.75	6.01	464.90	2.46	18.62	.82	3.16	482.60	3.58	18.11

RESULTS EXPRESSED IN GRAMS/MILE - GRAMS/MINUTE FOR ZERO MPH

LISTING OF MODAL RESULTS ON INDIVIDUAL VEHICLES

NEWARK, N.J.

	VEH	YEAR	MAKE	MODL	CID	VEH	YEAR	MAKE	MODL	CID
	23	73	CHEV	STAW	350	24	73	CHRY	NEWP	400
MODE NO.	HC	CO	CO2	NOXC	MPG	HC	CO	CO2	NOXC	MPG
1	5.07	143.68	1549.30	6.90	4.96	11.96	24.85	1158.40	3.70	7.18
2	1.88	14.14	584.90	.60	14.48	2.72	8.41	490.20	.60	17.33
3	4.41	82.18	1627.90	5.59	5.01	7.18	5.33	1147.60	2.51	7.53
4	2.42	46.81	1168.90	6.03	7.10	2.65	9.03	810.20	1.21	10.66
5	2.95	40.73	809.50	6.87	10.05	2.72	6.76	624.90	3.22	13.78
6	.81	9.25	452.90	.51	18.88	1.71	3.15	342.90	2.48	25.12
7	4.79	154.81	1158.80	2.19	6.26	4.00	44.22	808.00	3.55	9.97
8	.74	6.72	439.40	1.67	19.62	1.56	8.68	363.10	1.93	23.25
9	3.71	116.62	807.00	4.62	9.00	2.98	13.48	653.60	3.56	12.97
10	1.76	5.09	359.10	1.28	23.83	2.71	8.27	300.30	.98	27.57
11	4.19	189.62	1108.10	4.77	6.25	3.55	70.47	816.80	3.83	9.45
12	2.89	7.28	428.40	2.75	19.77	4.03	11.29	360.90	1.43	22.67
13	3.98	189.92	1252.50	5.15	5.68	3.57	19.52	927.00	4.78	9.16
14	2.74	4.53	314.40	1.05	26.88	2.45	5.90	281.80	1.15	29.70
15	1.81	12.43	586.00	.70	14.52	2.63	5.17	363.80	.46	23.34
16	2.77	58.01	1402.40	3.87	5.91	2.77	34.38	692.90	6.93	11.74
17	3.98	159.75	1265.60	5.94	5.86	4.13	17.43	913.30	3.94	9.31
18	1.44	8.19	381.00	.76	22.28	1.65	6.36	332.60	1.68	25.52
19	3.68	135.40	1227.10	3.42	6.11	3.15	25.36	790.40	2.67	10.56
20	1.18	1.58	374.80	1.02	23.29	2.13	5.90	374.40	1.79	22.73
21	5.62	230.63	1319.60	4.41	5.22	6.08	134.70	953.60	2.81	7.49
22	2.27	5.90	384.30	1.43	22.15	3.00	4.90	318.90	.90	26.41
23	3.66	86.51	1549.90	2.46	5.23	3.44	16.33	1018.20	2.31	8.41
24	4.55	147.58	936.20	3.63	7.51	2.80	14.39	738.80	3.48	11.52
25	2.38	5.64	324.80	1.61	26.08	2.95	8.26	251.40	.80	32.42
26	2.29	15.14	553.60	1.03	15.18	2.60	5.37	575.00	15.82	15.00
27	3.91	156.79	1063.80	4.18	6.71	2.98	17.05	855.80	3.53	9.95
28	.66	5.71	430.20	1.33	20.11	3.18	9.06	300.00	.91	27.37
29	2.36	57.65	1448.40	4.61	5.74	3.05	9.78	1015.00	2.24	8.53
30	4.30	144.36	969.90	3.71	7.33	3.04	18.54	814.10	3.66	10.41
31	2.17	6.66	366.30	1.72	23.13	3.08	7.58	270.70	1.96	30.36
32	1.62	14.27	543.90	.34	15.53	2.08	2.83	536.40	7.63	16.21
BAG (ACT.)	2.61	83.40	866.10	3.77	8.83	3.14	28.48	682.40	4.85	12.04
BAG (CALC.)	2.53	63.59	862.40	3.24	9.15	4.11	19.59	679.20	3.87	12.28
33	.40	4.62	101.60	.09	80.59	.51	5.38	115.60	.08	70.62
34	3.54	37.09	1193.70	.75	7.03	5.77	71.85	1404.80	.61	5.78
35	1.84	27.00	633.50	.47	13.02	2.76	27.97	709.40	.33	11.65
36	.86	15.33	401.90	.61	20.70	1.95	18.51	555.10	.36	15.03
37	1.10	11.30	480.40	.55	17.69	1.89	5.19	401.60	2.35	21.35
38	.57	7.51	509.80	1.31	16.96	4.30	2.98	423.70	5.61	20.08
39	.42	6.08	635.80	3.68	13.74	3.94	6.95	477.90	4.73	17.70

RESULTS EXPRESSED IN GRAMS/MILE - GRAMS/MINUTE FOR ZERO MPH

LISTING OF MODAL RESULTS ON INDIVIDUAL VEHICLES

NEWARK, N.J.

	VEH	YEAR	MAKE	MODL	CID	VEH	YEAR	MAKE	MODL	CID
	25	73	DATS	SEDA	71	26	73	DODG	DART	225
MODE NO.	HC	CO	CO2	NOXC	MPG	HC	CO	CO2	NOXC	MPG
1	2.66	23.08	128.00	1.82	51.39	3.59	67.77	715.50	7.53	10.65
2	.64	3.75	289.30	1.02	29.86	2.64	59.35	338.80	.92	20.15
3	3.49	25.52	666.10	3.00	12.37	5.37	137.21	740.50	3.83	9.12
4	1.15	14.99	462.50	2.14	18.12	2.70	49.82	559.80	5.10	13.73
5	.95	8.27	343.40	1.99	24.69	2.11	17.06	423.00	5.57	19.44
6	.49	3.88	157.10	.49	53.87	1.29	13.24	169.60	1.61	45.63
7	1.59	21.58	315.70	2.78	25.03	4.15	97.18	528.80	2.50	12.78
8	.80	5.43	123.60	1.47	65.90	1.29	14.61	158.60	1.72	47.81
9	.84	3.48	77.90	2.80	103.16	2.44	39.33	433.40	5.91	17.65
10	.60	2.86	125.60	1.09	67.24	1.37	20.08	190.10	1.50	39.27
11	2.24	50.82	293.40	2.08	23.33	4.19	143.72	497.30	3.19	12.05
12	.78	3.85	139.20	1.26	60.08	.66	26.23	225.50	1.66	33.02
13	2.71	47.65	340.40	2.45	20.94	3.86	106.21	1232.40	4.93	6.29
14	.65	1.81	115.90	1.11	73.47	1.29	14.77	126.00	1.44	57.90
15	.90	4.92	161.10	.57	51.70	1.87	29.11	242.10	1.02	30.21
16	1.99	16.11	278.80	0.00	28.59	4.98	115.44	588.60	1.81	11.29
17	2.63	41.86	354.30	2.32	20.72	3.01	46.44	560.60	4.76	13.80
18	.94	3.03	124.40	1.00	67.17	1.53	20.90	216.20	1.53	34.96
19	2.10	25.01	316.60	1.90	24.50	2.76	54.51	563.30	9.27	13.49
20	.88	2.96	135.60	.19	62.05	2.00	27.01	235.70	1.44	31.20
21	4.36	79.41	337.30	1.81	18.65	4.83	151.05	569.50	4.61	10.79
22	.91	3.58	116.50	1.12	71.00	1.68	24.02	120.30	1.35	54.33
23	2.33	25.79	480.10	2.31	16.81	3.24	44.12	705.00	7.72	11.31
24	1.32	18.09	325.60	3.24	24.78	1.32	57.00	453.80	5.77	16.21
25	.66	2.00	114.80	1.03	73.94	3.77	13.90	164.50	.35	44.76
26	1.38	3.80	203.60	.78	41.67	2.38	37.29	346.80	.91	21.49
27	1.44	16.97	327.00	2.09	24.78	2.52	108.02	585.70	6.23	11.63
28	.60	1.69	106.10	1.06	80.21	1.41	20.70	55.80	1.63	95.64
29	2.43	28.75	429.30	1.53	18.41	1.89	38.15	630.20	6.99	12.75
30	1.37	21.00	344.80	3.05	23.23	2.41	99.81	475.90	1.81	13.86
31	.72	1.82	126.50	1.17	67.42	1.44	14.33	192.70	1.53	40.38
32	.98	1.12	156.00	.54	55.17	2.45	38.42	343.60	1.14	21.56
BAG (ACT.)	1.44	17.99	288.70	2.40	27.60	2.61	60.22	424.50	3.76	16.83
BAG (CALC.)	1.28	14.62	290.20	1.90	27.98	1.28	14.62	290.20	1.90	27.98
33	.22	2.76	22.50	.03	322.33	.68	18.68	77.10	.08	81.72
34	2.41	19.05	515.70	.43	16.04	8.77	225.98	948.80	.78	6.66
35	.73	9.25	507.30	.70	16.93	4.32	118.45	482.00	.31	13.02
36	.54	7.09	459.80	1.01	18.78	3.01	76.46	316.40	.26	19.90
37	.28	4.06	311.90	1.17	27.81	1.76	21.41	237.00	1.20	32.13
38	.24	2.77	231.50	1.22	37.51	1.08	3.88	259.50	3.93	32.99
39	.66	1.83	178.70	2.23	48.32	1.18	7.72	318.80	4.48	26.52

RESULTS EXPRESSED IN GRAMS/MILE - GRAMS/MINUTE FOR ZERO MPH

LISTING OF MODAL RESULTS ON INDIVIDUAL VEHICLES

NEWARK, N.J.

	VEH	YEAR	MAKE	MODL	CID	VEH	YEAR	MAKE	MODL	CID
	27	73	DODG	CHAR	318	28	73	FORD	PINT	122
MODE NO.	HC	CO	CO2	NOXC	MPG	HC	CO	CO2	NOXC	MPG
1	4.61	69.88	1276.80	4.60	6.33	2.27	42.29	558.90	6.08	14.03
2	1.46	10.97	401.30	1.17	20.97	1.63	23.11	262.60	1.41	29.19
3	3.84	43.05	1326.30	2.49	6.31	3.12	75.92	449.20	2.53	15.34
4	2.86	38.09	999.10	5.05	8.31	2.43	32.69	489.00	4.70	16.19
5	3.40	26.49	622.80	4.86	13.14	1.57	13.75	395.60	4.69	21.02
6	2.75	4.81	235.80	3.76	35.21	1.08	9.15	179.60	1.79	44.96
7	6.88	63.39	869.80	7.36	8.95	1.88	28.67	386.40	5.06	20.29
8	2.53	9.12	243.50	2.84	33.38	.93	9.09	164.80	1.99	48.76
9	3.58	29.42	669.90	11.53	12.20	1.27	17.64	324.00	4.47	24.95
10	4.23	7.86	224.90	2.22	35.41	.88	11.12	117.60	1.64	64.38
11	2.94	47.27	936.20	4.33	8.70	2.99	54.00	411.80	4.63	17.54
12	6.23	13.61	234.80	6.80	32.16	1.37	11.71	158.60	2.37	48.94
13	6.12	42.94	967.40	10.95	8.42	2.65	56.21	428.60	4.70	16.89
14	3.82	10.02	203.50	3.09	38.36	1.00	11.16	129.30	1.51	59.17
15	1.71	4.98	257.40	.44	32.79	1.60	28.59	121.80	.53	51.66
16	5.54	4.10	773.50	8.78	11.13	7.68	69.02	202.10	.85	26.50
17	5.20	44.42	950.30	7.90	8.56	2.43	44.31	455.30	5.30	16.66
18	3.65	5.32	231.30	2.67	35.33	1.22	12.71	159.30	1.48	48.46
19	4.37	38.60	938.10	6.06	8.76	2.15	34.59	391.90	4.67	19.59
20	3.44	3.97	439.60	2.59	19.43	1.32	9.73	181.70	1.59	44.12
21	4.98	57.89	1017.20	8.53	7.90	2.78	42.01	497.80	6.11	15.50
22	4.93	7.15	250.90	3.33	31.95	1.79	12.37	163.20	1.74	47.13
23	5.41	27.25	1008.40	4.47	8.31	2.82	49.55	492.40	4.29	15.32
24	4.81	24.77	718.40	.80	11.49	1.65	25.40	399.10	4.88	19.98
25	4.15	8.69	205.80	4.09	38.15	.86	5.69	125.20	3.49	64.85
26	2.43	0.00	474.00	2.24	18.42	2.28	37.22	228.30	1.20	30.19
27	3.96	33.71	821.10	8.13	10.01	2.05	38.95	385.10	5.18	19.60
28	4.47	3.06	189.30	3.18	42.61	.99	11.99	129.70	1.29	58.51
29	4.37	42.17	897.20	3.12	9.08	2.58	37.59	458.60	5.64	16.88
30	3.93	48.93	832.50	5.94	9.63	1.79	31.52	401.30	4.49	19.44
31	3.75	7.71	115.40	4.01	63.66	.89	6.26	132.70	1.72	61.06
32	2.22	0.00	361.60	2.38	24.12	2.13	34.43	161.70	1.00	39.88
BAG (ACT.)	4.37	33.04	624.10	6.42	12.87	2.32	28.21	326.60	4.15	23.46
BAG (CALC.)	4.21	26.07	637.60	5.31	12.83	1.70	24.70	346.60	4.42	22.71
33	.40	6.27	96.70	.05	82.32	.24	5.39	22.90	.09	276.22
34	4.37	78.58	1205.10	.47	6.61	4.07	107.08	427.10	0.00	14.59
35	1.89	13.97	795.70	.81	10.78	3.94	64.75	417.70	.68	16.68
36	1.12	5.87	601.30	.84	14.45	3.02	46.50	444.30	1.84	16.84
37	2.16	3.83	353.80	3.43	24.22	1.70	17.52	296.00	2.52	26.98
38	2.76	8.47	372.20	5.37	22.64	.31	6.92	257.40	3.45	32.96
39	2.49	20.35	426.90	7.26	19.01	.32	4.10	234.10	4.85	36.74

RESULTS EXPRESSED IN GRAMS/MILE - GRAMS/MINUTE FOR ZERO MPH

LISTING OF MODAL RESULTS ON INDIVIDUAL VEHICLES

NEWARK, N.J.

	VEH	YEAR	MAKE	MODL	CID	VEH	YEAR	MAKE	MODL	CID
	29	73	FORD	PINT	122	30	73	FORD	MAVE	302
MODE NO.	HC	CO	CO2	NOXC	MPG	HC	CO	CO2	NOXC	MPG
1	2.95	47.15	706.10	9.10	11.24	4.73	39.47	847.50	4.14	9.60
2	1.76	32.97	181.30	.93	37.18	2.98	30.84	424.40	2.41	18.40
3	4.71	121.41	520.60	3.13	12.22	6.30	82.86	843.40	3.70	8.93
4	1.72	26.43	466.80	1.93	17.27	2.70	15.09	716.50	2.47	11.85
5	1.30	7.88	398.40	6.76	21.39	2.17	10.38	655.50	2.72	13.08
6	.64	4.31	141.10	2.74	59.21	2.22	12.47	363.20	.23	22.77
7	1.61	18.21	342.90	.66	23.57	3.28	13.25	770.40	6.63	11.07
8	.54	1.62	174.30	5.84	49.71	2.81	18.39	413.10	.59	19.68
9	.91	2.10	388.60	7.64	22.48	2.28	13.86	648.20	3.81	13.11
10	1.93	9.68	147.20	2.48	52.66	3.89	18.16	308.30	.45	25.42
11	1.52	15.34	487.60	10.80	17.18	3.21	15.90	808.20	5.62	10.52
12	3.12	9.14	163.40	3.37	47.30	4.82	20.62	372.10	.31	21.14
13	1.74	15.64	526.30	11.69	15.95	3.17	16.70	856.00	5.37	9.95
14	1.64	6.50	135.60	2.23	58.77	3.75	14.28	329.70	.27	24.38
15	1.56	22.65	142.00	1.10	48.62	1.77	18.70	375.60	.46	21.62
16	4.19	1 9.00	298.90	4.58	18.36	5.86	75.40	1052.70	.84	7.46
17	1.94	14.36	532.90	12.39	15.80	3.26	21.52	820.90	3.84	10.26
18	1.68	7.11	128.60	2.22	61.17	3.41	18.78	350.90	.46	22.69
19	1.60	24.07	466.80	7.92	17.41	2.94	12.48	772.20	4.05	11.08
20	2.76	12.54	153.80	1.09	48.70	3.48	20.51	410.10	.63	19.58
21	1.87	31.58	592.00	11.38	13.71	4.46	37.27	933.30	6.48	8.82
22	2.91	11.08	143.80	1.86	52.07	4.61	16.91	332.40	.55	23.76
23	3.06	35.88	621.80	8.09	12.90	4.11	22.56	905.00	3.38	9.31
24	1.18	5.59	432.30	9.63	19.95	2.17	9.57	718.10	4.03	11.99
25	1.19	5.15	129.10	2.88	62.96	3.61	13.98	331.20	.49	24.34
26	2.02	24.70	223.70	1.36	33.00	2.76	16.83	546.60	.84	15.26
27	1.07	7.21	497.20	10.43	17.34	2.70	16.64	754.30	3.99	11.25
28	2.33	12.07	144.30	3.00	52.01	4.16	15.81	358.00	.53	22.41
29	2.37	33.25	541.40	28.31	14.76	3.94	35.32	822.70	2.85	9.96
30	1.05	15.97	413.80	9.11	20.07	2.38	10.65	784.00	5.05	10.98
31	1.17	3.83	159.40	.85	52.48	4.05	12.21	286.30	.49	27.88
32	2.34	18.72	193.10	1.26	38.60	2.41	16.66	424.00	.45	19.39
BAG (ACT.)	2.02	18.61	388.80	5.22	20.91	3.33	23.61	655.10	2.59	12.63
BAG (CALC.)	1.72	18.01	333.10	5.74	24.19	2.98	20.37	650.20	2.42	12.83
33	.39	10.01	29.70	.03	190.19	.64	12.79	74.20	.04	92.14
34	4.02	122.35	433.60	.29	13.90	6.79	145.88	906.80	.41	7.67
35	2.31	73.30	295.90	.22	21.21	3.20	60.26	556.60	.28	13.42
36	1.82	47.78	250.60	.28	26.78	1.81	19.34	553.00	.45	15.07
37	1.18	21.60	182.90	1.03	40.24	.89	5.68	429.30	.73	20.12
38	.80	6.73	190.40	2.79	43.61	.83	10.54	439.00	1.04	19.37
39	.62	5.81	187.70	3.67	44.65	.97	11.47	422.50	1.17	20.01

RESULTS EXPRESSED IN GRAMS/MILE - GRAMS/MINUTE FOR ZERO MPH

LISTING OF MODAL RESULTS ON INDIVIDUAL VEHICLES

NEWARK, N.J.

	VEH	YEAR	MAKE	MODL	CID	VEH	YEAR	MAKE	MODL	CID
	31	73	FORD	TORI	351	32	73	FORD	TORI	351
MODE NO.	HC	CO	CO2	NOXC	MPG	HC	CO	CO2	NOXC	MPG
1	4.84	72.84	1078.50	17.82	7.35	4.75	119.43	1093.70	1.63	6.85
2	3.25	8.03	960.30	7.16	9.03	4.40	67.72	424.90	.44	16.28
3	6.41	149.99	1071.40	3.14	6.69	6.95	250.50	1194.50	.83	5.51
4	3.33	73.83	785.10	4.54	9.74	3.30	75.30	739.90	1.54	10.22
5	2.56	13.81	627.40	8.76	13.50	2.01	16.24	628.80	3.05	13.43
6	1.90	13.15	491.30	3.08	17.13	1.73	21.91	308.70	.74	25.46
7	3.24	16.70	810.20	16.57	10.48	2.48	17.90	799.10	5.98	10.63
8	2.36	30.56	572.40	6.68	14.13	1.75	20.41	293.40	1.16	26.81
9	2.79	18.93	748.10	12.33	11.28	2.38	20.05	650.50	3.58	12.87
10	2.24	32.26	442.10	3.38	17.75	4.78	33.06	263.90	.95	26.81
11	3.80	35.75	906.00	17.26	9.11	3.30	30.61	840.00	6.52	9.88
12	2.20	42.78	524.40	4.07	14.83	5.57	31.37	313.70	1.10	23.32
13	3.82	35.54	933.00	14.99	8.87	3.56	33.94	867.50	6.10	9.52
14	2.94	30.07	368.20	3.49	21.04	3.90	19.10	242.50	.87	31.15
15	2.68	20.61	526.10	1.38	15.65	2.96	58.97	469.70	.27	15.52
16	7.71	177.21	887.40	1.09	7.46	8.20	201.94	1119.90	1.13	6.07
17	4.38	49.30	781.20	13.10	10.17	3.69	44.04	908.90	4.20	8.97
18	2.14	22.45	533.20	3.62	15.43	1.93	30.00	379.00	.48	20.53
19	3.99	44.31	802.70	12.19	10.03	3.45	47.00	790.50	4.33	10.14
20	3.[illegible]9	34.15	436.70	3.55	17.75	2.48	43.63	386.70	.59	19.16
21	3.93	27.47	960.60	19.71	8.73	3.63	36.23	964.50	7.08	8.59
22	2.82	36.64	499.50	4.35	15.68	5.48	32.64	274.00	1.04	25.90
23	4.50	61.82	947.80	6.19	8.38	4.24	80.00	1027.60	2.07	7.61
24	2.94	18.28	750.90	12.65	11.26	2.72	24.77	724.80	4.03	11.49
25	2.[illegible]5	20.58	507.90	4.41	16.23	4.94	22.38	261.00	1.13	28.46
26	2.78	7.96	860.80	5.28	10.06	4.27	71.18	539.40	.36	13.35
27	3.64	30.61	897.40	14.18	9.27	3.34	35.76	779.50	4.22	10.49
28	2.71	34.62	453.20	3.90	17.19	5.73	36.25	245.50	.56	27.68
29	4.69	71.65	859.50	7.29	8.99	4.35	60.56	978.10	2.51	8.16
30	3.16	17.58	810.80	13.45	10.46	2.59	18.63	783.70	4.67	10.81
31	2.[illegible]4	28.54	449.40	3.89	17.73	3.63	19.63	250.10	1.40	30.35
32	2.87	35.47	576.30	2.20	13.84	3.93	73.98	462.70	.26	15.01
BAG (ACT.)	3.33	38.47	736.10	10.34	11.00	3.99	47.90	658.30	3.08	11.89
BAG (CALC.)	2.95	41.11	739.40	9.11	10.91	3.50	37.63	607.70	2.68	13.09
33	.93	15.25	229.[illegible]	1.27	34.67	.85	25.84	86.30	.04	68.48
34	8.[illegible]4	179.02	1501.50	1.16	4.91	10.64	309.73	1108.40	.39	5.45
35	5.12	118.38	1067.90	1.11	6.99	4.24	118.47	874.00	.45	8.27
36	3.18	67.79	591.70	.68	12.16	3.04	82.13	489.20	.23	14.14
37	1.53	29.58	363.80	.99	21.36	1.39	21.02	454.70	.58	18.03
38	1.39	16.72	339.70	3.42	23.96	1.73	10.08	382.90	1.86	21.96
39	.74	29.43	447.40	7.23	17.89	1.26	7.52	288.20	1.41	29.19

RESULTS EXPRESSED IN GRAMS/MILE - GRAMS/MINUTE FOR ZERO MPH

LISTING OF MODAL RESULTS ON INDIVIDUAL VEHICLES

NEWARK, N.J.

MODE NO.	VEH 33 HC	YEAR 73 CO	MAKE FORD CO2	MODL LTD NOXC	CID 400 MPG	VEH 34 HC	YEAR 73 CO	MAKE FORD CO2	MODL LTD NOXC	CID 400 MPG
1	2.84	15.33	1602.70	3.32	5.43	2.97	8.54	1269.40	13.50	6.87
2	1.38	10.50	579.40	1.70	14.79	.71	4.52	197.80	.87	42.84
3	4.46	24.92	1507.30	3.39	5.69	4.13	10.43	1669.00	4.32	5.23
4	1.66	10.06	861.20	1.70	10.06	1.02	2.53	860.80	8.30	10.23
5	1.68	7.07	691.00	2.83	12.55	1.94	12.87	741.50	14.09	11.56
6	1.26	1.52	338.90	1.66	25.70	1.25	4.94	129.70	1.69	62.76
7	2.23	12.59	895.30	5.72	9.62	2.57	16.97	910.70	14.53	9.39
8	2.82	9.01	438.40	1.45	19.23	1.81	3.09	307.70	10.05	27.88
9	2.12	5.99	688.00	5.93	12.60	2.19	4.13	734.70	12.86	11.86
10	5.30	8.28	332.70	.44	24.48	4.57	3.81	266.00	1.69	30.98
11	3.68	86.09	994.80	5.11	7.77	2.37	29.33	905.00	15.76	9.26
12	7.97	11.57	414.50	1.11	19.38	3.37	5.74	321.10	3.40	26.04
13	2.91	30.29	1076.90	5.82	7.83	2.30	5.88	975.80	16.17	8.94
14	3.78	7.29	318.70	1.04	25.94	3.82	3.02	236.70	1.68	35.00
15	1.95	1.38	356.10	1.08	24.35	1.24	2.38	347.90	2.60	24.96
16	4.59	0.00	959.00	2.15	9.12	2.09	12.85	792.00	2.84	10.84
17	2.79	27.83	1065.30	4.24	7.94	1.82	4.74	914.20	9.52	9.57
18	3.06	3.51	353.90	1.26	24.04	1.76	2.19	334.30	2.20	25.85
19	2.49	11.87	914.00	4.60	9.44	2.40	4.43	961.10	6.07	9.10
20	4.18	4.76	456.70	1.54	18.59	1.00	3.56	428.70	1.91	20.29
21	4.28	96.04	1044.80	5.12	7.34	2.40	6.63	1086.90	15.27	8.03
22	7.00	8.96	378.40	.99	21.40	3.80	2.79	349.70	3.09	24.24
23	3.93	12.95	1146.40	4.00	7.53	2.57	5.65	1189.10	8.19	7.36
24	2.37	6.57	746.80	6.96	11.61	3.14	4.73	764.30	15.94	11.35
25	5.28	6.65	296.60	1.14	27.41	2.65	6.37	177.30	2.13	45.35
26	3.24	1.35	665.20	1.58	13.10	2.08	24.49	220.40	.97	33.43
27	2.11	5.17	957.90	5.02	9.12	2.47	11.69	799.80	12.03	10.75
28	5.62	5.34	382.60	1.20	21.71	3.66	25.15	300.70	2.76	25.23
29	3.29	8.89	979.80	2.46	8.84	2.45	21.17	1086.30	6.43	7.87
30	2.36	8.49	782.50	7.70	11.05	2.07	11.07	456.00	10.92	18.49
31	3.43	8.75	341.00	1.39	24.27	4.21	3.98	253.10	3.82	32.55
32	3.28	4.95	621.00	1.14	13.89	2.07	3.29	192.20	2.97	43.52
BAG (ACT.)	3.59	20.58	800.00	3.58	10.52	2.94	7.86	685.10	8.05	12.56
BAG (CALC.)	3.20	15.13	721.90	2.75	11.74	2.55	8.12	673.20	8.22	12.79
33	.69	1.41	117.10	.04	73.05	.33	.98	109.70	.09	79.04
34	10.21	9.76	1388.80	.42	6.18	3.69	5.85	1316.90	.87	6.63
35	3.06	5.31	885.50	.29	9.82	1.87	3.33	669.80	.50	13.03
36	1.80	6.68	612.60	.26	14.11	1.44	4.10	566.50	.64	15.37
37	.86	2.33	428.50	.50	20.41	.94	2.18	433.10	1.36	20.19
38	.85	2.32	388.40	1.37	22.48	.96	2.42	386.50	3.08	22.56
39	1.13	6.20	431.90	.86	19.93	1.30	3.99	474.50	7.60	18.30

RESULTS EXPRESSED IN GRAMS/MILE - GRAMS/MINUTE FOR ZERO MPH

LISTING OF MODAL RESULTS ON INDIVIDUAL VEHICLES

NEWARK, N.J.

	VEH	YEAR	MAKE	MODL	CID	VEH	YEAR	MAKE	MODL	CID
	35	73	MAZD	OBX3	70	36	73	MERC	MARQ	429
MODE NO.	HC	CO	CO2	NOXC	MPG	HC	CO	CO2	NOXC	MPG
1	26.72	181.73	534.70	3.73	9.29	3.56	15.01	1153.00	9.83	7.47
2	4.76	37.89	400.60	.26	18.68	1.49	8.33	724.10	1.21	11.96
3	59.76	253.32	333.40	2.16	9.94	4.32	24.14	1322.30	5.06	6.46
4	8.39	167.60	1277.90	.88	5.65	2.72	20.44	812.50	5.50	10.40
5	7.49	36.96	305.70	2.39	23.47	2.31	10.85	632.30	7.46	13.52
6	3.29	18.03	153.00	.74	46.44	1.08	7.97	426.40	.61	20.06
7	6.17	117.54	964.40	3.37	7.59	2.42	16.45	859.40	16.13	9.92
8	3.55	36.02	279.10	1.84	25.58	2.72	18.22	457.90	1.15	17.92
9	3.72	19.00	418.50	5.35	19.29	2.59	21.43	710.70	9.27	11.79
10	1.81	19.24	444.40	.54	18.48	2.03	12.44	422.30	.83	19.80
11	5.91	67.38	587.20	5.59	12.47	3.58	49.80	984.90	11.24	8.26
12	7.34	26.29	664.90	.39	12.17	2.87	16.84	519.80	.66	15.98
13	5.95	44.12	517.30	5.49	12.48	3.36	79.39	3630.00	12.02	2.36
14	2.37	18.22	169.30	.60	43.20	2.27	15.80	490.60	.83	16.98
15	.73	4.16	377.50	.36	22.97	1.17	6.40	526.10	.62	16.44
16	2.70	59.80	635.90	1.16	12.02	4.33	32.73	1342.20	1.87	6.31
17	10.30	72.47	621.30	4.29	11.56	3.31	27.72	1030.70	8.71	8.18
18	1.76	6.44	288.90	.29	29.14	.86	7.13	485.60	.42	17.77
19	8.73	55.65	571.30	6.28	12.93	3.05	21.51	986.30	8.96	8.62
20	2.49	8.12	294.00	.31	28.21	1.06	8.63	612.60	.61	14.10
21	8.59	1 1.67	693.10	.79	10.08	3.45	22.30	1079.80	16.31	7.88
22	3.55	12.91	264.00	.73	30.03	3.19	11.25	493.50	.70	17.03
23	9.78	1 7.75	521.10	2.09	12.30	3.08	14.50	900.60	6.41	9.51
24	3.61	44.26	526.30	6.24	14.61	2.80	15.43	758.60	11.79	11.21
25	3.25	16.27	159.90	.72	45.33	3.64	12.00	376.10	.87	21.83
26	2.35	9.11	1145.50	.44	7.60	1.73	9.52	769.80	1.18	11.23
27	4.07	35.11	523.90	5.29	14.99	3.09	22.13	971.40	10.11	8.74
28	2.48	16.31	253.60	.63	30.91	2.79	10.18	461.10	.65	18.26
29	10.88	94.72	605.30	1.16	11.25	3.06	18.49	1186.00	4.90	7.25
30	5.05	21.71	544.20	1.72	13.77	3.03	14.89	776.40	14.52	10.97
31	3.09	19.53	159.20	.67	38.64	3.95	12.58	391.90	.65	20.92
32	1.32	2.10	209.80	.32	40.85	1.64	13.86	788.40	.77	10.89
BAG (ACT.)	4.89	45.58	491.20	2.70	15.35	2.75	23.41	814.80	5.33	10.32
BAG (CALC.)	4.84	49.38	516.10	2.22	14.57	2.74	21.80	876.20	5.69	9.66
33	1.73	37.22	25.00	.01	99.08	.51	6.38	126.50	.09	64.25
34	22.27	449.07	314.70	.19	8.13	5.32	48.55	1819.60	1.49	4.64
35	7.56	257.05	231.60	.27	13.69	2.64	20.81	923.20	.86	9.20
36	2.[illegible]	19.83	484.90	.16	17.03	1.61	11.94	613.10	.51	13.93
37	2.27	18.04	433.90	.27	24.32	.81	6.03	466.30	.87	18.55
38	.31	5.57	377.50	.69	22.92	1.50	14.31	423.50	1.90	19.69
39	2.36	26.09	359.70	1.57	21.74	1.44	12.46	472.40	3.52	17.87

RESULTS EXPRESSED IN GRAMS/MILE - GRAMS/MINUTE FOR ZERO MPH

LISTING OF MODAL RESULTS ON INDIVIDUAL VEHICLES

NEWARK, N.J.

MODE NO.	VEH 37 HC	YEAR 73 CO	MAKE OLDS CO2	MODL CUTL NOXC	CID 350 MPG	VEH 38 HC	YEAR 73 CO	MAKE OLDS CO2	MODL VIST NOXC	CID 350 MPG
1	7.31	23.41	1186.80	12.35	7.12	6.35	33.66	1505.60	21.53	5.62
2	.74	4.37	509.30	1.16	17.12	6.80	42.94	512.20	.48	14.76
3	5.49	31.48	1288.90	1.56	6.55	3.93	107.97	1950.90	6.06	4.16
4	2.97	5.56	696.60	3.31	12.42	4.33	45.30	1092.30	4.67	7.54
5	1.77	6.57	629.70	1.07	13.75	3.72	30.59	899.70	11.16	9.25
6	10.23	2.13	248.60	18.09	31.21	4.18	16.73	308.40	1.03	25.51
7	2.18	198.68	1299.70	.56	5.48	5.24	33.31	1125.60	22.93	7.43
8	5.43	4.39	274.90	12.30	29.68	1.89	95.40	62.40	.99	40.66
9	2.88	4.16	756.00	.53	11.51	3.58	21.30	940.70	13.88	9.01
10	.90	5.26	280.80	.64	30.40	3.23	49.03	259.70	1.02	25.58
11	2.54	31.27	782.40	5.07	10.57	2.51	25.28	1117.40	15.27	7.62
12	4.86	11.53	681.50	1.20	12.41	13.15	16.12	193.60	2.39	34.05
13	6.18	20.44	976.10	8.72	8.64	2.07	11.94	1255.50	17.53	6.93
14	4.22	18.06	175.60	1.05	40.83	4.59	12.12	345.70	1.85	23.40
15	3.18	4.26	366.80	1.45	23.14	3.50	52.65	410.20	1.18	17.61
16	3.83	7.10	1482.00	1.15	5.90	6.93	115.04	1100.90	2.98	6.81
17	3.70	12.09	1031.90	8.33	8.35	5.26	40.23	1236.10	17.56	6.74
18	2.18	1.76	179.20	.77	46.99	6.30	27.11	386.30	6.90	19.77
19	2.87	7.8[illegible]	162.50	2.17	48.25	4.32	43.21	1482.70	14.48	5.67
20	5.85	.98	118.70	.56	63.95	3.50	32.16	459.80	.71	17.02
21	4.48	63.30	927.20	6.25	8.53	5.30	33.63	1392.30	26.26	6.07
22	4.84	22.67	262.70	3.90	28.29	5.60	20.33	369.00	3.56	21.20
23	10.31	7.79	511.80	15.98	15.97	3.94	66.89	1315.70	16.45	6.19
24	3.19	29.78	635.80	6.57	12.81	3.48	23.42	1001.50	14.92	8.46
25	4.63	12.73	200.00	1.20	37.82	6.19	13.42	373.50	1.19	21.43
26	3.24	1.28	301.30	1.04	28.30	17.45	93.27	609.00	1.18	10.94
27	3.33	5.72	866.20	6.44	10.02	7.39	27.35	1050.90	26.94	7.94
28	3.87	13.30	316.90	1.24	25.35	4.63	20.02	411.00	1.86	19.41
29	4.74	5.21	977.70	4.60	8.87	5.05	73.84	1181.50	10.14	6.76
30	7.[illegible]3	18.27	559.80	8.18	12.31	5.23	33.39	1095.70	17.90	7.62
31	3.79	3.97	170.10	1.39	47.12	7.58	14.45	328.60	4.70	23.65
32	2.23	1.97	970.60	1.19	9.06	4.70	64.17	560.10	.37	13.13
BAG (ACT.)	3.75	13.74	708.10	4.98	11.97	4.53	34.86	851.50	8.49	9.64
BAG (CALC.)	3.37	17.79	659.50	4.55	12.71	4.28	30.98	878.90	10.38	9.43
33	.51	2.23	116.90	.10	72.74	.43	5.69	109.20	.13	74.27
34	5.63	20.18	1487.50	1.03	5.77	3.72	48.19	1694.00	1.78	4.98
35	1.46	7.26	958.40	.72	9.11	3.30	37.84	1110.10	1.69	7.52
36	1.07	5.12	628.70	.60	13.86	2.67	32.81	780.80	1.49	10.56
37	1.85	2.98	391.20	1.51	22.09	2.69	15.36	488.10	3.44	17.04
38	.52	3.09	408.60	2.90	21.38	.80	14.07	560.70	4.27	15.16
39	.51	4.1[illegible]	481.50	3.78	18.90	.85	13.99	655.20	7.56	13.05

RESULTS EXPRESSED IN GRAMS/MILE - GRAMS/MINUTE FOR ZERO MPH

LISTING OF MODAL RESULTS ON INDIVIDUAL VEHICLES

NEWARK, N.J.

	VEH	YEAR	MAKE	MODL	CID	VEH	YEAR	MAKE	MODL	CID
	39	73	PLYM	SATE	318	40	73	PLYM	DUST	225
MODE NO.	HC	CO	CO2	NOXC	MPG	HC	CO	CO2	NOXC	MPG
1	3.45	24.71	616.[illegible]	4.23	13.18	3.94	17.53	793.70	13.92	10.65
2	1.9[illegible]	14.01	312.80	.46	26.04	1.54	5.44	345.20	1.71	24.75
3	4.9[illegible]	36.93	753.[illegible]	.89	10.74	3.15	11.35	971.00	4.51	8.89
4	2.4[illegible]	[illegible].13	565.20	4.75	14.65	1.82	3.93	530.90	7.91	16.35
5	2.[illegible]4	11.93	450.50	6.19	18.65	1.75	3.86	466.30	12.09	18.57
6	1.64	4.23	174.40	1.18	47.76	.94	1.37	178.80	1.73	48.25
7	2.02	6.01	591.10	7.38	14.62	2.40	55.71	581.10	7.39	13.12
8	1.41	4.72	211.70	2.16	39.70	.88	6.48	234.10	3.01	35.92
9	1.46	2.63	468.10	6.59	18.61	1.49	7.62	492.60	13.97	17.43
10	1.[illegible]4	4.23	213.10	1.33	39.79	1.17	3.20	185.00	1.93	45.81
11	2.39	11.96	599.90	8.96	14.17	2.64	51.40	592.70	10.25	13.02
12	3.36	5.91	214.90	1.51	37.54	2.06	6.50	228.40	2.97	36.20
13	2.42	8.06	598.30	8.76	14.35	2.65	31.17	650.10	13.38	12.55
14	1.45	2.98	185.20	1.19	45.34	1.84	4.46	166.40	2.43	49.52
15	1.53	4.81	222.00	.49	37.86	1.13	3.74	260.90	.93	32.83
16	4.57	27.16	660.50	1.06	12.37	2.83	5.09	702.00	1.64	12.34
17	2.46	6.73	556.00	7.30	15.45	2.66	12.88	634.50	13.35	13.38
18	1.82	3.87	205.30	1.25	40.87	1.47	2.28	189.80	1.49	44.82
19	2.38	9.22	565.20	8.06	15.11	1.90	6.57	598.80	12.72	14.43
20	1.60	2.34	339.60	2.28	25.48	1.82	5.41	237.00	2.17	35.32
21	2.73	14.06	630.60	8.69	13.42	3.91	98.92	640.90	7.09	10.97
22	1.12	3.24	301.40	2.14	28.63	2.48	4.32	205.70	2.62	40.28
23	3.48	12.33	631.40	6.22	13.41	3.51	9.23	764.30	9.86	11.24
24	1.74	2.06	478.50	7.10	18.22	1.79	7.99	541.10	13.56	15.87
25	2.46	8.27	167.80	1.18	47.06	1.82	5.52	170.20	2.57	48.07
26	2.31	7.25	342.20	1.07	24.59	1.32	3.34	343.60	.77	25.14
27	2.24	5.08	511.50	7.13	16.85	2.08	8.97	574.20	13.30	14.92
28	2.16	6.17	228.10	1.31	36.28	1.74	3.50	207.30	2.08	40.65
29	3.65	11.69	623.00	5.37	13.59	2.17	3.71	738.80	7.74	11.81
30	1.94	4.18	525.20	7.97	16.50	2.41	39.69	567.90	9.87	13.91
31	2.36	3.27	149.60	1.64	54.71	1.69	6.57	193.50	3.59	42.43
32	2.39	6.18	355.40	.97	23.81	1.37	5.53	342.40	.85	24.97
BAG (ACT.)	2.23	10.34	480.10	5.40	17.63	2.05	16.38	450.60	6.44	18.38
BAG (CALC.)	2.23	8.90	479.00	4.80	17.75	1.80	15.00	435.50	7.85	19.10
33	.68	8.15	81.10	.06	92.39	.36	4.13	55.60	.14	140.36
34	8.25	93.61	983.80	.57	7.67	3.22	27.75	707.10	.78	11.66
35	3.95	47.23	502.70	.25	15.06	1.77	13.28	425.50	1.01	19.64
36	2.57	[illegible]	335.10	.18	22.68	1.45	2.31	351.70	1.91	24.66
37	1.[illegible]9	2.1	323.50	.95	25.87	1.09	1.69	272.40	2.31	31.87
38	1.[illegible]	2.11	322.50	2.98	26.47	.28	1.93	296.50	5.12	29.54
39	1.[illegible]2	3.93	376.40	4.27	23.00	.32	5.48	222.40	7.61	38.25

RESULTS EXPRESSED IN GRAMS/MILE - GRAMS/MINUTE FOR ZERO MPH

LISTING OF MODAL RESULTS ON INDIVIDUAL VEHICLES

NEWARK, N.J.

	VEH	YEAR	MAKE	MODL	CID	VEH	YEAR	MAKE	MODL	CID
	41	73	PONT	LEMA	350	42	73	PONT	CATA	400
MODE NO.	HC	CO	CO2	NOXC	MPG	HC	CO	CO2	NOXC	MPG
1	3.32	7.59	1434.20	5.42	6.09	4.04	7.70	1227.20	6.09	7.09
2	2.32	7.98	587.60	1.98	14.61	2.27	7.98	535.80	1.58	15.98
3	4.77	13.79	2116.50	3.55	4.12	6.95	7.23	1216.20	2.77	7.10
4	2.16	2.20	454.80	3.46	19.08	2.79	5.34	803.40	3.69	10.82
5	2.72	3.49	738.50	5.75	11.79	1.99	3.51	735.90	4.09	11.87
6	1.59	8.43	336.90	.86	24.99	3.14	3.66	343.40	.67	24.72
7	4.51	49.70	498.30	6.96	8.96	3.16	22.25	833.60	8.55	10.10
8	2.08	14.40	349.90	1.63	23.41	2.24	4.43	433.00	1.16	19.85
9	2.97	15.67	771.90	7.02	11.02	2.09	4.92	676.20	6.10	12.85
10	2.00	11.78	363.30	1.48	22.84	4.03	4.36	365.90	1.20	23.02
11	3.98	34.82	968.30	8.07	8.57	2.92	15.16	947.60	7.97	9.05
12	2.45	14.60	429.00	1.78	19.31	5.49	6.11	415.60	1.49	20.05
13	4.21	35.46	1059.80	8.18	7.86	3.06	11.66	1035.40	7.37	8.35
14	1.87	11.83	348.60	1.42	23.79	4.22	3.83	346.40	1.15	24.26
15	1.88	.67	461.00	1.55	18.96	2.31	2.67	428.70	.60	20.16
16	2.82	0.00	1244.00	1.98	7.08	5.71	3.93	1013.90	2.20	8.55
17	3.71	17.70	1072.30	6.60	7.98	2.97	4.83	998.30	6.03	8.74
18	1.77	11.59	356.70	.86	23.32	4.18	4.76	394.60	.65	21.37
19	3.51	11.78	986.40	6.48	8.74	2.77	5.32	899.10	6.37	9.69
20	2.12	11.95	452.60	1.27	18.56	4.47	3.87	453.70	.90	18.73
21	5.83	94.70	1115.40	6.68	6.92	3.89	10.53	1081.40	10.86	7.99
22	2.52	14.47	398.50	1.69	20.68	5.24	5.41	401.30	.99	20.81
23	3.08	7.86	1280.10	4.77	6.82	4.25	2.70	1092.80	6.23	7.99
24	3.43	16.23	819.00	6.81	10.38	2.01	6.60	819.50	7.17	10.61
25	1.79	10.23	331.60	1.37	25.12	5.01	3.50	331.20	1.07	25.17
26	2.83	0.00	597.10	1.66	14.64	3.45	1.79	618.40	1.27	14.04
27	3.48	16.51	946.10	6.28	9.03	2.42	6.27	915.00	7.46	9.52
28	2.02	8.02	415.60	1.65	20.42	4.46	3.83	414.60	1.35	20.41
29	3.50	17.10	979.50	3.76	8.72	3.80	5.40	984.70	5.72	8.83
30	3.91	26.39	884.00	6.73	9.46	2.43	10.10	814.10	7.91	10.60
31	2.20	13.40	370.90	2.07	22.25	4.39	5.55	376.30	1.36	22.25
32	2.47	0.00	566.70	2.09	15.45	3.56	3.78	591.30	1.04	14.59
BAG (ACT.)	3.23	27.63	770.50	5.39	16.77	3.42	11.45	776.50	4.78	11.02
BAG (CALC.)	3.09	17.42	730.90	4.09	11.56	3.41	7.04	746.00	4.32	11.56
33	.49	.88	137.40	.23	63.24	.71	.84	125.00	.38	69.03
34	5.59	11.99	1679.70	2.12	5.18	9.00	12.33	1551.30	4.47	5.55
35	1.76	5.43	882.70	.82	9.90	4.25	7.31	751.80	2.08	11.43
36	1.43	3.52	567.60	.59	15.36	2.62	5.44	514.20	.99	16.71
37	1.53	2.18	357.70	1.47	24.25	2.12	3.67	430.30	.87	20.04
38	1.55	5.38	392.40	1.46	21.86	1.44	3.83	464.20	1.67	18.69
39	1.86	7.82	437.50	2.70	19.48	1.32	3.80	505.70	3.33	17.21

RESULTS EXPRESSED IN GRAMS/MILE - GRAMS/MINUTE FOR ZERO MPH

LISTING OF MODAL RESULTS ON INDIVIDUAL VEHICLES

NEWARK, N.J.

	VEH	YEAR	MAKE	MODL	CID	VEH	YEAR	MAKE	MODL	CID
	43	73	TOYO	CELI	120	44	73	VOLK	SFDA	97
MODE NO.	HC	CO	CO2	NOXC	MPG	HC	CO	CO2	NOXC	MPG
1	2.28	51.30	537.70	9.33	14.20	5.25	53.05	505.80	1.19	14.65
2	.31	24.89	197.40	.27	37.37	3.81	15.53	276.90	2.29	28.32
3	1.49	77.41	486.70	3.69	14.45	6.19	110.39	713.70	1.17	9.79
4	1.01	26.89	354.90	5.78	22.17	2.27	13.38	516.50	6.98	16.29
5	.54	8.43	368.50	5.20	23.15	1.91	7.35	389.80	4.07	21.79
6	.01	3.18	162.20	.64	53.07	1.28	8.00	121.90	.67	64.07
7	1.23	16.09	461.50	11.01	18.09	3.73	12.40	360.30	5.08	22.66
8	.21	1.49	200.50	.71	43.61	.90	7.78	119.30	2.81	66.05
9	.40	2.58	362.10	8.91	24.16	1.36	5.68	344.30	4.28	24.82
10	.76	7.40	138.40	.71	58.22	1.68	13.57	117.20	1.54	61.70
11	1.29	17.56	463.70	10.37	17.93	3.91	19.32	356.60	4.92	22.22
12	1.17	7.19	170.70	.33	47.79	3.40	14.20	123.80	2.76	56.57
13	1.23	14.86	510.50	11.57	16.50	5.54	31.22	394.90	5.54	19.23
14	.76	5.24	140.10	.34	58.88	1.79	7.59	113.30	1.42	67.80
15	.64	18.44	179.70	.37	42.12	1.03	10.56	131.30	.43	58.72
16	1.23	55.45	232.50	1.39	27.43	4.53	93.98	192.50	1.55	25.03
17	1.29	18.99	479.60	9.09	17.28	8.37	46.69	365.80	7.99	19.06
18	.32	6.24	146.30	.57	56.49	2.11	12.38	138.00	.88	54.07
19	1.11	15.46	450.90	10.58	18.54	1.81	19.91	300.40	3.05	26.30
20	.43	9.30	175.50	.12	46.35	1.87	19.69	130.40	1.19	53.06
21	1.86	39.56	526.50	11.38	14.93	9.02	32.53	445.20	7.04	16.91
22	1.37	8.68	158.20	.48	50.38	2.15	13.26	133.90	2.51	54.94
23	1.50	38.45	506.70	7.90	15.52	5.16	49.55	465.20	3.66	15.87
24	.64	6.26	415.50	9.56	20.77	2.42	14.16	385.30	5.30	21.37
25	.66	3.09	140.60	.58	60.15	1.49	5.11	116.00	1.53	68.93
26	.56	28.25	234.30	2.97	31.65	1.19	14.54	189.20	.56	41.12
27	.74	5.99	444.30	10.42	19.46	5.31	20.58	361.50	5.31	21.61
28	1.11	10.02	161.30	.46	49.15	1.45	10.51	142.80	1.68	54.15
29	1.29	36.21	438.90	6.44	17.75	4.03	35.31	501.30	2.96	15.58
30	.76	6.00	431.60	11.41	20.02	4.61	13.67	416.40	5.84	19.61
31	.31	2.32	142.70	.79	60.24	2.16	6.23	116.50	2.25	66.66
32	.67	22.21	185.20	.41	39.94	1.57	14.69	208.90	.36	37.45
BAG (ACT.)	1.46	16.12	378.80	5.56	21.71	3.16	22.79	358.40	3.98	21.96
BAG (CALC.)	1.05	15.03	361.20	5.31	22.87	2.66	16.78	375.00	4.03	21.66
33	.47	14.37	30.70	.01	162.04	.56	17.49	30.00	.02	149.77
34	5.12	152.33	414.60	.02	13.24	7.23	220.96	438.70	.04	10.97
35	2.30	56.56	264.40	.13	24.61	1.24	19.31	635.20	.91	13.26
36	1.55	28.28	213.70	.32	33.74	.66	5.33	628.60	2.15	13.89
37	.79	10.13	248.50	1.28	33.25	.46	2.01	377.10	2.33	23.25
38	.43	5.08	190.40	1.49	44.43	.42	1.43	305.50	2.64	28.72
39	.53	2.88	294.60	4.87	29.51	.50	1.67	312.90	3.64	27.99

RESULTS EXPRESSED I. GRAMS/MILE - GRAMS/MINUTE FOR ZERO MPH

LISTING OF MODAL RESULTS ON INDIVIDUAL VEHICLES

NEWARK, N.J.

MODE NO.	VEH 45 HC	YEAR 73 CO	MAKE VOLK CO2	MODL SEDA NOXC	CID 97 MPG	VEH 46 HC	YEAR 72 CO	MAKE BUIC CO2	MODL CENT NOXC	CID 455 MPG
1	4.38	89.03	450.70	4.63	14.68	4.38	73.93	1188.00	18.88	6.73
2	3.42	16.74	252.30	1.04	30.66	1.82	36.69	541.70	.37	14.67
3	4.51	135.24	591.50	2.53	11.51	6.37	157.99	1426.30	10.92	5.24
4	4.76	43.25	565.70	5.57	13.68	2.44	25.32	837.10	11.55	10.03
5	3.11	20.15	393.60	5.64	20.40	1.88	8.47	782.20	13.23	11.07
6	.68	7.04	137.10	.60	59.04	1.36	5.20	369.60	.91	23.23
7	3.50	21.32	391.10	6.56	20.37	1.94	13.64	1088.70	15.85	7.95
8	1.17	11.55	148.80	1.54	52.01	.75	2.92	415.60	2.56	21.00
9	1.18	13.90	324.20	4.96	25.37	1.45	4.87	775.20	15.74	11.27
10	2.34	14.97	114.50	.86	61.02	2.36	6.78	342.10	1.43	24.64
11	3.42	32.84	367.90	5.65	20.62	1.61	13.38	1113.90	16.44	7.79
12	2.67	17.28	124.60	1.15	55.39	3.47	9.64	398.50	1.64	20.90
13	4.63	42.55	393.80	5.99	18.67	2.01	19.46	1128.00	15.86	7.62
14	2.03	13.26	109.80	1.02	64.75	2.78	4.22	324.90	1.38	26.08
15	1.68	19.98	152.60	.67	46.88	1.24	12.97	432.80	.30	19.42
16	3.66	77.21	266.10	.86	22.24	3.11	50.36	1214.20	.47	6.81
17	5.38	44.78	390.30	4.92	18.58	2.70	28.57	1062.90	17.27	7.95
18	1.71	12.18	126.60	.57	58.71	1.11	9.17	352.90	.96	23.93
19	3.33	54.24	358.70	4.17	19.53	2.27	19.79	859.10	14.44	9.89
20	2.22	17.50	137.90	.80	51.47	1.56	16.42	460.90	.85	18.05
21	6.52	45.08	443.30	4.45	16.60	1.83	28.73	1285.30	16.33	6.64
22	3.13	16.18	128.10	1.26	54.30	3.66	11.25	383.80	1.36	21.49
23	5.33	33.35	463.50	4.35	16.66	4.05	57.01	1091.10	15.40	7.44
24	2.23	20.53	370.80	6.28	21.64	1.66	8.24	909.80	14.15	9.56
25	2.02	17.19	112.30	1.07	60.91	3.44	5.03	302.90	1.21	27.59
26	2.91	29.66	218.60	.95	32.34	1.76	26.54	634.30	.79	13.02
27	2.63	29.70	375.40	5.81	20.62	2.09	15.24	969.90	15.27	8.87
28	2.54	12.89	123.10	.75	58.62	3.36	11.73	387.60	1.46	21.30
29	4.84	80.79	361.50	2.83	17.62	3.60	47.24	1141.00	11.43	7.24
30	3.01	12.91	373.60	5.50	22.00	1.68	9.58	947.70	13.48	9.17
31	1.62	10.67	113.00	1.11	65.79	3.49	5.22	361.90	1.27	23.28
32	2.72	32.07	157.00	.74	41.09	1.92	28.37	566.70	.95	14.38
BAG (ACT.)	3.22	31.84	323.80	3.79	23.11	2.27	18.92	774.90	8.51	10.93
BAG (CALC.)	2.53	21.53	367.40	3.94	21.69	2.18	18.68	801.00	8.62	10.60
33	.73	10.27	156.50	.86	50.73	.77	27.58	110.60	.11	56.75
34	4.27	128.57	500.30	.19	12.40	8.24	287.43	1369.70	.36	4.80
35	2.64	64.66	467.70	.55	15.36	3.52	114.22	781.70	.31	9.13
36	1.34	19.11	561.10	2.04	14.91	1.45	31.87	659.60	.49	12.43
37	.44	2.25	351.70	2.41	24.89	.91	3.88	448.50	1.87	19.40
38	.47	2.12	257.00	2.37	33.90	.73	2.69	493.00	2.88	17.77
39	.60	2.81	230.70	3.29	37.45	.65	3.21	557.60	7.51	15.72

RESULTS EXPRESSED IN GRAMS/MILE - GRAMS/MINUTE FOR ZERO MPH

LISTING OF MODAL RESULTS ON INDIVIDUAL VEHICLES

NEWARK, N.J.

	VEH	YEAR	MAKE	MODL	CID	VEH	YEAR	MAKE	MODL	CID
	47	72	BUIC	ELEC	455	48	72	CHEV	VEGA	140
MODE NO.	HC	CO	CO2	NOXC	MPG	HC	CO	CO2	NOXC	MPG
1	4.56	54.47	1710.40	14.44	4.90	2.83	48.31	557.20	6.42	13.82
2	4.66	66.26	462.10	.81	15.28	.82	3.87	259.90	.53	33.05
3	6.85	123.03	1765.10	8.37	4.48	4.49	53.85	611.80	4.08	12.49
4	1.66	23.16	1068.10	9.79	8.00	1.87	28.11	497.40	3.18	16.21
5	1.45	7.64	795.20	3.34	10.93	1.17	21.01	408.30	5.66	19.94
6	1.63	10.95	284.80	8.18	28.89	.47	3.36	140.50	1.34	60.27
7	2.94	15.93	1087.10	15.21	7.91	1.86	37.37	410.40	6.40	18.68
8	1.37	5.14	147.00	1.77	55.67	.63	5.17	137.50	1.24	60.12
9	1.79	6.04	993.50	12.43	8.80	.98	5.30	321.00	8.19	26.70
10	3.71	21.84	297.90	1.25	25.80	1.53	3.39	100.10	.80	80.48
11	2.29	20.58	1221.90	15.13	7.04	2.55	53.10	356.90	5.66	19.79
12	3.56	24.57	305.50	1.15	24.97	1.86	5.32	122.50	1.03	64.90
13	2.25	16.24	1049.60	23.85	8.20	3.11	71.62	404.20	5.74	16.85
14	2.84	16.39	292.90	3.69	27.09	1.69	4.17	107.00	.83	74.64
15	3.[illegible]8	34.26	354.80	.94	21.21	1.13	4.29	140.00	.77	59.04
16	12.89	169.34	942.50	3.16	7.12	2.51	12.58	251.40	2.37	31.80
17	3.25	21.13	1152.30	14.96	7.42	2.85	49.28	440.60	6.96	16.84
18	2.25	19.08	310.80	1.75	25.51	.70	.84	98.50	.37	86.98
19	2.10	20.37	1207.10	12.28	7.12	1.42	22.69	395.00	7.45	20.40
20	3.18	38.59	378.10	.88	19.77	2.36	8.01	141.70	.67	54.86
21	3.62	42.22	1368.40	15.12	6.14	3.72	84.88	429.20	5.54	15.45
22	4.[illegible]0	29.32	332.30	1.59	22.70	2.07	10.23	100.20	.61	72.25
23	5.12	47.67	1391.80	14.74	5.98	3.75	52.45	468.20	5.33	15.78
24	2.66	8.37	909.10	14.23	9.54	1.49	26.10	343.00	7.40	22.83
25	2.78	12.44	282.60	.50	28.54	1.37	4.73	114.40	1.04	70.34
26	4.67	40.32	557.40	1.13	13.96	1.08	2.46	180.40	.13	47.29
27	2.61	15.10	1029.40	14.31	8.36	1.58	24.81	391.10	8.07	20.40
28	3.25	23.7[illegible]	367.70	.73	24.98	1.42	6.11	117.00	.75	67.70
29	4.5[illegible]	37.64	1224.[illegible]	5.71	6.84	3.13	53.39	548.50	3.81	13.82
30	2.39	7.23	948.50	10.47	9.17	1.54	25.02	438.90	7.94	18.37
31	3.12	12.48	294.50	2.66	27.39	.87	3.80	114.70	1.02	71.91
32	4.85	48.74	510.60	52.26	14.73	1.83	7.13	141.10	.78	56.13
BAG (ACT.)	3.19	25.93	790.10	10.52	10.55	2.14	24.60	317.60	4.39	24.45
BAG (CALC.)	3.[illegible]5	23.79	797.89	9.48	10.50	1.68	22.13	335.80	4.33	23.61
33	1.15	31.90	100.00	.18	57.72	.24	4.96	28.00	.03	242.79
34	13.81	324.43	1233.20	1.12	4.97	2.70	45.97	526.10	1.09	14.62
35	6.24	145.64	682.70	.70	9.53	.32	2.65	517.40	.61	16.98
36	1.62	11.88	794.70	1.58	10.78	.21	3.81	507.00	.93	17.28
37	2.15	7.03	426.20	2.22	20.26	.64	13.25	335.90	1.04	24.74
38	1.26	2.99	472.30	5.49	18.45	.81	8.02	237.70	3.07	35.10
39	1.22	3.45	531.40	9.32	15.42	.73	6.00	218.30	4.32	38.58

RESULTS EXPRESSED IN GRAMS/MILE - GRAMS/MINUTE FOR ZERO MPH

LISTING OF MODAL RESULTS ON INDIVIDUAL VEHICLES

NEWARK, N.J.

MODE NO.	VEH 49 HC	YEAR 72 CO	MAKE CHEV CO2	MODL NOVA NOXC	CID 307 MPG	VEH 50 HC	YEAR 72 CO	MAKE CHEV CO2	MODL NOVA NOXC	CID 250 MPG
1	3.83	10.06	995.90	8.75	8.67	2.56	66.32	842.20	3.70	9.30
2	4.47	7.89	458.10	1.63	18.31	1.17	2.18	342.90	1.37	25.36
3	6.05	11.26	953.60	4.63	8.96	4.06	115.11	975.70	.93	7.59
4	1.55	4.58	692.20	3.97	12.60	.50	2.26	572.70	1.35	15.36
5	1.61	5.79	733.70	4.54	11.90	1.05	5.79	479.90	2.98	18.03
6	.82	3.23	307.10	.95	28.20	1.15	1.86	211.10	1.32	40.77
7	2.36	9.26	860.60	9.74	10.06	1.55	30.11	671.00	4.12	12.27
8	1.15	5.51	398.40	1.88	21.61	.41	2.62	271.20	3.54	32.09
9	1.30	2.43	788.10	5.96	11.15	1.16	1.78	519.90	4.82	16.86
10	4.56	6.01	336.90	1.36	24.60	2.92	3.08	223.70	1.88	37.32
11	2.67	21.71	850.10	8.02	9.94	1.41	15.64	668.30	1.93	12.73
12	5.71	8.46	396.40	1.46	20.75	3.66	3.05	240.80	2.53	34.51
13	2.50	9.66	922.20	7.46	9.39	1.55	28.87	725.30	5.72	11.44
14	3.08	6.24	303.10	1.55	27.51	2.81	1.62	207.80	2.46	40.48
15	3.38	8.29	383.50	.95	21.79	1.34	1.20	304.10	1.16	28.61
16	4.25	9.15	1032.90	1.12	8.37	1.15	4.15	618.30	1.23	14.12
17	22.43	8.59	882.10	5.92	9.18	1.53	32.42	708.80	4.34	11.61
18	3.32	3.61	346.50	1.18	24.47	1.90	.45	242.50	1.51	35.61
19	2.33	8.39	843.40	4.94	10.27	1.03	10.70	747.40	3.35	11.56
20	6.02	4.75	395.00	1.30	21.05	1.87	.37	292.60	1.45	29.67
21	3.29	26.45	955.10	7.30	8.81	2.86	86.64	732.10	4.01	10.12
22	5.78	7.58	356.70	1.53	22.94	73.06	1.71	238.60	2.46	18.76
23	4.32	11.58	936.40	5.37	9.17	2.21	10.87	694.10	2.89	12.36
24	1.27	7.51	814.70	4.47	10.69	.85	7.58	523.60	3.89	16.49
25	2.62	5.07	305.40	1.50	27.59	2.48	2.95	205.20	1.99	40.77
26	3.91	8.41	521.10	1.61	15.23	3.38	1.46	313.90	.39	27.15
27	1.76	8.68	844.60	4.45	10.27	1.94	2.67	662.10	10.58	13.20
28	5.38	7.90	346.40	1.18	23.61	3.22	8.93	216.70	1.81	36.84
29	4.35	11.36	864.50	3.36	9.91	2.21	42.04	727.50	1.81	11.09
30	1.46	7.65	851.10	3.71	10.23	1.09	12.64	647.20	3.09	13.24
31	2.19	5.48	279.50	1.80	30.08	1.90	3.56	219.90	2.69	38.34
32	5.54	11.94	458.70	1.06	17.93	1.48	5.56	358.30	.30	23.88
BAG (ACT.)	3.29	8.71	696.30	4.04	12.32	1.91	15.37	511.80	4.08	16.38
BAG (CALC.)	3.19	8.11	663.50	5.42	12.93	1.77	14.06	516.80	3.72	16.30
33	.56	1.40	89.00	.07	95.46	.48	17.11	38.00	.03	133.65
34	6.36	11.35	1065.50	.65	8.05	5.18	193.13	540.40	.20	10.32
35	2.21	5.54	893.90	1.17	9.76	.45	2.54	451.10	.53	19.44
36	1.72	3.33	595.30	.82	14.65	.18	2.15	626.40	.78	14.08
37	2.09	2.20	355.60	2.51	24.27	.63	1.62	308.90	1.24	28.32
38	2.14	3.71	372.50	5.75	23.05	.82	2.34	317.70	2.40	27.40
39	1.65	3.39	418.70	7.30	23.68	.50	2.21	365.20	4.13	23.97

RESULTS EXPRESSED IN GRAMS/MILE - GRAMS/MINUTE FOR ZERO MPH

LISTING OF MODAL RESULTS ON INDIVIDUAL VEHICLES

NEWARK, N.J.

MODE NO.	VEH 51 HC	YEAR 72 CO	MAKE CHEV CO2	MODL IMPA NOXC	CID 350 MPG	VEH 52 HC	YEAR 72 CO	MAKE CHEV CO2	MODL BROG NOXC	CID 350 MPG
1	4.24	1[illegible]0.57	1168.40	11.41	6.62	6.03	36.59	1213.90	5.89	6.88
2	2.95	53.36	422.90	.40	17.20	2.16	8.37	518.20	3.55	16.49
3	7.13	189.29	1289.20	4.30	5.52	7.44	60.99	1259.70	4.16	6.44
4	3.[illegible]1	50.07	854.60	6.39	9.41	3.80	18.37	838.50	4.05	10.09
5	1.95	19.62	701.70	5.73	12.01	3.07	13.23	798.90	6.46	10.70
6	1.72	26.55	274.20	.51	27.62	2.55	5.07	304.90	4.26	27.65
7	3.21	68.07	850.40	12.54	9.17	5.00	53.13	913.40	7.52	8.76
8	2.66	23.07	232.80	.38	31.98	2.13	8.33	380.40	7.43	22.17
9	1.6[illegible]	17.41	671.10	9.41	12.62	3.00	10.85	747.20	9.34	11.47
10	1.74	25.46	274.30	.98	27.62	4.96	8.60	261.20	3.98	30.56
11	2.99	31.80	916.50	11.1[illegible]	9.09	5.05	46.99	1029.60	11.95	7.93
12	2.21	31.49	395.70	1.06	19.63	6.46	12.23	342.40	6.46	23.23
13	2.83	29.53	969.70	.85	8.66	4.86	40.24	1036.20	13.68	7.96
14	1.66	24.96	268.50	1.12	26.65	4.19	6.76	252.80	4.43	32.07
15	2.86	17.89	505.30	1.12	16.36	2.91	1.13	557.30	6.55	15.62
16	7.21	155.92	1078.30	2.06	6.59	8.35	4.04	1657.80	15.27	5.25
17	2.68	37.98	1033.20	8.13	8.06	4.47	18.87	1056.10	11.90	8.07
18	1.94	29.43	367.60	1.91	21.13	1.35	5.49	393.50	4.10	21.84
19	2.38	17.06	958.50	7.60	8.94	1.19	13.86	924.80	11.31	9.34
20	2.24	43.54	451.30	.17	16.85	5.22	17.79	356.00	3.94	22.16
21	3.74	55.42	1071.10	9.26	7.59	6.76	109.49	1027.30	9.97	7.27
22	1.95	34.37	320.50	.90	23.31	4.69	11.26	348.10	4.01	23.32
23	5.[illegible]3	1[illegible]8.57	1167.90	5.12	6.55	5.32	19.29	1015.40	10.33	8.35
24	1.65	15.68	752.60	8.32	11.34	3.24	15.51	838.70	12.37	10.16
25	1.64	20.94	277.40	1.49	28.13	1.35	7.27	368.60	5.09	23.09
26	3.13	20.99	497.40	4.26	16.43	3.90	3.73	778.10	7.11	11.15
27	2.17	19.51	882.60	7.09	9.65	3.88	22.57	947.70	14.44	8.92
28	2.[illegible]3	32.73	318.10	1.11	23.61	4.26	12.20	326.40	4.06	24.72
29	3.83	79.27	1055.60	4.11	7.44	5.14	31.26	998.30	10.42	8.34
30	2.33	19.66	821.[illegible]	6.67	10.33	3.70	32.53	863.80	11.04	9.58
31	1.99	23.94	330.80	2.55	23.68	4.36	12.11	328.70	6.52	24.55
32	3.35	33.57	542.70	4.37	14.64	4.51	5.36	818.10	10.80	10.56
BAG (ACT.)	2.75	34.07	657.60	5.49	12.20	4.03	22.90	1115.50	10.15	7.62
BAG (CALC.)	2.89	38.4[illegible]	668.70	5.22	12.02	4.08	20.10	727.70	9.53	11.49
33	.96	29.92	84.90	.05	65.76	.64	7.17	82.10	.04	93.04
34	11.[illegible]3	327.96	1172.70	.46	5.15	6.44	57.22	1024.60	.32	7.82
35	5.32	1[illegible].84	672.30	.38	9.58	1.90	10.93	806.00	.68	10.70
36	3.46	40.79	479.20	.34	14.02	1.39	4.07	595.00	.82	14.65
37	1.98	17.72	354.[illegible]	1.7	22.87	1.77	2.13	400.00	3.09	21.70
38	1.91	14.14	358.3[illegible]	3.63	22.38	2.17	6.28	436.80	6.12	19.57
39	1.78	13.5	422.4[illegible]	5.94	19.97	2.03	5.33	490.30	10.52	17.57

RESULTS EXPRESSED IN GRAMS/MILE - GRAMS/MINUTE FOR ZERO MPH

LISTING OF MODAL RESULTS ON INDIVIDUAL VEHICLES

NEWARK, N.J.

MODE NO.	VEH 53 HC	YEAR 72 CO	MAKE CHEV CO2	MODL IMPA NOXC	CID 350 MPG	VEH 54 HC	YEAR 72 CO	MAKE CHEV CO2	MODL IMPA NOXC	CID 350 MPG
1	4.13	52.59	1161.80	9.49	6.97	4.44	51.70	1120.40	9.53	7.30
2	2.55	12.94	392.90	.54	21.07	2.08	20.22	514.30	2.18	16.06
3	5.12	119.67	1223.70	2.39	6.22	6.81	92.16	1249.30	2.43	6.27
4	2.54	26.41	862.40	5.48	9.73	3.55	59.14	797.30	3.61	9.85
5	1.73	14.18	718.90	7.15	11.69	1.96	10.48	675.40	6.38	12.71
6	2.36	9.77	221.40	1.76	35.34	1.15	7.77	288.60	2.54	29.15
7	3.12	28.13	405.30	13.20	9.25	3.64	33.26	621.40	10.62	12.95
8	1.38	12.60	282.20	2.69	28.97	1.91	10.71	272.40	2.86	30.06
9	2.15	13.34	681.70	11.38	12.51	2.25	9.64	636.00	10.07	13.48
10	3.86	14.14	225.10	1.46	34.19	1.85	15.77	260.40	2.16	30.49
11	2.75	25.70	893.50	11.72	9.42	3.13	25.99	811.60	10.25	10.29
12	5.61	13.77	243.20	1.54	31.40	2.01	19.13	328.90	2.97	24.29
13	2.98	21.83	973.70	12.15	8.73	3.21	25.34	935.80	10.15	9.00
14	3.69	11.13	203.40	1.50	38.16	1.25	12.89	273.60	2.40	29.80
15	1.69	6.27	257.10	.45	32.59	2.12	10.89	369.40	1.53	22.57
16	4.18	34.54	692.40	1.07	11.68	5.03	21.22	1267.90	3.48	6.74
17	2.81	25.33	1024.60	9.97	8.27	3.25	25.01	956.10	7.68	8.83
18	3.42	5.37	236.70	.63	34.67	1.38	10.66	375.00	1.25	22.41
19	2.59	23.57	918.00	8.97	9.21	2.99	19.85	899.00	7.16	9.45
20	2.[illegible]9	9.44	322.80	.85	25.78	1.40	16.49	458.50	1.59	18.16
21	3.53	36.00	1037.30	13.16	8.03	4.54	54.89	1051.70	9.98	7.70
22	4.74	12.22	240.20	1.21	32.34	1.29	13.42	354.90	2.22	23.35
23	3.98	47.14	1107.50	7.65	7.43	4.36	56.34	1137.10	6.62	7.16
24	2.40	21.20	780.10	9.80	10.81	2.53	12.00	717.00	7.39	11.93
25	4.32	12.73	172.20	1.06	43.30	1.22	11.41	289.30	3.01	28.53
26	2.51	9.08	466.10	1.22	18.18	2.98	8.92	607.70	3.36	14.06
27	2.53	26.37	854.50	9.23	9.82	2.36	14.22	849.90	7.08	10.09
28	4.[illegible]5	13.66	238.10	1.11	32.58	1.36	10.81	349.10	2.56	23.96
29	3.74	43.21	1020.20	6.30	8.07	4.48	73.72	1049.70	4.29	7.52
30	2.48	22.22	821.50	10.54	10.27	2.72	12.03	809.30	7.42	10.61
31	2.83	9.83	204.00	1.89	38.86	1.18	11.40	245.10	3.27	33.27
32	3.81	23.87	375.70	.80	20.87	3.02	8.83	630.40	4.68	13.57
BAG (ACT.)	3.20	25.33	625.90	6.40	13.13	2.58	24.27	655.60	6.29	12.64
BAG (CALC.)	3.[illegible]3	22.33	640.60	6.66	13.01	2.72	22.27	655.20	6.04	12.70
33	.48	6.46	72.40	.07	105.57	.84	13.36	116.20	.15	63.46
34	5.52	63.93	1101.70	.57	7.28	9.09	120.50	1434.90	1.56	5.37
35	1.99	17.30	891.00	1.07	9.60	3.65	49.68	826.90	.86	9.68
36	1.45	13.23	536.70	.53	15.79	2.60	34.61	527.40	.58	15.04
37	1.12	2.68	360.50	1.94	24.09	1.72	5.60	370.30	2.44	23.08
38	1.35	8.34	378.10	4.03	22.44	1.78	8.00	386.40	4.55	21.94
39	1.58	13.63	427.80	6.56	19.54	1.52	10.98	401.70	5.52	20.94

RESULTS EXPRESSED IN GRAMS/MILE - GRAMS/MINUTE FOR ZERO MPH

APPENDIX D

LISTING OF MODAL RESULTS ON INDIVIDUAL VEHICLES

NEWARK, N.J.

	VEH	YEAR	MAKE	MODL	CID	VEH	YEAR	MAKE	MODL	CID
	55	72	DATS	0510	97	56	72	DODG	CHAL	318
MODE NO.	HC	CO	CO2	NOXC	MPG	HC	CO	CO2	NOXC	MPG
1	2.63	35.61	564.00	1.12	14.13	2.25	32.23	845.40	4.12	9.83
2	1.03	3.76	294.40	.41	29.24	2.08	12.38	480.50	1.04	17.52
3	5.13	58.43	645.90	2.26	11.53	4.15	63.47	959.70	3.69	8.27
4	1.63	3.51	519.60	4.89	16.74	1.83	8.54	561.80	3.21	15.28
5	.88	1.72	365.40	3.59	23.93	1.53	2.39	524.70	3.47	16.64
6	.34	.64	232.10	.23	37.90	.99	1.92	298.00	.64	29.18
7	1.22	8.79	425.70	6.20	20.02	1.65	7.09	690.80	5.25	12.55
8	.33	1.07	153.20	.60	56.92	.92	2.78	283.20	2.16	30.55
9	.59	3.50	340.40	3.81	25.50	.97	3.35	551.90	3.52	15.84
10	1.18	4.13	132.80	.49	62.05	.62	1.26	290.10	1.02	30.18
11	1.68	17.48	382.30	4.95	21.38	1.52	5.12	677.70	5.37	12.85
12	1.98	5.88	136.60	.52	58.34	1.07	2.64	357.50	1.54	24.31
13	1.45	14.70	444.70	4.81	18.79	1.62	6.06	704.20	5.24	12.35
14	.95	2.97	123.20	.49	67.81	.90	1.59	280.50	1.19	31.05
15	.82	3.98	207.70	8.44	40.98	1.22	.89	404.10	.60	21.68
16	.83	9.79	486.10	.37	17.61	4.69	44.13	1275.20	1.13	6.53
17	1.65	20.30	482.20	3.86	17.09	2.08	8.76	709.20	4.20	12.17
18	.62	1.21	196.10	3.45	44.40	.74	2.87	310.50	.81	27.97
19	.97	7.52	441.10	4.51	19.46	2.10	8.78	623.40	3.39	13.78
20	1.35	5.28	211.50	.25	39.61	1.29	3.55	401.80	1.13	21.57
21	2.35	24.30	473.70	7.63	17.09	1.92	9.78	736.70	5.67	11.71
22	2.13	5.47	136.80	.53	58.33	.87	1.59	335.60	1.66	26.04
23	3.38	40.83	533.60	4.93	14.59	2.77	15.46	682.30	2.48	12.41
24	.96	7.27	389.20	4.16	21.99	1.20	1.25	575.10	3.76	15.28
25	.87	4.19	112.40	.35	72.90	.77	1.66	248.90	1.18	34.95
26	1.18	7.79	291.00	.29	28.91	1.83	5.15	566.30	1.67	15.30
27	1.34	10.77	405.60	4.02	20.84	1.46	3.70	595.50	4.03	14.65
28	1.92	6.57	131.70	.48	59.92	.88	4.27	330.70	3.25	26.09
29	2.08	29.36	507.70	4.09	15.84	2.68	15.10	666.00	3.08	12.71
30	.83	4.96	408.30	5.27	21.20	1.37	2.87	590.80	4.25	14.80
31	.62	2.30	143.10	.62	59.69	.86	2.14	277.80	1.62	31.26
32	2.13	2.79	242.40	8.19	35.01	1.64	4.35	521.30	1.39	16.64
BAG (ACT.)	1.66	9.72	350.90	3.15	23.89	1.91	8.46	538.90	3.33	15.90
BAG (CALC.)	1.15	8.79	353.30	3.03	23.96	1.71	7.07	565.80	2.97	15.24
33	.32	6.72	33.00	.01	199.11	.89	10.89	112.40	.10	67.07
34	2.95	46.99	502.50	.43	15.16	10.16	117.83	1345.00	1.07	5.68
35	.56	4.32	543.10	.43	16.09	3.34	21.39	800.30	.73	10.51
36	.57	4.15	481.20	2.32	18.13	2.02	5.85	575.10	.67	15.03
37	.33	2.62	327.10	2.21	26.71	1.38	1.80	337.10	1.15	25.78
38	.15	2.11	266.70	1.13	32.81	1.26	2.52	340.30	1.32	25.49
39	.34	1.53	201.80	2.52	43.24	.93	2.93	386.30	2.40	22.53

RESULTS EXPRESSED IN GRAMS/MILE - GRAMS/MINUTE FOR ZERO MPH

LISTING OF MODAL RESULTS ON INDIVIDUAL VEHICLES

NEWARK, N.J.

	VEH	YEAR	MAKE	MODL	CID	VEH	YEAR	MAKE	MODL	CID
	57	72	DODG	POLA	360	58	72	FORD	PINT	122
MODE NO.	HC	CO	CO2	NOXC	MPG	HC	CO	CO2	NOXC	MPG
1	9.78	177.09	961.80	15.76	6.98	1.93	9.68	529.80	5.04	16.10
2	10.33	214.17	300.00	.14	13.26	1.68	.41	246.00	1.60	35.22
3	16.48	426.31	901.30	.52	5.47	2.72	5.11	649.10	3.45	13.33
4	6.66	175.24	790.80	3.85	8.16	1.97	3.59	391.70	3.56	21.99
5	4.25	68.51	587.30	4.09	12.53	1.95	9.26	345.30	3.58	24.25
6	3.92	74.25	232.90	.50	24.52	1.32	1.97	190.10	1.86	44.97
7	4.31	72.43	844.00	6.30	9.14	2.88	71.21	336.30	3.71	19.41
8	3.35	32.41	189.40	1.01	35.37	1.55	7.03	190.70	2.50	42.95
9	3.72	39.12	657.10	5.89	12.15	2.19	29.14	353.80	3.84	21.83
10	4.97	40.96	220.10	.81	23.43	1.39	4.18	159.80	1.33	51.97
11	4.55	70.66	816.00	6.60	9.43	2.84	69.00	425.30	3.41	16.35
12	14.64	89.33	219.30	.65	21.85	1.81	4.65	182.30	1.68	45.43
13	5.42	80.32	962.00	7.04	8.03	2.70	56.04	465.30	3.96	15.79
14	5.50	78.01	209.00	1.48	25.43	1.41	2.37	163.00	1.84	51.84
15	5.32	172.83	336.80	.19	14.19	1.43	.94	188.50	1.13	45.63
16	15.59	394.46	639.30	.64	6.78	2.51	2.28	435.40	.70	19.86
17	5.16	86.96	803.50	5.34	9.28	2.40	19.55	526.10	4.97	15.72
18	7.28	84.26	213.80	.24	24.03	1.13	.83	165.00	1.07	52.24
19	5.38	83.35	802.80	5.69	9.33	2.12	14.73	437.50	4.63	18.99
20	3.91	114.04	259.90	1.40	19.65	1.47	3.49	215.70	1.67	39.30
21	5.05	81.42	984.80	6.73	7.86	2.80	66.82	498.70	4.19	14.49
22	9.14	86.95	311.20	1.41	18.61	1.55	2.68	185.10	1.59	45.70
23	7.96	177.45	638.90	2.26	9.41	1.88	.37	587.20	4.76	14.95
24	3.84	50.43	736.80	5.46	10.72	2.36	38.49	363.00	3.63	20.59
25	6.76	54.44	204.40	.96	28.50	1.33	2.44	148.00	1.50	56.87
26	7.69	190.42	368.20	.19	12.83	2.04	2.13	291.90	1.36	29.42
27	4.39	59.00	771.70	5.27	10.10	2.61	48.92	424.60	4.39	17.41
28	5.99	40.50	213.50	.62	23.69	1.47	15.00	185.70	1.76	41.49
29	6.92	140.61	853.30	4.06	8.10	2.04	25.66	541.20	4.64	15.09
30	3.90	52.44	714.40	5.23	10.97	2.70	55.42	392.40	4.06	18.19
31	7.41	21.45	172.50	.85	38.64	1.54	13.23	151.90	1.95	49.98
32	7.38	175.96	286.00	.13	15.15	1.99	27.32	259.50	.78	28.75
BAG (ACT.)	6.61	1 8.47	580.90	3.43	11.49	2.10	30.13	354.30	3.58	21.74
BAG (CALC.)	4.89	118.69	544.60	3.32	11.89	2.11	19.45	350.40	3.69	22.90
33	1.26	61.69	71.40	.01	51.50	.06	.27	52.40	.06	167.42
34	13.30	736.20	899.00	.16	4.23	.40	2.73	629.30	.27	13.98
35	5.72	422.70	518.60	.12	7.39	.41	1.91	424.40	.44	20.70
36	3.00	294.18	369.20	.13	10.55	.95	2.56	322.10	.63	26.97
37	1.28	161.05	236.30	.24	17.99	1.49	1.23	215.40	1.77	39.97
38	.82	69.08	274.60	1.63	23.01	1.24	1.91	225.60	2.87	38.17
39	.65	46.18	326.50	2.50	22.13	1.26	2.49	233.80	4.32	36.72

RESULTS EXPRESSED IN GRAMS/MILE - GRAMS/MINUTE FOR ZERO MPH

LISTING OF MODAL RESULTS ON INDIVIDUAL VEHICLES

NEWARK, N.J.

	VEH	YEAR	MAKE	MODL	CID	VEH	YEAR	MAKE	MODL	CID
	59	72	FORD	TORI	302	60	72	FORD	TORI	351
MODE NO.	HC	CO	CO2	NOXC	MPG	HC	CO	CO2	NOXC	MPG
1	8.77	149.51	710.30	1.35	9.12	3.48	31.07	862.00	11.17	9.63
2	5.11	79.92	419.60	.34	15.81	1.70	24.51	455.50	1.06	17.77
3	11.69	256.77	903.80	.90	6.60	4.22	57.79	1116.10	3.94	7.27
4	5.85	1[illegible]7.82	655.90	.51	10.52	2.23	10.37	657.10	7.99	13.04
5	3.92	71.08	622.80	.76	11.88	2.40	7.35	594.20	9.93	14.47
6	3.34	30.63	256.20	.12	28.18	2.53	5.60	274.80	1.95	30.43
7	6.04	57.85	756.40	2.66	10.24	2.71	7.88	810.90	14.66	10.67
8	2.41	36.04	225.70	.16	30.61	2.49	7.16	320.20	5.04	26.15
9	5.[illegible]	62.84	613.50	1.23	12.19	2.62	10.13	662.20	12.62	12.93
10	8.96	39.35	184.50	.16	32.30	3.59	13.47	300.40	3.17	26.66
11	7.29	82.67	764.50	2.29	9.67	2.98	10.53	823.00	14.81	10.45
12	9.93	50.29	224.30	.37	26.51	5.11	15.57	353.90	4.38	22.49
13	7.30	91.94	744.80	1.93	9.73	3.28	15.52	821.80	15.76	10.36
14	6.39	35.29	197.20	.20	32.52	3.42	9.97	293.70	3.78	27.72
15	3.3[illegible]	45.89	322.60	.3[illegible]	21.90	1.37	11.04	372.50	.55	22.52
16	8.33	165.96	460.70	1.02	11.87	3.26	68.58	871.00	1.50	8.97
17	7.48	123.95	775.10	1.35	8.93	3.86	26.24	850.20	13.02	9.82
18	7.60	42.25	184.40	.12	32.29	2.68	9.47	321.90	1.72	25.70
19	6.90	111.20	711.50	1.25	9.77	3.12	13.73	774.20	12.03	11.02
20	6.93	52.4[illegible]	253.70	.28	24.79	3.54	12.00	372.60	2.27	22.04
21	7.75	87.90	969.90	3.25	7.85	3.24	15.70	984.20	15.87	8.71
22	10.45	43.63	199.80	.30	29.44	4.41	15.41	362.70	3.96	22.14
23	17.41	183.84	945.10	.73	6.88	3.94	26.76	890.20	12.53	9.39
24	4.91	68.77	654.60	1.35	11.40	2.70	8.50	721.50	13.28	11.94
25	6.41	36.04	195.60	.24	32.56	4.52	9.43	301.80	4.09	26.82
26	6.12	64.92	419.40	.38	16.42	2.03	14.70	472.90	.83	17.66
27	6.[illegible]5	84.95	709.80	1.65	10.29	3.18	11.78	779.00	13.53	10.99
28	7.77	42.50	218.80	.23	28.61	4.03	13.86	348.30	3.63	23.18
29	8.83	161.31	879.40	.85	7.65	3.72	24.60	858.90	10.19	9.76
30	5.54	60.32	689.60	1.98	11.07	2.63	7.48	749.80	13.42	11.53
31	5.65	35.52	179.80	.25	35.01	4.07	7.55	314.00	4.06	26.20
32	6.17	21.03	531.40	.22	13.08	1.77	10.78	494.80	1.11	17.16
BAG (ACT.)	6.49	83.18	549.00	1.02	12.67	3.27	19.17	645.40	9.87	12.94
BAG (CALC.)	5.66	74.57	543.90	1.18	13.07	3.00	14.33	639.70	8.38	13.21
33	.86	23.4[illegible]	55.10	.05	93.82	.50	12.26	96.10	.09	75.89
34	8.97	272.39	724.80	.62	7.51	4.91	122.20	1184.20	.91	6.38
35	3.5[illegible]	98.99	753.90	.59	9.64	.62	6.57	962.80	.95	9.10
36	3.[illegible]3	85.14	392.[illegible]	.35	16.58	.44	4.09	644.40	.77	13.61
37	1.67	28.61	360.1[illegible]	.7[illegible]	21.63	.57	2.71	386.80	1.06	22.59
38	.81	23.11	285.2[illegible]	.74	27.40	1.06	4.43	350.50	3.52	24.60
39	1.14	53.08	365.7[illegible]	1.0[illegible]	19.60	1.58	7.56	421.10	6.67	20.26

RESULTS EXPRESSED IN GRAMS/MILE - GRAMS/MINUTE FOR ZERO MPH

LISTING OF MODAL RESULTS ON INDIVIDUAL VEHICLES

NEWARK, N.J.

MODE NO.	VEH 61 HC	YEAR 72 CO	MAKE FORD CO2	MODL BROU NOXC	CID 351 MPG	VEH 62 HC	YEAR 72 CO	MAKE FORD CO2	MODL STAW NOXC	CID 351 MPG
1	2.51	10.72	1102.70	9.41	7.87	6.88	87.61	1398.20	10.21	5.70
2	1.68	10.14	512.70	.74	16.62	2.33	34.78	600.40	3.23	13.40
3	3.44	123.60	1284.70	4.98	5.96	8.19	162.82	1650.00	5.06	4.59
4	1.13	3.89	848.00	8.73	10.35	2.94	31.68	957.50	3.23	8.73
5	2.21	3.71	590.20	13.83	14.72	2.07	9.76	804.00	3.90	10.75
6	2.18	2.47	327.60	1.14	26.23	1.05	12.89	422.30	3.57	19.91
7	3.36	41.28	776.30	12.20	10.43	2.54	14.31	854.20	8.33	10.03
8	2.15	7.74	375.20	2.59	22.52	1.17	13.18	408.30	5.73	20.51
9	1.75	5.03	644.40	15.85	13.49	2.42	15.30	662.30	5.62	12.79
10	3.51	9.96	337.00	2.08	24.40	4.63	21.86	388.60	3.08	20.28
11	3.15	14.34	887.20	16.93	9.65	3.21	21.65	1077.80	10.70	7.91
12	4.75	11.42	390.50	7.13	20.96	6.72	6.07	451.40	4.37	18.40
13	3.25	9.11	990.50	18.56	8.74	3.80	23.50	1163.00	12.06	7.32
14	3.46	7.07	307.10	2.39	26.96	3.13	13.77	378.50	3.30	21.64
15	1.55	1.27	379.90	.55	22.95	2.04	14.65	463.10	3.11	18.02
16	2.59	2.14	922.00	.74	9.51	5.60	53.22	1009.20	1.75	7.99
17	2.84	7.25	944.10	14.83	9.20	4.49	37.45	1115.30	8.18	7.47
18	2.72	.51	332.60	1.35	25.95	3.98	18.51	384.70	2.54	20.81
19	2.86	8.28	848.40	16.37	10.20	3.44	24.47	1033.90	4.64	8.19
20	4.61	6.74	405.10	2.08	20.63	6.09	27.82	453.40	2.51	17.19
21	3.63	39.92	1610.40	19.61	8.18	4.71	59.81	1155.70	7.86	7.02
22	4.56	6.69	340.40	2.23	24.29	5.17	20.70	354.20	2.85	22.02
23	2.24	5.74	1162.30	8.52	7.53	5.01	56.45	1170.00	4.98	6.96
24	2.99	18.20	733.70	17.46	11.50	2.05	11.32	847.50	5.35	10.18
25	3.47	5.30	310.20	1.12	26.93	4.23	15.08	329.90	2.84	24.18
26	2.00	.70	565.20	.57	15.50	2.58	24.72	626.50	3.44	13.18
27	3.21	8.00	881.50	17.01	9.82	2.76	17.92	940.00	7.55	9.09
28	3.36	7.12	367.90	1.74	22.77	3.13	20.20	360.60	2.05	22.06
29	2.35	.17	1076.80	9.35	8.18	4.36	51.03	1085.20	3.08	7.53
30	3.76	4.73	774.60	18.50	11.21	2.17	10.98	883.00	4.26	9.78
31	3.52	5.12	301.20	1.39	27.70	2.85	12.54	345.90	3.83	23.69
32	2.10	20.26	531.30	.53	15.58	2.66	34.44	564.30	1.71	14.16
BAG (ACT.)	3.19	13.90	637.80	9.92	13.25	3.76	31.26	809.60	7.05	10.19
BAG (CALC.)	2.86	9.88	660.60	7.79	12.95	3.69	25.10	749.40	6.22	11.09
33	.25	.80	107.40	.15	81.09	.86	23.41	86.60	.04	70.38
34	2.51	7.61	1307.20	1.42	6.69	8.81	220.31	1122.80	.33	5.93
35	.71	3.65	779.60	.75	11.27	3.76	85.26	632.30	.40	11.41
36	.52	2.61	554.50	.65	15.84	1.52	11.62	634.80	.94	13.49
37	.69	1.97	346.00	.96	25.27	1.40	4.75	430.40	1.90	20.07
38	1.23	2.40	334.30	4.17	25.95	2.11	5.65	405.70	4.66	21.07
39	1.54	5.39	400.10	1.72	21.47	2.50	11.95	447.00	6.86	18.74

RESULTS EXPRESSED IN GRAMS/MILE - GRAMS/MINUTE FOR ZERO MPH

LISTING OF MODAL RESULTS ON INDIVIDUAL VEHICLES

NEWARK, N.J.

	VEH	YEAR	MAKE	MODL	CID	VEH	YEAR	MAKE	MODL	CID
	63	72	FORD	PINT	122	64	72	LINC	CONT	460
MODE NO.	HC	CO	CO2	NOXC	MPG	HC	CO	CO2	NOXC	MPG
1	2.65	9.16	366.90	8.04	22.78	5.56	63.06	1506.00	21.22	5.47
2	.85	4.71	199.90	.58	42.26	2.89	12.00	472.50	2.24	17.73
3	2.81	3.26	448.20	3.76	19.20	6.73	109.55	1503.90	17.79	5.23
4	1.71	8.54	304.00	7.06	27.49	2.78	16.84	1019.70	12.49	8.41
5	1.08	6.63	169.40	6.89	48.44	2.31	12.34	822.30	14.51	10.45
6	.61	3.00	95.70	.31	86.72	1.21	1.86	326.80	1.91	26.61
7	1.26	12.08	194.40	5.01	40.83	3.63	40.58	1065.70	16.89	7.78
8	.62	3.25	93.30	1.38	88.42	1.48	5.64	367.20	3.18	23.31
9	1.11	3.71	169.40	7.69	49.65	2.61	9.91	816.30	14.63	10.56
10	.44	2.01	85.00	.59	99.11	4.13	10.85	253.80	1.76	31.26
11	1.56	23.38	206.20	9.37	35.80	3.80	49.21	1073.60	16.91	7.63
12	.59	3.88	94.10	.75	86.96	2.73	15.18	338.80	3.73	23.90
13	1.73	17.69	243.30	7.16	32.09	3.99	25.90	1182.30	20.02	7.18
14	.44	4.72	83.80	.88	95.83	4.11	7.65	265.90	2.80	30.50
15	.71	2.07	89.80	.58	93.13	2.00	4.60	414.80	1.06	20.72
16	2.57	4.03	265.90	2.29	31.65	4.59	60.60	771.00	3.51	10.08
17	1.83	15.67	239.10	5.83	32.93	4.15	35.98	1136.20	16.64	7.36
18	.71	1.13	78.40	.30	107.68	4.39	6.57	284.80	2.46	28.72
19	1.69	15.56	198.50	5.22	38.87	3.60	21.77	1161.10	14.06	7.35
20	.89	3.72	107.30	.28	76.53	5.14	11.43	333.30	2.05	24.15
21	2.47	37.00	242.90	6.10	28.73	4.38	46.78	1268.90	15.69	6.54
22	.70	4.15	84.70	.13	94.98	6.50	12.96	290.00	1.75	26.82
23	2.83	20.23	310.40	6.38	25.30	5.66	39.96	1325.80	12.85	6.31
24	1.49	10.17	201.20	6.50	40.00	2.72	13.12	924.80	11.64	9.30
25	.45	2.68	77.60	.66	105.63	4.15	5.91	237.30	3.61	34.17
26	1.13	1.36	119.70	.83	70.94	3.11	13.08	477.30	3.40	17.48
27	1.56	11.88	211.30	6.47	37.81	3.27	25.87	1029.60	12.92	8.21
28	.52	3.28	90.90	.23	90.90	5.86	12.53	277.20	3.49	28.13
29	2.08	13.29	319.50	5.80	25.58	4.79	32.47	1172.70	8.57	7.16
30	1.41	19.84	230.40	5.03	33.36	2.52	14.38	945.80	8.46	9.09
31	.62	5.35	90.30	.44	88.58	4.00	5.81	280.10	4.95	29.40
32	1.35	1.07	121.30	.64	69.74	2.71	11.42	479.90	1.98	17.53
BAG (ACT.)	2.25	17.34	342.30	4.19	23.56	3.91	23.57	758.90	10.07	10.98
BAG (CALC.)	1.64	10.43	267.80	4.24	30.67	3.28	20.05	756.10	8.73	11.12
33	.33	.43	55.60	.01	154.83	.56	14.09	75.70	.07	89.10
34	4.23	5.12	721.20	.18	11.95	6.94	166.18	908.00	.51	7.45
35	2.44	5.55	536.30	.73	16.06	2.53	46.62	411.10	.50	18.03
36	1.67	8.23	552.30	2.68	15.56	1.32	13.08	557.70	.69	15.24
37	1.57	6.93	330.80	2.60	25.62	.99	5.08	423.10	2.01	20.44
38	1.72	6.75	259.20	2.89	32.24	.60	2.72	445.20	3.96	19.66
39	1.32	5.67	219.10	3.69	38.22	1.11	6.97	485.80	6.60	17.74

RESULTS EXPRESSED I. GRAMS/MILE - GRAMS/MINUTE FOR ZERO MPH

LISTING OF MODAL RESULTS ON INDIVIDUAL VEHICLES

NEWARK, N.J.

	VEH	YEAR	MAKE	MODL	CID	VEH	YEAR	MAKE	MODL	CID
	65	72	MERC	MARQ	429	66	72	OLDS	CUTL	350
MODE NO.	HC	CO	CO2	NOXC	MPG	HC	CO	CO2	NOXC	MPG
1	6.15	121.19	1125.30	17.08	6.65	3.42	27.03	1179.10	5.83	7.20
2	1.79	20.96	528.50	.51	15.65	2.34	21.80	552.40	1.66	14.94
3	4.95	70.41	458.50	15.53	15.18	4.07	52.76	1335.60	1.88	6.20
4	2.45	25.53	939.70	10.22	8.99	2.25	17.74	711.30	5.05	11.89
5	3.12	50.68	783.00	9.13	10.17	2.62	8.33	645.80	6.90	13.30
6	1.51	5.39	349.20	1.27	24.49	2.51	6.00	270.90	2.73	30.79
7	3.82	197.04	747.50	2.87	8.32	2.96	16.35	803.20	10.67	10.59
8	1.18	11.44	382.70	1.65	21.95	2.91	4.46	302.00	6.60	27.89
9	3.13	46.31	737.80	9.26	10.82	2.91	5.50	619.80	11.99	13.92
10	2.[illegible]4	11.91	339.80	2.59	24.42	3.78	8.35	296.30	2.70	27.61
11	7.82	218.21	718.70	3.79	8.17	2.66	11.67	793.10	11.49	10.83
12	4.42	14.35	405.50	1.97	20.08	4.26	26.67	320.80	3.01	23.59
13	6.24	1[illegible]9.78	748.40	7.62	9.43	2.69	10.75	856.20	10.47	10.07
14	2.15	9.64	294.40	1.08	28.05	4.44	9.07	260.30	8.69	30.75
15	1.73	9.72	547.30	.81	15.62	1.70	9.53	425.30	.39	19.91
16	5.45	75.86	934.10	2.41	8.29	4.57	23.64	1225.00	1.54	6.95
17	4.87	128.96	793.50	6.24	8.77	2.61	7.24	879.70	6.44	9.87
18	1.35	7.88	393.20	4.70	21.70	2.48	7.54	357.80	2.15	23.51
19	4.98	154.86	921.70	6.12	7.52	2.46	3.82	778.10	5.97	11.21
20	1.79	11.82	474.20	.28	17.81	2.70	9.82	444.60	2.50	18.94
21	8.45	230.01	932.90	3.19	6.72	3.21	17.12	901.10	9.19	9.46
22	4.84	15.35	386.90	2.42	20.82	4.79	6.41	352.60	3.12	23.49
23	4.81	62.59	1196.90	8.99	6.77	3.17	20.55	962.20	2.65	8.84
24	4.[illegible]9	122.16	771.60	5.45	9.09	2.56	4.72	642.20	7.71	13.49
25	4.[illegible]1	7.29	294.80	2.43	27.82	3.37	3.13	267.80	3.24	31.32
26	2.38	9.96	668.00	.91	12.84	2.65	9.64	583.70	.48	14.62
27	4.[illegible]4	73.30	871.20	8.50	8.88	2.27	3.44	716.10	8.09	12.18
28	3.42	12.19	368.20	1.54	22.29	3.99	5.12	316.60	2.46	26.31
29	3.78	38.92	1092.10	4.60	7.62	3.19	3.14	850.10	2.93	10.26
30	5.37	58.91	714.50	2.09	10.77	2.56	7.85	709.90	4.34	12.15
31	2.14	11.40	367.00	2.08	22.66	2.93	3.88	305.40	.70	27.67
32	2.5[illegible]	12.14	623.90	.67	13.64	2.32	13.68	526.60	.72	15.98
BAG (ACT.)	4.[illegible]	1[illegible]8.16	697.40	5.41	13.09	3.05	16.03	605.30	6.20	13.86
BAG (CALC.)	3.34	53.56	697.90	4.08	11.20	3.05	11.49	628.90	5.87	13.52
33	.48	8.28	124.00	.10	64.07	.55	9.19	130.20	.07	60.63
34	4.97	42.71	1493.40	.91	5.41	5.41	73.54	1603.70	.77	5.11
35	2.43	37.89	780.60	.49	10.47	2.20	31.96	850.60	.35	9.78
36	1.43	18.98	619.60	.47	13.57	1.42	20.27	585.10	.28	14.28
37	.65	2.13	446.40	.93	19.64	1.65	9.55	340.70	.99	24.59
38	.68	3.00	433.20	2.22	20.17	1.88	4.63	363.50	3.34	23.56
39	1.[illegible]	5.90	472.50	4.87	18.30	1.31	3.25	402.70	5.06	21.54

RESULTS EXPRESSED IN GRAMS/MILE - GRAMS/MINUTE FOR ZERO MPH

LISTING OF MODAL RESULTS ON INDIVIDUAL VEHICLES

NEWARK, N.J.

	VEH	YEAR	MAKE	MODL	CID	VEH	YEAR	MAKE	MODL	CID
	67	72	OLDS	DELT	455	68	72	OPEL	STAW	116
MODE NO.	HC	CO	CO2	NOXC	MPG	HC	CO	CO2	NOXC	MPG
1	1.75	29.77	1662.50	8.64	5.22	1.45	3.87	632.60	4.96	13.80
2	2.38	8.74	717.90	1.23	12.01	.84	1.04	253.10	.35	34.48
3	3.31	23.92	1683.60	5.00	5.13	.60	4.29	524.70	1.03	16.64
4	1.22	9.62	1164.00	3.49	7.50	1.14	.86	405.20	1.76	21.64
5	1.47	7.50	876.80	5.84	9.94	1.20	5.68	363.10	3.94	23.62
6	2.86	6.50	563.70	.63	15.22	.42	1.49	174.20	.11	49.90
7	3.87	82.25	931.60	7.58	8.27	2.82	59.81	433.20	3.55	16.55
8	2.21	4.91	262.70	2.47	31.99	1.10	2.75	70.50	2.14	113.34
9	1.88	5.68	767.00	2.56	11.35	1.58	4.11	420.80	6.01	20.53
10	4.49	5.88	322.00	2.18	25.69	.84	.41	181.50	1.00	48.03
11	2.16	82.89	1194.40	16.25	6.67	2.91	74.61	480.20	1.81	14.63
12	1.93	3.09	403.00	3.80	21.44	2.25	2.08	189.60	.44	44.38
13	2.49	21.60	1294.60	12.58	6.64	2.78	18.06	548.30	7.69	15.16
14	2.37	.88	315.10	3.79	27.39	1.36	.85	161.90	.86	52.97
15	1.57	2.37	574.00	1.91	15.23	.80	1.40	251.00	.69	34.71
16	5.78	3.60	1685.40	3.09	5.19	.37	5.51	492.10	.82	17.68
17	2.33	6.99	1358.20	7.58	6.45	1.83	7.11	492.40	6.18	17.42
18	1.94	4.02	398.70	2.23	21.59	.81	.49	204.40	.74	42.72
19	1.51	12.57	1374.50	4.70	6.34	1.37	4.06	497.50	4.90	17.46
20	2.37	5.22	492.90	5.55	17.45	1.22	.56	208.10	.61	41.70
21	4.98	176.56	1301.80	6.05	5.56	3.37	71.17	543.80	5.10	13.32
22	3.21	3.96	369.70	3.05	22.99	1.45	2.59	198.90	1.16	42.76
23	3.14	17.42	1448.50	3.32	5.97	1.93	1.00	554.10	5.52	15.80
24	1.59	6.87	938.50	7.16	9.30	1.58	12.42	431.70	5.22	19.45
25	1.24	.65	294.40	2.09	29.65	1.09	.63	180.30	1.26	48.04
26	2.44	9.28	707.40	2.33	12.16	.64	0.00	325.40	.51	27.11
27	1.94	8.26	1049.90	9.55	8.30	1.51	11.30	486.90	6.44	17.42
28	2.87	.20	286.60	.51	29.98	.96	.14	198.70	.97	43.95
29	3.19	18.76	1263.30	5.98	6.81	1.40	.72	508.10	4.33	17.28
30	2.58	99.95	995.90	4.81	7.65	2.19	34.96	444.60	9.75	17.52
31	1.45	3.13	301.80	4.83	28.52	.90	.83	202.40	1.54	42.97
32	2.91	5.81	598.40	2.69	14.39	1.09	0.00	268.00	1.33	32.70
BAG (ACT.)	2.65	30.70	802.70	6.77	10.33	1.15	16.49	379.90	3.96	21.68
BAG (CALC.)	2.25	19.98	829.60	5.82	10.22	1.40	11.68	387.70	3.44	21.62
33	.36	1.03	149.90	.14	58.14	.12	.68	43.10	.04	199.23
34	3.26	13.68	1799.00	1.18	4.85	.71	3.53	517.30	.38	16.90
35	1.26	6.11	1070.70	.92	8.19	.52	1.63	426.60	.42	20.60
36	.61	4.80	855.70	.94	10.26	.39	1.45	286.50	.44	30.60
37	1.15	4.00	472.70	1.52	18.39	.54	1.91	225.50	.99	38.55
38	.91	2.66	451.30	3.03	19.36	.45	1.83	252.20	2.25	34.60
39	.72	2.93	465.90	5.57	18.77	.43	2.67	290.00	2.79	30.03

RESULTS EXPRESSED IN GRAMS/MILE - GRAMS/MINUTE FOR ZERO MPH

LISTING OF MODAL RESULTS ON INDIVIDUAL VEHICLES

NEWARK, N.J.

MODE NO.	VEH 69 HC	YEAR 72 CO	MAKE PLYM CO2	MODL FURY NOXC	CID 318 MPG	VEH 70 HC	YEAR 72 CO	MAKE PLYM CO2	MODL FRY1 NOXC	CID 318 MPG
1	3.72	49.77	639.10	9.19	12.17	20.01	97.81	1166.70	12.51	6.41
2	2.09	8.74	268.70	2.67	30.70	11.01	48.67	394.70	2.06	17.54
3	3.96	56.73	620.60	5.26	12.29	27.45	179.09	1126.10	6.63	5.94
4	3.28	30.81	432.00	8.43	18.08	15.09	86.17	779.80	7.26	9.22
5	2.52	11.10	394.90	8.98	21.12	10.44	15.03	662.60	7.21	12.34
6	1.00	2.15	138.90	1.91	61.02	7.16	8.25	202.20	7.69	37.31
7	4.56	28.13	450.00	7.93	17.45	13.33	59.00	782.50	7.84	9.67
8	1.39	8.56	161.10	3.49	49.59	7.35	10.42	218.30	4.87	34.40
9	2.41	14.18	289.10	9.17	27.82	10.52	14.85	654.00	7.59	12.49
10	1.61	5.58	139.60	1.57	57.83	11.07	23.27	188.40	2.35	34.13
11	3.65	40.03	496.20	11.44	15.55	14.64	57.39	844.30	9.11	9.05
12	2.23	7.96	167.20	2.58	47.52	15.08	23.54	240.90	3.09	27.25
13	3.23	22.51	537.80	12.17	15.21	15.06	38.86	856.30	10.04	9.20
14	1.36	4.05	141.50	2.31	58.32	9.91	14.93	195.00	2.89	35.52
15	1.50	1.50	216.00	1.69	39.78	8.45	27.60	257.00	1.85	27.13
16	5.36	5.61	756.20	9.61	11.35	25.86	139.53	657.20	1.33	9.26
17	3.72	30.45	510.50	10.15	15.57	16.36	49.90	859.20	8.40	8.97
18	1.50	5.26	150.30	1.59	54.34	10.59	16.44	205.10	2.56	33.55
19	3.49	32.62	509.70	8.13	15.52	16.71	45.69	857.40	7.76	9.04
20	1.46	7.67	196.40	2.11	41.69	15.61	27.32	262.30	4.02	25.02
21	5.01	95.68	551.60	9.17	12.36	15.85	107.48	874.80	7.37	8.11
22	2.40	7.44	151.60	2.16	51.93	15.09	29.33	218.60	2.59	28.40
23	4.22	37.04	618.00	9.33	12.87	19.77	64.86	810.20	8.40	9.10
24	2.51	12.83	407.70	8.07	20.36	11.25	17.94	709.00	7.59	11.48
25	1.91	4.68	118.30	1.96	67.38	11.24	14.38	180.20	3.31	37.22
26	2.56	10.73	248.90	3.71	32.41	11.80	39.30	359.00	1.53	19.37
27	3.10	23.13	463.30	9.11	17.43	12.83	27.30	743.40	8.63	10.73
28	1.80	7.99	151.40	1.94	52.31	12.22	25.50	230.40	2.98	28.70
29	3.83	25.00	501.50	8.65	16.05	18.20	58.62	865.20	7.12	8.74
30	3.16	23.21	313.00	7.95	24.71	11.97	25.51	813.20	8.72	9.96
31	2.17	6.89	137.40	2.97	57.34	10.15	12.93	204.30	4.86	34.56
32	2.96	3.11	332.80	6.03	25.57	13.38	39.43	326.50	2.12	20.60
BAG (ACT.)	2.86	24.83	356.20	7.02	22.00	14.59	39.53	544.50	6.55	13.59
BAG (CALC.)	2.68	18.53	466.10	7.09	17.62	10.00	36.19	574.00	6.02	13.40
33	.59	11.11	90.30	.06	81.39	.77	27.40	59.30	.03	84.69
34	5.44	117.47	1110.10	.64	6.77	8.52	307.19	841.80	.28	6.57
35	1.98	21.16	818.30	1.06	10.35	3.58	104.08	800.30	.58	9.10
36	1.54	1.86	380.10	3.65	22.88	2.29	65.99	497.50	.35	14.59
37	1.59	1.85	380.10	3.65	22.87	1.70	9.17	338.70	1.80	24.76
38	1.17	2.50	397.10	5.27	21.93	1.42	1.90	338.30	4.10	25.67
39	1.36	6.75	444.80	6.93	19.31	1.58	10.79	372.80	4.67	22.48

RESULTS EXPRESSED IN GRAMS/MILE - GRAMS/MINUTE FOR ZERO MPH

LISTING OF MODAL RESULTS ON INDIVIDUAL VEHICLES

NEWARK, N.J.

	VEH	YEAR	MAKE	MODL	CID	VEH	YEAR	MAKE	MODL	CID
	71	72	PONT	LEMA	350	72	72	PONT	GRAN	400
MODE NO.	HC	CO	CO2	NOXC	MPG	HC	CO	CO2	NOXC	MPG
1	1.65	7.51	747.20	1.16	11.64	9.70	170.56	1023.50	1.46	6.71
2	1.84	16.06	638.10	.47	13.26	3.55	79.22	404.80	.17	16.42
3	4.21	13.51	1590.10	1.64	5.46	13.16	322.21	1061.80	.69	5.51
4	2.10	9.36	1037.30	3.49	8.38	4.58	86.91	964.40	2.62	7.96
5	1.99	11.33	800.40	4.55	10.76	3.27	45.96	758.20	5.47	10.56
6	1.35	4.33	304.60	1.98	28.11	1.89	14.01	226.70	1.06	34.85
7	4.24	41.29	906.30	7.97	9.01	5.15	59.94	828.90	2.32	9.45
8	2.24	9.62	311.80	3.78	26.57	2.17	26.92	343.40	1.67	22.61
9	2.97	8.41	718.90	8.76	11.97	3.93	37.18	704.90	9.23	11.44
10	1.44	7.03	416.20	2.99	20.56	3.96	30.97	290.90	1.80	25.21
11	3.58	21.79	1020.80	9.64	8.32	5.22	54.41	895.60	11.66	8.90
12	2.01	6.94	328.80	2.65	25.65	5.67	36.38	314.80	1.99	22.76
13	3.70	5.71	1088.10	10.27	8.01	5.98	67.39	939.30	11.32	8.34
14	3.02	6.54	252.40	1.55	32.60	3.34	25.32	230.00	1.04	31.65
15	2.92	5.68	551.30	2.30	15.58	3.67	60.50	365.90	.27	18.78
16	4.37	10.48	1669.70	1.69	5.22	6.80	136.20	710.70	1.02	9.38
17	2.79	13.62	1122.30	5.98	7.70	5.82	85.03	986.00	7.74	7.80
18	1.61	6.54	317.40	1.58	26.67	3.11	31.61	321.40	1.63	23.30
19	2.44	11.94	1079.10	5.19	8.03	4.83	59.75	896.70	5.90	8.82
20	1.34	5.12	372.50	2.19	23.07	4.64	43.64	349.50	1.85	20.51
21	4.64	38.28	1191.80	17.95	7.01	6.18	78.59	999.10	10.18	7.77
22	3.20	9.03	421.00	4.30	19.93	5.94	36.63	281.10	1.45	24.83
23	2.99	11.24	1080.70	2.38	8.01	8.83	154.94	1162.30	3.42	6.19
24	2.57	8.95	869.70	6.93	9.95	4.33	36.75	811.80	7.71	10.05
25	1.43	6.94	268.20	2.48	31.29	2.71	22.90	270.50	1.85	28.17
26	3.91	2.71	718.60	4.59	12.07	5.75	53.29	539.60	1.44	13.83
27	3.07	12.13	896.90	7.45	9.59	5.33	54.13	878.10	8.64	9.06
28	2.95	5.08	309.40	2.23	27.16	5.40	40.03	286.50	1.56	24.21
29	3.27	13.37	1251.20	4.15	6.92	7.18	137.86	1039.00	2.97	6.94
30	3.16	22.95	923.10	6.76	9.16	4.02	40.04	884.20	7.99	9.25
31	2.97	6.53	230.60	2.96	35.46	2.79	24.81	254.40	2.05	29.37
32	3.53	.84	645.50	5.98	13.49	5.51	68.66	489.40	.24	14.44
BAG (ACT.)	3.45	15.10	728.40	6.31	11.65	5.56	64.90	654.30	5.78	11.47
BAG (CALC.)	2.60	11.44	713.60	4.91	12.00	4.86	57.27	699.90	5.01	11.02
33	.50	1.81	120.10	.14	71.27	1.67	38.57	64.70	.03	67.96
34	4.41	10.68	1427.90	1.41	6.08	17.98	466.66	921.50	.24	5.18
35	2.14	7.86	810.80	.98	10.69	6.23	165.49	628.60	.32	9.77
36	1.13	4.77	649.10	.93	13.44	3.27	57.98	668.30	.49	11.53
37	.62	3.24	435.80	.85	20.04	1.77	24.77	512.50	.83	15.93
38	1.67	7.67	424.20	3.58	20.10	2.42	23.93	442.20	2.69	18.21
39	1.04	4.61	338.40	3.30	25.44	2.54	24.84	478.40	4.69	16.89

RESULTS EXPRESSED IN GRAMS/MILE - GRAMS/MINUTE FOR ZERO MPH

LISTING OF MODAL RESULTS ON INDIVIDUAL VEHICLES

NEWARK, N.J.

MODE NO.	VEH 73 HC	YEAR 72 CO	MAKE TOYO CO2	MODL CELI NOXC	CID 120 MPG	VEH 74 HC	YEAR 72 CO	MAKE VOLK CO2	MODL CONV NOXC	CID 97 MPG
1	1.79	6.12	346.40	2.78	24.50	7.72	106.76	454.80	6.71	13.72
2	1.62	4.89	182.90	.78	45.35	2.71	39.19	409.80	1.30	18.49
3	9.16	17.70	511.90	22.25	15.60	4.45	122.45	347.50	2.65	16.02
4	2.60	25.38	579.20	6.97	14.15	7.03	55.87	513.40	6.87	14.23
5	1.21	13.35	400.40	5.51	20.87	2.24	22.83	405.40	7.45	19.79
6	.55	3.92	180.90	1.20	47.01	1.04	13.55	220.50	1.19	36.21
7	1.90	13.49	387.60	7.83	21.40	2.50	14.73	353.60	7.30	23.07
8	.59	1.49	170.50	1.76	50.80	.94	14.97	181.10	.67	42.75
9	1.15	4.16	308.50	6.14	27.84	1.39	14.91	317.20	7.25	25.72
10	1.29	3.82	124.80	.91	65.80	2.29	8.10	129.60	1.60	59.33
11	1.97	16.95	361.10	7.23	22.53	2.57	42.24	426.40	4.95	17.72
12	2.11	2.12	149.30	1.24	55.71	3.15	19.49	170.60	1.64	42.02
13	2.07	12.79	442.70	9.47	18.91	2.70	60.77	441.90	7.73	16.26
14	.86	5.63	118.50	.83	68.23	1.44	16.44	132.10	1.08	54.62
15	1.73	42.24	151.50	.21	39.74	1.52	45.01	199.80	.21	32.23
16	2.35	32.86	804.80	.70	10.27	2.88	105.67	251.60	.60	20.80
17	2.68	18.70	438.50	9.11	18.63	4.82	61.12	411.10	5.66	16.99
18	1.51	4.40	108.00	1.76	74.14	1.88	26.62	162.20	.95	42.27
19	2.01	11.66	384.00	9.77	21.72	2.36	38.62	307.70	4.64	23.61
20	3.35	4.96	128.40	1.90	60.49	2.10	24.69	200.90	1.26	36.03
21	2.82	31.52	486.20	8.93	16.29	5.96	48.31	440.10	8.85	16.59
22	2.32	1.92	141.20	1.07	58.92	2.99	28.60	185.40	1.52	37.01
23	3.12	24.56	517.30	6.33	15.69	2.94	73.45	318.30	5.13	20.03
24	1.75	8.29	435.60	7.65	19.54	1.90	24.99	397.00	7.85	20.07
25	1.07	2.29	108.90	.96	76.58	2.08	10.74	157.70	.69	48.99
26	1.89	7.30	192.90	.23	42.19	2.31	57.54	283.20	.24	23.30
27	2.20	12.26	378.70	9.68	21.92	2.56	41.56	369.40	5.10	20.04
28	1.97	1.94	143.10	1.33	58.24	1.42	25.31	165.20	.87	42.37
29	3.06	12.17	452.20	5.46	18.45	4.43	94.49	404.90	2.60	15.64
30	1.63	8.51	354.20	7.26	23.81	1.37	23.09	294.10	6.08	26.52
31	.76	2.65	132.20	1.58	63.96	1.54	14.74	175.80	1.31	43.54
32	2.58	16.39	163.60	.18	44.93	4.50	74.16	261.40	.22	22.63
BAG (ACT.)	2.08	9.01	333.30	5.13	25.07	2.75	39.90	335.00	4.98	21.84
BAG (CALC.)	1.77	10.09	348.50	5.15	23.99	2.29	30.76	325.30	4.12	23.30
33	.28	2.02	34.60	0.06	229.56	.45	16.08	31.10	.04	153.57
34	2.03	8.61	544.40	.16	15.73	4.05	167.03	515.50	.47	11.22
35	1.56	21.32	497.50	1.10	16.56	3.04	92.50	435.70	.60	15.03
36	2.72	24.95	477.90	2.74	16.88	1.59	45.86	248.30	.33	27.27
37	1.24	10.20	324.70	3.46	25.75	.93	12.95	226.60	1.31	35.52
38	.59	2.67	269.10	3.62	32.25	.69	7.13	149.30	2.17	54.55
39	.53	2.09	230.20	3.49	37.74	.74	3.78	251.80	3.87	34.12

RESULTS EXPRESSED IN GRAMS/MILE - GRAMS/MINUTE FOR ZERO MPH

APPENDIX D

LISTING OF MODAL RESULTS ON INDIVIDUAL VEHICLES

NEWARK, N.J.

	VEH	YEAR	MAKE	MODL	CID
	75	72	VOLK	SEDA	97
MODE NO.	HC	CO	CO2	NOXC	MPG
1	2.62	36.83	565.40	.76	12.16
2	5.21	34.72	202.50	5.37	32.44
3	2.63	34.42	515.50	2.96	15.36
4	2.33	29.82	398.40	.82	19.61
5	1.42	19.88	337.10	.41	23.81
6	.64	10.07	160.70	2.31	49.71
7	1.75	23.28	424.10	2.16	19.04
8	1.04	9.30	154.70	5.04	51.42
9	1.37	13.78	353.60	1.35	23.38
10	1.76	13.25	152.30	13.49	49.67
11	3.24	39.05	439.10	4.60	17.40
12	1.66	14.57	166.60	7.01	45.57
13	3.[illegible]1	16.97	452.60	4.15	18.16
14	1.37	11.97	118.50	3.05	62.66
15	1.[illegible]	18.15	201.30	1.13	38.09
16	1.61	29.15	501.10	4.33	16.08
17	1.14	48.21	452.20	2.05	15.70
18	.76	8.43	141.80	3.51	56.37
19	2.92	42.51	411.50	.37	18.21
20	.86	10.74	188.10	3.99	42.73
21	3.81	40.53	473.00	3.29	16.17
22	1.24	13.18	155.50	6.06	49.27
23	2.76	49.88	479.70	.73	15.66
24	1.96	27.24	414.50	2.69	19.15
25	1.05	9.69	114.90	4.34	66.50
26	.47	29.99	306.50	1.39	24.99
27	2.84	33.24	426.00	4.15	18.22
28	1.16	14.80	154.40	4.33	48.94
29	2.19	[illegible]3.23	451.30	.64	17.60
30	2.68	33.37	343.30	1.20	19.62
31	1.33	11.67	145.90	4.87	52.99
32	1.54	34.29	265.10	1.03	27.40
BAG (ACT.)	1.98	27.50	353.60	4.58	22.02
BAG (CALC.)	1.75	20.11	343.30	3.78	23.33
33	.19	3.42	50.20	.06	157.99
34	2.16	38.45	632.90	.54	12.68
35	1.36	18.12	377.90	.44	21.61
36	1.24	17.93	352.70	.63	23.06
37	.68	6.13	246.29	1.09	34.40
38	.64	3.62	210.71	1.96	45.64
39	.72	6.25	224.15	3.12	37.58

RESULTS EXPRESSED IN GRAMS/MILE - GRAMS/MINUTE FOR ZERO MPH

APPENDIX E

THE 3-METHYL 2-BENZOTHIAZOLINONE HYDRAZONE TEST METHOD FOR ALIPHATIC ALDEHYDES IN AUTOMOTIVE EXHAUST

1. Principle and Applicability

1.1 3-methyl 2-benzothiazolinone hydrazone (3MBTH) is a sensitive colorimetric method for the determination of water soluble aliphatic aldehydes, measured as formaldehyde, in auto exhaust. Aliphatic aldehydes react with 3 MBTH in the presence of ferric chloride to form a blue cationic dye which is stable for hours and is read at 635 mμ with a suitable spectrophotometer.

1.2 Auto exhaust is sampled directly from the dilution tunnel of a constant volume sampler (CVS) using fritted samplers.

The exhaust is drawn through chilled absorbing solution using bubbler traps. After collection the samples are allowed to stand for two hours at room temperature to complete the reaction of the aldehydes with the 3 MBTH. Aliquots of the samples are then oxidized with ferric chloride and diluted to a final volume with acetone. The samples are then read at 635 mμ on a spectrophotometer.

2. Range and Sensitivity

2.1 The range concentration for aldehydes in CVS diluted samples using the Federal Test Procedure falls into three categories.

2.1.1 Pre-1968 cars: Aldehydes from CVS diluted samples range from 5 to 10 PPM aldehyde.

2.1.2 1968 to 1974 without catalyst: Aldehydes from CVS diluted samples range from 2 to 5 PPM aldehyde.

w.1.3 Catalyst cars and special clean air cars: Aldehydes from CVS diluted samples range from +.1 or less to 2 PPM aldehyde, the cold unstable cycle being highest in aldehyde and the cold stabilized lowest in aldehyde.

2.2 Sensitivity. By varying the sample absorbing solution volume and/or by varying the sample volume taken, adequate sensitivity can be obtained for all the above ranges.

3. Interference

3.1 Sulfur dioxide (SO_2) causes a negative response. The extent of the interference has not yet been fully determined and only becomes apparent when analyzing exhaust from catalytic systems using gasoline with a changing percentage of sulfur content.

3.2 Nitrogen oxides (NO_x) were a minor positive interference when run with a calibrating aldehyde. Sulfur dioxide was not present during the test.

4. Precision, Accuracy, and Stability

4.1 Precision. Relative standard deviation of .03 for a mean of .320 absorbance units was obtained.

4.2 Accuracy. No direct method for determining accuracy as applied to auto exhaust is presently available: e.g. Section 3.1.

4.3 Stability of Reagents

4.3.1 3 MBTH solution is stable for approximately one week but it is desirable to prepare it before each day's runs.

4.3.2 Ferric chloride without acid added is unstable and should be prepared fresh daily.

4.3.3 Acetone should be kept stoppered in glass bottles or metal containers. Acetone kept in plastic containers causes clouding of the final solution.

4.3.4 Distilled water should be used.

4.4 Stability of Reaction

4.4.1 A two-hour reaction time is necessary to change 95% of the aldehydes to hydrazones.

4.4.2 Five minutes oxidation time is used to develop color.

4.4.3 After dilution with acetone the sample is stable for at least 40 minutes.

5. Apparatus

5.1 Metering Devices

5.1.1 The sampler (Figure 1) was developed by this lab for direct wet sampling of aldehydes in CVS diluted auto exhaust. The instrument consists of five major parts: Sample manifolds, sampling area, exhaust manifolds, a vacuum pump, and a flow switching control system.

5.1.2 Rotometers. 500 to 3000 cc per min. air metering range.

5.1.3 Wet Test Meter. 3 liters per revolution.

5.1.4 Spectrophotometer

5.2 Miscellaneous

5.2.1 Fritted bubblers with 12/5 ball socket fittings. Inner member is a coarse variety frit, (A) with (145-175) pore.

5.2.2 Sample probe. Type 316 stainless steel, 1/4" O.D., fitted with a Swagelok fitting at one end for connection to sampler inlet, wrapped with a 1/4" silicone heater tape electrically controlled by a variable transformer and the heater tape covered with three turns of asbestos cord.

5.2.3 Pump. Carbon vane type.

5.2.4 Rubber bulbs, oval shape, for pipetting. One to be fitted with 12/5 male ball fitting for flushing inlet stem of frit.

5.2.5 Glass stoppered bottles, 60 cc volume, for holding samples.

5.2.6 100 cc volumetric flasks.

5.2.7 Pipettes. 5, 10, 20, 50 cc volumes.

5.2.8 Plastic drying tubes.

5.2.9 Desiccant, indicating silica gel.

5.2.10 Stopwatch.

6. Reagents

6.1 The various reagents are prepared on a weight volume basis. All chemicals are analytical reagent grade. Distilled water is used with all preparation.

6.2 3-methyl 2-benzothiazolinone hydrazone hydrochloride solution (0.2%). Dissolve 2 grams of 3 MBTH in distilled water and dilute to one liter. The solution may be stable for a few days but should be made fresh daily. If samples are collected in water, weigh just enough 3 MBTH for each sample collected.

6.3 Oxidizing reagent $FeCl_3.6H_2$ (without sulfamic acid). Dissolve two grams of $FeCl_3.6H_2O$ in distilled water and dilute to one liter. This solution is unstable and must be prepared daily.

6.4 Acetone. Acetone should be kept stoppered in glass or metal container. Acetone kept in polyethylene will cause clouding of the final solution.

7. Procedure

7.1 Sampling. The fritted bubbler method for sampling aldehyde in auto exhaust is described.

7.2 Add 25 cc of .2% 3MBTH or H_2O to the primary and back-up bubblers. The collecting volume in the primary may be changed according to the concentration of aldehyde in auto exhaust. The back-up bubbler may be eliminated once the percent breakthrough has been established. Add the percent breakthrough to the results.

7.3 Preparation for Sampling

7.3.1 Attach the end of the sample probe to the CVS tunnel and the other end to the sampler. Preheat sample probe and sample manifolds to about 150°C.

7.3.2 Connect the primary and back-up bubblers and position for placement in the sampling train. The bubblers will be connected to the sample manifold seconds before sampling starts.

7.3.3 The flexible (Teflon) exhaust manifold lines with 12/5 female ball fittings are connected to the bubblers.

7.4 Sampling

7.4.1 Federal Test Procedure sampling. Three discrete samples are collected directly from the CVS dilution tunnel.

Before sampling, heat the sample probe and the sample manifolds to about 150°C. Place matched sample bubblers in ice baths and connect to the sampler. Make sure the sample solutions are chilled to ice temperature before sampling. Start the sampler vacuum pump before the run to insure vacuum stability. At the start of the 505 cold unstabilized cycle, the auto exhaust sample passes into the bubblers attached to the manifold. The flow rates are adjusted if needed. At the end of the 505 cold unstabilized cycle, the manifold starts the flow of sample to a second pair of bubblers connected to manifold. This is the start of the 867 cold stabilized cycle. The flow rates are adjusted if needed. After 867 seconds, the bubblers are removed and the collecting solution is drawn up into the frit inlet sidearm of the bubbler with the aid of a 12/5 male socket fitted to a one ounce rubber bulb. Then the liquid is forced back down into the bubbler base. This washes all the samples condensed into the sample and mixes it. This procedure is repeated several times for each bubbler. The bubblers with samples are set aside and a new set of pre-chilled bubblers are put in place. After the

ten minute soak period is completed, the final hot transit cycle of 505 seconds starts. Flow rates are adjusted. After 505 seconds the cycle ends. The bubblers are removed and the above sample handling procedure repeated. After sampling is complete, the solutions are transferred to appropriate containers for analysis. The bubblers are rinsed clean with tap water and given a final rinse with distilled water and dried.

7.5 Sample Work-up

After a series of samples has been taken, the bubblers are taken to the laboratory for analysis.

7.5.1 Pour the solutions from the bubblers into 60 ml glass stoppered bottles and give a sample number. If the collecting solution is 3 MBTH, nothing further need be added. If the solution is H_2O, then add 0.2% by weight of 3 MBTH to the sample. Shake the sample frequently to dissolve and mix the 3 MBTH.

7.5.2 Pipetting may begin after the samples have reached room temperature and after all the 3 MBTH has dissolved in the solution, preferably two hours after sampling. 10 ml of each sample is pipetted into 100 ml volumetric flasks. Also, 10 ml of 0.2% MBTH is pipetted into a 100 ml volumetric flash for use as a blank.

7.5.3 All the flasks are stoppered and allowed to stand until two hours have elapsed since sampling.

7.5.4 A solution of 0.2% $FeCl_3$ is prepared. After the two hours have elapsed, 25 ml of 0.2% $FeCl_3$, measured with a graduate cylinder, is added to each sample.

7.5.5 The time of each addition is noted, so that after five minutes has elapsed, acetone is added to the samples and mixed.

7.5.6 After all samples have had acetone added, adjust to the mark with acetone and mix again.

7.5.7 The samples are then read at a wave length of 635 mu with a suitable spectrophotometer.

7.5.8 The absorbance is recorded for calculations.

8. Calibration

8.1 Method Used for Calibration of 3 MBTH Method Standard bag sample method is used to calibrate the 3 MBTH method. For this method acetaldehyde is used. The procedure for calibrating with acetaldehyde is:

8.1.1 Obtain reagent grade acetaldehyde. Remove cap and replace it with a rubber septum. With a large volume syringe remove the air from above the liquid by sampling through the septum several times. After the air has been removed from above the liquid acetaldehyde, the remaining gas in the bottle is 99% acetaldehyde. Since the boiling point of acetaldehyde is 21°C, the room temperature should be kept at a temperature of 21°C+. This creates a slight positive pressure above atmospheric, 760 mm, in the bottle. The bottle of acetaldehyde is now ready for preparing standard aldehyde bags. When the bottle is not in use, store it in a hood. Do not store it in a refrigerator or freezer. Storing in refrigerators causes excessive polymerization of the aldehyde forming the trimer.

8.1.2 To prepare a standard bag, meter the desired volume of N_2 needed for the test. From the acetaldehyde bottle remove the number of μl of acetaldehyde vapor needed to produce the PPM desired for the standard; e.g. 1 μl vapor in 1 liter of N_2 equals 1 PPM. Insert the syringe needle through the wall of the bag and inject the acetaldehyde into the bag with a smooth stroke. Withdraw the syringe without moving the plunger. Tape the needle hole closed with transparent tape.

8.1.3 The bag of acetaldehyde is sampled using the same procedure set forth in 7.4.

8.1.4 Sample work-up is the same as in 7.5.

8.1.5 Calculation of molar absorptivity

$$\text{Molar absorptivity} = \varepsilon = \frac{A}{Cl}$$

where

A = absorbance of the final dye solution
C = concentration in moles of aldehyde per liter of final dye solution
l = optical path length of 1 cm

Molar absorptivity of acetaldehyde should be 65,000.

9. Calculations

9.1 Total Bubbler Absorbancy (TBA) = the absorbancy read per sample multiplied by the aliquot per sample; e.g. bubbler #1 25 cc sample volume 10 cc aliquot. TBA = Abs. x 2.5.
Bubbler #2 25 cc sample volume 10 cc aliquot. TBA = Abs. x 2.5.

9.2 Total Sample Absorbance (TSA) = the additive total bubbler absorbancy (TBA).

TSA = TBA #1 + TBA #2

e.g. TSA = Abs. #1 x 2.5 + Abs. #2 x 2.5.

9.3 Calculation of PPM Aldehyde

$$PPM = \frac{(TSA)\ (1/.60 \times 22.4)\ (1.2)\ (273^\circ K)\ (P\ sample)}{(SFR\ in\ liters/min.)\ (sampling\ time)\ (sample\ temp^\circ K)\ (P\ Std.)}$$

GAS CHROMATOGRAPHIC ANALYSIS

OF LIGHT HYDROCARBONS FROM AUTOMOBILE EXHAUST

General Concepts:

Samples of auto exhaust are collected under controlled conditions during the Federal Urban Driving Cycle. Both the transient and stabilized portions of the driving cycle are tested for cold and hot start conditions. These samples, diluted with known amounts of ambient air, are collected in Tedlar plastic bags; after equilibration, a sample is withdrawn from the bag by a vacuum pump through an injection loop of the gas chromatograph (Fig. 1). When the injection loop has been purged by the sample gas, the loop is connected in series to the analytical column of the gas chromatograph (GC) by means of a two-way valve. The GC analyzes the exhaust sample gas for the following components: Methane (CH_4), acetylene (C_2H_2), ethylene (C_2H_4), ethane (C_2H_6) and propane (C_3H_8). The results of the analysis are produced as a chromatogram and a digital print-out of the areas under the curves of the chromatogram. By comparing the test results with identical analyses of known pure gases it is possible to identify and measure the amounts of each component of interest in the exhaust gas samples.

Instrumentation:

Gas Chromatograph - Perkin-Elmer Model 900 with Porapak "Q" column (6' x 1/16" I.D.) and F.I.D.
Digital Integrator - Infotronic Model CRS 108 with Victor Digit Matic printer unit.
Recorder - Leeds & Northrup Speedways "W" single channel (response 0.1-1.0 mv)
Carrier Gas - Helium, scientific grade 6
Fuel Gas - Hydrogen scientific grade 6
Air - Zero air with <0.5 ppm CO

Procedure:

After the injector loop (IL) has been purged by the exhaust gas sample, the two-way valve (V) is positioned to introduce the contents of IL into the analytical column of the gas chromatograph (GC). Simultaneously, the digital integrator (Int.) is placed in the auto mode, preparing the system to record the presence of each component separated from the exhaust gas. Following an initial pressure surge the components elute from the column over approximately six (6) minutes. At the end of this six (6) minute period the GC auto temp. programmer increases the oven temp. to hasten the elution of long-chain hydrocarbons prior to the next analysis.

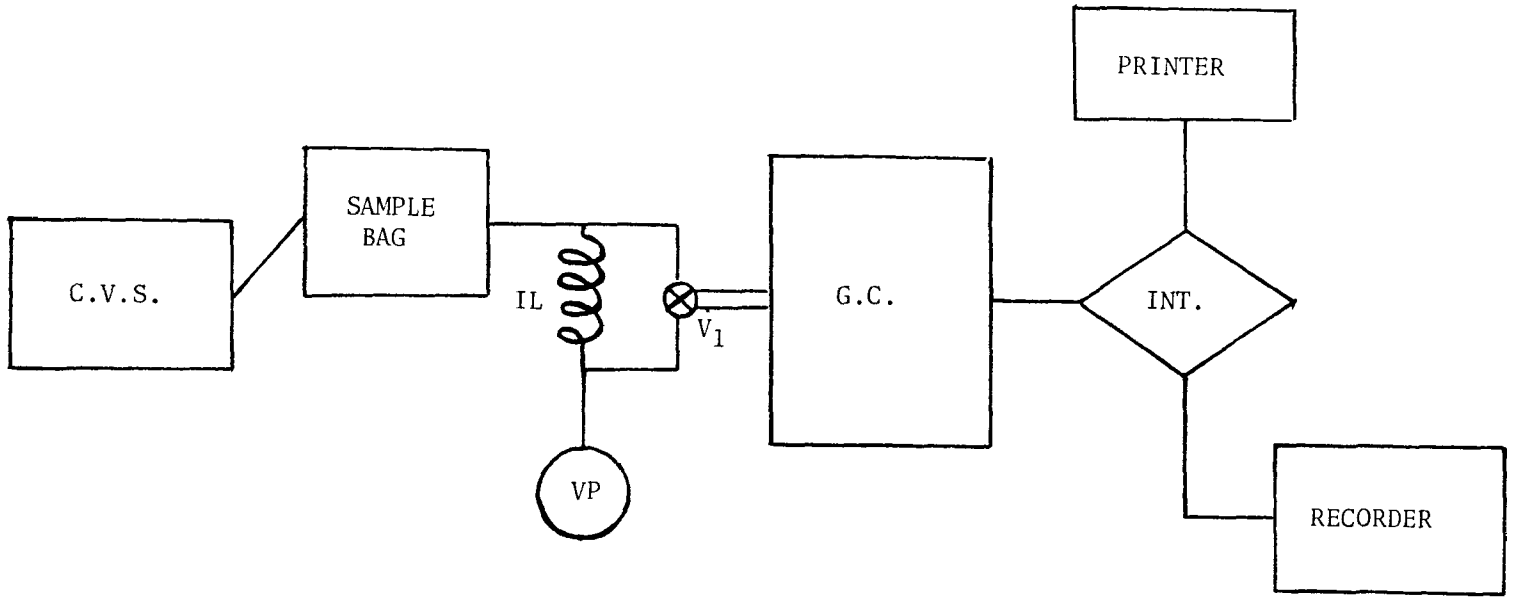

CVS - Constant volume sampler (collects exhaust gas and dilutes with ambient air)
Sample Bag - Plastic sample bag (holds sample of exhaust gas/air for analysis)
VP - Vacuum pump (draws sample of exhaust gas/air from sample bag through the injection loop)
IL - Injection loop (permits reproducible constant volume of sample to be injected into gas chromatograph)
GC - Gas chromatograph (contains analytical column which separates components of interest from sample)
Int. - Digital integrator (integrates the areas contained under each component curve on the recorder)
Recorder - Analog recorder (graphically indicates presence of individual components separated by the GC)
Printer - Prints out the integration for each component
V_1 - Two way valve (in first position the sample gas is drawn through the IL and discharged through the VP to atmosphere; GC system is isolated. In second position the IL is connected in series with the GC analytical column and contents of the IL are swept into the GC by the carrier gas)

FIGURE 1 GAS CHROMATOGRAPHIC SYSTEM FOR LIGHT HYDROCARBON ANALYSIS

Initial calibration was made utilizing a standard gas mixture supplied by Air Products, Allentown, Pa. The gas assay was:

CH_4	1.1 ppm
C_2H_2	1.2 ppm
C_2H_4	1.1 ppm
C_2H_6	1.2 ppm
C_3H_8	1.0 ppm
(N_2 balance gas)	

Peak identification, elution times and area to concentration equivalences are determined from this calibration (Fig. 2 and calculations section).

Repetitive analyses with the test gas were used to establish mean deviation and reproducibility (see calcualtion sect.). The operating parameters of the GC were determined following the above repetitive analyses and optimization procedures outlined in Perkin-Elmer operating manual #990-9679 (Figs. 3 and 4).

Parameters:

Temperatures - GC oven: 60°C isothermal conditions for initial six (6) minutes of analysis; then increased to 110°C at 24°C/min. The final temperature of 110°C is held for four (4) minutes, then returned to 60°C at the rate of 50°C/min. The GC injector and manifold are at 125°C constant.

Gas flows and pressures - Helium carrier gas - 46 psig on instrument regulator, 5.5 units on rotameter producing 31.6 ml/min flow at column outlet.

Hydrogen fuel gas - 19 psig on instrument regulator, as determined from optimization curve (Fig. 3) using test gas containing 100 ppm Methane in Helium.

Zero Air (<0.5 ppm CO) - 30 psig on instrument regulator, as determined from optimization curve (Fig. 4).

Attenuation factors - During calibration and standardization the GC attenuation setting was X2 to reduce base-line noise on the recorder; all other attenuation factors were X1 (Fig. 2). During actual auto emission tests it has been demonstrated that a total attenuation of X10 will be required to keep peaks within the limits of the graph paper.

Calculations:

Five consecutive tests were conducted to establish a field of data for calculations of counts per part per million (ppm) of component compounds and standard deviation values. (Fig. 2)

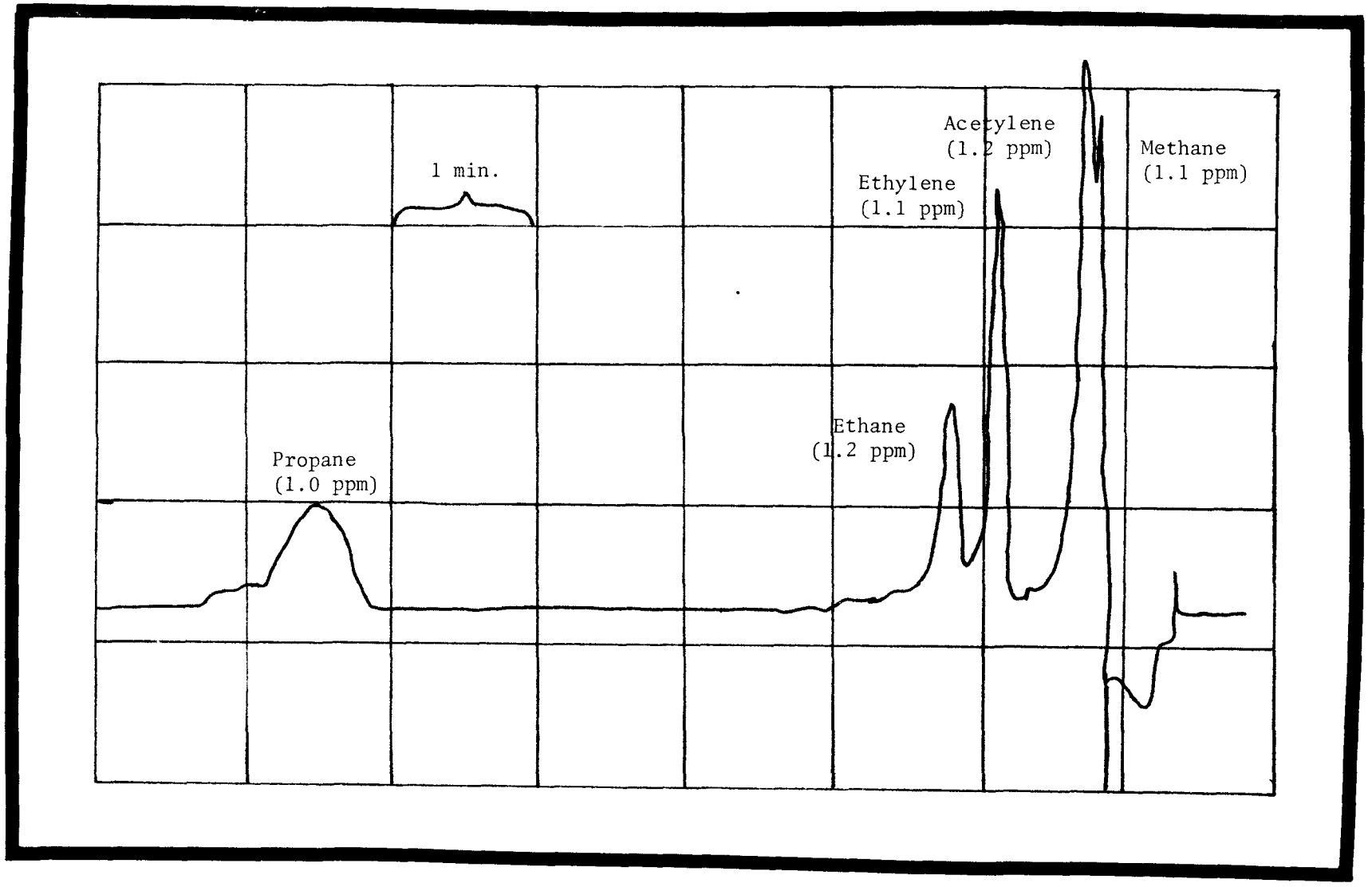

FIGURE 2 TYPICAL G.C. ANALYSIS FOR LIGHT HYDROCARBON MIXTURE

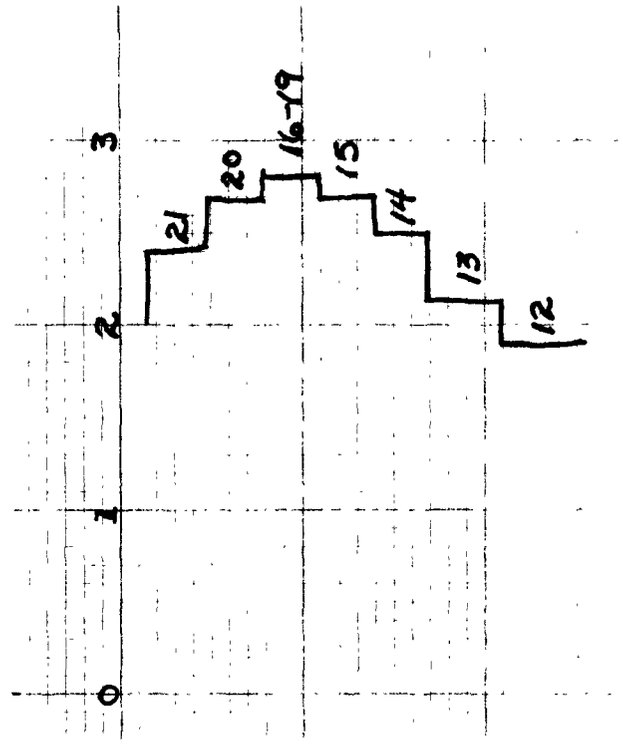

FIGURE 3 HYDROGEN OPTIMIZATION (SAMPLE GAS: 100 PPM METHANE IN HELIUM)

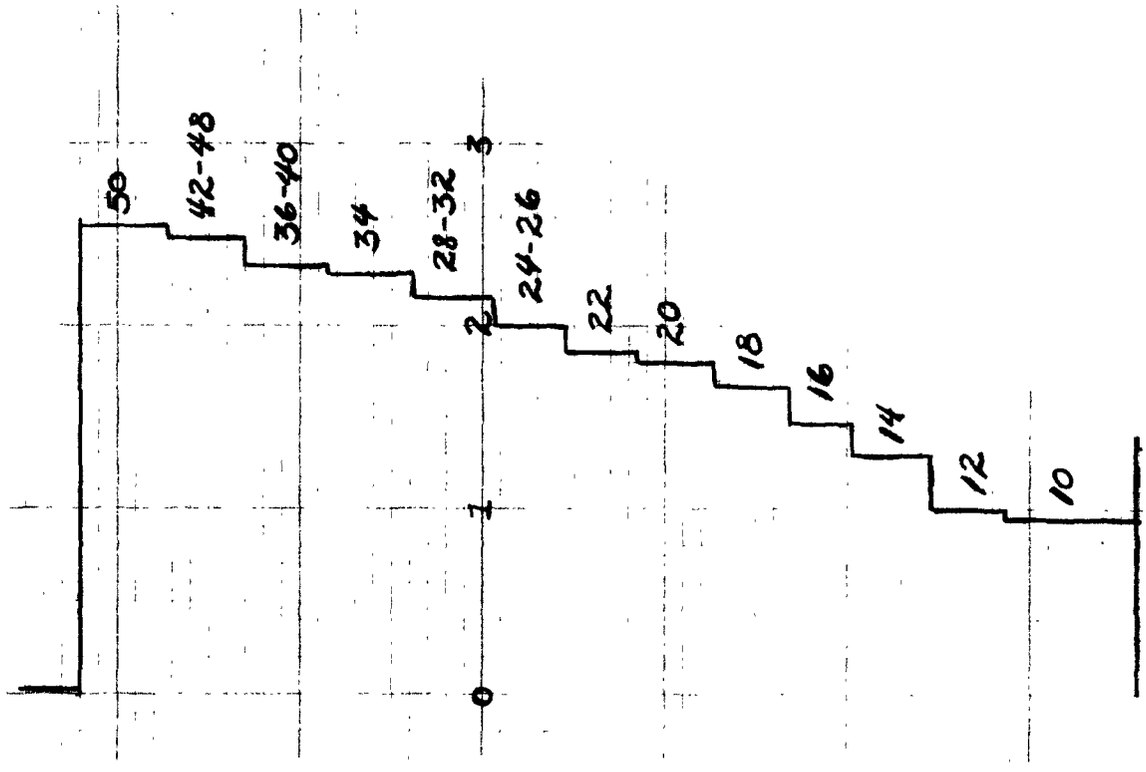

FIGURE 4 AIR OPTIMIZATION (SAMPLE GAS: 100 PPM METHANE IN HELIUM)

To calculate average counts:

$$\overline{X} = \frac{\Sigma X}{n}$$

where $\overline{X}$ = average count

ΣX = sum of test counts for a specific hydrocarbon

n = number of tests

Compound	$\overline{X}$
CH_4	4151.6
C_2H_2	7254.8
C_2H_4	4893.6
C_2H_6	2886.0
C_3H_8	3936.0

The following equation was used to calculate average counts per ppm:

$$\overline{C} = \frac{\overline{X}}{\text{ppm}}$$

(con. of st'd gas)

where $\overline{C}$ = average counts/ppm

Compound	$\overline{C}$
CH_4	3774.2
C_2H_2	6045.7
C_2H_4	4448.7
C_2H_6	2405.0
C_3H_8	3936.0

The standard deviation of the counts for each compound was calculated by:

$$S = \frac{\sqrt{n(\Sigma X^2) - (\Sigma X)^2}}{n(n-1)}$$

where S = standard deviation
X = sample values
n = number of samples

Compound	S Counts	S ppm
CH_4	$\pm 4.8989 \times 10^2$	$\pm 1.298 \times 10^{-1}$
C_2H_2	$\pm 1.3784 \times 10^2$	$\pm 2.280 \times 10^{-2}$
C_2H_4	$\pm 9.4868 \times 10$	$\pm 2.132 \times 10^{-2}$
C_2H_6	$\pm 1.1158 \times 10^2$	$\pm 4.640 \times 10^{-2}$
C_3H_8	$\pm 1.0548 \times 10^2$	$\pm 2.680 \times 10^{-2}$

To calculate Hydrocarbon Mass values:

$$HC_{mass} = V_{mix} \times \text{Density HC} \times \frac{HC_{conc}}{1{,}000{,}000}$$

where V_{mix} = Total dilute exhaust volume in ft^3 corrected to standard conditions (528°R and 760 mmHg)

$$V_{mix} = K_1 \times V_o \times N \times \frac{P_B - P_i}{T_p}$$

where $K_1 = \frac{528°R}{760 \text{ mmHg}} = 0.6947368$

V_o = volume of gas pumped/revolution

N = number of revolutions/sample

P_B = barometric pressure

P_i = inlet pressure differential

T_p = average temp. of gas at pump inlet in °R (°R = °R + 459)

where: $V_o = 0.36478 - 0.01153 \sqrt{\Delta P}$

ΔP = mmHg across the pump

where: P_i is measured in inches of H_2O

mmHg = 1.868 x inches H_2O

$\frac{HC_{conc}}{1,000,000}$ is the value of the individual Hydrocarbon component, e.g., Methane, as determined by Gas Chromatographic analysis. Density values are obtained from the "Handbook of Chemistry & Physics", 46th Edition (1965-66)

Compound	Density @ 20°C & 760 mmHg
Methane	6.7×10^{-4} gm/ml
Acetylene	1.08×10^{-3} gm/ml
Ethylene (Ethene)	1.17×10^{-3} gm/ml
Ethane	1.25×10^{-3} gm/ml
Propane	1.83×10^{-3} gm/ml

APPENDIX F

CERTIFICATE OF ANALYSIS

PRODUCT - INDOLENE H.O. MOTOR FUEL III

Batch No. 2 Date Tested 4-6-74 Tank No. 529

PRODUCT ANALYSIS

TEST	ASTM METHOD	SPECIFICATION CONTROL LIMIT	TEST RESULTS
API Gravity	D287	58.0-61.0	59.2
Distillation % F	D86		
Initial Boiling Point	D86	75-95	89
10% Evap.	D86	120-135	133
50% Evap.	D86	200-230	219
90% Evap.	D86	300-325	321
Maximum	D86	NMT 415	405
10% Slope	D86	NMT 3.2	2.9
Reid Vapor Pressure	D323	8.7-9.2	9.1
Oxidation Stability Minutes	D525	NLT 600	600+
GUM, mg/100 ml	D381	NMT 4.0	1.8
Lead Content gms/gal.	D526	Nil	0.001
Sulfur, Weight %	D1266	NMT 0.10	0.01
Olefin, %	D1319	NMT 10	5.1
Aromatic, %	D1319	NMT 35	29.8
Saturates, %	D1319	Remainder	65.1
Octane Research (Clear)	D2699	96.0-98.5	98.2
Octane Research (3cc TEL/gal)	D2699	NLT 103.0	104.8
Sensitivity (Clear)		7.0-10.5	10.9
Sensitivity (3cc TEL/gal)		NMT 9.0	9.8
Phosphorus, gms/gal	ACM 21.00	NMT 0.01	0.00

J. A. GRANT, Manager-Laboratory Services Division

per s/I. G. Dubeck

DATE: APRIL 10, 1974

TECHNICAL REPORT DATA
(Please read Instructions on the reverse before completing)

1. REPORT NO. EPA-460/3-74-014	2.	3. RECIPIENT'S ACCESSION NO. PB-224 316/AS
4. TITLE AND SUBTITLE A Study of Emissions from 1967-1974 Light-Duty Vehicles in Newark, New Jersey		5. REPORT DATE October 1974
		6. PERFORMING ORGANIZATION CODE
7. AUTHOR(S) A. R. Martin, L. M. Anstey, D. Seal		8. PERFORMING ORGANIZATION REPORT NO.
9. PERFORMING ORGANIZATION NAME AND ADDRESS General Environments Corporation 6840 Industrial Road Springfield, Virginia 22151		10. PROGRAM ELEMENT NO.
		11. CONTRACT/GRANT NO. 68-03-0389
12. SPONSORING AGENCY NAME AND ADDRESS Environmental Protection Agency Office of Mobile Source Pollution Control Office of Air and Waste Management Programs Ann Arbor, Michigan 48105		13. TYPE OF REPORT AND PERIOD COVERED Final
		14. SPONSORING AGENCY CODE
15. SUPPLEMENTARY NOTES		

16. ABSTRACT

General Environments Corporation (GEC) of Springfield, Virginia was selected to participate in the FY73 Emission Factors Program by the Environmental Protection Agency (EPA). One hundred eighty privately owned light-duty vehicles from the metropolitan Newark, New Jersey area were tested for exhaust emission levels of total hydrocarbons, carbon monoxide, carbon dioxide, oxides of nitrogen, light hydrocarbons, and aliphatic aldehydes according to the 1975 Federal Test Procedure. All vehicles were also tested for highway fuel economy and vehicles from 1972 through 1974 were tested for modal emissions. The test results were used to compute emission factors based on both the 1972 and 1975 Federal Test Procedures.

17. KEY WORDS AND DOCUMENT ANALYSIS

a. DESCRIPTORS		b. IDENTIFIERS/OPEN ENDED TERMS	c. COSATI Field/Group
Air Pollution Exhaust Emissions Automobiles Light-Duty Trucks Hydrocarbons Carbon Monoxide	Oxides of Nitrogen Gasoline Fuel Economy		13B

18. DISTRIBUTION STATEMENT UNLIMITED	19. SECURITY CLASS *(This Report)* UNCLASSIFIED	21. NO. OF PAGES 207
	20. SECURITY CLASS *(This page)* UNCLASSIFIED	22. PRICE

EPA Form 2220-1 (9-73)