CONTROL TECHNIQUES
FOR BERYLLIUM AIR POLLUTANTS

ENVIRONMENTAL PROTECTION AGENCY
Office of Air and Water Programs
Office of Air Quality Planning and Standards
Research Triangle Park, North Carolina 27711
February 1973

The AP series of reports is published by the Technical Publications Branch of the Information Services Division of the Office of Administration for the Office of Air and Water Programs, Environmental Protection Agency, to report the results of scientific and engineering studies, and information of general interest in the field of air pollution. Information reported in this series includes coverage of intramural activities and of cooperative studies conducted in conjunction with state and local agencies, research institutes, and industrial organizations. Copies of AP reports are available free of charge to Federal employees, current contractors and grantees, and nonprofit organizations – as supplies permit – from the Air Pollution Technical Information Center, Environmental Protection Agency, Research Triangle Park, North Carolina 27711, or from the Superintendent of Documents.

Publication No. AP-116

For sale by the Superintendent of Documents, U.S. Government Printing Office, Washington, D.C. 20402

PREFACE

This document contains information about the nature and control of a hazardous air pollutant – beryllium. The primary purpose is to provide information useful to those involved in the control of emissions of beryllium from industrial sources. The language and approach are largely technical, but the first two Sections should be of interest and value to the general reader.

The requirement to publish this document was established when the Administrator of the Environmental Protection Agency listed beryllium as a hazardous air pollutant by notice in the *Federal Register* (Vol. 36, pg. 5931) on March 21, 1971. The Administrator acted under the authority granted him by Section 112 of the Clean Air Act which defines a hazardous air pollutant as, "...an air pollutant to which no ambient air quality standard is applicable and which in the judgment of the Administrator may cause, or contribute to, an increase in mortality or an increase in serious irreversible, or incapacitating reversible, illness."

Messrs. J. F. Peoples, Jr., J. A. Desantis, and J. U. Crowder of the Office of Air and Water Programs, Environmental Protection Agency, were primarily responsible for compiling the information contained in this document. This information represents the efforts of the Environmental Protection Agency, as well as the advice of the members of the advisory committees listed on the following pages and the contributions of many individuals associated with other Federal agencies, State and local governments, and private businesses.

REGION VI LIBRARY
U. S. ENVIRONMENTAL PROTECTION
AGENCY
1445 ROSS AVENUE
DALLAS, TEXAS 75202

NATIONAL AIR POLLUTION CONTROL TECHNIQUES ADVISORY COMMITTEE

Chairman
Mr. Donald F. Walters
Office of Air and Water Programs
Office of Air Quality Planning and Standards
Environmental Protection Agency
Research Triangle Park, N.C. 27711

Mr. Raynal W. Andrews
150 Guyasuta Road
Pittsburgh, Pennsylvania 15215

Mr. Robert L. Chass
Air Pollution Control Officer
Los Angeles County Air
Pollution Control District
434 South San Pedro Street
Los Angeles, California 90013

Mr. Charles M. Copley, Jr.
Commissioner, Division of Air
Pollution Control
City of St. Louis
Room 419 City Hall
St. Louis, Missouri 63103

Mr. C. G. Cortelyou
Coordinator of Air and Water
Conservation
Mobil Oil Corporation
150 E. 42nd Street – Room 1650
New York, N.Y. 10017

Mr. Arthur R. Dammkoehler
Air Pollution Control Officer
Puget Sound Air Pollution
Control Agency
410 W. Harrison Street
Seattle, Washington 98119

Dr. Aaron J. Teller
Teller Environmental Systems, Inc.
295 Fifth Avenue
New York, N.Y. 10016

Mr. William W. Moore
President, Belco Pollution Control Corp.
100 Pennsylvania Avenue
Paterson, New Jersey 07509

Mr. William Munroe
Chief, Bureau of Air Pollution Control
State of New Jersey
Dept. of Environmental Protection
P.O. Box 1390
Trenton, New Jersey 08625

Mr. Vincent D. Patton
Executive Director
State of Florida Air and Water
Pollution Control
315 S. Calhoun Street
Tallahassee, Florida 32301

Dr. Robert W. Scott
Coordinator for Conservation Technology
Esso Research and Engineering Co.
P.O. Box 215
Linden, New Jersey 07036

Dr. R. S. Sholtes
University of Florida
Environmental Engineering Department
College of Engineering
Gainesville, Florida 32001

Mr. W. M. Smith
Director, Environmental Control
National Steel Corporation
Box 431, Room 159, General Office
Weirton, West Virginia 26062

Mr. George P. Ferreri
Chief, Division of Compliance
Bureau of Air Quality Control
Maryland State Department of
Health and Mental Hygiene
610 N. Howard Street
Baltimore, Maryland 21201

Mr. Benjamin F. Wake
Director, Division of Air Pollution
Control and Industrial Hygiene
Montana State Department of Health
Helena, Montana 59601

Mr. Charles M. Heinen
Executive Engineer
Materials Engineering
Chrysler Corporation
Box 1118, Dept. 5000
Highland Park, Michigan 48231

Mr. A. J. von Frank
Director, Air and Water
Pollution Control
Allied Chemical Corporation
P.O. Box 70
Morristown, New Jersey 07960

FEDERAL AGENCY LIAISON COMMITTEE

Chairman
Mr. Donald F. Walters
Office of Air and Water Programs
Office of Air Quality Planning and Standards
Environmental Protection Agency
Research Triangle Park, N.C. 27711

FEDERAL POWER COMMISSION

Mr. T. A. Philips
Chief, Bureau of Power
Federal Power Commission, Room 3011
411 G Street, N.W.
Washington, D.C. 20426

GENERAL SERVICES ADMINISTRATION

Mr. Harold J. Pavel
Director, Repair and Improvement Division
Public Building Service
General Services Administration
9th and D Streets, S.W.
Washington, D.C.

NATIONAL AERONAUTICS AND SPACE ADMINISTRATION

Mr. Ralph E. Cushman
Special Assistant
Office of Administration
National Aeronautics and Space Administration
Washington, D.C. 20546

NATIONAL SCIENCE FOUNDATION

Dr. O. W. Adams
Program Director for Structural Chemistry
Division of Mathematical and Physical Sciences
National Science Foundation
1800 G Street, N.W.
Washington, D.C. 20550

POSTAL SERVICE

Mr. Robert Powell
Assistant Program Manager
U.S. Postal Service
Room 4419
1100 L Street
Washington, D.C. 20260

DEPARTMENT OF TRANSPORTATION

Dr. Richard L. Strombotne
Office of the Assistant Secretary
for Systems Development and Technology
Department of Transportation
400 7th Street, S.W.
Washington, D.C. 20591

DEPARTMENT OF DEFENSE

Harvey A. Falk, Jr., Commander, USN
Office of the Assistant Secretary
of Defense
Washington, D.C. 20301

DEPARTMENT OF HOUSING AND URBAN DEVELOPMENT

Mr. Samuel C. Jackson
Assistant Secretary for Metropolitan Development
Department of Housing and Urban Development
Room 7100
7th and D Streets, S.W.
Washington, D.C. 20410

DEPARTMENT OF AGRICULTURE

Dr. Theodore C. Byerly
Assistant Director of Science and Education
Office of the Secretary
U.S. Department of Agriculture
Washington, D.C. 20250

DEPARTMENT OF COMMERCE

Dr. James R. McNesby
Room A361, Materials Building
National Bureau of Standards
Washington, D.C. 20234

DEPARTMENT OF THE TREASURY

Mr. Gerard M. Brannon
Director, Office of Tax Analysis
Room 4217 MT
Department of the Treasury
15th and Pennsylvania Avenue, N.W.
Washington, D.C. 20220

DEPARTMENT OF THE INTERIOR

Dr. LeRoy R. Furlong
Research Advisor to the Assistant Secretary
Office of Assistant Secretary – Mineral Resources
Bureau of Mines
Interior Building
Washington, D.C. 20240

DEPARTMENT OF HEALTH, EDUCATION, AND WELFARE

Dr. Douglas L. Smith
Department of Health, Education, and Welfare
National Institute of Occupational Health
Rockville, Maryland

TENNESSEE VALLEY AUTHORITY

Dr. F. E. Gartrell
Director of Environmental Research and Developme
Tennessee Valley Authority
715 Edney Building
Chattanooga, Tennessee 37401

ATOMIC ENERGY COMMISSION

Dr. Martin B. Biles
Director, Division of Operational Safety
U.S. Atomic Energy Commission
Washington, D.C. 20545

VETERANS ADMINISTRATION

Mr. Gerald M. Hollander, P.E.
Director of Architecture and Engineering
Office of Construction
Veterans Administration
Room 619 Lafayette Building
811 Vermont Avenue, N.W.
Washington, D.C. 20420

DEPARTMENT OF JUSTICE

Mr. Walter Kiechel, Jr.
Land and Natural Resources Division
Department of Justice
Room 2139
10th and Constitution Avenue, N.W.
Washington, D.C. 20530

DEPARTMENT OF LABOR

Mr. Robert D. Gidel
Deputy Director, Bureau of Labor Standards
Department of Labor
Room 401, Railway Labor Building
400 1st Street, N.W.
Washington, D.C. 20210

TABLE OF CONTENTS

Page

LIST OF FIGURES xi

LIST OF TABLES xiii

ABSTRACT xv

SUMMARY xvii

1. INTRODUCTION 1-1

1.1 REFERENCES FOR SECTION 1 1-2

2. BACKGROUND INFORMATION 2-1

2.1 DEFINITIONS 2-1

2.2 PHYSICAL AND CHEMICAL PROPERTIES OF BERYLLIUM 2-1
2.2.1 Physical Properties 2-1
2.2.2 Chemical Properties 2-2

2.3 ORIGINS AND USES OF BERYLLIUM 2-3

2.4 MAJOR SOURCES OF BERYLLIUM EMISSIONS 2-4

2.5 REFERENCES FOR SECTION 2 2-4

3. BERYLLIUM EMISSION SOURCES AND CONTROL TECHNIQUES 3-1

3.1 BERYLLIUM EXTRACTION PLANTS 3-1
3.1.1 Introduction 3-1
3.1.2 Extraction of Beryllium Hydroxide from Beryl Ore 3-1
3.1.3 Extraction of Beryllium Hydroxide from Bertrandite Ore 3-3
3.1.4 Conversion of Plant-Grade Beryllium Hydroxide 3-6
3.1.5 Beryllium Extraction Plant Emissions and Controls 3-10

3.2 *BERYLLIUM METAL, BERYLLIUM OXIDE, AND BERYLLIUM-COPPER* ALLOY MACHINE SHOPS 3-18
3.2.1 Machining and Emissions 3-18
3.2.2 Emission Control Techniques 3-18
3.2.3 Beryllium Fires 3-20

3.3 BERYLLIUM-COPPER FOUNDRIES 3-21
3.3.1 Foundry Operations and Emissions 3-21
3.3.2 Emission Control Techniques 3-22

3.4 MANUFACTURE OF BERYLLIUM CERAMIC PRODUCTS 3-22
3.4.1 Ceramic Production and Emissions 3-23
3.4.2 Emission Control Techniques 3-24

3.5 BERYLLIUM PROPELLANT MANUFACTURE, TESTING, AND DISPOSAL . 3-24
3.5.1 Propellant Manufacture 3-24
3.5.2 Beryllium-Rocket-Motor Static Test Firing 3-26
3.5.3 Disposal of Beryllium Propellant 3-27

3.6 DISPOSAL OF BERYLLIUM-CONTAINING WASTES 3-28
3.6.1 Process 3-28
3.6.2 Emissions 3-28
3.6.3 Control Techniques 3-28

3.7 REFERENCES FOR SECTION 3 3-29

4. COSTS OF BERYLLIUM EMISSION CONTROL 4-1

4.1 BERYLLIUM EXTRACTION PLANTS 4-1

4.2 BERYLLIUM METAL, BERYLLIUM OXIDE, AND BERYLLIUM-COPPER ALLOY MACHINE SHOPS 4-2

4.3 BERYLLIUM-COPPER ALLOY FOUNDRIES 4-4

4.4 MANUFACTURE OF BERYLLIUM CERAMIC PRODUCTS 4-4

4.5 BERYLLIUM PROPELLANT MANUFACTURE 4-6

4.6 REFERENCES FOR SECTION 4 4-8

APPENDIX: GAS-CLEANING DEVICES A-1

A.1 PREFILTERS A-1

A.2 FABRIC FILTERS A-3

A.3 HEPA FILTERS A-5

A.4 REFERENCES FOR APPENDIX A-9

SUBJECT INDEX I-1

LIST OF FIGURES

Figure *Page*

3-1 Sulfate Process for Conversion of Beryl Ore to Plant-Grade Beryllium Hydroxide 3-2

3-2 Fluoride Process for Conversion of Beryl Ore to Plant-Grade Beryllium Hydroxide 3-4

3-3 Hypothetical Plant Process for the Organophosphate Conversion of Bertrandite Ore to Beryllium Hydroxide 3-5

3-4 Conversion of Beryllium Hydroxide to Beryllium Metal Billets 3-7

3-5 Conversion of Beryllium Billets to Beryllium Metal Forms 3-8

3-6 Conversion of Plant-Grade Beryllium Hydroxide to Alloys 3-9

3-7 Conversion of Beryllium Hydroxide to Beryllium Oxide Powder and Ceramics 3-11

3-8 Types of Dry Mechanical Collectors Used by Beryllium Extraction Facilities 3-15

3-9 Types of Wet Collectors Used in Beryllium Production Plants 3-16

3-10 Types of Fabric Filters Used in Beryllium Production Plants 3-17

3-11 Unitized Fabric Tube Filter, Prefilter, and HEPA Filter for Beryllium or Beryllium Oxide Machining Facility 3-19

3-12 Unitized Multiple Dry Cyclone Collector, Prefilter, and HEPA Filter for Beryllium or Beryllium Oxide Machining Facility 3-20

3-13 Air Cleaning System for Beryllium or Beryllium Oxide Machine Shop Process and Ventilation Air Streams 3-21

3-14 Manufacture of Beryllium Oxide Ceramic Products 3-23

3-15 Configuration of Emission Control Devices for Beryllium Ceramic Plant 3-25

3-16 Emission Control Devices for Spray Dryer 3-25

3-17 Schematic Diagram of Rocket-Motor Test Cell 3-27

A-1 Group I, Viscous-Impingement-Panel Prefilter Installed at the Entrance to a Group II or Group III Prefilter A-1

A-2 Group II or Group III, Dry-Type, Extended-Medium Prefilter A-1

A-3 Sectional View of a Baghouse Using a Fabric Filter A-4

A-4 Construction of Open-Faced HEPA Filters A-6

A-5 Influence of Prefilter on Service Life of HEPA Filter A-8

A-6 Effect of Increased Filter Resistance on Service Life of HEPA Filter A-9

LIST OF TABLES

Table		*Page*
2-1	Physical Properties of Beryllium	2-2
2-2	Beryllium Minerals	2-3
2-3	Uses of Beryllium	2-3
2-4	World Production of Beryl	2-4
2-5	United States Imports of Beryl	2-5
3-1	Characterization of Beryllium Extraction Plant Emissions	3-12
3-2	Particulate Collection Equipment	3-13
3-3	Control Equipment and Collection Efficiencies for Beryllium Production Plants	3-14
3-4	Gas Cleaning Equipment for Beryllium and Beryllium Oxide Machine Shops	3-22
3-5	Sources of Beryllium Ceramic Plant Emissions	3-24
4-1	Emission Control Costs for Conversion of Ore to Beryllium Hydroxide by Sulfate Process	4-2
4-2	Emission Control Costs for Conversion of Ore to Beryllium Hydroxide by Fluoride Process	4-3
4-3	Emission Control Costs for Conversion of Bertrandite Ore To Beryllium Hydroxide	4-4
4-4	First Example of Emission Control Costs for Conversion of Beryllium Hydroxide to Beryllium Billets	4-5
4-5	Second Example of Emission Control Costs for Conversion of Beryllium Hydroxide to Beryllium Billets	4-6
4-6	Emission Control Costs for Conversion of Beryllium Billets to Beryllium Metal Forms	4-7

4-7 Emission Control Costs for Conversion of Beryllium Hydroxide to Beryllium Alloys 4-7

4-8 Emission Control Costs for Conversion of Beryllium Hydroxide to Beryllium Oxide and Ceramics 4-8

4-9 Emission Control Costs for Beryllium Machine Shop 4-9

4-10 Emission Control Costs for Beryllium-Copper Alloy Foundry 4-9

4-11 Emission Control Costs for Beryllium Ceramic Manufacturing Plant 4-9

A-1 Efficiencies of Prefilters A-2

A-2 Fractional Efficiencies of Prefilters A-2

A-3 Operating Parameters of Prefilters A-2

A-4 Specifications and Operating Parameters for Fabric Filter Installations to Control Secondary Beryllium Emissions A-6

A-5 Nominal Specifications of Standard HEPA Filters A-6

A-6 Recommended Limiting Service Temperatures for Steel-Framed, Fire-Resistant HEPA Filter Units Sealed with Elastomeric Adhesives A-7

A-7 Recommended Limiting Service Temperatures for Wood-Framed, Fire-Resistant HEPA Filter Units A-7

A-8 Shock Overpressure Resistance of Open-Face HEPA Filters A-8

ABSTRACT

Beryllium in almost all forms is known to have adverse effects upon human health. Concentrations as large as 0.01 microgram per cubic meter of air over a 30-day period have been determined to be safe for nonoccupational exposures. Properties of beryllium such as high strength-to-weight ratio, high modulus of elasticity, and low coefficient of thermal expansion make it ideally suited for many aerospace and precision instrument applications. It is also utilized as an alloying constituent in other metals, most extensively with copper, to induce improvements in physical properties. The oxide of beryllium is used as a high-temperature ceramic. Domestically, approximately 300 facilities either extract beryllium or manufacture beryllium-containing products. Beryllium extraction processes generate atmospheric emissions that include beryllium salts, acids, beryllium oxide, and other beryllium compounds in the form of dust, fume, or mist. Facilities engaged in processing beryllium-containing materials into finished products generate a more restricted range of emissions, including beryllium dust from machine shops, beryllium oxide dust from ceramic production, and beryllium-containing dust and fume from beryllium-copper foundry operations. Beryllium emissions can be controlled by the following classes of gas-cleaning equipment: prefilters, dry mechanical collectors, wet collectors, fabric filters, and high-efficiency particulate air filters (HEPA filters). The choice of specific control equipment is governed by process variables, effluent properties, and economics. In most cases, emission control costs, including capital investment, operating and maintenance costs, and capital charges, do not exceed 10 to 15 percent of the cost of manufacturing equipment. Beryllium-contaminated waste can be buried at controlled disposal sites unless it presents an explosion hazard. Beryllium propellant and other hazardous beryllium-contaminated wastes can be disposed of by controlled incineration or detonation employing appropriate emission control devices. An appendix to this document presents descriptions of geometrical configurations and performance characteristics of filters and presents examples of specific design parameters and operational features of filters in use in beryllium machine shops and foundries.

Key words: beryllium, emissions, control techniques, gas-cleaning devices, costs

SUMMARY

Beryllium in almost all forms is known to have adverse effects upon human health. Beryllium concentrations as large as 0.01 microgram per cubic meter of air, averaged over a 30-day period, have been determined to be safe for nonoccupational exposures.

Approximately 300 facilities that either extract beryllium or manufacture beryllium-containing products are the major domestic users of beryllium. Processing operations and characteristics of potential emissions vary widely among the various types and methods of product manufacture. The principal sources of atmospheric beryllium emissions that can potentially cause dangerous concentrations of beryllium in the ambient air are presently believed to be those listed below when the operations employ beryllium or a beryllium-containing material:

1. Extraction plants.
2. Ceramic plants.
3. Foundries.
4. Machine shops.
5. Propellant plants.
6. Incinerators.
7. Rocket-motor test facilities.
8. Open burning sites for waste disposal.

Other sources of beryllium emissions are known, but present information does not indicate that dangerous ambient concentrations of beryllium are likely to result from such sources.

BACKGROUND INFORMATION

Beryllium is one of the lightest commercially used metals. Properties such as high strength-to-weight ratio, high modulus of elasticity, and low coefficient of thermal expansion make this metal ideally suited for many aerospace and precision instrument applications. The metal is protected by the formation of an oxide coating that resists further oxidation below 400° Celsius. Beryllium is also utilized as an alloying constituent in other metals to induce improvements in physical properties; the most extensive use of beryllium in alloys is with copper. The oxide of beryllium (BeO) has unique properties that have resulted in its use as a high-temperature ceramic.

Beryllium is widely distributed in the crust of the earth, but it rarely exists in a concentrated form economically suitable for mining. Presently, beryl and bertrandite are the only beryllium-containing ores mined for their beryllium content. The majority of beryl ore processed in the United States is imported, and the only large-scale domestic mine produces bertrandite ore.

BERYLLIUM EMISSION SOURCES AND CONTROL TECHNIQUES

The production of beryllium, beryllium oxide, and beryllium-copper alloy constitutes the main source of beryllium-containing materials, which are fabricated into a wide variety of products. Three basic processes are employed to prepare beryllium hydroxide, which is subsequently converted into the desired product of metal, oxide, or alloy. These latter beryllium-containing materials are further processed into finished products at extraction plants or are sold to other facilities for processing or fabrication into finished products.

The beryllium extraction process generates atmospheric emissions with various physical states and chemical compositions. Emissions include beryllium salts, acids, beryllium oxide, and other beryllium compounds in the form of dust, fume, or mist. In contrast, those facilities engaged in the processing of specific

forms of beryllium-containing materials into finished products generate a more restricted range of beryllium and beryllium compounds in emissions. Examples of these emissions are beryllium dust generated by shops which machine beryllium, beryllium oxide dust generated during ceramic production, and beryllium-containing fumes and dusts produced by beryllium-copper foundry operations.

Beryllium emissions can be controlled by the following classes of gas-cleaning equipment:

1. Prefilters of the viscous impingement and dry extended-medium types.
2. Dry mechanical collectors.
3. Wet collectors.
4. Fabric filters.
5. High efficiency particulate air filters (HEPA filters).

The choice of specific control equipment is governed by process variables, effluent properties, and economics.

Dry cyclones and fabric filter collectors in series are commonly used to control beryllium emissions generated during ore handling operations such as crushing and milling. The wet chemical beryllium extraction processes employ wet collectors, such as venturi and packed-tower scrubbers.

Beryllium foundries and machine shops utilize dry cyclones, fabric filters and, in some cases, HEPA filters. Beryllium ceramic plants and propellant plants usually operate series arrangements of prefilters and HEPA filters.

Emission controls for beryllium-rocket-motor test facilities are in a state of development. Present applications of high-energy scrubbers and HEPA filters have been moderately successful in controlling emissions from the combustion of limited quantities of rocket propellant. Further development of control systems is necessary to adequately control emissions from the combustion of larger quantities of propellant.

The disposal of some beryllium-contaminated wastes can be accomplished by burying at controlled disposal sites. Scrap beryllium propellant should not be buried, however, because of its explosive nature. One method of propellant disposal involves detonation in an underground chamber and subsequent filtering of exhaust gases through HEPA filters.

COSTS OF BERYLLIUM EMISSION CONTROL

Emission control costs can be divided into three categories:

1. Capital investment.
2. Operating and maintenance costs.
3. Capital charges

The installed costs of emission control equipment include expenditures for:

1. Control hardware.
2. Auxiliary equipment.
3. Clarifiers and liquid treatment systems.
4. Insulation material.
5. Transportation of equipment.
6. Site preparation.
7. Erection.

In most cases, the cost of equipment necessary to effectively control beryllium emissions does not exceed 10 to 15 percent of the cost of manufacturing equipment.

GAS CLEANING DEVICES

Brief descriptions of geometrical configurations and performance characteristics of prefilters, fabric filters, and HEPA filters are presented in an appendix. Examples of specific design parameters and operational features of fabric filters that are in use in beryllium machine shops and foundries are shown.

CONTROL TECHNIQUES FOR BERYLLIUM AIR POLLUTANTS

1. INTRODUCTION

Control Techniques for Beryllium Air Pollutants is issued in accordance with Section 112 (b) (2) of the Clean Air Amendments of 1970.[1]

Beryllium in almost all forms is known to have adverse effects upon human health. Beryllium concentrations as large as 0.01 microgram per cubic meter of air, averaged over a 30-day period, have been determined to be safe for nonoccupational exposures.

The primary extraction of beryllium, the alteration of beryllium-containing products by various physical and chemical processes, and the end use and disposal of beryllium-containing materials can generate atmospheric beryllium emissions. Such emissions occur as dust, fume, and mist.

Beryllium extraction plants, machine shops, foundries, ceramic plants, propellant plants, incinerators, beryllium-rocket-motor test facilities, and open burning sites for the disposal of beryllium-containing wastes are major potential sources of airborne beryllium. Other sources of beryllium emissions, such as combustion of coal and oil, beryllium ore mining, and movement and stockpiling of beryllium material, are known; however, it has not been demonstrated that these sources generate dangerous concentrations of beryllium in ambient air. Approximately 300 facilities in the United States comprise the major users of beryllium, but the total number of facilities that process or use material containing beryllium may be in the thousands.

This report discusses the application of gas-cleaning equipment to the control of beryllium emissions. Many of these control devices, methods, and principles have been developed and operated over many years. They are recommended as the techniques generally applicable to the control of emissions during processing of beryllium-containing materials. Brief descriptions of processes and the classes, types, efficiencies, installed costs, and annual operating costs of accompanying control equipment are included. Disposal practices for beryllium scrap and solid waste generated by various industrial processes are briefly discussed with reference to emission control.

Scrubbers, packed towers, chemical wet collectors, and wet cyclones are used to control emissions from wet-chemical processes in the primary extraction of beryllium. Cyclones, fabric filter units, and a variety of prefilter and high efficiency particulate air (HEPA) filters are common control devices for dry operations, and for some wet operations not associated with beryllium extraction. (The Appendix to this document presents descriptions of geometric configurations and performance characteristics of filters and presents examples of specific design para-

meters and operational features of filters in use in beryllium machine shops and foundaries.)

Regardless of the type and size of beryllium operation, emission control equipment capable of maintaining ambient concentrations of beryllium below 0.01 microgram per cubic meter of air is readily available. Numerous measurements of beryllium concentrations in ambient air near emission sources are available, but data on stack emissions of beryllium are generally lacking.

The methodology used for estimating installed costs and annual operating costs of gas-cleaning equipment follows that used in *Control Techniques for Particulate Air Pollutants.*[2] Costs have been adjusted to February 1972. It is not the purpose or intent of this report to provide specific costs for installing or operating gas-cleaning equipment for particular plants and processes, especially since several alternative control systems can serve equally well for a given emission control situation. However, the estimating procedure can produce total installed-equipment costs that are accurate to within ±50 percent when reasonably detailed requirements of a specific installation are known.

1.1 REFERENCES FOR SECTION 1

1. Clean Air Amendments of 1970. U.S. Environmental Protection Agency. Washington, D.C. Publication No. P.L. 91-604. December 31, 1970.

2. Control Techniques for Particulate Air Pollutants, U.S. Department of Health, Education, and Welfare, National Air Pollution Control Administration. Washington, D.C. NAPCA Publication No. AP-51. January 1969. p. 159-166.

2. BACKGROUND INFORMATION

2.1 DEFINITIONS

The following definitions apply to terms that are used in this document:

Beryllium—The element beryllium, excluding any associated elements.

Extraction plant—A facility that chemically processes beryllium ore to beryllium metal, alloys, or oxide, or that performs any of the intermediate steps in these processes.

Beryllium ore—Any material that is mined, hand cobbed, or gathered in any way solely for its beryllium content.

Machine shop—A facility that performs cutting, grinding, turning, honing, milling, deburring, lapping, electrochemical machining, etching, or other similar operations on beryllium metal, alloys, or oxide.

Ceramic plant—A manufacturing plant that produces ceramic items or stock forms from beryllium oxide.

Foundry—A facility engaged in the melting or casting of beryllium metal or alloys.

Propellant—A fuel and oxidizer that are physically or chemically combined and that undergo combustion to provide rocket propulsion.

Beryllium alloy—Any metal to which beryllium is deliberately added to enhance the properties of the metal.

Propellant plant—Any facility engaged in the mixing, casting, or machining of propellant that contains beryllium.

Dust—Solid particles predominantly larger than collodial size and capable of temporary suspension in air or other gases. Derivation from larger masses of material through the application of physical force is usually implied.

Fume—Particles formed by condensation, sublimation, or chemical reaction, of which the predominant part, by weight, consists of particles smaller than 1 micron in diameter. Condensed metal oxides are examples of fume.

Mist—A low-concentration dispersion of relatively small, liquid droplets.

Rocket-motor-test site—Any building, structure, or installation where the static test firing of a beryllium-containing rocket motor or the disposal of beryllium propellant is conducted.

2.2 PHYSICAL AND CHEMICAL PROPERTIES OF BERYLLIUM

2.2.1 Physical Properties

Beryllium has a density of 1.85 grams per cubic centimeter and is one of the lightest metals. It is less dense than either aluminum or titanium and is slightly more dense than magnesium. Beryllium has a very high strength-to-weight ratio and a modulus of elasticity (36,000,000 to 44,000,000 pounds per square inch) which exceeds that of aluminum, magnesium, or steels. In addition to these properties that make beryllium advantageous for use in precision structural components, it also possesses unique properties rarely encountered in other materials of a similar nature. It has a permeability to x-rays that is seventeen times greater than that of aluminum. This property, in combination with others, makes beryllium ideally suited for x-ray windows and makes longer wave x-rays possible.[1] In addition, beryllium is one of the few elements that is suitable as a moderator in a nuclear-fission reaction.

Because beryllium is relatively expensive, its use is limited to specific applications that require its unique properties. Table 2-1 is a list of the physical properties of beryllium.[1] The values cited in this table vary slightly

Table 2-1. PHYSICAL PROPERTIES OF BERYLLIUM[1]

Property	Value
Atomic number	4
Atomic weight	9.0133
Melting point, °C	1,283
Boiling point, °C	2,970
Specific gravity at 4°C, g/cm^3	1.85
Crystal system	Hexagonal (close packed)
Lattice constant, Å	a = 2.286 c = 3.584
Latent heat of fusion, cal/g	250 to 275
Coefficient of linear expansion, μin./(in.) (°C)	
25° to 200°C	11.5
200° to 800°C	17.4
Electrical conductivity, % International Annealed Copper Standard (IACS)	40 to 45
Specific heat, cal/(g) (°C)	
0°C	0.41
100°C	0.50
800°C	0.71
Thermal conductivity, cal/(sec)(cm^2)(°C/cm)	
0°C	0.440
100°C	0.404
800°C	0.192
Reflectivity (white light), %	55
Sound transmission velocity, m/sec	12,600

from other published values; this is probably due to purity differences in the samples tested.

When beryllium is incorporated in certain metals, alloys that can be precipitation hardened are produced.[2] For example, the following properties are improved when beryllium is added to copper:

1. Hardness.
2. Tensile strength.
3. Fatigue resistance.
4. Corrosion resistance.
5. Elasticity.

The beryllium content of most alloys is between 2 and 4 percent, but in some cases is as low as 0.0042 percent.[3] Adding small amounts of beryllium to numerous different metals can produce significant changes in both physical and chemical properties, for example, improved resistance to surface oxidation, increased hardness, and increased strength.

2.2.2 Chemical Properties

At ambient temperatures, beryllium is stable in a dry atmosphere but will slowly oxidize if moisture is present. As the temperature increases, beryllium begins to form a highly protective oxide coating which inhibits further oxidation. However, with further increases in temperature, the oxide layer increases, faults begin to occur, and flaking destroys the protective coating at approximately 700° to 800° Celsius.[1,4]

At elevated temperatures, beryllium also reacts with carbon monoxide, carbon dioxide, and water vapor. In all of these reactions, a protective oxide coating is formed that has characteristics that differ from those of the coating formed by a reaction with oxygen. The oxide coating formed during reaction with carbon monoxide becomes nonprotective at a temperature approximately 100° Celsius lower than that at which the coating formed during the reaction with oxygen becomes nonprotective. In contrast, oxidation by carbon dioxide is protective at higher temperatures; the protective characteristics of oxidation by chemical reaction with water vapor lie between those of carbon monoxide and oxygen.

The oxide of beryllium has unique properties. Its high melting point (225°Celsius), sinterability, high heat conductance, and high electrical resistivity make it an ideal high temperature ceramic for many applications. Unlike most metal oxides, the heat conductance of beryllium oxide exceeds that of the metal itself.

Beryllium is reactive with sulfuric acid, hydrochloric acid, and dilute nitric acid. It dissolves in hot alkali to form beryllates. When contained in beryl ore, beryllium is very resistant to acid attack; the ore requires pretreatment to increase its reactivity so that an acid extraction can be performed. The basic chemical processes for the extraction of beryllium from beryl ore are discussed in Section 3.1.

2.3 ORIGINS AND USES OF BERYLLIUM

Beryllium is widely distributed in the earth's crust, but rarely in deposits of sufficiently high concentration to make extraction of beryllium economically feasible. Table 2-2 lists minerals which contain beryllium. At present, only beryl and bertrandite ores are commercially mined for their beryllium content.

Table 2-2. BERYLLIUM MINERALS[3]

Mineral	Formula
Beryl	$3BeO \cdot Al_2O_3 \cdot 6SiO_2$
Beryllonite	$NaBePO_4$
Bertrandite	$Be_4Si_2O_7(OH)_2$
Bromellite	BeO
Chrysoberyl	$Be(AlO_2)_2$
Euclase	$BeHAlSiO_5$
Hambergite	$Be_2(OH)BO_3$
Helvite	$Mn_4Be_3Si_3O_{12}S$
Herderite	$CaBePO_4(OH,F)$
Leucophanite	$(Ca, Na)_2 BeSi_2 (O,OH,F)$
Phenacite	Be_2SiO_4

The United States government, the major domestic user of beryllium, uses beryllium primarily for aerospace and nuclear applications. There are numerous similar applications (Table 2-3) where beryllium is employed because of its unique characteristics.

Table 2-3. USES OF BERYLLIUM

Form	Use
Beryllium metal	Nuclear applications Gyroscopes Accelerometers Inertial guidance systems Rocket propellants Aircraft brakes Heat shields for space capsules Portable x-ray tubes Optical applications Turbine rotor blades Mirrors Missile systems Nuclear weapons
Beryllium-copper alloy	Springs Bellows Diaphragms Electrical contacts Aircraft engine parts Welding electrodes Nonsparking tools Bearings Precision castings High-strength, current-carrying springs Fuse clips Gears
Beryllium oxide	Spark plugs High-voltage electrical components Rocket-combustion-chamber liners Inertial guidance components Laser tubes Electric furnace liners Microwave windows Ceramic applications

Production data for beryl ore in the United States are not published. However, data do exist for the world production of beryl ore (Table 2-4).[5] The United States does not rank among the world's largest

Table 2-4. WORLD PRODUCTION OF BERYL[5]
(Short tons)

Country	1967	1968	1969[a]
Argentina	296	654	570[b]
Australia	62	17	-
Brazil	1,444[c]	2,291[c]	3,100[b]
Congo (Kinshasa)	2	-	160
India	1,435[d]	1,432[b]	1,433
Kenya	19	8	3
Malagasy Republic	33	85	80
Mozambique	186	104	135
Portugal	15	140	30
Rhodesia, Southern	47[e]	97[f]	100[b]
Rwanda	120	163	276
South Africa, Republic of	114	340	345
Uganda	346[f]	398	316
U.S.S.R [b]	1,323	1,322	1,378
United States (mine shipments)	W[g]	168	W[g]
Total[h]	5,442[f]	7,219	7 926

[a]Preliminary

[b]Estimate.

[c]Exports

[d]Exports to United States as reported by Indian Department of Atomic Energy.

[e]U.S. imports.

[f]Revised.

[g]Withheld to avoid disclosing confidential company data.

[h]Totals are of listed figures only

producers of beryl ore; however, a comparison of world production figures with U.S. import figures in Table 2-5 shows that U.S. imports of beryl ore account for a large portion of world production.[5]

Numerous small-scale mining operations exist in the United States in areas that contain concentrated forms of beryllium ore. The mines are usually small open pits or shallow underground workings. Beryl is usually concentrated by hand sorting, and bertrandite or mixtures of bertrandite and beryl are in some cases enriched near the mine by flotation processes. The contribution of these mines is estimated to be less than 10 percent of the beryl ore processed in the United States.

Only one large beryllium ore mine is currently in operation in the United States; the ore is mainly a hydrated bertrandite.

2.4 MAJOR SOURCES OF BERYLLIUM EMISSIONS

The following sources, when engaged in processes or operations involving beryllium, are thought to be the most significant sources of beryllium emissions:

1. Extraction plants.
2. Ceramic manufacturing plants.
3. Foundries.
4. Machining facilities.
5. Propellant manufacturing plants.
6. Incinerators.
7. Rocket-motor-test sites.
8. Open burning sites for waste disposal.

In addition, the emission of beryllium to the atmosphere can occur during the mining of beryllium ores; the improper transportation of beryllium, beryllium compounds, or wastes contaminated with either; and the burning of coal or oil containing trace amounts of beryllium. Quantitative data on the magnitude and frequency of these types of emissions are not yet available. However, no known data indicate instances of dangerous concentrations of beryllium in the atmosphere from such sources.

2.5 REFERENCES FOR SECTION 2

1. Schwenzfeier, C. W., Jr. Beryllium and Beryllium Alloys. In: Kirk-Othmer Encyclopedia of Chemical Technology (Vol. 3). Standen, A. (ed.). New York, John Wiley and Sons, Inc., 1964. p. 451.

2. Trends in Usage of Beryllium and Beryllium Oxide. National Research Council. Washington, D. C. Materials Advisory Board Report MAB-238. February 1968. p. 1.

3. Krejci, L. E. and L. D. Scheel. The Chemistry of Beryllium. In: Beryllium – Its Industrial Hygiene Aspects. Stokinger, H. E. (ed.). New York, Academic Press, Inc., 1966. p. 47, 99.

4. Songina, O. A. Beryllium. In: Rare Metals. Washington, D. C., Israel Program for Scientific Translations Ltd., 1971. p. 322.

Table 2-5. UNITED STATES IMPORTS OF BERYL[5]

Customs district	Country of origin	1968 Volume, short tons	1968 Value, $	1969 Volume, short tons	1969 Value, $
Philadelphia	Angola	-	-	17	7,000
	Argentina	549	214,000	600	227,000
	Australia	124	53,000	13	6,000
	Bolivia	15	5,000	-	-
	Brazil	1,600	579,000	4,098	1,695,000
	Burundi & Rwanda	176	60,000	143	55,000
	Congo	-	-	70	27,000
	Kenya	56	12,000	44	19,000
	Malagasy Republic	52	16,000	78	27,000
	Malaysia	-	-	11	4,000
	Mozambique	140	88,000	69	30,000
	Portugal	67	29,000	94	44,000
	Rhodesia, Southern	97	32,000	-	-
	South Africa	359	131,000	691	308,000
	Spain	23	7,000	3	1,000
	Tanzania	-	-	22	9,000
	United Kingdom	-	-	6	2,000
	Uganda	398	129,000	295	117,000
	Zambia	3	1,000	-	-
	Total	3,659	1,356,000	6,254	2,578,000
New York City	Australia	31	11,000	-	-
	Brazil	99	34,000	-	-
	Burundi & Rwanda	-	-	22	8,000
	South Africa	-	-	12	5,000
	Uganda	33	12,000	-	-
	Total	163	57,000	34	13,000
Baltimore	Brazil	-	-	40	19,000
	Mozambique	-	-	27	12,000
	Uganda	-	-	67	26,000
	Total	-	-	134	57,000
Grand Total		3,822	1,413,000	6,422	2,648,000

5. Eilertsen, D. C. Beryllium. In: Minerals Year Book 1969; Vol. I-II, Metals, Minerals, and Fuels. Schreck, A. E. (ed.). U.S. Department of the Interior, Bureau of Mines. Washington, D. C. 1971. p. 216-217.

3. BERYLLIUM EMISSION SOURCES AND CONTROL TECHNIQUES

3.1 BERYLLIUM EXTRACTION PLANTS

3.1.1 Introduction

Beryllium extraction plants manufacture the following classes of materials and products: (1) beryllium: powders, pressed blocks, mill products, fabricated products; (2) beryllium oxide: powders, ceramic shapes, ceramic wares, fabricated products; and (3) beryllium alloys: cast billets, mill products, fabricated products.

Beryllium extraction plants produce beryllium powders and metals of at least 95 percent purity. The beryllium metal products are made almost entirely from pressed powder and are forged, extruded, formed, and machined. Beryllium oxide (beryllia) powders of various qualities are pressed, extruded, fired, and machined by conventional ceramic techniques. Alloy products, mainly the types with small percentages of beryllium in copper, are produced from melts of copper and master (4 percent) alloy. The products include rods, bars, plates, wires, strips, forgings, and billets. Beryllium is also alloyed with nickel and with aluminum.

Primary beryllium extraction plants process beryllium in all forms, from ores to intermediate commercial products to end items. In 1968, the production of beryllium in all forms totaled about 348 tons.[1] The production of beryllium fluctuates widely from year to year in response to the market demand, and no long-term trend is discernible.

There are three basic processes in commercial use for extracting beryllium from beryllium ore. The sulfate process and the fluoride process recover beryllium from beryl ore, whereas the remaining process uses bertrandite ore. All of the processes extract beryllium from ore in the form of beryllium hydroxide. The hydroxide is then converted to the desired product of beryllium oxide, beryllium metal, or beryllium-copper alloy.

Only four domestic facilities either extract beryllium from ore or process beryllium into beryllium oxide, beryllium-copper alloy, and beryllium metal billets. One installation ships its entire beryllium hydroxide production to a second facility for further processing, together with additional beryllium hydroxide produced at the latter facility. A third extraction installation performs additional processing of beryllium hydroxide onsite and also ships beryllium hydroxide to the fourth installation, which does not carry out extraction operations.

3.1.2 Extraction of Beryllium Hydroxide from Beryl Ore

3.1.2.1 Sulfate Process

Figure 3-1 is a flow diagram for the sulfate process. The atmospheric emission control equipment, discussed in Section 3.1.5.2, is also shown.

In the treatment of beryl ore by the sulfate process, crushed beryl ore is first melted in an electric furnace at about 1650° Celsius. It is then poured through a high-velocity cold water jet; the quenched material, in frit form, is screened, heat-treated in a rotary kiln to increase its reactivity, and dry-ground to minus 200 mesh. Weighed batches of this material are mixed with concentrated sulfuric acid to form a smooth slurry, which is pumped into a sulfating reactor regulated to 300° Celsius. Beryllium sulfate, aluminum sulfate, and silica are thus formed from the ore.

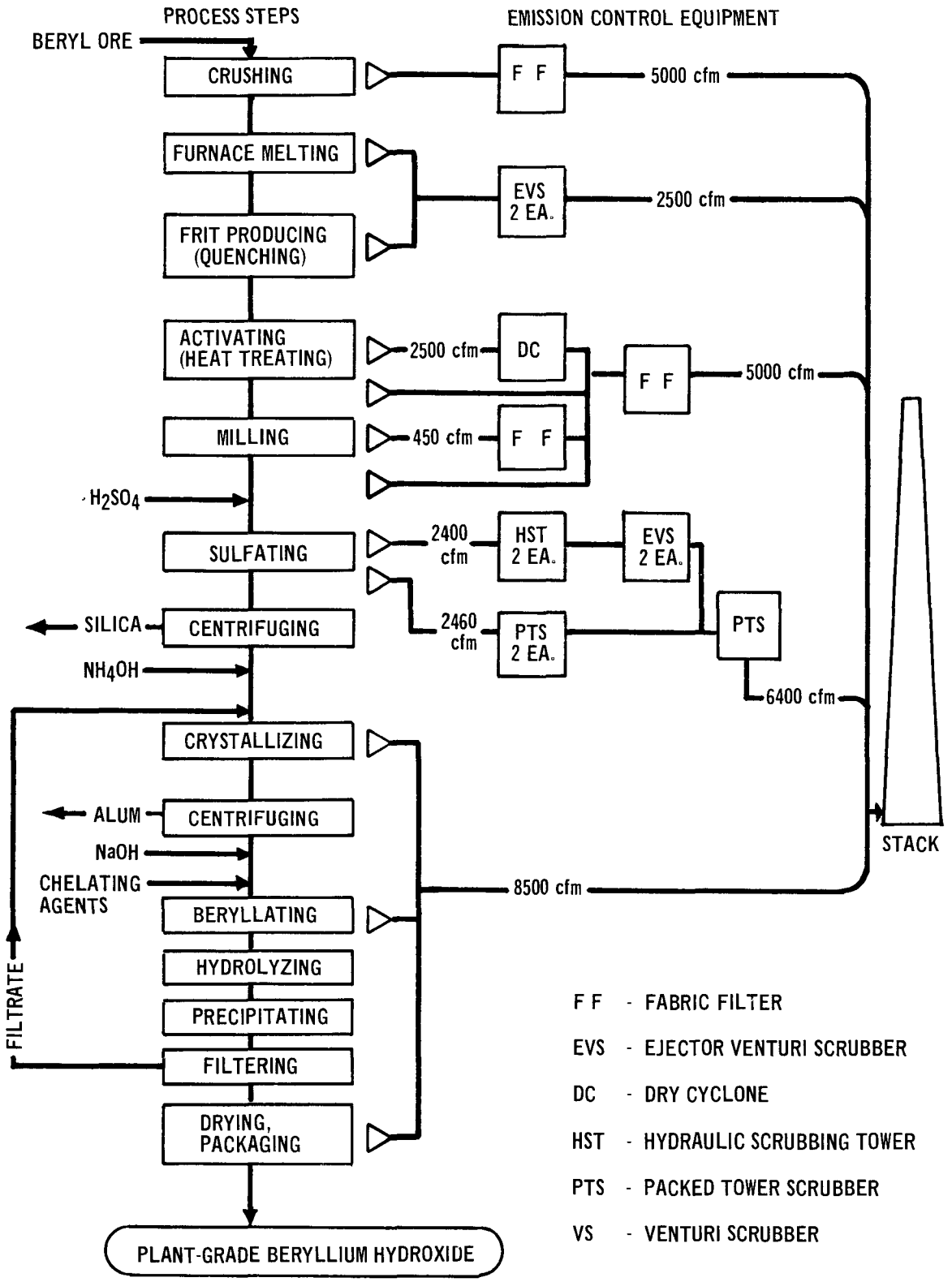

Figure 3-1. Sulfate process for conversion of beryl ore to plant-grade beryllium hydroxide.

In a continuous process, water is added for leaching, and silica is removed from the sulfate liquor by centrifuging. Ammonium hydroxide is added to the liquor, and ammonium alum is crystallized from solution and removed by centrifuging. The liquor is continuously proportionated with the chelating agent EDTA (ethylenediaminotetraacetic acid, for solubilizing impurities) and with dilute sodium hydroxide as it is fed into a water-cooled "beryllating" reactor. The sodium beryllate solution formed is tranferred to a hydrolyzer where it is held at boiling to precipitate a granular-form beryllium hydroxide from the solution. The slurry is then centrifuged, and the liquid portion is recycled to the alum crystallization step. The product, plant-grade beryllium hydroxide, is packaged in steel drums to await conversion to beryllium metal, alloy, or ceramic material.

3.1.2.2 Fluoride Process

Figure 3-2 is a flow diagram of the fluoride process. Included in this diagram are the atmospheric emission control devices, which are discussed in Section 3.1.5.2. It should be noted that similar control methods are incorporated in all of the extraction processes discussed in this chapter.

In the treatment of beryl ore by the fluoride process, crushed beryl ore is ground in a ball mill to minus 200 mesh and then mixed with powdered sodium silicofluoride, soda ash, water, and oil in a mix muller. This blend is briquetted, and the briquettes are fed continuously to a rotary hearth gas-electric furnace for sintering at 760° Celsius. The sintered briquettes are crushed and ground to minus 100 mesh in vibratory ball mills. The ground sinter is slurried in water and is progressively thickened and hot-water-leached through four stages. Ammonium persulfate is added to precipitate impurities, which are removed by filtration of the sodium fluoberyllate leach liquor. Sodium hydroxide is added to 5500-gallon batches of the filtered leach liquor to precipitate beryllium hydroxide. The precipitated slurry is filtered, dried, and drummed as plant-grade beryllium hydroxide, approximately 97.5 percent pure, for further conversion to alloy or metal.

For subsequent conversion to beryllium oxide powder and to ceramics, a higher purity beryllium hydroxide is obtained by dissolving the plant-grade beryllium hydroxide in sulfuric acid, adding chelating agents to sequester impurities, and reprecipitating the beryllium hydroxide with ammonium hydroxide.

3.1.3 Extraction of Beryllium Hydroxide from Bertrandite Ore[2,3]

The process used for domestic production of beryllium hydroxide from bertrandite ore is proprietary. Consequently, the hypothetical conversion of bertrandite ore by a phosphate process is described below; this process has been extensively investigated by the U. S. Bureau of Mines.

Figure 3-3 is a flow diagram of the hypothetical extraction process utilizing bertrandite ore. Included in the diagram are the atmospheric emission control devices, which are discussed in Section 3.1.5.2.

Bertrandite ore is hammer-milled, dry ball-milled, and classified to minus 200 mesh for leaching with sulfuric acid. The leaching with agitation requires 24 hours at 65° Celsius. Afterward, the solids are flocculated, and the liquid is decanted and adjusted to a pH of 0.5. To suppress extraction of ferric iron, the leach liquor is treated with sodium hydrosulfate to reduce ferric to ferrous ions. It is then contacted with a kerosene solution of EHPA (di-2- ethylhexyl phosphoric acid). The extraction is a countercurrent process that can be carried out in eight stages, with about 40 minutes retention and contact time between stages. The aqueous raffinate is discarded, and the enriched EHPA solvent then encounters 5-normal-concentration caustic soda in a two-stage countercurrent stripping process. The stripped EHPA is recycled for renewed contact with leach liquor. The succeeding steps are similar to sulfate process steps (Figure 3-1) for the 100° Celsius hydrolysis of sodium beryllate and precipitation of beryllium hydroxide.

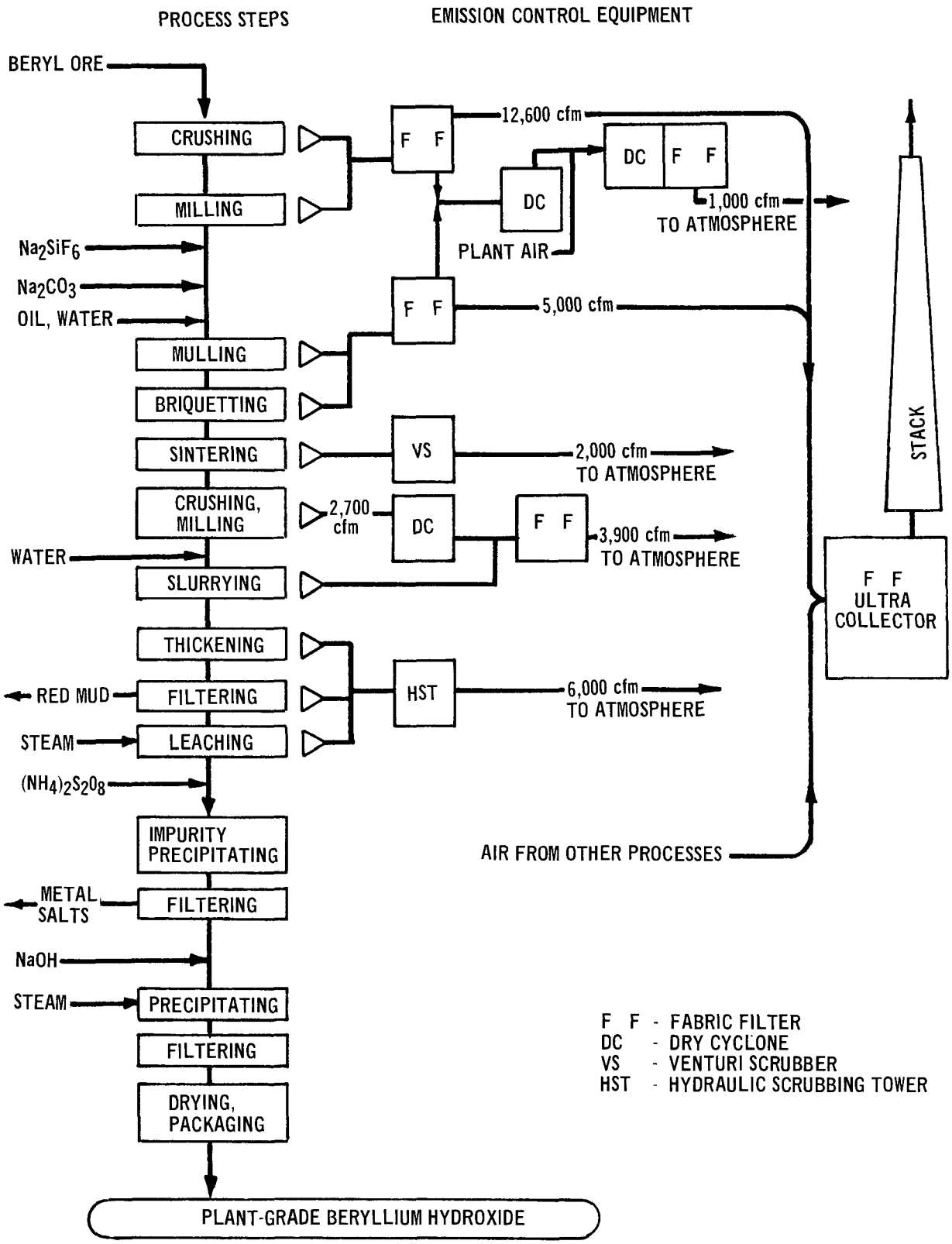

Figure 3-2. Fluoride process for conversion of beryl ore to plant-grade beryllium hydroxide.

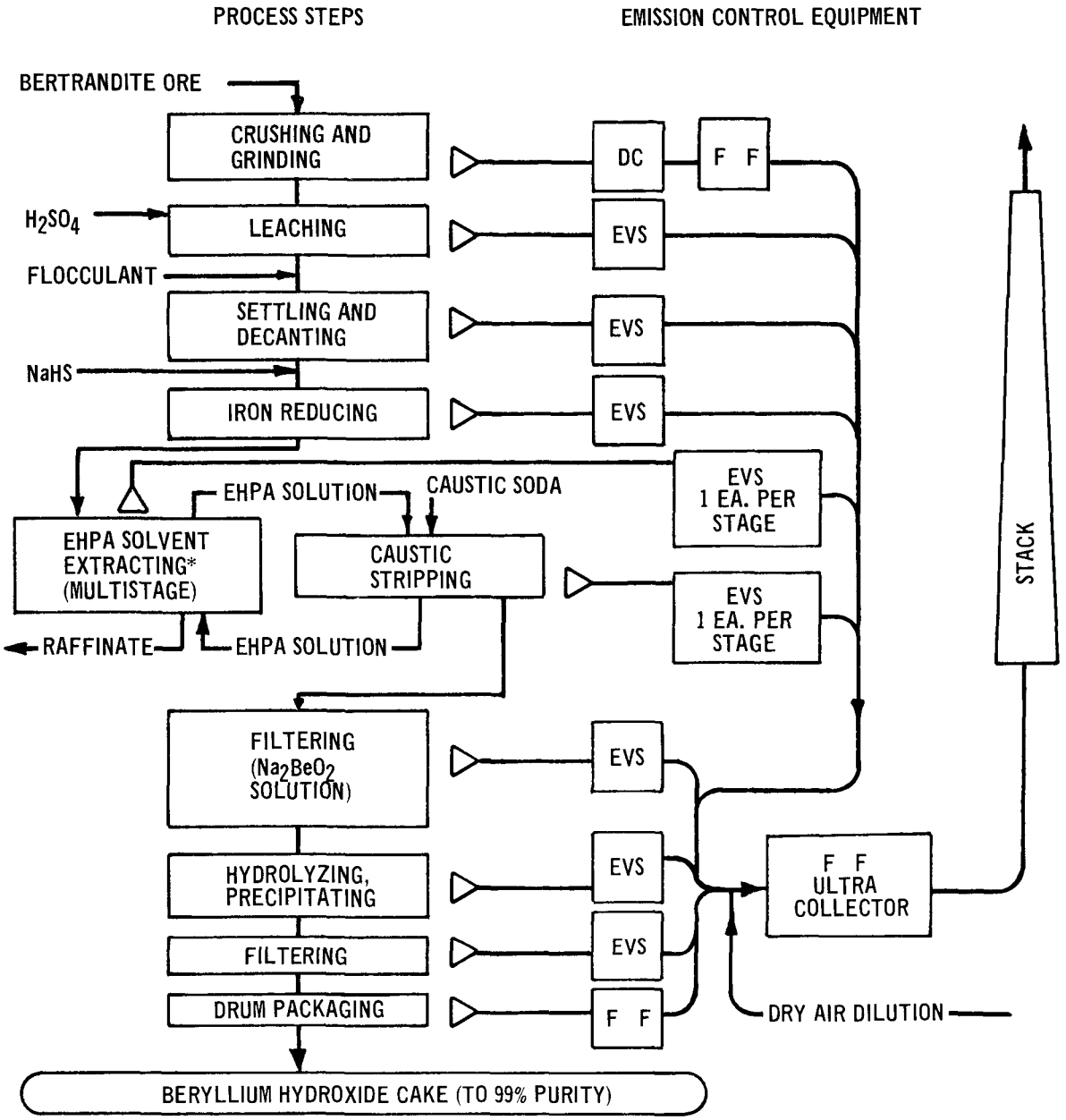

*EHPA SOLVENT IS 0.25N DI-2-ETHYLHEXYL PHOSPHORIC ACID WITH 2 WT VOL PERCENT ISODECYL ALCOHOL IN KEROSENE.

DC - DRY CYCLONE
EVS - EJECTOR VENTURI SCRUBBER
F F - FABRIC FILTER

Figure 3-3. Hypothetical plant process for the organophosphate conversion of bertrandite ore to beryllium hydroxide.

3.1.4 Conversion of Plant-Grade Beryllium Hydroxide

3.1.4.1 Metal Billets

Figure 3-4 is a flow diagram of the conversion of plant-grade beryllium hydroxide to metal billets. The atmospheric emission control equipment is discussed in Section 3.1.5.2.

Plant-grade beryllium hydroxide powder is dissolved in boiling ammonium fluoride solution to form ammonium beryllium fluoride. Calcium carbonate, lead oxide, and sulfides are added in steps to precipitate impurities, which are filtered from the solution. The purified ammonium beryllium fluoride solution is brought to high pH by the addition of ammonium hydroxide and then concentrated by evaporation.

Ammonium beryllium fluoride salt is obtained by crystallization from the liquor and by centrifuging or by drum drying. This salt is fed continuously into a high-frequency induction furnace and melted at 540° Celsius. Liquid beryllium fluoride flows out of the furnace onto a continuous casting wheel or onto a cooling turntable. The decomposition product, ammonium fluoride, is collected by scrubbing and is cycled, with added hydrofluoric acid, back to the initial step of solution of the beryllium hydroxide.

The beryllium fluoride flakes or pellets are then mixed in excess with lumps of magnesium and heated in carefully controlled stages in a high-frequency induction furnace for approximately 3½ hours. When the temperature is raised to 1300° Celsius, the molten beryllium rises to the surface as small beads in a matrix of magnesium fluoride and beryllium fluoride slag. The molten charge is cast in graphite molds as "salt pigs." These are subsequently crushed and ball-milled with the aid of steel balls to free the beryllium from the slag.

The magnesium fluoride and beryllium fluoride are removed from the beads by washing with hydrofluoric acid and water, and the steel balls are removed magnetically or by shaker screen. The beryllium beads are nitric acid-pickled and gravity-separated in a bath of ethylene dibromide and mineral oil, washed with isopropyl alcohol and water, and dried. The beads are then weighed and charged with a mixture of fine beryllium metal scrap into a tiltable vacuum-cast furnace. The beryllium is melted under vacuum and poured into billet molds. Gaseous and solid impurities are allowed to separate, and the cooled billets are pickled, washed, and dried in preparation for conversion to beryllium powder.

3.1.4.2 Finished Forms

Figure 3-5 is a flow diagram which illustrates the conversion of beryllium metal billets to finished forms. The emission control equipment illustrated is discussed in Section 3.1.5.2.

To produce beryllium finished forms, beryllium billets are first machined into chips on a lathe. The chips are reduced to minus 200 mesh powder by milling between beryllium-faced plates under a dry nitrogen atmosphere. Beryllium scrap, such as ingot crop-ends, may also be crushed in a hammer mill and added in the attrition milling process. The resulting powder is then screened and loaded into a steel or graphite die where it is pressed to about 1000 pounds per square inch and sintered at about 1050° Celsius under vacuum. Alternative powder methods are warm pressing, performed in air at 400° to 650° Celsius and 25 to 100 tons per square inch, and cold pressing, performed in air at room temperature and 10 to 50 tons per square inch. The billets thus formed may be subsequently single-stroke press-forged at 750° Celsius and 3 to 20 tons per square inch, extruded, or rolled. During these operations, the billets are usually steel-jacketed to protect against oxidation and to prevent seizing and galling of the tools. Hot-pressed powder billets can be machined approximately as well as cast iron, with the use of tungsten carbide-tipped tools.

3.1.4.3 Beryllium-Copper Alloy

Figure 3-6 is a process flow diagram for

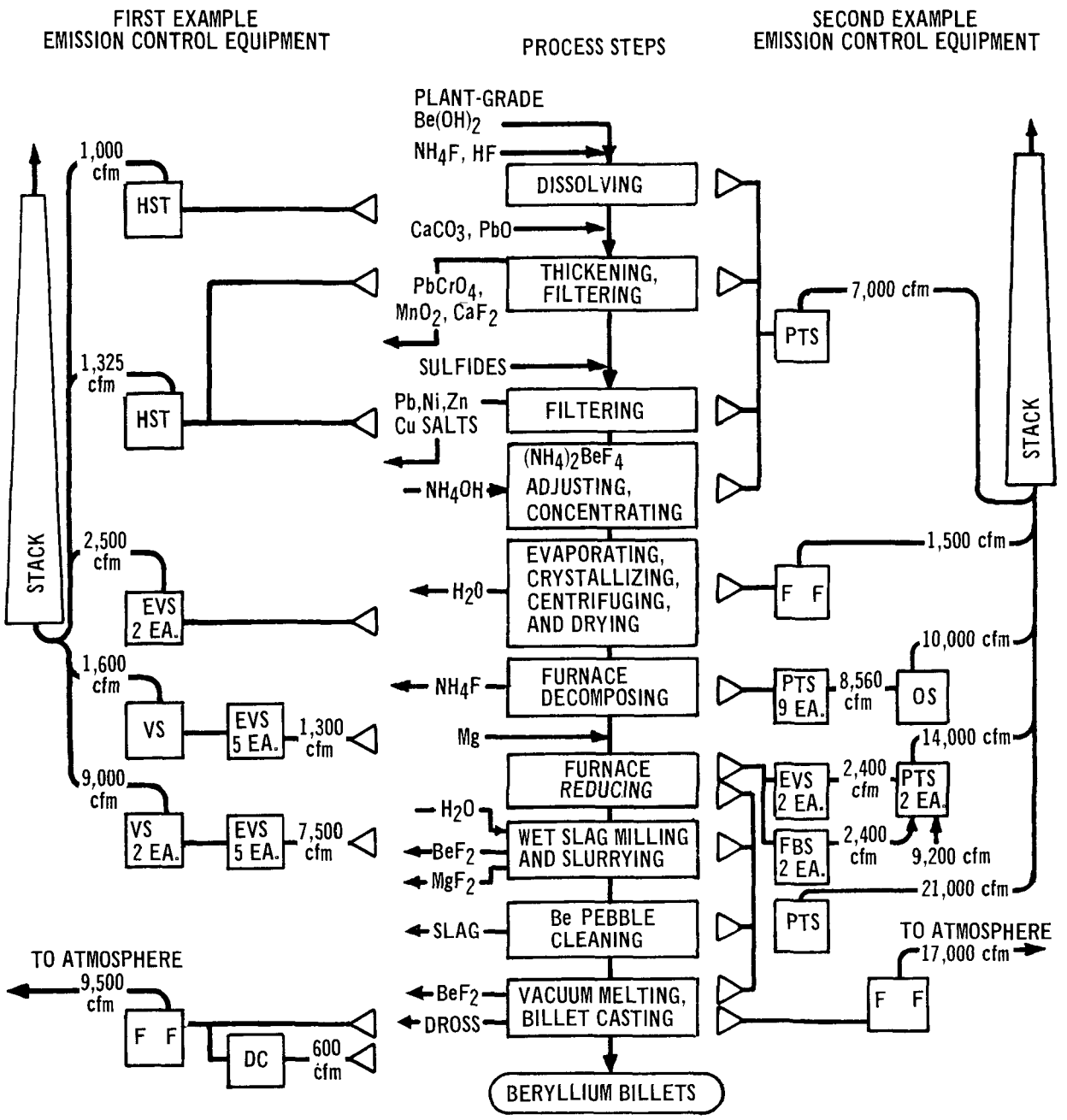

PTS	- PACKED TOWER SCRUBBER	DC	- DRY CYCLONE
HST	- HYDRAULIC SCRUBBING TOWER	VS	- VENTURI SCRUBBER
OS	- ORIFICE SCRUBBER	EVS	- EJECTOR VENTURI
FBS	- FLOATING BED SCRUBBER	F F	- FABRIC FILTER

Figure 3-4. Conversion of beryllium hydroxide to beryllium metal billets.

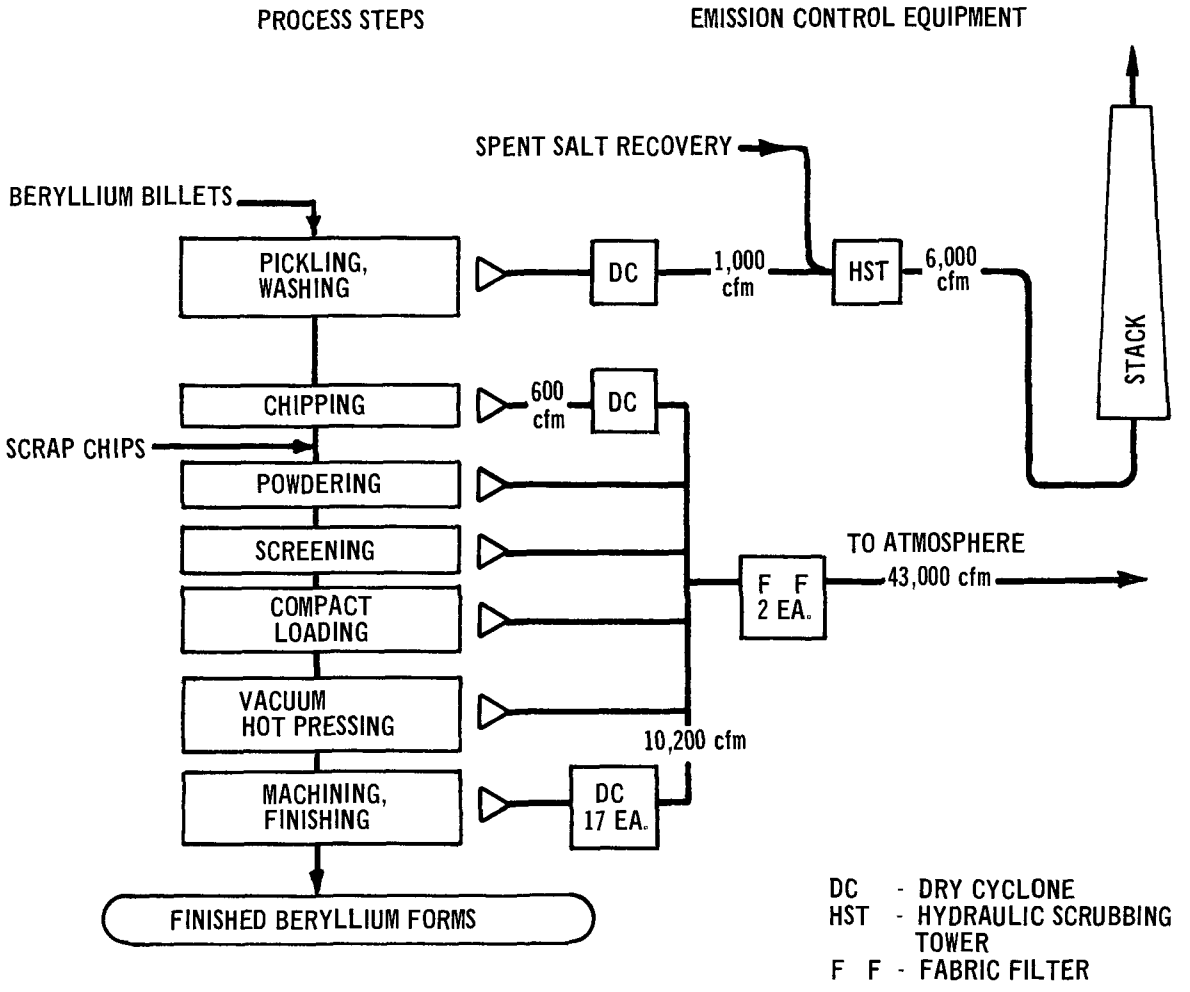

Figure 3-5. Conversion of beryllium billets to beryllium metal forms.

the production of beryllium-copper alloy. The illustrated emission control equipment is discussed in Section 3.1.5.2.

The process for beryllium-copper alloy production is based on the ability of beryllium oxide to undergo reduction by carbon, under atmospheric pressure in the presence of a metal that forms an alloy with beryllium at the reduction temperature.

Plant-grade beryllium hydroxide powder is calcined at 800° Celsius to beryllium oxide. The oxide is blended with carbon dust, and together with copper chips and the dross from previous melts, it is fed into a three-phase arc furnace at 1800° to 2000° Celsius.

At a furnace temperature of 2200° to 2400° Celsius, the beryllium oxide is successively reduced by the carbon to beryllium and beryllium carbide, both of which dissolve in the molten copper to form a beryllium-copper alloy. The less soluble beryllium carbide and carbon monoxide leave the melt when the alloy is cooled in a foundry crucible to the casting temperature, approximately 1000° Celsius. The solid impurities are skimmed from the melt, and, together with furnace dust, are recycled into a dross storage bin for addition to subsequent furnace charges of beryllium oxide, copper, and carbon.

Master alloy containing 4 to 4.25 percent beryllium is cast into ingots which are sold in this form or subsequently remelted with additional copper to produce 0.25 to 2.75 percent beryllium-containing commercial

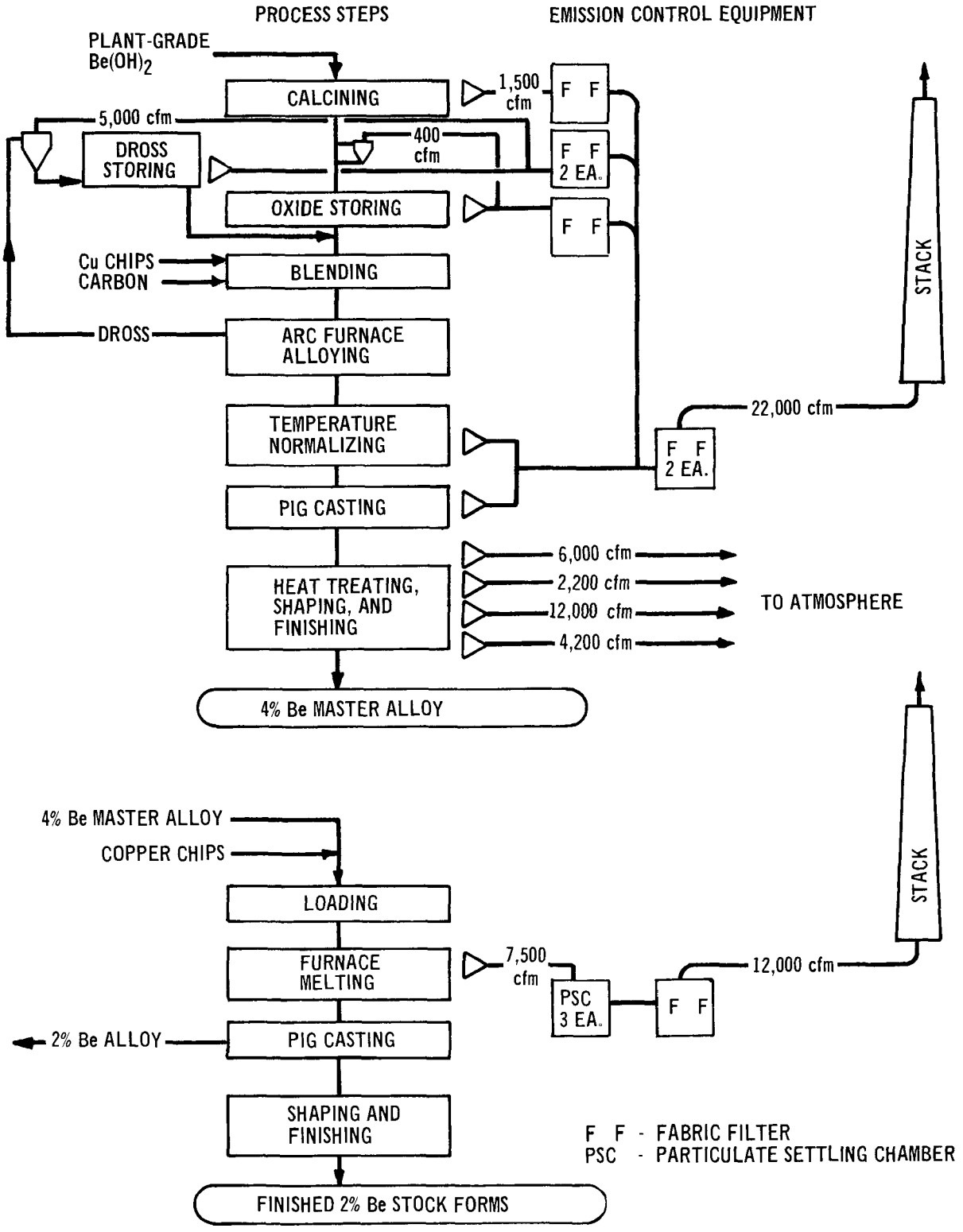

Figure 3-6. Conversion of plant-grade beryllium hydroxide to alloys.

alloys. At extraction plants, alloys are rolled or drawn to rod, bar, sheet, strip, or stock forms, or are trimmed for sale as billets, which may weigh up to 1500 pounds.

3.1.4.4 Beryllium Oxide

The beryllium extraction plant production of beryllium oxide involves many variations in materials, purification processes, milling processes, and temperatures to meet specifications of purity, particle size, particle specific surface area, and molecular structure; the last two characteristics are determined by the temperature of firing. Some commercial beryllia powders are derived from decomposition of beryllium sulfate, rather than beryllium hydroxide. Producers describe products as "hydroxide-derived," "sulfate-derived," "low-fired," or "high-fired," or blends of these, in addition to furnishing information on particle characteristics and purity. Beryllium oxide and ceramic production are described below with reference to hydroxide-derived, low-fired material.

Figure 3-7 is a process flow diagram for the production of beryllium oxide. The illustrated emission control devices are discussed in Section 3.1.5.2.

High-purity beryllium hydroxide is blended with recycled beryllium oxide powder, and iron is removed magnetically in a ferro filter. The blend is then heated in a beehive- or rotary-type furnace to about 750° Celsius to decompose the beryllium hydroxide and obtain a powdered, low-fired beryllia product. The powder can be further refined to remove impurities. It is either screened and milled to specified mesh and grade for packaging and sale, or it is further processed within the plant to kiln-fired stock forms or wares.

For ceramic production, binders and lubricants are added, and the oxide powder is slurried and milled to fine mesh sizes, usually minus 200 mesh. The material is either spray-dried and subjected to dry or isostatic pressing, or it is pan-dried and mull-mixed with water to a clay-like paste for extruded-shape production. Both forms are kiln-fired at about 1450° Celsius. The firing produces a sintered, hard ceramic which can be wet-ground, bored, machined into wafers, or surface-finished by vibro-milling.

3.1.5 Beryllium Extraction Plant Emissions and Controls

3.1.5.1 Emissions

Definitive quantitative data on beryllium emissions from extraction plants are not available. However, these facilities have been designed to limit ambient concentrations of beryllium to 0.01 microgram per cubic meter and have demonstrated the capability for operation within this limit.

Beryllium extraction plant emissions are more varied than those of any other beryllium emissions source. The type and amount of emissions vary with each specific operation of the extraction process. Table 3-1 lists emission-producing operations, emissions, and feasible classes of control equipment for a typical extraction plant. The control techniques and corresponding operating characteristics are discussed in Section 3.1.5.2.

3.1.5.2 Control Techniques

The following are appropriate practices for the control of emissions from beryllium extraction plants:

1. Local pickup of contaminated gases from fully or partially enclosed sources.
2. Tandem use of primary and secondary air-cleaning devices, the former mainly to remove reactive gases or larger particulates, and the latter to provide high-efficiency cleaning of smaller particulates.
3. The use of high-energy wet collectors or scrubber devices to obtain high particle collection efficiency for the removal of wet, hygroscopic, or corrosive contaminants.
4. Application of fabric filters for high-efficiency collection of dry particulates.

In chemical processes which involve high-

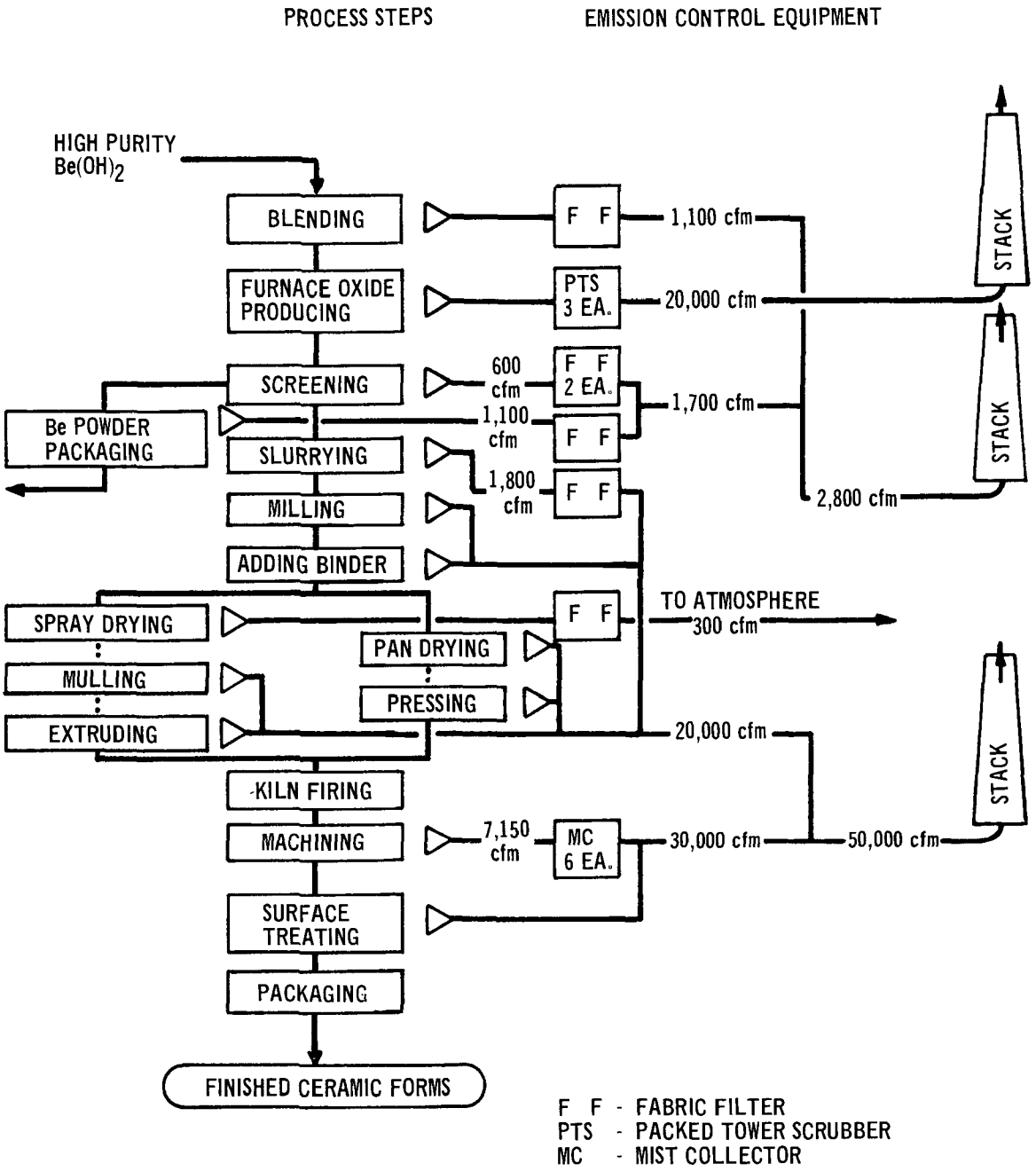

Figure 3-7. Conversion of beryllium hydroxide to beryllium oxide powder and ceramics.

Table 3-1. CHARACTERIZATION OF BERYLLIUM EXTRACTION PLANT EMISSIONS[a]

Extraction plant operation	Emissions	Control device
Ore crushing	Beryl ore dust	Dry cyclone, baghouse
Ore milling	Beryl ore dust	Dry cyclone, baghouse
Mulling	Beryl ore dust, Na_2SiF_6, Na_2CO_3	Baghouse
Briquetting	Briquette dust	Baghouse
Sintering	Beryl dust, sinter dust	Venturi scrubber
Briquette crushing and milling	Briquette dust	Dry cyclone, baghouse
Slurrying	Ground sinter	Baghouse
Thickening	Sinter slurry	Scrubber
Filtering	Sodium fluoberyllate	Scrubber
Leaching	Ammonium persulfate fume	Scrubber
High purity beryllium hydroxide production	$Be(OH)_2$ slurry, H_2SO_4 fume	Scrubber
Beryllium metal production	$(NH_4)_2BeF_4$ slurry, $PbCrO_4$ CaF_2, HF, $Be(OH)_2$, BeF_2, NH_4F fume, Mg, Be, MgF_2, BeO acid fume	Packed tower scrubber, scrubbing tower, floating bed scrubber, dry cyclone, venturi scrubber, baghouses
Beryllium oxide production	BeO furnace fume and dust, BeO dust	Packed tower scrubber, baghouse mist collector
Beryllium-copper alloy production	Alloy furnace dust, Be, Cu BeO	Settling chamber, cyclone, baghouse

[a]The variety of different possible chemical compositions in extraction plant emissions is not meant to be limited to those contained in this table. The purpose of this table is to give an indication of the most probable emissions.

temperature oven or furnace fumes, wet collectors are effective; in milling and fabrication processes, fabric filters can be used.

With minor exceptions, the types of gas cleaning equipment applied for control of emissions from beryllium production plants are of three main classes:

1. Mechanical dry collectors (centrifugal separators).
2. Wet collectors (scrubbers).

3. Fabric filters (baghouses).
Prefilters and high efficiency particulate air filters (HEPA filters) are occasionally employed. These types of filters are discussed in more detail in Section 3.2.2.3 and in the Appendix.

Table 3-2 gives pressure losses, efficiencies, and power requirements for each of the above classes of gas-cleaning equipment. These parameters are seen to vary widely within each class of equipment.

An appraisal of the present gas-cleaning capabilities of beryllium production plants is presented in Table 3-3.[4]

3.1.5.2.1 Mechanical dry collectors. Mechanical dry collectors are widely employed in beryllium metal, alloy, and ceramic production processes that generate dry particulates. Most frequently, these devices are used to capture the larger particulates in the exhausts of machining operations, mill processes, and fabrication operations. Often these collectors perform initial cleaning of dust-laden air prior to the application of additional, more efficient gas-cleaning equipment. Relatively simple construction, low installation and maintenance costs, dry and continuous disposal of dust, and low sensitivity to temperature are advantages of mechanical collectors.

Power requirements (Table 3-2) of dry mechanical collectors are usually low by comparison with those of wet collectors. The efficiency of mechanical collectors varies directly with inlet gas velocity and particle density, and inversely with gas viscosity. The collection efficiencies of even the most efficient types of mechanical collectors decrease rapidly for particles smaller than 5 microns in diameter.[5]

Beryllium extraction plants utilize mechanical collectors in a wide range of sizes and configurations. Gas entry may be either involute (axial) or tangential. Axial entry, small diameter, high inlet velocity, and pressure decreases as large as 5 inches of water, where employed together, characterize the high-efficiency types of mechanical collectors. Other types that have a mechanically driven rotor element are not widely employed in beryllium production plants, probably because of a tendency for solids to build up on the rotor, resulting in plugging or rotor unbalance.

Dry cyclones can be used individually or in multiple banks, as shown schematically in Figure 3-8. Packaged units with clusters of small-diameter tubes are preferred for their higher efficiency, but power consumption is greater. Collected particulates are usually removed continuously to a collection hopper.

Table 3-2. PARTICULATE COLLECTION EQUIPMENT

Equipment class	Gas pressure loss, in. water	Efficiency,[a] percent	Power requirement, hp/cfm
Mechanical dry collector	1 to 5	50 to 90	0.0003 to 0.002
Wet collector	1.5 to 80[b]	60 to 99+	0.0005 to 0.03[b]
Fabric filter	0.5 to 12[c]	95 to 99.9	0.0002 to 0.004

[a]For an aerosol having approximately 10 to 15 percent of particles less than 10 microns in diameter, by weight count.

[b]Power consumption can be mainly in pressure loss (for example, venturi scrubbers) or mainly in water pumping (for example, hydraulic scrubbing towers).

[c]Higher efficiencies can be obtained at lower pressure drops, where the goal is to maximize diffusion capture of fine particles by decreasing the filter velocity.

Table 3-3 CONTROL EQUIPMENT AND COLLECTION EFFICIENCIES FOR BERYLLIUM PRODUCTION PLANTS[4]

Operation or process	Type of gas cleaner	Expected efficiency, percent by weight
Ore handling, crushing, ball milling, etc	Reverse jet or shaking fabric filter	99
Sinter furnace	Wet cell or spray scrubber	80
Leaching and hydroxide filter	Wet cell or spray scrubber	80
Sodium fluoride handling (no Be)	Wet cell or spray scrubber	80
Beryllium hydroxide, dry	Reverse jet or shaking fabric filter	99
Beryllium hydroxide dryer and calciner	Wet spray unit for cooling, then to above unit	99
Beryllium fluoride mixer	Wet cell or spray tower	80
Beryllium fluoride furnace	Venturi scrubber, orifice scrubber, or packed tower and wet Cottrell unit	95
Reduction furnace	Venturi scrubber, orifice scrubber, or packed tower and wet Cottrell unit	95
Machining, powder metals handling	Small cyclone units plus fabric filter with asbestos filter aid	99 9
Welding, heat treating	Fabric filter with filter aid and dilution air to bring temperature to 80 C	99 9
Miscellaneous laboratory hoods	Roughing filter plus HEPA filters	99 95

3.1.5.2.2 Wet collectors. Wet collectors are used to treat exhausts from chemical processes, such as the conversion of ore to beryllium hydroxide and beryllium hydroxide to billets, which emit hot, corrosive, or toxic vapors. For example, sulfur trioxide, silicon fluoride, hydrogen fluoride, ammonium fluoride, and ammonia occur in process exhausts that contain beryllium compounds. Wet collection of some beryllium compounds, for example, extremely hygroscopic beryllium fluoride fume from furnaces, is advantageous. In general, wet collectors are applied to remove hot, corrosive, wet, sticky, hygroscopic, agglomerating, or inflammable materials from gas streams.

Collection efficiencies (Table 3-2) of wet collectors are closely related to the energy expended in providing contact between particulates and scrubbing liquid. The design details of individual types of scrubbers in the same energy range are, however, important in directing input power to achieve maximum contact and collection efficiency. Large increases in scrubbing power are required to collect submicron particles; pressure decreases of 50 inches of water or more are necessary for better than 99 percent efficiency when a large portion of the entrained particulate is of submicron size.

Wet collectors are classified as low-energy, medium-energy, and high-energy types. The most frequently used wet collectors in beryllium production plants are classified as follows:

1. Low-energy type: orifice scrubbers.
2. Medium-energy type: packed-tower scrubbers, hydraulic scrubbing towers, and floating-bed scrubbers.
3. High-energy type: ejector venturi scrubbers and venturi scrubbers in series with cyclones or packed towers.

Schematic diagrams of the construction features of these scrubbers are shown in Figure 3-9.

Packed-tower scrubbers and venturi scrubbers excel in removal of vapors from gas streams, the packed tower by provision of large surface area of liquid-gas contact and the venturi scrubber by provision of contacting large numbers of liquid droplets with the gas stream. The ability of these collectors to provide simultaneous gas-to-liquid extraction and efficient particle removal is advantageous in controlling emissions from beryllium production. Power consumption and efficiencies of particle and vapor removal of packed-tower scrubbers depend largely on bed depth.

Problems encountered in the use of wet collectors are listed below:

1. Water and fine-particle carry-over.

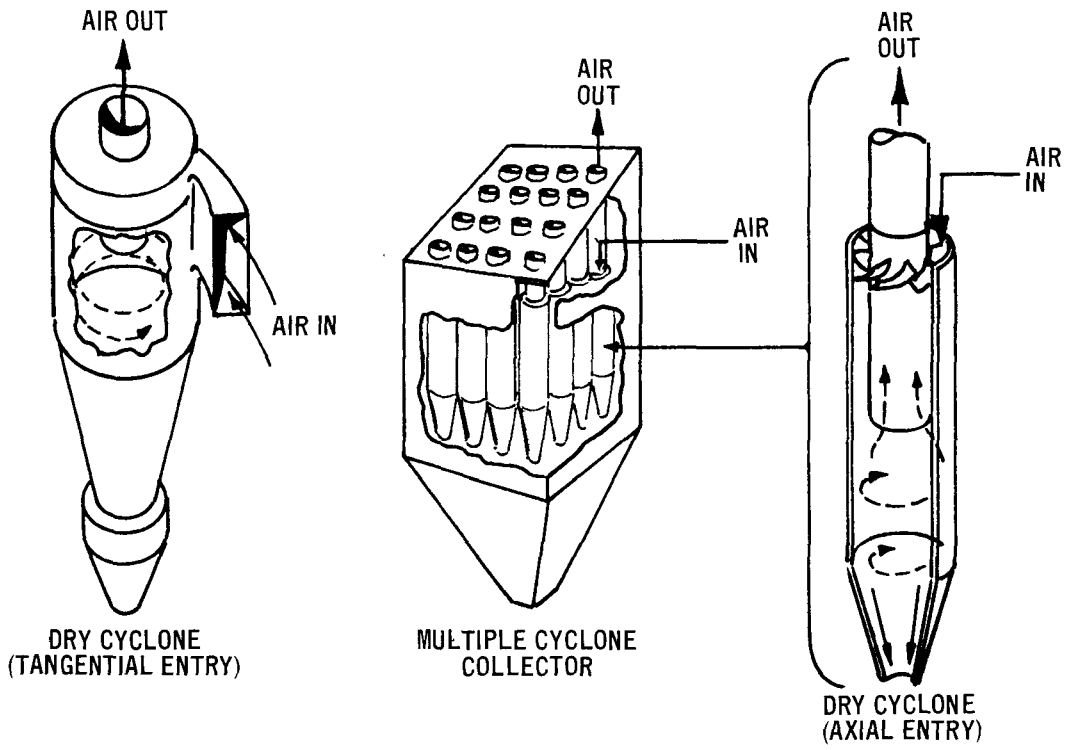

Figure 3-8. Types of dry mechanical collectors used by beryllium extraction facilities.

2. Buildup of corrosive compounds in the liquid and of residue in the apparatus; clogging of nozzles, particularly at large recirculation ratios.
3. High installation cost.
4. High operational cost.
5. Leakage of contaminated liquids.

3.1.5.2.3 Fabric filters. Fabric filters are used to control emissions from the processes of converting beryllium metal billets to metal forms, beryllium hydroxide to alloys, and beryllium hydroxide to beryllia powder and ceramics. These operations require highly effective removal of toxic dusts and fumes.

A typical fabric filter application is a compartmented, shaker-type collector utilized as a secondary air cleaner for dry gases. This collector contains several thousand Orlon* bags, each coated with asbestos "floats" as a filter aid. It operates at a 6:1 filter ratio and handles a flow rate of approximately 70,000 cubic feet per minute. (The filter ratio is defined as the volumetric flow rate in cubic feet per minute divided by the fabric surface area in square feet.)

The following are characteristics of particulate collection by the use of fabric filters:

1. High efficiencies (better than 99.5 percent) can be achieved.
2. Collectors can be frequently regenerated, or cleaned to a condition of lower pressure decrease.
3. Periodic recovery of valuable materials is practical.

Power requirements and a range of attainable efficiencies for fabric filters are specified in Table 3-2. The buildup of a filter cake and the use of filter aids are important in the attainment of optimum efficiency of operation. Beryllium production plants usually operate pulse-jet and reverse-jet filters at pressure decreases of 6 to 9 inches of water.

* Mention of commercial products or company name does not constitute endorsement by the Environmental Protection Agency.

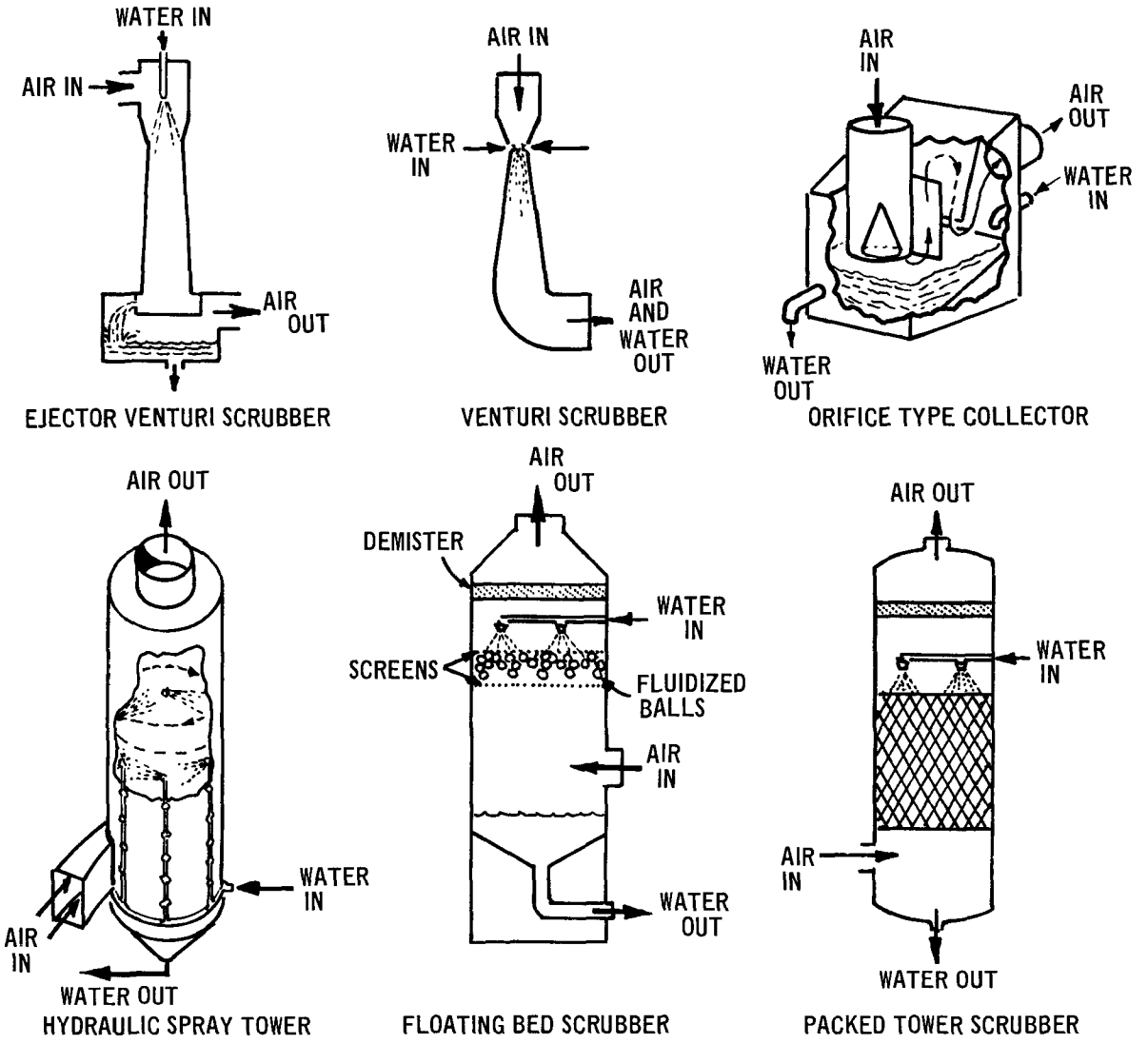

Figure 3-9. Types of wet collectors used in beryllium production plants.

Fabric filters are characterized by the following variables:

1. Materials: woven or felted structure; type of weave or felting; material composition; use of fabric conditioner or filter precoat.
2. Fabric geometry: tube or envelope; dimensions.
3. Construction: open or closed housing; internal or external flow of burdened gases; pressure or suction; compartmentation for cleaning while in service.
4. Method of cleaning: shaking; bag collapse; bag inversion; pulse jet; traveling reverse jet; other variations, including air horns.

The various types of fabric filters, a wide variety of which are used by beryllium production plants, are shown in Figure 3-10.

Beryllium production plants employ closed suction (i.e., closed housing and suction operation) filters to protect the fan from contamination. The larger, shaker-type filters are compartmented to allow cleaning during operation. Tube, rather than envelope, bags are preferred for ease of replacement. For particulates with large portions of submicron particles, bags made of Dacron, Orlon, or Nylon are used because the conventional

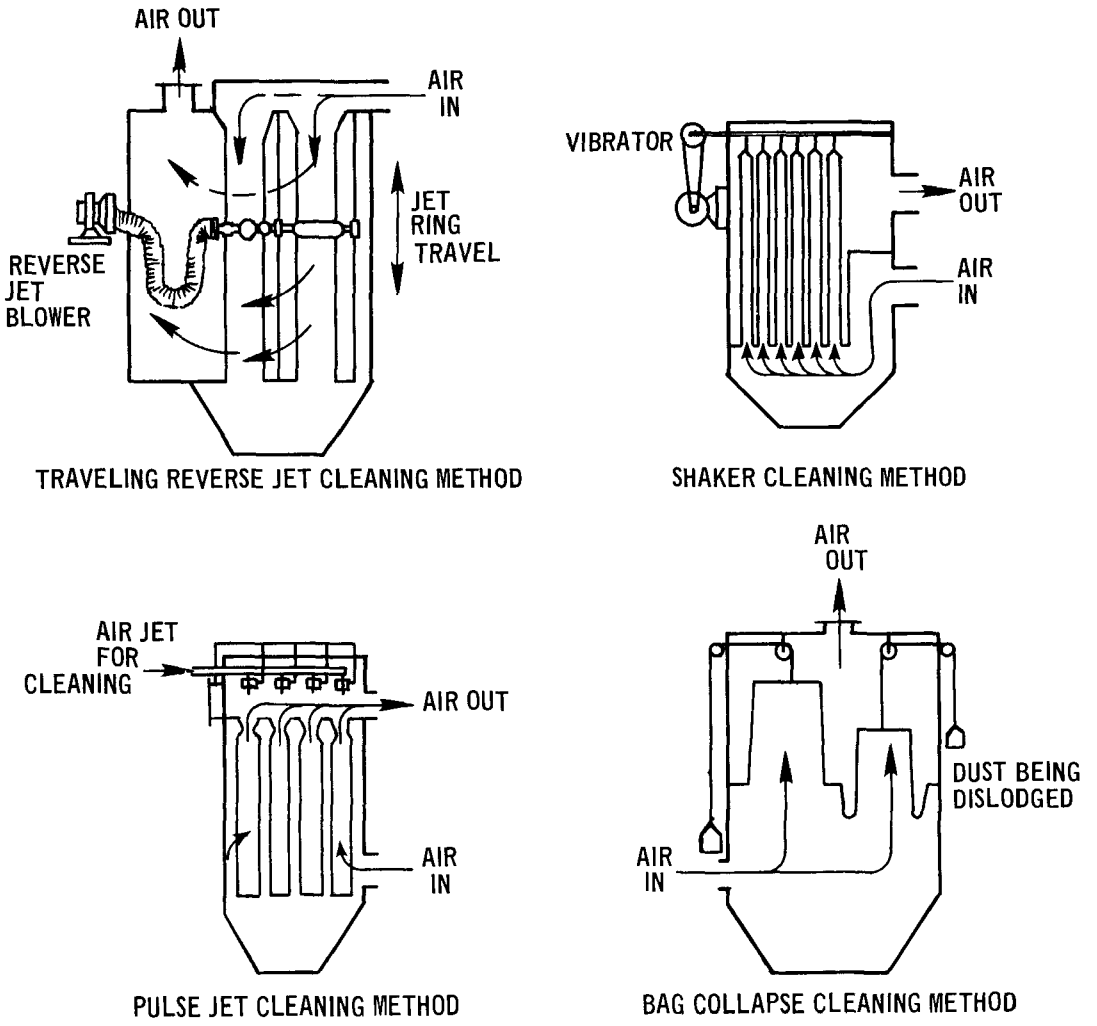

Figure 3-10. Types of fabric filters used in beryllium production plants.

cotton sateen bags appear to be more easily "blinded" by fine dusts. For high-temperature exhausts, the relatively recent use of Nomex fabric bags, at temperatures of up to 220° Celsius, extends the applicability of fabric filters to situations which previously required scrubbers with higher operating costs and lower efficiencies.

Fabric filters usually have woven tube bags that are dependent on filter cake buildup for highly efficient collection of particulates. An effective dust layer normally accumulates on the fabric within the initial few minutes of operation. In beryllium plants, woven bag filters are operated at filter ratios of 1:1 to 3:1, and pressure decreases range from 2 to 8 inches of water. Felted fabrics are employed in reverse-jet and pulse-jet filters, and pressure decreases average about 6 inches of water between cleaning cycles. These latter types of filters are operated at filter ratios ranging from 5:1 to 10:1 and can accommodate high dust loadings. However, the tendency of felted fabrics to become irreversibly clogged by fine fumes has limited the application of this type of fabric.

Two of the problems encountered in the use of fabric filters are:

1. Relatively large space requirements.
2. Limitations imposed by temperature, wetness, and abrasive qualities of particulate-laden gas streams.

3.2 BERYLLIUM METAL, BERYLLIUM OXIDE, AND BERYLLIUM-COPPER ALLOY MACHINE SHOPS

Beryllium and beryllium-containing products are processed by numerous domestic machine shops and fabrication plants into end items for industry, defense, and space flight. Most of this material is beryllium-copper alloy. About 60 percent, or 225 tons, of beryllium production in 1970 is estimated to have gone into alloys that nominally have 2 percent beryllium content;[1,6] beryllium metal and beryllium oxide accounted for approximately 35 and 5 percent, respectively, of production.

3.2.1 Machining and Emissions

Machine shops obtain numerous forms of beryllium, such as pressed, extruded, rolled, or forged material, from primary producers. Examples of the subsequent machining operations are turning, milling, grinding, drilling, lapping, honing, and electrical discharge machining.

The Air Force Machinability Data Center recommends that beryllium machining be performed dry wherever possible,[7] and the majority of machine shops follow this practice. One benefit of dry machining is the resultant higher reclamation value of clean beryllium chips generated by machining, by comparison with mixtures of chips and cutting fluids. A cutting fluid is necessary, however, for deep-hole drilling, reaming, and tapping. Liquids do not seem to be necessary for grinding, honing, and polishing, but they are widely used in these operations and in others for which it is desirable to decrease tool replacement costs. Various machining operations, such as milling, grinding, drilling, lapping, and honing, are also performed on beryllium oxide forms and beryllium-copper alloy stock.

The nature and quantity of potential atmospheric emissions from beryllium, beryllium oxide, and beryllium-copper alloy machining facilities are widely variable. The type of machining operations (rough cutting, finish cutting, dry, wet) determines whether the emissions are beryllium-containing chips, dust, mist, or fume. When finish cutting or grinding is performed, emissions are primarily in the form of dust, mist, or fume, whereas rough cutting produces chips and a smaller quantity of dust, mist, or fume. The use of cutting fluids is the primary source of mists and fumes in most operations. The extent to which the machining operations are ventilated to the atmosphere affects the quantity of uncontrolled emissions. In contrast with beryllium and beryllium oxide machine shops, beryllium-copper alloy machine shops are essentially uncontrolled except where low-efficiency collectors are used to capture larger chips for recycling.

Accidental combustion of beryllium particles generated by machining operations has occurred, and such fires are potential beryllium emission sources at machining facilities.[8] Finely divided beryllium dust that adheres to the surfaces of ventilation ducts and gas cleaning equipment can be ignited by sparks. The use of oils, especially kerosene, as cutting fluids for wet machining can increase the possibility of beryllium fires. Fires can occur, for example, at locations where chips, dust, and kerosene are carried into a dry-type particulate collector which directly serves a machining operation.

Secondary beryllium emissions can result from the removal of beryllium-containing dust and machining chips from gas cleaning devices, from the packaging of these for disposal, and from changing contaminated disposable-type filters.

3.2.2 Emission Control Techniques

Individual processes for machining beryllium-containing materials require local ventilation to control beryllium emissions to the surrounding work space. The geometrical configurations and air flow capacities of dust capture hoods should be tailored to efficiently collect wastes from each type of machine. Practical dust and chip capture velocities are usually 500 to 3000 feet per minute,

and those for large chips are as high as 14,000 feet per minute. Open-face hood velocities are seldom smaller than 150 and may exceed 300 feet per minute. Hose, pipe, and duct transport velocities are usually 3000 to 4000 feet per minute, but may range from 2500 to 6000 feet per minute.[9,10]

Various beryllium emission control air streams from individual processes for machining beryllium-containing materials can be manifolded together prior to eventually exhausting these from a work space. Beryllium emissions to the atmosphere can subsequently be controlled by successively passing the gas stream through more than one gas-cleaning device (Figures 3-11 through 3-13). Table 3-4 indicates the current frequency of use of various gas-cleaning devices in beryllium and beryllium oxide machine shops and specifies the location of each device in a multiple-collector installation.

3.2.2.1 Mechanical Collectors

Exhaust streams from wet machining operations can undergo initial cleaning in oil-mist collectors or in centrifugal fan wet scrubbers. The latter are suitable for collecting chips and dust. In normal situations where the composite beryllium-containing ventilation stream from wet machining operations is much smaller than that from dry machining, the initial cleaning and combining of the two streams prior to final-stage gas cleaning reduce the possibility of condensation and resultant clogging of the final filters.

3.2.2.2 Fabric Filters

Fabric filter installations can be used as either intermediate or final collectors. As an intermediate collector, a fabric filter precedes a bank of HEPA filters to prevent the overloading of the HEPA filters and to make possible the reclamation of significant quantities of valuable beryllium-containing particu-

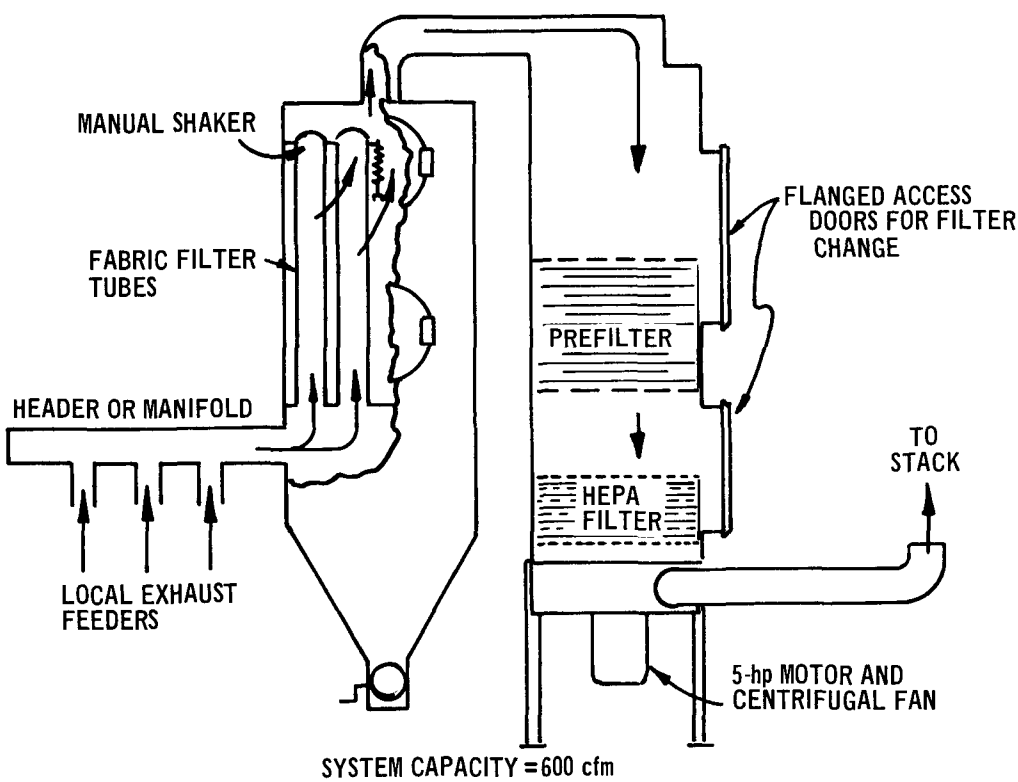

Figure 3-11. Unitized fabric tube filter, prefilter, and HEPA filter for beryllium or beryllium oxide machining facility.

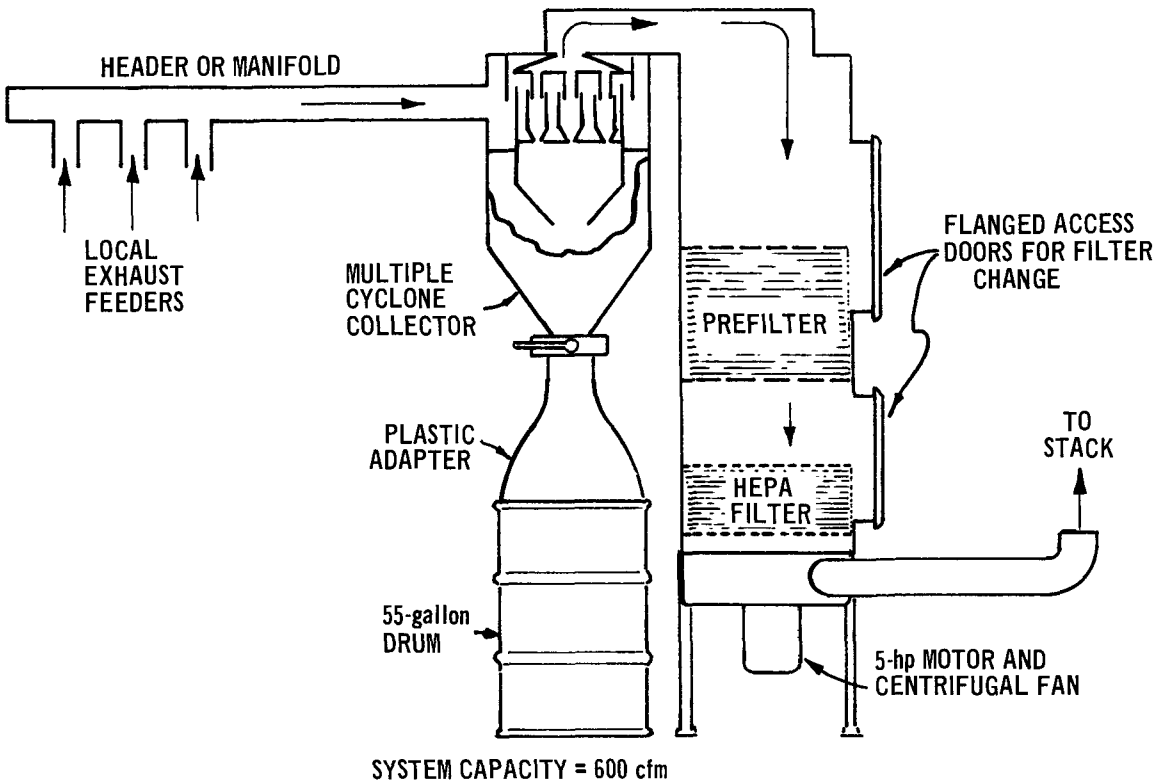

Figure 3-12. Unitized multiple dry cyclone collector, prefilter, and HEPA filter for beryllium or beryllium oxide machining facility.

lates. For example, smaller machining chips and dust from beryllium machine shops can be discharged directly from the filter cake of a fabric filter into a shipping barrel for sale and eventual reclamation. When operated as final collectors, fabric filters are usually preceded by either a screening- or a cyclone-type collecting device. Ventilation streams from both wet and dry machining operations can be cleaned by fabric filters.

3.2.2.3 HEPA Filters

HEPA filters can reduce beryllium emissions from machine shops to concentrations smaller than those attainable with fabric filters. As previously indicated in Table 3-4, HEPA filters are used in some instances as final filters by beryllium and beryllium oxide machine shops.

In many cases, a precleaning device should precede a HEPA filter installation to extend the lifetime of the HEPA filter (Figures 3-11 through 3-13). HEPA filters can remain in service for a year or more, depending upon inlet particulate loading.

3.2.3 Beryllium Fires

The use of water or carbon dioxide to extinguish the combustion of beryllium-containing materials can be ineffective or even detrimental.[8,11] A recommended practice is smothering of the fire with a suitable dry powder.[11] Local fire departments and fire-fighting units controlled by manufacturing facilities should be informed of the presence of beryllium-containing materials that are subject to combustion.

Equipment surfaces on which fine beryllium-containing dust can be deposited, for example ducts of local ventilation systems, should be periodically cleaned and should be protected from the incidence of sparks which can initiate combustion. High-velocity air flows, which may induce spontaneous com-

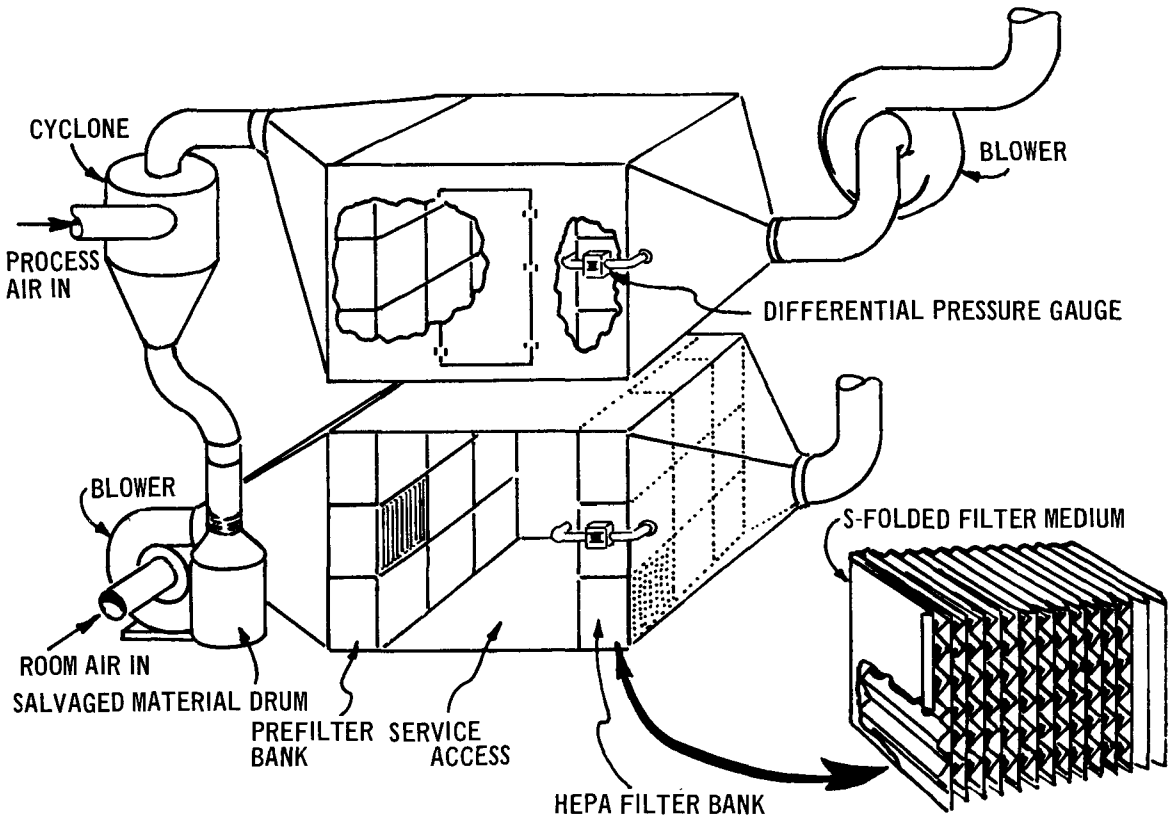

Figure 3-13. Air cleaning system for beryllium or beryllium oxide machine shop process and ventilation air streams.

bustion of mixtures of volatile cutting fluids and fine beryllium dust in ducts and in gas-cleaning devices, should be avoided.

3.3 BERYLLIUM-COPPER FOUNDRIES

Foundries melt beryllium-copper alloy ingots, which usually contain 1.90 to 2.05 percent beryllium by weight, and recast these into end products. A small number of foundries use 4 percent beryllium-copper master alloy. The quantities of beryllium-copper alloy processed at various foundries vary widely from occasional use for special jobs to casting on a continued basis; the largest foundries individually cast more than 30 tons of alloy per year.

3.3.1 Foundry Operations and Emissions

The casting of beryllium-copper alloys into end products begins by placing ingots into a crucible and subsequently melting these by heating the material in an electrical or induction furnace or by a natural-gas-fired lance which is directed against the material in the crucible. No fluxes, slag covers, or deoxidizers are required since the alloy is typically heated to a pouring temperature of 1100° to 1130° Celsius. As the melting proceeds, an empty transfer crucible may be preheated to receive the molten alloy prior to casting of the metal into molds. The degree of shielding of melting and preheating operations from the adjacent work space can vary between the limits of complete exposure and rather complete enclosure of the processes.

Upon completion of the melting cycle, the contents of the primary crucible are typically poured into a transfer crucible, and waste metal oxides and impurities are manually ladled, or drossed, from the top of the transfer crucible. Subsequently, the transfer crucible is covered and transported to a casting area. The molten alloy is usually poured directly from the transfer crucible into molds of various types, for example,

Table 3-4. GAS CLEANING EQUIPMENT FOR BERYLLIUM AND BERYLLIUM OXIDE MACHINE SHOPS

Equipment	Frequency of use	Location
Oil-mist collector	Fairly common	Initial
Wet rotary cyclones	Fairly common	Initial
Dry rotary cyclones	Fairly common	Initial
Multiple (dry) cyclones	Frequent	Initial
Fabric filters	Fairly common	Intermediate or final
Prefilter and HEPA filter	Fairly common	Final

centrifugal, permanent, precision investment, pressure casting, or vacuum assist molds. Foundry practices also include the direct charging of molds from a primary crucible and the indirect filling by operations other than pouring. The solidified casting products, after being removed from the molds, are often given such finishing operations as rough cutting, grinding, cleaning, and polishing. Annealing, precipitation hardening, and welding of beryllium-copper alloys are also performed at foundry facilities.

Beryllium-containing fumes can be generated by the following foundry operations:

1. Melting ingots in primary crucibles, particularly when a gas-fired lance is used.
2. Preheating transfer crucibles that have previously contained beryllium-copper alloy.
3. Transferring molten beryllium-copper alloy from a primary to a transfer crucible.
4. Drossing and dross handling.
5. Charging molds with beryllium-copper alloy.

Finishing operations, such as cutting, grinding, and buffing, which are performed on cast products, are potential sources of beryllium-containing dust emissions.

In an overall sense, atmospheric emissions of beryllium from beryllium-copper foundries are not well controlled at present.[12] Emission-producing operations are often locally ventilated by suction hoods, but the exhausts are discharged to the atmosphere without treatment to remove contaminants. Heated gases generated during foundry operations are frequently permitted to mix with work space ventilation air to form natural draft currents that are emitted from roof ventilators of an enclosing structure.

3.3.2 Emission Control Techniques

Beryllium-containing emissions from the various emission sources listed in Section 3.3.1 can be entrained at the source into an air stream by the use of local particulate capture hoods. Ventilated enclosures are often effective, for example, in containing potential emissions from melting furnaces. At those beryllium-copper foundries that control atmospheric emissions, it is common practice to manifold together numerous emission streams to form a single contaminated gas stream, which is then treated in a large-scale final collector prior to discharge into the atmosphere.

Emissions from beryllium-copper foundries can be controlled by the use of fabric filters as final collectors; settling chambers or conventional cyclones can be employed as precollectors to remove larger particulates and thereby reduce the required cleaning frequency of final fabric collectors. Fabric filter installations containing Dacron bags with air flow permeabilities in the range of 15 to 25 cubic feet per minute per square foot have been successfully operated at filter velocities of approximately 2 feet per minute to control emissions from beryllium-copper foundries.

3.4 MANUFACTURE OF BERYLLIUM CERAMIC PRODUCTS

Three domestic ceramic manufacturing plants, in addition to the beryllium extraction plants, produce beryllium oxide ceramic stock material. Hundreds of companies, the majority in the electronics industry, purchase ceramic stock and special ceramic forms, and subsequently convert these into finished products. It is estimated that approximately 5 percent of total domestic beryllium production was used in ceramic manufacture in

1970.[1] The consumption of beryllia ceramics is expected to increase by more than 10 percent per year for the next 5 years.[1,13]

3.4.1 Ceramic Production and Emissions

The production of beryllium oxide ceramic materials at beryllium extraction plants is briefly described in Section 3.1.4.4. Other plants manufacture beryllium ceramics from low-fired beryllium oxide as the initial raw product. Figure 3-14 illustrates the sequence of processing operations at a typical beryllium ceramic plant; the basic steps are as follows:

1. The raw material (beryllium oxide) is received and weighed.
2. The beryllium oxide is ball-milled to a size that is determined by its end use. The particular end application also dictates which binders, such as water, polyvinyl alcohol (PVAL), and polyethylene glycol (PEG), should be added to aid in processing the oxide. Dyes are placed into the material to code it for specific applications.
3. The material is screened to minus 200 mesh.
4. Spray drying is carried out by pumping the oxide into a counter current stream of dry air which has a temperature range of approximately 80° to 150° Celsius. The product is collected by negative pressure at the base of the enclosed spray drying chamber or by particulate collection equipment such as a fabric filter.
5. The dried oxide is discharged either to a dry screening operation or to a process in which additional binders are added to produce extrusion-grade beryllium oxide. In the extrusion process, material is forced through dies to create desired cross-sectional shapes.
6. Material that is not extruded is passed through a dry screening ferro filter to remove undesired material.

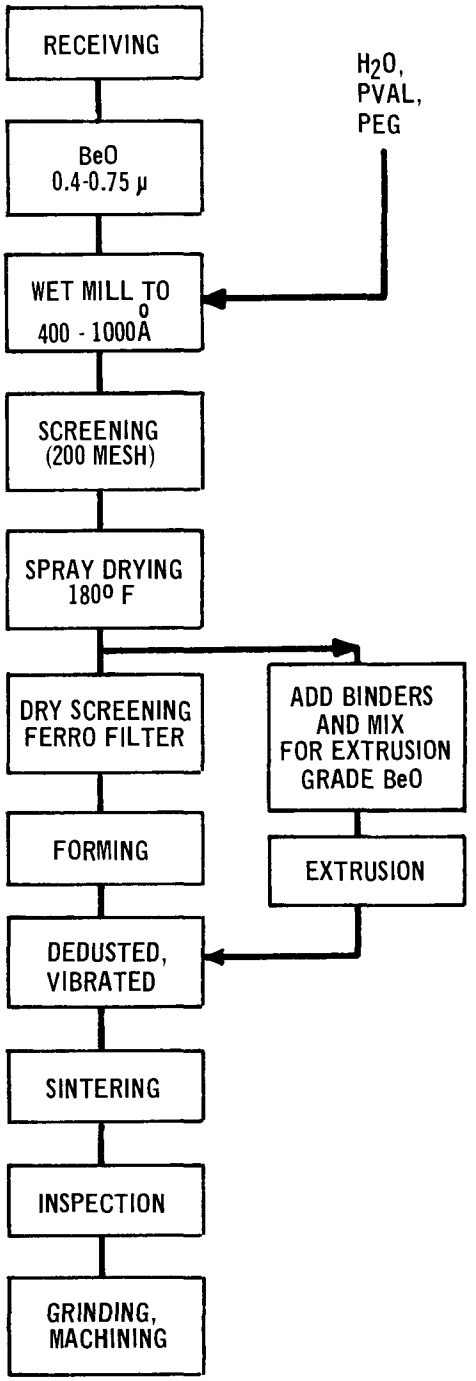

Figure 3-14. Manufacture of beryllium oxide ceramic products.

7. Forming of the oxide is carried out in high-pressure presses enclosed in a negative-pressure dry box. Isostatic forming, which applies uniform pressure to all surfaces of an article, ensures the attainment of uniform density of the pressed form.
8. All extruded or formed material is dedusted and then sintered to volatilize the binders (water, PVAL, and PEG). Kilns are either electric or gas fired, and no measures are usually taken to collect emissions of the binders.
9. The ceramic articles are inspected and then subjected to various machining operations, for example, drilling, grinding, and lapping. Other production processes include metallizing, brazing, and soldering.

Emissions of beryllium-containing material from ceramic manufacturing plants are almost entirely in the forms of dust, fume, and mist that contain beryllium oxide. Table 3-5 lists potential beryllium emission sources and indicates the presence of beryllium oxide and other emissions.

Table 3-5. SOURCES OF BERYLLIUM CERAMIC PLANT EMISSIONS

Source	Emissions
Spray dryer	Water Beryllium oxide
Dry boxes	Beryllium oxide
Kilns	Beryllium oxide Binders Water
Machining	Beryllium oxide Binders Water Cutting fluids
Development laboratory	Traces of acids Beryllium oxide Binders

3.4.2 Emissions Control Techniques

Emissions from beryllium ceramic plants can be controlled by the use of primary solid particulate collectors and HEPA filters operated in tandem. The submicron size of the beryllium oxide powder used in these plants is an important factor in considering the application of HEPA filters for final filtering. Fiber glass or expanded metal prefilters installed at dry boxes and ventilation hoods can provide effective initial collection of larger particulates. It is accepted practice to operate primary HEPA filters in close proximity downstream from these prefilters even when the composite air stream formed by manifolding together numerous individual emission control streams is passed through a second HEPA filter unit prior to exhaust into the atmosphere as illustrated in Figure 3-15.[14] The second HEPA filter unit is also protected by an appropriate prefilter. In at least one instance, an electrostatic precipitator has been employed as a primary filter in combination with HEPA filters for final collection. The primary filtering of effluents from spray driers can be performed by fabric filters as illustrated in Figure 3-16. Combustion gases generated for heating fuel-fired kilns can be exhausted to the atmosphere independently of beryllium-containing process streams.

3.5 BERYLLIUM PROPELLANT MANUFACTURE, TESTING, AND DISPOSAL

A common method of increasing solid-propellant-rocket-motor performance is the inclusion of finely divided metals in the polymer matrix of the propellant. Beryllium is ideally suited to this application because it possesses an extremely high heat of reaction. The specific impulse of rocket motors is significantly increased by the inclusion of beryllium. (The specific impulse is the time integral of the thrust produced by a rocket motor divided by the total mass of propellant.)

3.5.1 Propellant Manufacture

3.5.1.1 Process

Propellant manufacturing facilities typi-

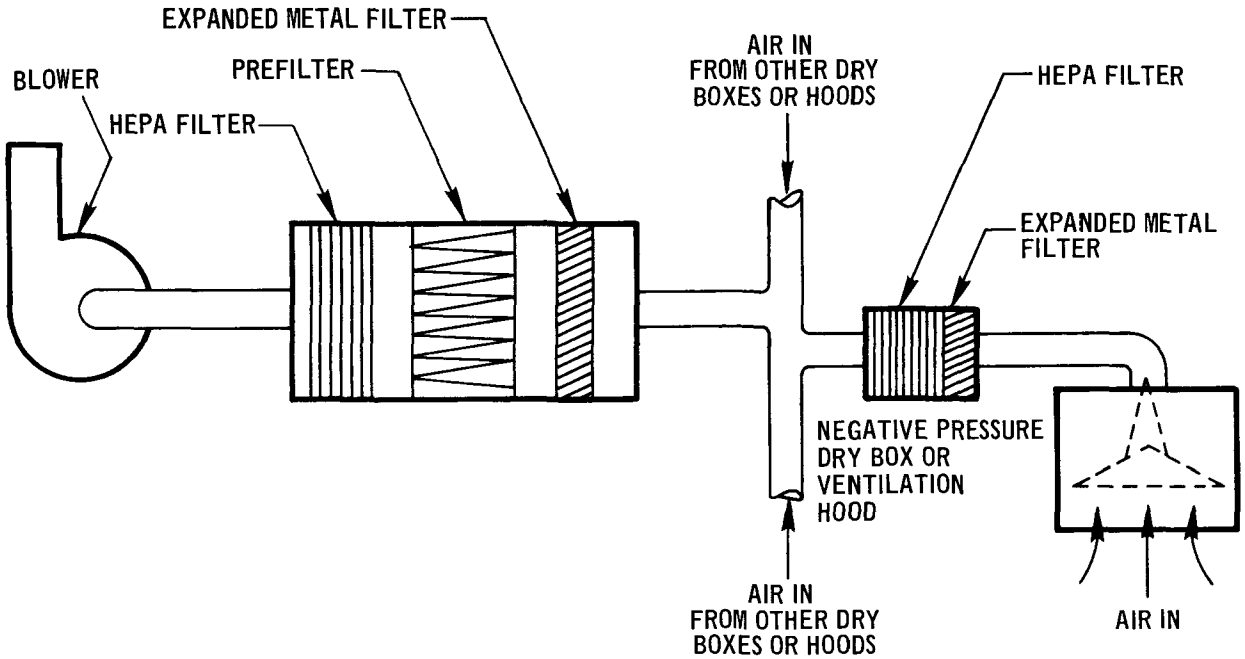

Figure 3-15. Configuration of emission control devices for beryllium ceramic plant.[14]

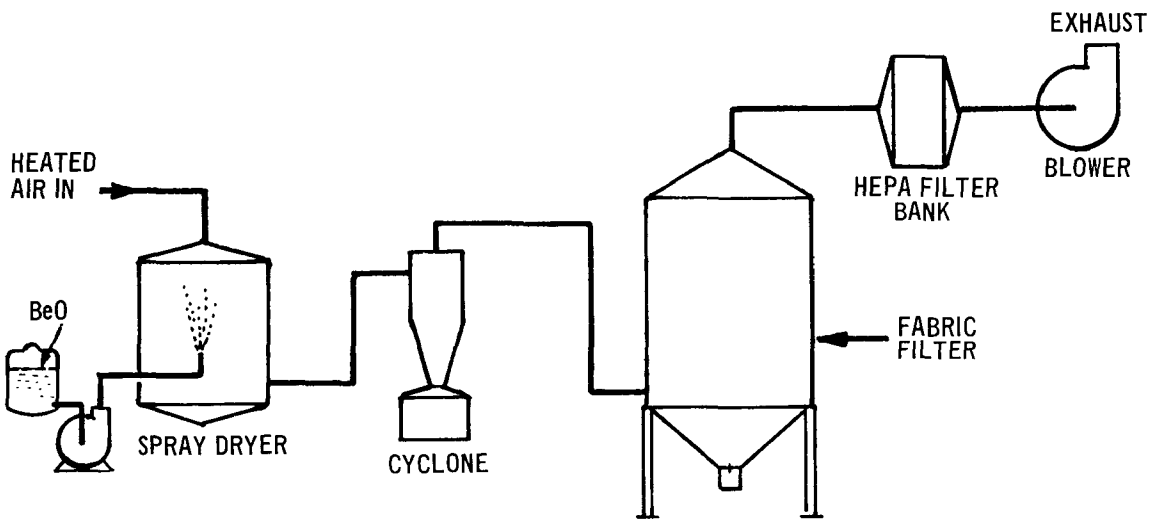

Figure 3-16. Emission control devices for spray dryer.

cally receive beryllium powder in plastic bottles that have been shipped in steel drums. The powder is weighed and charged into a high-shear mixer (dough mixer) into which binders and oxidizers have been added. Subsequently, the propellant ingredients are blended for a measured period of time to form a homogeneous mixture of components. The beryllium powder does not undergo chemical reaction during the mixing or during later phases of propellant fabrication.

Upon completion of the mixing cycle or cycles, the propellant is cast directly into the rocket-motor case, or a mold of the desired shape, and oven-cured at temperatures that range from ambient to 80° Celsius. The

propellant binders and crosslinking agents react during curing to form a hard rubber-like material, which may be trimmed or machined into the final configuration.

3.5.1.2 Emissions

Potential sources of beryllium emissions from the manufacture of beryllium-containing propellant include:

1. Handling, weighing, and charging into mixers of dry beryllium powders.
2. Mixing of propellant ingredients.
3. Casting of propellant into molds.
4. Curing, or polymerization, of propellant.
5. Releasing of propellant from molds.
6. Sawing, trimming, machining, and perforating of propellant.

Facilities which manufacture beryllium propellant have demonstrated the capability for effective control of atmospheric beryllium emissions.

3.5.1.3 Emissions Control Techniques

Potential emissions from beryllium propellant manufacturing process operations not shielded from adjacent work spaces can be captured by local ventilation hoods. Some operations, such as material weighing and emission-producing quality control tests, can be performed in ventilated dry boxes.

Beryllium-containing particulates entrained in the emission control air streams cited above can be effectively removed by the use of HEPA filters. Operations, such as machining, that produce relatively large concentrations of larger particulates require that a prefilter or mechanical collector be placed upstream from the HEPA filters.

3.5.2 Beryllium-Rocket-Motor Static Test Firing

3.5.2.1 Process

Beryllium rocket motors are test fired statically in order to verify calculated performance characteristics and establish reliability of motors. Tests are performed on motors which contain quantities of propellant ranging from less than ten to several thousand pounds. The total amount of beryllium propellant employed in these activities can be gauged by observing that propellant containing approximately 8700 pounds of beryllium was static fired, or aborted in static firings, at one of the major test facilities during the period from March 1963 through October 1967.

3.5.2.2 Emissions

The combustion of beryllium rocket propellant during a static test firing produces heated gases that may contain such beryllium compounds as beryllium oxide, beryllium nitrate, beryllium carbide, and beryllium chloride;[15] other beryllium compounds can also be formed. The potential beryllium emissions are characterized by discharge over a short duration of time and containment in a gas stream with relatively high mass flow rate.

In numerous static tests of beryllium rocket motors, the combustion products have been exhausted directly into the atmosphere without treatment to remove air contaminants. However, attempts have been made to minimize adverse effects of these contaminants by performing many tests, under favorable meteorological conditions, at sites that are remote from locations of human activity. In some cases, the resultant concentrations of beryllium in the vicinity of the test area have been monitored.

3.5.2.3 Emission Control Techniques

One approach to the control of atmospheric emissions from test firing of rocket motors is the collection of all products of combustion in a sealed container and the subsequent cleaning of the particulate-laden gas stream as it is released from the container at a much smaller mass rate of flow. A facility of this type, including a tank 40 feet in length by 10 feet in diameter and HEPA filters for gas cleaning, has been successfully used to control emissions from the test firing of 50-pound beryllium rocket motors.

A second method of controlling atmospheric emissions of beryllium from test firing of rocket motors is the application of

a gas-cleaning device to treat the products of combustion as these are exhausted from the motor. A subscale gas-cleaning unit, which includes a water-spray cooling duct followed by a cyclone water-spray scrubber, has been reported to have a particulate control efficiency of greater than 99.9 percent for rocket-motor flow rates of up to 10 pounds per second.[16] The further development of scrubbers of this type has permitted the static testing of approximately 100-pound charges of propellant at mass flow rates of up to 30 pounds per second.

Emissions from beryllium-rocket-motor test firing have also been controlled, by use of water sprays for cooling and for subsequent gas scrubbing, in the absence of a downstream cyclone-type collector. A shell-and-tube heat exchanger (Figure 3-17) has been reported to be an effective impingement collector for beryllium-containing mist during tests of propellant charges as large as 170 pounds.[17] Even though a particulate collection efficiency of 99.98 percent has been reported for a scrubbing system of the type shown in Figure 3-17, including collection in the heat exchangers and gas compressors,[17] HEPA filters have been utilized as final collectors before exhaust to the atmosphere. A coarse screen impingement separator protects the HEPA filters by removing any entrained water that may be present in the compressor exhaust.

The use of water scrubbers to control beryllium emissions during rocket motor test firings requires extremely large water flow rates. These would be prohibitively large for the testing of the largest proposed full-scale propulsion motors, for example, an estimated 3 million gallons per minute for a 350,000-pound-thrust beryllium rocket motor.[17] The beryllium contamination of a test facility, including ejectors, heat exchangers, and compressors, is also a disadvantage of this emission control method because special personnel protection must be employed during maintenance of equipment.

3.5.3 Disposal of Beryllium Propellant

3.5.3.1 Process and Emissions

Beryllium-containing wastes are generated during the manufacture of beryllium solid propellant. These wastes must be disposed of in a manner which controls any accompanying atmospheric emissions of beryllium.

In numerous cases, the disposal of beryllium propellant waste has been accomplished by open burning. Disposal has been carried out at sites remote from human activity, under meteorological conditions favorable to

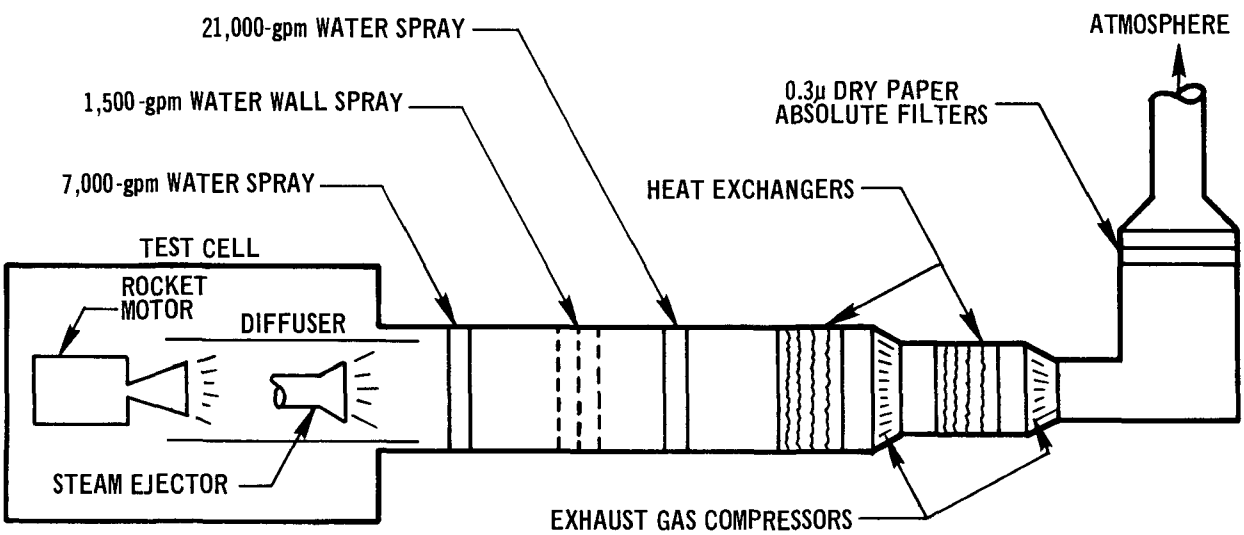

Figure 3-17. Schematic diagram of rocket motor test cell.[18]

rapid dispersion, to minimize adverse effects of the resulting beryllium contaminants.

3.5.3.2 Control Techniques

The susceptibility of waste propellant to explosion excludes burial as a suitable method of disposal. However, the deliberate explosion of beryllium propellant can be carried out in an enclosed tank, and atmospheric beryllium emissions can be controlled by exhausting the resultant gases, at a controlled flow rate, through HEPA filters. This method has been successfully used to dispose of small quantities of beryllium propellant.

Section 3.6 contains a more detailed discussion of the disposal of beryllium-containing wastes.

3.6 DISPOSAL OF BERYLLIUM-CONTAINING WASTES

3.6.1 Process

Beryllium-contaminated single-service filters, fabric filter precoat materials, clothing, rags, brushes, and plastic bags, frequently wetted with oil or other liquids, are generated by industrial beryllium activities and must undergo disposal. The disposal of beryllium propellant and some beryllium-containing wastes generated by the manufacture of propellant is complicated by the explosive character of the materials.

Beryllium-contaminated wastes are currently disposed of by numerous methods. Some examples are:

1. Burial in a designated dump owned by the company that generates the wastes.
2. Burial in a segregated portion of a city or county dump.
3. Encasement of irradiated, beryllium-containing material in concrete and subsequent burial.
4. Burial at sites controlled by the United States Government.
5. Burial at sites managed for the disposal of toxic materials.
6. Storage in abandoned underground mines.
7. Incineration at facilities owned by the company that generates the wastes.

Significant quantities of beryllium-containing wastes, including beryllium propellant, have also been disposed of by open burning. At the other extreme, large quantities of beryllium-containing materials removed by machining processes and subsequently collected by gas-cleaning devices are routinely sold for reprocessing into raw materials.

3.6.2 Emissions

Atmospheric beryllium emissions can occur during the handling and packaging of wastes, during transport to a disposal site, and in the process of carrying out ultimate disposal. Much of the beryllium-containing waste is packaged in plastic bags, metal drums, or plastic drums and is adequately sealed to control emissions during transportation and during initial deposition of those material that undergo ultimate disposal at dumping and burial sites.

3.6.3 Control Techniques

If beryllium waste materials are incinerated, the products of combustion should be subjected to gas cleaning prior to discharge into the atmosphere. Wet scrubbers can be employed for gas cooling and primary collection of particulate contaminants; HEPA filters can perform efficient secondary collection. An incinerator with this type of beryllium emission control equipment is now under construction.[18]

Beryllium-contaminated wastes are preferably enclosed in plastic bags or containers and then sealed in metal drums prior to deposit and burial at a dump area. A burial site that will not be subject to uncovering of the waste at a later date should be chosen, and a portion of the site should be reserved and clearly marked for the disposal of beryllium-contaminated wastes only. If the burial site management is not under the control of those persons who have released material for disposal, then those persons should verify that appropriate disposal techniques are practiced.

Beryllium propellant can be chemically reclaimed on a full-scale basis at a cost of approximately $100 per pound of propellant.[19] However, this process has not yet been adopted as a waste disposal method and is uneconomical for small quantities. Relatively small quantities of beryllium propellant can be burned or exploded in a closed container to convert the solid waste propellant into a particulate-containing gas from which the contaminants can be removed by a gas-cleaning device. Charges of propellant as large as 10 pounds have been exploded in a sealed underground tank; emissions have been controlled by the subsequent venting of the tank contents through HEPA filters.[19]

3.7 REFERENCES FOR SECTION 3

1. Heindle, R. A. Beryllium. In: Mineral Facts and Problems (1970 Ed.). U. S. Department of Interior, Bureau of Mines. Washington, D. C. Bulletin 650. 1970. p. 494,497.
2. Crocker, L., R. O. Dannenberg, D. W. Bridges, and J. B. Rosenbaum. Recovery of Beryllium from Spor Mountain, Utah, Ore by Solvent Extraction and Caustic Stripping. U. S. Department of Interior, Bureau of Mines. Washington, D. C. Report of Investigations 6173. 1963. 27 p.
3. Dannenberg, R. O., L. Crocker, and D. W. Bridges. Expanded Investigation of Beryllium Solvent Extraction of Spor Mountain, Utah, Ore. U. S. Department of Interior, Bureau of Mines. Washington, D. C. Report of Investigations 6469. 1963. 31 p.
4. Silverman, L. Control of Neighborhood Contamination Near Beryllium-Using Plants. AMA Arch. Ind. Health. *19*:176, 1959.
5. Control Techniques for Particulate Air Pollutants. U. S. Department of Health, Education, and Welfare, National Air Pollution Control Administration. Washington, D. C. NAPCA Publication No. AP-51. January 1969. p. 47.
6. Trends in Usage of Beryllium and Beryllium Oxide. National Research Council. Washington, D. C. Materials Advisory Board Report MAB-238. February 1968. p. 4.
7. Snider, R. E. and J. F. Kahles. Machining Data for Beryllium Metal. Air Force Machinability Data Center. Cincinnati, Ohio. AFMDC 66-3. June 1966.
8 Hammond, S. E. and J. E. Hill. Beryllium Control at Rocky Flats. U. S. Atomic Energy Commission, Washington, D. C. Report RFP-384, USAEC Contract AT (29-1)-1106. April 1964. p. 10-11
9. Breslin, A. J. and W. B. Harris. Health Protection in Beryllium Facilities, Summary of Ten Years of Experience. U. S. Atomic Energy Commission, New York Operations Office. New York, N. Y. USAEC Report HASL-36. May 1, 1969. p. 11-21.
10. Dieringer, L. F. Health Control Program in a Beryllium Facility, 3 Years' Experience. J. Occupational Med. *7(9)*:457-460, 1965.
11. Fire Protection Guide on Hazardous Materials (2nd Ed.). National Fire Protection Association. Boston, Mass. 1967. p. 46-49.
12. Hardy, H. L. Statement to Subcommittee on Air and Water Pollution of the Committee on Public Works, U. S. Senate, 89 Session, Second Session on S.3112. Washington, D. C. June 1966.
13. Schilling, S. A. Beryllium. Eng. Mining J. *171*:116-117, March 1970.
14. Wolff, C. T. Private communication to J. Desantis, U. S. Environmental Protection Agency, Research Triangle Park, N. C. American Lava Corporation, Chattanooga, Tenn. October 14, 1971.
15. Beardall, J. S. and N. L. Eatough. Evaluation of Subscale Rocket Exhaust Gas Scrubber. Hercules Powder Company, Bacchus Works. Magna, Utah. Report No. HPC-050-12-1-53. December 1963. p. 1.

16. Industrial Hygiene Functions in the Manufacture of Beryllium Propellants Safety Department, Hercules Incorporated, Bacchus Works. Magna, Utah. October 11, 1968. p. 6-8.
17. LaBlonde, C. J. and D. W. Male. Control of the Toxic Effluents from Beryllium Rocket Motors during Simulated Altitude Testing. Arnold Engineering Development Center, Air Force Systems Command. Tullahoma, Tenn. TN37389. March 1972. p. 8, 18.
18. Private Communication to J. F. Peoples, U. S. Environmental Protection Agency, Research Triangle Park, N. C., from a beryllium processing company.
19. Christofano, E. E. Private Communication to J. F. Peoples, U. S. Environmental Protection Agency, Research Triangle Park, N. C. Hercules Incorporated, Wilmington, De. June 28, 1971.

4. COSTS OF BERYLLIUM EMISSION CONTROL

The analyses of emission control costs that are presented in this section are based upon the costing method discussed in References 1 and 2. Accordingly, the costs of emission control are separated into three categories:[1]

1. Capital investment.
2. Operating and maintenance costs.
3. Capital charges.

The installed cost of an emission control system includes charges for the following items:

1. Control equipment.
2. Transportation of equipment.
3. Auxiliary equipment and materials such as fans, motors, control instrumentation, ductwork, and piping.
4. Clarifiers and liquid treatment systems for wet collectors.
5. Insulation material.
6. Site preparation.
7. Field installation.

Maintenance cost is defined as the expenditure required to sustain the operation of a system at its designed collection efficiency with a scheduled maintenance program and the prompt replacement of any defective parts. Total operating cost depends upon the following parameters:

1. Volumetric flow rate of gas that requires cleaning.
2. Pressure differential across control system
3. Duration of control system operation.
4. Consumption and unit cost of electricity.
5. Consumption and unit cost of scrubbing liquor.
6. Maintenance costs.

The annual operating cost for a continuous-duty emission control system is based upon 8760 hours of operation. The annual cost of emission control is the depreciation of the capital investment for purchase and installation of control equipment divided by the expected life of the equipment plus the annual capital charges (interest, taxes, and insurance) and the annual total operating cost.

The specific installed costs of control systems that are cited in the following sections have been estimated by the method outlined above, except in instances for which actual costs were available. The estimated costs are accurate to within ± 50 percent in most cases. However, wide variations in engineering design among specific collectors of a given type and in freight rates, gas stream characteristics, construction codes, and labor rates can occasionally produce less accurate estimates. Because many facilities consider it impractical to maintain detailed records of operating and maintenance costs for control equipment, the costs presented in this section are estimated values rather than actual ones.

The cost data presented in Reference 2 are based upon March 1968 prices and wages. The increases in wholesale commodity prices of metals and metal products and increases in employment earnings have been used to adjust costs to February 1972; cost increases of 21, 26, and 17 percent were determined, respectively, for installed costs, maintenance costs, and power costs.

4.1 BERYLLIUM EXTRACTION PLANTS

The basic processes in the primary production of beryllium are discussed in Section 3.1, and appropriate classes of emission control devices are described in Section 3.1.5.2.

Figures 3-1 through 3-7 provide details of locations, types, and capacities of individual gas-cleaning devices that can control emissions from the numerous sources in extraction plants. Installed costs, annual maintenance costs, and annual power costs for emission control are shown in Tables 4-1 through 4-8.

4.2 BERYLLIUM METAL, BERYLLIUM OXIDE, AND BERYLLIUM-COPPER ALLOY MACHINE SHOPS

The installed cost of emission control equipment for small beryllium-material machining facilities can be greater than 10 percent of the cost of machining equipment. For example, a specific packaged gas-cleaning unit that has the capability for controlling emissions from three lathes or milling machines is rated at 600 cubic feet per minute (6 inches of water pressure differential) and has an installed cost of approximately $4000. The unit includes a multiple cyclone, prefilter, HEPA filter, 5-horsepower fan and motor, valves, adapters for emptying collected particulates into disposal drums, and structural supports.

The installed cost of emission control equipment for large beryllium or beryllium oxide machine shops is usually less than 10 percent of the total value of machining equipment. The estimated control costs listed in Table 4-9 apply to a beryllium machining facility equipped with approximately 100

Table 4-1. EMISSION CONTROL COSTS FOR CONVERSION OF ORE TO BERYLLIUM HYDROXIDE BY SULFATE PROCESS

Equipment class	Type	Gas flow rate, cfm[a]	Annual maintenance cost, $	Annual power cost, $[b]	Installed cost, $	Annual operating cost, $
Fabric filter	Shaker	5,000	495	450	16,935	945
Ejector-venturi scrubber, 2 each	High energy	1,250 each	200	3,175	17,640	3,375
Dry cyclone	High efficiency	2,500	75	225	3,635	300
Fabric filter	Pulse jet	450	55	60	3,025	115
Fabric filter	Shaker	5,000	495	450	16,935	945
Packed tower scrubber, 2 each	Med. high energy	1,200 each	175	1,015	12,095	1,190
Ejector-venturi scrubber, 2 each	High energy	1,200 each	175	3,060	17,640	3,235
Hydraulic scrubbing tower, 2 each	Med. high energy	1,200 each	175	685	7,255	860
Packed tower scrubber	Med. high energy	6,400	475	2,705	12,095	3,180
TOTAL			2,320	11,825	107,255	14,145

[a] Actual flow rate. Capacity flow rates are as much as 30 percent higher; where known, they are used for installed cost estimates.

[b] Makeup water is included in power cost.

Table 4-2. EMISSION CONTROL COSTS FOR CONVERSION OF ORE TO BERYLLIUM HYDROXIDE BY FLUORIDE PROCESS

Equipment class	Type	Gas flow rate, cfm[a]	Annual maintenance cost, $	Annual power cost, $[b]	Installed cost, $	Annual operating cost, $
Fabric filter	Reverse jet	12,600	1,265	2,250	26,670	3,515
Dry cyclone	High efficiency	750	25	70	2,425	95
Dry cyclone,[c] fabric filter	Combined; conveying	1,000	140	1,325	7,255	1,465
Fabric filter	Reverse jet	5,000	500	1,005	11,235	1,505
Venturi scrubber	High energy	2,000	165	2,675	14,555	2,840
Dry cyclone	High efficiency	2,700	85	235	3,630	320
Fabric filter	Pulse jet	3,900	375	505	11,235	880
Hydraulic scrubbing tower	Med. high energy	6,000	225	1,840	24,190	2,065
	TOTAL		2,780	9,905	101,195	12,685
Fabric filter[d]	Shaker	1/3 x 65,000	2,150	2,920	28,250	5,120

[a]Actual flow rates. Capacity flow rates are as much as 30 percent higher; where known, they are used for installed cost estimates.

[b]Makeup water is included in power cost.

[c]This collector is placed in series with the first four items of the table and serves additional sources in the plant. The Orlon bags, precoated with asbestos floats, perform secondary cleaning of "dry" exhaust gases. The flow is as follows: 1/3 from the fluoride process, 1/6 from the $Be(OH)_2$-to-billet process, 1/6 from a research facility, and 1/3 from a $be(OH)_2$ purification process.

[d]A unitized dry-cyclone fabric filter (manual-shaker type), used also for pneumatic transfer of dust collection at about 60 inches of water pressure loss.

machines that range in type from automatic chuckers and tracer mills to conventional lathes. Seven individual fabric-filter installations with a combined capacity of 7900 cubic feet per minute are included in the gas-cleaning system. The installed cost per unit of gas-handling capacity for this installation is relatively high in comparison with that for fabric filters. This results from the use of small-diameter pipes to convey emission streams at high velocity and from the use of low-permeability (4 to 4.5 cubic feet per minute per square foot) fabrics.

An important consideration in determining the total annual air pollution control costs for beryllium metal machining facilities is the resale value of beryllium collected by gas-cleaning devices. In most beryllium dry-machining operations, these waste products provide a significant monetary return.

Table 4-3. EMISSION CONTROL COSTS FOR CONVERSION OF BERTRANDITE ORE TO BERYLLIUM HYDROXIDE

Equipment class	Type	Gas flow rate, cfm[a]	Annual maintenance cost, $	Annual power cost, $[b]	Installed cost, $	Annual operating cost, $
Dry cyclone, 4 each	High efficiency	600 each	75	215	7,745	290
Fabric filter, 2 each[c]	Shaker	1,200 each	250	255	12,095	505
Ejector-venturi scrubber, 16 each[d]	High energy	600 each	725	12,210	87,360	12,935
Fabric filter[c]	Shaker	2,000	300	275	12,095	575
Fabric filter[c]	Shaker	30,000	3,505	4,705	48,385	8,210
TOTAL			4,855	17,660	167,680	22,515

[a]Actual flow rates. Capacity flow rates are as much as 30 percent higher; where known, they are used for installed cost estimates.

[b]Makeup water is included in power cost.

[c]One fabric filter (30,000 cfm) is an ultra collector precoated with asbestos floats.

[d]The ejector-venturi scrubber is 8-inch size, operates at 100 psig water pressure and provides a 4-inch water-gauge pressure decrease.

For example, the beryllium collected by the control system discussed in the last paragraph had an annual resale value slightly less than the cost of the emission control equipment.

4.3 BERYLLIUM-COPPER ALLOY FOUNDRIES

One estimate of emission control costs for beryllium-copper alloy foundries is shown in the last two cost items of Table 4-7; the data apply to the production, in a beryllium-extraction facility, of a 2 percent beryllium-copper alloy by melting copper chips together with a 4 percent master alloy previously produced at the same facility. For individual foundries that use beryllium-copper alloy ingots as a raw material, the total installed cost of adequate emission control equipment will, in most cases, not exceed 13 percent of the capital investment for plant equipment.

Estimated emission control costs for a specific beryllium-copper alloy foundry are listed in Table 4-10. This foundry intermittently processes more than 60,000 pounds per year of beryllium-copper alloy, even though the foundry capacity based upon continuous operation would be much larger than this figure. In order to relate the size of the foundry operation to the gas-handling capacity of the control system, it should be noted that the melting capacity is 2000 pounds of alloy per batch.

4.4 MANUFACTURE OF BERYLLIUM CERAMIC PRODUCTS

HEPA filters are frequently used as final collectors by beryllium ceramic-manufacturing facilities, as noted in Section 3.4.2. A composite filter bank assembled from four HEPA filter units, each measuring 2 by 2 feet, has a rated capacity of 4500 cubic feet per minute of air at an initial pressure decrease of 1 inch of water. The total installed cost of such a filter installation ranges from $1100 to $1500, and replacement filters are priced from $80 to $120

Table 4-4. FIRST EXAMPLE OF EMISSION CONTROL COSTS FOR CONVERSION OF BERYLLIUM HYDROXIDE TO BERYLLIUM BILLETS

Equipment class	Type	Gas flow rate, cfm[a]	Annual maintenance cost, $	Annual power cost, $[b]	Installed cost, $	Annual operating cost, $
Hydraulic scrubbing tower	Med. high energy	1,000	75	245	3,275	320
Hydraulic scrubbing tower	Med. high energy	1,325	100	330	4,000	430
Ejector-venturi scrubber, 2 each	High energy	1,250 each	200	3,175	17,640	3,375
Venturi scrubber	High energy	1,600	125	2,035	12,095	2,160
Ejector-venturi scrubber, 6 each	High energy	270 each	125	2,085	18,900	2,210
Venturi scurbber, 2 each	High energy	4,500 each	675	11,375	36,290	12,050
Ejector-venturi scrubber, 5 each	High energy	1,500 each	625	7,950	44,000	8,575
Fabric filter	Bag collapsing	9,500	950	845	21,785	1,795
Dry cyclone	High efficiency	600	25	60	1,945	85
	TOTAL		2,900	28,100	159,930	31,000
Fabric filter[c]	Shaker	1/6 x 65,000	1,070	1,330	14,120	2,400

[a]Actual flow rate. Capacity flow rates are as much as 30 percent higher; where known, they are used for installed cost estimates.

[b]Makeup water is included in power cost.

[c]This collector serves additional sources in the plant. The Orlon bags, precoated with asbestos floats, perform secondary cleaning of "dry" exhaust gases. The flow is as follows: 1/3 from the fluoride process, 1/6 from the $Be(OH)_2$-to-billet process, 1/6 from a research facility, and 1/3 from a $Be(OH)_2$ purification process.

each. When the HEPA filters are effectively protected by prefilters and/or mechanical collectors, the average lifetime of a filter is at least 1 year.

A specific beryllium ceramic fabrication plant that processes 10,000 pounds per year of beryllium oxide is capable of exhausting 50,000 cubic feet of air per minute. The estimated installed costs and annual operating costs of several alternate control systems are given in Table 4-11; each system utilizes HEPA filters for final collection, but it is possible to use fabric filters as secondary collectors. The total installed costs range from $36,000 to $115,000, and the annual operating costs range from $13,000 to $23,000.

Table 4-5. SECOND EXAMPLE OF EMISSION CONTROL COSTS FOR CONVERSION OF BERYLLIUM HYDROXIDE TO BERYLLIUM BILLETS

Equipment class	Type	Gas flow rate, cfm[a]	Annual maintenance cost, $	Annual power cost, $[b]	Installed cost, $	Annual operating cost, $
Packed tower scrubber	Med. high energy	7,000	530	2,940	19,395	3,470
Fabric filter	Pulse jet	1,500	150	215	5,250	365
Packed tower scrubber, 9 each	Med. high energy	160 each	225	665	15,255	890
Orifice scrubber	Low energy	10,000	750	1,690	9,080	2,440
Ejector-venturi scrubber, 2 each	High energy	1,200 each	190	3,060	17,640	3,250
Packed tower scrubber, 2 each	Med. high	7,000 each	1,050	5,935	36,290	6,985
Floating bed scrubber, 2 each	Med. high	1,200 each	175	510	8,715	685
Packed tower scrubber	Med. high energy	21,000	1,580	8,895	29,085	10,475
Fabric filter	Shaker	17,000	1,700	1,510	26,640	3,210
	TOTAL		6,350	25,420	167,350	31,770

[a]Actual flow rates. Capacity flow rates are as much as 30 percent higher; where known, they are used for installed cost estimates.

[b]Makeup water is included in power cost.

The effective control of beryllium emissions from a beryllium oxide ceramic-manufacturing facility can be attained at a total installed cost for control equipment that does not exceed 10 percent of the value of the plant.

4.5 BERYLLIUM PROPELLANT MANUFACTURE

Because beryllium propellant has not been developed or manufactured on a large scale, little information is available on the costs that would be required to control emissions from manufacturing facilities. The costs of HEPA filters discussed in Section 4.4 are applicable also to propellant manufacturing plants. A preliminary evaluation of installed costs of actual emission control systems that provide adequate control indicates that expenditures have ranged from $25,000 to $50,000 per manufacturing facility; this is a small percentage of the total installed cost of production equipment in each facility.

As stated in Section 3.5.2, the control of emissions during the static firing of beryllium rocket motors is a unique problem because large volumes of high-temperature exhaust gases must be cleaned during short intervals of time. No specific air pollution control cost data for a production-rocket qualification

Table 4-6. EMISSION CONTROL COSTS FOR CONVERSION OF BERYLLIUM BILLETS TO BERYLLIUM METAL FORMS

Equipment class	Type	Gas flow rate, cfm[a]	Annual maintenance cost, $	Annual power cost, $[b]	Installed cost, $	Annual operating cost, $
Dry cyclone	High efficiency	1,000	35	95	2,415	130
Hydraulic scrubbing tower	Med. high energy	6,000	225	1,835	24,190	2,060
Dry cyclone, 18 each	High efficiency	600 each	340	965	34,840	1,305
Fabric filter, 2 each	Reverse jet	21,000 each	4,280	6,710	53,235	10,990
TOTAL			4,880	9,605	114,680	14,485

[a]Actual flow rates. Capacity flow rates are as much as 30 percent higher; where known, they are used for installed cost estimates.

[b]Makeup water is included in power cost.

Table 4-7. EMISSION CONTROL COSTS FOR CONVERSION OF BERYLLIUM HYDROXIDE TO BERYLLIUM ALLOYS

Equipment class	Type	Gas flow rate, cfm[a]	Annual maintenance cost, $	Annual power cost, $[b]	Installed cost, $	Annual operating cost, $
Fabric filter	Shaker	1,500	150	140	6,050	290
Fabric filter, 2 each	Shaker	2,500 each	500	450	16,935	950
Fabric filter		400	35	40	3,025	75
Dry cyclone	High efficiency	5,000	165	450	5,325	615
Dry cyclone	High efficiency	400	15	40	1,450	55
Fabric filter, 2 each	Reverse jet	11,000 each	2,205	3,415	43,545	5,620
Particle settling chamber, 3 each	Low efficiency	2,500 each	100	40	965	140
Fabric filter	Reverse jet	12,000	1,200	1,860	22,985	3,060
TOTAL			4,370	6,435	100,280	10,805

[a]Actual flow rates. Capacity flow rates are as much as 30 percent higher; where known, they are used for cost estimates.

[b]Makeup water is included in power cost.

program have been determined. However, the use of large-scale, high-efficiency water scrubbers for emission control would be very costly because extremely high water flow rates would be required.

4.6 REFERENCES FOR SECTION 4

1. Edmisten, N. G. and F. L. Bunyard. A Systematic Procedure for Determining the Cost of Controlling Particulate Emissions from Industrial Sources. J. Air Pollut. Contr. Assoc. *20*(7):446-452, July 1970.
2. Control Techniques for Particulate Air Pollutants. U. S. Department of Health, Education, and Welfare, National Air Pollution Control Administration. Washington, D. C. NAPCA Publication No. AP-51. January 1969. p. 155-182.

Table 4-8. EMISSION CONTROL COSTS FOR CONVERSION OF BERYLLIUM HYDROXIDE TO BERYLLIUM OXIDE AND CERAMICS

Equipment class	Type	Gas flow rate, cfm[a]	Annual maintenance cost, $	Annual power cost, $[b]	Installed cost, $	Annual operating cost, $
Fabric filter	Shaker	1,000	110	165	6,655	275
Packed tower scrubber	Med. high energy	3,000	225	1,275	12,095	1,500
Packed tower scrubber	Med. high energy	5,000	375	2,065	16,945	2,440
Packed tower scrubber	Med. high energy	12,000	905	5,085	26,640	5,990
Fabric filter, 2 each	Reverse jet	300 each	65	50	7,265	115
Fabric filter	Shaker	1,100	110	165	6,655	275
Fabric filter	Reverse jet	1,800	190	285	7,865	475
Fabric filter	Pulse jet	300	35	50	2,415	85
Mist collector, 6 each[c]	Mist collector	7,150	225	1,050	4,840	1,275
TOTAL			2,240	10,190	91,375	12,430

[a]Actual flow rates. Capacity flow rates are as much as 30 percent higher; where known, they are used for installed cost estimates.

[b]Makeup water is included in power cost.

[c]For operations such as wet grinding; four sized for 625 cubic feet per minute, one for 1050 cubic feet per minute, and one for 3600 cubic feet per minute.

Table 4-9. EMISSION CONTROL COSTS FOR BERYLLIUM MACHINE SHOP

Item	Cost, $
Emission control equipment	50,000
Air conditioning with special filters[a]	40,000
Installation	35,000
Annual maintenance	20,000
Annual power	12,000

Table 4-10. EMISSION CONTROL COSTS FOR BERYLLIUM-COPPER ALLOY FOUNDRY

Equipment class	Type	Gas flow rate, cfm[a]	Annual maintenance cost, $	Annual power cost, $	Installed cost, $	Annual operating cost, $
Fabric filter	High efficiency	18,000	1,060	1,140	36,800	2,200
Dry cyclone	Reverse	18,000	320	900	10,360	1,220

[a]Actual flow rates.

Table 4-11. EMISSION CONTROL COSTS FOR BERYLLIUM CERAMIC MANUFACTURING PLANT

Collector	Installed cost, $	Annual operating cost, $
Primary		
Prefilters, bank of 60, 95 percent efficient	16,000	12,000 (change 4 times/yr)
Fabric filters[a]	70,000	11,000
Electrostatic precipitator, 97 percent efficient	95,000	2,000
Secondary		
HEPA filters, bank of 60, 99.97 percent efficient	20,000	11,000 (change 1 time/yr)

[a]Fabric filters can be used as either primary or secondary collectors.

APPENDIX: GAS-CLEANING DEVICES

This appendix briefly discusses applications and operating characteristics of prefilters, fabric filters, and high efficiency particulate air filters (HEPA filters). Where available, specific practices for the control of beryllium emissions are noted.

A.1 PREFILTERS[1]

Prefilters, which are frequently used to protect HEPA filters from high particulate concentrations, are classified as either viscous-impingement panel filters or dry-type, extended-medium filters. The former category is designated as Group I and includes filters with low collection efficiency. The dry-type, extended-medium filters are categorized as either Group II or Group III if their collection efficiencies are, respectively, moderate or high.

Group I filters are constructed of shallow mats of fibrous material coated with an adhesive to prevent reentrainment; the mats are attached to metal or cardboard mounting frames. Figure A-1 illustrates this type of filter installed at the entrance to a dry-type, extended-medium filter. Relatively coarse glass, plastic, wool, or vegetable fibers are frequently employed as filtering media. Group I filters are available in throwaway, replaceable-medium and cleanable-medium types; the filter medium of cleanable filters is usually metal mesh.

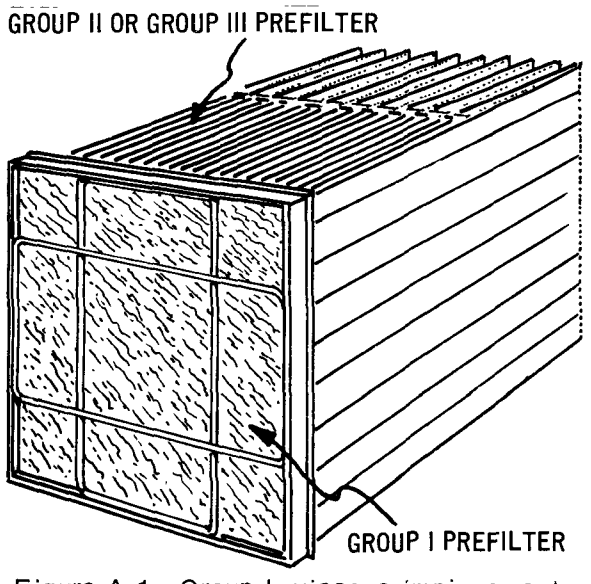

Figure A-1. Group I, viscous-impingement-panel prefilter installed at the entrance to a Group II or Group III prefilter.

The filtering material of Group II and Group III filters is arranged in a folded configuration or formed into bags to maximize the filtering area for a given frontal area of the filter unit (Figure A-2). Filtration is accomplished by finer, more densely packed fibers than those used in Group I filters. Group II and III filters are available in throwaway, replaceable-medium and cleanable-medium types.

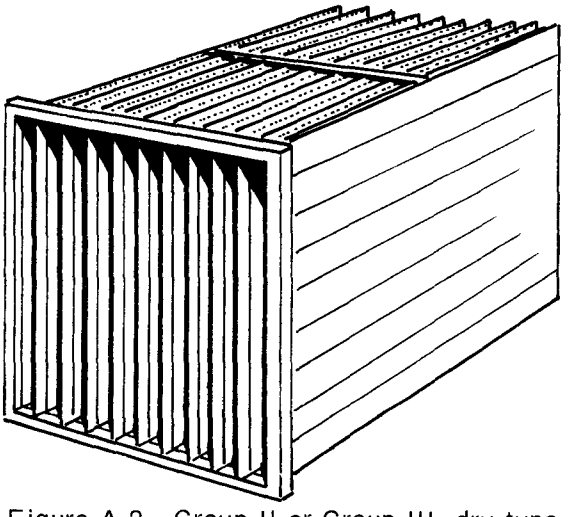

Figure A-2. Group II or Group III, dry-type, extended-medium prefilter.

Table A-1 lists ranges of collection efficiency, measured by the National Bureau of Standards (NBS) Dust-Spot Test Method, for the three groups of prefilters.[1,2] The NBS

Table A-1. EFFICIENCIES OF PREFILTERS[1]

Group	Efficiency	Filter type	Efficiency,[a] %
I	Low	Vicous-impingement, panel-type	5 to 35[b]
II	Moderate	Extended-medium, dry-type	40 to 75[b]
III	High	Extended-medium, dry-type	80 to 98[c]

[a]National Bureau of Standards Dill Dust-Spot Method.[2]

[b]Test using synthetic dust.

[c]Test using atmospheric dust.

test determines the average particulate collection efficiency as dust accumulates on a filter during an accelerated test. Filters with collection efficiencies up to 70 percent are tested with dust from a Cottrell precipitator; higher efficiency filters are tested with atmospheric dust. Efficiencies determined by the NBS test are measures of collection efficiency for small particulates approximately 1 micron or less in effective diameter. A more detailed evaluation of collection efficiencies of prefilters is listed in Table A-2.[1] Nominal air flow capacities, resistances, and dust holding capacities of prefilters are shown in Table A-3.[1] The cited dust-holding capacities are those determined by the NBS test method for Cottrell-precipitator dust. The properties of the dust collected from a particular emission stream can produce a considerably different dust-holding capacity.

Table A-2. FRACTIONAL EFFICIENCIES OF PREFILTERS[1]

Group	Efficiency	Removal efficiency by particle size, %			
		0.3μ	1.0μ	5.0μ	10.0μ
I	Low	0 to 2	10 to 30	40 to 70	90 to 98
II	Moderate	10 to 40	40 to 70	85 to 95	98 to 99
III	High	45 to 85	75 to 99	99 to 99.9	99.9

Table A-3. OPERATING PARAMETERS OF PREFILTERS[1]

Group	Efficiency	Air flow capacity, cfm/ft^2 frontal area	Resistance, in. water		Dust-holding capacity, lb/1000 cfm air flow capacity
			Clean filter	Used filter	
I	Low	300 to 500	0.05 to 0.1	0.3 to 0.4	1 to 3
II	Moderate	250 to 750	0.1 to 0.5	0.2 to 0.5	1 to 5
III	High	250 to 750	0.2 to 0.5	0.6 to 1.4	1 to 5

Group I prefilters operate at a low pressure decrease and can effectively collect high concentrations of larger particulates. These prefilters are not damaged by exposure to high concentrations of soot and smoke, but they are quite susceptible to plugging by fibrous materials. The higher collection efficiencies of Group II and Group III prefilters are accomplished at the expense of higher pressure losses. The geometrical configuration of these filters permits use at duct velocities that are equal to or greater than those for panel filters. Plugging of these two groups of prefilters can occur at high concentrations of soot and smoke, but Group II filters are suitable for filtering streams with high fiber loadings.

Underwriters' Laboratories rates prefilters for fire resistance as either Class 1 or Class 2 filters. Class 1 filters contain no combustible material and emit a negligible quantity of smoke when exposed to flame. Class 2 filters contain some combustible material, but do not contribute significantly to a fire. The use of Class 1 or 2 filters does not eliminate the danger of filter fires, however, because the collected particulate material may be highly combustible.

The maximum continuous operating temperature of most prefilters ranges from 150° to 250° Fahrenheit. However, operating temperatures as high as 400° Fahrenheit can be employed with fiber glass filters housed in metal or mineral-board frames.

A.2 FABRIC FILTERS

Fabric filters have been used commercially for many years and provide one of the most reliable methods for cleaning solid particulate material from gas streams. With this type of filter, a gas stream passes through the woven or felted-fabric filtering medium and deposits entrained particulate material on the upstream or dirty-gas side of the fabric. Subsequently, the gas flows to the downstream or clean-gas side of the filter. The most common geometric configuration of the fabric, illustrated in Figure A-3, is in a group of vertical tubes to form a baghouse; flat areas of fabric are also employed.[3] Dust is periodically or continually dislodged from the surface of the filter either by flexing the fabric or by directing a stream of air against the layer of collected material.

The collecting mechanism of a fabric filter is quite complicated; solid particles much smaller in diameter than the open spaces in clean filtering material can be collected with high efficiencies.[3] The material accumulation on the filter fabric in the form of a cake or mat of particulate matter, most of which is removed during filter cleaning, is an important factor in realizing high collection efficiencies.

A measure of the flow resistance of clean, new filtering material is its ASTM (American Society for Testing and Materials) permeability; this is defined as the volumetric rate of air flow in cubic feet per minute produced by a pressure decrease of 0.5 inch of water across a new, clean filtering fabric, divided by the square feet of the fabric. An important operating parameter of a fabric filtering installation is the gas-to-cloth ratio, or filtering velocity; this is defined as the total volumetric flow rate through the filter, expressed in cubic feet per minute, divided by the square feet of filtering area.[3]

Fabric filters are capable of removing solid particulates from gas streams with a mass efficiency of at least 99.9 percent; this assertion is based upon the operating experience of numerous industries that clean particulate-containing gas streams, the mass fractions of which are composed predominately of particles larger than 1 micron in diameter. Theoretically, the collection efficiency of a clean, relatively open fabric can be quite low for most particles smaller than 2 microns in diameter; a minimum efficiency of less than 20 percent is predicted for particles approximately 0.9 micron in diameter.[4] Laboratory tests have confirmed this decrease in fractional efficiencies for small particles and have indicated that the addition of a filter

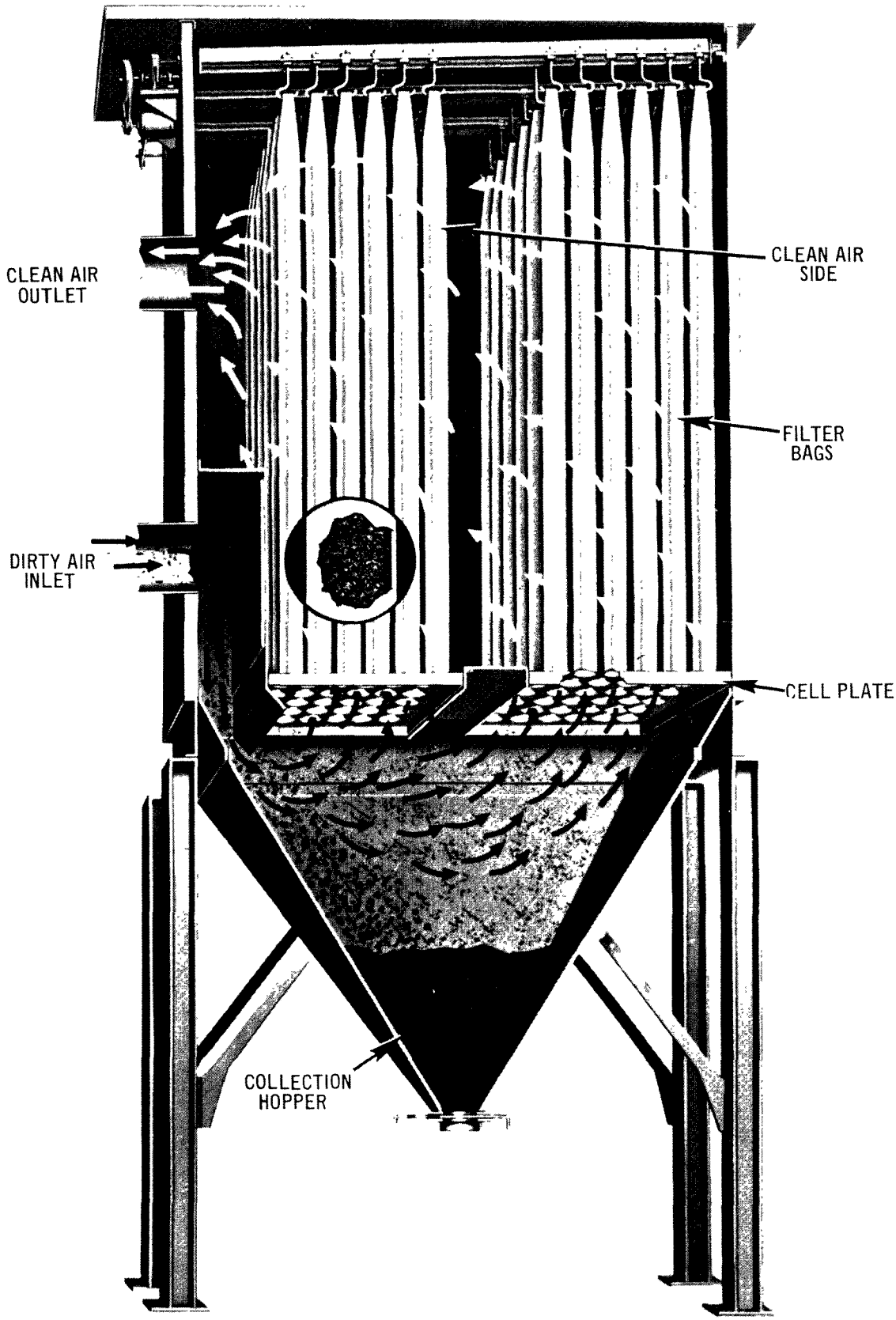

Figure A-3. Sectional view of a baghouse using a fabric filter.[2]

cake can greatly increase collection efficiencies for smaller-sized particles.[5] These same tests reveal a substantial decrease in small-particle fractional efficiencies as a portion of the filter cake is removed by a cleaning process. Fractional efficiencies of operating baghouses for the particles smaller than 2 microns are not available; even data from realistic laboratory tests are sparse.

Some of the different methods of cleaning commercial fabric filters are noted in Section 3.1.5.2.3; methods included are mechanical shaking, reverse gas flow through the filter either with or without appreciable flexing of the fabric, release of a pulse of compressed air against the fabric, use of a reverse flow jet of air that is traversed along the bag axis, and the use of air horns. The type of cleaning device employed can significantly affect the useful lifetime of the filtering fabric; this is primarily a result of differences in the severity of mechanical flexing imposed on the fabric. The method of cleaning can also affect collection efficiency, especially during the start-up period immediately after cleaning. If excessively severe cleaning has removed too much of the residual deposit of collected particulates, the filter operates at unnecessarily low collection efficiencies until a new filter mat is built up. Further, the various cleaning methods do not uniformly clean the surface of a fabric filter. Felted fabrics are cleaned almost exclusively by the pulse jet or reverse jet methods, whereas woven fabrics are usually cleaned by other techniques.

The consideration of specific design parameters such as gas stream temperature, concentration of entrained particulates, size distribution of particulates, and probable ease of releasing particulates from various fabrics facilitates selecting effective combinations of fabric and cleaning methods for controlling emissions. However, the choice of an effective emission control system from among these alternatives can be made with confidence only on the basis of previous successful operating experience with a similar system. If this experience is not available, the determination of an appropriate combination of fabric and cleaning method should be viewed as a development program rather than as an engineering task.

Some examples of specifications and operating parameters for fabric-filter installations now employed as final filters to control beryllium emissions from dry machining operations, wet machining operations, and foundry facilities are listed in Table A-4. Characteristics of fabric filters used by primary beryllium extraction plants are discussed in Section 3.1.5.2.3. These specifications are not intended to be recommendations for designing beryllium emission control equipment because emissions from the cited sources are not completely quantified at present.

A.3 HEPA FILTERS

A HEPA filter is defined by the following specifications:

1. The filter is an extended-medium, dry, throwaway type.
2. The collection efficiency is no less than 99.97 percent for particulates 0.3 micron in diameter.
3. The flow resistance of a clean filter at rated air-flow capacity is no larger than 1.0 inch of water.
4. A rigid housing extends the entire depth of the filtering medium.

The collection efficiency is specified for particulates of 0.3 micron in diameter because it is generally accepted that particles with diameters in the range 0.1 to 0.3 micron are the most difficult ones to collect when filtering a gas stream. Further, the use of a monodispersed, laboratory-generated dioctylphthalate (DOP) aerosol has proven to be a practical and efficient method of checking the efficiency of these filters on a production basis.

The construction features of typical open-faced HEPA filters that are sufficiently strong to be used to clean contaminated

Table A-4. SPECIFICATIONS AND OPERATING PARAMETERS FOR FABRIC FILTER INSTALLATIONS TO CONTROL SECONDARY BERYLLIUM EMISSIONS

Application	Operation	Fabric	Permeability, cfm/ft^2 at 0.5 in. water	Bag length, in.	Bag diameter, in.	Filtering velocity, ft/min	Expected pressure decrease, in. water
Beryllium dry machining	Intermittent	Silicone treated cotton	4 to 4½	48	4 to 6	2 to 5	2 to 6
Beryllium wet machining	Intermittent	–	–	48	3¾	2 to 5	2 to 6
Beryllium foundry operations	Intermittent	Woven Dacron	15 to 25	168	5	1 to 3	2 to 4

exhausts are illustrated in Figure A-4.[1] The filtering medium, which is fiber glass (fire resistant) or cellulose-asbestos (combustible) paper, is wrapped in an S pattern across corrugated metal or ceramic strips, which maintain the appropriate spacing between adjacent faces of the medium. The extreme fragility of the filtering medium requires that filters be carefully handled to avoid damage. Proper installation of filter units into retaining frames and the use of gasket materials of appropriate hardness are critical factors in preventing leakage around filter units.

Dimensions and nominal air-flow capacities of some standard-sized HEPA filters for contaminated exhaust service are shown in Table A-5.[1] Typical limiting continuous-

Table A-5. NOMINAL SPECIFICATIONS OF STANDARD HEPA FILTERS

Capacity at clean-filter resistance of 1.0 in. water, scfm	Filter face dimensions, in.	Filter depth less gaskets, in.
25	8 by 8	3-1/6
50	8 by 8	5-7/8
125	12 by 12	5-7/8
500	24 by 24	5-7/8
1000	24 by 24	11-1/2

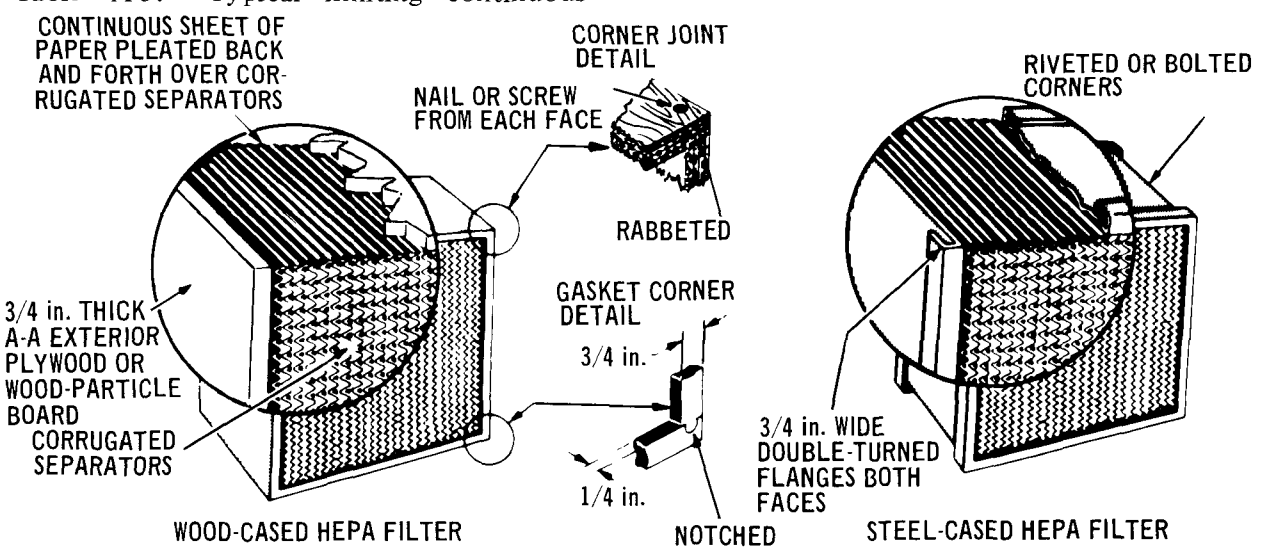

Figure A-4. Construction of open-faced HEPA filters.[1]

service temperatures of fire-resistant steel-framed and wood-framed HEPA filter units are listed in Tables A-6 and A-7, respectively.[1] The American Association for Contamination Control (AACC) Standard for HEPA filters specifies three classifications of fire resistance: fire resistant, semicombustible, and combustible, depending upon the fire resistance of the filter material, filter case, and separators.[1]

The overpressurization of HEPA filters for even short periods of time can seriously damage the filtering medium.

Table A-6. RECOMMENDED LIMITING SERVICE TEMPERATURES FOR STEEL-FRAMED, FIRE-RESISTANT HEPA FILTER UNITS SEALED WITH ELASTOMERIC ADHESIVES[1]

Sealer used	Temperature to which filter was exposed, by exposure time, °F				
	Up to 10 min[a]	Up to 2 hr	Up to 48 hr	Up to 10 days	Indefinitely
HT-30-FR[b]	750	350	325	300	260
Z-743[c]	750	325	300	275	200
EC-2155[d]	750	250	220	200	200
Polyruethane[e]	750	325	300	275	230

[a]Some reduction in efficiency may occur after 5 minutes of exposure.

[b]Goodyear.

[c]Pittsburgh Plate Glass.

[d]Minnesota Mining and Manufacturing (3M).

[e]Proprietary formulation of Flanders Filters, Inc.

Table A-7. RECOMMENDED LIMITING SERVICE TEMPERATURES FOR WOOD-FRAMED, FIRE-RESISTANT HEPA FILTER UNITS[1,a]

Frame material	Temperature to which filter was exposed, by exposure time °F				
	Up to 10 min	Up to 2 hr	Up to 48 hr	Up to 10 days[b]	Indefinitely[b]
¾-in. plywood[c]	750	300	275	200	180
¾-in. wood particle board[c,d]	750	300	250	180	180

[a]Subject to sealant limitations given in Table 5-6.

[b]Maximum temperature of 120°F where relative humidity is 75 percent or higher.

[c]Exterior-grade, fire-retardant treated.

[d]Minimum density = 45 pounds per cubic foot.

Shock overpressure resistance, which is the maximum short-duration overpressure that a filter can sustain with no visible physical damage and no decrease in collection efficiency, of typical open-faced HEPA filters is shown in Table A-8.[1] Overpressures of 0.5 to 1.0 pound per square inch greater than those given in Table A-8 can cause bursting of the downstream pleats of the filter medium. Overpressures of 2 pounds per square inch greater than the shock overpressure resistance can produce large-scale rupturing or even complete blowout of the filter core. The use of 4- by 4-inch face guards significantly increases the overpressure shock resistance and protects the filter from damage during handling and installation.

The primary function of a HEPA filter is the removal of submicron particulates from a gas stream that has a relatively low concentration of particulate contamination. Gas streams heavily loaded with particulates can rapidly plug HEPA filters; particles with fiber or flake form are capable of inducing particularly rapid clogging. The nominal dust-holding capacity of HEPA filters, which varies with the type of particles collected, is approximately 4 pounds per 1000 cubic feet per minute of rated gas-flow capacity.[1] Prefilters are recommended to protect HEPA filters against rapid plugging when the particulate loading of a stream is greater than 50 micrograms per cubic meter; this practice may be advantageous even when the inlet concentration is as small as 5 micrograms per cubic meter.[1] Figure A-5 illustrates the extent to which the service life of a HEPA filter can be increased by the use of a prefilter.[1]

Table A-8. SHOCK OVERPRESSURE RESISTANCE OF OPEN-FACE HEPA FILTERS

Filter dimensions, in.		Overpressure, psig		
			Recommended design limit[b]	
Face	Depth	Test value[a]	With face guards	Without face guards
8 by 8	3-1/16	3.6	3.1	2.0
8 by 8	5-7/8	4.5	3.8	2.5
12 by 12	5-7/8	3.6	3.1	2.0
24 by 24	5-7/8	2.2	1.9	1.2
24 by 24	11-1/2	3.2	2.7	1.8

[a]Clean filter with 4- by 4-inch face guards on both faces.

[b]Dirty filters.

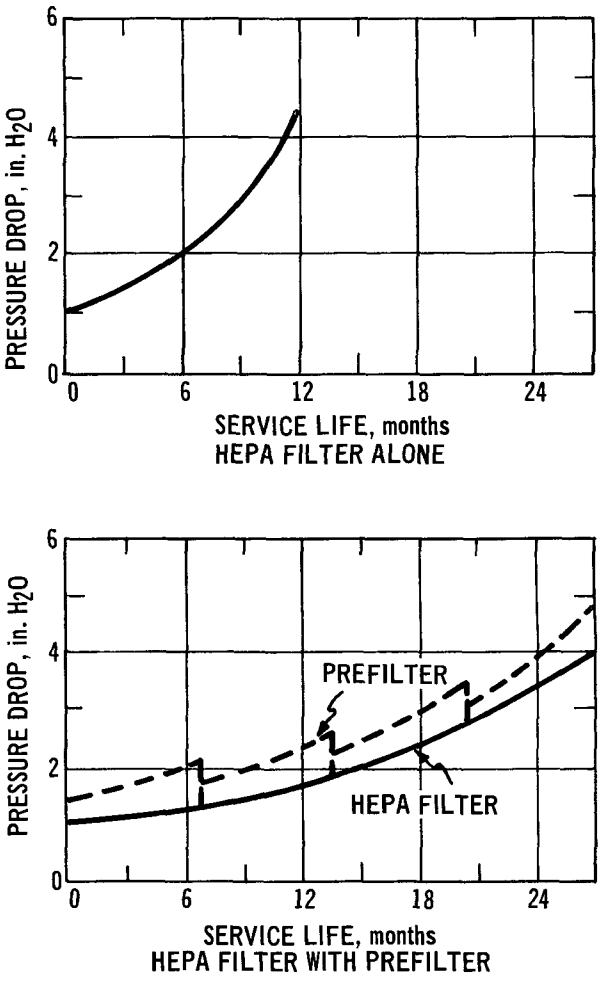

HEPA FILTER REPLACED AT 4 in. H_2O PRESSURE DROP, AND PREFILTER REPLACED WHEN PRESSURE DROP ACROSS IT REACHES 2 TIMES THE CLEAN-FILTER PRESSURE DROP.

Figure A-5. Influence of prefilter on service life of HEPA filter.

Recommended practices frequently specify that HEPA filters be changed when the filter resistance reaches 2 inches of water; this means that power losses do not become excessive and that ventilation fans can be sized for relatively low delivery pressures. However, HEPA filters are routinely capable of sustaining pressure decreases of up to 10 inches of water in the absence of physical damage to the filter medium and any decrease in collection efficiency. Accordingly, if higher filter resistance can be accommodated in a particular installation, the service life of HEPA filters can be substantially increased; Figure A-6 presents a typical example of this practice.[1]

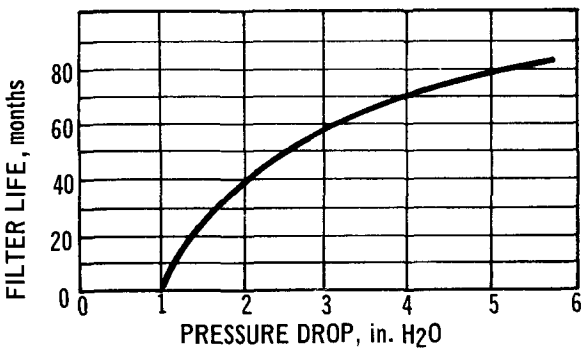

Figure A-6. Effect of increased filter resistance on service life of HEPA filter.[1]

A.4 REFERENCES FOR APPENDIX

1. Burchsted, C. A. and A. B. Fuller. Design, Construction, and Testing of High-Efficiency Air Filtration Systems for Nuclear Application. Oak Ridge National Laboratory. Oak Ridge, Tenn. ORNL-NSIC-65, UC-80-Reactor Technology. January 1970. p. 2.2, 2.3, 3.1-3.9.

2. Dill, R. S. A Test Method for Air Filters. National Bureau of Standards. Washington, D. C. 1938.

3. Control Techniques for Particulate Air Pollutants. U. S. Department of Health, Education, and Welfare, National Air Pollution Control Administration. Washington, D. C. NAPCA Publication No. AP-51. January 1969. p. 103-105.

4. Stairmand, C. J. Design and Performance of Modern Gas Cleaning Equipment. J. Inst. Fuels (London). *29*:58-81, 1956.

5. Whitby, K. T. and D. A. Lundgren. Fractional Efficiency Characteristics of a Torit Unit-Type Cloth Collector. Torit Manufacturing Co. August 1961.

SUBJECT INDEX

A

Alloy
  beryllium, 2-1, 3-8, 3-9, 4-7
  beryllium-copper, 3-1, 3-6 – 3-9, 3-18, 4-4

B

Baghouse, A-4
Bertrandite ore, 3-3, 3-5
Beryl ore, 2-3, 2-4, 3-3, 3-4
Beryllium
  chemical properties, 2-2, 2-3
  combustion, 3-20
  definition, 2-1
  emissions (see Emissions)
  machine shops, 3-22
  minerals, 2-3
  ore, 2-1, 3-1
  physical properties, 2-1, 2-2
  uses, 2-3
Beryllium alloy
  definition, 2-1
  physical properties, 2-2
Beryllium ceramics (see Ceramics)
Beryllium-copper alloy
  machine shops, 3-18 – 3-21
  production, 3-1, 3-8
Beryllium-copper foundries (see Foundries)
Beryllium extraction plants (see Extraction plants)
Beryllium hydroxide, 3-6 – 3-10, 3-11
Beryllium oxide
  emissions, 3-23
  machine shops, 3-18, 3-19, 3-22
  production, 3-10, 3-11, 3-24
  properties, 2-2, 2-3
  uses, 3-8
Beryllium production plants
  control equipment, 3-14, 3-16, 3-17
Beryllium propellants (see Propellants)
Beryllium recovery, 3-29
Beryllium rocket motors (see Rocket motors)

C

Ceramics
  control costs, 4-4
  control techniques, 3-24, 3-25
  emissions, 3-23
  manufacture, 3-10, 3-11, 3-22, 3-23
  plant, 2-1
Control costs
  beryllium production, 4-2, 4-3, 4-6
  ceramic manufacture, 4-4 – 4-6
  extraction plants, 4-1 – 4-8
  foundries, 4-4
  machine shops, 4-2, 4-3, 4-7
  propellant manufacture, 4-6
Control equipment
  costs, 4-1 – 4-9
  cyclones, 3-13, 3-15, 3-20, 4-4, 4-5, 4-7
  fabric filters, 3-13, 3-15 – 3-17, 3-19, 4-4, 4-5, 4-7, A-3 – A-6
  HEPA (high efficiency particulate air) filters, 3-13, 3-15, 3-19, 3-20, 3-24, 3-28, 3-29 4-5, A-5 – A-9
  mechanical collectors, 3-13, 3-15, 3-19
  prefilters, 3-13, 3-14, 3-24, A-1 – A-3
  scrubbers, 3-13, 3-14, 3-16, 3-27, 3-28

D

Dust (see Emissions, ceramics manufacture and machine shops)

E

Emissions
  beryllium extraction plants, 3-10
  ceramics manufacture, 3-23, 3-24, 4-9
  foundries, 3-21
  machine shops, 3-18
  major sources of, 2-4
  propellants, 3-26
  waste disposal, 3-27, 3-28
Extraction plants
  control costs, 4-1 – 4-8
  control equipment, 3-10 – 3-12
  control techniques, 3-10 – 3-12
  definition, 2-1
  emissions, 3-12
  process descriptions, 3-1 – 3-10

F

Fabric filters (see Control equipment)
Finished forms, 3-6, 3-8, 4-7
Foundries
  control costs, 4-4, 4-9
  control techniques, 3-22
  definition, 2-1
  emissions, 3-21
  operations, 3-21
Fume, 2-1, 3-22, 3-24

G

Gas-cleaning devices, 3-27 – 3-29, A-1 – A-9

H

HEPA filters (see Control equipment)

M

Machine shops
  control costs, 4-9
  control techniques, 3-18, 3-19, 3-21
  definition, 2-1
  emissions, 3-18
  processes, 3-18
Mechanical collectors (see Control equipment)
Metal billets, 3-6 – 3-9, 4-5 – 4-7
Mist, 2-1, 3-24

O

Open burning, 2-4

P

Prefilters (see Control equipment)
Propellants
  control costs, 4-6
  control techniques, 3-26
  definition, 2-1
  disposal (see Waste disposal)
  emissions, 3-26
  manufacture, 3-24, 3-25

R

Rocket motors
  beryllium propellants, 3-25, 3-26
  static firing
    control costs, 4-6
    control techniques, 3-26, 3-27
    emissions, 3-26, 3-27
  test sites, 2-1

S

Scrubbers (see Control equipment)

W

Waste disposal
  beryllium propellants, 3-27 – 3-29
  beryllium-containing wastes, 3-28

☆ U. S. GOVERNMENT PRINTING OFFICE: 1973— 746768/4127

ENVIRONMENTAL PROTECTION AGENCY
Technical Publications Branch