EPA/910/9-92/027

EPA 910/9-92-027

United States
Environmental Protection
Agency

Region 10
1200 Sixth Avenue
Seattle WA 98101

Alaska
Idaho
Oregon
Washington

Management Division

Policy Planning & Evaluation Branch

August 1992

EPA

Pollution Prevention Opportunity Assessment and Implementation Plan

For Simpson Tacoma Kraft Company, Tacoma, Washington

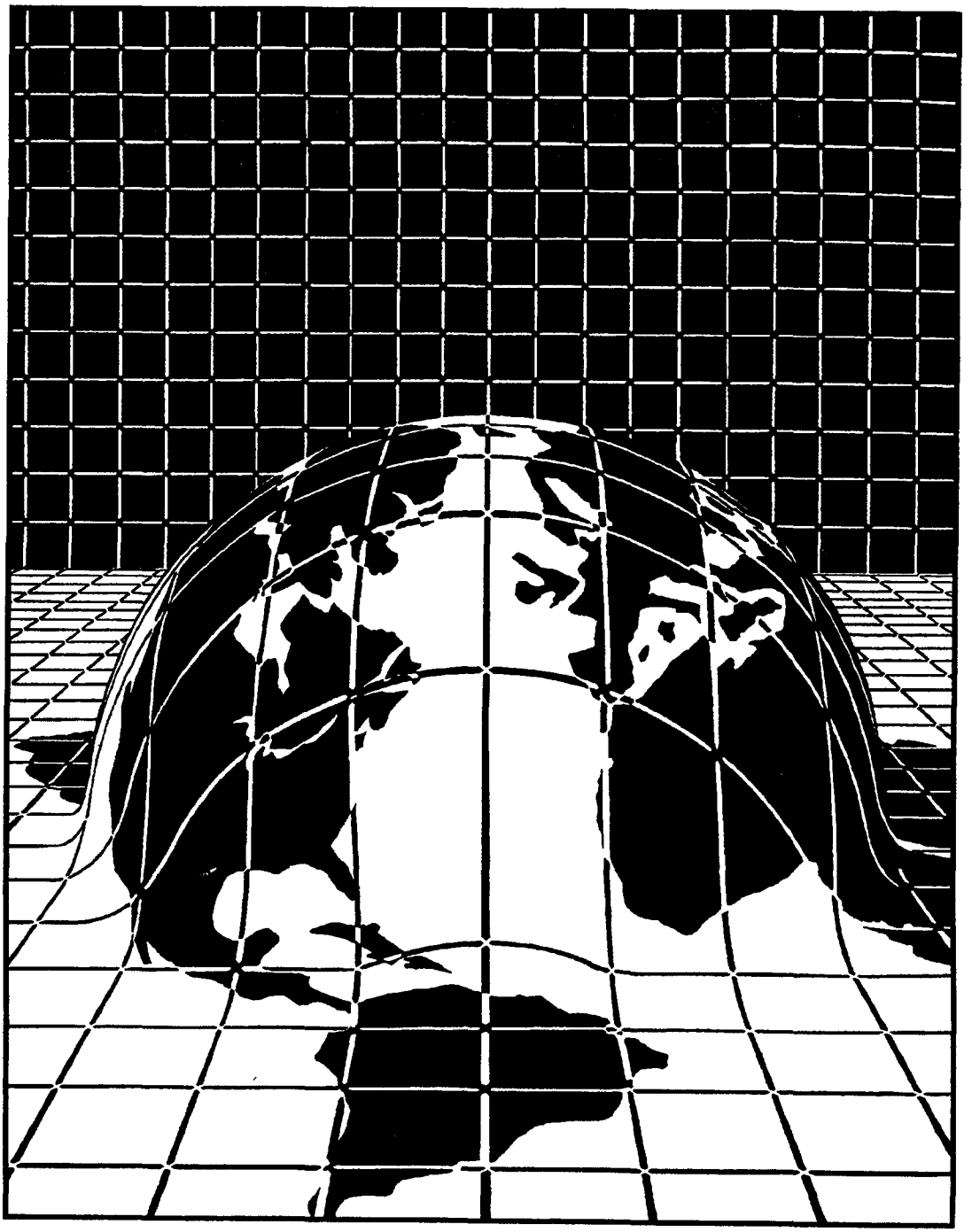

POLLUTION PREVENTION OPPORTUNITY ASSESSMENT AND IMPLEMENTATION PLAN

FOR

SIMPSON TACOMA KRAFT COMPANY
TACOMA, WASHINGTON

August 1992

Prepared for

U.S. EPA Region 10
1200 Sixth Avenue
Seattle, Washington

EPA Contract No. 68-C8-0062
Work Assignment No. 3-63
SAIC Project No. 01-0832-03-1013

Science Applications International Corporation
606 Columbia Street NW, Suite 300
Olympia, Washington 98501

Amendola Engineering, Inc.
Lakewood, Ohio

NOTE

This report has been prepared by SAIC for EPA Region 10, with participation by staff of EPA Region 10, Simpson, and the Washington Department of Ecology (Ecology). The recommendations contained in this report are the result of SAIC's analysis of the Simpson mill and do not necessarily imply approval by the regulatory agencies. Relative priority rankings of the various options were developed on the basis of discussions among Simpson, EPA, and Ecology, and were coordinated to the extent possible with Simpson's established business plans and current considerations for possible long range mill reconfiguration. Due to the voluntary nature of Simpson's participation in this project and in implementing the recommended pollution prevention options, these priorities for implementation do not necessarily represent those that would be chosen by EPA or Ecology. Furthermore, these priorities could change in the future based on new information or changes in environmental regulations.

Most of the installed cost data and cost estimates included in this report were obtained from Simpson. Many of the cost estimates are order-of-magnitude type estimates and were not based upon preliminary engineering studies. Though these estimates were not specifically verified in detail by SAIC, EPA, or Ecology, they were qualified as reasonably appropriate and approximately commensurate with similar projects at other facilities in most cases. However, caution should be exercised in the direct application of these estimates to other facilities due to broad differences in mill configurations, equipment types, and specific engineering requirements from one facility to another.

Table of Contents

Page

EXECUTIVE SUMMARY iv

1.0 PROJECT OVERVIEW 1
1.1 PURPOSE 1
1.2 PURPOSE AND BENEFITS OF POLLUTION PREVENTION 1
1.3 PROCEDURES 2
1.4 ORGANIZATION OF THE REPORT 5

2.0 FACILITY DESCRIPTION 6
2.1 MILL OVERVIEW 6
2.2 MAJOR PROCESSES AND ASSESSMENT METHODOLOGY 6
2.3 MILL EMISSIONS AND DISCHARGES 9

3.0 POLLUTION PREVENTION OPPORTUNITY ASSESSMENT RESULTS 12
3.1 WOODYARD - CHIP HANDLING AND STORAGE 12
3.1.1 Fugitive Dusts 12
3.1.2 VOCs from Chips in Inventory 12
3.1.3 Stormwater Runoff 13
3.2 CHIP PREPARATION 13
3.2.1 Chip Screening 13
3.2.2 Wood Waste 14
3.3 PULPING, CHEMICAL RECOVERY AND POWER GENERATION 14
3.3.1 Digesters, Brownstock Washers, Black Liquor Storage, and Evaporators 15
3.3.2 Recovery Boilers 21
3.3.3 Recausticizing and Lime Kilns 23
3.3.4 Power Boiler 23
3.3.5 Digester and Evaporator Condensates 24
3.3.6 Black Liquor Spill Prevention and Control 25
3.3.7 Pulping Process Modifications 26
3.4 BLEACHING 27
3.4.1 Chloroform Reduction 29
3.4.2 Oxygen Delignification 29
3.4.3 Other Chlorinated Compounds 31
3.5 PULP DRYERS AND PAPER MACHINES 33
3.5.1 No. 13 Paper Machine and Pulp Dryer Save-Alls 33
3.5.2 Improved Steam Condensate Recovery and Water Conservation/Reuse 33
3.6 WASTEWATER TREATMENT 34
3.6.1 Volatile Pollutants 34

3.6.2 Wastewater Treatment Sludges 36
3.6.3 Wastewater Effluent 36
3.7 MILL-WIDE OPERATIONS 37
3.7.1 General Operations 37
3.7.2 Water Conservation 37

4.0 EVALUATION OF ALTERNATIVES 38
4.1 COMPLETED POLLUTION PREVENTION PROJECTS 38
4.2 ADDITIONAL POLLUTION PREVENTION RECOMMENDATIONS 38

5.0 RECOMMENDED IMPLEMENTATION PLAN 45
5.1 RECOMMENDED FRAMEWORK FOR ESTABLISHING A POLLUTION PREVENTION PROGRAM 45
5.1.1 Management Commitment 45
5.1.2 Pollution Prevention Committee 46
5.1.3 Incentives and Barriers to Pollution Prevention 47
5.1.4 Environmental Forward Planning Process 48
5.2 RECOMMENDED IMPLEMENTATION SCHEDULES 49

6.0 REFERENCES 54

Appendices

APPENDIX A: SAMPLE OUTLINE FOR ENVIRONMENTAL AND POLLUTION PREVENTION PLANNING

APPENDIX B: GLOSSARY

APPENDIX C: SIMPSON MILL TRIALS, CHLORINE DIOXIDE SUBSTITUTION

List of Figures

1 POLLUTION PREVENTION TECHNIQUES 3

2 THE POLLUTION PREVENTION ASSESSMENT PROCEDURE 4

3 WOOD PREPARATION AND DIGESTION PROCESSES 16

4 PULP WASHING 17

5 NO. 4 WASHER 18

6 CHEMICAL RECOVERY 19

7 TURPENTINE RECOVERY 20

8 BLEACHING SEQUENCE 28

9 CHLOROFORM GENERATION VS CHLORINE DIOXIDE SUBSTITUTION 30

10 WASTEWATER TREATMENT 35

List of Tables

1 PROCESS EQUIPMENT AND PRODUCTION PROFILE 7

2 SARA SECTION 313 TOXIC CHEMICAL RELEASE INVENTORY 11

3 POINT SOURCE TRS EMISSIONS NOT CONNECTED TO NON-CONDENSIBLE GAS SYSTEM 11

4 COMPLETED PROCESS IMPROVEMENTS AND POLLUTION PREVENTION PROJECTS 39

5 ADDITIONAL POLLUTION PREVENTION RECOMMENDATIONS 41

6 PROPOSED IMPLEMENTATION SCHEDULE FOR SHORT-TERM POLLUTION PREVENTION RECOMMENDATIONS 51

7 PROPOSED IMPLEMENTATION SCHEDULE FOR LONG-TERM POLLUTION PREVENTION RECOMMENDATIONS 53

EXECUTIVE SUMMARY

The Environmental Protection Agency (EPA) is actively pursuing and encouraging development of pollution prevention programs in U.S. industries. Using funds provided from EPA's Industrial Pollution Prevention Project, EPA Region 10 was tasked with the development of a model pollution prevention plan for the pulp and paper industry, one of the largest industries in the Region. As a part of that project, a specific pollution prevention opportunity assessment and voluntary implementation plan was developed for the Simpson Tacoma Kraft Mill in Tacoma, Washington. This report documents the results of that effort.

SAIC conducted the opportunity assessment and developed the implementation plan for Simpson Tacoma. Representatives of Simpson, EPA, and the Washington Department of Ecology participated in the mill observations and discussions that helped shape this document. By reviewing the major process areas and equipment within the Simpson Mill, interviewing plant personnel, noting recent equipment upgrades, and evaluating emission and discharge estimates from the Toxics Release Inventory (TRI) data, feasible process alternatives were identified and evaluated for potential implementation at Simpson.

SAIC developed a number of recommendations for Simpson Tacoma to develop an ongoing pollution prevention program, and recommendations for implementation of short-term and long-term process modifications to attain pollution prevention benefits. The high priority near term options, for implementation within 1 to 5 years include:

- Fugitive dust control for chip piles
- Indirect heat exchangers on batch digesters
- Utilization of boiler ashes and slaker grits
- Expansion of the non-condensible gas system
- Black liquor spill prevention and recovery
- Improved water conservation and reuse for the paper machines and pulp dryers
- Increased bulk and semi-bulk purchases to eliminate drums
- Minimization of miscellaneous hazardous wastes
- Improved water conservation and reuse throughout mill.

The long-term options that could be considered for implementation within 5 to 10 years include:

- Expansion of mill capacity with addition of secondary fiber
- Replacement of existing batch digester kraft capacity with addition of secondary fiber
- Replacement of No. 2 and No. 3 brownstock washers
- Upgrading or replacing No. 3 recovery boiler
- New MCC digester for bleached stock
- Addition of oxygen delignification
- Operation of bleach plant at 100% chlorine dioxide substitution
- Installation of chip thickness screens
- Steam stripping of foul condensates or incineration in power boiler.

It is EPA's desire that this opportunity assessment and implementation plan be used by other mills as an example for developing their own pollution prevention programs. Additional references that may be useful for this task are listed in Section 6.0.

1.0 PROJECT OVERVIEW

1.1 PURPOSE

In accordance with the Pollution Prevention Act of 1990, EPA is actively pursuing and encouraging development of pollution prevention programs in U.S. industries. The pulp and paper industry comprises one of the largest industries within Region 10. The pulp and paper industry was selected for this study because of its involvement in several major environmental programs administered by EPA. This effort is viewed as an opportunity for Federal and state governments to work in a partnership with industry to develop a plan that will benefit both industry and the environment. This effort is being funded and conducted as a pilot project under EPA's Industrial Pollution Prevention Project (IP3), one of EPA's "2% set-aside" pollution prevention initiatives.

The purpose of this project is to provide EPA with a model pollution prevention plan for the pulp and paper industry, focused specifically on the bleached kraft segment. To develop such a plan that is both practical and specific, SAIC was asked by EPA and Simpson Tacoma Kraft Company (Simpson) to perform a pollution prevention opportunity assessment and develop a specific voluntary pollution prevention implementation plan for the Simpson facility, located in Tacoma, Washington. This report presents the results of that opportunity assessment and lays out a plan for Simpson to implement selected pollution prevention alternatives over a short (1 - 5 years) and long-term (5 - 10 years) planning horizon.

1.2 PURPOSE AND BENEFITS OF POLLUTION PREVENTION

The ultimate goal of pollution prevention is to reduce present and future threats to human health and the environment. In the IP3, "pollution prevention" is defined as "the use of processes, practices, or products that reduce or eliminate the generation of pollutants." This means that pollution prevention is to be thought of as the elimination of the sources of pollution through one or more of the following:

- Product reformulation
- Process modification
- Improved housekeeping and management practices.

Where elimination of the source of pollution is not possible, some form of recycling, i.e., in-house, closed-system measures which return (potential) pollutants for reuse within a production process, may be pollution prevention. It is important to note that pollution prevention considers the environment as a whole. Eliminating waste discharge to one medium by simply transferring the pollutants to another medium is not pollution prevention.

Pollution prevention methods can be grouped into two main categories: source reduction and recycling. Source reduction is any activity that reduces or eliminates the generation of waste at the source. One example of source reduction is the substitution of chlorine dioxide for chlorine in pulp bleaching operations, and control of the application of those chemicals. This practice has resulted in significant reductions in the amounts of chlorinated compounds, including dioxins, in the product and in process effluents. Recycling includes the reuse or reclamation of used materials. Within the pulp mill, for example, process chemicals contained in the black liquor are recovered and reused in the pulping process, and lignin solids are burned for energy recovery.

There are many ways that source reduction can be implemented, including process changes, raw material substitution, waste stream segregation, material handling improvements, and loss prevention procedures. Furthermore, there are many ways that materials can be reused or reclaimed, either within the manufacturing process or externally through commercial markets. Figure 1 depicts the categories of pollution prevention techniques. EPA recommends the exploration of source reduction options first, to minimize the generation of waste, and recycling options second, to maximize the reuse of materials.

In this report, particular emphasis has been given to source reduction alternatives for the waste streams selected. A number of process optimization options were evaluated for their potential to reduce pollution and their economic and technical feasibility within the Simpson mill.

Implementation of the options discussed in this report will provide both direct and indirect benefits. Direct savings in disposal and procurement costs may result. However, indirect benefits may be equally or more significant. One indirect benefit of pollution prevention is reduction in liability. Generation of less hazardous waste to be disposed of translates to a smaller legal burden for the "cradle to grave" management of hazardous waste both onsite and offsite. Less hazardous waste also means less effort in manifesting and recordkeeping. Reduction in toxicity of materials or wastes and in quantity of wastes generated can decrease potential occupational hazards.

Finally, a pollution prevention program, coupled with public and employee education, can generate good will in the community, enhance a facility's public image, and foster a higher level of concern for the environment in individuals.

1.3 PROCEDURES

In general, this task followed the EPA procedures outlined in the Waste Minimization Opportunity Assessment Manual (EPA/625/7-88-003): (1) planning and organization, (2) assessment, (3) feasibility analysis, and (4) implementation (Figure 2). The project was initiated in January 1992 with a meeting at Simpson to discuss the objectives and schedule for the project and to facilitate the exchange of information during the assessment phase.

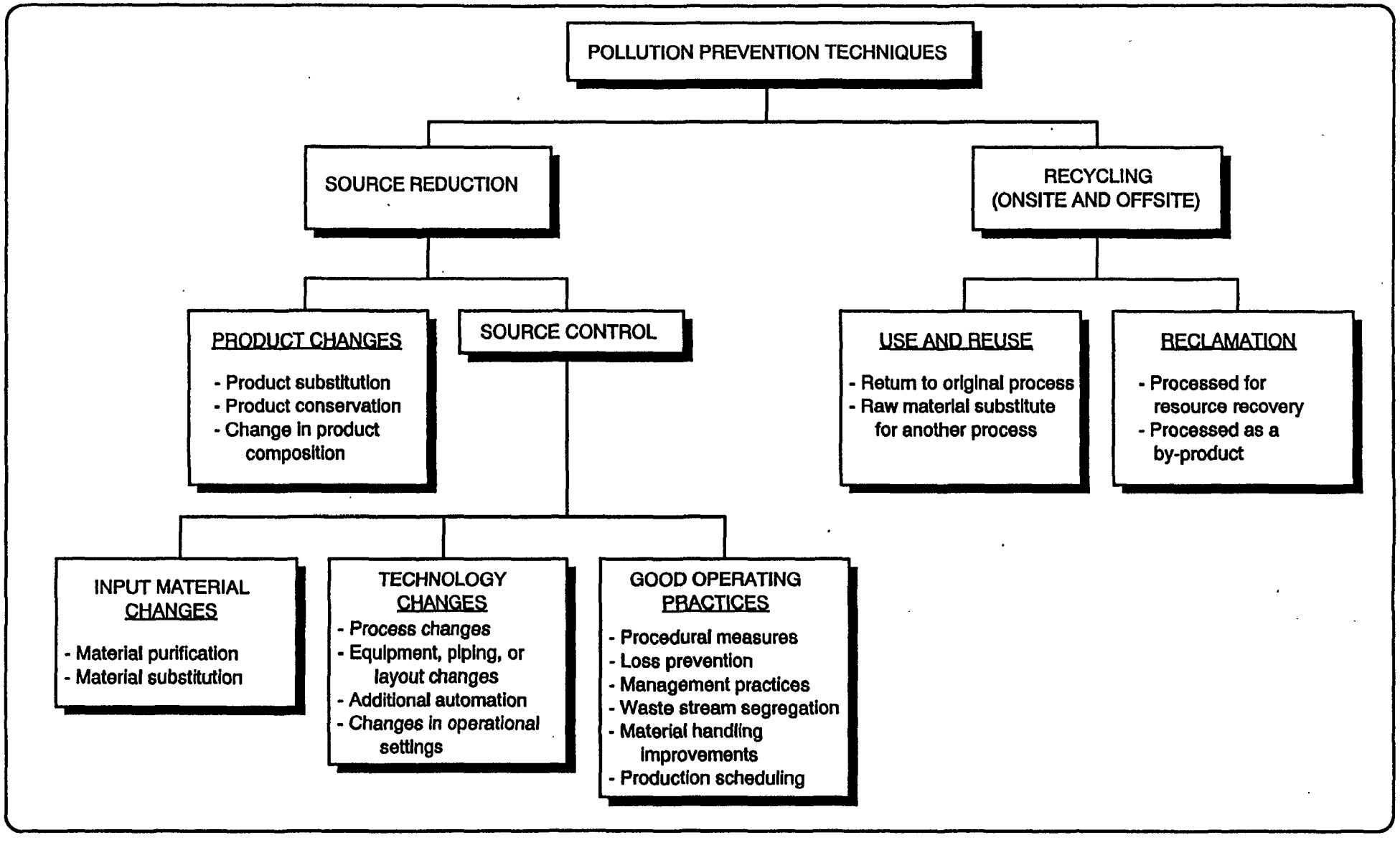

Figure 1

POLLUTION PREVENTION TECHNIQUES
(Adapted from EPA/625/7-88-003)

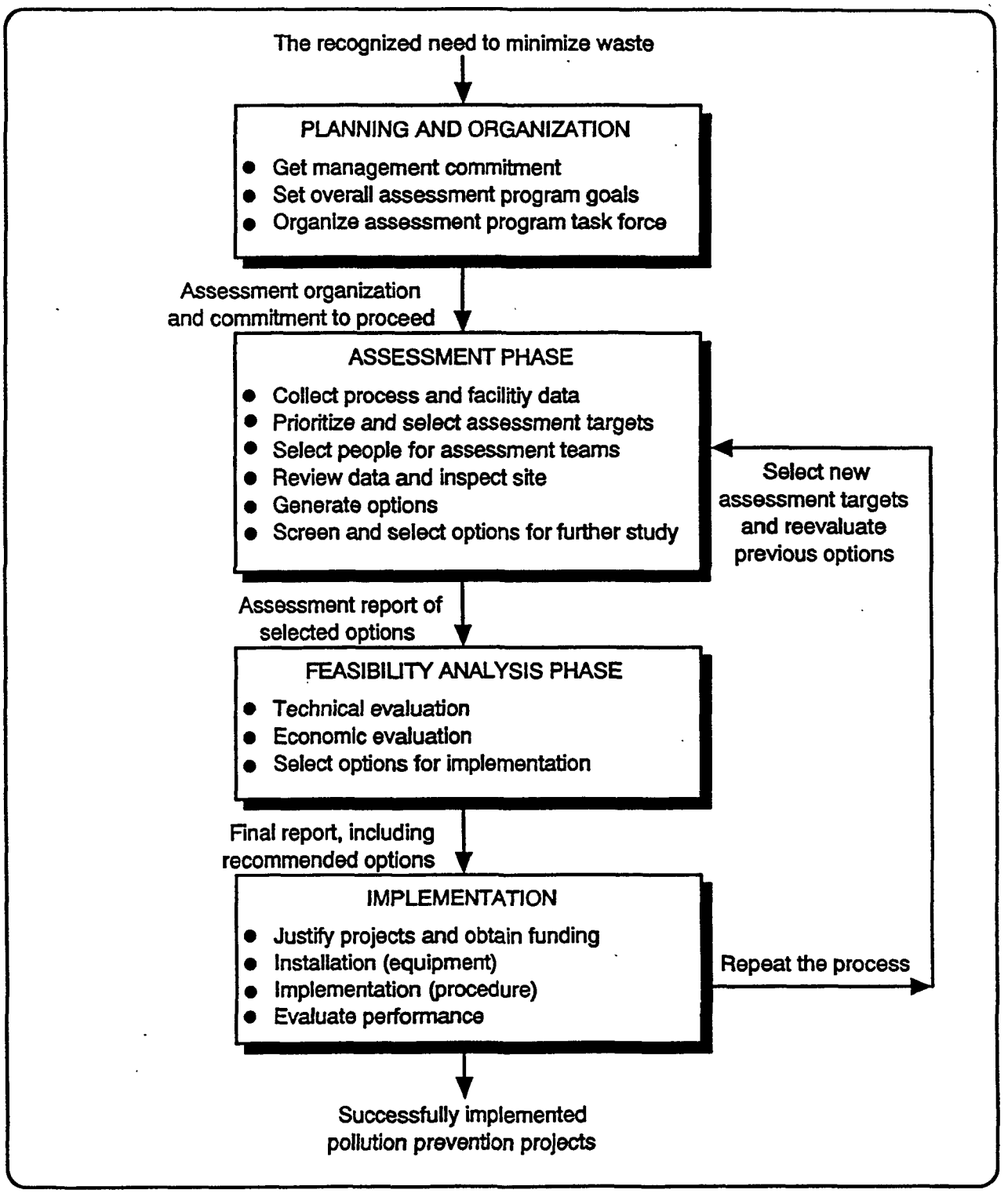

Figure 2

THE POLLUTION PREVENTION ASSESSMENT PROCEDURE
(Adapted from EPA/625/7-88-003)

The audit team was comprised of SAIC staff and a technical consultant to SAIC. The team performed the onsite portion of the opportunity assessment in two phases, with a three day plant visit in January, and a second three day plant visit in February 1992. The team became familiar with operations at Simpson, collected process information, gathered emissions and flow data, interviewed plant personnel, identified waste management procedures, and gathered information concerning waste generation, disposal methods and costs, and previously implemented process improvements and pollution prevention projects.

The entire mill was evaluated, and, on the basis of the onsite visits and review of available information, the pulping, chemical recovery, and bleaching processes were selected to be the focus of analysis. These processes were selected on the basis of the quantity of waste they generated, the potential for waste and emission reductions, and their significance to the overall production process. Options for waste reduction in each of the selected processes were identified and evaluated for their potential applicability at Simpson Tacoma. The alternatives were prioritized according to potential pollution reduction benefits, relative cost, and feasibility. Additional technological and financial review is necessary by Simpson to establish final priorities based upon business plans for the mill, regulatory program requirements and its community involvement program.

Based on this prioritization, a proposed voluntary implementation plan was developed to phase in the process changes selected to achieve pollution prevention benefits at Simpson Tacoma. This plan can serve as the framework for incorporating pollution prevention goals into facility improvement planning. Short-term (1 - 5 years) and long-term (5 - 10 years) milestones are presented, indicating possible priorities and sequences for the tasks described. It is anticipated that Simpson will develop detailed plans and schedules and refine cost and environmental benefits estimates, as part of its annual and five-year capital appropriations processes.

1.4 ORGANIZATION OF THE REPORT

Chapter 2 presents a brief overview of the Simpson Tacoma Kraft Company mill, its major processes, the methodology followed in this investigation, and a description of emissions, discharges, and wastes generated by the mill. For each of the processes identified in Chapter 2, Chapter 3 provides a description of operations, waste generation, and proposed pollution prevention alternatives. In Chapter 4, projects already completed by Simpson that provide pollution prevention benefits are summarized, and the additional proposed pollution prevention options are evaluated. Each alternative is ranked in terms of pollution prevention benefits, where quantifiable, and associated costs. Priority values developed from discussions and review with Simpson are presented. A proposed implementation plan comprises Chapter 5, addressing the options discussed in the previous chapter,and proposing a framework for incorporating pollution prevention initiatives into the plant and corporate planning process. Chapter 6 provides a list of references used in the preparation of this report. Appendix A is an outline for an environmental forward plan, and Appendix B is a glossary of pulp and paper industry terms.

2.0 FACILITY DESCRIPTION

2.1 MILL OVERVIEW

The Simpson Tacoma Kraft Company operates a kraft pulp and paper mill producing natural and market bleached pulp, kraft paper and bleached kraft paper used primarily for white and white-top linerboard, natural bags, sacks, and similar food and industrial grade packaging products. Currently, the fiber supply comprises principally Douglas fir, alder and western hemlock chips purchased from captive lumber yards and sawmills and on the open market. The production capacity is about 1,200 air-dried tons per day of pulp and paper products. Depending upon market conditions, about one-third of the pulp produced is bleached. Table 1 is a list of the major production units at the mill, and the age, manufacturer, production capacity and 1989 production rate for the major units (Ref. 1). Simpson has recently installed a 45 ton/day hydropulper for processing recycled newspapers (ONP, old news print) and double-lined kraft cuttings (DLK) for market development of mixed virgin fiber/secondary fiber products. The hydropulper has a capacity of 100 tons/day.

Wood chips are received by barge, rail and truck, stored in the chip yard, and screened prior to pulping in two Kamyr continuous digesters and six batch digesters. Typical operating practice is to bleach the pulp produced in the batch digesters, although pulp produced in the continuous digesters can be cooked to a degree suitable for bleaching to meet bleach plant production demands. Unbleached kraft pulp is dried and baled for export markets, manufactured into kraft paper for sale, or processed onsite into brown or white-top linerboard. Bleached pulp is dried for export markets or manufactured into paper or processed with unbleached kraft pulp used as the base sheet in white-top linerboard. The mill is equipped with conventional kraft chemical recovery systems, a power boiler and an end-of-pipe primary and secondary (UNOX^{R}-activated sludge) wastewater treatment facility. Process water is purchased from the City of Tacoma.

2.2 MAJOR PROCESSES AND ASSESSMENT METHODOLOGY

For purposes of the opportunity assessment, the mill has been divided into the following major process areas:

Woodyard - Chip Handling and Storage
Chip Preparation - Screening
Pulping, Chemical Recovery and Power Generation
Pulp Bleaching
Pulp Dryers and Paper Machines
Wastewater Treatment
General Mill Operations

Table 1

PROCESS EQUIPMENT AND PRODUCTION PROFILE
SIMPSON TACOMA KRAFT COMPANY

PROCESS EQUIPMENT	MFR	QTY	YEAR INSTALLED	PRODUCTION CAPACITY	1989 PRODUCTION	PRODUCTION UNITS
PULPING - KRAFT						
Batch Digesters		6	1940-1950	442	293	ADBS t/d
#1 Continuous	Kamyr	1	1961	576	485	ADBS t/d
#2 Continuous	Kamyr	1	1962	438	360	ABDS t/d
BROWNSTOCK PULP WASHING						
Line #1	IMPCO	3 stages	Unknown	300*	294	ADBS t/d
Line #2	IMPCO	3 stages	1961	500*	485	ABDS t/d
Line #3	IMPCO	3 stages	Unknown	400*	360	ABDS t/d
Line #4	Black Clawson	7 stages	1991	600	NA	ABDS t/d
EVAPORATORS						
#1	Swenson	6 effects	1950	Not Available	1,380,000	# liq sol/d
#2	Swenson	7 effects	1961	Not Available	1,200,000	# liq sol/d
#4	Unitech	6 effects	1973	Not Available	2,520,000	#liq sol/d
CHEMICAL RECOVERY FURNACES						
#3	Combustion Engineering	1	1961	140 gpm	1,390,000	# liq sol/d
#4	Combustion Engineering	1	1973	300 gpm	2,520,000	# liq sol/d

* estimated

Table 1

PROCESS EQUIPMENT AND PRODUCTION PROFILE
SIMPSON TACOMA KRAFT COMPANY

LIME KILNS						
#1	Allis Chalmer	1	1961	1,500	1,233	ADT/day
#2	Fuller	1	1973	300	225	ADT/day
BLEACH PLANT						
#1	Beloit	1	1989	550	364	ADT/day
CHLORINE DIOXIDE GENERATION						
#1 (R-8)	Kemanord	1	1989	12	7.7	tons ClO_2/day
MARKET PULP DRYERS						
#1	Flakt	1	1937	348	207	ADT/day
#2	Flakt	1	1937			
PAPER MACHINES						
#13	Pusey Jones	1	1948	359	212	ADT/day
#14	Beloit	1	1961	977	625	ADT/day

For each process area identified above, waste generation, process improvements, and pollution prevention projects and practices previously implemented by Simpson were identified. Additional pollution prevention alternatives were identified and these were evaluated for technical feasibility on a preliminary basis. Where it appeared that alternatives were technically feasible, estimates of possible emission reductions were made and order-of-magnitude cost estimates were developed. The alternatives for each production area were ranked on a qualitative basis, taking into account relative cost and pollution reduction benefits. A priority ranking for implementation is assigned in Chapter 4 based upon review and discussion with Simpson. Barriers to pollution prevention are identified in the following sections.

The scope of work for this project required that existing information and available data be used to complete the opportunity assessment. In the ongoing process of planning and implementation, Simpson will perform more detailed engineering assessments and more refined cost estimates than what are included in this report. In addition, field monitoring programs and other data collection activities may be performed in the process of determining the feasibility of some of the recommended pollution prevention options.

Simpson Tacoma Kraft Company was the primary source of information and data. Much of the information was obtained during two site visits conducted on January 10 and 13 - 15, and February 24 - 26, 1992, and from review of Simpson files. Additional information and data not specific to Simpson were evaluated from several literature sources identified in the list of references.

2.3 MILL EMISSIONS AND DISCHARGES

Table 2 presents a summary of estimated emissions and discharges to the atmosphere, to Inner Commencement Bay and to the land from Simpson for 1988 through 1991 (Ref. 2). The release estimates were developed and reported by Simpson to comply with the requirements of SARA Title III, Section 313, Toxic Chemical Release Inventory. Following is a brief review of sources of the estimated releases.

Acetone, methanol, acetaldehyde, and catechol are generated in large quantities during kraft pulping. The great majority of the amounts generated are collected and combusted with the non-condensible gases in the lime kilns at Simpson, or digested in the biological wastewater treatment system. Most of the acetone and methanol emissions were associated with miscellaneous uncontrolled vent gases from brownstock washers, foam tanks, seal tanks, and open screen room operations. The balance was estimated as emissions from the wastewater collection and treatment system and from effluent discharges.

The ammonia releases are from the treated wastewater effluent. Ammonia is added as a nutrient in the biological treatment process and the excess is discharged. Catechol releases are effluent discharges and are estimated from the amount of black liquor solids lost to the sewer and an assumed 95% reduction through the treatment process (Ref. 13).

Chlorine emissions result from operation of the old bleach plant (during part of 1989). The significant reduction in chlorine emissions in 1990 is attributed to operation of the new bleach plant which is equipped with a vent scrubber for all chlorine containing streams. Chlorine dioxide emission estimates are based upon an assumed efficiency of 95% for the bleach plant scrubber (Ref. 13). The significant reduction in chloroform emissions and discharges is also the result of the new bleach plant operation.

Formaldehyde emissions and discharges were associated with the use of a wet strength resin containing formaldehyde, which has since been discontinued. The change in estimated hydrochloric acid emissions between 1989 and 1990 is due to the use of measured recovery boiler emissions for 1990 vs. estimated releases for 1989 based upon emission factors. The increase in methanol and acetone releases between 1988 and 1991 is due to an increase in production of about 15%. Over the same time frame, Simpson went to natural gas and reduced oil firing in the boilers, causing a major reduction in sulfuric acid release.

In 1990, Simpson began reporting total ammonia rather than free ammonia (NH_3) as it had in 1988 and 1989. Total ammonia includes NH_4^+ and NH_3. Estimates are based on measured ammonia levels in Simpson's effluent and NCASI emission factors corrected for temperature and pH. Thus, the change in reported ammonia levels does not reflect a change in process or operations.

Table 3 presents a summary of total reduced sulfur (TRS) emissions based upon a study of odor sources in Pierce County conducted for the Pierce County Department of Community and Economic Development (Ref. 3). The emission sources are reviewed for possible pollution prevention alternatives in the following sections.

Table 2

SIMPSON TACOMA KRAFT COMPANY
SARA SECTION 313 TOXIC CHEMICAL RELEASE INVENTORY
(Emission estimates in lbs/year)

Pollutants	1988	1989	1990	1991
Acetone	46,050	46,245	48,753	50,265
Ammonia	612	622	48,308	46,434
Catechol	3,128	5,049	1,618	54
Chlorine	128,019	22,677	3,375	3,895
Chlorine Dioxide	NA	7,392	10,539	7,859
Chloroform	473,204	197,746	36,178	32,299
Formaldehyde	25,042	5,406	7,725	3,520
Hydrochloric Acid	NR	1231,767	254,452	29,379
Methanol	312,601	329,367	349,309	386,469
Nitric Acid	0	0	0	0
Phosphoric Acid	0	0	0	0
Sulfuric Acid	51,531	166,160	147,868	62,452

NA = Not applicable NR = Not reported

Table 3

SIMPSON TACOMA KRAFT COMPANY
POINT SOURCE TRS EMISSIONS NOT CONNECTED TO
NON-CONDENSIBLE GAS SYSTEM

SOURCE	TRS EMISSIONS (lbs/day)	PERCENT OF TOTAL
No. 3 Recovery Boiler	60.6	60.0
No. 4 Recovery Boiler	11.1	11.0
No. 1 Lime Kiln	6.13	6.1
No. 2 Lime Kiln	4.17	4.1
No. 2 & 3 Brownstock Washers	NM	–
No. 2 & 3 Foam Tanks	3.51	3.5
No. 1 & 2 Black Liquor Filters	0.068	< 0.1
Black Liquor Tanks 9 - 12	0.136	< 0.1
Smelt Tanks	15.2	15.1
Total	100.9	100

Notes:
- Emissions for No. 3 and 4 recovery boilers and No. 1 and 2 lime kilns are annual averages for 1991 based upon continuous emission monitoring data.
- Emissions from the No. 2 and 3 brownstock washers need to be determined.
- Emissions from other sources from Reference 3.

3.0 POLLUTION PREVENTION OPPORTUNITY ASSESSMENT RESULTS

3.1 WOODYARD - CHIP HANDLING AND STORAGE

Chip handling and storage operations at Simpson generate the following waste streams:

- Fugitive dusts
- VOC emissions from chip piles
- Stormwater runoff

These waste streams and pollution prevention alternatives for each are discussed in the following sections.

3.1.1 Fugitive Dusts (Recommended Project #1)

Wood chips prepared offsite comprise the fiber furnish at Simpson. Based upon observations during the site visits and discussions with mill personnel, chip quality is highly variable. Incoming chips contain considerably more fines than are typically found at mills where round wood is chipped onsite. Within the past three years Simpson has installed retaining walls to contain chips and fugitive dusts from the chip piles ($265,000), and has instituted modified barge unloading operations (front loader vs. clam shell) to minimize chip and dust losses ($1,200,000). While these improvements have been effective, fugitive dust emissions from the chip distribution system on top of the chip piles continue to result in accumulations of fines outside the retaining walls. The magnitude of the fugitive emissions was not quantified, but based upon the amount of fines found outside the retaining walls, the emissions were judged to be important in the context of this project. A water spray system is a potential means to minimize fugitive dust emissions. Primary or fully treated effluent can be used to supply water to the sprays to avoid additional fresh water consumption and icing problems that may develop during cold weather. The potential for additional VOC emissions and odors could be minimized by using fully treated effluent rather than primary effluent as spray water. In Simpson's past experience, a water spray system has not been effective. Costs for installing a sophisticated water spray system or a fully enclosed vacuum system may range from $100,000 to $1,000,000. Further engineering analysis needs to be done to evaluate these and other feasible, cost-effective measures for controlling fugitive dusts.

3.1.2 VOCs from Chips in Inventory

Chips in open chip piles and chip silos at virtually all pulp mills emit volatile organic compounds (VOCs) during storage. Although odors were evident near the Simpson chip piles, they were not disagreeable and not discernable away from the piles. Literature references citing quantified VOC emissions from chip piles could not be found. Rough estimates of emissions could be made from differences in measurements of terpenes and tall oil in chips as received, and from chips fed to the screen room or digesters (Ref. 4).

No reasonably available technologies or management practices are currently known for controlling VOC emissions from chip piles. Chip silo vents could be routed to a power boiler to control emissions; however, the emission reduction benefits are judged to be small. Accordingly, these emission sources were not selected for further evaluation as part of this project.

3.1.3 Stormwater Runoff (Recommended Project #2)

Simpson collects stormwater inside the dike that surrounds the chip piles. The collected stormwater is treated in the wastewater treatment facility. Based upon observations during the site visits, runoff containing chips and dust is reaching the St. Paul waterway from the shoreline near the barge unloading area. The amount of sawdust and chips reaching receiving waters was not quantified. Curbing and diking should be improved to prevent, to the maximum extent practicable, runoff containing chips and dust from reaching the St. Paul waterway and Inner Commencement Bay. Collected materials can be recovered as usable chips or as hogged fuel. The cost for improved curbing and diking is estimated at less than $25,000. If additional collection piping, sumps and pumps are required, the cost may be in the $80,000 - $100,000 range.

3.2 CHIP PREPARATION

Process improvements in chip preparation are available to improve productivity and lower bleach plant chemical consumption, and thus reduce pollutant generation. Chip fines are the principal waste generated from chip screening.

3.2.1 Chip Screening (Recommended Project #3)

Chip uniformity promotes more effective and efficient pulping and results in pulp of more uniform quality. The chip screening process at Simpson is not modern. Chips are screened for size only, with no thickness controls. Thickness controls are nearly always installed at modern mills and when woodyards are upgraded. Chip thickness screens have been installed at bleached kraft mills for $2,000,000 - $4,000,000. Simpson estimates that it would cost $4,000,000 - $6,000,000 to retrofit chip thickness screens at the Tacoma mill.

Upgrading chip screening at Simpson is not considered a high priority. Limited available data suggest that Simpson does not generate detectable levels of chlorinated dibenzo-p-dioxins and chlorinated dibenzofurans (CDDs/CDFs) in its pulp bleaching operations, and that other chlorinated compounds are found at relatively low levels. This is most likely attributable to state-of-the art brownstock pulp screening and deknotting, exceptional washing afforded by the No. 4 brownstock pulp washer, and current bleach plant practice.

3.2.2 Wood Waste

Wood waste generated from the screening operation is in the form of sawdust and fine rejects from the screens. These wastes are collected and transferred by conveyor to the No. 7 power boiler as hogged fuel for power generation. Thus, the energy value from the waste is recovered. Oversized material from the screening operation is re-chipped and reprocessed.

3.3 PULPING, CHEMICAL RECOVERY AND POWER GENERATION

Kraft pulping and chemical recovery processes are among the more efficient manufacturing processes in basic industries. Delignification of the pulp is accomplished with recoverable inorganic chemicals, and the energy value of the lignin and other wood extractives are recovered in the recovery boiler in the form of superheated steam for power generation and process steam. Crude turpentine and tall oil can be recovered as by-products of kraft pulping. Wastes generated are relatively small in volume compared to the amount of wood fiber processed and process chemicals in circulation in the pulping liquor and causticizing recovery cycles.

Notwithstanding the efficient nature of the process, there are numerous emission points, wastewater effluents, and solid waste streams from kraft pulping and chemical recovery processes. Air emissions include odorous reduced sulfur compounds commonly referred to as total reduced sulfur (TRS), and particulates. TRS comprises hydrogen sulfide (H_2S), methyl mercaptan (CH_3SH), dimethyl sulfide (CH_3SCH_3) and dimethyl disulfide (CH_3SSCH_3). Particulates (fly ash), sulfur oxides and nitrogen oxides are also emitted from the recovery and power boilers. The principal sources of TRS include kraft digester blow and relief gases, rotary vacuum washer hoods, foam tank vents and seal tank vents, evaporator hot well vents, recovery furnace flue gases, smelt dissolving tanks, slaker vents, black liquor oxidation tank vents, and fugitive emissions from black liquor spills and wastewater collection and treatment systems. Particulate emissions are predominantly sodium sulfate (Na_2SO_4) and smaller amounts of sodium carbonate (Na_2CO_3) from recovery furnaces and various sodium compounds from lime kilns and smelt tanks (Ref. 5).

Sources of wastewaters associated with kraft pulping and chemical recovery operations include spills and leaks of black liquor, digester, evaporator and turpentine condensates, evaporator boil-out solutions, pulp screening and deknotting reject streams, decker filtrates, and water used to flush green liquor dregs to the sewer. At most mills, foul condensates, black liquor spills and decker filtrates contribute the greatest loadings of oxygen demanding substances and volatile pollutants to the sewer.

The principal solid waste streams generated from kraft pulping and chemical recovery operations are knots and screen rejects from pulp deknotting and screening, green liquor dregs and lime slaker grits. Knots and screen rejects are internally repulped and fed back into the process at Simpson. Power boilers using hog fuel generate bottom ash, which may be handled dry or sluiced from the boiler, intermediate ashes that may be collected in multiclones, and fly ash that may be collected in electrostatic precipitators or baghouses.

The pulping and chemical recovery operations at Simpson are a combination of older and new technologies. The batch digesters are pre-1950's vintage; the Kamyr continuous digesters were installed in 1961 and 1962; pulp washing lines No. 2 and 3 are older rotary vacuum drum washers; the No. 4 Chemi-washer and associated screening and deknotting equipment installed in 1991; the evaporators were installed in 1950, 1961 and 1973; the recovery furnaces were installed in 1961 and 1973; the lime kilns in 1961 and 1973; and, the recausticizing plant was upgraded in 1991 (Ref. 1). Much of the newer equipment provides enhanced environmental control.

Figures 3 - 7 are schematic diagrams of the pulping and chemical recovery processes at Simpson. Process improvements, pollution control and pollution prevention projects recently completed by Simpson include partial black liquor spill control and recovery ($280,000, 1989-90), installation of the No. 4 brownstock washer ($19,000,000, 1991), upgrade of the recausticizing area ($10,000,000, 1991), reuse of No. 4 evaporator condensate on No. 3 brownstock washer ($100,000, 1990), installation of the No. 7 power boiler ($24,000,000, 1991), and expansion of the non-condensible gas (NCG) system to include vents from two 63% black liquor tanks and black liquor oxidation tanks ($700,000, 1989).

3.3.1 Digesters, Brownstock Washers, Black Liquor Storage, and Evaporators

Simpson has a non-condensible gas (NCG) collection and destruction system for low-volume high-strength (LVHS) TRS sources. As originally installed the NCG system included batch digester blow tanks, Kamyr digester relief gases, steam vents, flash tanks, concentrators, concentrator tail gases, concentrator hot wells, and evaporator tail gases and hot wells. The NCG system comprises collection piping, a vapor sphere, condensers, safety devices (relief valves and rupture disks, flash back screens, etc.), and steam ejectors (Ref. 3). As noted above, vents from two 63% liquor tanks and the black liquor oxidation tanks were subsequently added to the system. The collected gases are incinerated in an operating lime kiln.

High-volume low-strength (HVLS) gas streams containing TRS are not controlled at Simpson. These include vents from the No. 2 and 3 brownstock washers and associated deckers and foam tank vents. Vents from four black liquor storage tanks and three black liquor filters are low-volume, low concentration streams that are not controlled for TRS. An EPA-sponsored study is currently underway to quantify emissions from many of the sources mentioned above.

Currently, Simpson reuses evaporator condensate for brownstock washing on the No. 3 washer. Simpson also plans to conserve water by using more contaminated condensates for brownstock washing on the No. 2 and 3 washers. The TRS emissions from the washer vents at Simpson have been found to contain less than 1 ppm TRS, but due to the high vent flow rates (>11,000 acfm and 128,000 acfm for No. 2 and 3 washer vents, respectively), mass emissions could be important in terms of overall mill emissions at concentrations less than 1 ppm. The National Council of the Paper Industry for Air and Stream Improvement, Inc. (NCASI) reports that TRS emissions from washer roof vents increased by 3 to 5 times when contaminated condensates rather than fresh water were used for washing (Ref. 6). Thus, increased emissions of TRS, as well as emissions of other volatile compounds

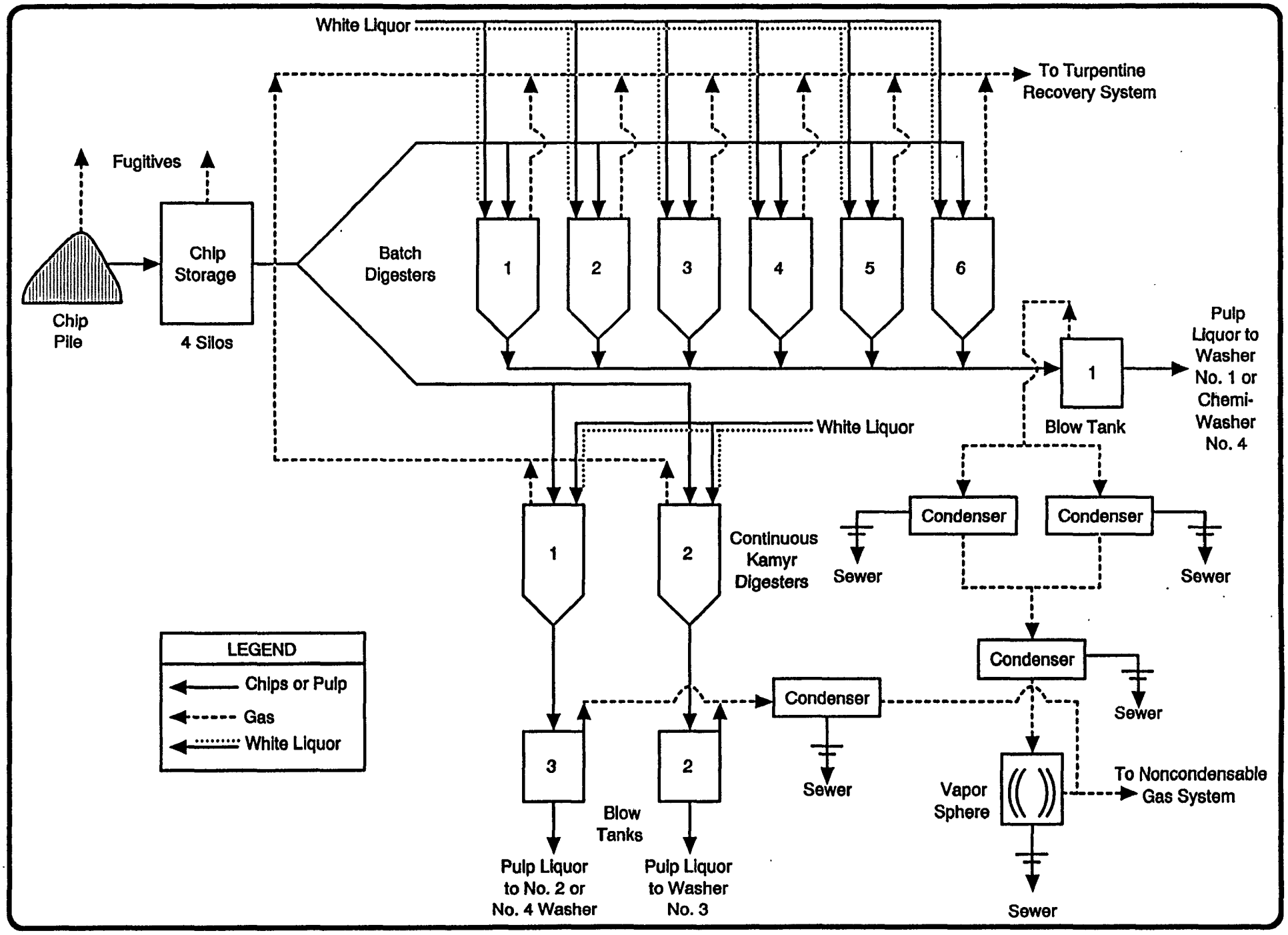

Figure 3

WOOD PREPARATION AND DIGESTION PROCESSES AT THE SIMPSON TACOMA KRAFT MILL

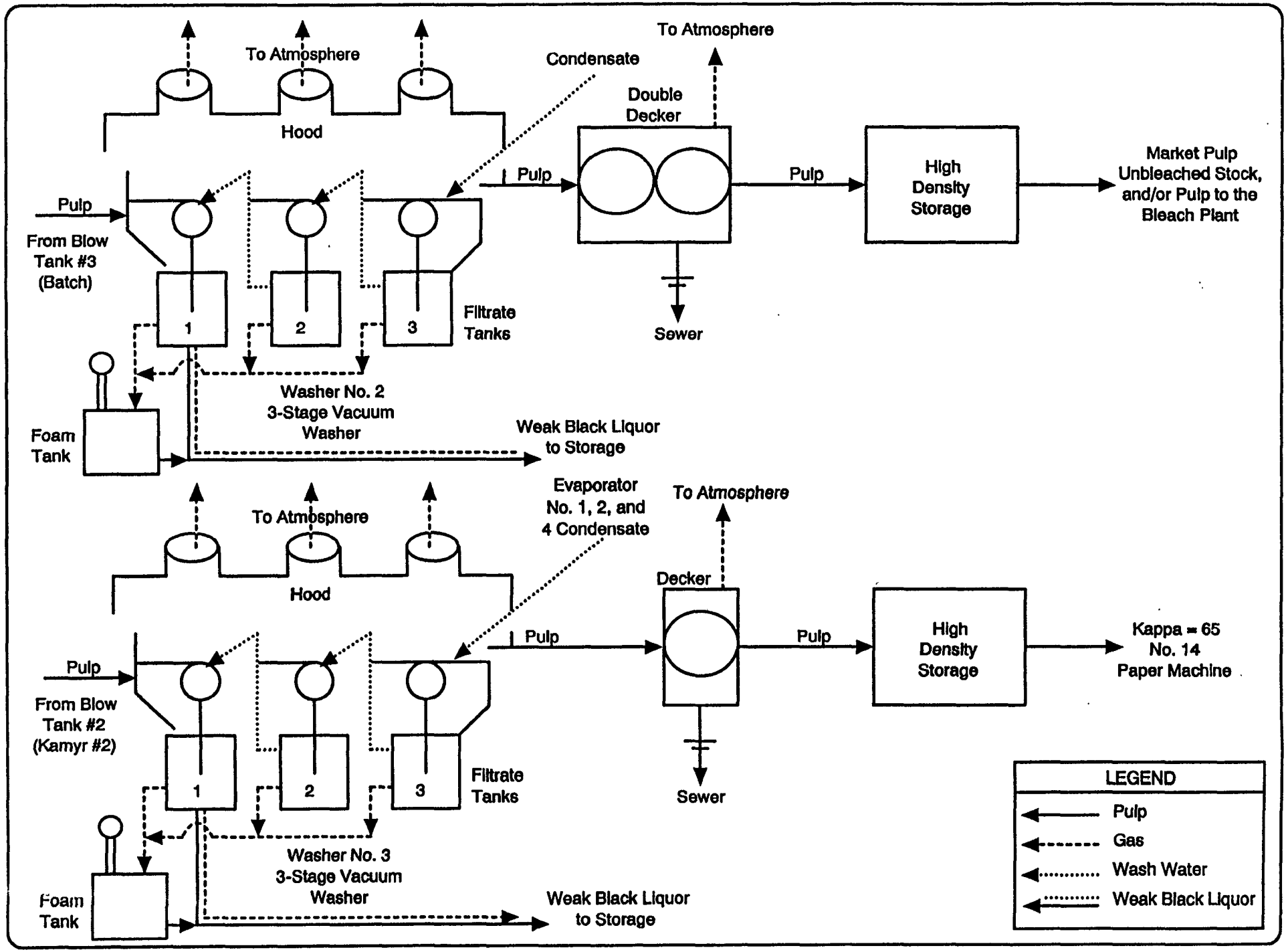

Figure 4

PULP WASHING AT THE SIMPSON TACOMA KRAFT MILL

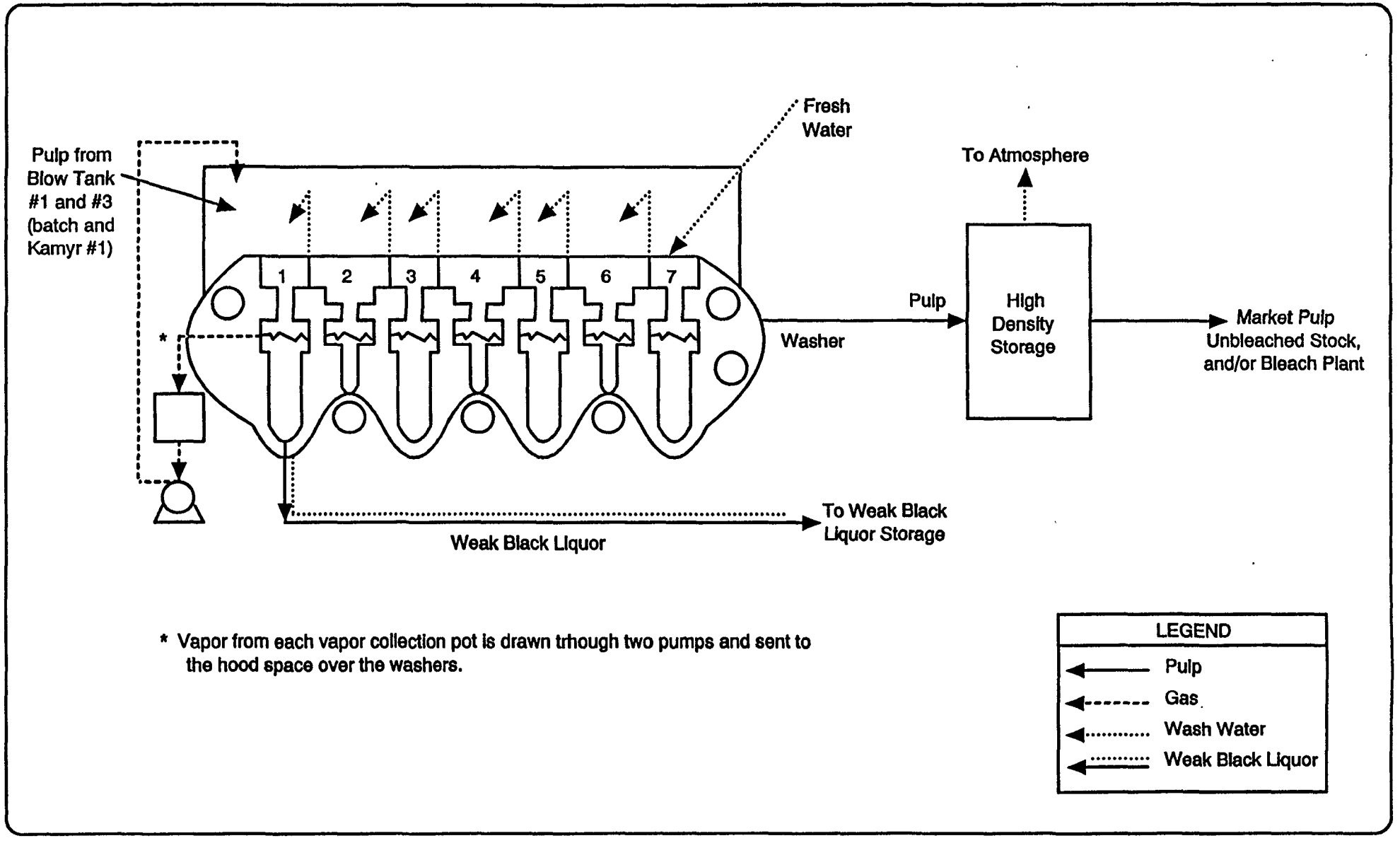

Figure 5

NO. 4 WASHER AT THE SIMPSON TACOMA KRAFT MILL

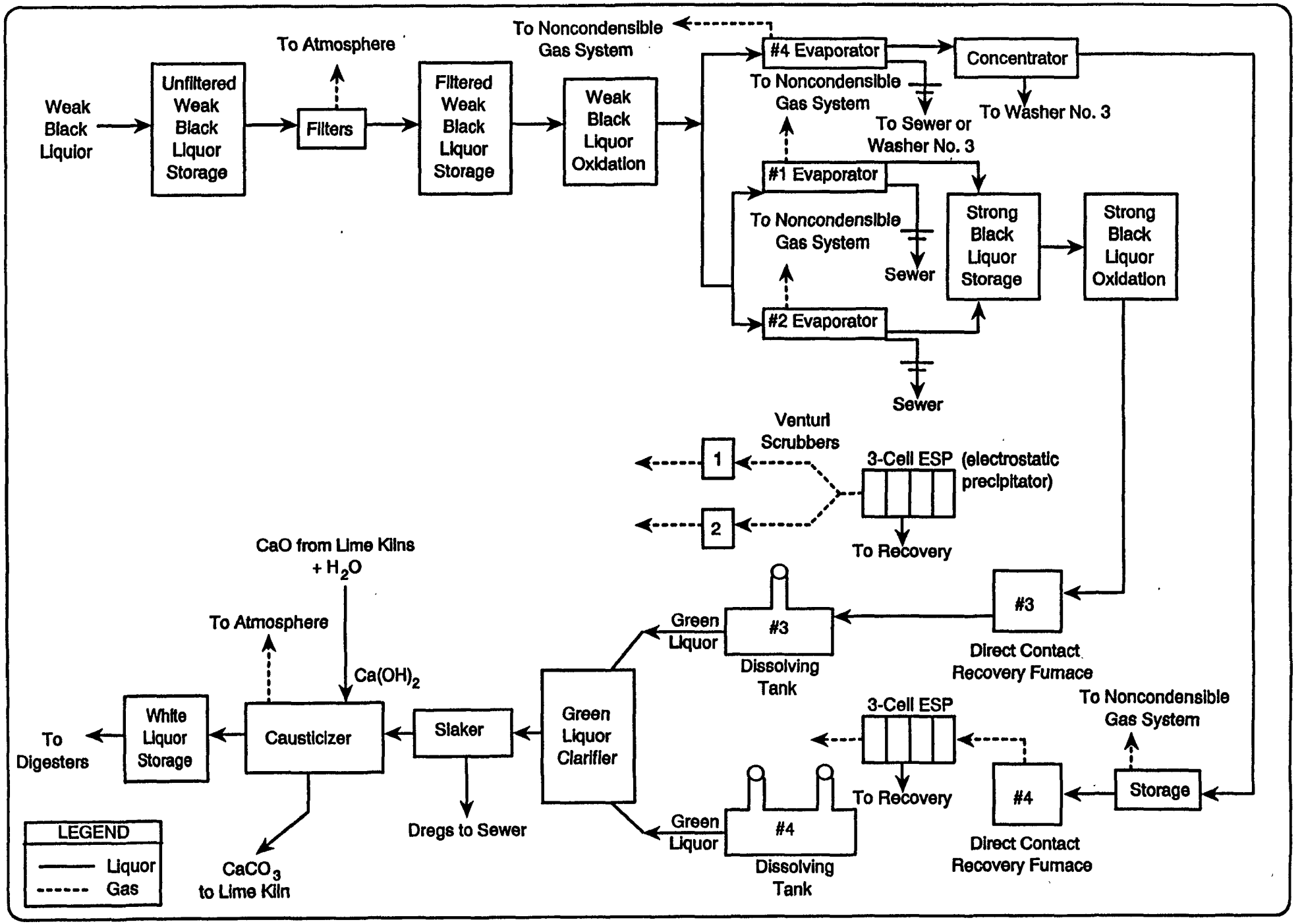
Weak Black Liquior
Unfiltered Weak Black Liquor Storage
To Atmosphere
Filters
Filtered Weak Black Liquor Storage
Weak Black Liquor Oxidation
To Noncondensible Gas System
#4 Evaporator
Concentrator
To Noncondensible Gas System
To Sewer or Washer No. 3
To Washer No. 3
#1 Evaporator
To Noncondensible Gas System
Sewer
Strong Black Liquor Storage
Strong Black Liquor Oxidation
#2 Evaporator
Sewer
Venturi Scrubbers
1
2
3-Cell ESP (electrostatic precipitator)
To Recovery
CaO from Lime Kilns + H_2O
To Atmosphere
$Ca(OH)_2$
Green Liquor
#3
Dissolving Tank
#3
Direct Contact Recovery Furnace
To Noncondensible Gas System
3-Cell ESP
To Digesters
White Liquor Storage
Causticizer
Slaker
Green Liquor Clarifier
To Recovery
#4
Storage
Dregs to Sewer
Green Liquor
#4
Dissolving Tank
Direct Contact Recovery Furnace
LEGEND
Liquor
Gas
$CaCO_3$ to Lime Kiln

Figure 6

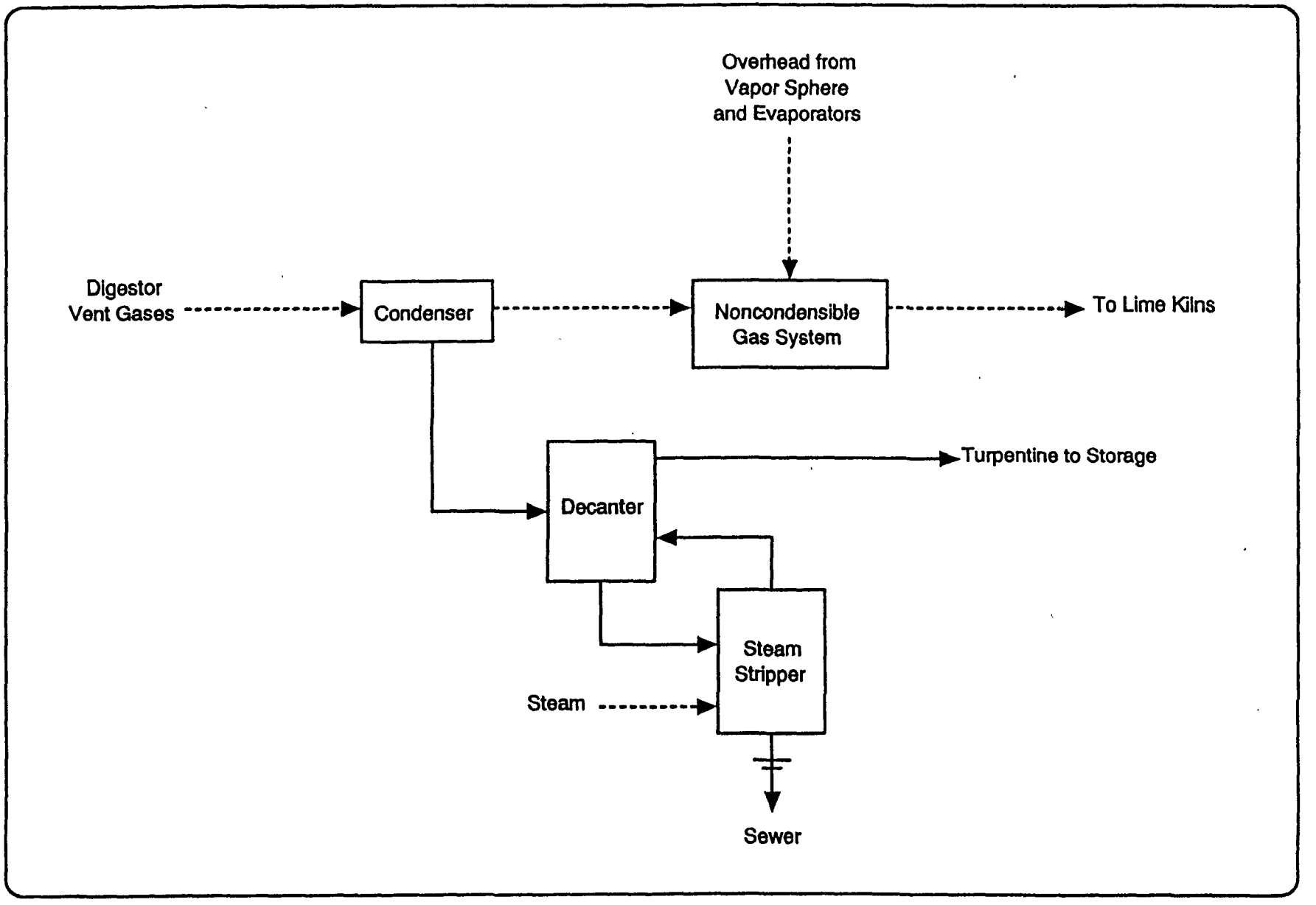

Figure 7

TURPENTINE RECOVERY AT THE SIMPSON TACOMA KRAFT MILL

present in the contaminated condensates, can be expected on the water lines. This condensate reuse process, however, does remove the condensate from the wastewater stream, thereby eliminating one of the major oxygen demanding streams from the effluent and reducing TRS and VOC emissions from the wastewater treatment system.

The No. 4 brownstock washer is closed with no direct vents to the atmosphere. Any emissions from the No. 4 washer, which should be minimal, are from the brownstock storage chest which is vented directly to the atmosphere.

Low-strength TRS streams are controlled at many mills by routing the washer, foam tank and decker vents to a power boiler for combustion of TRS. At these mills, the washers and deckers are enclosed, and the volume of air to be vented is small in comparison to high volumes from the older rotary vacuum washers at Simpson (total of 139,000 acfm for No. 2 and 3 washers). Additional ways to further minimize TRS and VOC emissions are: (1) incinerate emissions off the washer lines in the power boiler, (2) steam stripping (see Section 3.3.5), or (3) replace the No. 2 and 3 washer lines (recommended project #5). Consideration of ways to reduce TRS and VOC emissions from the washer lines will become more important as Simpson is planning to increase the use of foul condensates for brownstock washing.

Other means of minimizing TRS and VOC emissions include more effective black liquor spill prevention (recommended project #6, see Section 3.3.6), and expansion of the NCG system to include all liquor storage tank and filter vents (recommended project #4). TRS emissions from these vents are minor when compared to potential emissions from the brownstock washer vents (Ref. 4). These liquor storage tank and filter vents are low volume and in reasonable proximity to the NCG collection system. Should modifications to the NCG system be planned, these vents could be included at relatively low cost. The screen room associated with the No. 2 and 3 brownstock washers at Simpson is open and thus knotters and screens are additional emission sources. These are relatively minor emission sources that are typically controlled only when screen rooms are upgraded or replaced with closed screen rooms.

Foam tank vents are estimated to emit 3.5 lbs/day TRS, and the combined exhaust volume is estimated to exceed that which can be diverted to the NCG system. An alternate control strategy would be to route the tank vents to the power boiler for incineration. A cost estimate for this alternative would require more engineering detail than what was available and was beyond the scope of this report.

3.3.2 Recovery Boilers

The No. 3 recovery boiler is a conventional direct contact evaporator kraft recovery furnace installed in 1961 and rated at 215,000 lbs/hr steam and 58,300 lbs/hr black liquor solids (Ref. 4). TRS emissions are controlled by weak and strong black liquor oxidation and by boiler operating practice. TRS emissions during the first half of 1988 averaged about 95 lbs/day, or about 37% of permitted emissions for this unit. At that time, the boiler emitted more than half of the TRS from the mill.

These levels were judged to represent best operating practice for a recovery boiler of this design (Ref. 4). The annual average emission rate for 1991 was reported at about 61 lbs/day, or about 24% of permitted emissions.

The No. 3 recovery boiler can be converted to low odor design at high cost (approximately $35,000,000) by removal of the direct contact evaporator and installation of an economizer section to cool the exit gases ahead of the electrostatic precipitator (recommended project #11). Other modifications, including changes to the No. 1 and 2 evaporators the addition of another concentrator, will also be necessary. The minimum downtime to make the conversion would probably be in excess of three weeks. Several conventional design boilers were converted to low odor design in the 1970's and 1980's, but given the age of the Simpson boiler and its remaining useful life, an expenditure of this magnitude for further TRS reduction will require further evaluation. At some point in the future (beyond 5 years) Simpson will either replace the No. 3 boiler with one that is designed to attain New Source Performance Standards and will be of low odor design, or Simpson will upgrade the boiler as described above.

The No. 4 recovery boiler is a low odor design kraft recovery furnace installed in 1973 and rated at 470,000 lbs/hr steam and 108,000 lbs/hr black liquor solids (Ref. 4). TRS emissions are controlled by boiler operating practice. The boiler firing rate and excess air are controlled to assure complete combustion of TRS. Emissions for the first half of 1988 averaged about 20 lbs/day, more than 80% below allowable emissions. Annual average 1991 emissions were reported at about 11 lbs/day.

Smelt tank vents (one on No. 3 recovery boiler and two on No. 4 recovery boiler) are scrubbed with weak wash to control particulates and for partial control of TRS. The scrubber water is recycled to the recaust area. Total TRS emissions from the smelt tanks are about 14.5 lbs/day (Ref. 3). These emissions could be further controlled by directing the smelt tank vents to the power boiler (recommended project #10). Whether this option has been previously implemented within the industry is unknown. An engineering analysis and cost estimate for connecting the tank vents would need to be developed to further evaluate the utility and feasibility of this alternative. If shown to be a workable option, the cost of implementation is estimated at over $1,000,000.

Particulate emissions from the recovery boilers were found to be within allowable emission limitations. Additional pollution prevention alternatives for particulate were not considered for these sources. A replacement or upgrade of the No. 3 recovery boiler would involve state-of-the-art particulate emission controls. Collected particulates, comprising principally Na_2SO_4 and, to a lesser extent Na_2CO_3, are returned to the recovery system to enable reuse of these chemicals.

3.3.3 Recausticizing and Lime Kilns

The recausticizing plant was upgraded in 1991 at a cost of $10,000,000. The upgrade included new piping and modifying the clarification systems, causticizers, white liquor filters, lime storage and slakers, bucket elevators to reduce fugitive dust emissions, and associated pumping systems. Weak wash is used as scrubber water on the three smelt tanks, the bleach plant/chlorine dioxide plant scrubber, and the lime kilns. All scrubber water is collected and returned to the causticizing circuit.

Green liquor dregs are sewered at Simpson and processed in the end-of-pipe wastewater treatment system and are fed into the No. 7 power boiler with wastewater treatment sludges where the carbonaceous material is combusted. Lime slaker grits are water washed to pH < 12.5, so that they may be disposed of as a non-dangerous waste per Washington Department of Ecology regulations.

TRS emissions for the No. 1 and 2 lime kilns were about 8.3 lbs/day and 2.4 lbs/day for the second half of 1988. Annual average lime kiln TRS emissions for 1991 were reported at 6.1 and 4.2 lbs/day for the No. 1 and 2 kilns, respectively. A new belt feeder and a new mud filter were installed as part of the recausticizing area upgrade to provide a drier feed to the No. 1 kiln, thus minimizing TRS emissions. Simpson's production increased about 15% over this period with no commensurate increase in TRS emissions.

Because of Simpson's recent upgrade to state-of-the-art equipment, additional pollution prevention proposals were not developed for the recausticizing area. Simpson is currently exploring opportunities to reuse or recycle lime slaker grits. It may be possible to use lime slaker grits as a cement ingredient (recommended project #14).

3.3.4 Power Boiler

Simpson installed the No. 7 power boiler in 1991, at a cost of about $24,000,000. The boiler can be fired with wood waste, chip fines, natural gas, fuel oil, and wastewater treatment plant sludge. Simpson reported the following emission reduction benefits from this improvement:

PM_{10}	389 tons/year
Nitrogen oxides	91 tons/year
Carbon monoxide	182 tons/year
Visible emissions	to < 10 % opacity

The current practice is to fire the boiler with wood waste and dewatered primary and secondary wastewater treatment plant sludge. Natural gas is the principal supplementary fuel. Disposal of boiler ash is a major issue. The fly ash at times has contained low levels of selected chlorinated dibenzo-p-dioxins and dibenzofurans (CDDs/CDFs), and is currently being mixed with acidic hog fuel to assure a pH below 12.5. This material is then disposed of in a state-permitted landfill. Alternative use analysis is underway to assess potential use as a cement admixture and an agricultural amendment (recommended project #14).

About 20 yd^3/day of bottom ash (grate ash) is generated from the No. 7 boiler. Washington regulations (WAC 173-303-070 to 103) classify materials as dangerous wastes when the pH of a mixture of the waste and an equal amount of water exceeds 12.5. The grate ash has a pH greater than 12.5 when subjected to this test. In order to reduce the pH and to dispose of the ash in an approved landfill, Simpson performs elementary neutralization by mixing acidic hogged fuel with the ash at a ratio of 3:1 to bring the pH of the mixture to below pH 9.0.

Intermediate ash collected from the air preheater and multiclones contains a mixture of combustible carbonaceous material and ash. Simpson evaluated screening the intermediate ash, returning the fines to the boiler and processing the heavier ash with the grate ash. Thus, the energy values in the intermediate ash stream would be recovered and the volume ultimately requiring disposal would be reduced. Simpson found that the intermediate ash contained less than 15% carbonaceous material. As a result, this project is no longer under active consideration.

The practice of mixing grate ash with hogged fuel results in loss of energy values in the wood waste and increases landfill utilization. Waste disposal benefits from reducing the pH of the mixture, if any, are difficult to ascertain. This is a case where an Ecology regulation is perceived to hinder pollution prevention and energy efficiency. A long-term solution could entail a joint effort with Ecology and the industry to re-evaluate the regulation and potential beneficial uses of wood waste ash. Use of this material as a soil amendment is successfully practiced in other states including Oregon.

3.3.5 Digester and Evaporator Condensates

Batch digester relief gas and blow condensates, flash condensates from the continuous digesters, evaporator condensates are not stripped at Simpson. Turpentine condensates are stripped and recovered at the facility. Most of the condensate from the No. 4 evaporator is reused on the No. 3 brownstock washer. The balance of this condensate and all other condensates are currently sewered and treated in the end-of-pipe wastewater treatment facilities. The use of foul condensates for brownstock washing contributes to emissions of TRS and volatile pollutants. Sewering of foul condensates, however, accounts for a considerable portion of the raw BOD_5 wastewater loading (as much as 20,000 lbs/day out of 50,000 lbs/day) and contributes to emissions of TRS and volatile pollutants from the sewer system, the primary clarifier, and the sludge dewatering systems.

As part of its ongoing water conservation program, Simpson is planning to use the foul condensates (that are currently sewered) for brownstock washing on the No. 2 and 3 washer lines and as wash water on lime mud filters. This program will conserve 500 to 700 gpm of fresh water and reduce the BOD_5 loading to the sewer by a significant amount. While emissions of treatment plant TRS and volatile pollutants will also be reduced, and this practice will have water conservation benefits, emissions of TRS and VOCs from the washing lines will increase. Some of the methanol and acetone, two of the principal components of foul condensates, will be transferred to the pulp; some will be air stripped in the washers, and the balance will be returned to the black liquor system, thus concentrating in the evaporator condensates. This may increase the potential for VOC emissions over time from the washers, and to some extent, from the pulp dryers and paper machines.

Foul condensates are steam stripped at many kraft pulp mills and reused for a variety of hot water uses, the most common being brownstock pulp washing (Refs. 8, 9, 10, 11, 12). The overheads, which contain sulfides, methanol and acetone, are usually combusted in lime kilns, thus destroying most of the TRS and recovering heat value. Depending upon the volume of condensate to be stripped, the installed costs for steam strippers and appurtenant equipment may range from $2 - $5,000,000. Simpson estimates the cost may be as high as $8,000,000 and the issue of air toxics permitting needs to be reviewed (recommended project #7). Most of the TRS can be stripped with about a 4% steam/condensate ratio. Efficient removal of methanol and acetone requires a 15 to 20% steam/condensate ratio.

Simpson currently reuses condensates on the No. 2 and 3 washer lines to realize water conservation benefits and reduced BOD_5 effluent loadings. Incremental reductions of TRS and VOC emissions can be attained through stripping of foul condensates and reuse of fully stripped condensates for brownstock washing on the No. 2 and 3 washing lines. Steam stripping should be seriously considered and evaluated with other mill modernization or mill reconfiguration projects.

3.3.6 Black Liquor Spill Prevention and Control (Recommended Project #6)

Inspection of the pulping and chemical recovery areas during both mill visits revealed numerous spills and leaks of black liquor, both within the immediate process areas and around storage tanks. Simpson conservatively estimates that black liquor losses may be as high as 5% (Ref. 2) For purposes of estimating SARA Section 313 emissions, NCASI presented examples assuming a 2% liquor loss (Ref. 13). Simpson estimates the value of lost black liquor on a replacement cost basis as $0.30/gallon for 63% solids liquor, $0.24/gallon for 53% solids liquor, and $0.04/gallon for weak liquor. These costs do not include incremental heat value and wastewater treatment costs.

Simpson has made recent improvements to its black liquor spill collection system. Floor drains and tank sump drains in the washer areas have been routed to the weak black liquor system. This has minimized the amount of black liquor lost to the sewer, but has resulted in additional hydraulic loading to the evaporators from collection of the dilute flows. Simpson plans to modify the collection system to limit the number of drains that are connected to the weak black liquor system. This should result in less volume returned to the recovery system at higher liquor concentration. Available tank volume was cited as a limiting factor for spill collection.

In the fall of 1991, Simpson instituted a spill control management system, whereby the pulping and chemical recovery areas are checked each shift. Leaks are noted on a spill checklist and provided to the power and recovery superintendent who has responsibility for ensuring significant leaks and spills are repaired by the operating departments. Emphasis is placed on collecting and recovering strong liquor spills.

Based upon observations made during the site visits, a more effective black liquor spill prevention program is warranted to control fugitive emissions of TRS and VOCs. The proposed improvements include development and implementation of a spill prevention and management plan, and additional tankage to provide for supplemental surge capacity within the black liquor system and temporary storage of collected spills. Simpson estimates this option would cost over $1,000,000.

3.3.7 Pulping Process Modifications

Simpson typically cooks to brownstock Kappa numbers of 26-28 for pulp produced in the batch digesters and 30-34 for pulp produced in the Kamyr digester that is used to manufacture bleached pulp. Unbleached board stock pulp used to manufacture unbleached products is typically cooked to 65 Kappa. Pulping to lower Kappa numbers prior to bleaching has obvious production and pollution prevention benefits. A greater amount of delignification is accomplished with chemicals that are recoverable, and, bleach plant chemical consumption and costs are reduced to achieve a given final pulp brightness target. Reduced chlorine-based chemical consumption results in reduced formation of CDDs/CDFs, chloroform, AOX, chlorinated phenolics and color. However, this increased delignification without modifications to the digestion process to extended delignification [modified continuous cooking (MCC) or rapid displacement heating (RDH)] results in decreased yield. Pulping to low Kappa numbers for unbleached kraft pulp reduces yield and provides no benefits in terms of reduced formation of chlorinated compounds.

The two extended delignification processes with potential application to Simpson are Rapid Displacement Heating (RDH) for batch digesters, and Modified Continuous Cooking (MCC) for the Kamyr continuous digesters. Both processes involve subjecting the pulp to modified time, temperature, and alkaline cooking cycles. For softwood furnishes, Kappa numbers of 15 to 20 can be achieved with these technologies, with little or no degradation of pulp quality.

Given the age of the Simpson batch digesters and the space limitations near the digester building, retrofitting to an RDH process is judged not feasible. The process requires an extensive tank farm to allow for the numerous liquor exchanges that are key to the process, and sophisticated control systems that would not be suitable for old batch digesters.

The continuous Kamyr digesters at Simpson are of the single vessel design without separate impregnation vessels that are featured in newer models. Kamyr has advised the facility that Simpson's continuous digesters cannot be converted to an extended delignification mode of operation, nor for use as an impregnation vessel. If MCC were to be implemented by Simpson, a new continuous digester would have to be built, at a cost of approximately $50,000,000 (recommended project #12). A major conversion of this type would require consideration of other processes as well that could include oxygen delignification. These process modifications would only be made if there were a major change in the production mix at the mill toward higher tonnages and grades of bleached pulp.

Simpson can save about 150 gpm of excess hydraulic loading which is reaching the evaporators through direct steaming of the batch digesters for temperature control. The use of indirect digester heaters would reduce the liquor flow and permit recovery of 150 gpm of steam condensate (recommended project #13). This will allow for higher throughput of weak black liquor, conserve energy and steam condensate, and allow the mill to operate at slightly higher production. Simpson reported that although the digesters are equipped with indirect heaters, the heaters would probably need to be replaced to operate in this mode. This alternative is roughly estimated at less than $1,000,000.

Simpson has recently installed a 45 ton/day hydropulper for processing recycled newspapers (old news print - ONP) and double-lined kraft cuttings (DLK) for the purpose of conducting market studies and developing markets for mixed virgin fiber/secondary fiber products. This may result in an overall expansion of the productive capacity of the mill, or secondary fiber may be used to replace a portion of the virgin fiber (recommended project #8). Replacement of some or all of the batch digesters with equipment to process secondary fiber would include the installation of repulpers and extensive screens and cleaners (recommended project #19). This option is estimated at roughly $10 - 12,000,000.

3.4 BLEACHING

Simpson constructed a new 550 ton/day three stage bleach plant in 1989 at a cost of $28,000,000. Figure 8 is a schematic diagram of the bleach plant. Recently, the chlorine dioxide generating plant was retrofitted with a chiller and salt cake filter at a cost of $1,000,000 to increase production capacity from 12 tons/day to 24 tons/day. This generator uses methanol and low-salt chlorate. A permanent hydrogen peroxide storage tank was being considered at the time of one of the site visits to facilitate use of H_2O_2 in the extraction stage on a continuous basis. The bleaching sequence is $D_CE_{OP}D$, i.e., chlorine dioxide with a supplemental chlorine addition, caustic extraction boosted with oxygen and hydrogen peroxide, and 100% chlorine dioxide, with two chlorination mixing stages. The current practice is to operate at between 75 and 100% ClO_2 substitution, and maintain an average substitution rate of 85%. Simpson has the ClO_2 capacity to intermittently operate at 100% substitution, and does so from time to time in order to meet specific customer requests. Final brightness is typically 85-86 on the ISO scale, regardless of percent substitution.

Bleach tower vents from the D_C and D stages, all washers and filtrate tanks, the pre-bleach blend tank and the ClO_2 plant are exhausted to a single bleach plant scrubber operated with weak wash as a scrubbing fluid. The atmospheric vent from the E_{OP} stage is not controlled.

The bleach plant is operated with countercurrent filtrate flows. D stage filtrate is returned to the D_C stage and the E_{OP} stage. E_{OP} stage filtrate is also reused on the D_C stage. Excess D_C and E_{OP} stage filtrates are sewered. Fresh hot water is used for make-up on the D and E_{OP} stages. There are generally no solid wastes associated with bleach plant operations.

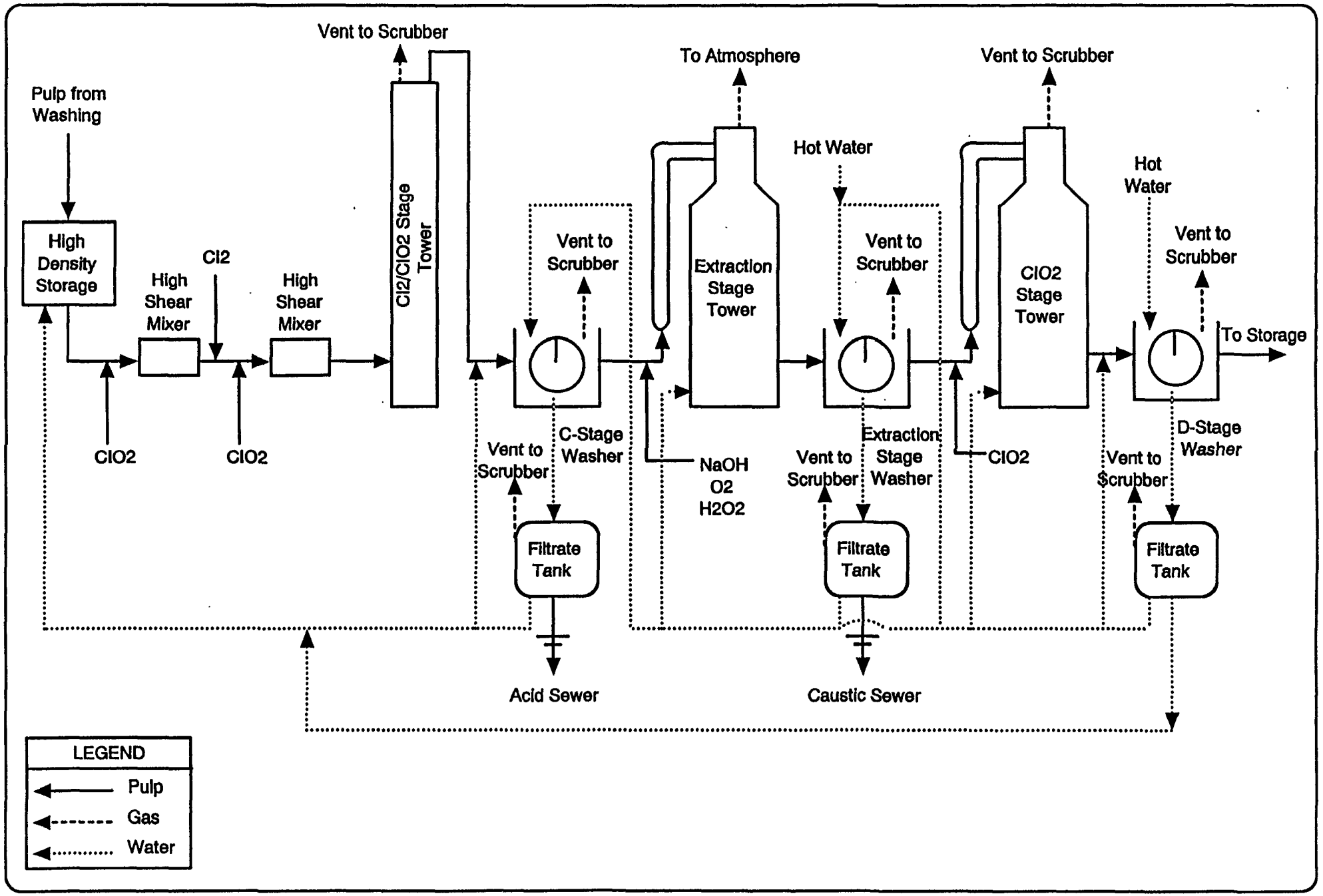

Figure 8

BLEACHING SEQUENCE AT THE SIMPSON TACOMA KRAFT MILL

Simpson has taken the most significant pollution prevention steps by installing state-of-the-art brownstock pulp screening, deknotting and washing systems, and by operating the bleach plant in a manner to minimize formation of CDDs/CDFs and other chlorinated compounds. Additional pollution prevention opportunities in the bleach plant are limited. A few options are described below.

3.4.1 Chloroform Reduction

The generation of chloroform at Simpson has been significantly reduced with operation of the new bleach plant and elimination of the use of sodium hypochlorite as a bleaching agent. Figure 9 is a plot of chloroform formation vs chlorine dioxide (ClO_2) substitution at Simpson for the new bleach plant (Ref. 14). The results demonstrate that formation of chloroform can nearly be eliminated if elemental chlorine is replaced with chlorine dioxide for pulp bleaching in the first bleaching stage. Current operating practice at Simpson is to operate at an average 85% ClO_2 substitution rate for most grades and at 100% substitution for selected products. At 70% substitution, the amount of chloroform generated is about 0.22 lbs/ton of pulp (Ref. 14). At 97% substitution, the rate of chloroform generation was reported at 0.012 lbs/ton, or about 95% less than at 70% substitution. The resultant amounts of chloroform generated at a production rate of 550 ADT/day for 70% and 97% substitution are 132 lbs/day and 7.2 lbs/day, respectively.

Formation of AOX, CDDs/CDFs, and tri-and tetra-chlorinated phenolics (catechols, phenols, guaiacols and vanillins) is also likely to be less at 100% ClO_2 substitution than at 70% and 85% substitution due the reduction in chlorine factor (Kappa/chlorine charge) (Ref. 15). The reported chlorine factor for 70% substitution was about 0.1, and for 97% substitution, about 0.01 (Ref. 14). This point should be verified through monitoring studies when the bleach plant is operated at 100% substitution.

Bleaching at 100% ClO_2 substitution rather than at relatively high rates (>70%) has been implemented at a number of mills for various reasons including market demands, ease of process control and elimination of chlorine handling. There is a cost penalty associated with operating the bleach plant at 100% substitution. This bleaching practice is considered to be a feasible alternative for Simpson (recommended project #16). Simpson operating personnel indicate that when operating at 100% ClO_2 substitution, a production penalty of 25% occurs due to limited capacity of the ClO_2 generator. A capital investment of an estimated $10,000,000 would be required to construct additional equipment to maintain a bleach plant capacity of 550 tons/day at 100% substitution.

3.4.2 Oxygen Delignification

Although chemically linked to the pulping and chemical recovery processes, oxygen delignification (OD) is often considered the first stage of pulp bleaching. Washed brownstock pulp is subjected to oxygen treatment in an alkaline environment, usually at medium consistency, for removal of as much as 40-45% of the residual lignin. Use of high consistency pulp may increase the removal of residual lignin to as high as 50%. As with the extended delignification processes, oxygen delignification results in significantly less bleach plant chemical consumption, reduced formation of chlorinated

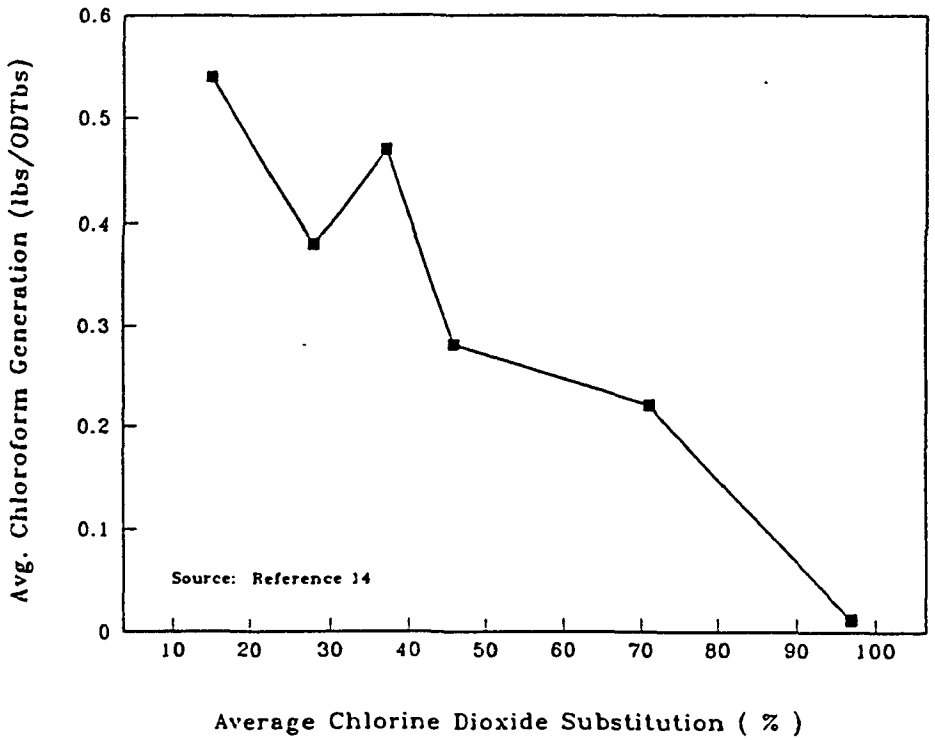

Figure 9

CHLOROFORM GENERATION VS CHLORINE DIOXIDE SUBSTITUTION AT THE SIMPSON TACOMA KRAFT COMPANY

compounds and less BOD and color in the effluent. However, these processes still require high substitution (>75%) to achieve non-detectable concentrations of dioxin and low AOX formation. OD would also generate additional liquor solids which would need to be incinerated in the recovery boiler. This increase has been reported in the literature to run between 3 and 5% (Ref. 16), and the Simpson facility is limited in its ability to burn more solids. Base on experience with OD in their Humboldt facility, Simpson reports that strength loss associated with oxygen delignified pulps may be a concern for certain products as well.

Oxygen delignification can be retrofitted at the bleach plant at Simpson (recommended project #15). Simpson has estimated that the capital cost would be about $15,000,000 to $20,000,000, and that the process would allow a production increase to 750 tons/day of bleached pulp from 550 tons/day. Unbleached pulp production would decrease in proportion. ClO_2 generating capacity and solids burning capacity would also have to be increased at substantial cost to achieve the higher production rates. Installation of oxygen delignification could result in potential VOC emissions from the oxygen reactor; however, a measurable net increase in VOC emissions over current practice is not expected.

Oxygen delignification would be a major modification of the current mill configuration. Such a large modification would require consideration of other processes as well, such as the addition of an extraction or bleaching stage to the bleach plant. Extensive engineering analysis would be undertaken before implementing any modification of this nature.

3.4.3 Other Chlorinated Compounds

After installing the new bleach plant, Simpson conducted a series of mill scale trails at ClO_2 substitution rates ranging from 15 to 100% without addition of hydrogen peroxide (H_2O_2) in the extraction stage, and at ClO_2 substitution rates ranging from 75 to 100% with H_2O_2 in the extraction stage. The results of these trials and a summary of the conclusions reported by Simpson are presented in Appendix C. The most significant findings were (Ref. 18):

- Simpson could achieve acceptable market characteristics for pulp at ClO_2 substitution rates ranging up to 100%
- Non-detect levels of 2,3,7,8-TCDD were reached at 75% ClO_2 substitution
- AOX final effluent levels of 1.5 kg/ton of pulp bleached were reached at 85% ClO_2 substitution
- The addition of H_2O_2 in the E_O stage stabilized bleach plant operations at high ClO_2 substitution
- Bleaching costs were significantly higher at 85 - 100% ClO_2 substitution than at 15 - 50% substitution

Based upon the results obtained from these trials, Simpson has been operating the bleach plant at 85% ClO_2 substitution to minimize formation of 2,3,7,8-TCDD and 2,3,7,8-TCDF. The mill scale trials were conducted prior to operation of the No. 4 Chemi-washer. Thus, washing losses during the trials were much higher than current washing losses (10 - 30 kg Na_2SO_4/ADMT vs < 5 kg Na_2SO_4/ADMT). Improved brownstock washing should result in less formation of AOX and other chlorinated compounds.

EPA is in the process of revising the effluent limitations guidelines for the pulp and paper industry. As part of the data collection effort for that project, EPA and the paper industry have initiated a joint long-term study to characterize the variability of wastewater discharges from eight mills where chemically produced pulps (kraft and sulfite) are bleached with chlorine and/or chlorine derivatives. The Simpson Tacoma mill is one of the mills participating in the study on a voluntary basis.

The study included two nine-week sampling episodes where bleach plant filtrates, combined untreated wastewaters (primary influents), final effluents, wastewater sludges, and bleached pulps were characterized through the analysis of 2,3,7,8-TCDD/TCDF and 29 chlorinated phenolics. The aqueous samples were also characterized for BOD_5, TSS, AOX and 57 volatile compounds. Sludges were also characterized for AOX and volatile compounds. The nine-week sampling episodes were scheduled to represent summer and winter operating conditions. A subset of samples from the winter sampling program were analyzed for 2,3,7,8-substituted CDDs and CDFs. One weekly 24-hour composite sample and associated grab samples for volatile compounds were obtained per sampling site during each of the nine weeks for the summer and winter sampling programs. The summer sampling program was conducted during the July to September 1991 period at most mills, and the winter sampling was conducted during the December 1991 to March 1992 period.

A preliminary review of some of the summer sampling data for Simpson indicated that the results are generally consistent with the conclusions from the Simpson mill trials summarized above. The new bleach plant appears to be very successful in minimizing dioxin and furan formation. EPA is currently evaluating the variability study data in terms of level of performance and variability within mills and across mills. Complete data from the study are anticipated to be summarized and reported in the development document for the revised effluent limitations guidelines.

Aside from those bleach plant process changes and pollution prevention measures discussed above (oxygen delignification and 100% ClO_2 substitution), the results from the Simpson mill trials and the preliminary data from the variability study do not suggest further bleach plant modifications beyond Simpson's current practice. The alternatives discussion above would reduce or eliminate elemental chlorine usage and result in lower bleach plant chemical consumption and lower formation of unwanted chlorinated compounds, including those measured as AOX.

3.5 PULP DRYERS AND PAPER MACHINES

The principal waste streams generated from papermaking and pulp drying are trim, broke, paper and pulp machine white waters (or brown waters) containing fibers and additives, and VOC emissions from paper making additives and carryover from the pulp mill. Trim, broke, and some paper machine white water are recycled internally.

The No. 13 paper machine at Simpson is a single headbox machine with average production capacity of about 250 tons/day. Principal grades produced include bleached food bag, unbleached bag, and lighter weight bleached linerboard. The No. 14 machine is a dual headbox machine with average capacity to produce about 750 tons/day of natural and white-top linerboard and heavier weight bleached or unbleached papers. The No. 14 machine is equipped with save-alls. White water is recovered for reuse at the pulp mill. The pulp machines and dryers are 1937 vintage machines with no fiber or water reclamation.

Simpson has instituted water and condensate recovery practices at the paper machines. About 65% of the steam condensate is recovered and returned to the boilers, and about 2 million gallons per day (mgd) of paper machine white water from the No. 14 machine is reused at the pulp mill. Simpson also discontinued use of a wet strength resin containing formaldehyde by substituting another resin (epichlorohydrate, used in reduced quantities) to eliminate formaldehyde emissions from that source.

3.5.1 No. 13 Paper Machine and Pulp Dryer Save-Alls (Recommended Project #17)

Installation of save-alls on the pulp dryers would result in fiber recovery and reduced total suspended solids (TSS) and BOD_5 loading to the wastewater treatment plant. Opportunities for reuse of cleaned white (or brown) water could then be explored. Estimated costs are in the $1-2,000,000 range.

3.5.2 Improved Steam Condensate Recovery and Water Conservation/Reuse (Recommended Projects #18 and #19)

Simpson estimates that it recovers about 65% of the steam condensate from the paper machines. Simpson reports that only a small amount of unreclaimed condensate is available for possible reclaim as steam box and wire pit steam are not reclaimable. As water conservation and the thermal balance in the mill become more critical with respect to wastewater treatment plant performance, recovery of additional steam condensate would prove beneficial. Boiler feedwater treatment costs would be reduced and hot water will be removed from the sewer system. Further improvements in water conservation and reuse from the paper machines will also provide pollution prevention benefits. Costs for these projects are estimated at less than $1,000,000.

3.6 WASTEWATER TREATMENT

Wastewater treatment at Simpson consists of screening, primary clarification, UNOX activated sludge and secondary clarification. The effluent is discharged by gravity to Inner Commencement Bay through a newly constructed submerged offshore outfall. Primary and secondary sludges are dewatered with screw presses and incinerated in the No. 7 power boiler. Ammonia and phosphoric acid are added to the primary effluent as nutrients to maintain biological activity. Simpson has constructed a pumping system to dilute the primary effluent with bay water to control temperature during warm weather months. As much as 5 mgd (20% of process wastewater effluent volume), may be used for this purpose. Figure 10 is a schematic diagram of the system.

Simpson's practice of controlling treatment system temperature with bay water probably has little or no adverse effect at current rates of addition; however, at higher addition rates, close attention must be paid to ensure proper operation of the biological treatment system to avoid possible impairment of the system. Recent reduction in hydraulic loading associated with diverting foul condensates from the sewer for reuse in the No. 2 and 3 washer lines has improved the efficiency of wastewater treatment and reduced hydraulic loading of the treatment plant.

The principal waste streams and emissions from the wastewater collection and treatment systems are (1) air emissions, including volatile emissions of TRS, methanol and acetone from pulping and chemical recovery wastewaters and black liquor spills, volatile emissions of chloroform and other volatile chlorinated organics from bleach plant wastewaters, and minimal emissions from the UNOX^R system; (2) solid wastes including primary and secondary wastewater treatment sludges; and (3) wastewater - the final effluent.

3.6.1 Volatile Pollutants

Many end-of-pipe wastewater treatment facilities at kraft pulp and paper mills are not equipped to treat volatile pollutants effectively. However, the UNOX^R system at Simpson is effective in digesting volatiles because the unit is closed and pressurized. Optimum control of these pollutants can be provided at the process level. Simpson's current practice of condensate reuse on No. 2 and 3 washer lines has reduced VOC loading to the treatment plant. Three additional projects reviewed above could result in further VOC and chloroform emission reduction benefits:

1. Steam stripping of foul condensates (recommended project #7)
2. Improved black liquor spill prevention and control (recommended project #6)
3. Operation of the bleach plant at 100% ClO_2 substitution (recommended project #16).

Additional feasibility and cost analyses must be completed to fully define potential emission reduction benefits and costs, taking into consideration other proposed and planned mill improvements. Based upon the results of full scale mill trials conducted at Simpson by NCASI, operation of the bleach plant at 100% ClO_2 substitution would result in minimal formation and subsequent emission and discharge of chloroform (Ref. 14). There are no cost effective means to control volatile pollutants effectively in large volume streams discharged to end-of-pipe treatment facilities. No such alternatives are proposed for Simpson.

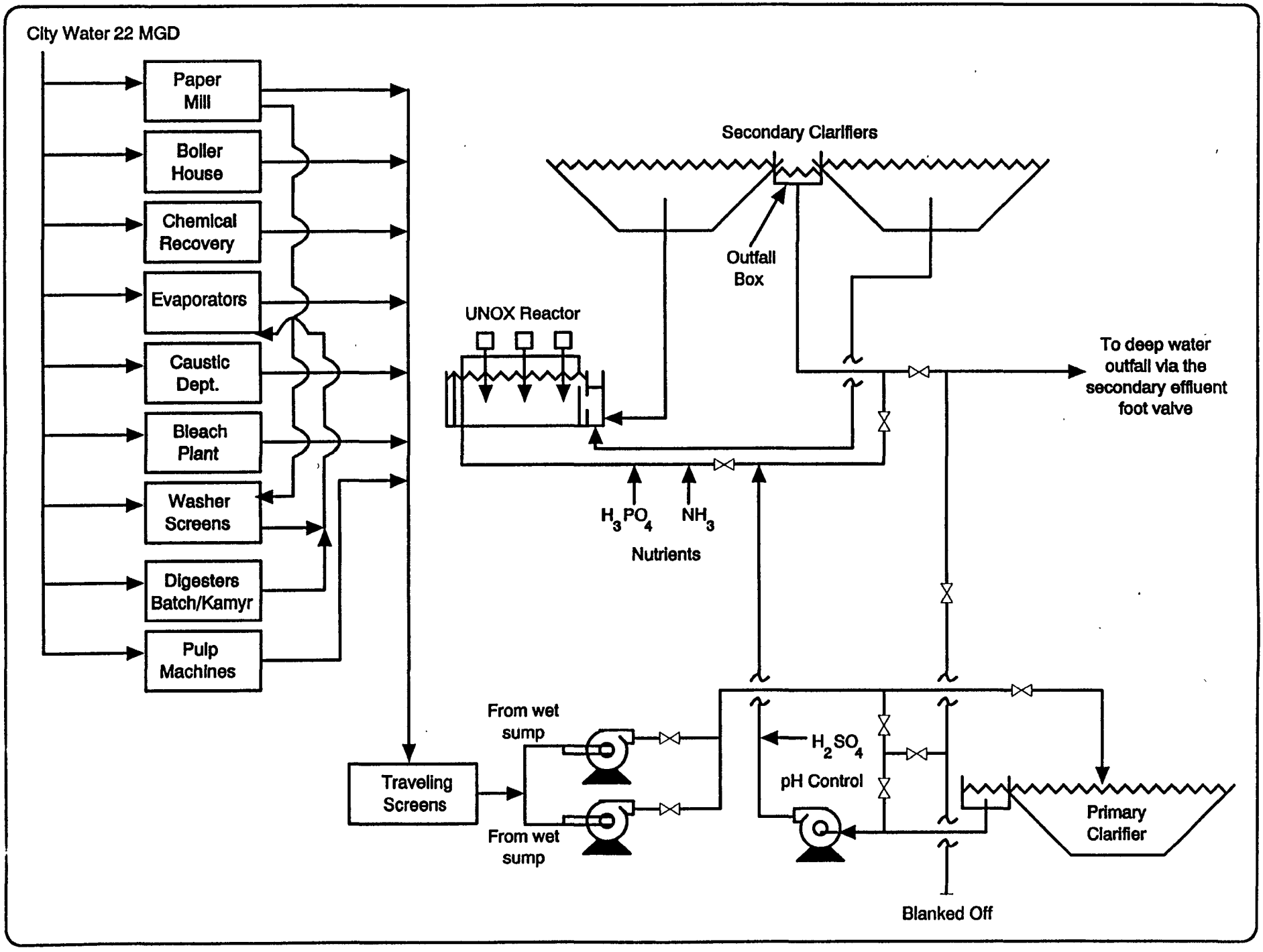
City Water 22 MGD
Paper Mill
Boiler House
Chemical Recovery
Evaporators
Caustic Dept.
Bleach Plant
Washer Screens
Digesters Batch/Kamyr
Pulp Machines
Secondary Clarifiers
Outfall Box
UNOX Reactor
To deep water outfall via the secondary effluent foot valve
H_3PO_4
NH_3
Nutrients
From wet sump
Traveling Screens
From wet sump
H_2SO_4
pH Control
Primary Clarifier
Blanked Off

Figure 10

3.6.2 Wastewater Treatment Sludges

About 35 dry tons of combined primary and secondary sludges are generated each day at Simpson. Primary sludge accounts for about 70% of the volume. Primary sludge is principally composed of wood fiber, green liquor dregs and other inert materials. Secondary sludge is primarily composed of biomass. Certain toxic pollutants such as selected chlorinated compounds are absorbed or adsorbed onto the biomass and tend to concentrate in secondary sludges.

Pulp mill wastewater treatment sludges contain sufficient fiber content for economic incineration in hogged fuel boilers for energy recovery. This practice has the added benefit of avoiding landfill disposal. No changes in management of wastewater treatment plant sludges are recommended for Simpson. Alternative sludge disposal practices used at other kraft mills include land application for tree farming, application as a soil conditioner in strip mined lands, and other agricultural uses. Such beneficial uses are highly recommended as pollution prevention options for pulp mill wastewater treatment sludges. Certain states have established regulations limiting agricultural uses and disposal options on the basis of CDD/CDF concentrations in bleached kraft mill wastewater sludges.

3.6.3 Wastewater Effluent

The end-of-pipe wastewater treatment system at Simpson appears to be properly operated and maintained, and the effluent quality for total suspended solids (TSS) and BOD_5 is representative of the better performing mills in the bleached kraft segment of the industry. Storm water from the chip piles and nearly the entire mill site is collected and processed in the wastewater treatment facilities.

For 1989, the long-term average TSS effluent concentration was about 40 mg/l, and the corresponding long-term average BOD_5 effluent concentration was about 23 mg/l. The average BOD_5 removal from primary effluent to final effluent was about 88%. The average TSS removal from untreated wastewaters to final effluent was about 85%. Based upon this level of performance, process operating changes are not suggested. Effluent reduction benefits for mass loadings of TSS and BOD_5 will result, however, from in-process controls and water conservation measures recommended in previous sections.

The ammonia-N effluent concentration averages 0.5 mg/l. At this level about 135 lbs/day (48,700 lbs/year) is discharged to Inner Commencement Bay. This amount of ammonia-N is minor relative to other sources, and nitrogen discharge levels in Commencement Bay have not been determined to be a problem. The ammonia-N discharge may be reduced by controlling the feed rate to the biological treatment system such that the residual is minimized (recommended project #20). The risks associated with minimizing the addition of ammonia are: (1) the efficiency of oxidation of carbonaceous material will decrease if sufficient ammonia is not available, and (2) the system will be less able to respond to black liquor spills and other shock loadings if operated with a narrow margin. Notwithstanding, evaluation of ammonia control strategies is suggested as a medium priority activity to determine the practical limits of minimizing ammonia discharges, keeping in mind a measurable residual is necessary to maintain adequate nutrients for good secondary treatment. The cost of controlling ammonia addition is estimated at less than $100,000.

3.7 MILL-WIDE OPERATIONS

3.7.1 General Operations

As previously discussed, Simpson has implemented numerous pollution prevention project, however, there are further opportunities for pollution prevention associated with general mill operations. The emission, effluent, or solid and hazardous waste reduction benefits for the following projects are variable, buy should be evaluated to determine those which are attractive from the perspective of cost-effectiveness and risk avoidance. Several ongoing and proposed operational improvements at Simpson include:

- Continue to replace PCB transformers (recommended project #21)
- Continue asbestos removal/renovation program (recommended project #22)
- Continue to increase bulk/semi-bulk purchases; eliminate drums (recommended project #23)
- Increase steam condensate recovery (recommended project #24)
- Continue to minimize miscellaneous hazardous wastes (paint wastes, solvents, etc.) (recommended project #26)
- Continue to substitute non-hazardous or less toxic materials for solvents and degreasers used in equipment maintenance, and for biocides and dyes used in paper manufacture
- Review chemical procurement practices, storage operations and chemical handling practices

3.7.2 Water Conservation (Recommended Project #25)

Reduced process water consumption is currently a high priority at Simpson. The goal is to reduce the wastewater treatment plant discharge to 20 mgd within the next year. Simpson has completed several water conservation projects including reuse of about 400 gpm (0.58 mgd) of foul condensate from the No. 4 evaporator for brownstock washing on the No. 3 brownstock washer ($100,000), partial steam condensate recovery from the paper machines, and reuse of about 2 mgd of No. 14 paper machine white water in the pulp mill. Installation of the new bleach plant resulted in discharge reductions from bleaching. Additional projects being evaluated include reuse of 500-700 gpm (0.72-1.0 mgd) of foul condensates for make-up to the No. 2 and 3 washers and deckers and as wash water on the lime mud filters; and, use of hot water on the weir showers on the pulp machines to replace fresh water. While water reduction is generally beneficial, decreased water usage will most likely result in increased wastewater temperatures necessitating increased use of bay water for temperature control, or installation of alternate cooling systems.

Water conservation, recycle, and reuse throughout the mill has been pursued as a high priority element of Simpson's pollution prevention program. Simpson has reduced water use by 40% over the last year. Current water use is approximately 22 mgd down from a high of 36 mgd during the summer of 1991. Simpson's water conservation goal is 20 mgd and the company has authorized an additional $2 million to achieve this goal in 1992.

4.0 EVALUATION OF ALTERNATIVES

4.1 COMPLETED POLLUTION PREVENTION PROJECTS

Table 4 is a summary of recent pollution prevention projects completed by Simpson. The investment cost for all projects totals nearly $80 million. Most of the major expenditures were for process or utility system upgrades that provide significant pollution prevention benefits as well as product quality benefits. For example, installation of the No. 4 brownstock washer and associated screening and deknotting systems and the new bleach plant resulted in substantial reduction in bleach plant chemical consumption, the amounts of chlorinated compounds generated, while yielding bleached pulp of higher quality suitable for a wider range of markets than would otherwise have been possible. Installation of the No. 7 power boiler resulted in significant atmospheric emission reductions and improved resource utilization through enhanced combustion efficiency.

Most of the less expensive projects were directly focused on water conservation and pollution control. In many cases cost savings have accrued to Simpson from these projects as well. Water consumption savings of 2.9 mgd from reuse of evaporator condensates results in an annual savings of about $300,000. The investment cost for that project was only $100,000.

4.2 ADDITIONAL POLLUTION PREVENTION RECOMMENDATIONS

Simpson's pollution prevention accomplishments to date reflect what can be achieved at basic industries involved in processing large amounts of raw materials. The major pollution prevention benefits will accrue as production processes and utility operations are modernized and upgraded. These projects involve investment of millions to hundreds of millions of dollars, and may result in order-of-magnitude reductions in emissions, discharges, and generation of wastes. Lower cost projects focused more directly at pollution prevention may result in significant environmental benefits, and may or may not be attractive from the standpoint of return on investment. In some cases, alternatives become attractive from a risk reduction or risk avoidance standpoint with cost being a secondary consideration. The alternatives developed for Simpson fall into all of these categories.

Table 5 is a summary of the pollution prevention alternatives identified as feasible from the opportunity assessment. The cost estimates for these projects range from several thousand dollars to several million dollars. The emission and discharge reductions, although not quantified in all cases, also span a wide range. Information presented in the table includes the project description, estimated pollution reduction benefits, approximate cost, and suggested priority for implementation.

Table 4

SIMPSON TACOMA KRAFT COMPANY
COMPLETED PROCESS IMPROVEMENTS AND POLLUTION PREVENTION PROJECTS

PROJECT	BENEFITS	CAPITAL COST
WOODYARD - CHIP HANDLING		
Chip area fencing	Minimize chip spillage to Bay	$ 265,000
Modify chip unloading	Minimize chip spillage to Bay	1,200,000
PULPING AND CHEMICAL RECOVERY		
Reuse condensate on washers	Water conservation - 2.9 mgd; Reduce BOD_5 discharges	100,000
Black liquor spill recovery	Reduce peak BOD_5 loadings	280,000
No. 4 Brownstock washer	Reduce water consumption; Reduce bleach chemicals; Improve soda loss from 70 to < 10 lbs/ton; Reduce bleach plant chemical consumption	19,000,000
Upgrade recausticizing area	Reduce fugitive dusts	10,000,000
NCG system expansion	Reduce TRS emissions	700,000
BLEACHING		
New bleach plant • Uses low salt chlorate • Average 85% ClO_2 substitution	Reduce CDDs/CDFs to non-detect limits; Reduce chloroform and chlorine emissions (93% and 97% respectively); Reduce chlorinated phenolics; Reduce AOX (5 to 1.5 lbs/ton); Reduce wastewater flow	28,000,000
ClO_2 plant chiller	Increase ClO_2 capacity; see above	1,000,000
Hydrogen peroxide extraction	Improve bleaching; use less chlorine-based chemicals	NA
PULP DRYERS AND PAPER MACHINES		
Partial steam condensate recovery	Reduce water consumption and boiler feedwater treatment	NA
Reuse No. 14 paper machine white water at pulp mill	Reduce water consumption by 2 mgd	NA
Replace wet strength resin containing formaldehyde	Eliminate formaldehyde emissions from paper mill (total mill reduction of 86%)	NA

Table 4

SIMPSON TACOMA KRAFT COMPANY
COMPLETED PROCESS IMPROVEMENTS AND POLLUTION PREVENTION PROJECTS

PROJECT	BENEFITS	CAPITAL COST
GENERAL MILL OPERATIONS		
No. 7 power boiler	Emission reductions: PM10 389 tons/year NOx 91 tons/year CO 182 tons/year Visible emissions to less than 10%	24,000,000
Stormwater collection	Benefit: Capture and treat stormwater discharges; Negative: Increase hydraulic loading on WWTP	200,000
Replacement of PCB - containing transformers*	Reduce potential for spills and fires (70% of transformers replaced)	2,000,000
Asbestos abatement program*	Reduce potential for atmospheric discharge and exposure to asbestos	5,000,000
Bulk chemical purchases to reduce drum management*	Ease of management and storage; reduced spill potential	NA
Eliminated use of chlorinated solvents	Eliminate need to manage an extremely hazardous waste	NA

* On-going project.

Table 5

SIMPSON TACOMA KRAFT COMPANY
ADDITIONAL POLLUTION PREVENTION RECOMMENDATIONS

	Project		Benefits	Estimated Cost	Proposed Priority
WOODYARD - CHIP HANDLING					
1	Fugitive dust control	M	Minimize dust emissions to St. Paul waterway and Inner Commencement Bay	Minor/Low $100,000 - 1,000,000	1
2	Stormwater control near chip unloading station	L	Minimize chip spillage to St. Paul waterway and Inner Commencement Bay	Minor < $100,000	2
3	Chip thickness screens	L	More uniform pulp quality; less bleach plant chemical consumption	Medium/High $4 - 6,000,000	3
PULPING AND CHEMICAL RECOVERY					
4	Expansion of NCG system	M	Incremental TRS reductions from smelt tanks, liquor storage tanks and filters	Medium > $1,000,000	1
5	Replace No. 2 and 3 brownstock washers	M	TRS and VOC reductions; water conservation	High $20,000,000	2
6	Black liquor spill prevention and recovery	H	TRS and VOC reductions; BOD_5 reductions; WWTP efficiency improvements; cost savings	Medium > $1,000,000	1
7	Steam stripping foul condensates or incinerating emissions in the power boiler	H	TRS and VOC reductions; water conservation	Medium/High $4 - 8,000,000	1
8	Expand mill capacity with addition of secondary fiber	H	Utilize waste material	High > $5,000,000	1
9	Replace existing batch digester kraft capacity with secondary fiber	H	Utilize waste material; replace poorly controlled kraft processes with low pollutant generating process	High $10 - 12,000,000	2

Table 5

SIMPSON TACOMA KRAFT COMPANY
ADDITIONAL POLLUTION PREVENTION RECOMMENDATIONS

	Project		Benefits	Estimated Cost	Proposed Priority
10	Exhaust smelt tank vents to No. 7 power boiler	M	Reduce TRS emissions; reduce particulate emissions	Medium > $1,000,000	2
11	Upgrade or replace No. 3 recovery boiler	H	Improve chemical recovery and mill efficiency; reduce TRS and particulate emissions	High $35 - 100,000,000	2
12	New MCC digester for bleached stock	M	More uniform pulp quality; less bleach plant chemical consumption; lower formation of chlorinated compounds	High $50,000,000	2
13	Use indirect heaters on batch digesters	M	Condensate savings and water conservation; lower hydraulic load on evaporators	Low < $1,000,000	3
14	Utilization of boiler ashes (grate ash, air heater/multiclone ash, fly ash)	H	Utilization of waste materials; reduction in landfill use; more effective use of hogged fuel; cost savings	Low < $1,000,000	1
BLEACHING					
15	Use of oxygen delignification or addition of bleaching or extraction stage	H	Reduce bleach plant chemical consumption; reduce formation of chlorinated compounds	High $15 - 20,000,000	2
16	Operate bleach plant at 100 % chlorine dioxide substitution (would require additional ClO_2 generator capacity)	M	Reduced chloroform and chlorophenols generation; produce chlorine-free pulp; better process control; eliminate chlorine handling	High; Increase in operating costs $10,000,000	2
PULP DRYERS AND PAPER MACHINES					
17	Save-alls on pulp dryers	L	Fiber recovery; water conservation	Medium > $1,000,000	3

Table 5

SIMPSON TACOMA KRAFT COMPANY
ADDITIONAL POLLUTION PREVENTION RECOMMENDATIONS

Project		Benefits		Estimated Cost	Proposed Priority
18	Improve steam condensate recovery	L	Condensate savings; energy savings; reduce hot water to sewer; minimize boiler feedwater treatment	Low < $1,000,000	2
19	Improve water conservation and reuse	L	Water conservation; reduce hydraulic and waste loading to WWTP	Low < $1,000,000	1
WASTEWATER TREATMENT					
20	Control ammonia addition to minimize effluent residual	M	Reduced effluent discharges of ammonia to Inner Commencement Bay; cost savings	Minor < $100,000	2
GENERAL MILL OPERATIONS					
21	Replace PCB transformers (ongoing)	M	Risk avoidance	Medium > $1,000,000	3
22	Asbestos removal/renovation (ongoing)	M	Risk avoidance; reduction in liability	Medium - High > $1,000,000	3
23	Increase bulk/semi-bulk purchases; eliminate drums (ongoing)	L	Risk avoidance; cost savings	Minor < $100,000	1
24	Increase steam condensate recovery	L	Condensate savings; energy savings; reduce hot water to sewer; minimize boiler feedwater treatment	Low < $1,000,000	2
25	Improve water conservation and reuse	L	Water conservation; reduce hydraulic and waste loading to WWTP	Medium > $1,000,000	1
26	Minimize miscellaneous hazardous waste	M	Risk avoidance	Minor	1

The pollution reduction benefits are described in terms of relative emission or discharge reductions ranked as low, moderate, or high. These are qualitative rankings arrived at through review and discussion among Simpson, EPA Region 10, Ecology, and the project team, taking into account the nature of the waste streams and the type of pollutants generated. While it may be possible to develop a pollutant ranking and toxicity weighing scheme to assist in determining priorities, such processes are usually unworkable in multi-media assessments, and tend to inhibit use of good engineering judgement and common sense. Hence, no attempt was made to incorporate a toxicity weighting scheme in this process.

The scope of this project precluded development of preliminary engineering cost estimates for each alternative. Where readily obtainable from Simpson or other sources, preliminary cost estimates are presented. Most cost estimates are relative order-of-magnitude approximations. The relative costs of each project are ranked as minor (< $100,000), low (< $1,000,000), medium ($1-$5,000,000), and high (> $5,000,000).

Finally, a priority ranking was assigned to each project on the basis of discussions among Simpson, EPA Region 10, the Department of Ecology, and the project team. Relative priority rankings have been coordinated to extent possible with Simpson's view of feasibility within the company's established business plans and current considerations for possible long-range mill reconfiguration. These priorities could change in the future based on new information or changes in environmental regulations.

5.0 RECOMMENDED IMPLEMENTATION PLAN

5.1 RECOMMENDED FRAMEWORK FOR ESTABLISHING A POLLUTION PREVENTION PROGRAM

Because of the rapid pace of technological improvements and Simpson's need to respond to market demands, any meaningful plan or program must be flexible and dynamic. Many pollution prevention options have been evaluated in this report and a schedule for these alternatives is offered in Section 5.2; however, Simpson will benefit most from these suggestions by establishing an internal organization that is charged with the responsibility of championing the most beneficial of these projects and the incorporation of pollution prevention into the corporate planning process, and of tracking the success of the projects that have been implemented.

Experience in various industries over the last 10 years has shown that there are four keys to successful implementation of a pollution prevention program. First is the commitment by management to make pollution prevention a priority. Second is the involvement of personnel at many levels and from all of the relevant components of the manufacturing process in an organization specifically created to establish an ongoing pollution prevention effort. Third is the identification of incentives and barriers to pollution prevention within the plant, company, and corporation. Fourth is the establishment of an effective planning tool that can incorporate changes in environmental regulations, market climate, and corporate reorganizations.

5.1.1 Management Commitment

Simpson has demonstrated its willingness to consider pollution prevention as an important element of its environmental control programs by voluntarily participating in this project, as well as by its waste reduction accomplishments to date. Additional benefits can be obtained by enhancing the process to integrate pollution prevention into routine operations. That commitment should be expressed as policy statements issued by corporate and mill management. The corporate statement may be broad and simple, such as the one adopted by E.I. DuPont in 1980 (Ref. 17): "to minimize the generation of waste to the extent that is technically and economically feasible." Or, the policy could be more specific, such as a commitment to:

> Establish an ongoing pollution prevention program to continue progress in the reduction of wastes and discharges to all environmental media; a program of employee awareness activities; a committee to address specific pollution prevention challenges, regular assessments of waste generating processes and practices; tracking of discharges and emissions, an incentive program to foster environmentally protective attitudes and innovation, and the consideration of pollution prevention benefits in every capital project proposed for funding.

5.1.2 Pollution Prevention Committee

The primary objective of a pollution prevention committee is to define or establish a successful system within the corporate framework that works to achieve the cost effective minimization of waste, and include representation and support from all the vital components of the manufacturing process. It is critical, therefore, that personnel who understand the plant's processes, and that personnel who control or influence financial decisions are resident in the committee. As part of Simpson's corporate pollution prevention initiative, committees will be formed at each facility.

The most important functions of a pollution prevention committee are to enhance awareness of pollution prevention and to identify what needs to be done. The committee is the primary arena for sharing ideas regarding pollution prevention opportunities, and is responsible for gathering and sharing information both inside and outside the mill. Internal communication will include both the identification of potential projects and sharing knowledge of anticipated costs and benefits. Communications external to the mill are important for enhancing the public image of the company as a good environmental player, and for demonstrating to other companies that pollution prevention is a viable strategy and may provide a competitive advantage.

Listed below are possible functions of a pollution prevention committee:

- Enhance awareness of pollution prevention
  - Employee training
  - In-house communications
  - External communications

- Identify pollution prevention goals, targets, and projects
  - Define objectives
  - Review objectives with management
  - Establish plans
  - Procure resources and support

- Tracking
  - Conduct audits
  - Establish accounting system
  - Summarize progress
  - Recognize achievements

5.1.2.1 Tracking

In order to measure progress and to help ensure the ongoing success of the pollution prevention program, an accounting system should be established to audit and track pollution prevention accomplishments. This system is analogous to a post-audit performed on a capital project after implementation to compare projected gains in productivity or cost reductions with actual gains or costs. In this way, the company can accumulate experience for better estimating the pollution prevention benefits of future proposed projects.

Tracking can be accomplished in a variety of ways. Initially, pollution prevention gains may be measured using the data collections systems already in place for preparing Toxics Release Inventory (TRI) data required for SARA Title III compliance. As time goes on, a tracking system that provides more project-specific detailed information may be useful. Companies including DuPont, 3M, and Dow Chemical have instituted sophisticated monitoring of in-plant flows and discharges in order to track progress in waste reduction and to pinpoint processes and areas where further improvement is needed.

Simpson is currently discussing methods for improved environmental accounting. This system is directly applicable to the evaluation of proposed capital projects and the post-audit of pollution prevention benefits from completed projects.

5.1.2.2 Pollution Prevention Awareness

Just as environmental awareness has been significantly raised over the past 20 years, so too the concepts and importance of pollution prevention can become widely known. If Simpson Tacoma is to reap the most benefits from establishing a pollution prevention program, sharing information with all of Simpson's employees is a key factor. This can be accomplished in a number of ways. Pollution prevention can be included in new employee orientation. The corporate and company policies on pollution prevention can be included in the employee handbook. Job training can incorporate pollution prevention methods such as good housekeeping and preventive maintenance.

The environmental criteria present in applicable Simpson employee performance plans could include a pollution prevention component. The environmental component of Simpson's existing incentive program could be expanded to include "beyond compliance" awards. Pollution prevention objectives could be communicated through this program, and personnel rewarded for achievement of pollution prevention milestones and development of innovative pollution prevention approaches.

The employee newsletter could be used to publicize pollution prevention concepts and to share success stories. Articles describing past projects such as the bleach plant replacement and Simpson's participation in this EPA Pollution Prevention Model Plan project would be interesting features in the newsletter.

5.1.3 Incentives and Barriers to Pollution Prevention

Identifying incentives and barriers to pollution prevention is one of the early steps in the establishment of a pollution prevention program. In some cases, this phase precedes the statement of management commitment and the formation of a pollution prevention task force. Once such a committee has been established, specific barriers can be identified and subsequently addressed, and incentives to pollution prevention can be used to illustrate the viability of proposed waste reduction alternatives.

In general, there are four basic incentives to pollution prevention:

- Potential to reduce the real costs and risks of generating and managing wastes
- Established corporate policies, procedures, and waste reduction goals
- Improvement in a company's environmental position and public image
- Compliance with legal requirements

Barriers to pollution prevention may be present within a company or inherent in the regulations. Typical barriers include:

- Attitudes about managing wastes
- Lack of upper management support for pollution prevention
- Shortage of capital
- Competing priorities
- Lack of technical personnel
- Lack of information
- Incomplete appreciation for the need to minimize waste
- Resistance to change
- Inflexible regulations that hinder innovation
- Lack of coordination between local, state, and federal agencies

The program or series of activities undertaken by a pollution prevention committee can be tailored specifically to address the barriers identified by the committee within the facility.

5.1.4 Environmental Forward Planning Process

Many corporations including Simpson Tacoma have successfully integrated environmental control operations into existing capital appropriation and budgeting processes and operating plans. Others have not. The former are most often operating in an anticipatory mode; the latter usually react to changing events and often find themselves facing compliance problems and unanticipated capital expenses. Simpson currently prepares five-year plans, performs environmental audits on a regular basis, and incorporates environmental considerations and pollution prevention into this planning process. Following is Simpson's approach for integrating pollution prevention planning into the capital planning process.

- Environmental Component of Simpson's Capital Expenditure Forecast

  On an annual basis, the facility prepares a five year capital plan that includes elements of the mill's environmental program. Environmental projects are listed in terms of those necessary to achieve and maintain compliance (usually non-discretionary); those discretionary projects that would improve compliance status or minimize potential for environmental releases (pollution prevention); and discretionary projects that would result in pollution prevention. The plan is

prepared and updated annually such that the results can be considered as part of the corporate and mill capital appropriations process. Those priority discretionary projects that are not funded are carried forward year-to-year until funded or dropped from consideration.

- Simpson Corporate Environmental Audit Program

  On a regular basis (annually or once every two years), an internal environmental audit will be conducted to assess multi-media environmental compliance status and review progress with respect to implementation of the environmental component of the capital plan, including pollution prevention projects. A response to the audit findings will be prepared by the mill in a timely manner upon receipt of the final audit report. Audit action items requiring significant capital spending or long-term study are included in the next annual update of the five year capital expenditure forecast.

This approach provides an appropriate vehicle for implementing pollution prevention projects. An example outline for environmental planning and pollution prevention implementation is provided in Appendix A.

5.2 RECOMMENDED IMPLEMENTATION SCHEDULES

Modification and upgrade of the Simpson mill is essentially a continuing and ongoing process. To provide funds to support the modifications and upgrades in the context of long range business plans and somewhat shorter business cycles that materially affect profitability and thus the availability of capital, Simpson has both long-term (5 - 10 years) and short-term (1 - 5 year) capital planning and appropriations cycles. The short-term capital spending plans are reviewed and updated quarterly and annually. The feasible process improvements and pollution prevention and waste minimization alternatives described in Chapter 2 and listed in Table 5 include projects that could be implemented within the current operating plan for the mill, and others that could be implemented as part of a strategic plan to increase production, produce higher graded products, or enter new markets. Tables 6 and 7 present subsets of the projects listed in Table 5, further classified into those that could likely be implemented during the short-term, and those that would be considered over a longer term, consistent with Simpson business plans.

Table 6 presents a recommended schedule for implementing the alternatives that fall into the first category. These are generally the lower cost options that would be implemented in the near term, within one to five years. Table 7 includes projects with longer term implementation plans that are largely dependent upon Simpson's medium to long-term business plans. It is important to note that, depending upon major process modifications that may be made to the mill, additional pollution prevention opportunities may arise and some of those suggested in this report may no longer be appropriate. Hence, this report should be viewed as a dynamic document that will be updated from

time to time as Simpson's plans for the mill are developed and implemented. It is anticipated that Simpson will develop detailed plans and schedules, and refine cost and environmental benefits estimates, as part of its annual and five year capital appropriations processes and environmental planning process.

Each of the projects listed in Tables 6 and 7 which Simpson is actively evaluating or is in the process of implementing is designated with an asterisk (*). These projects represent all of the priority one alternatives and some of the priority two options.

Table 6

SIMPSON TACOMA KRAFT COMPANY
PROPOSED IMPLEMENTATION SCHEDULE
FOR SHORT-TERM POLLUTION PREVENTION RECOMMENDATIONS

	Project	Estimated Cost	Priority	Implementation Period
1*	Fugitive dust control - chip piles (Planned for review)	Minor/Low $100,000 - 1,000,000	1	1 - 5 years
2*	Stormwater control - chip unloading (Reviewed annually)	Minor < $100,000	2	1 - 5 years
13*	Indirect heat exchangers on batch digesters (Engineering review in progress)	Low < $1,000,000	1	1 - 5 years
14*	Utilization of boiler ashes and slaker grits (Engineering review in progress)	Low < $1,000,000	1	1 - 5 years
10	Exhaust smelt tank vents to No. 7 power boiler	Medium > $1,000,000	2	1 - 5 years
4*	Expansion of NCG system (Reviewed annually)	Medium > $1,000,000	1	1 - 5 years
6*	Black liquor spill prevention and recovery (Engineering review complete)	Medium > $1,000,000	1	Ongoing
19*	Improve water conservation and reuse - paper machines/pulp dryers (Engineering review complete)	Low < $1,000,000	1	1 - 5 years
18	Improve steam condensate recovery - paper machines/pulp dryers	Low < $1,000,000	2	1 - 5 years
20	Control ammonia discharges	Minor < $100,000	2	1 - 5 years
17	Save-alls on pulp dryers	Medium > $1,000,000	3	1 - 5 years
21*	Replace PCB transformers - general mill	Low < $1,000,000	1	Ongoing

* Simpson is actively evaluating or has begun implementation of this project.

Table 6

SIMPSON TACOMA KRAFT COMPANY
PROPOSED IMPLEMENTATION SCHEDULE
FOR SHORT-TERM POLLUTION PREVENTION RECOMMENDATIONS

	Project	Estimated Cost	Priority	Implementation Period
22*	Asbestos removal/renovation - general mill	Medium - High < $1,000,000	1	Ongoing
23*	Increase bulk/semi-bulk purchases; eliminate drums - general mill	Minor < $100,000	1	Ongoing
26*	Minimize miscellaneous hazardous wastes - general mill	Minor < $100,000	1	Ongoing
24*	Improve steam condensate recovery - general mill	Low < $1,000,000	2	Ongoing
25*	Improve water conservation and reuse - general mill	Medium > $1,000,000	1	Ongoing

* Simpson is actively evaluating or has begun implementation of this project.

Table 7

SIMPSON TACOMA KRAFT COMPANY
PROPOSED IMPLEMENTATION SCHEDULE
FOR LONG-TERM POLLUTION PREVENTION RECOMMENDATIONS

	Project	Estimated Cost	Priority	Implementation Period
8*	Expand mill capacity with addition of secondary fiber (Being considered)	High > $5,000,000	2	5 - 10 years
9	Replace existing batch digester kraft capacity with addition of secondary fiber	High > $5,000,000	2	5 - 10 years
5	Replace No. 2 and 3 brownstock washers	High $20,000,000	3	5 - 10 years
11	Upgrade or replace No. 3 recovery boiler	High $100,000,000	2	5 - 10 years
12	New MCC digester for bleached stock	High $50,000,000	3	5 - 10 years
15	Expand bleach plant capacity with oxygen delignification	High $15 - 20,000,000	2	5 - 10 years
16	Operate bleach plant at sustained 100% chlorine dioxide substitution	High $10,000,000	2	5 - 10 years
3	Chip thickness screens	Medium/High $4 - 6,000,000	3	5 - 10 years
7	Steam stripping foul condensates or incineration in power boiler	Medium/High $4 - 8,000,000	2/3	5 - 10 years

* Simpson is actively evaluating or has begun implementation of this project.

6.0 REFERENCES

1. *1990 National Census of Pulp, Paper and Paperboard Manufacturing Facilities*; Simpson Tacoma Kraft Company; January 2, 1991.

2. *Toxic Chemical Release Inventory*; Simpson Tacoma Kraft Company; 1989, 1990.

3. *Technical Assistance to Pierce County Department of Economic Development for Odor Sources*; PEI Associates, Inc.; Pierce County Department of Community and Economic Development; PN 8691; Tacoma, Washington; November 1988.

4. Personal communication with Raymond C. Whittemore, Ph.D.; NCASI Northeast Regional Center; Medford, Massachusetts; February 12, 1992.

5. *Environmental Pollution Control, Pulp and Paper Industry, Part I - Air*; U.S. EPA; EPA-625/7-76-001; October 1976.

6. *Factors Affecting Emission of Odorous Reduced Sulfur Compounds from Miscellaneous Kraft Process Sources*; Atmospheric Quality Improvement Technical Bulletin No. 60; National Council of the Paper Industry for Air and Stream Improvement, Inc.; New York, New York; March 1972.

7. Smook, G.A.; Handbook for Pulp and Paper Technologists; Joint Textbook Committee of the Paper Industry; TAPPI, Technology Park, Atlanta and Canadian Pulp and Paper Association, Montreal; Seventh Printing, 1989.

8. *Characterization of Various Condensate Streams in the Kraft Process*; Stream Improvement Technical Bulletin No. 310; National Council of the Paper Industry for Air and Stream Improvement, Inc.; New York, New York; April 1978.

9. Butryn, G.L. and Ayers, K.C.; *Mead Experience in Steam Stripping Kraft Mill Condensates*; Tappi Journal; Vol. 58, No. 10; October 1975.

10. Carter, D.N. and Tench, L.; *Condensate Stripping Systems for Kraft Mills*; Pulp and Paper Magazine of Canada; Vol. 75, No. 8; August 1975.

11. *Stripping and Disposal of Contaminated Condensates*; Tappi Journal; Vol.57, No. 9; September 1974.

12. Rowbottom, R. and Wheeler, G.; *Stripping-Incineration System Cuts TRS Emissions at Cornwall*; Pulp and Paper Canada; Vol. 76, No.2; February 1975.

13. *Chemical Specific Information - SARA Section 313 Reporting*; National Council of the Paper Industry for Air and Stream Improvement, Inc.;, Gainesville, FL; March, 1989.

14. *Emission Survey Findings for Bleach Plant W10*; National Council of the Paper Industry for Air and Stream Improvement, Inc.; Undated; Attachment to *1990 National Census of Pulp, Paper and Paperboard Manufacturing Facilities*; Simpson Tacoma Kraft Company; January 2, 1991.

15. Axegard, P.; *Improvement of Bleach Plant Effluent by Cutting Back on Cl_2*; TAPPI/CPPA Proceedings, 1988 International Pulp Bleaching Conference; Orlando, Florida; June 1988.

16. Tench, L. and Harper, S.; *Oxygen Bleaching Practices and Benefits - An Overview*; TAPPI Proceedings; 1987 International Oxygen Delignification Conference.

17. Hollod, Gregory J. and Beck, William B.; *Implementing Waste Minimization Programs in Industry*, Hazardous Waste Minimization, edited by Harry M. Freeman; McGraw Hill, 1990.

18. Johnson, D. Hashimoto, S., and Mindlay, M.; *Simpson Tacoma Kraft company Operates Dioxin free with High % ClO_2 Substitution*; Proceedings, 1992 Environmental Conference; TAPPI, Technology Park, Atlanta; April 1992.

ADDITIONAL RESOURCES FOR POLLUTION PREVENTION PLANNING

Committee to Evaluate Mass Balance Information for Facilities Handling Toxic Substances; Tracking Toxic Substances at Industrial Facilities; National Academy Press, Washington, D.C., 1990.

Freeman, Harry, Editor; Hazardous Waste Minimization; McGraw-Hill Publishing Company, 1990.

General Electric Corporate Environmental Programs; *Financial Analysis of Waste Alternatives.*

Higgins, Thomas E.; Hazardous Waste Minimization Handbook; Lewis Publishers, Inc., 1989.

U.S. Environmental Protection Agency; *Facility Pollution Prevention Guide*; EPA/600/R-92/088; May 1992.

U.S. Environmental Protection Agency; *Total Cost Assessment: Accelerating Industrial Pollution Prevention through Innovative Project Financial Analysis with Applications to the Pulp and Paper Industry*; December 1991.

APPENDIX A

SAMPLE OUTLINE FOR ENVIRONMENTAL AND POLLUTION PREVENTION PLANNING

SAMPLE OUTLINE FOR ENVIRONMENTAL AND POLLUTION PREVENTION PLANNING

I. Executive Summary

II. Certifications

Certifications are provided by mill managers that company environmental policies, applicable laws and regulations, and any applicable industry trade association policies and operating practices have been adhered to. Also, a certification is made that all appropriation requests for capital expenses have had the appropriate environmental review, including pollution prevention and waste minimization. Any exceptions to the certifications are noted.

III. Programs and Issues

Each environmental program is addressed and all significant issues are reviewed in terms of impact on ongoing operations, including human and financial resource implications.

A. SARA Title III Emissions Reduction Program
B. Air Programs
C. Water Programs
D. Spill Prevention and Control
(Oil, chemicals, process solutions)
E. Solid Waste/Hazardous Waste Programs
F. Superfund
G. Groundwater Protection Program
H. PCB Elimination
I. Asbestos Remediation
J. Enforcement Issues (Fines, penalties, lawsuits)
K. Future Laws and Regulations
L. Community Concerns and Issues
M. Resource Issues

IV. Financial Implications Summary

A five year expense projection by project is made. Capital expenses are distinguished from mill expense items. The costs for multi-year projects are distributed to proposed year of expenditure.

V. Exhibits

A. Capital Expense and Appropriation Projection
B. SARA Title III Emissions Summary
(Five year summary by pollutant)
C. Waste Disposal Quantity and Cost Projections
D. Prior Year Expenditures - Projected vs. Actual
E. Offsite Waste Disposal Site Evaluation
F. Current Year Environmental Project Descriptions
(Summary project descriptions with cost, pollution prevention and waste minimization benefits)

APPENDIX B

GLOSSARY

GLOSSARY

A. Chemical Terminology, Abbreviations, Units

AOX - Adsorbable Organic Halides. A measure of the amount of halogenated organic substances in a sample of water, pulp or sludge. For the pulp and paper industry, AOX is a measure of the amount of chlorinated organic compounds present in a given sample.

BOD - Biochemical oxygen demand is a measure of biological decomposition of organic matter in a water sample. It is determined by measuring the oxygen required by microorganisms to oxidize the organic contaminants of a water sample under standard laboratory conditions. The standard conditions include incubation for five days at 20°C. BOD_5-Biochemical oxygen demand, measured after five-days.

CDDs - Chlorinated dibenzo-p-dioxins; chemical family consisting of eight homologues (monochlorinated through octchlorinated) and 75 congeners. PCDDs-Polychlorinated dibenzo-p-dioxins.

CDFs - Chlorinated dibenzofurans. Chemical family consisting of eight homologues (monochlorinated through octchlorinated) and 135 congeners. PCDFs - Polychlorinated dibenzofurans.

PCBs - Polychlorinated byphenyls. Compounds containing one or more chlorine atoms attached to a byphenyl molecule; chemical mixtures containing many different PCB congeners. PCBs typically have a heavy liquid, oil-like consistency and weigh 10 -12 lbs/gallon. PCBs are very stable, exhibit low water solubility, low vapor pressure, low flammability, high heat capacity, low electrical conductivity, have a favorable dielectric constant, and are highly persistent and toxic. PCBs intentionally manufactured were most often used as a dielectric fluid for electrical transformers and capacitors.

ppm - Parts per million (equal to milligrams per liter, mg/l, when the specific gravity is one for aqueous samples; and equal to micrograms per gram, μg/gm, for solid samples).

ppb - Parts per billion (equal to micrograms per liter, μg/l, when the specific gravity is one for aqueous samples; and equal to nanograms per gram, ng/gm, for solid samples).

ppt - Parts per trillion (equal to nanograms per liter, ng/l, when the specific gravity is one for aqeous samples); and equal to picograms per gram, pg/gm, for solid samples.

ppq - Parts per quadrillion (equal to picograms per liter, pg/l, when the specific gravityis one for aqueous samples); and equal to femtograms per gram for solid samples.

Source: Pulp and Paper Dictionary, Lavigne, John R., Miller Freeman Publication, 1986.

TRS - Total Reduced Sulfur. A combination of hydrogen sulfide (H_2S), methyl mercaptan (CH_3SH), methyl disulfide ($CH_3(SH)_2$), and dimethyl sulfide (CH_3SCH_3), and related compounds, expressed as equivalent H_2S. The characteristic odor associated with kraft mills is caused by TRS.

TSS - Total Suspended Solids. A measure of the filterable particulate matter in a waste sample.

VOCs - Volatile Organic Compounds. Organic compounds characterized by low boiling points and high vapor pressures.

B. Pulp and Paper Industry Terms

ADBSt/d - Air dry brownstock tons of pulp per day. A measure of the amount of brownstock (unbleached) pulp produced per day on an air-dried basis (about 10% moisture) as opposed to an oven dry basis (bone dry).

Active Chlorine - That portion of chlorine in chemical compounds available to do useful work in the chlorination of mill water supply and in the bleaching of pulp. (See also Available Chlorine)

Additives - Chemicals or any other materials added to pulp stock slurry to impart special physical and visual properties to the paper sheet or board made from it. (See Paper Additive)

Air Dried - Reference to pulp and paper when dried artificially with the use of heated air in appropriate type driers.

Air Dry (AD) - Refers to weight of moisture-free pulp or paper plus 10% moisture based on a traditional assumption that this amount of moisture exists when they come into equilibrium with the atmosphere, which in actuality is dependent on the conditions of the atmosphere to which it is exposed. Air-dried weight is determined by dividing the oven-dried weight by a factor of 0.9.

Alkali Extraction - The second stage in a pulp bleaching sequence where the first stage is chlorination (in which chlorine is added and allowed to react with the pulp slurry). The resulting chlorinated fiber residuals and other alkali-soluble constituents are then dissolved in the second or "alkali" extraction stage; also, caustic extraction stage, or "E"-stage.

Backwashing - The operation of cleaning a rapid sand or mechanical filter by reversing the flow of water or liquid that is being filtered.

Bark - The rind covering of stems, branches, and roots of trees and plants. Technically, all tissues of wood plants which are outside the cambium layer.

Batch Digester - A cooking vessel, usually pressurized, in which predetermined, specific amounts of wood and cooking liquors are heated so that the wood conversion to pulp is completed and removed before the cycle repeats, as opposed to a continuous digester.

Source: Pulp and Paper Dictionary, Lavigne, John R., Miller Freeman Publication, 1986.

Batch System - A pulp and paper manufacturing unit process consisting of a series of operating units which processes pre-determined specific amounts of materials and carries the process to completion before starting another cycle.

Black Liquor - Liquor from the digester to the point of its incineration in the recovery furnace of a sulfate chemical recovery process. It contains dissolved organic wood substances and residual active alkali compounds from the cook.

Black Liquor Evaporators - Multiple-effect combination of steam pressure and vacuum vessels in which black liquor is concentrated. They are arranged in such a way as to minimize the amount of steam used to carry on the process of water evaporation.

Black Liquor Recovery Boiler - A boiler designed especially to recover heat by burning concentrated black liquor (from the cooking of wood by the sulfate process) and to use the heat for steam generation.

Black Liquor Recovery Furnace - A furnace or combustion chamber especially designed to recover desirable chemicals from burning concentrated spent black liquor from the cooking of wood by the sulfate process.

Bleach - (1) A chemical used to purify and whiten pulp. It is usually of the oxidizing or reducing type, such as chlorine-based solution, oxygen, and similar chemicals. (2) The process of purifying and whitening pulp by chemically treating it to alter the coloring matter and to impart a higher brightness to the pulp.

Bleach Plant - That portion of a pulp mill where the bleaching process is performed. It usually adjoins the brownstock washing operation but sometimes is contained in a separate building. Occasionally, this are is referred to as a bleachery or the bleaching plant. It also refers to the area where hypochlorite bleach solutions are prepared.

Bleach Tower - A tall, cylindrical retention chest where pulp, mixed with the bleaching agent, is retained the required time for the bleaching action to be completed in a continuous system of pulp bleaching. An upflow-type is used when bleaching low consistency pulp, and a downflow-type is used when bleaching medium and higher consistency pulp. Also referred to as bleaching tower.

Bleach Washer - A filter (washer) located after a bleach tower in the bleaching sequence of pulp where the pulp is washed free of the residual bleaching agent and the products of the bleaching action.

Bleached Pulp - Pulp that has been purified or whitened by chemical treatment to alter coloring matter and has taken on a higher brightness characteristic.

Source: Pulp and Paper Dictionary, Lavigne, John R., Miller Freeman Publication, 1986.

Bleaching - The process of purifying and whitening pulp by chemical treatment to remove or change existing coloring material so that the pulp takes on a higher brightness characteristic. It is usually carried out in a single stage or sequence of several stages. Chlorine, peroxides, calcium hypochlorite, carbon dioxide, and, lately, oxygen are most generally used to bleach chemical pulps. For groundwood pulp, sulfur dioxide and sodium peroxide are used.

Bleaching Agent - A variety of chemicals used in the bleaching of wood pulp such as chlorine (Cl_2), sodium hypochlorite (NaOCl), calcium hypochlorite [$Ca(OCl)_2$], chlorine dioxide (ClO_2), peroxide (H_2O_2), sodium chlorite ($NaClO_2$), oxygen (O_2), and others. Also referred to as bleaching chemical.

Bleaching Stage - One of the unit process operations in which one of the bleaching chemicals is added in the sequence of a continuous system of bleaching pulp.

Caustic Extraction - A stage in the pulp bleaching sequence (E) that normally follows the chlorination stages to remove alkali-soluble, chlorinated lignins. (See Alkaline Extraction and Extraction Stage)

Causticizing - Converting green liquor to white liquor by the use of slaked lime [$Ca(OH)_2$] which reacts with the sodium carbonate (Na_2CO^3) in the green liquor to form active sodium hydroxide (NaOH) in the white liquor. Also called recausticizing.

Cellulose - The chief substance in the cell walls of plants used in pulp manufacturing. It is the fibrous substance that remains after the nonfibrous portions, such as lignin and some carbohydrates, are removed during the cooking and bleaching operations of a pulp mill.

Chemical Pulp - The mass of fibers resulting from the reduction of wood or other fibrous raw material into its component parts during the cooking phases with various chemical liquors, in such processes as sulfate, sulfite, soda, NSSC, etc.

Chemical Recovery - The recovery of chemicals in sulfate cooking liquor after it is used to cook wood in the digester (spent liquor). It is expressed as a percentage determined by dividing the total alkali to the digesters, minus the sodium sulfate added to liquor, by the total alkali in the cooking liquor going to the digester after correcting for any change in liquor inventory.

Chip Pile - Chips that are stored outside in a mound type of structure usually located near the pulp mill so that chips can be conveniently conveyed from it to the digester storage.

Chipper - A piece of equipment in the woodyard/pulp mill area used to "chip" whole logs. It consists of an enclosed, rapidly revolving disk fitted with surface-mounted knives against which the logs are dropped in an endwise direction in such a manner that they are reduced to chips, diagonally to the grain.

Chlorination - (1) The mixing and reacting of chlorine water or gas with pulp in the bleaching operation. (2) The application of chlorine to mill water supply and sewage for disinfection or oxidation of undesirable compounds.

Source: Pulp and Paper Dictionary, Lavigne, John R., Miller Freeman Publication, 1986.

Chlorination Stage - The step in a multi-stage bleaching process ("C" stage) where chlorine water or gas is mixed, allowed to react, and then washed as an initial operation in a complete pulp bleaching system.

Chlorinator - A devise for adding a chlorine-containing gas or liquid to mill wastewater. Sometimes the term is also used to refer to the chlorine mixer in the bleach plant.

Chlorine - A greenish-yellow, poisonous, gaseous chemical element (Cl_2) used in bleaching pulp and water purification in a pulp and paper mill.

Chlorine Consumption - Actual amount of chlorine consumed to bleach pulp, expressed as pounds of chlorine used per air dry ton of pulp bleached, or a percentage on the same basis. It may also be expressed on a bone dry basis.

Chlorine Dioxide Solution - A very unstable water solution of chlorine dioxide gas (ClO_2) produced in the chemical preparation area of a pulp mill. It is used in the pulp bleaching process.

Chlorine Dioxide Stage - The step or steps in a multi-stage bleaching process ("D" stages) where chlorine dioxide solution is mixed with pulp, allowed to react,, and then washed as one of the operations making up a complete pulp bleaching system.

Chlorine Evaporator - A specially constructed, thermostatically controlled vessel using hot water or steam to vaporize liquid chlorine transferred from tank cars to a pulp mill bleach plant. This vaporized product is used in the chlorination stage of a bleaching process, as well as to make up hypochlorite bleaching liquor. Also called chlorine vaporizer.

Chlorine Mixer - A mixing device used in the bleach plant to mix chlorine water or gas with unbleached pulp.

Chlorine Requirement - The amount of elemental chlorine (Cl_2) required to achieve a specified final brightness level of pulp in the bleaching process. It is supplied in the form of elemental chlorine and/or bleaching agents such as hypochlorites, chlorine dioxide, etc.

Consistency - (1) A measure of the fibrous material in pulp solutions, e.g., pulp and water, or stock (pulps and additives) and water. It is expressed as a percentage of this material in the solution, in terms of bone dry (BD), oven dry (OD), or air dry (AD) weight. (2) That property of adhesives or other coating material related to viscosity, plasticity, etc., that makes it resistant to deformation or flow.

Continuous Digester - A wood-cooking vessel in which chips are reduced to their fiber components in suitable chemicals under controlled temperature and pressure in a continuous operation.

Source: Pulp and Paper Dictionary, Lavigne, John R., Miller Freeman Publication, 1986.

Continuous Pulping Processes - Any pulping process in which the fibrous raw material and cooking chemicals move through the successive processing phases in a continuous fashion.

Countercurrent Washing - (1) Method of washing pulp by running the wash water countercurrent to the flow of pulp through the process. Examples include countercurrent intra-stage washing in a multi-stage bleaching process (to minimize effluent) and the countercurrent flow of wash water to pulp flow on vacuum-type brownstock wasters (to minimize water use and maximize black liquor recovery). (2) The washing of pulp within a Kamyr continuous digester (before blowing) in which the wash water flows countercurrent to the pulp flow in the process.

Delignification - The separation of the lignin component from the cellulose and carbohydrate materials of wood and woody materials by chemical treatment, such as the cooking of chips and the bleaching of pulp.

Dewater - (1) The tendency of solids in a slurry to aggregate and cause the draining of water from standing or flowing sludge or pulp slurry in a pipeline, sometimes to the point where the remaining solids become thick enough to make removal difficult, or to obstruct free flow through the line or a restriction such as a valve. (2) The process by which some of the water is removed from the pulp stock, increasing the consistency.

Digester - (1) A pressure vessel used to chemically treat chips and other cellulosic fibrous materials such as straw, bagasse, rages, etc., under elevated temperature and pressure in order to separate fibers from each other. It produces pulp. (2) In a waste treatment plant, it is a closed tank that decreases the volume of solids and stabilizes raw sludge by bacterial action.

DLK - Double-lined kraft cuttings, or boxboard cuttings. Cuttings produced during the manufacture of corrugated boxes. The highest quality of recyclable corrugated material.

Dye - (1) A natural or synthetic, organic or inorganic substance used to make up materials to impart a color to pulp slurries or the paper or paperboard sheet in papermaking, or to make up coating material to color their surfaces. The name is used interchangeably with the common paper mill term, dyestuff. (2) The act of coloring (or changing the color of) any material (stock, paper, etc.) by bringing it into contact with another material (dye) of a different color in such a manner that the resulting color will be more or less permanent.

EMCC - Extended modified continuous cooking. An extended delignification process developed for Kamyr continuous digesters where the furnish is subjected to modified time-temperate-alkaline cycles to produce brownstock pulp with equivalent strength and lower Kappa numbers than can be achieved with conventional Kamyr digesters. See also MCC and RDH.

Extraction Stage - That stage in a multi-stage pulp bleaching operation ("E" stage), usually following the chlorination stage, in which sodium hydroxide (NaOH) is used to remove water insoluble chlorinated lignin and other colored components not removed in an intermediate washing operation. Also referred to as the caustic stage or alkaline extraction stage.

Source: Pulp and Paper Dictionary, Lavigne, John R., Miller Freeman Publication, 1986.

First Stage - A pulp mill reference to the chlorination stage (C-stage) of a multi-stage pulp bleaching operation, which traditionally has been the first step. Recent technological developments have introduced other chemicals for use in the first step.

Free Chlorine - Elemental chlorine in the pulp bleaching process which is in solution and not compounded with lignin elements in chlorinated pulp slurries.

Green Liquor - A liquid that is formed during the sulfate chemical recovery process by dissolving smelt from the recovery furnace in a dissolving tank. The clear liquid takes on a greenish tinge.

Green Liquor Clarification - The removal of suspended solids (dregs) from green liquor, prior to causticizing in a pulp mill, by settling it in any one of several types of sedimentation units after flocculation.

High Density Storage - The storage of pulp slurries in a high consistency condition, usually after the bleaching process and just prior to the stock preparation.

High Temperature Bleaching - Operating the bleaching stages (hypochlorite or chlorine dioxide) of a multi-stage pulp bleaching system at temperatures (usually 110°F) than considered conventional (less than 80°F).

Hog Fuel - Raw bark, wood waste, and other extraneous materials which are pulverized and used as a fuel for power boilers in a mill.

Hydrated Line ($CaOH_2$) - Partially slaked lime produced by adding water to lime (Ca0).

Hypochlorite Stage - The step or steps ("H"-stages) in a multi-stage bleaching process in which hypochlorite bleaching chemicals (usually calcium or sodium hypochlorite) are mixed, allowed to react, and washed.

K Number - A value, also called permanganate number, which is the result of a laboratory test for indirectly indicating the lignin content, relative hardness, and bleachability of pulps usually having lignin contents below 6 percent. It is determined by the number of milliliters of tenth normal permanganate solution (0.1 $KMnO_4$) which is absorbed by 1 gram of oven dry pulp under specified conditions.

Kappa Number - A value obtained by a laboratory test procedure for indirectly indicating the lignin content, relative hardness, or bleachability of higher lignin content pulps, usually with yields of 70 percent or more. It is determined by the number of milliliters of tenth normal permanganate solution (0.1 $KMnO_4$) which is absorbed by 1 gram of oven dry pulp under specified conditions, and is then corrected to 50 percent consumption of permanganate.

Source: Pulp and Paper Dictionary, Lavigne, John R., Miller Freeman Publication, 1986.

Kraft Process - The sulfate chemical pulping process. Also any equipment used as well as any intermediate or final products derived from the process. It means "strength" in German, and is a common pulp mill name for the sulfate process.

Kraft Cooking Liquor - A chemical mixture consisting primarily of sodium hydroxide (NaOH) and sodium sulfide (Na_2S). It is used to cook wood chips and convert them into wood pulp. Sometimes called sulfate cooking liquor.

Kraft Digester - A pulpwood cooking vessel in which sulfate cooking liquor, consisting of sodium hydroxide (NaOH) and sodium sulfide (NA_2S) active chemicals, is used as the cooking medium.

Kraft Paper - High-strength paper made from sulfate pulp. If is usually made with a naturally brown color using unbleached pulp, but it can also be made of bleached pulp and dyed to other colors. Also known as sulfate paper.

Kraft Pulp - Wood pulp produced by the sulfate chemical process using cooking liquor. It is made up primarily of sodium hydroxide (NaOH) and sodium sulfide (Na_2S), using basically softwood species of pulpwood. Also known as sulfate pulp.

Kraft Pulping Liquor - A cooking chemical solution made up of sodium-based chemicals such as NaOH, Na_2S, Na_2CO_3, and $Na_2S_2O_3$.

Kraft Recovery Cycle - The series of unit processes in a sulfate pulp mill in which the spent cooking liquor is separated from the pulp by washing, concentrated by evaporation, supplemented to make up for lost chemicals, and burned to recover other chemicals. These recovered chemicals are converted to new cooking liquor by reacting them with fresh and recovered lime in a causticizing operation.

Lignin - A brown-colored organic substance which acts as an interfiber bond in wood materials. It is chemically separated during the cooking process to release the cellulose fibers to form pulp, and is removed along with other organic materials in the spent cooking liquor during subsequent washing and bleaching stages.

Lime (CaO) - A pulp mill chemical obtained by burning limestone ($CaCo_3$) and used to prepare cooking and bleaching liquors. It is also used in causticizing sulfate and soda cooking liquors, and to make up milk of lime [$Ca(OH)_2$] for the sulfite cooking process. See also Limestone.

Lime Kiln - A refractory lines, open-end, inclined steel cylinder located in the lime recovery area of a pulp mill and mounted on rollers. It is rotated about its longitudinal axis as lime mud ($CaCO_3$) is fed in the higher end, and burned to form lime (CaO) as it travels to the lower discharge end.

Lime Milk - The calcium hydroxide [$Ca(OH)_2$] formed by the reaction of lime (CaO) with water H_2O).

Source: Pulp and Paper Dictionary, Lavigne, John R., Miller Freeman Publication, 1986.

Lime Mud - The sludge which is primarily calcium carbonate ($CaCO_3$) that settles out and is separated from the white liquor during the clarification operation in the causticizing process in a pulp mill recovery cycle prior to pumping over to the lime recovery area. Also called white mud.

Limestone ($CaCO_3$) - A naturally occurring mineral which is heated to form lime. It is used by pulp mills in preparing cooking and bleaching liquors, causticizing of sulfate and soda cooking liquors, and other uses. See also Lime.

MCC - Modified continuous cooking. An extended delignification process developed for Kamyr continuous digesters where the furnish is subjected to modified time-temperate-alkaline cycles to produce brownstock pulp with equivalent strength and lower Kappa numbers than can be achieved with conventional Kamyr digesters. See also EMCC and RDH.

Medium Consistency - A generalized reference used to describe pulp slurries having consistencies within the approximate range of 6 to 15 percent, although it may vary somewhat depending on where in the pulp and papermaking process the reference is made.

Multistage Bleaching - Any pulp-bleaching process consisting of two or more stages of operation in continuous series, rather than in one single step.

NCG - Non-condensible gas. The gas remaining after turpentine recovery from digester gas. Typically NCG contains high concentrations of TRS.

OCC - Old corrugated containers. The most widely used grade of recycled fiber consisting principally of used cardboard boxes.

OMT/day - Off-the-machine tons/day. A measure of paper or pulp production representing the actual tonnage produced on a daily basis. Off the machine tons includes the total weight of the paper or pulp produced including all fillers and additives.

ONP - Old newsprint. Used newspapers. A principal source of fiber for secondary fiber mills.

Oven Dry (OD) - Moisture-free conditions of pulp and paper and other materials used in the pulp and paper industry. It is usually determined by drying a known sample to a constant weight in a completely dry atmosphere at a temperature of 100°C to 105°C (212°F to 221°F). Also called bone dry (BD).

Paper Machine - The primary machine in a paper mill on which slurries containing fibers and other constituents are formed into a sheet by the drainage of water, pressing, drying, winding into rolls, and sometimes coating.

Source: Pulp and Paper Dictionary, Lavigne, John R., Miller Freeman Publication, 1986.

Paper Mill - A factory or plant location where various pulps in slurry form are mechanically treated, mixed with the proper dyes, additives, and chemicals, and converted into a sheet of paper by the processes of drainage, formation, and drying on a paper machine. Some paper mills also finish the paper in various ways.

Permanganate Number - A value, also known as K number, that indicates the relative hardness or bleachability of chemical pulp usually having lignin contents below 6 percent. It is determined by the number of milliliters of one-tenth normal potassium permanganate solution ($KMnO_4$) that is absorbed by 1 gram of oven dry pulp under specified and carefully controlled conditions.

Peroxide - A short name for sodium peroxide (Na_2O_2) or hydrogen peroxide (H_2O_2) which are used to make up bleach liquor for bleaching mechanical-type pulps.

Peroxide Bleaching Stage - A sodium or hydrogen peroxide bleaching step or steps ("P"-stages) sometimes used in the later part of the multi-stage chemical-bleaching sequence as one of the operations making up the complete pulp-bleaching system.

Process Water - Any water in a pulp and paper mill that is used to dilute, wash, or carry raw materials, pulp, and any other materials used in the process of making pulp and paper.

Pulp - A fibrous material produced by mechanically or chemically reducing woody plants into their components parts from which pulp, paper, and paperboard sheets are formed after proper slushing and treatment, or used for dissolving purposes (dissolving pulp or chemical cellulose) to make rayon, plastics, and other synthetic products. Sometimes called wood pulp.

Pulp Bleaching - The process of purifying and whitening pulp in a pulp mill by chemically treating it to alter the coloring matter and to impart a higher brightness to the pulp.

Pulp Cooking - The process of reacting fiber-containing materials with suitable chemicals, usually under high temperature and pressure, in order to reduce them into their component parts with the fiber portion separated in the form of pulp. More commonly known as pulping.

Pulp Mill - A plant in which pulp is mechanically or chemically produced from fibrous materials such as woody plants, together with other associated processes such as pulp washing and bleaching. Chemical preparation and cooking chemical recovery operations are also conducted there.

Pulp Washer - A piece of pulp mill equipment designed to separate soluble, undesirable components in a pulp slurry from the acceptable fibers, usually by some type of screening method combined with diffusion and displacement with wash liquids, utilizing vacuum or the natural force of gravity.

Pulping Processes - Processes for converting fibrous raw material into pulp. They are usually classified by either the nature or degree of the chemical and/or mechanical treatments used in the pulping action.

Source: Pulp and Paper Dictionary, Lavigne, John R., Miller Freeman Publication, 1986.

RDH - Rapid displacement heating. An extended delignification process for batch digesters where the furnish is subjected to modified time-temperate-alkaline cycles to produce brownstock pulp with equivalent strength and lower Kappa numbers than can be achieved with conventional batch digesters. See also EMCC and MCC.

Recovery Boiler - A combination unit in a pulp mill used to recover the spent chemicals from cooking liquor and to produce steam.

Recovery Furnace - The unit in a sulfate pulp mill in which concentrated spent cooking liquor (black liquor) is burnt to a smelt to recover inorganic sodium salts and to generate steam.

Recovery Plant - The area, building, or buildings where all of the process units considered to be included in the chemical recovery cycle of a pulp mill are located.

Rosin - A material made up of a suspension and used for internal sizing of paper and paperboard. It is obtained as a residue from the distillation of gum from resinous southern pines. Sometimes called colophony.

Rosin Size - Rosin made up as a suspension and used for internal sizing of paper and paperboard to enhance its ability to repel moisture and water.

Salt Cake - A form of natural sodium sulfate (Na_2SO_4) added to the thick black liquor just prior to incineration in a sulfate recovery furnace where it is converted to sodium sulfide (Na_2s) to provide one of the active chemicals in the subsequent makeup of raw cooking liquor in the sulfate pulping process. Also referred to as glauber's salt.

Seal Tank - A receiving tank located beneath vacuum-type washers and filters. The water drops into it through a pipeline and forms a seal to create a vacuum in the sheet-forming cylinder portion of the unit. Sometimes referred to as a seal pit.

Sediment - Any material that settles out of pulp slurries, liquid solution, treated water, wastewater, and other fluids.

Semibleached Kraft (SBK) - Pulp made by the sulfate process which has not been bleached to the extent that normally fully bleached pulp has. It is used to make up end products considered of lower quality.

Showers - Water jets or sprays used throughout pulp and paper mills to wash wire mesh screens, wires, wet felts, and pulp pads on paper machines, cylindrical-type washers, pulp screens, pulp drainers, etc.

Source: Pulp and Paper Dictionary, Lavigne, John R., Miller Freeman Publication, 1986.

Slaking/Causticizing - A two-stage chemical process in the causticizing plant of an alkaline pup mill in which the sodium carbonate (Na_2CO_3) in the green liquor is converted to sodium hydroxide (NaOH) to produce white liquor. The first stage is slaking, which consists of the addition of lime (CaO) to green liquor where it reacts with water to form calcium hydroxide [$Ca(OH)_2$]. The second stage is causticizing, in which the calcium hydroxide reacts with the sodium carbonate to form sodium hydroxide. Both stages overlap.

Sodium Hydroxide (NaOH) - A strong alkali-type chemical used in making up cooking liquor in alkaline pulp mills. It is commonly referred to in the mill as caustic, caustic soda, or lye.

Sodium Hypochlorite (NaOCl) - A chemical used as one of the bleaching agents in multi-stage pulp mill bleach plants.

Softwood - Wood obtained from evergreen, cone-bearing species of trees, such as the pines, spruces, hemlocks, etc., which are characterized by having needles.

Softwood Pulp - Pulp produced from the wood of evergreen coniferous species of trees, such as pines, spruces, hemlocks, etc.

Spent Liquor (SL) - Used cooking liquor in a chemical pulp mill which is separated from the pulp after the cooking process. It contains the lignins, resins, carbohydrates, and other extracted substances from the material being cooked. Usually, this liquor is processed through a recovery cycle to produce fresh cooking liquor and steam for process use and/or power generation.

Sulfate Process - An alkaline pulp manufacturing process in which the active components of the liquor used in cooking chips in a pressurized vessel are primarily sodium sulfide (Na_2S) and sodium hydroxide ((NaOH) with sodium sulfate (Na_2SO_4) and lime (CaO) being used to replenish these chemicals in recovery operations. Sometimes referred to as the kraft process.

Sulfate Pulp - Fibrous material used in pulp, paper, and paperboard manufacture, produced by chemically reducing wood chips into their component parts by cooking in a vessel under pressure using an alkaline cooking liquor. This liquor consists primarily of sodium sulfide (Na_2S) and sodium hydroxide (NaOH). Also referred to as kraft pulp.

Unbleached Pulp - Pulp that has not been treated in a bleaching process and can be used as is in inferior grades of paper and paperboard.

Washer - Pulp mill equipment designed to separate soluble, undesirable components in a pulp slurry from the acceptable fibers. It usually consists of some type of screening method combined with diffusion and displacement with wash liquid, utilizing vacuum, or the natural force of gravity.

Water Supply - The primary source of natural water used in pulp and paper mill, such as streams, rivers, lakes, and wells.

Source: Pulp and Paper Dictionary, Lavigne, John R., Miller Freeman Publication, 1986.

White Liquor - Cooking liquor formed by refortifying green liquor in the causticizing operation of an alkaline-type pulp mill so that it contains the active chemicals that will reduce chips into their fiber components by dissolving the lignin cementing material during the digester operation, thereby producing pulp.

White Liquor Clarification - The removal of calcium carbonate ($CaCO_3$) and other impurities form the causticizing liquor, usually by gravity sedimentation in units called clarifiers. This takes place in the liquor recausticizing process of a pulp mill in order to obtain a clear liquor for cooking wood.

White Water - Mill waters which have a white, cloudy appearance due to a very fine dispersion of fibers picked up when separated from pulp suspension on paper machines, washers, thickeners, save-alls, and other pulp-filtering equipment. It may also contain fine suspensions of sizing, dyestuffs, and filling materials, and it is reused in the papermaking process or it is refiltered to reclaim the suspended fibers.

Wood - That part of the stem of a plant, located between the bark and the pith, which is one of the primary sources for fiber used in the manufacture of pulp and paper.

C. Utilities and Wastewater Treatment

Activated Sludge - The settled solids after treatment of pulp and paper mill effluent by aeration with micro-organisms. The solids are collected at the bottom of a clarifier tank after mixing with oxygen in an aeration tank. Part of the sludge is recycled back to the aeration tack to maintain high solids concentrations and efficient treatment.

Activated Sludge Process - The treatment of pulp and paper mill effluent with air to oxygenate the biological mass. See Activated Sludge.

Aerated Lagoon - A natural or artificial wastewater treatment pond in which mechanical or diffused-air aeration is used to supplement the oxygen supply.

Biological Effluent Treatment - Process in which living micro-organisms are mixed with incoming wastewater to a paper mill wastewater treatment plant, and use the biologically degradable organics in waste as food-stuffs or an energy source, thus effectively removing them from applied wastewater.

Biological Oxidation - Breaking down (oxidizing) organic carbon by bacteria that utilize free dissolved oxygen (aerobic) or "chemically bound" oxygen (anaerobic).

Boiler - Broad or general term for a steam-generating unit. It is referred to as an industrial boiler when primarily used to generate steam for process requirements such as in a pulp and paper mill, or as a recovery boiler when used in the chemical recovery cycle of a pulp mill.

Source: Pulp and Paper Dictionary, Lavigne, John R., Miller Freeman Publication, 1986.

Boiler Blowdown - Periodic or continuous drains from the drum and/or waterwall headers to remove spent precipitated feedwater treatment chemicals from the unit.

Clarification - (1) The removal of turbidity and suspended solids by settling in mill wastewater treatment. (2) In the causticizing plant in a pulp mill, it refers to the settling out of suspended materials from green and white liquors.

Clarifiers - Storage tanks in which suspended solids are allowed to settle and be removed from green and white liquors in the causticizing areas of a pulp mill. Tank used in wastewater treatment for separation of settleable solids.

Effluent - Pulp or paper mill wastewater discharges to receiving waters including streams, lakes, and other bodies of water.

Fly Ash - Entrained, partially burned dust, soot, and other materials and chemicals that are carried over with the flue gases emitted from the smoke stacks of power and recovery furnaces.

gpm -Gallon per minute.

Influent - Mill wastes, water, and other liquids, which can be raw or partially treated, flowing into a treatment plant, reservoir, basin, or holding pond.

Leachate - Liquid containing dissolved chemicals picked up by flowing the liquid through a material, such as water through the contents of a landfill.

MGD - Million gallons per day.

MLSS - Mixed-liquor suspended solids.

MLVSS - Mixed-liquor volatile suspended solids.

Outfall - The mouth of conduit drains and other conduits from which a mill effluent discharges into receiving waters.

Primary Sludge - The settlings removed from the first stage of a wastewater treatment plant which consists of a sludge settling tank. The sludge is normally dried over vacuum filters and disposed of in landfills or dried and burned in the power furnace.

Primary Treatment - The removal of suspended matter from mill wastewater by sedimentation. It is usually the first stage in a multistage wastewater treatment process, where substantially all floating or settleable solids are mechanically removed by screening and sedimentation.

Source: Pulp and Paper Dictionary, Lavigne, John R., Miller Freeman Publication, 1986.

Secondary Wastewater Treatment - Biological treatment of some pulp and paper mill effluents after sedimentation in a primary wastewater treatment plant.

Sedimentation - The settling of suspended solids from pulp slurries, liquid solutions, treated water, wastewater, and other fluids. It is usually accomplished by reducing the velocity of the liquid below the point where it can transport the suspended material.

Sedimentation Basin - A large container in which wastewater is retained so that any suspended solids will settle by gravity and then can be removed.

Sludge - Solid material filtered out of mill wastewater which is either disposed of in landfill operations or burned in power boilers.

Vacuum Filter - Any type of slurry filter in which suction is employed to deposit and form a pad of solids on the surface of a separating material (screen) with the liquid flowing through it.

Wastewater - Water carrying waste materials from a mill. It is a mixture of water, chemicals, and dissolved or suspended solids.

Water Softener - Apparatus designed to remove the dissolved calcium and magnesium minerals that produce hardness from water to prevent scaling in power and recovery boilers.

Water Treatment - The processing of mill source waters from rivers, lakes, and streams to remove impurities by sedimentation, filtration, and the addition of chemicals including alum,sodium carbonate and chlorine.

Source: Pulp and Paper Dictionary, Lavigne, John R., Miller Freeman Publication, 1986.

APPENDIX C

SIMPSON MILL TRIALS
CHLORINE DIOXIDE SUBSTITUTION

Excerpted from: Johnson, D., Hashimoto, S., and Mindlay, M., *Simpson Tacoma Kraft Company Operates Dioxin Free With High % ClO_2 Substitution;* Proceedings, 1992 Environmental Conference; TAPPI, Technology Park, Atlanta; April 1992.

Responding to environmental and market concerns, Simpson pursued replacing molecular chlorine (Cl_2) with chlorine dioxide (ClO_2) in the first bleaching stage of its three stage bleach plant to reduce formation of 2,3,7,8-TCDD and 2,3,7,8-TCDF and other chlorinated organics. Various levels of ClO_2 were tried, ranging from 15 to 100%. Figure C-1 is a schematic diagram of the bleach plant showing the bleaching towers, washers, chemical addition points and routing and recycling of bleach plant filtrates. Tables C-1 through C-4 of this appendix provide the results of the trials. The conclusions are presented below:

1. High ClO_2 (50% +) in the first bleach stage significantly reduced AOX and 2,3,7,8-TCDD/TCDF in the effluent and 2,3,7,8-TCDD/TCDF in the pulp.

2. At AOX of 1.5 kg/ADMT in the effluent, after secondary treatment, the mill essentially operated dioxin (2,3,7,8-TCDD/TCDF) free. This result was achieved by running at 85% ClO_2, which is equivalent to operating at a molecular chlorine multiple of less than 0.05.

3. Peroxide (H_2O_2) added to the E_o stage reduced the charge factor in the D_C stage, which lowered the amount of elemental chlorine applied to this stage. This should have resulted in less AOX in the effluent, but it did not. Optimization of the brownstock washer and other mill modifications are expected to resolve this apparent inconsistency.

4. When operating at 100% ClO_2, 1 lb of H_2O_2 in the E_o stage displaced 1.2 lbs of ClO_2 for the entire bleach plant. When H_2O_2 was added to 100% ClO_2 runs, the market pulp brightness was achieved and the bleach plant was more stable during upset conditions.

5. The SVP-LITE™ ClO_2 process used at Simpson Tacoma produces a ClO_2 solution with minimal Cl_2, resulting in about 50% less AOX in the effluent after secondary treatment than attainable with the conventional process for 100% ClO_2 substitution.

6. Finished pulp properties of brightness, strength, and cleanliness were essentially unchanged when replacing high amounts of Cl_2 in the D_C stage with ClO_2.

7. The cost for operating from 15 - 50% ClO_2 was the same, and increased about 50% ClO_2. To operate dioxin free (85% ClO_2) with H_2O_2, the actual cost was 65% more than the reference, while the operating cost after optimization should be 30% higher. To operate Cl_2 free (100% ClO_2 with H_2O_2), the actual cost was 56% more than the 15% ClO_2 runs, while the predicted cost is about 42% higher. For a five stage bleach plant, the bleaching cost would be less than with a three stage bleach plant since the bleaching is distributed over five stages rather than three.

Next Steps

Simpson's progress in AOX and dioxin (2,3,7,8-TCDD/TCDF) reduction has resulted in a wastewater discharge permit (NPDES) based upon maintaining a target substitution level of 85% ClO_2 and monitoring AOX and dioxin levels for the next two years. The bleach plant has operated dioxin-free since the high substitution trials in June of 1990 at 85% ClO_2 with H_2O_2 in the E_o stage. Cl_2 free market pulp runs have been made, achieving pulp brightness in excess of 88% GE while using H_2O_2. Simpson's next step is to make extended runs as a Cl_2 free mill. This will be possible once the new brownstock washing system is fully operational. Then the Tacoma mill will be poised to meet both future environmental legislation and future market demands.

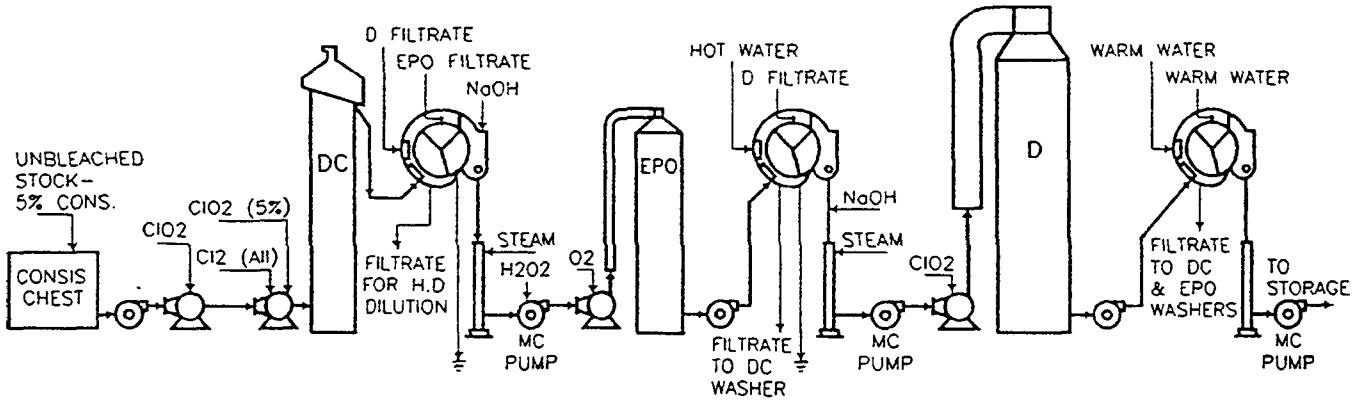

Figure C-1
SIMPSON TACOMA BLEACH PLANT FLOW DIAGRAM

Table C-1
AOX & 2,3,7,8-TCDD/F RESULTS FOR EACH LEVEL OF CLO_2 SUBSTITUTION

BLEACHING SEQUENCE	AOX kg per ADMT (bl.) [1]	DIOXIN DATA (2,3,7,8-TCDD)							FURAN DATA (2,3,7,8-TCDF)						
		B.P. ACID SEWER (ppq)	B.P. ALKAL. SEWER (ppq)	D WASHER PULP (ppt)	PULP MACH. (ppt)	PAPER MACH. (ppt)	SEC. TREAT. [2] (ppq)	SLUDGE [3] (ppt)	B.P. ACID SEWER (ppq)	B.P. ALKAL. SEWER (ppq)	D WASHER PULP (ppt)	PULP MACH. (ppt)	PAPER MACH. (ppt)	SEC. TREAT. [2] (ppq)	SLUDGE [3] (ppt)
WITHOUT H2O2															
(C85+D15)(EO)D	5.20	77.0	450.0	26.0	–	–	–	–	780.0	4.200	318.0	–	–	–	–
(D30C70)(EO)D	3.50	40.0	400.0	14.0	–	–	–	–	270.0	1.600	53.0	–	–	–	–
(D40C60)(EO)D	3.80	48.0	490.0	13.0	–	–	13.0	–	160.0	1.300	42.0	–	–	51.0	–
(D50C50)(EO)D	2.90	45.5	300.0	8.05	12.0	11.0	13.0	110.0	131.0	675.0	21.5	41.0	40.0	41.5	150.0
(D75C25)(EO)D	2.30	17.4	41.5	*2.05	0.49	0.67	ND	19.7	*8.6	*26.0	*1.06	0.60	1.18	11.9	55.3
D100(EO)D	0.60	ND	ND	ND	–	ND	*7.9	19.5	ND	5.70	ND	–	0.25	17.0	71.0
WITH H2O2															
(D75C25)(EPO)D	2.26	14.1	28.0	*1.20	–	*2.3	*9.0	19.5	16.5	29.5	3.9	–	*14.2	*28.0	59.5
(D85C15)(EPO)D	1.26	*13.0	ND	ND	ND	ND	ND	4.6	ND	*8.2	ND	ND	1.55	16.0	34.0
D100(EPO)D	0.61	ND	ND	ND	ND	ND	6.0	7.0	*6.8	ND	ND	ND	ND	25.7	38.3

[1] – In effluent after secondary treatment. AOX measurement was performed on decantant only according to Standard Methods for the Examination of Water and Wastewater. 16th Edition. Method 506 "Organic Halogen (Total) Adsorption–Pyrolysis–Titrimetric Method (Tentative)". Microcolumn (4a) Method.
[2] – In effluent after secondary treatment.
[3] – Primary & secondary sludge burned in a hog fuel boiler: estimated at 30 TPD & at 40 % solids.

** – At least one of the collected samples was determined to be nondetectable (ND).*

B.P. = Bleach Plant

Table C-2
KEY BLEACHING CONDITIONS FOR VARIOUS LEVELS OF CLO_2 SUBSTITUTION

BLEACHING SEQUENCE	NO. DAYS	PROD'N RATE ADMT/D unbl.	KAPPA NO.	SODA LOSS kgs Na2SO4 per ADMT	DC STAGE			E STAGE			D STAGE	
					TEMP. deg. C	FINAL pH	RET'N (MIN.)	TEMP. deg. C	VAT pH	CE K NO.	TEMP. deg. C	FINAL pH
WITHOUT H2O2												
(C85+D15)(EO)D	35.0	440	28.5	30.4	53.9	–	31.0	74.4	10.5	2.5	73.9	3.4
(D30C70)(EO)D	2.0	402	29.4	–	54.4	–	34.3	73.9	10.5	3.0	76.7	4.4
(D40C60)(EO)D	2.0	468	30.7	–	53.8	–	29.0	71.2	9.8	2.4	73.9	4.3
(D50C50)(EO)D	38.0	322	30.3	18.6	54.3	–	50.7	70.7	8.1	–	74.4	2.5
(D75C25)(EO)D	10.0	369	31.2	10.4	53.3	–	46.6	71.1	8.6	2.7	76.7	2.4
D100(EO)D	6.0	259	22.8	23.9	56.7	2.5	68.0	74.1	8.5	2.2	77.8	2.4
WITH H2O2												
(D75C25)(EPO)D	2.0	482	26.0	–	54.4	–	40.4	76.7	10.1	–	75.0	3.2
(D85C15)(EPO)D	25.0	384	24.6	16.5	54.4	–	50.9	73.0	9.8	3.0	75.0	2.3
D100(EPO)D	22.0	301	26.0	13.8	56.5	2.6	60.5	76.0	10.5	3.0	75.6	2.5

Table C-3
CHEMICAL CHARGES AND RELATIVE BLEACHING COSTS FOR VARIOUS LEVELS OF CLO_2 SUBSTITUTION

BLEACHING SEQUENCE	DC STAGE kg/ADMT,bl		MOLEC. CL2 MULT.	CHARGE FACTOR	E STAGE kg/ADMT,bl			D STAGE kg/ADMT,bl		TOTAL CHARGE FACTOR	ACTUAL RELATIVE BLEACH COST	PREDICTED RELATIVE BLEACH COST
	Cl2	ClO2		[1]	NaOH	O2	H2O2	ClO2	NaOH	[1]	[2]	[3]
WITHOUT H2O2												
(C85+D15)(EO)D	65.0	4.6	0.253	2.49	42.9	10.8	0.0	11.1	4.5	3.43	1.00	1.00
(D30C70)(EO)D	47.6	7.9	0.181	2.16	43.3	10.9	0.0	11.5	5.0	3.10	1.00	–
(D40C60)(EO)D	45.7	11.8	0.165	2.29	36.3	2.0	0.0	14.2	4.6	3.42	1.11	–
(D50C50)(EO)D	43.7	16.6	0.160	2.65	23.1	10.7	0.0	9.2	4.0	3.38	1.11	1.06
(D75C25)(EO)D	24.0	27.0	0.086	2.80	19.5	10.9	0.0	9.5	3.7	3.54	1.25	1.21
D100(EO)D	0.0	33.1	0.000	3.51	12.2	10.9	0.0	12.3	5.3	4.82	1.78	1.38
WITH H2O2												
(D75C25)(EPO)D	15.6	18.2	0.067	2.25	27.0	5.4	8.2	7.2	0.4	2.92	1.31	1.26
(D85C15)(EPO)D	11.6	26.0	0.052	2.67	25.1	7.1	8.2	9.6	1.8	3.61	1.65	1.30
D100(EPO)D	0.0	26.8	0.000	2.50	23.6	9.5	10.8	10.4	2.3	3.47	1.56	1.42

[1] – Charge factor units => kg. of active Cl2/ADMT,unbl. per brownstock kappa no.
[2] – Corrected for kappa no. variations, caustic and H2O2 application on the EO stage.
[3] – Corrected for kappa no. variations, caustic & H2O2 addition to the EO stage, and ClO2 in the final stage.

Table C-4
PULP QUALITY FOR VARIOUS LEVELS OF CLO_2 SUBSTITUTION

BLEACHING SEQUENCE	FINAL BR. % GE	BR. REV.	DIRT CT. ct./gm.	FINAL VISC. cps	BURST FACT.	TEAR FACT.	BR. LGT. km
WITHOUT H2O2							
(C85+D15)(EO)D	87.2	3.5	1.0	18.7	81.1	123.3	10.1
(D30C70)(EO)D	87.9	–	–	18.7	–	–	–
(D40C60)(EO)D	86.9	–	–	18.9	–	–	–
(D50C50)(EO)D	87.5	3.4	1.0	19.0	79.7	132.9	10.5
(D75C25)(EO)D	87.6	2.6	0.4	20.8	80.3	136.0	9.6
D100(EO)D	86.1	2.9	0.0	19.5	81.6	111.4	10.4
WITH H2O2							
(D75C25)(EPO)D	86.6	–	–	–	–	–	–
(D85C15)(EPO)D	88.8	2.5	0.8	14.9	75.4	115.7	10.0
D100(EPO)D	87.0	2.9	0.5	16.5	80.0	125.8	9.6

FINAL BR. = Final brightness (% GE scale)
BR. REF. = Brightness reversion
DIRT CT. = Dirt count
FINAL VISC. = Final viscosity
BURST FACT. = Burst factor (puncture resistance)