C H A M P

Community Health Air Monitoring Program

A Program of Monitoring Human Exposure for
Health Effects Research to Develop
Short and Long-Term Standards

Ferris B. Benson
Steven M. Bromberg
Robert Burton
Thomas Hauser

Environmental Exposure Section
Community Research Branch
Division of Effects Research
Bureau of Air Pollution Sciences
Office of Research and Monitoring
Environmental Protection Agency

August 18, 1971

Introduction

For the last decade the federal air monitoring effort has focused on providing data from a single central city station for comparisons between communities, and for describing annual trends. Sampling frequency was usually twenty-six random selected days out of a 365-day-year. The methodology employed involved integrating the sample for twenty-four hours or longer. The attached briefing document details the environmental monitoring program and health effects studies needed to establish defensible short-term air quality standards.

Other monitoring efforts have also focused on population health effects studies. These studies require that monitoring points be located so that the resulting data represent the population group under study. The monitoring stations are therefore established in the center of small well-defined residential areas within a community. Data correlations are made between observed health effects and observed air quality exposure. Sampling frequency and methodology employed for these studies have been designed to provide twenty-four integrated data taken on an "every day" basis (7 days/wk or 365 days/yr). The results of these studies provide valuable information for the development of criteria for long-term standards, i.e. for times longer than twenty-four hours.

An integrated twenty-four hour sample does not provide peak or diurnal information for environmental health studies. It is known that early morning inversion conditions exist in most communities and concomitant pollutant concentration peaks may be most important in causing health disorders. Both diurnal patterns which have been well-documented and fumigation peaks from point emission sources exist, by design, in the selected CHESS areas and provide the opportunity for obtaining the health data needed for defensible short-term air quality standards (Page 1). Note: Page numbers given in this text refer to the attached briefing document.

CHESS Health Indicators

The present CHESS program includes health indicators for determining short-term exposure effects. Active indicators include panel studies of symptom frequency and severity involving asthmatics, elderly cardiacs, elderly bronchitics, well elderly and families with school children. Other planned "short-term" health indicators are listed on page 2. Health indicators for long-term standards have been previously discussed in a CHESS overview paper.

Exposure Monitoring (Present CHESS Operations)

Present CHESS program monitoring efforts and a comparison between monitoring programs with respect to variables sampled, sampling frequencies, sample averaging times are illustrated on pages 4, 5 and 6. The time restraints to final output of validated data from all CHESS areas produce a lag of approximately 35-40 days for usable data (Page 7). A total of 24 man-years/year is required to operate the present CHESS monitoring program (Page 8).

CHAMP Exposure Monitoring

The proposed CHAMP monitoring operations are illustrated on pages 9 and 10 which details the variables sampled and sampling frequencies for the various pollutants compared to the other federal programs mentioned above.

The present CHESS program is operating in five communities selected for predominance of specified pollutant exposures. Within each of these communities, well-defined areas are further selected where population groups are exposed to gradients of a predominant pollutant or combination of pollutants. Each of the areas have an air monitoring site centered to represent the population's exposure. The number of monitoring sites by communities are:

Community	Predominant Pollutant	No. of Areas	No. of Monitoring Sites
Chattanooga	NO_x	4	9
S.E. Trio	TSP		
Birmingham		3	4
Charlotte		3	4
Greensboro		3	3
New York City	SO_2 and TSP	6	7
Utah	SO_2	4	4
California	O_x	6	6
		Total	37

The CHAMP proposal is presented by three optional plans (pages 11-17). Information concerning pollutants monitored for CHESS communities, time delays to final usable data and manpower requirements are given for each optional plan. Dollar costs for instrumentation and equipment are shown for each option by CHESS communities on page 18.

A data acquisition system is proposed (page 19) which provides magnetic tape recordings of the variables sampled. It also provides the capability for an "on-call" data retrieval operation. Normally the system records, into SAROAD format, digital data which is compatible to NADIS. In the event of pollution episodes, the data record is immediately available through a telephone calling system and logic command to the monitoring site. The system also serves as an interrogation method for checking instrument operation and calibration on an "on-call" basis. A comparison of the minimum time to useful data between the present CHESS operations and the proposed CHAMP system is described on page 17.

The methodology used for exposure monitoring involves the selection and application of the most appropriate method available. The use of EPA standard measurement methods is mandatory. Recent research and development are visioned toward the use of automated, instantaneous analysis instruments placed at the monitoring site. Such devices, if made official standard methods, will necessitate a CHESS program change to the CHAMP proposal.

Summary

This paper describes the present and past national air monitoring efforts of EPA, as a reference frame for discussion and exposure monitoring for health effects studies. A Community Health Air Monitoring Program (CHAMP) is proposed that will provide data to develop criteria for both short and long term air quality standards. Present air monitoring techniques deployed in the CHESS program are largely integrating methods for determining pollutant concentrations for twenty-four (24) hours or longer. These data have value for developing long term ($\geq$ 24 hrs.) ambient air quality standards. They do not provide adequate averaging times for the development of short term ($\leq$ 24 hrs.) standards. This paper proposes a program which will provide adequate averaging times and air monitoring techniques for developing short term standards. In addition, the new program would provide "on call" capability invaluable to local control officials in the New York and Los Angeles air quality regions.

The design of the Community Health and Environmental Surveillance System (CHESS) has focused monitoring of air, water, tissue, food and housedust into well defined residential areas within selected communities. These population studies require air quality exposure data to be representative of the population's environment under surveillance.

Estimates of equipment costs and manpower required are summarized into three optional plans as follows:

Monitoring Plan	Equipment Costs	Manpower (Man yrs/yr)
CHESS CHAMP - Optimum	$1,295,600	39
CHESS CHAMP - Intermediate	1,124,400	31
CHESS CHAMP - Minimum	956,800	25
Present CHESS	24,900	24

AIR MONITORING PROGRAM

SHORT AND LONG TERM STANDARDS

REQUIRED SHORT-TERM STANDARDS
(≤24 hours)

Particulates (TSP and respirable)

Oxides of nitrogen

Oxides of sulfur

Photochemical oxidants

Hydrocarbons

Carbon monoxide (no present CHESS health indicator)

CHESS INDICATORS
FOR
SHORT-TERM STANDARDS

I. Existing indicators: panel studies of symptom frequency and severity

A. Asthmatics

B. Elderly cardiacs

C. Elderly bronchitics

D. Well elderly

E. Families with school children during acute episodes

II. Fluctuations in daily mortality

III. Planned indicators:

A. Eye irritation and tear lysozyme levels*

B. Coronary artery disease deaths*

C. Fluctuations in ventilatory performance

D. Red blood cell fragility and survival as indexed by G6PD level and reticulocyte counts

E. Carboxhemoglobin, methemoglobin, and methemoglobin reductase levels

F. Sputum cellular and enzyme content

*Feasibility studies under contract

REQUIREMENTS OF AEROMETRIC MONITORING IN SUPPORT OF HEALTH STUDIES

I. Station must be located in or near population under study.

II. Pollutant sampling averaging times must be sufficiently short to allow for use in acute health effects studies that form the scientific basis for short term standards.

III. Sampling frequency should be sufficient to characterize air quality as a function of time.

IV. System should be flexible and responsive to emergency conditions with data available on short notice.

VARIABLES SAMPLED

	GASES								PARTICULATES					METEOROLOGY				STATIC MONITORS						BIO.	MULTI MEDIA	
	SO_2	NO_2	NO_x	O_x	CO	HC	Aldy	Amm	TSP	D Fall	RSP	AISI	w Bio	Wd Sp	Wd Dr	Temp	Humid	Sul Rte	Rb Ck	Mt Cr	D Fab	Sl T	Ny Det		Water	Sol W
CAMP	YES	YES	YES	YES	YES	YES			YES			YES														
DASN	YES	YES		YES			YES	YES	YES																	
EPCGTS										YES			YES					YES	YES	YES	YES	YES	YES			
GMBS	YES	YES	YES						YES	YES	YES	YES				YES	YES	YES						YES	YES	

W bio Wind blown nuisance particles
Sul Rte Sulfation Rate
Rb Ck Rubber Cracking
Mt Cr Metal Corrosion
D Fab Dyed Fabric
Sl T Silver Tarnish
Ny Det Nylon deterioration

SAMPLING FREQUENCY

	GASES								PARTICULATES					METEOROLOGY				STATIC MONITORS						BIO	MULTIMEDIA	
	SO_2	NO_2	NO_x	Ox	CO	HC	Aldy	Amm	TSP	D Fall	RSP	AISI	W blo	Wd Sp	Wd Dr	Temp	Humid	Sul Rte	Rb Ck	Mt Cr	D Fab	Sl T	Ny Det		Water	Sol W
CAMP	Cont	Cont	Cont	Cont	Cont	Cont			Daily			2 hr Cycle														
[illegible]	1 Samp each 2 weeks	1 Samp each 2 weeks		1 Samp each 2 weeks			1 Samp each 2 weeks	1 Samp each 2 weeks	1 Samp each 2 weeks																	
EFFECTS										Month			Month					Month	Month	Month	Month	Month	Month			
CIRCS	Daily	Daily	Daily						Daily	Month	Daily	2 hr Cycle				Daily	Daily	Month						Grab	Grab	

W Blo Wind blown nuisance particle
Sul Rte. Sulfation rate
Rb Ck Rubber cracking
Mt Cr Metal corrosion
D Fab Dyed fabric
Sl T Silver Tarnish
Ny Det Nylon deterioration

Cont Continuous sampling
Daily Sample runs for 24 hours
1 Samp each 2 Wks One 24 hour sample is taken each 2 weeks
Month Sample runs for one Calender month

SAMPLE AVERAGING TIMES

	GASES								PARTICULATES					METEOROLOGY				STATIC MONITORS						BIO	MULTI MEDIA	
	SO_2	NO_2	NO_x	Ox	CO	HC	Aldy	Amm	TSP	D Fall	RSP	RISI	* Bio	Wd Sp	Wd Dr	Temp	Humid	Sul Rte	Rb Ck	Mt Cr	D Fab	Sl T	Ny Det		Water	Sol W
CAMP	5 min	5 min	5 min	5 min	5 min	5 min			24 hr			2 hr														
DACON	24 hr	24 hr		24 hr			24 hr	24 hr	24 hr																	
[illegible]										Month			Month					Month	Month	Month	Month	Month	Month			
GIRGS	24 hr	24 hr	24 hr						24 hr	Month	24 hr	2 hr				Max Min	Max Min	Month						Grab	Grab	

* bio — Wind blown nuisance particles
Sul Rte — Sulfation rate
Rb Ck — Rubber cracking
Mt Cr — Metal Corrosion
D Fab — Dyed fabrics
Sl T — Silver tarnish
Ny Det — Nylon deterioration

PRESENT GRESS AIR MONITORING PROGRAM

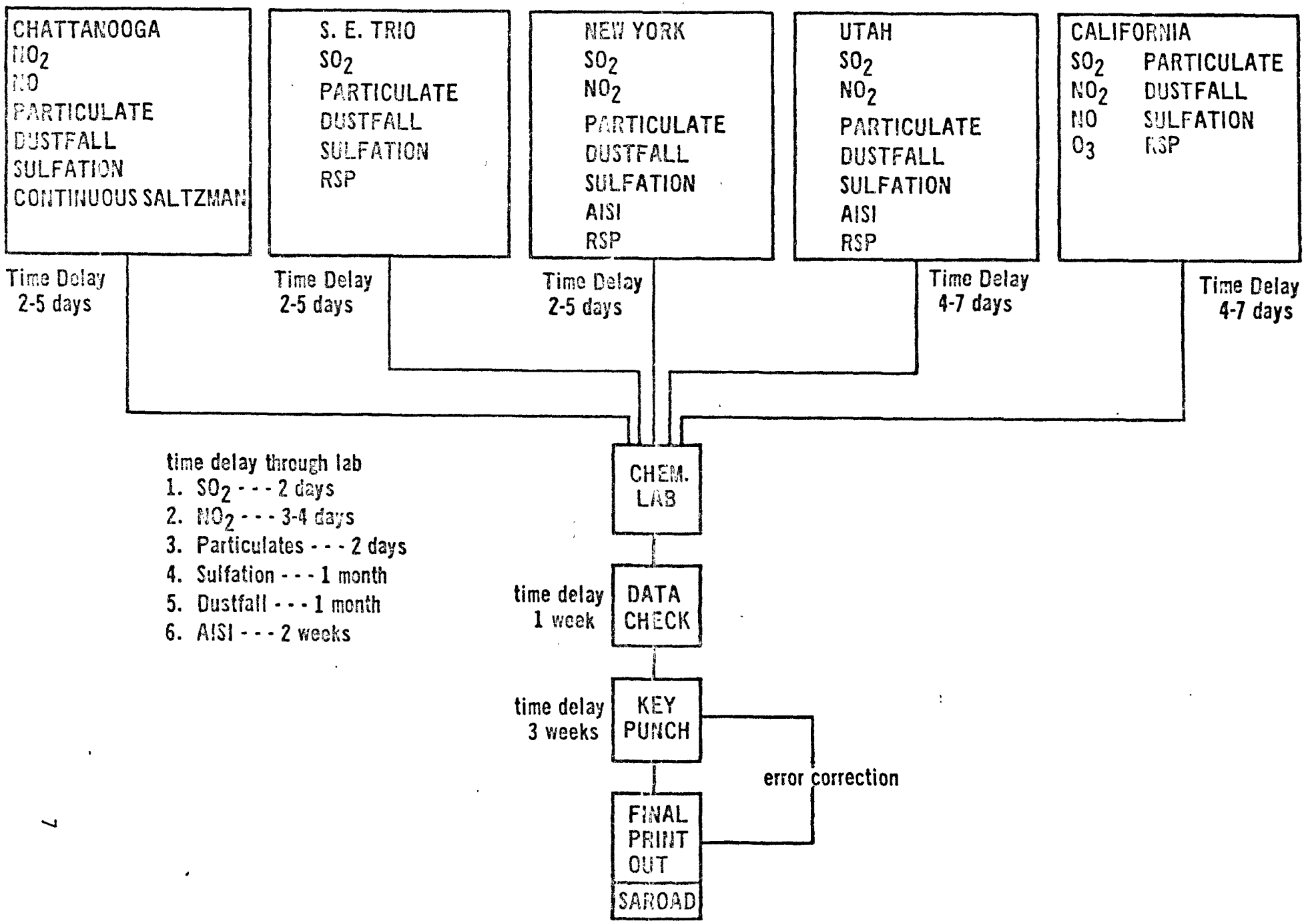

ESTIMATED MAN-HOURS/WEEK TO PERFORM CHESS OPERATIONS

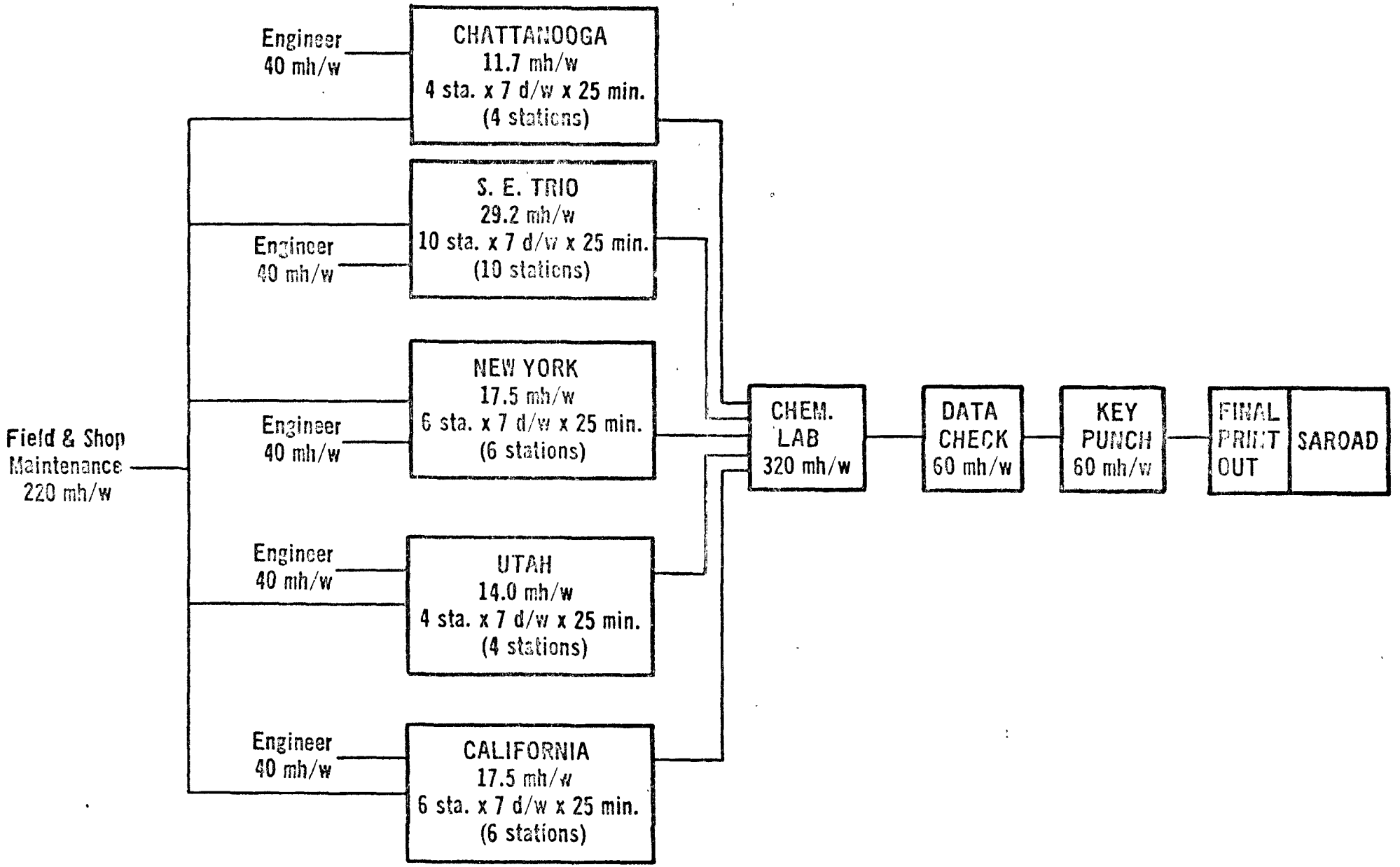

Total CHESS man hours/week
942.9 or 23.6 man-years/year
Does not include travel or administrative time

VARIABLES SAMPLED

	GASES								PARTICULATES					METEOROLOGY				STATIC MONITORS						BIO.	MULTI MEDIA	
	SO_2	NO_2	NO_x	Ox	CO	HC	Aldy	Arom	TSP	D Fall	RSP	ARSI	W Bio	Wd Sp	Wd Dr	Temp	Humid	Sol. Rte	Rb Ch.	Bl. Cr.	D. Fab.	Sl. T	Ry Det.		Water	Soil W
CAMP	YES	YES	YES	YES	YES	YES			YES			YES														
MASON	YES	YES		YES			YES	YES	YES																	
BURGETS										YES			YES					YES	YES	YES	YES	YES	YES			
CHICOS	YES	YES	YES						YES	YES	YES	YES						YES						YES	YES	
CHAMP	YES	YES	YES	YES	YES	YES			YES	YES	YES	YES		YES	YES	YES	YES	YES						YES	YES	YES

SAMPLING FREQUENCY

	GASES								PARTICULATES					METEOROLOGY				STATIC MONITORS						BIO.	MULTI MEDIA	
	SO_2	NO_2	NO_x	Ox	CO	HC	Aldy	Amm	TSP	D. Fall	RSP	AISI	W. Bio	Wd. Sp	Wd Dr	Temp.	Humid	Sul. Rte	Rb. Ch	Ex. Cr	D. Fab.	Sl. T	Hy. Det.		Water	Sol. W
CAMP	Cont	Cont	Cont	Cont	Cont	Cont			Daily			2 hr cycle														
[illegible]	1 Sample each 2 weeks	1 Sample each 2 weeks		1 Sample each 2 weeks			1 Sample each 2 weeks	1 Sample each 2 weeks	1 Sample each 2 weeks																	
[illegible]										Month			Month					Month	Month	Month	Month	Month	Month			
[illegible]	Daily	Daily	Daily						Daily	Month	Daily	2 hr cycle						Month						Grab	Grab	
CMAMP	Cont	Cont	Cont	Cont	Cont	Cont			Daily	Month	Daily	2 hr cycle		Cont	Cont	Cont	Cont							Grab	Grab	Grab

PROPOSED GIAMP AIR MONITORING PROGRAM
(OPTIMUM PLAN)

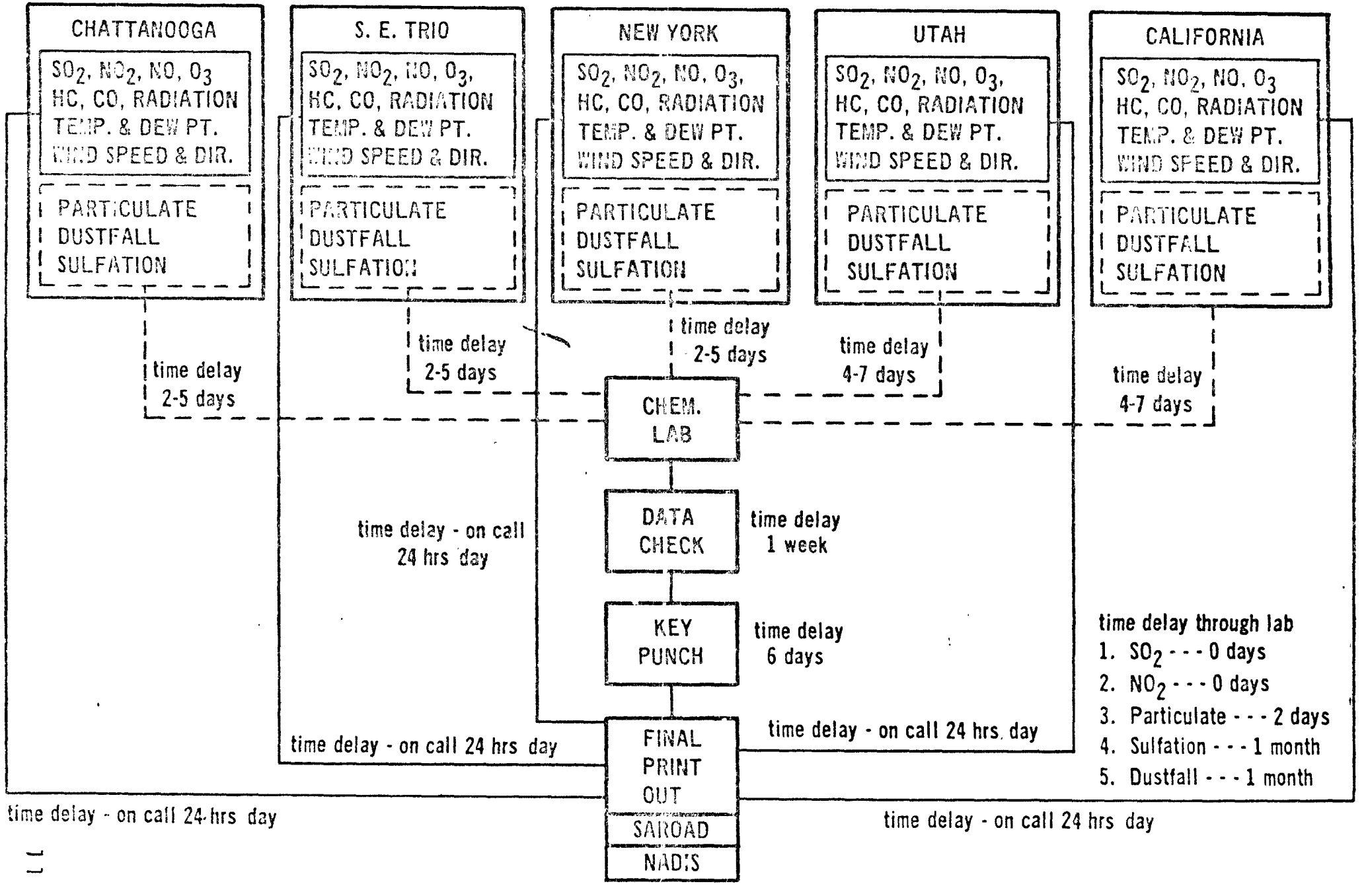

ESTIMATED MAN-HOURS/WEEK TO PERFORM CHAMP OPERATIONS (OPTIMUM PLAN)

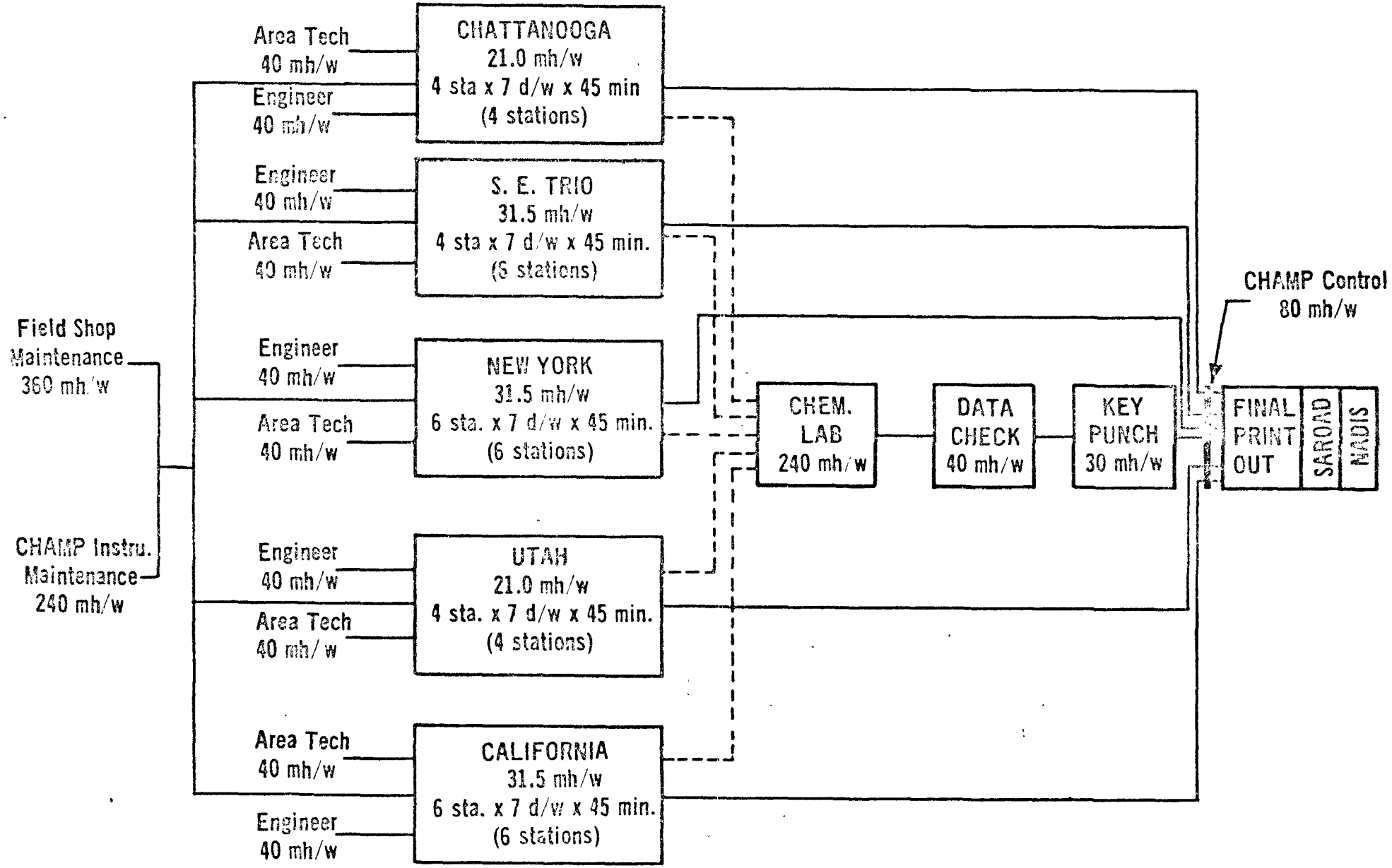

Total CHAMP man hours/week
1526.5 or 38.2 man-years/year
Does not include travel or administrative time

PROPOSED QUALITY ASSURANCE PROGRAM (INTERMEDIATE)

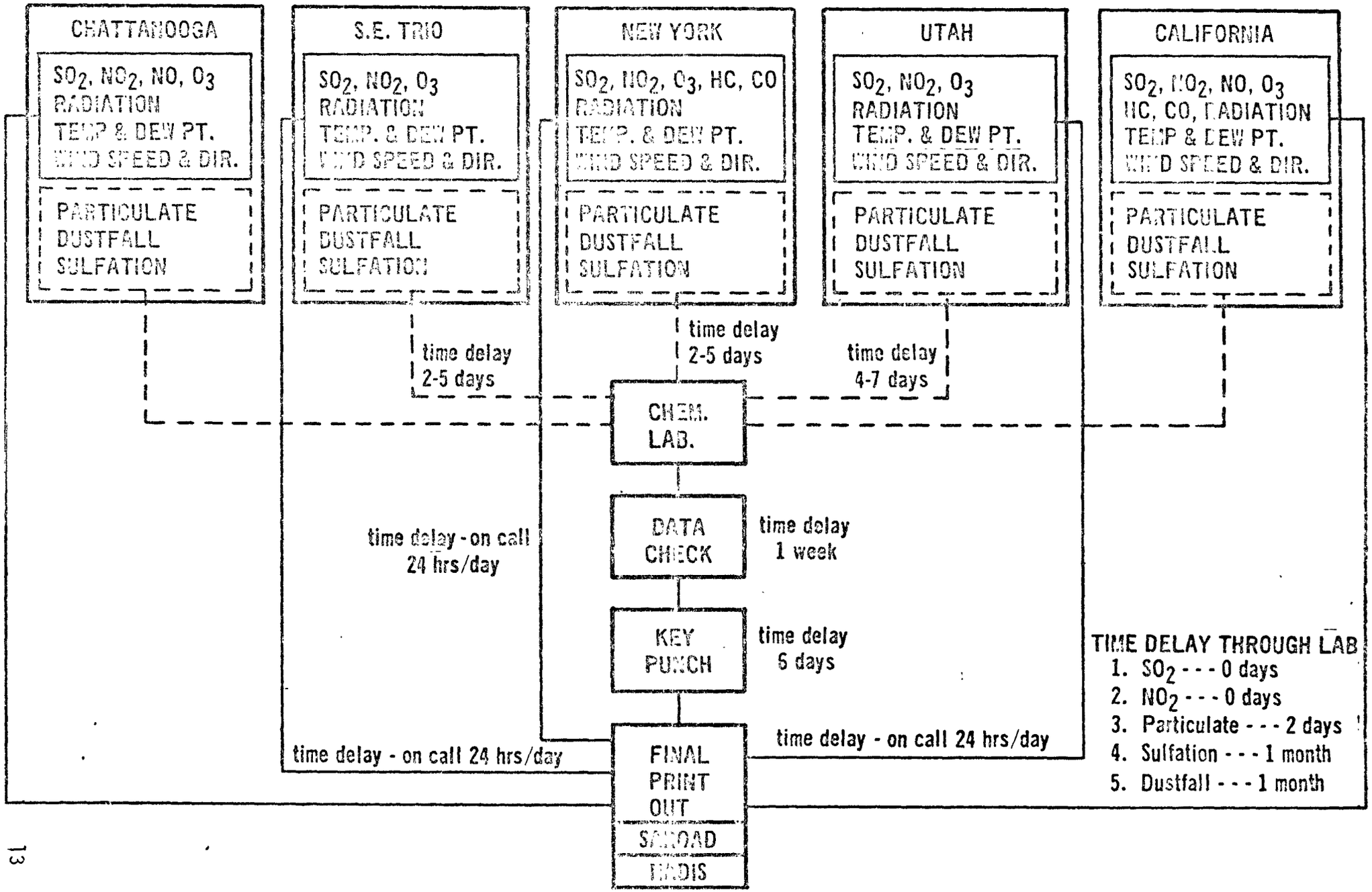

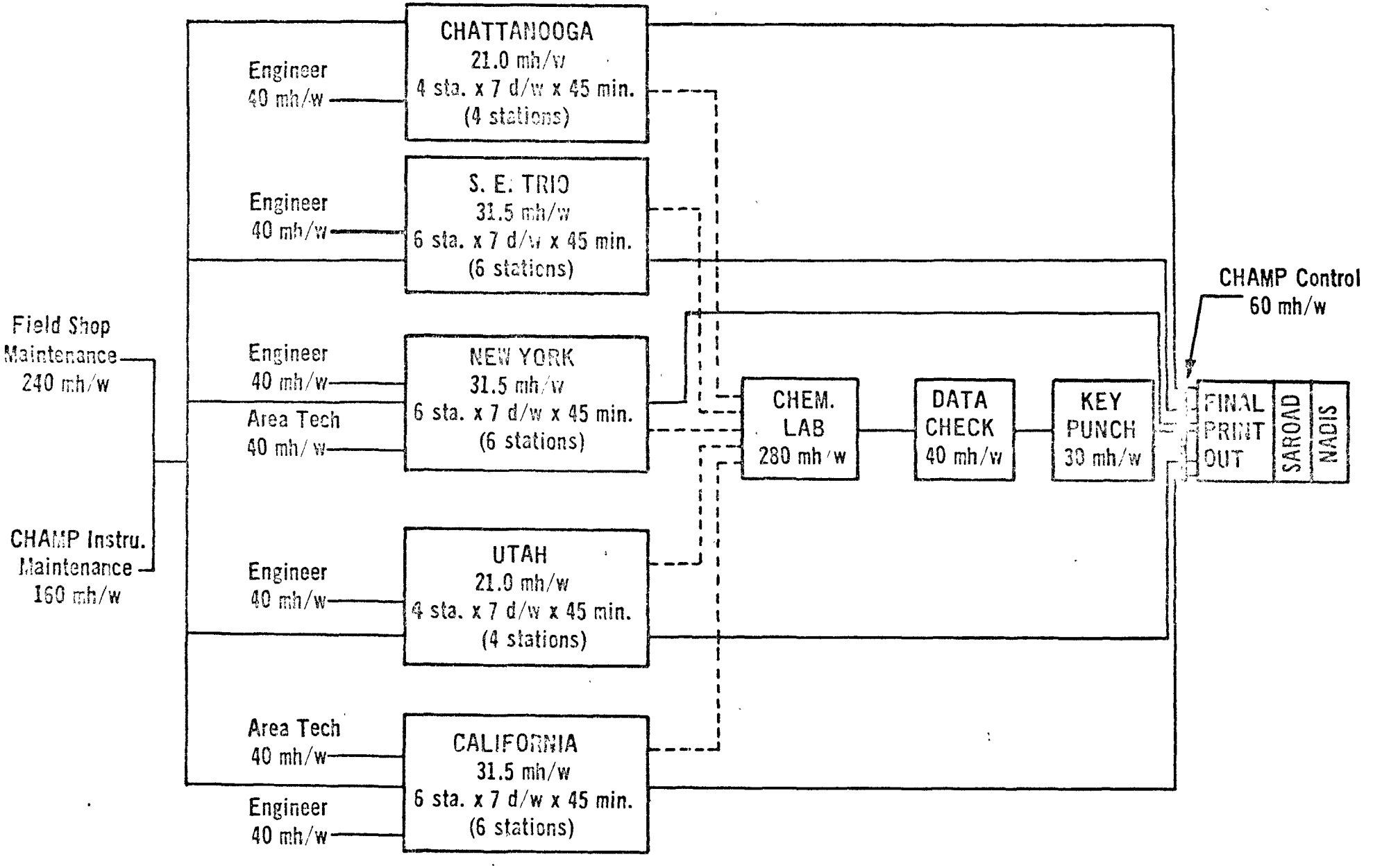

Total CHAMP man hours/week
1226.5 or 30.7 man-years/year
Does not include travel or administrative time

PROPOSED SMART AIR MONITORING PROGRAM
(INTERIM PLAN)

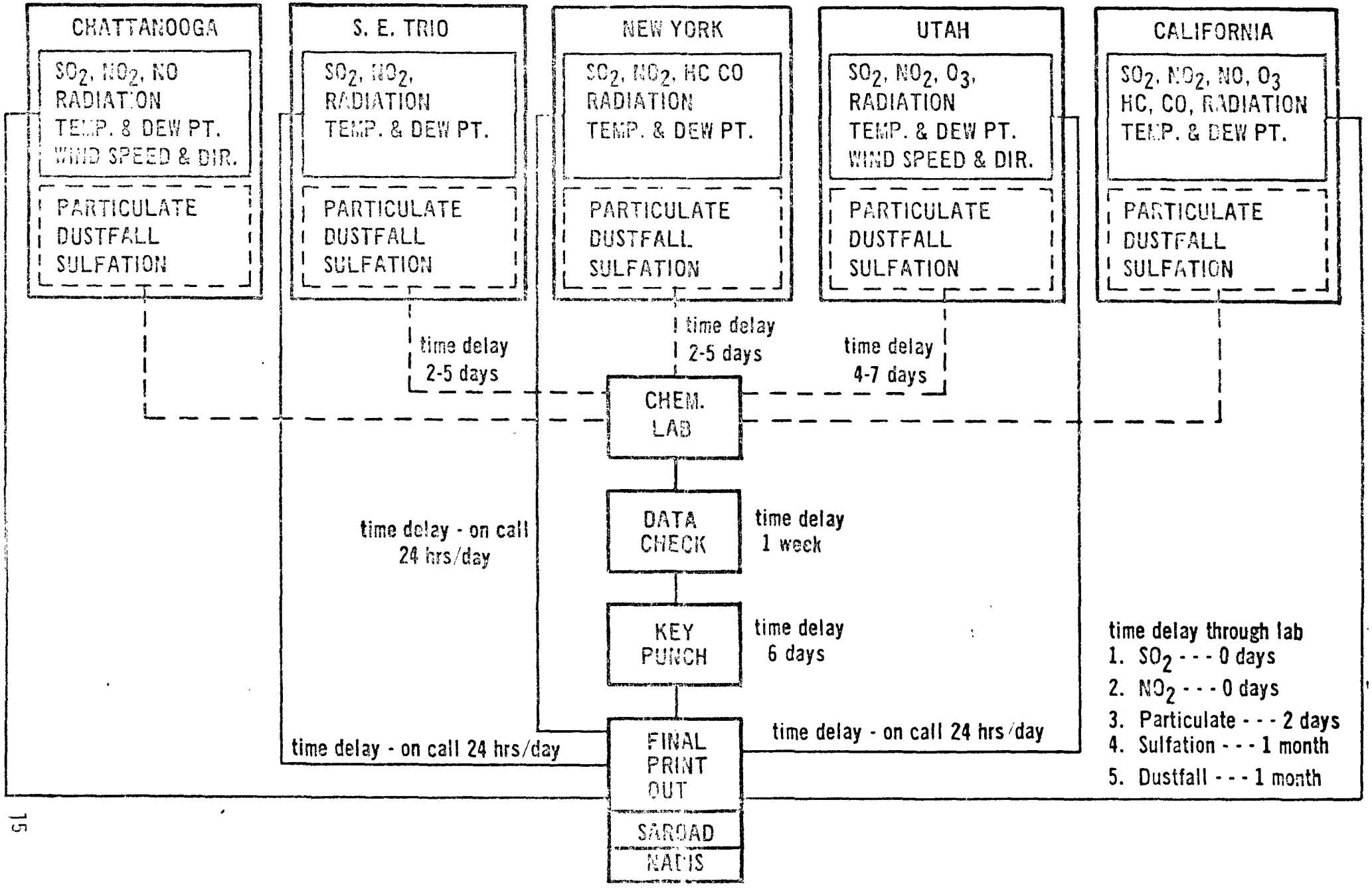

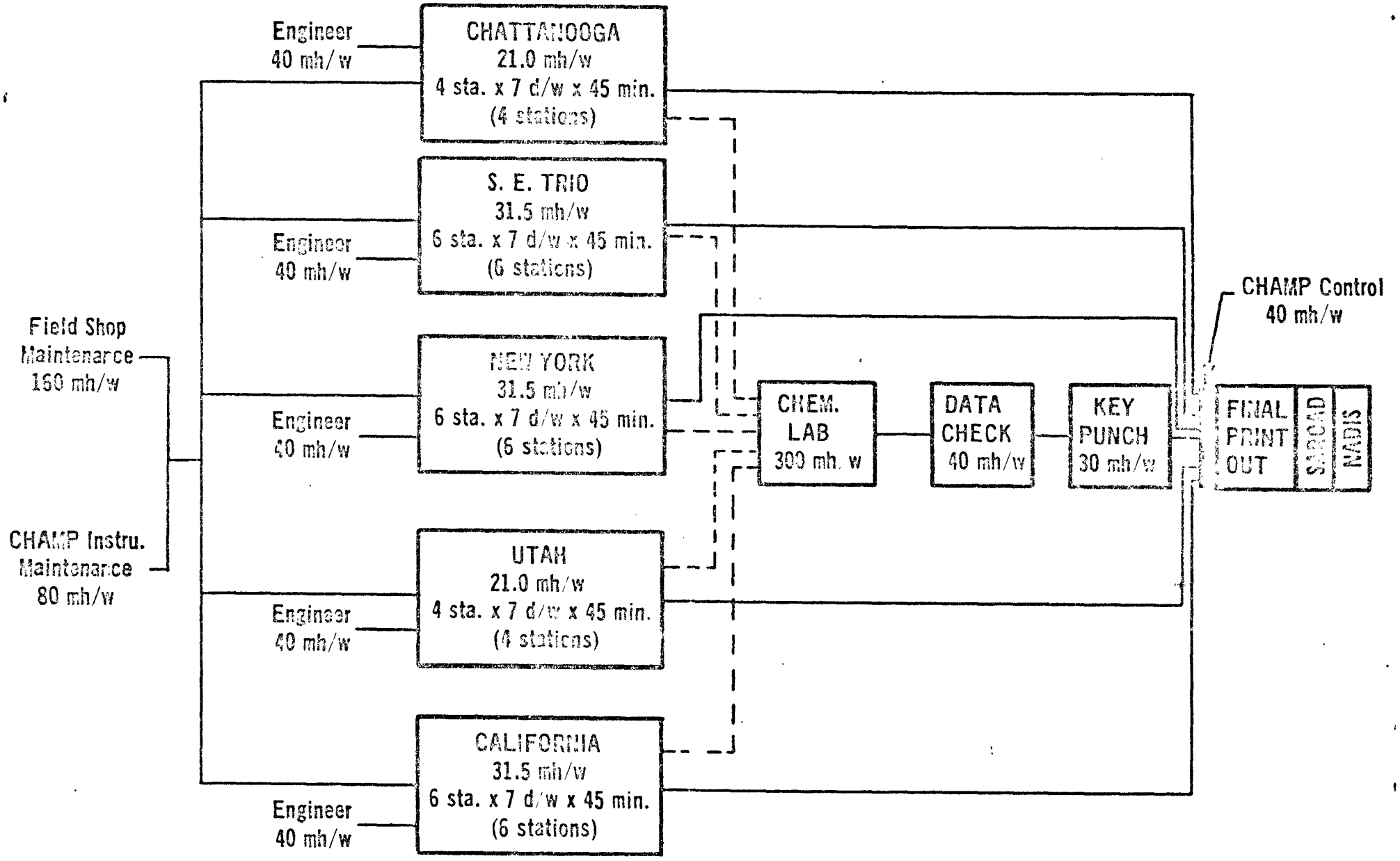

Total CHAMP man hours/week
986.5 or 24.7 man-years/year
Does not include travel or administrative time

MEDIAN TIME TO USEFUL DATA

	GUIDS	GUAMP
1. SO_2	32 DAYS	ON CALL 24 HR/DAY
2. NO_2	33 DAYS	ON CALL 24 HR/DAY
3. O_3	NOT AVAILABLE	ON CALL 24 HR/DAY
4. CO	NOT AVAILABLE	ON CALL 24 HR/DAY
5. HC	NOT AVAILABLE	ON CALL 24 HR/DAY
6. NO	NOT AVAILABLE	ON CALL 24 HR/DAY
7. RADIATION	NOT AVAILABLE	ON CALL 24 HR/DAY
8. WIND SP. & DIR.	NOT AVAILABLE	ON CALL 24 HR/DAY
9. TEMP. & DEW PT.	NOT AVAILABLE	ON CALL 24 HR/DAY
10. PARTICULATE	32 DAYS	32 DAYS
11. DUSTFALL	61 DAYS	61 DAYS
12. SULFATION	61 DAYS	61 DAYS

ESTIMATED EQUIPMENT COST FOR CHESS-CHAMP

(OPTIMUM PLAN)

1,295,600

S. E. (6 stations) CHESS - $5300 CHAMP - $299,000	NEW YORK (6 stations) CHESS - $5700 CHAMP - $299,000	UTAH (4 stations) CHESS - $5100 CHAMP - $199,300	CALIF (6 stations) CHESS - $5300 CHAMP - $299,000	CHATT (4 stations) CHESS - $3500 CHAMP - $199,300

(INTERMEDIATE PLAN)

$1,124,400

S. E. (6 stations) CHESS - $5300 CHAMP - $220,398	NEW YORK (6 stations) CHESS - $5700 CHAMP - $293,900	UTAH (4 stations) CHESS - $5100 CHAMP - $146,900	CALIF (6 stations) CHESS - 5300 CHAMP - $299,000	CHATT (4 stations) CHESS - $3500 CHAMP - $164,300

([illegible] PLAN)

$956,800

S.E. (6 stations) CHESS - $5300 CHAMP - $176,800	NEW YORK (6 stations) CHESS - $5700 CHAMP - $203,600	UTAH (4 stations) CHESS - $5100 CHAMP - $146,900	CALIF (6 stations) CHESS - $5300 CHAMP - $284,800	CHATT. (4 stations) CHESS - $3500 CHAMP - $144,700

Environmental Protection Agency
Library [illegible]
1 North Wacker Drive
Chicago, Illinois 60606

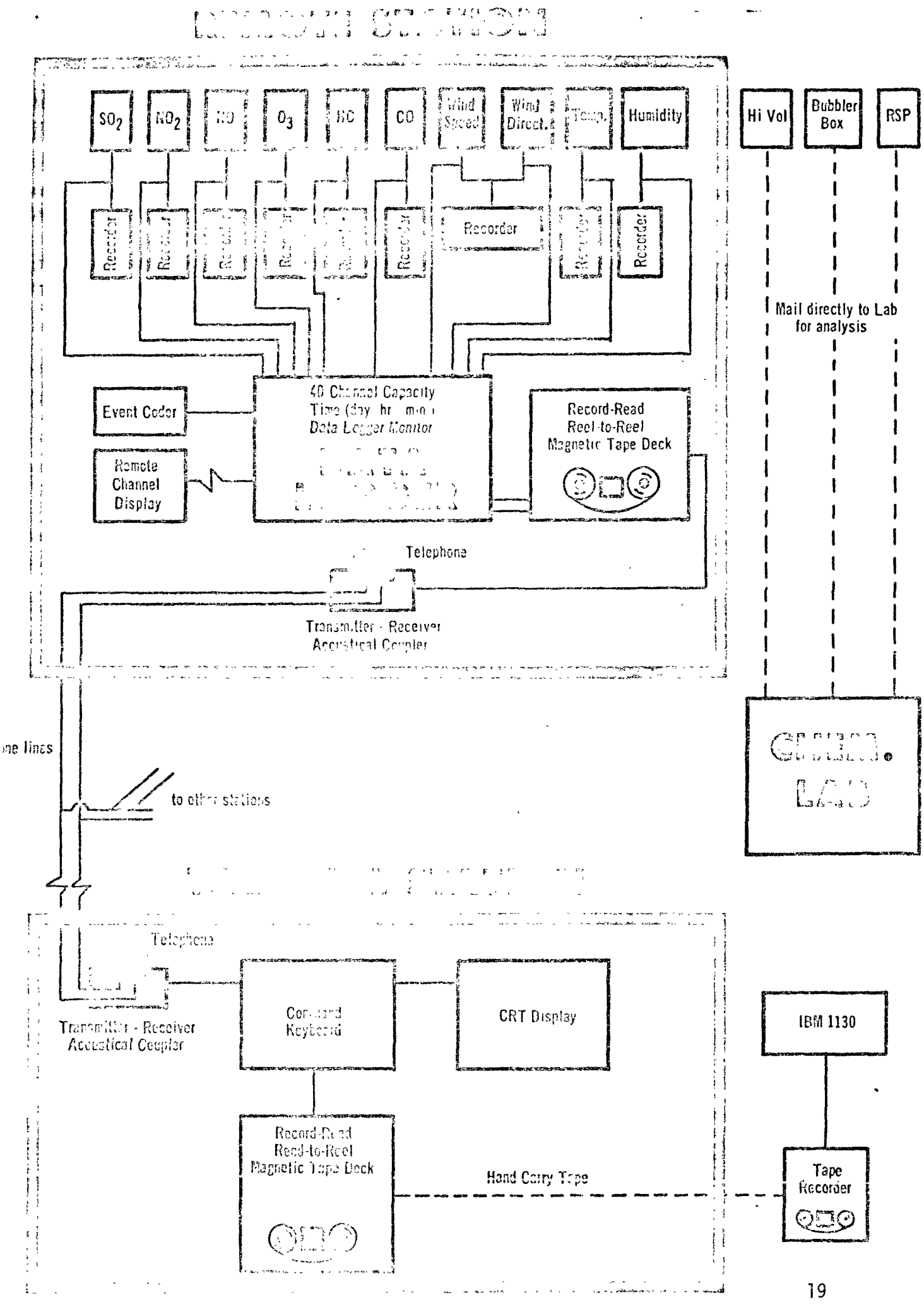
SO_2
NO_2
CO
O_3
HC
CO
Wind Speed
Wind Direct.
Temp.
Humidity
Hi Vol
Bubbler Box
RSP
Recorder
Recorder
Recorder
Mail directly to Lab for analysis
Event Coder
Remote Channel Display
40 Channel Capacity
Time (day hr min)
Data Logger Monitor
Record-Read
Reel-to-Reel
Magnetic Tape Deck
Telephone
Transmitter - Receiver
Acoustical Coupler
LAB
to other stations
Telephone
Transmitter - Receiver
Acoustical Coupler
Keyboard
CRT Display
IBM 1130
Record-Read
Reel-to-Reel
Magnetic Tape Deck
Hand Carry Tape
Tape Recorder