AP42511

United States
Environmental Protection
Agency

Office of Air Quality
Planning and Standards
Research Triangle Park NC 27711

AP-42
Fifth Edition
January 1995

Air

EPA

COMPILATION OF AIR POLLUTANT EMISSION FACTORS

VOLUME I: STATIONARY POINT AND AREA SOURCES

FIFTH EDITION

Office of Air Quality
Clean Air
OAQPS
Planning and Standards

U.S. Environmental Protection Agency
Region 5, Library (PL-12J)
77 West Jackson Boulevard, 12th Floor
Chicago, IL 60604-3590

NOTICE

The Emission Factor And Inventory Group (EFIG) has been working for several months on this Fifth Edition of AP-42. It is the result of a major technical undertaking by EFIG's AP-42 Team and the several contractors who assisted. This document represents a substantial step toward complying with Section 130 of the *Clean Air Act Amendments Of 1990*, which direct the U. S. Environmental Protection Agency to review and revise its air pollutant emission factors every three years. Although such updating is required only for ozone-related pollutants (total organic compounds, oxides of nitrogen, and carbon monoxide), the AP-42 Team has also addressed the other criteria pollutants, hazardous pollutants, global warming gases and speciation information, where data are available. Sections of AP-42 are continuously being developed, reviewed and/or updated.

Even though there are significant additions and improvements in this book, many data gaps and uncertainties still exist. All readers and users of AP-42 are asked to provide comments, test data, and any other information for our evaluation and possible use to improve future updates.

Users familiar with this document may notice changes in factor quality ratings, specifically that some factors, although unchanged or supported by even newer and more extensive data, are rated lower in quality than previously in the AP-42 series. This is attributable to the adoption of more consistent and stringently applied rating criteria. There are some factors in this edition with lower ratings than previously, but they are believed to represent appropriate estimates. AP-42 emission factors are truly for estimation purposes and are no substitute for exact measurements taken at a source.

Users should especially note this edition's expanded "Introduction", for its information on pollutant definition, factor limitations, the factor rating system, and cautionary notes on the use of factors for anything other than emission estimation and inventory and approximation purposes.

In addition to print, the AP-42 series is available in several other media. The *Air CHIEF* compact disc (CD-ROM), with AP-42 and other hazardous air pollutant emission estimation reports and data bases, can be purchased from the Government Printing Office. Also, *The CHIEF* electronic bulletin board (by modem, 919-541-5742) posts the latest AP-42 and other reports and tools before they are available on paper. Final sections of AP-42 can be obtained quickly from our automatic *Fax CHIEF* service (919-541-5626 or -0548). These last two media operate 24 hours per day, 7 days per week. If you have questions or need further information on these tools or other aspects of emission estimation, call our help line, *Info CHIEF*, at 919-541-5285, during regular office hours, eastern time.

If you have factor needs, new data, questions, or suggestions, please send them to the address below. You may also ask for a free subscription to *The CHIEF*, our quarterly newsletter (also on the electronic bulletin board and *Fax CHIEF*). Our abilities to respond to individual questions often get impinged by time and resource constraints and the sheer volume of requests, so please use the above capabilities and tools whenever possible. Though we are a client-oriented organization, we have neither staff nor structure to provide engineering support.

AP-42 Team (MD 14)
Emission Factor And Inventory Group
Emissions, Monitoring, And Analysis Division
Office Of Air Quality Planning And Standards
U. S. Environmental Protection Agency
Research Triangle Park, NC 27711

EPA-454/F-99-003

AP-42
Fifth Edition
Supplement D
August 1998

SUPPLEMENT D

TO

COMPILATION OF AIR POLLUTANT EMISSION FACTORS

VOLUME I: STATIONARY POINT AND AREA SOURCES

U.S. Environmental Protection Agency
Region 5, Library (PL-12J)
77 West Jackson Boulevard, 12th Floor
Chicago, IL 60604-3590

Office of Air Quality Planning and Standards
Office of Air and Radiation
U. S. Environmental Protection Agency
Research Triangle Park, NC 27711

August 1998

AP-42
Fifth Edition
Supplement A
February 1996

SUPPLEMENT A

TO

COMPILATION OF AIR POLLUTANT EMISSON FACTORS

VOLUME I: STATIONARY POINT AND AREA SOURCES

U.S. Environmental Protection Agency
Region 5, Library (PL-12J)
77 West Jackson Boulevard, 12th Floor
Chicago, IL 60604-3590

Office Of Air Quality Planning And Standards
Office Of Air And Radiation
U. S. Environmental Protection Agency
Research Triangle Park, NC 27711

February 1996

This report has been reviewed by the Office Of Air Quality Planning And Standards, U. S. Environmental Protection Agency, and has been approved for publication. Any mention of trade names or commercial products is not intented to constitute endorsement or recommendation for use.

AP-42
Fifth Edition
Volume I
Supplement A

AP-42
FIFTH EDITION
JANUARY 1995

COMPILATION OF AIR POLLUTANT EMISSION FACTORS

VOLUME I: STATIONARY POINT AND AREA SOURCES

U.S. Environmental Protection Agency
Region 5, Library (PL-12J)
77 West Jackson Boulevard, 12th Floor
Chicago, IL 60604-3590

Office Of Air Quality Planning And Standards
Office Of Air And Radiation
U. S. Environmental Protection Agency
Research Triangle Park, NC 27711

January 1995

This report has been reviewed by the Office Of Air Quality Planning And Standards, U. S. Environmental Protection Agency, and has been approved for publication. Any mention of trade names or commercial products is not intended to constitute endorsement or recommendation for use.

AP-42
Fifth Edition
Volume I

Instructions for Inserting *Supplement D* of Volume I Iinto AP-42

Chap. 1, Sect. 1.4	Natural Gas Combustion	Replace entire	Major revision
Chap. 1, Sect. 1.6	Wood Waste Combustion in Boilers	Replace entire	Major revision
Chap. 2, Sect. 2.4	Municipal Solid Waste Landfills	Replace entire	Major revision
Chap. 4, Sect. 4.3	Waste Water Collection, Treatment and Storage	Replace entire	Minor revision
Chap. 7, Sect. 7.1	Organic Liquid Storage Tanks	Replace entire	Major revision
Chap. 8, Sect. 8.8	Nitric Acid	Replace entire	Minor revision
Chap. 9, Sect. 9.9.1	Grain Elevators and Processes	Replace entire	Major revision
Chap. 10, Sect. 10.5	Plywood Manufacturing	Replace [Work in Progess] sheet	New section
Chap. 11, Sect. 11.17	Lime Manufacturing	Replace entire	Minor revision
Chap. 12, Sect. 12.1	Primary Aluminum Production	Replace entire	Minor revision
Chap. 13, Sect. 13.2.1	Paved Roads	Replace entire	Major revision
Chap. 13, Sect. 13.2.6	Abrasive Blasting		New section
Chap. 14, Sect. 14.4	Enteric Fermentation - Greenhouse Gases		New section

Insert new Technical Report Data sheet.

Instructions For Inserting
Supplement A Of Volume I
Into AP-42

Pp. 1.1-3 through -24 replace same. Editorial Change.
Pp. 1.2-3 through -6 replace same. Editorial Change.
Pp. 1.3-1 through -12 and -15 through -18 replace same. Editorial Change.
Pp. 1.4-3 and -4 replace same. Editorial Change.
Pp. 1.6-3 through -6 replace same. Editorial Change.
Pp. 1.7-3 through -8 replace same. Editorial Change.
Pp. 1.11-5 and -6 replace same. Editorial Change.
Pp. 3.1-3 through -6 replace same. Editorial Change.
Pp. 3.2-3 and -4 and -7 and -8 replace same. Editorial Change.
Pp. 3.4-3 and -4 replace same. Editorial Change.
Pp. 5.3-1 through -8 (blank) replace same. Editorial Change.
Pp. 7.0-1 and -2 (blank) replace same. Revised Chapter Introduction.
Pp. 7.1-1 through -102 (blank) replace 7.1-1 through -108 (blank). Major Revision.
Pp. 9.5.2-1 through -6 replace 9.5.2-1 and -2 (blank). New Section.
Pp. 9.5.3-1 through -8 replace 9.5.3-1 and -2 (blank). New Section.
Pp. 9.8.1-1 through -8 replace 9.8.1-1 and -2 (blank). New Section.
Pp. 9.8.2-1 through -4 replace 9.8.2-1 and -2 (blank). New Section.
Pp. 9.8.3-1 through -4 replace 9.8.3-1 and -2 (blank). New Section.
Pp. 9.9.1-1 and -2 (blank) replace same. New Information.
Pp. 9.9.2-1 through -12 replace 9.9.2-1 and -2 (blank). New Section.
Pp. 9.9.5-1 through -4 (blank) replace 9.9.5-1 and -2 (blank). New Section.
Pp. 9.11.1-1 through -12 (blank) replace 9.11.1-1 and -2 (blank). New Section.
Pp. 9.12.2-1 through -10 (blank) replace 9.12.2-1 and -2 (blank). New Section.
Pp. 9.13.2-1 through -8 (blank) replace 9.13.2-1 and -2 (blank). New Section.
Pp. 10.7-1 through -8 (blank) replace 10.7-1 and -2 (blank). New Section.
Pp. 11.10-1 through -8 (blank) replace 11.10-1 through -4. Major Revision.
Pp. 11.14-1 through -6 (blank) replace 11.14-1 and -2 (blank). New Section.
Pp. 11.19.1-1 through -8 replace 11.19.1-1 and -2 (blank). New Section.
Pp. 11.22-1 through -6 (blank) replace 11.22-1 and -2 (blank). New Section.
Pp. 11.26-1 through -8 (blank) replace 11.26-1 through -4 (blank). Major Revision.
Pp. 11.28-1 through -4 replace 11.28-1 and -2 (blank). New Section.
Pp. 13.2.1-1 through -28 replace same. Editorial Change.
Pp. 13.2.2-1 through -8 replace same. Editorial Change.
Pp. B.2-3 and -4 replace same. Editorial Change.
Insert new Technical Report Data Sheet.

AP-42
Fifth Edition
Supplement B
November 1996

SUPPLEMENT B

TO

COMPILATION OF AIR POLLUTANT EMISSION FACTORS

VOLUME I: STATIONARY POINT AND AREA SOURCES

U.S. Environmental Protection Agency
Region 5, Library (PL-12J)
77 West Jackson Boulevard, 12th Floor
Chicago, IL 60604-3590

Office Of Air Quality Planning And Standards
Office Of Air And Radiation
U. S. Environmental Protection Agency
Research Triangle Park, NC 27711

November 1996

This report has been reviewed by the Office Of Air Quality Planning And Standards, U. S. Environmental Protection Agency, and has been approved for publication. Any mention of trade names or commercial products is not intented to constitute endorsement or recommendation for use.

AP-42
Fifth Edition
Volume I
Supplement B

Instructions For Inserting *Supplement B* Of Volume I Into AP-42

Preliminary Matter	Publications In Series, Contents, Key Word Index	Replace all	Minor Revision
Chap. 1, Sect 1-11	External Combustion Sources	Replace all	New Information
Chap. 2, Sect. 1	Refuse Combustion	Replace entire	Minor Revision
Chap. 3, Sect. 1-4	Stationary Internal Combustion Sources	Replace all	New Information
Chap. 6, Sect. 2	Adipic Acid	Replace entire	Major Revision
Chap. 9, Sect. 7	Cotton Ginning	Replace [Work In Progress] sheet	New Section
Chap. 9, Sect. 9.4	Alfalfa Dehydrating	Replace [Work In Progress] sheet	New Section
Chap. 9, Sect. 12.1	Malt Beverages	Replace [Work In Progress] sheet	New Section
Chap. 11, Sect. 7	Ceramic Products Manufacturing	Replace entire	Major Revision
Chap. 12, Sect. 20	Electroplating	Add	New Section
Chap. 13, Sect. 1	Wildfires And Prescribed Burning	Replace entire	Minor Revision
Chap. 14, Sect. 1-3	Greenhouse Gas Biogenic Sources	Add	New Chapter

Insert new Technical Report Data Sheet.

This report has been reviewed by the Office of Air Quality Planning and Standards, U. S. Environmental Protection Agency, and has been approved for publication. Any mention of trade names or commercial products is not intended to constitute endorsement or recommendation for use.

AP-42
Fifth Edition
Volume I
Supplement D

PUBLICATIONS IN SERIES

Issue	*Date*
COMPILATION OF AIR POLLUTANT EMISSION FACTORS, FIFTH EDITION	1/95
SUPPLEMENT A	11/96

Introduction

Section	1.1	Bituminous And Subbituminous Coal Combustion
	1.2	Anthracite Coal Combustion
	1.3	Fuel Oil Combustion
	1.4	Natural Gas Combustion
	1.6	Wood Waste Combustion in Boilers
	1.7	Lignite Combustion
	1.11	Waste Oil Combustion
	3.1	Stationary Gas Turbines For Electricity Generation
	3.2	Heavy-duty Natural Gas-fired Pipeline Compressor Engines
	3.4	Large Stationary Diesel And AU Stationary Dual-fuel Engines
	5.3	Natural Gas Processing
	7.0	Liquid Storage Tanks Introduction
	7.1	Organic Liquid Storage Tanks
	9.5.2	Meat Smokehouses
	9.5.3	Meat Rendering Plants
	9.8.1	Canned Fruits And Vegetables
	9.8.2	Dehydrated Fruits And Vegetables
	9.8.3	Pickles, Sauces And Salad Dressings
	9.9.1	Grain Elevators And Processes
	9.9.2	Cereal Breakfast Food
	9.9.5	Pasta Manufacturing
	9.11.1	Vegetable Oil Processing
	9.12.2	Wines And Brandy
	9.13.2	Coffee Roasting
	10.7	Charcoal
	11.10	Coal Cleaning
	11.14	Frit Manufacturing
	11.19	Construction Aggregate Processing
	11.22	Diatomite Processing
	11.26	Talc Processing
	11.28	Vermiculite Processing
	13.2.1	Paved Roads
	12.2.2	Unpaved Roads
Appendix B. 2		Generalized Particle Size Distributions

SUPPLEMENT B 11/96

Section

1.1 Bituminous And Subbituminous Coal Combustion
1.2 Anthracite Coal Combustion
1.3 Fuel Oil Combustion
1.4 Natural Gas Combustion
1.5 Liquefied Petroleum Gas Combustion
1.6 Wood Waste Combustion In Boilers
1.7 Lignite Combustion
1.8 Bagasse Combustion In Sugar Mills
1.9 Residential Fireplaces
1.10 Residential Wood Stoves
1.11 Waste Oil Combustion
2.1 Refuse Combustion
3.1 Stationary Gas Turbines For Electricity Generation
3.2 Heavy-duty Natural Gas-fired Pipeline Compressor Engines
3.3 Gasoline And Diesel Industrial Engines
3.4 Large Stationary Diesel And All Stationary Dual-fuel Engines
6.2 Adipic Acid
9.7 Cotton Ginning
9.9.4 Alfalfa Dehydrating
9.12.1 Malt Beverages
11.7 Ceramic Products Manufacturing
12.20 Electroplating
13.1 Wildfires And Prescribed Burning
14.0 Greenhouse Gas Biogenic Sources
14.1 Emissions From Soils-Greenhouse Gases
14.2 Terrnites-Greenhouse Gases
14.3 Lightning Emissions-Greenhouse

SUPPLEMENT C 11/97

Section

9.5.1 Meat Packing Plants
9.6.1 Natural and Processed Cheese
9.9.6 Bread Baking
9.10.1.1 Cane Sugar Processing
9.10.1.2 Sugarbeet Processing
9.12.3 Distilled Spirits
9.15 Leather Tanning
11.3 Brick And Structural Clay Product Manufacturing
11.14 Frit Manufacturing
11.23 Taconite Ore Processing

Section

1.4	Natural Gas Combustion
1.6	Wood Waste Combustion in Boilers
2.4	Municipal Solid Waste in Landfills
4.3	Waste Water Collection, Treatment and Storage
7.1	Organic Liquid Storage Tanks
8.8	Nitric Acid
9.9.1	Grain Elevators and Processes
10.5	Plywood Manufacturing
11.17	Lime Manufacturing
12.1	Primary Aluminum Production
13.2.1	Paved Roads
13.2.6	Abrasive Blasting
14.4	Enteric Fermentation - Greenhouse Gases

CONTENTS

		Page
INTRODUCTION		1
1.	EXTERNAL COMBUSTION SOURCES	1.0-1
1.1	Bituminous And Subbituminous Coal Combustion	1.1-1
1.2	Anthracite Coal Combustion	1.2-1
1.3	Fuel Oil Combustion	1.3-1
1.4	Natural Gas Combustion	1.4-1
1.5	Liquefied Petroleum Gas Combustion	1.5-1
1.6	Wood Waste Combustion In Boilers	1.6-1
1.7	Lignite Combustion	1.7-1
1.8	Bagasse Combustion In Sugar Mills	1.8-1
1.9	Residential Fireplaces	1.9-1
1.10	Residential Wood Stoves	1.10-1
1.11	Waste Oil Combustion	1.11-1
2.	SOLID WASTE DISPOSAL	2.0-1
2.1	Refuse Combustion	2.1-1
2.2	Sewage Sludge Incineration	2.2-1
2.3	Medical Waste Incineration	2.3-1
2.4	Landfills	2.4-1
2.5	Open Burning	2.5-1
2.6	Automobile Body Incineration	2.6-1
2.7	Conical Burners	2.7-1
3.	STATIONARY INTERNAL COMBUSTION SOURCES	3.0-1
3.1	Stationary Gas Turbines For Electricity Generation	3.1-1
3.2	Heavy-duty Natural Gas-fired Pipeline Compressor Engines	3.2-1
3.3	Gasoline And Diesel Industrial Engines	3.3-1
3.4	Large Stationary Diesel And All Stationary Dual-fuel Engines	3.4-1
4.	EVAPORATION LOSS SOURCES	4.0-1
4.1	Dry Cleaning	4.1-1
4.2	Surface Coating	4.2-1
4.2.1	Nonindustrial Surface Coating	4.2.1-1
4.2.2	Industrial Surface Coating	4.2.2-1
4.2.2.1	General Industrial Surface Coating	4.2.2.1-1
4.2.2.2	Can Coating	4.2.2.2-1
4.2.2.3	Magnet Wire Coating	4.2.2.3-1
4.2.2.4	Other Metal Coating	4.2.2.4-1
4.2.2.5	Flat Wood Interior Panel Coating	4.2.2.5-1
4.2.2.6	Paper Coating	4.2.2.6-1
4.2.2.7	Polymeric Coating Of Supporting Substrates	4.2.2.7-1
4.2.2.8	Automobile And Light Duty Truck Surface Coating Operations	4.2.2.8-1
4.2.2.9	Pressure Sensitive Tapes And Labels	4.2.2.9-1
4.2.2.10	Metal Coil Surface Coating	4.2.2.10-1

4.2.2.11 Large Appliance Surface Coating 4.2.2.11-1
4.2.2.12 Metal Furniture Surface Coating 4.2.2.12-1
4.2.2.13 Magnetic Tape Manufacturing 4.2.2.13-1
4.2.2.14 Surface Coating Of Plastic Parts For Business Machines 4.2.2.14-1
4.3 Waste Water Collection, Treatment And Storage 4.3-1
4.4 Polyester Resin Plastic Products Fabrication 4.4-1
4.5 Asphalt Paving Operations 4.5-1
4.6 Solvent Degreasing 4.6-1
4.7 Waste Solvent Reclamation 4.7-1
4.8 Tank And Drum Cleaning 4.8-1
4.9 Graphic Arts 4.9-1
4.9.1 General Graphic Printing 4.9.1-1
4.9.2 Publication Gravure Printing 4.9.2-1
4.10 Commercial/Consumer Solvent Use 4.10-1
4.11 Textile Fabric Printing 4.11-1

5. PETROLEUM INDUSTRY 5.0-1
5.1 Petroleum Refining 5.1-1
5.2 Transportation And Marketing Of Petroleum Liquids 5.2-1
5.3 Natural Gas Processing 5.3-1

6. ORGANIC CHEMICAL PROCESS INDUSTRY 6.0-1
6.1 Carbon Black 6.1-1
6.2 Adipic Acid 6.2-1
6.3 Explosives 6.3-1
6.4 Paint And Varnish 6.4-1
6.5 Phthalic Anhydride 6.5-1
6.6 Plastics 6.6-1
6.6.1 Polyvinyl Chloride 6.6.1-1
6.6.2 Poly(ethylene terephthalate) 6.6.2-1
6.6.3 Polystyrene 6.6.3-1
6.6.4 Polypropylene 6.6.4-1
6.7 Printing Ink 6.7-1
6.8 Soap And Detergents 6.8-1
6.9 Synthetic Fibers 6.9-1
6.10 Synthetic Rubber 6.10-1
6.11 Terephthalic Acid 6.11-1
6.12 Lead Alkyl 6.12-1
6.13 Pharmaceuticals Production 6.13-1
6.14 Maleic Anhydride 6.14-1
6.15 Methanol 6.15-1
6.16 Acetone And Phenol 6.16-1
6.17 Propylene 6.17-1
6.18 Benzene, Toluene And Xylenes 6.18-1
6.19 Butadiene 6.19-1
6.20 Cumene 6.20-1
6.21 Ethanol 6.21-1
6.22 Ethyl Benzene 6.22-1
6.23 Ethylene 6.23-1
6.24 Ethylene Dichloride And Vinyl Chloride 6.24-1
6.25 Ethylene Glycol 6.25-1

6.26 Ethylene Oxide 6.26-1
6.27 Formaldehyde 6.27-1
6.28 Glycerine 6.28-1
6.29 Isopropyl Alcohol 6.29-1

7. LIQUID STORAGE TANKS 7.0-1
7.1 Organic Liquid Storage Tanks 7.1-1

8. INORGANIC CHEMICAL INDUSTRY 8.0-1
8.1 Synthetic Ammonia 8.1-1
8.2 Urea 8.2-1
8.3 Ammonium Nitrate 8.3-1
8.4 Ammonium Sulfate 8.4-1
8.5 Phosphate Fertilizers 8.5-1
8.5.1 Normal Superphosphates 8.5.1-1
8.5.2 Triple Superphosphates 8.5.2-1
8.5.3 Ammonium Phosphate 8.5.3-1
8.6 Hydrochloric Acid 8.6-1
8.7 Hydrofluoric Acid 8.7-1
8.8 Nitric Acid 8.8-1
8.9 Phosphoric Acid 8.9-1
8.10 Sulfuric Acid 8.10-1
8.11 Chlor-Alkali 8.11-1
8.12 Sodium Carbonate 8.12-1
8.13 Sulfur Recovery 8.13-1
8.14 Hydrogen Cyanide 8.14-1

9. FOOD AND AGRICULTURAL INDUSTRIES 9.0-1
9.1 Tilling Operations 9.1-1
9.2 Growing Operations 9.2-1
9.2.1 Fertilizer Application 9.2.1-1
9.2.2 Pesticide Application 9.2.2-1
9.2.3 Orchard Heaters 9.2.3-1
9.3 Harvesting Operations 9.3-1
9.3.1 Cotton Harvesting 9.3.1-1
9.3.2 Grain Harvesting 9.3.2-1
9.3.3 Rice Harvesting 9.3.3-1
9.3.4 Cane Sugar Harvesting 9.3.4-1
9.4 Livestock And Poultry Feed Operations 9.4-1
9.4.1 Cattle Feedlots 9.4.1-1
9.4.2 Swine Feedlots 9.4.2-1
9.4.3 Poultry Houses 9.4.3-1
9.4.4 Dairy Farms 9.4.4-1
9.5 Animal And Meat Products Preparation 9.5-1
9.5.1 Meat Packing Plants 9.5.1-1
9.5.2 Meat Smokehouses 9.5.2-1
9.5.3 Meat Rendering Plants 9.5.3-1
9.5.4 Manure Processing 9.5.4-1
9.5.5 Poultry Slaughtering 9.5.5-1
9.6 Dairy Products 9.6-1
9.6.1 Natural And Processed Cheese 9.6.1-1

9.7 Cotton Ginning 9.7-1
9.8 Preserved Fruits And Vegetables 9.8-1
9.8.1 Canned Fruits And Vegetables 9.8.1-1
9.8.2 Dehydrated Fruits And Vegetables 9.8.2-1
9.8.3 Pickles, Sauces And Salad Dressings 9.8.3-1
9.9 Grain Processing 9.9-1
9.9.1 Grain Elevators And Processes 9.9.1-1
9.9.2 Cereal Breakfast Food 9.9.2-1
9.9.3 Pet Food 9.9.3-1
9.9.4 Alfalfa Dehydration 9.9.4-1
9.9.5 Pasta Manufacturing 9.9.5-1
9.9.6 Bread Baking 9.9.6-1
9.9.7 Corn Wet Milling 9.9.7-1
9.10 Confectionery Products 9.10-1
9.10.1 Sugar Processing 9.10.1-1
9.10.1.1 Cane Sugar Processing 9.10.1.1-1
9.10.1.2 Beet Sugar Processing 9.10.1.2-1
9.10.2 Salted And Roasted Nuts And Seeds 9.10.2-1
9.10.2.1 Almond Processing 9.10.2.1-1
9.10.2.2 Peanut Processing 9.10.2.2-1
9.11 Fats And Oils 9.11-1
9.11.1 Vegetable Oil Processing 9.11.1-1
9.12 Beverages 9.12-1
9.12.1 Malt Beverages 9.12.1-1
9.12.2 Wines And Brandy 9.12.2-1
9.12.3 Distilled Spirits 9.12.3-1
9.13 Miscellaneous Food And Kindred Products 9.13-1
9.13.1 Fish Processing 9.13.1-1
9.13.2 Coffee Roasting 9.13.2-1
9.13.3 Snack Chip Deep Fat Frying 9.13.3-1
9.13.4 Yeast Production 9.13.4-1
9.14 Tobacco Products 9.14-1
9.15 Leather Tanning 9.15-1
9.16 Agricultural Wind Erosion 9.16-1

10. WOOD PRODUCTS INDUSTRY 10.0-1
10.1 Lumber 10.1-1
10.2 Chemical Wood Pulping 10.2-1
10.3 Pulp Bleaching 10.3-1
10.4 Papermaking 10.4-1
10.5 Plywood 10.5-1
10.6 Reconstituted Wood Products 10.6-1
10.6.1 Waferboard And Oriented Strand Board 10.6.1-1
10.6.2 Particleboard 10.6.2-1
10.6.3 Medium Density Fiberboard 10.6.3-1
10.7 Charcoal 10.7-1
10.8 Wood Preserving 10.8-1

11. MINERAL PRODUCTS INDUSTRY 11.0-1
11.1 Hot Mix Asphalt Plants 11.1-1
11.2 Asphalt Roofing 11.2-1

11.3 Bricks And Related Clay Products 11.3-1
11.4 Calcium Carbide Manufacturing 11.4-1
11.5 Refractory Manufacturing 11.5-1
11.6 Portland Cement Manufacturing 11.6-1
11.7 Ceramic Products Manufacturing 11.7-1
11.8 Clay And Fly Ash Sintering 11.8-1
11.9 Western Surface Coal Mining 11.9-1
11.10 Coal Cleaning 11.10-1
11.11 Coal Conversion 11.11-1
11.12 Concrete Batching 11.12-1
11.13 Glass Fiber Manufacturing 11.13-1
11.14 Frit Manufacturing 11.14-1
11.15 Glass Manufacturing 11.15-1
11.16 Gypsum Manufacturing 11.16-1
11.17 Lime Manufacturing 11.17-1
11.18 Mineral Wool Manufacturing 11.18-1
11.19 Construction Aggregate Processing 11.19-1
11.19.1 Sand And Gravel Processing 11.19.1-1
11.19.2 Crushed Stone Processing 11.19.2-1
11.20 Lightweight Aggregate Manufacturing 11.20-1
11.21 Phosphate Rock Processing 11.21-1
11.22 Diatomite Processing 11.22-1
11.23 Taconite Ore Processing 11.23-1
11.24 Metallic Minerals Processing 11.24-1
11.25 Clay Processing 11.25-1
11.26 Talc Processing 11.26-1
11.27 Feldspar Processing 11.27-1
11.28 Vermiculite Processing 11.28-1
11.29 Alumina Manufacturing 11.29-1
11.30 Perlite Manufacturing 11.30-1
11.31 Abrasives Manufacturing 11.31-1

12. METALLURGICAL INDUSTRY 12.0-1
12.1 Primary Aluminum Production 12.1-1
12.2 Coke Production 12.2-1
12.3 Primary Copper Smelting 12.3-1
12.4 Ferroalloy Production 12.4-1
12.5 Iron And Steel Production 12.5-1
12.6 Primary Lead Smelting 12.6-1
12.7 Zinc Smelting 12.7-1
12.8 Secondary Aluminum Operations 12.8-1
12.9 Secondary Copper Smelting And Alloying 12.9-1
12.10 Gray Iron Foundries 12.10-1
12.11 Secondary Lead Processing 12.11-1
12.12 Secondary Magnesium Smelting 12.12-1
12.13 Steel Foundries 12.13-1
12.14 Secondary Zinc Processing 12.14-1
12.15 Storage Battery Production 12.15-1
12.16 Lead Oxide And Pigment Production 12.16-1
12.17 Miscellaneous Lead Products 12.17-1

12.18 Leadbearing Ore Crushing And Grinding 12.18-1
12.19 Electric Arc Welding 12.19-1
12.20 Electroplating 12.20-1

13. MISCELLANEOUS SOURCES 13.0-1
13.1 Wildfires And Prescribed Burning 13.1-1
13.2 Fugitive Dust Sources 13.2-1
13.2.1 Paved Roads 13.2.1-1
13.2.2 Unpaved Roads 13.2.2-1
13.2.3 Heavy Construction Operations 13.2.3-1
13.2.4 Aggregate Handling And Storage Piles 13.2.4-1
13.2.5 Industrial Wind Erosion 13.2.5-1
13.3 Explosives Detonation 13.3-1
13.4 Wet Cooling Towers 13.4-1
13.5 Industrial Flares 13.5-1

13. GREENHOUSE GAS BIOGENIC SOURCES 14.0-1
14.1 Emissions From Soils — Greenhouse Gases 14.1-1
14.2 Termites — Greenhouse Gases 14.2-1
14.3 Lightning Emissions — Greenhouse Gases 14.2-1

APPENDIX A
Miscellaneous Data And Conversion Factors A-1

APPENDIX B.1
Particle Size Distribution Data And Sized Emission Factors For Selected Sources B.1-1

APPENDIX B.2
Generalized Particle Size Distributions B.2-1

APPENDIX C.1
Procedures For Sampling Surface/Bulk Dust Loading C.1-1

APPENDIX C.2
Procedures For Laboratory Analysis Of Surface/Bulk Dust Loading Samples C.2-1

KEY WORD INDEX

Chapter/Section

Abrasives Manufacturing 11.31
Acetone And Phenol 6.16
Acid
  Adipic 6.2
  Hydrochloric 8.6
  Hydrofluoric 8.7
  Nitric 8.8
  Phosphoric 8.9
  Sulfuric 8.10
  Terephthalic 6.11
Adipic Acid 6.2
Aggregate Handling 13.2.4
Aggregate Manufacturing, Lightweight 11.20
Aggregate Processing, Construction 11.19
Aggregate Storage Piles 13.2.4
Agricultural Industries 9.0
Agricultural Wind Erosion 9.16
Alcohol, Isopropyl 6.29
Alfalfa Dehydration 9.9.4
Alkali, Chlor- 8.11
Almond Processing 9.10.2.1
Alumina Manufacturing 11.29
Aluminum
  Operations, Secondary 12.8
  Production, Primary 12.1
Ammonia, Synthetic 8.1
Ammonium Nitrate 8.3
Ammonium Phosphate 8.5.3
Ammonium Sulfate 8.4
Analysis, Surface/Bulk Dust Loading ..... App. C.2
Anhydride, Phthalic 6.5
Animal And Meat Products Preparation 9.5
Anthracite Coal Combustion 1.2
Appliance Surface Coating 4.2.2.11
Ash
  Fly Ash Sintering 11.8
Asphalt
  Hot Mix Plants 11.1
  Paving 4.5
  Roofing 11.2
Automobile Body Incineration 2.6
Automobile Surface Coating 4.2.2.8

Bagasse Combustion In Sugar Mills 1.8
Baking, Bread 9.9.6
Bark
  Wood Waste Combustion In Boilers 1.6
Batching, Concrete 11.12
Battery Production, Storage 12.15
Beet Sugar Processing 9.10.1.2
Benzene, Toluene And Xylenes 6.18
Beverages 9.12
  Brandy 9.12.2
  Liquors, Distilled Spirits 9.12.3
  Malt 9.12.1
  Wines 9.12.2
Bituminous Coal Combustion 1.1
Bleaching, Wood Pulp 10.3
Brandy 9.12.2
Bread Baking 9.9.6
Bricks And Related Clay Products 11.3
Bulk Material Analysis Procedures ..... App. C.2
Bulk Material Sampling Procedures ..... App. C.1
Burners, Conical (Teepee) 2.7
Burning, Open 2.5
Burning, Prescribed, And Wildfires 13.1
Business Machines, Plastic Parts Coating 4.2.2.14
Butadiene 6.19

Calcium Carbide Manufacturing 11.4
Can Coating 4.2.2.2
Cane Sugar Processing 9.10.1.1
Canned Fruits And Vegetables 9.8.1
Carbon Black 6.1
Carbonate
  Sodium Carbonate Manufacturing 8.12
Cattle Feedlots 9.4.1
Cement
  Portland Cement Manufacturing 11.6
Ceramic Products Manufacturing 11.7
Cereal Breakfast Food 9.9.2
Charcoal 10.7
Cheese, Natural And Processed 9.6.1
Chemical Wood Pulping 10.2
Chemicals, Inorganic 8.0
Chemicals, Organic 6.0
Chlor-Alkali 8.11
Clay
  Bricks And Related Clay Products 11.3
  Ceramic Products Manufacturing 11.7
  Clay And Fly Ash Sintering 11.8
  Clay Processing 11.25

Cleaning
Coal 11.10
Drum 4.8
Dry Cleaning 4.1
Tank 4.8
Coal
Anthracite Combustion 1.2
Bituminous Combustion 1.1
Cleaning 11.10
Conversion 11.11
Subbituminous Combustion 1.1
Surface Mining, Western 11.9
Coating, Surface 4.2
Appliance, Large 4.2.2.11
Automobile And Light Duty Truck 4.2.2.8
Can 4.2.2.2
Fabric 4.2.2.7
Flat Wood Interior Panel 4.2.2.5
Labels, Pressure Sensitive 4.2.2.9
Magnet Wire 4.2.2.3
Magnetic Tape 4.2.2.13
Metal Coil 4.2.2.10
Metal Furniture 4.2.2.12
Metal, General 4.2.2.4
Paper 4.2.2.6
Plastic Parts For Business Machines 4.2.2.14
Polymeric Coating Of Supporting Substrates 4.2.2.7
Tapes, Pressure Sensitive 4.2.2.9
Coffee Roasting 9.13.2
Coke Manufacturing 12.2
Collection, Waste Water 4.3
Combustion
Anthracite Coal 1.2
Bagasse, In Sugar Mills 1.8
Bituminous Coal 1.1
Fuel Oil 1.3
Internal, Mobile ..... Vol. II
Internal, Stationary 3.0
Lignite 1.7
Liquefied Petroleum Gas 1.5
Natural Gas 1.4
Orchard Heaters 9.2.3
Refuse 2.1
Residential Fireplaces 1.9
Residential Wood Stoves 1.10
Subbituminous Coal 1.1
Waste Oil 1.11
Wood Waste In Boilers 1.6
Compressors, Pipeline, Natural Gas Fired 3.2
Concrete Batching 11.12
Confectionery Products 9.10

Conical Burners 2.7
Construction Aggregate Processing 11.19
Construction Operations, Heavy 13.2.3
Conversion factors, units, etc. – Miscellaneous ..... App. A
Cooling Towers, Wet 13.4
Copper
  Alloying 12.9
  Smelting, Primary 12.3
  Smelting, Secondary 12.9
Corn Wet Milling 9.9.7
Cotton
  Ginning 9.7
  Harvesting 9.3.1
Crushed Stone Processing 11.19.2
Cumene 6.20
Cyanide, Hydrogen 8.14

Dairy Farms 9.4.4
Dairy Products 9.6
Deep Fat Frying, Snack Chip 9.13.3
Degreasing, Solvent 4.6
Dehydrated Fruits And Vegetables 9.8.2
Dehydration, Alfalfa 9.9.4
Detergents
  Soap And Detergents 6.8
Detonation, Explosives 13.3
Diatomite Processing 11.22
Diesel Engines, Industrial 3.3
Diesel Engines, Stationary 3.4
Distilled Spirits 9.12.3
Drum Cleaning 4.8
Dry Cleaning 4.1
Dual Fuel Engines, Stationary 3.4
Dust Loading Analysis, Surface/Bulk ..... App. C.2
Dust Loading Sampling Procedures, Surface/Bulk ..... App. C.1
Dust Sources, Fugitive 13.2

Electric Arc Welding 12.19
Electric Utility Power Plants, Gas 3.1
Electricity Generators, Stationary Gas Turbine 3.1
Electroplating 12.20
Erosion, Wind, Industrial 13.2.5
Ethanol 6.21
Ethyl Benzene 6.22
Ethylene 6.23
Ethylene Dichloride And Vinyl Chloride 6.24
Ethylene Glycol 6.25
Ethylene Oxide 6.26
Evaporation Loss Sources 4.0
Explosives 6.3
Explosives Detonation 13.3

External Combustion Sources 1.0

Fabric Coating 4.2.2.7
Fabric Printing, Textile 4.11
Fats, Cooking 9.11
Feedlots
  Cattle 9.4.1
  Dairy Farms 9.4.4
  Poultry Houses 9.4.3
  Swine 9.4.2
Feldspar Processing 11.27
Ferroalloy Production 12.4
Fertilizer Application 9.2.1
Fertilizers
  Ammonium Phosphate 8.5.3
  Phosphate 8.5
Fiberboard, Medium Density 10.6.3
Fiber Manufacturing, Glass 11.13
Fibers, Synthetic 6.9
Fireplaces, Residential 1.9
Fires
  Forest Wildfires And Prescribed Burning 13.1
Fish Processing 9.13.1
Flares, Industrial 13.5
Flat Wood Interior Panel Coating 4.2.2.5
Fly Ash
  Clay And Fly Ash Sintering 11.8
Food And Agricultural Industries 9.0
Food And Kindred Products, Miscellaneous 9.13
  Coffee Roasting 9.13.2
  Fish Processing 9.13.1
  Snack Chip Deep Fat Frying 9.13.3
  Yeast Production 9.13.4
Formaldehyde 6.27
Foundries
  Gray Iron 12.10
  Steel 12.13
Frit Manufacturing 11.14
Fruits, Preserved 9.8
  Canned 9.8.1
  Dehydrated 9.8.2
Fuel Oil Combustion 1.3
Fugitive Dust Sources 13.2
Furniture Surface Coating, Metal 4.2.2.12

Gas Combustion, Liquefied Petroleum 1.5
Gas, Natural
  Combustion 1.4
  Pipeline Compressors 3.2
  Processing 5.3
  Turbines, Electricity-generating 3.1

Gasoline/Diesel Industrial Engines 3.3
Ginning, Cotton 9.7
Glass Fiber Manufacturing 11.13
Glass Manufacturing 11.15
Graphic Arts 4.9
  General Graphic Printing 4.9.1
  Publication Gravure Printing 4.9.2
Glycerine 6.28
Grain
  Alfalfa Dehydration 9.9.4
  Bread Baking 9.9.6
  Cereal Breakfast Food 9.9.2
  Corn Wet Milling 9.9.7
  Elevators And Processes 9.9.1
  Harvesting 9.3.2
  Pasta Manufacturing 9.9.5
  Pet Food 9.9.3
  Processing 9.9
Gravel Processing 11.19.1
Gray Iron Foundries 12.10
Greenhouse Gas biogenic Sources 14.0
Growing Operations 9.2
Gypsum Manufacturing 11.16

Harvesting Operations 9.3
  Cotton Harvesting 9.3.1
  Grain Harvesting 9.3.2
  Rice Harvesting 9.3.3
  Sugar Cane Harvesting 9.3.4
Heaters, Orchard 9.2.3
Highway Vehicles ..... Vol. II
Hot Mix Asphalt Plants 11.1
Hydrochloric Acid 8.6
Hydrofluoric Acid 8.7
Hydrogen Cyanide 8.14

Incineration
  Automobile Body 2.6
  Medical Waste 2.3
  Open Burning 2.5
  Sewage Sludge 2.2
Industrial Engines, Gasoline And Diesel 3.3
Industrial Flares 13.5
Industrial Surface Coating 4.2.2
Industrial Surface Coating, General 4.2.2.1
Industrial Wind Erosion 13.2.5
Ink, Printing 6.7
Inorganic Chemical Industry 8.0
Interior Panel Coating, Flat Wood 4.2.2.5

Internal Combustion Engines
Highway Vehicle ..... Vol. II
Off-highway Mobile ..... Vol. II
Off-highway Stationary 3.0

Iron
Gray Iron Foundries 12.10
Iron Production 12.5
Isopropyl Alcohol 6.29

Labels, Pressure Sensitive 4.2.2.9
Landfills 2.4
Large Bore Engines 3.4
Lead
Ore Crushing And Grinding 12.18
Processing, Secondary 12.11
Products, Miscellaneous 12.17
Smelting, Primary 12.6
Lead Alkyl 6.12
Lead Oxide Production 12.16
Lead Pigment Production 12.16
Leadbearing Ore Crushing And Grinding 12.18
Leather Tanning 9.15
Light Duty Truck Surface Coating 4.2.2.8
Lightning 14.1
Lightweight Aggregate Manufacturing 11.20
Lignite Combustion 1.7
Lime Manufacturing 11.17
Liquefied Petroleum Gas Combustion 1.5
Liquid Storage Tanks 7.0
Livestock Feed Operations 9.4
Lumber 10.1

Magnesium, Secondary Smelting 12.12
Magnet Wire Coating 4.2.2.3
Magnetic Tape Manufacturing 4.2.2.13
Maleic Anhydride 6.14
Malt Beverages 9.12.1
Manure Processing 9.5.4
Marketing, Petroleum Liquids 5.2
Meat Packing Plants 9.5.1
Meat Products Preparation 9.5
Meat Rendering Plants 9.5.3
Meat Smokehouses 9.5.2
Medical Waste Incineration 2.3
Metal Coating, General 4.2.2.4
Metal Coil Surface Coating 4.2.2.10
Metal Furniture Surface Coating 4.2.2.12
Metallic Minerals Processing 11.24
Metallurgical Industry 12.0
Methanol 6.15

Mineral Products Industry 11.0
Mineral Wool Manufacturing 11.18
Minerals Processing, Metallic 11.24
Mining, Western Surface Coal 11.9
Miscellaneous Sources 13.0
Mobile Sources
  Highway ..... Vol. II
  Off-highway ..... Vol. II

Natural And Processed Cheese 9.6.1
Natural Gas Combustion 1.4
Natural Gas Fired Pipeline Compressors 3.2
Natural Gas Processing 5.3
Nitric Acid Manufacturing 8.8
Nonindustrial Surface Coating 4.2.1
Normal Superphosphates 8.5.1
Nuts And Seeds, Salted And Roasted 9.10.2
  Almond Processing 9.10.2.1
  Peanut Processing 9.10.2.2

Off-highway Mobile Sources ..... Vol. II
Off-highway Stationary Sources 3.0
Oil
  Fuel Oil Combustion 1.3
  Waste Oil Combustion 1.11
Oils, Cooking 9.11
  Vegetable Oil Processing 9.11.1
Open Burning 2.5
Orchard Heaters 9.2.3
Ore Processing
  Leadbearing Ore Crushing And Grinding 12.18
  Taconite 11.23
Organic Chemical Process Industry 6.0
Organic Liquid Storage Tanks 7.1
Oriented Strand Board 10.6.1

Paint And Varnish 6.4
Panel Coating, Flat Wood Interior 4.2.2.5
Paper Coating 4.2.2.6
Papermaking 10.4
Particleboard 10.6.2
Particle size distribution data, factors, generalized ..... App. B.2
Particle size distribution data, factors, selected ..... App. B.1
Pasta Manufacturing 9.9.5
Paved Roads 13.2.1
Paving, Asphalt 4.5
Peanut Processing 9.10.2.2
Perlite Manufacturing 11.30
Pesticide Application 9.2.2
Pet Food 9.9.3

Petroleum
Liquefied Petroleum Gas Combustion 1.5
Liquids, Transportation And Marketing 5.2
Refining 5.1
Storage Of Organic Liquids 7.1
Petroleum Industry 5.0
Pharmaceuticals Production 6.13
Phenol 6.16
Phosphate, Ammonium 8.5.3
Phosphate Fertilizers 8.5
Phosphate Rock Processing 11.21
Phosphoric Acid 8.9
Phthalic Anhydride 6.5
Pickles 9.8.3
Pigment
Lead Oxide And Pigment Production 12.16
Pipeline Compressors, Natural Gas Fired 3.2
Plastic Part Surface Coating, Business Machine 4.2.2.14
Plastics 6.6
Plywood 10.5
Polyester Resin Plastic Products Fabrication 4.4
Poly(ethylene terephthalate) 6.6.2
Polymeric Coating Of Supporting Substrates 4.2.2.7
Polypropylene 6.6.4
Polystyrene 6.6.3
Polyvinyl Chloride 6.6.1
Portland Cement Manufacturing 11.6
Poultry Feed Operations 9.4
Poultry Houses 9.4.3
Poultry Slaughtering 9.5.5
Prescribed Burning, Wildfires And 13.1
Preserved Fruits And Vegetables 9.8
Preserving, Wood 10.8
Printing, General Graphic 4.9.1
Printing, Publication Gravure 4.9.2
Printing, Textile Fabric 4.11
Printing Ink 6.7
Processed Cheese 9.6.1
Propylene 6.17
Pulp Bleaching, Wood 10.3
Pulping, Chemical Wood 10.2

Reclamation, Waste Solvent 4.7
Reconstituted Wood Products 10.6
Recovery, Sulfur 8.13
Refining, Petroleum 5.1
Refractory Manufacturing 11.5
Refuse Combustion 2.1
Rendering Plants, Meat 9.5.3
Residential Fireplaces 1.9
Resin, Polyester, Plastic Product Fabrication 4.4

Rice Harvesting 9.3.3
Roads
  Paved 13.2.1
  Unpaved 13.2.2
Roasted Nuts And Seeds 9.10.2
Roasting, Coffee 9.13.2
Rock Processing, Phosphate 11.21
Roofing, Asphalt 11.2
Rubber, Synthetic 6.10

Salad Dressings 9.8.3
Salted And Roasted Nuts And Seeds 9.10.2
  Almond Processing 9.10.2.1
  Peanut Processing 9.10.2.2
Sampling, Surface/Bulk Loading . . . . . App. C.1
Sand And Gravel Processing 11.19.1
Sauces 9.8.3
Seeds, Salted And Roasted 9.10.2
Sewage Sludge Incineration 2.2
Sized emission factors, generalized . . . . . App. B.2
Sized emission factors, selected . . . . . App. B.1
Smelting
  Primary Copper 12.3
  Primary Lead 12.6
  Secondary Copper Smelting And Alloying 12.9
  Secondary Magnesium 12.12
  Zinc 12.7
Smokehouses, Meat 9.5.2
Snack Chip Deep Fat Frying 9.13.3
Soap And Detergent Manufacturing 6.8
Sodium Carbonate Manufacturing 8.12
Soils 14.1
Solid Waste Disposal 2.0
Solvent
  Commercial/Consumer Use 4.10
  Degreasing 4.6
  Waste, Reclamation 4.7
Stationary Gas Turbines 3.1
Stationary Internal Combustion Sources, Off-highway 3.0
Steel
  Foundries 12.13
  Production 12.5
Stone Processing, Crushed 11.19.2
Storage, Waste Water 4.3
Storage Battery Production 12.15
Storage Piles, Aggregate 13.2.4
Storage Tanks, Liquid 7.0
  Organic Liquid Storage Tanks 7.1
Subbituminous Coal Combustion 1.1
Substrates, Supporting, Polymeric Coating Of 4.2.2.7
Sugar Harvesting, Cane 9.3.4

Sugar Mills, Bagasse Combustion In 1.8
Sugar Processing 9.10.1
Sugar Processing, Beet 9.10.1.2
Sugar Processing, Cane 9.10.1.1
Sulfur Recovery 8.13
Sulfuric Acid 8.10
Surface/Bulk Dust Loading Analysis ..... App. C.2
Surface/Bulk Dust Loading Sampling Procedures ..... App. C.1
Surface Coal Mining, Western 11.9
Surface Coating 4.2
Surface Coating, Industrial 4.2.2
Surface Coating, Nonindustrial 4.2.1
Surface Material Analysis Procedures ..... App. C.2
Surface Material Sampling Procedures ..... App. C.1
Swine Feedlots 9.4.2
Synthetic Ammonia 8.1
Synthetic Fibers 6.9
Synthetic Rubber 6.10

Taconite Ore Processing 11.23
Talc Processing 11.26
Tank And Drum Cleaning 4.8
Tape, Magnetic, Manufacturing 4.2.2.13
Tapes And Labels, Pressure Sensitive 4.2.2.9
Teepee (Conical) Burners 2.7
Terephthalic Acid 6.11
Termites 14.2
Textile Fabric Printing 4.11
Tilling Operations 9.1
Tobacco Products 9.14
Toluene 6.18
Transportation And Marketing Of Petroleum Liquids 5.2
Treatment, Waste Water 4.3
Triple Superphosphates 8.5.2
Truck, Light Duty, Surface Coating, ... 4.2.2.8
Turbines, Natural Gas Fired 3.1

Unpaved Roads 13.2.2
Urea 8.2

Varnish
  Paint And Varnish Manufacturing 6.4
Vegetable Oil Processing 9.11.1
Vegetables, Canned 9.8.1
Vegetables, Dehydrated 9.8.2
Vegetables, Preserved 9.8
Vehicles, Highway And Off-highway ..... Vol. II
Vermiculite Processing 11.28
Vinyl Chloride 6.24

Waferboard 10.6.1
Waste Disposal, Solid 2.0
Waste Oil Combustion 1.11
Waste Solvent Reclamation 4.7
Waste Water Collection, Treatment and Storage 4.3
Welding, Electric Arc 12.19
Wet Cooling Towers 13.4
Wet Milling, Corn 9.9.7
Wildfires 13.1
Wind Erosion
  Agricultural 9.16
  Industrial 13.2.5
Wines 9.12.2
Wire Coating, Magnet 4.2.2.3
Wood
  Charcoal 10.7
  Flat Interior Panel Coating 4.2.2.5
  Lumber 10.1
  Medium Density Fiberboard 10.6.3
  Oriented Strand Board 10.6.1
  Papermaking 10.4
  Particleboard 10.6.2
  Plywood 10.5
  Pulp Bleaching 10.3
  Pulping, Chemical 10.2
  Reconstituted Wood Products 10.6
  Stoves 1.10
  Waferboard 10.6.1
  Waste Combustion In Boilers 1.6
  Wood Preserving 10.8
Wood Products Industry 10.0

Xylenes 6.18

Yeast Production 9.13.4

Zinc
  Processing, Secondary 12.14
  Smelting 12.7

INTRODUCTION

Emission factors and emission inventories have long been fundamental tools for air quality management. Emission estimates are important for developing emission control strategies, determining applicability of permitting and control programs, ascertaining the effects of sources and appropriate mitigation strategies, and a number of other related applications by an array of users, including federal, state, and local agencies, consultants, and industry. Data from source-specific emission tests or continuous emission monitors are usually preferred for estimating a source's emissions because those data provide the best representation of the tested source's emissions. However, test data from individual sources are not always available and, even then, they may not reflect the variability of actual emissions over time. Thus, emission factors are frequently the best or only method available for estimating emissions, in spite of their limitations.

The passage of the *Clean Air Act Amendments Of 1990* (*CAAA*) and the *Emergency Planning And Community Right-To-Know Act* (*EPCRA*) of 1986 has increased the need for both criteria and Hazardous air pollutant (HAP) emission factors and inventories. The Emission Factor And Inventory Group (EFIG), in the U. S. Environmental Protection Agency's (EPA) Office Of Air Quality Planning And Standards (OAQPS), develops and maintains emission estimating tools to support the many activities mentioned above. The AP-42 series is the principal means by which EFIG can document its emission factors. These factors are cited in numerous other EPA publications and electronic data bases, but without the process details and supporting reference material provided in AP-42.

What Is An AP-42 Emission Factor?

An emission factor is a representative value that attempts to relate the quantity of a pollutant released to the atmosphere with an activity associated with the release of that pollutant. These factors are usually expressed as the weight of pollutant divided by a unit weight, volume, distance, or duration of the activity emitting the pollutant (e. g., kilograms of particulate emitted per megagram of coal burned). Such factors facilitate estimation of emissions from various sources of air pollution. In most cases, these factors are simply averages of all available data of acceptable quality, and are generally assumed to be representative of long-term averages for all facilities in the source category (i. e., a population average).

The general equation for emission estimation is:

$$E = A \times EF \times (1-ER/100)$$

where:

E = emissions,
A = activity rate,
EF = emission factor, and
ER = overall emission reduction efficiency, %.

ER is further defined as the product of the control device destruction or removal efficiency and the capture efficiency of the control system. When estimating emissions for a long time period

(e. g., one year), both the device and the capture efficiency terms should account for upset periods as well as routine operations.

Emission factor ratings in AP-42 (discussed below) provide indications of the robustness, or appropriateness, of emission factors for estimating average emissions for a source activity. Usually, data are insufficient to indicate the influence of various process parameters such as temperature and reactant concentrations. For a few cases, however, such as in estimating emissions from petroleum storage tanks, this document contains empirical formulae (or emission models) that relate emissions to variables such as tank diameter, liquid temperature, and wind velocity. Emission factor formulae that account for the influence of such variables tend to yield more realistic estimates than would factors that do not consider those parameters.

The extent of completeness and detail of the emissions information in AP-42 is determined by the information available from published references. Emissions from some processes are better documented than others. For example, several emission factors may be listed for the production of one substance: one factor for each of a number of steps in the production process such as neutralization, drying, distillation, and other operations. However, because of less extensive information, only one emission factor may be given for production facility releases for another substance, though emissions are probably produced during several intermediate steps. There may be more than one emission factor for the production of a certain substance because differing production processes may exist, or because different control devices may be used. Therefore, it is necessary to look at more than just the emission factor for a particular application and to observe details in the text and in table footnotes.

The fact that an emission factor for a pollutant or process is not available from EPA does not imply that the Agency believes the source does not emit that pollutant or that the source should not be inventoried, but it is only that EPA does not have enough data to provide any advice.

Uses Of Emission Factors

Emission factors may be appropriate to use in a number of situations such as making source-specific emission estimates for areawide inventories. These inventories have many purposes including ambient dispersion modeling and analysis, control strategy development, and in screening sources for compliance investigations. Emission factor use may also be appropriate in some permitting applications, such as in applicability determinations and in establishing operating permit fees.

Emission factors in AP-42 are neither EPA-recommended emission limits (e. g., best available control technology or BACT, or lowest achievable emission rate or LAER) nor standards (e. g., National Emission Standard for Hazardous Air Pollutants or NESHAP, or New Source Performance Standards or NSPS). Use of these factors as source-specific permit limits and/or as emission regulation compliance determinations is not recommended by EPA. Because emission factors essentially represent an average of a range of emission rates, approximately half of the subject sources will have emission rates greater than the emission factor and the other half will have emission rates less than the factor. As such, a permit limit using an AP-42 emission factor would result in half of the sources being in noncompliance.

Also, for some sources, emission factors may be presented for facilities having air pollution control equipment in place. Factors noted as being influenced by control technology do not necessarily reflect the best available or state-of-the-art controls, but rather reflect the level of (typical) control for which data were available at the time the information was published. Sources often are

tested more frequently when they are new and when they are believed to be operating properly, and either situation may bias the results.

As stated, source-specific tests or continuous emission monitors can determine the actual pollutant contribution from an existing source better than can emission factors. Even then, the results will be applicable only to the conditions existing at the time of the testing or monitoring. To provide the best estimate of longer-term (e. g., yearly or typical day) emissions, these conditions should be representative of the source's routine operations.

A material balance approach also may provide reliable average emission estimates for specific sources. For some sources, a material balance may provide a better estimate of emissions than emission tests would. In general, material balances are appropriate for use in situations where a high percentage of material is lost to the atmosphere (e. g., sulfur in fuel, or solvent loss in an uncontrolled coating process.) In contrast, material balances may be inappropriate where material is consumed or chemically combined in the process, or where losses to the atmosphere are a small portion of the total process throughput. As the term implies, one needs to account for all the materials going into and coming out of the process for such an emission estimation to be credible.

If representative source-specific data cannot be obtained, emissions information from equipment vendors, particularly emission performance guarantees or actual test data from similar equipment, is a better source of information for permitting decisions than an AP-42 emission factor. When such information is not available, use of emission factors may be necessary as a last resort. Whenever factors are used, one should be aware of their limitations in accurately representing a particular facility, and the risks of using emission factors in such situations should be evaluated against the costs of further testing or analyses.

Figure 1 depicts various approaches to emission estimation, in a hierarchy of requirements and levels of sophistication, that one should consider when analyzing the tradeoffs between cost of the estimates and the quality of the resulting estimates. Where risks of either adverse environmental effects or adverse regulatory outcomes are high, more sophisticated and more costly emission determination methods may be necessary. Where the risks of using a poor estimate are low, and the costs of more extensive methods are unattractive, then less expensive estimation methods such as emission factors and emission models may be both satisfactory and appropriate. In cases where no emission factors are available but adverse risk is low, it may even be acceptable to apply factors from similar source categories using engineering judgment. Selecting the method to be used to estimate source-specific emissions may warrant a case-by-case analysis considering the costs and risks in the specific situation. All sources and regulatory agencies should be aware of these risks and costs and should assess them accordingly.

Variability Of Emissions

Average emissions differ significantly from source to source and, therefore, emission factors frequently may not provide adequate estimates of the average emissions for a specific source. The extent of between-source variability that exists, even among similar individual sources, can be large depending on process, control system, and pollutant. Although the causes of this variability are considered in emission factor development, this type of information is seldom included in emission test reports used to develop AP-42 factors. As a result, some emission factors are derived from tests that may vary by an order of magnitude or more. Even when the major process variables are accounted for, the emission factors developed may be the result of averaging source tests that differ by factors of five or more.

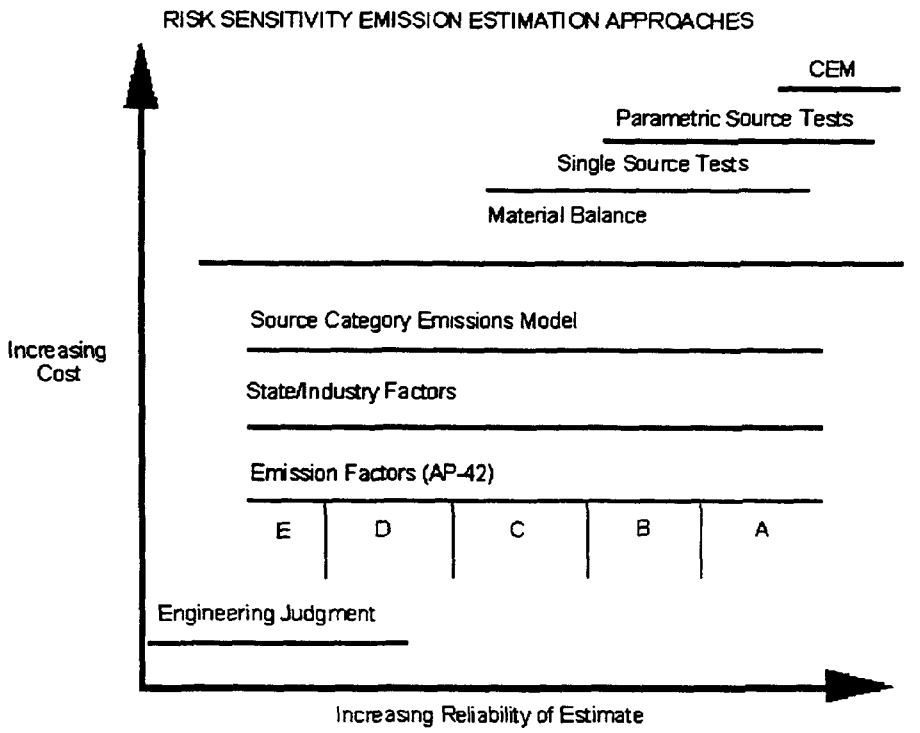

Figure 1. Approach to emission estimation.

Air pollution control devices also may cause differing emission characteristics. The design criteria of air pollution control equipment affect the resulting emissions. Design criteria include such items as the type of wet scrubber used, the pressure drop across a scrubber, the plate area of an electrostatic precipitator, and the alkali feed rate to an acid gas scrubber. Often, design criteria are not included in emission test reports (at least not in a form conducive to detailed analysis of how varying process parameters can affect emissions) and therefore may not be accounted for in the resulting factors.

Before simply applying AP-42 emission factors to predict emissions from new or proposed sources, or to make other source-specific emission assessments, the user should review the latest literature and technology to be aware of circumstances that might cause such sources to exhibit emission characteristics different from those of other, typical existing sources. Care should be taken to assure that the subject source type and design, controls, and raw material input are those of the source(s) analyzed to produce the emission factor. This fact should be considered, as well as the age of the information and the user's knowledge of technology advances.

Estimates of short-term or peak (e. g., daily or hourly) emissions for specific sources are often needed for regulatory purposes. Using emission factors to estimate short-term emissions will add further uncertainty to the emission estimate. Short-term emissions from a single specific source often vary significantly with time (i. e., within-source variability) because of fluctuations in process operating conditions, control device operating conditions, raw materials, ambient conditions, and other such factors. Emission factors generally are developed to represent long-term average emissions, so testing is usually conducted at normal operating conditions. Parameters that can cause short-term fluctuations in emissions are generally avoided in testing and are not taken into account in test evaluation. Thus, using emission factors to estimate short-term emissions will cause even greater

uncertainty. The AP-42 user should be aware of this limitation and should evaluate the possible effects on the particular application.

To assess within-source variability and the range of short-term emissions from a source, one needs either a number of tests performed over an extended period of time or continuous monitoring data from an individual source. Generally, material balance data are not likely to be sufficient for assessing short-term emission variability because the accuracy of a material balance is greatly reduced for shorter time intervals. In fact, one of the advantages of a material balance approach is that it averages out all of the short-term fluctuations to provide a good long-term average.

Pollutant Terminology And Conventions

The need for clearly and precisely defined terms in AP-42 should be evident to all. The factors in this document represent units of pollutants (or for ozone, precursors) for which there are National Ambient Air Quality Standards (NAAQS). These are often referred to as "criteria" pollutants. Factors may be presented also for HAPs ("hazardous" air pollutants designated in the *Clean Air Act*) and for other "regulated" and unregulated air pollutants. If the pollutants are organic compounds or particulate matter, additional species or analytical information may be needed for specific applications. It is often the case that the ideal measure of a pollutant for a specific application may not be available, or even possible, because of test method or data limitations, costs, or other problems. When such qualifications exist in AP-42, they will be noted in the document. If a pollutant is not mentioned in AP-42, that does not necessarily mean that the pollutant is not emitted.

Many pollutants are defined by their chemical names, which often may have synonyms and trade names. Trade names are often given to mixtures to obscure proprietary information, and the same components may have several trade names. For assurance of the use of the proper chemical identification, the Chemical Abstract Service (CAS) number for the chemical should be consulted along with the list of synonyms. Some pollutants, however, follow particular conventions when used in air quality management practices. The pollutant terminology and conventions currently used in AP-42 are discussed below.

Particulate Matter -

Terms commonly associated with the general pollutant, "particulate matter" (PM), include PM-10, PM-X, total particulate, total suspended particulate (TSP), primary particulate, secondary particulate, filterable particulate, and condensable particulate. TSP consists of matter emitted from sources as solid, liquid, and vapor forms, but existing in the ambient air as particulate solids or liquids. Primary particulate matter includes that solid, liquid, or gaseous material at the pressure and temperature in the process or stack that would be expected to become a particulate at ambient temperature and pressure. AP-42 contains emission factors for pollutants that are expected to be primary particulate matter. Primary particulate matter includes matter that may eventually revert to a gaseous condition in the ambient air, but it does not include secondary particulate matter. Secondary particulate matter is gaseous matter that may eventually convert to particulate matter through atmospheric chemical reactions. The term "total particulate" is used in AP-42 only to describe the emissions that are primary particulate matter. The term "Total PM-X" is used in AP-42 to describe those emissions expected to become primary particulate matter smaller than "X" micrometers (μm) in aerodynamic diameter. For example, "PM-10" is emitted particulate matter less than 10 μm in diameter. In AP-42, "Total Particulate" and "Total PM-X" may be divided into "Filterable Particulate", "Filterable PM-X", "Condensable Organic Particulate", and "Condensable Inorganic Particulate". The filterable portions include that material that is smaller than the stated size and is collected on the filter of the particulate sampling train.

Unless noted, it is reasonable to assume that the emission factors in AP-42 for processes that operate above ambient temperatures are for filterable particulate, as defined by EPA Method 5 or its equivalent (a filter temperature of 121°C (250°F). The condensable portions of the particulate matter consist of vaporous matter at the filter temperature that is collected in the sampling train impingers and is analyzed by EPA Method 202 or its equivalent. AP-42 follows conventions in attempts to define Total Particulate and its subcomponents, filterable particulate, condensable particulate, and

PM-10 and their interrelationships. Because of test method and data limitations, this attempt may not always be successful, and some sources may not generate such components.

Because emission factors in AP-42 are usually based upon the results of emission test reports, and because Method 202 was only recently developed, AP-42 emission factors often may adequately characterize only in-stack filterable PM-10. Recent parts of the AP-42 series have used a clearer nomenclature for the various particulate fractions. It is reasonable to assume that, where AP-42 does not define the components of particulate clearly and specifically, the PM-10 factor includes only the filterable portion of the total PM-10. Therefore, an evaluation of potential condensable particulate emissions should be based upon additional data or engineering judgment.

As an additional convention, users should note that many hazardous or toxic compounds may be emitted in particulate form. In such cases, AP-42 factors for particulate matter represent the total, and factors for such compounds or elements are reported as mass of that material.

Organic Compounds -

Precursors of the criteria pollutant "ozone" include organic compounds. "Volatile organic compounds" (VOC) are required in a State Implementation Plan (SIP) emission inventory. VOCs have been defined by EPA (40 CFR 51.100, February 3, 1992) as "any compound of carbon, excluding carbon monoxide, carbon dioxide, carbonic acid, metallic carbides or carbonates, and ammonium carbonate, which participates in atmospheric chemical reactions". There are a number of compounds deemed to have "negligible photochemical reactivity", and these are therefore exempt from the definition of VOC. These exempt compounds include methane, ethane, methylene chloride, methyl chloroform, many chlorofluorocarbons, and certain classes of perfluorocarbons. Additional compounds may be added to the exempt list in the future.

Though the regulatory definition of VOC is followed in ozone control programs, the exempt organic compounds are of concern when developing the complete emission inventory that is needed for broader applications. Therefore, this document strives to report the total organic emissions and component species, so that the user may choose those that are necessary for a particular application. In many cases, data are not available to identify and quantify either all the components (such as some oxygenated compounds that are not completely measured by many common test methods), the total organics, or other variations of the quantities desired. In such cases, the available information is annotated in an effort to provide the data to the user in a clear and unambiguous manner. It is not always possible to present a complete picture with the data that are available.

The term "total organic compounds" (TOC) is used in AP-42 to indicate all VOCs and all exempted organic compounds including methane, ethane, chlorofluorocarbons, toxics and HAPs, aldehydes, and semivolatile compounds. Component species are separately identified and quantified, if data are available, and these component species are included in TOCs. Often, a test method will produce a data set that excludes methane. In such cases, the term total nonmethane organic compound (TNMOC) may be used. Here, methane will be separately quantified if the data are available. Factors are nominally given in terms of actual weight of the emitted substance. However, in some cases where data do not allow calculation of the result in this form, factors may be given "as

methane", "as propane", etc. Once the species distribution is determined, actual mass can be calculated based on molecular weight of each compound represented. In an AP-42 table giving organic emission factors, the ideal table headings would be:

TOC	Methane	Ethane	VOC	Other Species

Many organic compounds are also HAPs. Where such species can be quantified, an emission factor representing their individual mass will be presented. This quantity will also be included in the total VOC and/or TOC factors, as appropriate. To avoid double counting regarding permit fees, etc., this fact should be taken into consideration.

Sulfur Dioxide -

The primary product from combustion of sulfur is sulfur dioxide, SO_2. However, other oxidation states are usually formed. When reported in this document, these compounds are jointly referred to as SO_x, or oxides of sulfur. SO_2 means sulfur dioxide, and SO_x means the combination of all such emissions reported on the basis of the molecular weight of SO_2.

Oxides Of Nitrogen -

The primary combustion product of nitrogen is nitrogen dioxide, NO_2. However, several other nitrogen compounds are usually emitted at the same time (nitric oxide or NO, nitrous oxide or N_2O, etc.), and these may or may not be distinguishable in available test data. They are usually in a rapid state of flux, with NO_2 being, in the short term, the ultimate product emitted or formed shortly downstream of the stack. The convention followed in AP-42 is to report the distinctions wherever possible, but to report total NO_x on the basis of the molecular weight of NO_2.

Lead -

Lead is emitted and measured as particulate and often will be reported for a process both separately and as a component of the particulate matter emission factor. The lead may exist as pure metal or as compounds. The convention followed in AP-42 is that all emissions of lead are expressed as the weight of the elemental lead. Lead compounds will also be reported on the basis of the weight of those compounds if the information is available.

Toxic, Hazardous, And Other Noncriteria Pollutants -

Hazardous Air Pollutants are defined for EPA regulatory purposes in Title III of the *CAAA*. However, many states and other authorities designate additional toxic or hazardous compounds, organic or inorganic, that can exist in gaseous or particulate form. Also, as mentioned, compounds emitted as VOCs may be of interest for their participation in photochemical reactivity. Few EPA Reference Test Methods exist for these compounds, which may come from the myriad sources covered in this document. However, test methods are available to allow reasonably reliable quantification of many compounds, and adequate test results are available to yield estimates of sufficient quality to be included in this document. Where such compounds are quantified herein with emission factors, they represent the actual mass of that compound emitted. Totals for PM or VOC, as appropriate, are inclusive of the component species unless otherwise noted. There are a limited number of gaseous hazardous or toxic compounds that may not be VOCs, and whenever they occur they will be identified separately.

The Emission Factor And Inventory Group produces a separate series of reports that focus on a number of the more significant HAPs and related sources. Titles of these documents generally follow the format of *Locating And Estimating Emissions From Sources Of . . . (Substance).*

Examples Of Emission Factor Application -

Calculating carbon monoxide (CO) emissions from distillate oil combustion serves as an example of the simplest use of emission factors. Consider an industrial boiler that burns 90,000 liters of distillate oil per day. In Section 1.3 of AP-42, "Fuel Oil Combustion", the CO emission factor for industrial boilers burning distillate oil is 0.6 kilograms (kg) CO per 10^3 liters of oil burned.

Then CO emissions

= CO emission factor x distillate oil burned/day
= 0.6 x 90
= 54 kg/day

In a more complex case, suppose a sulfuric acid (H_2SO_4) plant produces 200 Mg of 100 percent H_2SO_4 per day by converting sulfur dioxide (SO_2) into sulfur trioxide (SO_3) at 97.5 percent efficiency. In Section 8.10, "Sulfuric Acid", the SO_2 emission factors are listed according to SO_2-to-SO_3 conversion efficiencies in whole numbers. The reader is directed by footnote to an interpolation formula that may be used to obtain the emission factor for 97.5 percent SO_2-to-SO_3 conversion.

The emission factor for kg SO_2/Mg 100% H_2SO_4

= 682 - [(6.82)(% SO_2-to-SO_3 conversion)]
= 682 - [6.82)(97.5)]
= 682 - 665
= 17 kg

In the production of 200 Mg of 100 percent H_2SO_4 per day, SO_2 emissions are calculated thus:

SO_2 emissions
= 17 kg SO_2 emissions/Mg 100 percent H_2SO_4 x 200 Mg 100 percent H_2SO_4/day
= 3400 kg/day

Emission Factor Ratings

Each AP-42 emission factor is given a rating from A through E, with A being the best. A factor's rating is a general indication of the reliability, or robustness, of that factor. This rating is assigned based on the estimated reliability of the tests used to develop the factor and on both the amount and the representative characteristics of those data. In general, factors based on many observations, or on more widely accepted test procedures, are assigned higher rankings. Conversely, a factor based on a single observation of questionable quality, or one extrapolated from another factor for a similar process, would probably be rated much lower. Because ratings are subjective and only indirectly consider the inherent scatter among the data used to calculate factors, the ratings should be seen only as approximations. AP-42 factor ratings do not imply statistical error bounds or confidence intervals about each emission factor. At most, a rating should be considered an indicator of the accuracy and precision of a given factor being used to estimate emissions from a large number of sources. This indicator is largely a reflection of the professional judgment of AP-42 authors and reviewers concerning the reliability of any estimates derived with these factors.

Because emission factors can be based on source tests, modeling, mass balance, or other information, factor ratings can vary greatly. Some factors have been through more rigorous quality assurance than others.

Two steps are involved in factor rating determination. The first step is an appraisal of data quality, the reliability of the basic emission data that will be used to develop the factor. The second step is an appraisal of the ability of the factor to stand as a national annual average emission factor for that source activity.

Test data quality is rated A through D, and ratings are thus assigned:

A = Tests are performed by a sound methodology and are reported in enough detail for adequate validation.
B = Tests are performed by a generally sound methodology, but lacking enough detail for adequate validation.
C = Tests are based on an unproven or new methodology, or are lacking a significant amount of background information.
D = Tests are based on a generally unacceptable method, but the method may provide an order-of-magnitude value for the source.

The quality rating of AP-42 data helps identify good data, even when it is not possible to extract a factor representative of a typical source in the category from those data. For example, the data from a given test may be good enough for a data quality rating of "A", but the test may be for a unique feed material, or the production specifications may be either more or less stringent than at the typical facility.

The AP-42 emission factor rating is an overall assessment of how good a factor is, based on both the quality of the test(s) or information that is the source of the factor and on how well the factor represents the emission source. Higher ratings are for factors based on many unbiased observations, or on widely accepted test procedures. For example, ten or more source tests on different randomly selected plants would likely be assigned an "A" rating if all tests are conducted using a single valid reference measurement method. Likewise, a single observation based on questionable methods of testing would be assigned an "E", and a factor extrapolated from higher-rated factors for similar processes would be assigned a "D" or an "E".

AP-42 emission factor quality ratings are thus assigned:

A — Excellent. Factor is developed from A- and B-rated source test data taken from many randomly chosen facilities in the industry population. The source category population is sufficiently specific to minimize variability.

B — Above average. Factor is developed from A- or B-rated test data from a "reasonable number" of facilities. Although no specific bias is evident, it is not clear if the facilities tested represent a random sample of the industry. As with an A rating, the source category population is sufficiently specific to minimize variability.

C — Average. Factor is developed from A-, B-, and/or C-rated test data from a reasonable number of facilities. Although no specific bias is evident, it is not clear if the facilities tested represent a random sample of the industry. As with the A rating, the source category population is sufficiently specific to minimize variability.

D — Below average. Factor is developed from A-, B- and/or C-rated test data from a small number of facilities, and there may be reason to suspect that these facilities do not represent a random sample of the industry. There also may be evidence of variability within the source population.

E — Poor. Factor is developed from C- and D-rated test data, and there may be reason to suspect that the facilities tested do not represent a random sample of the industry. There also may be evidence of variability within the source category population.

Public Review Of Emission Factors

Since AP-42 emission factors may have effects on most aspects of air pollution control and air quality management including operating permit fees, compliance assessments, and SIP attainment emission inventories, these factors are always made available for public review and comment before publication. The Emission Factor And Inventory Group panel of public and peer reviewers includes representatives of affected industries, state and local air pollution agencies, and environmental groups. More information on AP-42 review procedures is available in the document, *Public Participation Procedures For EPA's Emission Estimation Guidance Materials*, EPA-454/R-94-022, July 1994. This publication is available on EFIG's *CHIEF* (Clearinghouse For Inventories And Emission Factors) electronic bulletin board (BB) and its *Fax CHIEF*, an automated facsimile machine. It is also available in conventional paper copy from the National Technical Information Service (NTIS). The Agency encourages all interested parties to take every opportunity to review factors and to provide information for factor quality improvement. Toward this objective, EFIG invites comments and questions about AP-42, and users are invited to submit any data or other information in accordance with this procedures document.

Other Ways To Obtain AP-42 Information And Updates

All or part of AP-42 can be downloaded either from the *CHIEF* BB or *Fax CHIEF*, and it is available on the *Air CHIEF* CD-ROM (Compact Disc - Read Only Memory). AP-42 is available in conventional paper copy from the Government Printing Office and NTIS, as well as through the *Fax CHIEF*.

The emission factors contained in AP-42 are available in the *Factor Information Retrieval System* (*FIRE*). Also, software has been developed for emission models such as *TANKS*, *WATER7*, the *Surface Impoundment Modeling System* (*SIMS*), and fugitive dust models. This software and the *FIRE* data base are available through the *CHIEF* BB. *FIRE* is also on the *Air CHIEF* compact disc. The *Fax CHIEF* and the *CHIEF* BB will always contain the latest factor information, as they are updated frequently, whereas *Air CHIEF*, the *FIRE* program, and printed AP-42 portions are routinely updated only once per year.

For information or assistance regarding the availability or use of any of these tools and services, an AP-42 telephone help desk, *Info CHIEF*, is available at (919) 541-5285.

1. EXTERNAL COMBUSTION SOURCES

External combustion sources include steam/electric generating plants, industrial boilers, and commercial and domestic combustion units. Coal, fuel oil, and natural gas are the major fossil fuels used by these sources. Liquefied petroleum fuels are also used in relatively small quantities. Coal, oil, and natural gas currently supply about 95 percent of the total thermal energy consumed in the United States. Nationwide consumption in 1980 was over 530 x 10^6 megagrams (585 million tons) of bituminous coal, nearly 3.6 x 10^6 megagrams (4 million tons) of anthracite coal, 91 x 10 liters (24 billion gallons) of distillate oil, 114 x 10^9 liters (37 billion gallons) of residual oil, and 57 x 10^{12} cubic meters (20 trillion cubic feet) of natural gas.

Power generation, process heating, and space heating are some of the largest fuel combustion sources of sulfur oxides, nitrogen oxides, and particulate emissions. The following sections present emission factor data on the major fossil fuels and others.

1.1 Bituminous And Subbituminous Coal Combustion

1.1.1 General

Coal is a complex combination of organic matter and inorganic mineral matter formed over eons from successive layers of fallen vegetation. Coals are classified by rank according to their progressive alteration in the natural metamorphosis from lignite to anthracite. Coal rank depends on the volatile matter, fixed carbon, inherent moisture, and oxygen, although no single parameter defines a rank. Typically, coal rank increases as the amount of fixed carbon increases and the amount of volatile matter and moisture decreases.

Bituminous coals are by far the largest group and are characterized as having lower fixed carbon and higher volatile matter than anthracite. The key distinguishing characteristics of bituminous coal are its relative volatile matter and sulfur content as well as its slagging and agglomerating characteristics. Subbituminous coals have higher moisture and volatile matter and lower sulfur content than bituminous coals and may be used as an alternative fuel in some boilers originally designed to burn bituminous coals.[1] Generally, bituminous coals have heating values of 10,500 to 14,000 British thermal units per pound (Btu/lb) on a wet, mineral-matter-free basis.[2] As mined, the heating values of typical U.S. bituminous coals range from 10,720 to 14,730 Btu/lb.[3] The heating values of subbituminous coals range from 8,300 to 11,500 Btu/lb on a wet, mineral-matter-free basis[2], and from 9,420 to 10,130 Btu/lb on an as-mined basis.[3] Formulae and tables for classifying coals are given in Reference 2.

1.1.2 Firing Practices[4]

Coal-fired boilers can be classified by type, fuel, and method of construction. Boiler types are identified by the heat transfer method (watertube, firetube, or cast iron), the arrangement of the heat transfer surfaces (horizontal or vertical, straight or bent tube), and the firing configuration (suspension, stoker, or fluidized bed). The most common heat transfer method for coal-fired boilers is the watertube method in which the hot combustion gases contact the outside of the heat transfer tubes, while the boiler water and steam are contained within the tubes.

Coal-fired watertube boilers include pulverized coal, cyclone, stoker, fluidized bed, and handfed units. In stoker-fired systems and most handfed units, the fuel is primarily burned on the bottom of the furnace or on a grate. In a fluidized bed combustor (FBC), the coal is introduced to a bed of either sorbent or inert material (usually sand) which is fluidized by an upward flow of air. In pulverized coal-fired (PC-fired) boilers, the fuel is pulverized to the consistency of talcum powder (i.e., at least 70 percent of the particles will pass through a 200-mesh sieve) and pneumatically injected through the burners into the furnace. Combustion in PC-fired units takes place almost entirely while the coal is suspended in the furnace volume. PC-fired boilers are classified as either dry bottom or wet bottom (also referred to as slag tap furnaces), depending on whether the ash is removed in a solid or molten state. In dry bottom furnaces, coals with high fusion temperatures are burned, resulting in dry ash. In wet bottom furnaces, coals with low fusion temperatures are used, resulting in molten ash or slag.

Depending upon the type and location of the burners and the direction of coal injection into the furnace, PC-fired boilers can also be classified into two different firing types, including wall, and tangential. Wall-fired boilers can be either single wall-fired, with burners on only one wall of the furnace firing horizontally, or opposed wall-fired, with burners mounted on two opposing walls.

Tangential (or corner-fired) boilers have burners mounted in the corners of the furnace. The fuel and air are injected tangent to an imaginary circle in the plane of the boilers. Cyclone furnaces are often categorized as PC-fired systems even though the coal is crushed to a maximum size of about 4-mesh. The coal is fed tangentially, with primary air, into a horizonal cylindrical furnace. Smaller coal particles are burned in suspension while larger particles adhere to the molten layer of slag on the combustion chamber wall. Cyclone boilers are high-temperature, wet-bottom type systems.

Stoker-fired systems account for the vast majority of coal-fired watertube boilers for industrial, commercial, and institutional applications. Most packaged stoker units designed for coal firing are small and can be divided into three groups: underfeed stokers, overfeed stokers, and spreader stokers. Underfeed stokers are generally either the horizontal-feed, side-ash-discharge type or the gravity-feed, rear-ash-discharge type. An overfeed stoker uses a moving grate assembly in which coal is fed from a hopper onto a continuous grate which conveys the fuel into the furnace. In a spreader stoker, mechanical or pneumatic feeders distribute coal uniformly over the surface of a moving grate. The injection of the fuel into the furnace and onto the grate combines suspension burning with a thin, fast-burning fuel bed. The amount of fuel burned in suspension depends primarily on fuel size and composition, and air flow velocity. Generally, fuels with finer size distributions, higher volatile matter contents, and lower moisture contents result in a greater percentage of combustion and corresponding heat release rates in suspension above the bed.

FBCs, while not constituting a significant percentage of the total boiler population, have nonetheless gained popularity in the last decade, and today generate steam for industries, cogenerators, independent power producers, and utilities. There are two major categories of FBC systems: (1) atmospheric, operating at or near ambient pressures, and (2) pressurized, operating from 4 to 30 atmospheres (60 to 450 pounds per square inch gauge). At this time, atmospheric FBCs are more advanced (or commercialized) than pressurized FBCs. The two principal types of atmospheric FBCs are bubbling bed and circulating bed. The feature that varies most fundamentally between these two types is the fluidization velocity. In the bubbling bed design, the fluidation velocity is relatively low in order to minimize solids carryover or elutriation from the combustor. Circulating FBCs, however, employ high fluidization velocities to promote the carryover or circulation of the solids. High-temperature cyclones are used in circulating FBCs and in some bubbling FBCs to capture the solid fuel and bed material for return to the primary combustion chamber. The circulating FBC maintains a continuous, high-volume recycle rate which increases the residence time compared to the bubbling bed design. Because of this feature, circulating FBCs often achieve higher combustion efficiencies and better sorbent utilization than bubbling bed units.

Small, coal-fired boilers and furnaces are found in industrial, commercial, institutional, or residential applications and are sometimes capable of being hand-fired. The most common types of firetube boilers used with coal are the horizontal return tubular (HRT), Scotch, vertical, and the firebox. Cast iron boilers are also sometimes available as coal-fired units in a handfed configuration. The HRT boilers are generally fired with gas or oil instead of coal. The boiler and furnace are contained in the same shell in a Scotch or shell boiler. Vertical firetube boilers are typically small singlepass units in which the firetubes come straight up from the water-cooled combustion chamber located at the bottom of the unit. A firebox boiler is constructed with an internal steel-encased, water-jacketed firebox. Firebox firetube boilers are also referred to as locomotive, short firebox, and compact firebox boilers and employ mechanical stokers or are hand-fired.

1.1.3 Emissions[4]

Emissions from coal combustion depend on the rank and composition of the fuel, the type and size of the boiler, firing conditions, load, type of control technologies, and the level of equipment maintenance. The major pollutants of concern from bituminous and subbituminous coal combustion are particulate matter (PM), sulfur oxides (SO_x), and nitrogen oxides (NO_x). Some unburned combustibles, including carbon monoxide (CO) and numerous organic compounds, are generally emitted even under proper boiler operating conditions.

1.1.3.1 Particulate Matter[4] -

PM composition and emission levels are a complex function of boiler firing configuration, boiler operation, pollution control equipment, and coal properties. Uncontrolled PM emissions from coal-fired boilers include the ash from combustion of the fuel as well as unburned carbon resulting from incomplete combustion. In pulverized coal systems, combustion is almost complete; thus, the emitted PM is primarily composed of inorganic ash residues.

Coal ash may either settle out in the boiler (bottom ash) or entrained in the flue gas (fly ash). The distribution of ash between the bottom ash and fly ash fractions directly affects the PM emission rate and depends on the boiler firing method and furnace type (wet or dry bottom). Boiler load also affects the PM emissions as decreasing load tends to reduce PM emissions. However, the magnitude of the reduction varies considerably depending on boiler type, fuel, and boiler operation.

Soot blowing is also a source of intermittent PM emissions in coal-fired boilers. Steam soot and air soot blowing is periodically used to dislodge ash from heat transfer surfaces in the furnace, convective section, economizer, and air preheater.

Particulate emissions may be categorized as either filterable or condensable. Filterable emissions are generally considered to be the particles that are trapped by the glass fiber filter in the front half of a Reference Method 5 or Method 17 sampling train. Vapors and particles less than 0.3 microns pass through the filter. Condensable particulate matter is material that is emitted in the vapor state which later condenses to form homogeneous and/or heterogeneous aerosol particles. The condensable particulate emitted from boilers fueled on coal or oil is primarily inorganic in nature.

1.1.3.2 Sulfur Oxides[4] -

Gaseous SO_x from coal combustion are primarily sulfur dioxide (SO_2), with a much lower quantity of sulfur trioxide (SO_3) and gaseous sulfates. These compounds form as the organic and pyritic sulfur in the coal are oxidized during the combustion process. On average, about 95 percent of the sulfur present in bituminous coal will be emitted as gaseous SO_x, whereas somewhat less will be emitted when subbituminous coal is fired. The more alkaline nature of the ash in some subbituminous coals causes some of the sulfur to react in the furnace to form various sulfate salts that are retained in the boiler or in the flyash.

1.1.3.3 Nitrogen Oxides[5-6] -

NO_x emissions from coal combustion are primarily nitric oxide (NO), with only a few volume percent as nitrogen dioxide (NO_2). Nitrous oxide (N_2O) is also emitted at a few parts per million. NO_x formation results from thermal fixation of atmospheric nitrogen in the combustion flame and from oxidation of nitrogen bound in the coal. Experimental measurements of thermal NO_x formation have shown that the NO_x concentration is exponentially dependent on temperature and is proportional to nitrogen concentration in the flame, the square root of oxygen concentration in the flame, and the gas residence time.[7] Cyclone boilers typically have high conversion of nitrogen to NO_x Typically, only 20 to 60 percent of the fuel nitrogen is converted to NO_x. Bituminous and subbituminous coals

usually contain from 0.5 to 2 weight percent nitrogen, mainly present in aromatic ring structures. Fuel nitrogen can account for up to 80 percent of total NO_x from coal combustion.

1.1.3.4 Carbon Monoxide -

The rate of CO emissions from combustion sources depends on the fuel oxidation efficiency of the source. By controlling the combustion process carefully, CO emissions can be minimized. Thus, if a unit is operated improperly or is not well-maintained, the resulting concentrations of CO (as well as organic compounds) may increase by several orders of magnitude. Smaller boilers, heaters, and furnaces typically emit more CO and organics than larger combustors. This is because smaller units usually have less high-temperature residence time and, therefore, less time to achieve complete combustion than larger combustors. Combustion modification techniques and equipment used to reduce NO_x can increase CO emissions if the modification techniques are improperly implemented or if the equipment is improperly designed.

1.1.3.5 Organic Compounds -

As with CO emissions, the rate at which organic compounds are emitted depends on the combustion efficiency of the boiler. Therefore, combustion modifications that change combustion residence time, temperature, or turbulence may increase or decrease concentrations of organic compounds in the flue gas.

Organic emissions include volatile, semivolatile, and condensable organic compounds either present in the coal or formed as a product of incomplete combustion (PIC). Organic emissions are primarily characterized by the criteria pollutant class of unburned vapor-phase hydrocarbons. These emissions include alkanes, alkenes, aldehydes, alcohols, and substituted benzenes (e.g., benzene, toluene, xylene, and ethyl benzene). [8,9]

Emissions of polychlorinated dibenzo-p-dioxins and polychlorinated dibenzofurans (PCDD/PCDF) also result from the combustion of coal. Of primary interest environmentally are tetrachloro- through octachloro- dioxins and furans. Dioxin and furan emissions are influenced by the extent of destruction of organics during combustion and through reactions in the air pollution control equipment. The formation of PCDD/PCDF in air pollution control equipment is primarily dependent on flue gas temperature, with maximum potential for formation occurring at flue gas temperatures of 450 degrees to 650 degrees Fahrenheit.

The remaining organic emissions are composed largely of compounds emitted from combustion sources in a condensed phase. These compounds can almost exclusively be classed into a group known as polycyclic organic matter (POM), and a subset of compounds called polynuclear aromatic hydrocarbons (PNA or PAH). Polycyclic organic matter is more prevalent in the emissions from coal combustion because of the more complex structure of coal.

1.1.3.6 Trace Metals-

Trace metals are also emitted during coal combustion. The quantity of any given metal emitted, in general, depends on:

- the physical and chemical properties of the metal itself;
- the concentration of the metal in the coal;
- the combustion conditions; and

- the type of particulate control device used, and its collection efficiency as a function of particle size.

Some trace metals become concentrated in certain particle streams from a combustor (e.g., bottom ash, collector ash, and flue gas particulate) while others do not.[10] Various classification schemes have been developed to describe this partitioning behavior.[10-12] These classification schemes generally distinguish between:

- Class 1: Elements that are approximately equally concentrated in the fly ash and bottom ash, or show little or no small particle enrichment. Examples include manganese, beryllium, cobalt, and chromium.

- Class 2: Elements that are enriched in fly ash relative to bottom ash, or show increasing enrichment with decreasing particle size. Examples include arsenic, cadmium, lead, and antimony.

- Class 3: Elements which are emitted in the gas phase (primarily mercury and, in some cases, selenium).

Control of Class 1 metals is directly related to control of total particulate matter emissions, while control of Class 2 metals depends on collection of fine particulate. Because of variability in particulate control device efficiencies, emission rates of these metals can vary substantially. Because of the volatility of Class 3 metals, particulate controls have only a limited impact on emissions of these metals.

1.1.3.7 Acid Gases-

In addition to SO_2 and NO_x emissions, combustion of coal also results in emissions of chlorine and fluorine, primarily in the form of hydrogen chloride (HCl) and hydrogen fluoride (HF). Lesser amounts of chlorine gas and fluorine gas are also emitted. A portion of the chlorine and fluorine in the fuel may be absorbed onto fly ash or bottom ash. Both HCl and HF are water soluble and are readily controlled by acid gas scrubbing systems.

1.1.3.8 Fugitive Emissions -

Fugitive emissions are defined as pollutants which escape from an industrial process due to leakage, materials handling, inadequate operational control, transfer, or storage. The fly ash handling operations in most modern utility and industrial combustion sources consist of pneumatic systems or enclosed and hooded systems which are vented through small fabric filters or other dust control devices. The fugitive PM emissions from these systems are therefore minimal. Fugitive particulate emissions can sometimes occur during fly ash transfer operations from silos to trucks or rail cars.

1.1.3.9 Greenhouse Gases[13-18] -

Carbon dioxide (CO_2), methane (CH_4), and nitrous oxide (N_2O) emissions are all produced during coal combustion. Nearly all of the fuel carbon (99 percent) in coal is converted to CO_2 during the combustion process. This conversion is relatively independent of firing configuration. Although the formation of CO acts to reduce CO_2 emissions, the amount of CO produced is insignificant compared to the amount of CO_2 produced. The majority of the fuel carbon not converted to CO_2 is entrained in bottom ash. CO_2 emissions for coal vary with carbon content, and carbon content varies between the classes of bituminous and subbituminous coals. Further, carbon content also varies within each class of coal based on the geographical location of the mine.

Formation of N_2O during the combustion process is governed by a complex series of reactions and its formation is dependent upon many factors. Formation of N_2O is minimized when combustion temperatures are kept high (above 1575°F) and excess air is kept to a minimum (less than 1 percent). N_2O emissions for coal combustion are not significant except for fluidized bed combustion (FBC), where the emissions are typically two orders of magnitude higher than all other types of coal firing due to areas of low temperature combustion in the fuel bed.

Methane emissions vary with the type of coal being fired and firing configuration, but are highest during periods of incomplete combustion, such as the start-up or shut-down cycle for coal-fired boilers. Typically, conditions that favor formation of N_2O also favor emissions of CH_4.

1.1.4 Controls[4]

Control techniques for criteria pollutants from coal combustion may be classified into three broad categories: fuel treatment/substitution, combustion modification, and postcombustion control. Emissions of noncriteria pollutants such as particulate phase metals have been controlled through the use of post combustion controls designed for criteria pollutants. Fuel treatment primarily reduces SO_2 and includes coal cleaning using physical, chemical, or biological processes; fuel substitution involves burning a cleaner fuel. Combustion modification includes any physical or operational change in the furnace or boiler and is applied primarily for NO_x control purposes, although for small units, some reduction in PM emissions may be available through improved combustion practice. Postcombustion control employs a device after the combustion of the fuel and is applied to control emissions of PM, SO_2 , and NO_x for coal combustion.

1.1.4.1 Particulate Matter Control[4] -

The principal control techniques for PM are combustion modifications (applicable to small stoker-fired boilers) and postcombustion methods (applicable to most boiler types and sizes). Uncontrolled PM emissions from small stoker-fired and hand-feed combustion sources can be minimized by employing good combustion practices such as operating within the recommended load ranges, controlling the rate of load changes, and ensuring steady, uniform fuel feed. Proper design and operation of the combustion air delivery systems can also minimize PM emissions. The postcombustion control of PM emissions from coal-fired combustion sources can be accomplished by using one or more or the following particulate control devices:

- Electrostatic precipitator (ESP),
- Fabric filter (or baghouse),
- Wet scrubber,
- Cyclone or multiclone collector, or
- Side stream separator.

Electrostatic precipitation technology is applicable to a variety of coal combustion sources. Because of their modular design, ESPs can be applied to a wide range of system sizes and should have no adverse effect on combustion system performance. The operating parameters that influence ESP performance include fly ash mass loading, particle size distribution, fly ash electrical resistivity, and precipitator voltage and current. Other factors that determine ESP collection efficiency are collection plate area, gas flow velocity, and cleaning cycle. Data for ESPs applied to coal-fired sources show fractional collection efficiencies greater than 99 percent for fine (less than 0.1 micrometer) and coarse particles (greater than 10 micrometers). These data show a reduction in collection efficiency for particle diameters between 0.1 and 10 micrometers.

Fabric filtration has been widely applied to coal combustion sources since the early 1970s and consists of a number of filtering elements (bags) along with a bag cleaning system contained in a main shell structure incorporating dust hoppers. The particulate removal efficiency of fabric filters is dependent on a variety of particle and operational characteristics. Particle characteristics that affect the collection efficiency include particle size distribution, particle cohesion characteristics, and particle electrical resistivity. Operational parameters that affect fabric filter collection efficiency include air-to-cloth ratio, operating pressure loss, cleaning sequence, interval between cleanings, cleaning method, and cleaning intensity. In addition, the particle collection efficiency and size distribution can be affected by certain fabric properties (e. g., structure of fabric, fiber composition, and bag properties). Collection efficiencies of fabric filters can be as high as 99.9 percent.

Wet scrubbers, including venturi and flooded disc scrubbers, tray or tower units, turbulent contact absorbers, or high-pressure spray impingement scrubbers are applicable for PM as well as SO_2 control on coal-fired combustion sources. Scrubber collection efficiency depends on particle size distribution, gas side pressure drop through the scrubber, and water (or scrubbing liquor) pressure, and can range between 95 and 99 percent for a 2-micron particle.

Cyclone separators can be installed singly, in series, or grouped as in a multicyclone or multiclone collector. These devices are referred to as mechanical collectors and are often used as a precollector upstream of an ESP, fabric filter, or wet scrubber so that these devices can be specified for lower particle loadings to reduce capital and/or operating costs. The collection efficiency of a mechanical collector depends strongly on the effective aerodynamic particle diameter. Although these devices will reduce PM emissions from coal combustion, they are relatively ineffective for collection of particles less than 10 micron (PM-10). The typical overall collection efficiency for mechanical collectors ranges from 90 to 95 percent.

The side-stream separator combines a multicyclone and a small pulse-jet baghouse to more efficiently collect small-diameter particles that are difficult to capture by a mechanical collector alone. Most applications to date for side-stream separators have been on small stoker boilers.

Atmospheric fluidized bed combustion (AFBC) boilers may tax conventional particulate control systems. The particulate mass concentration exiting AFBC boilers is typically 2 to 4 times higher than pulverized coal boilers. AFBC particles are also, on average, smaller in size, and irregularly shaped with higher surface area and porosity relative to pulverized coal ashes. The effect is a higher pressure drop. The AFBC ash is more difficult to collect in ESPs than pulverized coal ash because AFBC ash has a higher electrical resistivity and the use of multiclones for recycling, inherent with the AFBC process, tends to reduce exit gas stream particulate size.

1.1.4.2 Sulfur Oxides Control[4] -

Several techniques are used to reduce SO_x emissions from coal combustion. Table 1.1-1 presents the techniques most frequently used. One way is to switch to lower sulfur coals, since SO_x emissions are proportional to the sulfur content of the coal. This alternative may not be possible where lower sulfur coal is not readily available or where a different grade of coal cannot be satisfactorily fired. In some cases, various coal cleaning processes may be employed to reduce the fuel sulfur content. Physical coal cleaning removes mineral sulfur such as pyrite but is not effective in removing organic sulfur. Chemical cleaning and solvent refining processes are being developed to remove organic sulfur.

Post combustion flue gas desulfurization (FGD) techniques can remove SO_2 formed during combustion by using an alkaline reagent to absorb SO_2 in the flue gas. Flue gases can be treated using wet, dry, or semi-dry desulfurization processes of either the throwaway type (in which all waste

streams are discarded) or the recovery/regenerable type (in which the SO_2 absorbent is regenerated and reused). To date, wet systems are the most commonly applied. Wet systems generally use alkali slurries as the SO_2 absorbent medium and can be designed to remove greater than 90 percent of the incoming SO_2. Lime/limestone scrubbers, sodium scrubbers, and dual alkali scrubbers are among the commercially proven wet FGD systems. The effectiveness of these devices depends not only on control device design but also on operating variables. Particulate reduction of more than 99 percent is possible with wet scrubbers, but fly ash is often collected by upstream ESPs or baghouses, to avoid erosion of the desulfurization equipment and possible interference with FGD process reactions.[18] Also, the volume of scrubber sludge is reduced with separate fly ash removal, and contamination of the reagents and by-products is prevented.

The lime and limestone wet scrubbing process uses a slurry of calcium oxide or limestone to absorb SO_2 in a wet scrubber. Control efficiencies in excess of 91 percent for lime and 94 percent for limestone over extended periods are possible. Sodium scrubbing processes generally employ a wet scrubbing solution of sodium hydroxide or sodium carbonate to absorb SO_2 from the flue gas. Sodium scrubbers are generally limited to smaller sources because of high reagent costs and can have SO_2 removal efficiencies of up to 96.2 percent. The double or dual alkali system uses a clear sodium alkali solution for SO_2 removal followed by a regeneration step using lime or limestone to recover the sodium alkali and produce a calcium sulfite and sulfate sludge. SO_2 removal efficiencies of 90 to 96 percent are possible.

1.1.4.3 Nitrogen Oxide Controls[4] -

Several techniques are used to reduce NO_x emissions from coal combustion. These techniques are summarized in Table 1.1-2. The primary techniques can be classified into one of two fundamentally different methods—combustion controls and postcombustion controls. Combustion controls reduce NO_x by suppressing NO_x formation during the combustion process, while postcombustion controls reduce NO_x emission after their formation. Combustion controls are the most widely used method of controlling NO_x formation in all types of boilers and include low excess air (LEA), burners out of service (BOOS), biased burner firing, overfire air (OFA), low NO_x burners (LNBs), and reburn. Postcombustion control methods are selective noncatalytic reduction (SNCR) and selective catalytic reduction (SCR). Combustion and postcombustion controls can be used separately or combined to achieve greater NO_x reduction from fluidized bed combustors in boilers.

Operating at LEA involves reducing the amount of combustion air to the lowest possible level while maintaining efficient and environmentally compliant boiler operation. NO_x formation is inhibited because less oxygen is available in the combustion zone. BOOS involves withholding fuel flow to all or part of the top row of burners so that only air is allowed to pass through. This method simulates air staging, or OFA conditions, and limits NO_x formation by lowering the oxygen level in the burner area. Biased burner firing involves more fuel-rich firing in the lower rows of burners than in the upper row of burners. This method provides a form of air staging and limits NO_x formation by limiting the amount of oxygen in the firing zone. These methods may change the normal operation of the boiler and the effectiveness is boiler-specific. Implementation of these techniques may also reduce operational flexibility; however, they may reduce NO_x by 10 to 20 percent from uncontrolled levels.

OFA is a technique in which a percentage of the total combustion air is diverted from the burners and injected through ports above the top burner level. OFA limits NO_x by (1) suppressing thermal NO_x by partially delaying and extending the combustion process resulting in less intense combustion and cooler flame temperatures and (2) suppressing fuel NO_x formation by reducing the concentration of air in the combustion zone where volatile fuel nitrogen is evolved. OFA can be applied for various boiler types including tangential and wall-fired, turbo, and stoker boilers and can reduce NO_x by 20 to 30 percent from uncontrolled levels.

LNBs limit NO_x formation by controlling the stoichiometric and temperature profiles of the combustion process in each burner zone. The unique design of features of an LNB may create (1) a reduced oxygen level in the combustion zone to limit fuel NO_x formation, (2) a reduced flame temperature that limits thermal NO_x formation, and/or (3) a reduced residence time at peak temperature which also limits thermal NO_x formation.

LNBs are applicable to tangential and wall-fired boilers of various sizes but are not applicable to other boiler types such as cyclone furnaces or stokers. They have been used as a retrofit NO_x control for existing boilers and can achieve approximately 35 to 55 percent reduction from uncontrolled levels. They are also used in new boilers to meet New Source Performance Standards (NSPS) limits. LNBs can be combined with OFA to achieve even greater NO_x reduction (40 to 60 percent reduction from uncontrolled levels).

Reburn is a combustion hardware modification in which the NO_x produced in the main combustion zone is reduced in a second combustion zone downstream. This technique involves withholding up to 40 percent (at full load) of the heat input to the main combustion zone and introducing that heat input above the top row of burners to create a reburn zone. Reburn fuel (natural gas, oil, or pulverized coal) is injected with either air or flue gas to create a fuel-rich zone that reduces the NO_x created in the main combustion zone to nitrogen and water vapor. The fuel-rich combustion gases from the reburn zone are completely combusted by injecting overfire air above the reburn zone. Reburn may be applicable to many boiler types firing coal as the primary fuel, including tangential, wall-fired, and cyclone boilers. However, the application and effectiveness are site-specific because each boiler is originally designed to achieve specific steam conditions and capacity which may be altered due to reburn. Commercial experience is limited; however, this limited experience does indicate NO_x reduction of 50 to 60 percent from uncontrolled levels may be achieved.

SNCR is a postcombustion technique that involves injecting ammonia (NH_3) or urea into specific temperature zones in the upper furnace or convective pass. The ammonia or urea reacts with NO_x in the flue gas to produce nitrogen and water. The effectiveness of SNCR depends on the temperature where reagents are injected; mixing of the reagent in the flue gas; residence time of the reagent within the required temperature window; ratio of reagent to NO_x; and the sulfur content of the fuel that may create sulfur compounds that deposit in downstream equipment. There is not as much commercial experience to base effectiveness on a wide range of boiler types; however, in limited applications, NO_x reductions of 25 to 40 percent have been achieved.

SCR is another postcombustion technique that involves injecting NH_3 into the flue gas in the presence of a catalyst to reduce NO_x to nitrogen and then water. The SCR reactor can be located at various positions in the process including before an air heater and particulate control device, or downstream of the air heater, particulate control device, and flue gas desulfurization systems. The performance of SCR is influenced by flue gas temperature, fuel sulfur content, ammonia-to-NO_x ratio, inlet NO_x concentration, space velocity, and catalyst condition. Although there is currently very limited application of SCR in the U.S. on coal-fired boilers, NO_x reductions of 75 to 86 percent have been realized on a few pilot systems.

1.1.5 Emission Factors

Emission factors for SO_x, NO_x, and CO are presented in Table 1.1-3. Tables in this section present emission factors on both a weight basis (lb/ton) and an energy basis (lb/Btu). To convert from lb/ton to lb/MMBtu, divide by a heating value of 26.0 MMBtu/ton. Because of the inherently low NO_X emission characteristics of FBCs and the potential for in-bed SO_2 capture by calcium-based sorbents, uncontrolled emission factors for this source category were not developed in the same sense as with other source categories. For NO_x emissions, the data collected from test reports were considered to be baseline (uncontrolled) if no additional add-on NO_x control system (such as ammonia injection) was operated. For SO_2 emissions, a correlation was developed from reported data on FBCs to relate SO_2 emissions to the coal sulfur content and the calcium-to-sulfur ratio in the bed.

Particulate matter and particulate matter less than, or equal to, 10 micrometers in diameter (PM-10) emission factors are presented in Table 1.1-4. Cumulative particle size distributions and particulate size-specific emission factors are given in Tables 1.1-5, 1.1-6, 1.1-7, 1.1-8, 1.1-9, and 1.1-10. Particulate size-specific emission factors are also presented graphically in Figures 1.1-1, 1.1-2, 1.1-3, 1.1-4, 1.1-5, and 1.1-6.

Controlled emission factors for PCDD/PCDF and PAHs are provided in Tables 1.1-11 and 1.1-12, respectively. Controlled emission factors for other organic compounds are presented in Table 1.1-13. Emission factors for hydrogen chloride and hydrogen fluoride are presented in Table 1.1-14.

Table 1.1-15 presents emission factor equations for nine trace metals from controlled and uncontrolled boilers. Table 1.1-16 presents uncontrolled emission factors for seven of the same metals, along with mercury, POM and formaldehyde. Table 1.1-17 presents controlled emission factors for 13 trace metals and includes the metals found in Tables 1.1-15 and 1.1-16. The emission factor equations in Table 1.1-15 are based on statistical correlations among measured trace element concentrations in coal, measured fractions of ash in coal, and measured particulate matter emission factors. Because these are the major parameters affecting trace metals emissions from coal combustion, it is recommended that the emission factor equations be used when the inputs to the equations are available. If the inputs to the emission factor equations are not available for a pollutant, then the emission factors provided in Table 1.1-16 and 1.1-17 for the pollutant should be used.

Greenhouse gas emission factors, including CH_4, non-methane organic compounds (NMOC), and N_2O are provided in Table 1.1-18. In addition, Table 1.1-19 provides emission factors for CO_2.

1.1.6 Updates Since the Fifth Edition

The Fifth Edition was released in January 1995. Revisions to this section since that date are summarized below. For further detail, consult the memoranda describing each supplement or the background report for this section. These and other documents can be found on the CHIEF electronic bulletin board (919-541-5742), or on the new EFIG home page (http://www.epa.gov/oar/oaqps/efig/).

Supplement A, February 1996

- SCC's were corrected from 1-01-002-17, 1-02-002-17, and 1-03-002-17, to 1-01-002-18, 1-02-002-18, and 1-03-002-18 in the tables with SO_x, NO_x, CO, and PM/PM10 emission factors.

- For SO_x factors, clarifications were added to the table footnotes to clarify that "S" is a weight percent and not a fraction. Similar clarification was added to the footnote for the CO_2 factor.

- For fluidized bed combustors (bubbling bed and circulating bed), the PM10 factors were replaced with footnote "m." The revised footnote "m" directs the user to the emission factor for spreader stoker with multiple cyclones and no flyash reinjection.

- In the table with filterable PM factors, the misspelling of "filterable" was corrected.

- In the cumulative particle size distribution table, text was added to the table footnotes to clarify that "A" is a weight percent and not a fraction.

- In the cumulative particle size distribution for spreader stokers, all of the factors were corrected.

- The N_2O emission factor for bubbling bed was changed from 5.9 lb/ton to 5.5 lb/ton.

Supplement B, October 1996

- Text was added concerning coal rank/classification, firing practices, emissions, and controls.

- The table for NO_x control technologies was revised to include controls for all types of coal-fired boilers.

- SO_x, NO_x, and CO emission factors were added for cell burners.

- The PM table was revised to recommend using spreader stoker PM factors for FBC units.

- Tables were added for new emission factors for polychlorinated toxics, polynuclear aromatics, organic toxics, acid gas toxics, trace metal toxics, and controlled toxics.

- N_2O emission factors were added.

- Default CO_2 emission factors were added.

Table 1.1-1. POSTCOMBUSTION SO_2 CONTROLS FOR COAL COMBUSTION SOURCES

Control Technology	Process	Typical Control Efficiencies	Remarks
Wet scrubber	Lime/limestone	80 - 95+%	Applicable to high sulfur fuels, wet sludge product
	Sodium carbonate	80 - 98%	5-430 million Btu/hr typical application range, high reagent costs
	Magnesium oxide/ hydroxide	80 - 95+%	Can be regenerated
	Dual alkali	90 - 96%	Uses lime to regenerate sodium-based scrubbing liquor
Spray drying	Calcium hydroxide slurry, vaporizes in spray vessel	70 - 90%	Applicable to low and medium sulfur fuels, produces dry product
Furnace injection	Dry calcium carbonate/hydrate injection in upper furnace cavity	25 - 50%	Commercialized in Europe, several U. S. demonstration projects are completed
Duct injection	Dry sorbent injection into duct, sometimes combined with water spray	25 - 50+%	Several research and development, and demonstration projects underway, not yet commercially available in the United States.

Table 1.1-2. NO_x CONTROL OPTIONS FOR COAL-FIRED BOILERS[a]

Control Technique	Description of Technique	Applicable Boiler Designs	NO_x Reduction Potential[b] (%)	Commercial Availability/R & D Status	Comments
Combustion Modifications					
Load reduction	Reduction of coal and air	Stokers	Minimal	Available	Applicable to stokers that can reduce load without increasing excess air; may cause reduction in boiler efficiency; NO_x reduction varies with percent load reduction.
Operational modifications (BOOS, LEA, BF, or combination)	Rearrangement of air or fuel in the main combustion zone	Pulverized coal boilers (some designs); Stokers (LEA only)	10 - 20	Available	Must have sufficient operational flexibility to achieve NO_x reduction potential without sacrificing boiler performance.
Overfire Air	Injection of air above main combustion zone	Pulverized coal boilers and stokers	20 - 30	Available	Must have sufficient furnace height above top row of burners in order to retrofit this technology to existing boilers.
Low NO_x Burners	New burner designs controlling air-fuel mixing	Pulverized coal boilers	35 - 55	Available	Available in new boiler designs and can be retrofit in existing boilers.
LNB with OFA	Combination of new burner designs and injection of air above main combustion zone	Pulverized coal boilers	40 - 60	Available	Available in new boiler designs and can be retrofit in existing boilers with sufficient furnace height above top row of burners.
Reburn	Injection of reburn fuel and completion air above main combustion zone	Pulverized coal boilers, cyclone furnaces	50 - 60	Commercially available but not widely demonstrated	Reburn fuel can be natural gas, fuel oil, or pulverized coal. Must have sufficient furnace height to retrofit this technology to existing boilers.

Table 1.1-2 (cont.).

Control Technique	Description of Technique	Applicable Boiler Designs	NO_x Reduction Potential[b] (%)	Commercial Availability/R & D Status	Comments
Post-Combustion Modifications					
SNCR	Injection of NH_3 or urea in the convective pass	Pulverized coal boilers, cyclone furnaces, stokers, and fluidized bed boilers	30 - 60	Commercially available but not widely demonstrated	Applicable to new boilers or as a retrofit technology; must have sufficient residence time at correct temperature (1,750°±90°F); elaborate reagent injection system; possible load restrictions on boiler; and possible air preheater fouling by ammonium bisulfate.
SCR	Injection of NH_3 in combination with catalyst material	Pulverized coal boilers, cyclone furnaces	75 - 85	Commercially offered, but not yet demonstrated	Applicable to new boilers or as a retrofit technology provided there is sufficient space; hot-side SCR best on low-sulfur fuel and low fly ash applications; cold-side SCR can be used on high-sulfur/high-ash applications if equipped with an upstream FGD system.
LNB with SNCR	Combination of new burner designs and injection of NH_3 or urea	Pulverized coal boilers	50-80	Commercially offered, but not widely demonstrated as a combined technology	Same as LNB and SNCR alone.
LNB with OFA and SCR	Combination of new burner design, injection of air above combustion zone, and injection of NH_3 or urea	Pulverized coal boiler	85-95	Commercially offered, but not widely demonstrated as a combined technology	Same as LNB, OFA, and SCR alone.

[a] References 20-21.
[b] NO_x reduction potential from uncontrolled levels.

Table 1.1-3. UNCONTROLLED EMISSION FACTORS FOR SO_x, NO_x, AND CO FROM BITUMINOUS AND SUBBITUMINOUS COAL COMBUSTION[a]

Firing Configuration	SCC	SO_x[b]		NO_x[c]		CO[d,e]	
		Emission Factor (lb/ton)	EMISSION FACTOR RATING	Emission Factor (lb/ton)	EMISSION FACTOR RATING	Emission Factor (lb/ton)	EMISSION FACTOR RATING
PC-fired, dry bottom, wall-fired	1-01-002-02/22 1-02-002-02/22 1-03-002-06/22	38S (35S)	A	21.7	A	0.5	A
PC-fired, bituminous coal, dry bottom, cell burner fired[f]	1-01-002-15	38S (35S)	A	31.1	C	0.5	A
PC-fired, dry bottom, tangentially fired	1-01-002-12/26 1-02-002-12/26 1-03-002-16/26	38S (35S)	A	14.4	A	0.5	A
PC-fired, wet bottom	1-01-002-01/21 1-02-002-01/21 1-03-002-05/21	38S (35S)	D	34.0	C	0.5	A
Cyclone furnace	1-01-002-03/23 1-02-002-03/23 1-03-002-03/23	38S (35S)	D	33.8	C	0.5	A
Spreader stoker	1-01-002-04/24 1-02-002-04/24 1-03-002-09/24	38S (35S)	B	13.7	A	5	A
Spreader stoker, with multiple cyclones, and reinjection	1-01-002-04/24 1-02-002-04/24 1-03-002-09/24	38S (35S)	B	13.7	A	5	A
Spreader stoker, with multiple cyclones, no reinjection	1-01-002-04/24 1-02-002-04/24 1-03-002-09/24	38S (35S)	A	13.7	A	5	A

Table 1.1-3 (cont.).

Firing Configuration	SCC	SO_x[b]		NO_x[c]		CO[d,e]	
		Emission Factor (lb/ton)	EMISSION FACTOR RATING	Emission Factor (lb/ton)	EMISSION FACTOR RATING	Emission Factor (lb/ton)	EMISSION FACTOR RATING
Overfeed stoker[g]	1-01-002-05/25 1-02-002-05/25 1-03-002-07/25	38S (35S)	B	7.5	A	6	B
Feed stoker, with multiple cyclones[g]	1-01-002-05/25 1-02-002-05/25 1-03-002-07/25	38S (35S)	B	7.5	A	6	B
Underfeed stoker	1-02-002-06 1-03-002-08	31S	B	9.5	A	11	B
Underfeed stoker, with multiple cyclones	1-02-002-06 1-03-002-08	31S	B	9.5	A	11	B
Hand-fed units	1-03-002-14	31S	D	9.1	E	275	E
FBC, circulating bed	1-01-002-18 1-02-002-18 1-03-002-18	—[h]	E	3.9	E	18	E
FBC, bubbling bed	1-01-002-17 1-02-002-17 1-03-002-17	—[h]	E	15.2	D	18	D

[a] Factors represent uncontrolled emissions unless otherwise specified and should be applied to coal feed, as fired. SCC = Source Classification Code. To convert from lb/ton to kg/Mg, multiply by 0.5.

[b] Expressed as SO_2, including SO_2, SO_3, and gaseous sulfates. Factors in parentheses should be used to estimate gaseous SO_x emissions for subbituminous coal. In all cases, S is weight % sulfur content of coal as fired. Emission factor would be calculated by multiplying the weight percent sulfur in the coal by the numerical value preceding S. For example, if fuel is 1.2% sulfur, then S = 1.2. On average for bituminous coal, 95% of fuel sulfur is emitted as SO_2, and only about 0.7% of fuel sulfur is emitted as SO_3 and gaseous sulfate. An equally small percent of fuel sulfur is emitted as particulate sulfate (References 22-23). Small quantities of sulfur are also retained in bottom ash. With subbituminous coal, about 10% more fuel sulfur is retained in the bottom ash and particulate because of the more alkaline nature of the coal ash. Conversion to gaseous sulfate appears about the same as for bituminous coal.

Table 1.1-3 (cont.).

[c] Expressed as NO_2. Generally, 95 volume % or more of NO_x present in combustion exhaust will be in the form of NO, the rest NO_2 (Reference 6). To express factors as NO, multiply factors by 0.66. All factors represent emissions at baseline operation (i. e., 60 to 110% load and no NO_x control measures).

[d] Nominal values achievable under normal operating conditions. Values 1 or 2 orders of magnitude higher can occur when combustion is not complete.

[e] Emission factors for CO_2 emissions from coal combustion should be calculated using lb CO_2/ton coal = 72.6C, where C is the weight % carbon content of the coal. For example, if carbon content is 85%, then C equals 85.

[f] References 24-27.

[g] Includes traveling grate, vibrating grate, and chain grate stokers.

[h] SO_2 emission factors for fluidized bed combustion are a function of fuel sulfur content and calcium-to-sulfur ratio. For both bubbling bed and circulating bed design, use: lb SO_2/ton coal = $39.6(S)(Ca/S)^{-1.9}$. In this equation, S is the weight percent sulfur in the fuel and Ca/S is the molar calcium-to-sulfur ratio in the bed. This equation may be used when the Ca/S is between 1.5 and 7. When no calcium-based sorbents are used and the bed material is inert with respect to sulfur capture, the emission factor for underfeed stokers should be used to estimate the SO_2 emissions. In this case, the emission factor ratings are E for both bubbling and circulating units.

Table 1.1-4. UNCONTROLLED EMISSION FACTORS FOR PM AND PM-10 FROM BITUMINOUS AND SUBBITUMINOUS COAL COMBUSTION[a]

Firing Configuration	SCC	Filterable PM[b]		PM-10	
		Emission Factor (lb/ton)	EMISSION FACTOR RATING	Emission Factor (lb/ton)	EMISSION FACTOR RATING
PC-fired, dry bottom, wall-fired	1-01-002-02/22 1-02-002-02/22 1-03-002-06/22	10A	A	2.3A	E
PC-fired, dry bottom, tangentially fired	1-01-002-12/26 1-02-002-12/26 1-03-002-16/26	10A	B	2.3A[c]	E
PC-fired, wet bottom	1-01-002-01/21 1-02-002-01/21 1-03-002-05/21	7A[d]	D	2.6A	E
Cyclone furnace	1-01-002-03/23 1-02-002-03/23 1-03-002-03/23	2A[d]	E	0.26A	E
Spreader stoker	1-01-002-04/24 1-02-002-04/24 1-03-002-09/24	66[e]	B	13.2	E
Spreader stoker, with multiple cyclones, and reinjection	1-01-002-04/24 1-02-002-04/24 1-03-002-09/24	17	B	12.4	E
Spreader stoker, with multiple cyclones, no reinjection	1-01-002-04/24 1-02-002-04/24 1-03-002-09/24	12	A	7.8	E
Overfeed stoker[f]	1-01-002-05/25 1-02-002-05/25 1-03-002-07/25	16[g]	C	6.0	E

Table 1.1-4 (cont.).

Firing Configuration	SCC	Filterable PM[b]		PM-10	
		Emission Factor (lb/ton)	EMISSION FACTOR RATING	Emission Factor (lb/ton)	EMISSION FACTOR RATING
Overfeed stoker, with multiple cyclones[f]	1-01-002-05/25 1-02-002-05/25 1-03-002-07/25	9[h]	C	5.0	E
Underfeed stoker	1-02-002-06 1-03-002-08	15[j]	D	6.2	E
Underfeed stoker, with multiple cyclone	1-02-002-06 1-03-002-08	11[h]	D	6.2[j]	E
Hand-fed units	1-03-002-14	15	E	6.2[k]	E
FBC, bubbling bed	1-01-002-17 1-02-002-17 1-03-002-17	m	E	m	E
FBC, circulating bed	1-01-002-18 1-02-002-18 1-03-002-18	m	E	m	E

[a] Factors represent uncontrolled emissions unless otherwise specified and should be applied to coal feed, as fired. To convert from lb/ton to kg/Mg, multiply by 0.5. SCC = Source Classification Code.

[b] Based on EPA Method 5 (front half catch) as described in Reference 28. Where particulate is expressed in terms of coal ash content, A, factor is determined by multiplying weight % ash content of coal (as fired) by the numerical value preceding the A. For example, if coal with 8% ash is fired in a PC-fired, dry bottom unit, the PM emission factor would be 10 x 8, or 80 lb/ton. The "condensable" matter collected in back-half catch of EPA Method 5 averages <5% of front-half, or "filterable", catch for pulverized coal and cyclone furnaces; 10% for spreader stokers; 15% for other stokers; and 50% for handfired units. References 28-32.

[c] No data found; emission factor for PC-fired dry bottom boilers used.

[d] Uncontrolled particulate emissions, when no fly ash reinjection is employed. When control device is installed, and collected fly ash is reinjected to boiler, particulate from boiler reaching control equipment can increase up to a factor of 2.

[e] Accounts for fly ash settling in an economizer, air heater, or breaching upstream of control device or stack. (Particulate directly at boiler outlet typically will be twice this level.) Factor should be applied even when fly ash is reinjected to boiler from air heater or economizer dust hoppers.

Table 1.1-4 (cont.).

[f] Includes traveling grate, vibrating grate, and chain grate stokers.
[g] Accounts for fly ash settling in breaching or stack base. Particulate loadings directly at boiler outlet typically can be 50% higher.
[h] See Reference 4 for discussion of apparently low multiple cyclone control efficiencies, regarding uncontrolled emissions.
[j] Accounts for fly ash settling in breaching downstream of boiler outlet.
[k] No data found; emission factor for underfeed stoker used.
[m] No data found; use emission factor for spreader stoker with multiple cyclones and reinjection.

Table 1.1-5. CUMULATIVE PARTICLE SIZE DISTRIBUTION AND SIZE-SPECIFIC EMISSION FACTORS FOR DRY BOTTOM BOILERS BURNING PULVERIZED BITUMINOUS AND SUBBITUMINOUS COAL[a]

Particle Size[b] (μm)	Cumulative Mass % ≤ Stated Size					Cumulative Emission Factor[c] (lb/ton)				
		Controlled					Controlled[e]			
	Uncontrolled	Multiple Cyclones	Scrubber	ESP	Baghouse	Uncontrolled[d]	Multiple Cyclones[f]	Scrubber[g]	ESP[g]	Baghouse[f]
15	32	54	81	79	97	3.2A	1.08A	0.48A	0.064A	0.02A
10	23	29	71	67	92	2.3A	0.58A	0.42A	0.054A	0.02A
6	17	14	62	50	77	1.7A	0.28A	0.38A	0.024A	0.02A
2.5	6	3	51	29	53	0.6A	0.06A	0.3A	0.024A	0.01A
1.25	2	1	35	17	31	0.2A	0.02A	0.22A	0.01A	0.006A
1.00	2	1	31	14	25	0 2A	0.02A	0.18A	0.01A	0.006A
0.625	1	1	20	12	14	0.10A	0.02A	0.12A	0.01A	0.002A
TOTAL	100	100	100	100	100	10A	2A	0.6A	0.08A	0.02A

[a] Reference 33. Applicable Source Classification Codes are 1-01-002-02, 1-02-002-02, 1-03-002-06, 1-01-002-12, 1-02-002-12, and 1-03-002-16. To convert from lb/ton to kg/Mg, multiply by 0.5. Emission Factors are lb of pollutant per ton of coal combusted, as fired. ESP = Electrostatic precipitator.

[b] Expressed as aerodynamic equivalent diameter.

[c] A = coal ash weight percent, as fired. For example, if coal ash weight is 8.2%, then A = 8.2.

[d] EMISSION FACTOR RATING = C.

[e] Estimated control efficiency for multiple cyclones is 80%; for scrubber, 94%; for ESP, 99.2%; and for baghouse, 99.8%.

[f] EMISSION FACTOR RATING = E.

[g] EMISSION FACTOR RATING = D.

Table 1.1-6. CUMULATIVE PARTICLE SIZE DISTRIBUTION AND SIZE-SPECIFIC EMISSION FACTORS FOR WET BOTTOM BOILERS BURNING PULVERIZED BITUMINOUS COAL[a]

EMISSION FACTOR RATING: E

Particle Size[b] (μm)	Cumulative Mass % ≤ Stated Size			Cumulative Emission Factor[c] (lb/ton)		
		Controlled			Controlled[d]	
	Uncontrolled	Multiple Cyclones	ESP	Uncontrolled	Multiple Cyclones	ESP
15	40	99	83	2.8A	1.38A	0.046
10	37	93	75	2.6A	1.3A	0.042
6	33	84	63	2.32A	1.18A	0.036
2.5	21	61	40	1.48A	0.86A	0.022A
1.25	6	31	17	0.42A	0.44A	0.01A
1.00	4	19	8	0.28A	0.26A	0.004A
0.625	2	—[e]	—[e]	0.14A	—[e]	—[e]
TOTAL	100	100	100	7.0A	1.4A	0.056A

[a] Reference 33. Applicable Source Classification Codes are 1-01-002-01, 1-02-002-01, and 1-03-002-05. To convert from lb/ton to kg/Mg, multiply by 0.5. Emission factors are lb of pollutant per ton of coal combusted as fired. ESP = Electrostatic precipitator.
[b] Expressed as aerodynamic equivalent diameter.
[c] A = coal ash weight %, as fired. For example, if coal ash weight is 2.4%, then A = 2.4.
[d] Estimated control efficiency for multiple cyclones is 94%, and for ESPs, 99.2%.
[e] Insufficient data.

Table 1.1-7. CUMULATIVE SIZE DISTRIBUTION AND SIZE-SPECIFIC EMISSION FACTORS FOR CYCLONE FURNACES BURNING BITUMINOUS COAL[a]

EMISSION FACTOR RATING: E

Particle Size[b] (μm)	Cumulative Mass % ≤ Stated Size			Cumulative Emission Factor[c] (lb/ton)		
		Controlled			Controlled[d]	
	Uncontrolled	Multiple Cyclones	ESP	Uncontrolled	Multiple Cyclones	ESP
15	33	95	90	0.66A	0.114A	0.013A
10	13	94	68	0.26A	0.112A	0.011A
6	8	93	56	0.16A	0.112A	0.009A
2.5	0	92	36	0	0.11A	0.006A
1.25	0	85	22	0	0.10A	0.004A
1.00	0	82	17	0	0.10A	0.003A
0.625	0	—[e]	—[e]	0	—[e]	—[e]
TOTAL	100	100	100	2A	0.12A	0.016A

[a] Reference 33. Applicable Source Classification Codes are 1-01-002-03, 1-02-002-03, and 1-03-002-03. To convert from lb/ton to kg/Mg, multiply by 0.5. Emissions are lb of pollutant per ton of coal combusted, as fired.
[b] Expressed as aerodynamic equivalent diameter.
[c] A = coal ash weight %, as fired. For example, if coal ash weight is 2.4%, then A = 2.4.
[d] Estimated control efficiency for multiple cyclones is 94%, and for ESPs, 99.2%.
[e] Insufficient data.

Table 1.1-8. CUMULATIVE PARTICLE SIZE DISTRIBUTION AND SIZE-SPECIFIC EMISSION FACTORS FOR SPREADER STOKERS BURNING BITUMINOUS COAL[a]

Particle Size[b] (μm)	Cumulative Mass % ≤ Stated Size					Cumulative Emission Factor[c] (lb/ton)				
		Controlled					Controlled[d]			
	Uncontrolled	Multiple Cyclones[c]	Multiple Cyclones[d]	ESP	Baghouse	Uncontrolled[e]	Multiple Cyclones[c,f]	Multiple Cyclones[d,e]	ESP[f,g]	Baghouse[e,g]
15	28	86	74	97	72	18.5	14.6	8.8	0.46	0.086
10	20	73	65	90	60	13.2	12	7.8	0.44	0.072
6	14	51	52	82	46	9.2	8.6	6.2	0.40	0.056
2.5	7	8	27	61	26	4.6	1.4	3.2	0.30	0.032
1.25	5	2	16	46	18	3.3	0.4	2.0	0.22	0.022
1.00	5	2	14	41	15	3.3	0.4	1.6	0.20	0.018
0.625	4	1	9	—[h]	7	2.6	0.2	1.0	-[h]	0.006
TOTAL	100	100	100	100	100	66.0	17.0	12.0	0.48	0.12

[a] Reference 33. Applicable Source Classification Codes are 1-01-002-04, 1-02-002-04, 1-03-002-09. To convert from lb/ton to kg/Mg, multiply by 0.5. Emissions are lb of pollutant per ton of coal combusted, as fired.
[b] Expressed as aerodynamic equivalent diameter.
[c] With flyash reinjection.
[d] Without flyash reinjection.
[e] EMISSION FACTOR RATING = C.
[f] EMISSION FACTOR RATING = E.
[g] Estimated control efficiency for ESP is 99.22%; and for baghouse, 99.8%.
[h] Insufficient data.

Table 1.1-9. CUMULATIVE PARTICLE SIZE DISTRIBUTION AND SIZE-SPECIFIC EMISSION FACTORS FOR OVERFEED STOKERS BURNING BITUMINOUS COAL[a]

Particle Size[b] (μm)	Cumulative Mass % ≤ Stated Size		Cumulative Emission Factor (lb/ton)			
			Uncontrolled		Multiple Cyclones Controlled[c]	
	Uncontrolled	Multiple Cyclones Controlled	Emission Factor	EMISSION FACTOR RATING	Emission Factor	EMISSION FACTOR RATING
15	49	60	7.8	C	5.4	E
10	37	55	6.0	C	5.0	E
6	24	49	3.8	C	4.4	E
2.5	14	43	2.2	C	3.8	E
1.25	13	39	2.0	C	3.6	E
1.00	12	39	2.0	C	3.6	E
0.625	—[d]	16	—[d]	C	1.4	E
TOTAL	100	100	16.0	C	9.0	E

[a] Reference 33. Applicable Source Classification Codes are 1-01-002-05, 1-02-002-05, and 1-03-002-07. To convert from lb/ton to kg/Mg, multiply by 0.5. Emissions are lb of pollutant per ton of coal combusted, as fired.
[b] Expressed as aerodynamic equivalent diameter.
[c] Estimated control efficiency for multiple cyclones is 80%.
[d] Insufficient data.

Table 1.1-10. CUMULATIVE PARTICLE SIZE DISTRIBUTION AND SIZE-SPECIFIC EMISSION FACTORS FOR UNDERFEED STOKERS BURNING BITUMINOUS COAL[a]

EMISSION FACTOR RATING: C

Particle Size[b] (μm)	Cumulative Mass % ≤ Stated Size	Uncontrolled Cumulative Emission Factor[c] (lb/ton)
15	50	7.6
10	41	6.2
6	32	4.8
2.5	25	3.8
1.25	22	3.4
1.00	21	3.2
0.625	18	2.7
TOTAL	100	15.0

[a] Reference 33. Applicable Source Classification Codes are 1-02-002-06 and 1-03-002-08. To convert from lb/ton to kg/Mg, multiply by 0.5. Emission factors are lb of pollutant per ton of coal combusted, as fired.

[b] Expressed as aerodynamic equivalent diameter.

[c] May also be used for uncontrolled hand-fired units.

Table 1.1-11 EMISSION FACTORS FOR POLYCHLORINATED DIBENZO-P-DIOXINS AND POLYCHLORINATED DIBENZOFURANS FROM CONTROLLED BITUMINOUS AND SUBBITUMINOUS COAL COMBUSTION

Controls	FGD-SDA with FF[a]		ESP or FF[b]	
Congener	Emission Factor[c] (lb/ton)	EMISSION FACTOR RATING	Emission Factor[c] (lb/ton)	EMISSION FACTOR RATING
2,3,7,8-TCDD	No data	---	1.43E-11	E
Total TCDD	3.93E-10	E	9.28E-11	D
Total PeCDD	7.06E-10	E	4.47E-11	D
Total HxCDD	3.00E-09	E	2.87E-11	D
Total HpCDD	1.00E-08	E	8.34E-11	D
Total OCDD	2.87E-08	E	4.16E-10	D
Total PCDD[d]	4.28E-08	E	6.66E-10	D
2,3,7,8-TCDF	No data	---	5.10E-11	D
Total TCDF	2.49E-09	E	4.04E-10	D
Total PeCDF	4.84E-09	E	3.53E-10	D
Total HxCDF	1.27E-08	E	1.92E-10	D
Total HpCDF	4.39E-08	E	7.68E-11	D
Total OCDF	1.37E-07	E	6.63E-11	D
Total PCDF[d]	2.01E-07	E	1.09E-09	D
TOTAL PCDD/PCDF	2.44E-07	E	1.76E-09	D

[a] Reference 34. Factors apply to boilers equipped with both flue gas desulfurization spray dryer absorber (FGD-SDA) and a fabric filter (FF). SCCs = pulverized coal-fired, dry bottom boilers, 1-01-002-02/22, 1-02-002-02/22, and 1-03-002-06/22.

[b] References 35-37. Factors apply to boilers equipped with an electrostatic precipitator (ESP) or a fabric filter. SCCs = pulverized coal-fired, dry bottom boilers, 1-01-002-02/22, 1-02-002-02/22, 1-03-002-06/22; and, cyclone boilers, 1-01-002-03/23, 1-02-002-03/23, and 1-03-002-03/23.

[c] Emission factor should be applied to coal feed, as fired. To convert from lb/ton to kg/Mg, multiply by 0.5. Emissions are lb of pollutant per ton of coal combusted.

[d] Total PCDD is the sum of Total TCDD through Total OCDD. Total PCDF is the sum of Total TCDF through Total OCDF.

Table 1.1-12 EMISSION FACTORS FOR POLYNUCLEAR AROMATIC HYDROCARBONS (PAH) FROM CONTROLLED COAL COMBUSTION[a]

Pollutant	Emission Factor[b] (lb/ton)	EMISSION FACTOR RATING
Biphenyl	1.7E-06	D
Acenaphthene	5.1E-07	B
Acenaphthylene	2.5E-07	B
Anthracene	2.1E-07	B
Benzo(a)anthracene	8.0E-08	B
Benzo(a)pyrene	3.8E-08	D
Benzo(b,j,k)fluoranthene	1.1E-07	B
Benzo(g,h,i)perylene	2.7E-08	D
Chrysene	1.0E-07	C
Fluoranthene	7.1E-07	B
Fluorene	9.1E-07	B
Indeno(1,2,3-cd)pyrene	6.1E-08	C
Naphthalene	1.3E-05	C
Phenanthrene	2.7E-06	B
Pyrene	3.3E-07	B
5-Methyl chrysene	2.2E-08	D

[a] References 35-45. Factors were developed from emissions data from six sites firing bituminous coal, four sites firing subbituminous coal, and from one site firing lignite. Factors apply to boilers utilizing both wet limestone scrubbers or spray dryers with an electrostatic precipitator (ESP) or fabric filter (FF). The factors also apply to boilers utilizing only an ESP or FF. Bituminous/subbituminous SCCs = pulverized coal-fired dry bottom boilers, 1-01-002-02/22, 1-02-002-02/22, 1-03-002-06; pulverized coal, dry bottom, tangentially-fired boilers, 1-01-002-12/26, 1-02-002-12/26, 1-03-002-16/26; and, cyclone boilers, 1-01-002-03/23, 1-02-002-03/23, and 1-03-002-03/23.

[b] Emission factor should be applied to coal feed, as fired. To convert from lb/ton to kg/Mg, multiply by 0.5. Emissions are lb of pollutant per ton of coal combusted.

Table 1.1-13 EMISSION FACTORS FOR VARIOUS ORGANIC COMPOUNDS FROM CONTROLLED COAL COMBUSTION[a]

Pollutant[b]	Emission Factor[c] (lb/ton)	EMISSION FACTOR RATING
Acetaldehyde	5.7E-04	C
Acetophenone	1.5E-05	D
Acrolein	2.9E-04	D
Benzene	1.3E-03	A
Benzyl chloride	7.0E-04	D
Bis(2-ethylhexyl)phthalate (DEHP)	7.3E-05	D
Bromoform	3.9E-05	E
Carbon disulfide	1.3E-04	D
2-Chloroacetophenone	7.0E-06	E
Chlorobenzene	2.2E-05	D
Chloroform	5.9E-05	D
Cumene	5.3E-06	E
Cyanide	2.5E-03	D
2,4-Dinitrotoluene	2.8E-07	D
Dimethyl sulfate	4.8E-05	E
Ethyl benzene	9.4E-05	D
Ethyl chloride	4.2E-05	D
Ethylene dichloride	4.0E-05	E
Ethylene dibromide	1.2E-06	E
Formaldehyde	2.4E-04	A
Hexane	6.7E-05	D
Isophorone	5.8E-04	D
Methyl bromide	1.6E-04	D
Methyl chloride	5.3E-04	D
Methyl ethyl ketone	3.9E-04	D
Methyl hydrazine	1.7E-04	E
Methyl methacrylate	2.0E-05	E
Methyl tert butyl ether	3.5E-05	E
Methylene chloride	2.9E-04	D

Table 1.1-13 (cont.).

Pollutant[b]	Emission Factor[c] (lb/ton)	EMISSION FACTOR RATING
Phenol	1.6E-05	D
Propionaldehyde	3.8E-04	D
Tetrachloroethylene	4.3E-05	D
Toluene	2.4E-04	A
1,1,1-Trichloroethane	2.0E-05	E
Styrene	2.5E-05	D
Xylenes	3.7E-05	C
Vinyl acetate	7.6E-06	E

[a] References 35-53. Factors were developed from emissions data from ten sites firing bituminous coal, eight sites firing subbituminous coal, and from one site firing lignite. The emission factors are applicable to boilers using both wet limestone scrubbers or spray dryers and an electrostatic precipitator (ESP) or fabric filter (FF). In addition, the factors apply to boilers utilizing only an ESP or FF. SCCs = pulverized coal-fired, dry bottom boilers, 1-01-002-02/22, 1-02-002-02/22, 1-03-002-06/22; pulverized coal, dry bottom, tangentially-fired boilers, 1-01-002-12/26, 1-02-002-12/26, 1-03-002-16/26; cyclone boilers, 1-01-002-03/23, 1-02-002-03/23, 1-03-002-03/23; and, atmospheric fluidized bed combustors, circulating bed, 1-01-002-18/38, 1-02-002-18, and 1-03-002-18.

[b] Pollutants sampled for but not detected in any sampling run include: Carbon tetrachloride- 2 sites; 1,3-Dichloropropylene- 2 sites; N-nitrosodimethylamine- 2 sites; Ethylidene dichloride- 2 sites; Hexachlorobutadiene- 1 site; Hexachloroethane- 1 site; Propylene dichloride- 2 sites; 1,1,2,2-Tetrachloroethane- 2 sites; 1,1,2-Trichloroethane- 2 sites; Vinyl chloride- 2 sites; and, Hexachlorobenzene- 2 sites.

[c] Emission factor should be applied to coal feed, as fired. To convert from lb/ton to kg/Mg, multiply by 0.5.

Table 1.1-14. EMISSION FACTORS FOR HYDROGEN CHLORIDE (HCl) AND HYDROGEN FLUORIDE (HF) FROM COAL COMBUSTION[a]

EMISSION FACTOR RATING: B

Firing Configuration	SCC	HCl Emission Factor (lb/ton)	HF Emission Factor (lb/ton)
PC-fired, dry bottom	1-01-002-02/22 1-02-002-02/22 1-03-002-06/22	1.2	0.15
PC-fired, dry bottom, tangential	1-01-002-12/26 1-02-002-12/26 1-03-002-16/26	1.2	0.15
PC-fired, wet bottom	1-01-002-01/21 1-02-002-01/21 1-03-002-05/21	1.2	0.15
Cyclone Furnace	1-01-002-03/23 1-02-002-03/23 1-03-002-03/23	1.2	0.15
Spreader Stoker	1-01-002-04/24 1-02-002-04/24 1-03-002-09/24	1.2	0.15
Overfeed Stoker	1-01-002-05/25 1-02-002-05/25 1-03-002-07/25	1.2	0.15
Underfeed Stoker	1-02-002-06 1-03-002-08	1.2	0.15
FBC, Bubbling Bed	1-01-002-17 1-02-002-17 1-03-002-17	1.2	0.15
FBC, Circulating Bed	1-01-002-18/38 1-02-002-18 1-03-002-18	1.2	0.15
Hand-fired	1-03-002-14	1.2	0.15

[a] Reference 54. The emission factors were developed from bituminous coal, subbituminous coal, and lignite emissions data. To convert from lb/ton to kg/Mg, multiply by 0.5. The factors apply to both controlled and uncontrolled sources.

Table 1.1-15. EMISSION FACTOR EQUATIONS FOR TRACE ELEMENTS FROM COAL COMBUSTION[a]

EMISSION FACTOR EQUATION RATING: A[b]

Pollutant	Emission Equation ($lb/10^{12}$ Btu)[c]
Antimony	$0.92 * (C/A * PM)^{0.63}$
Arsenic	$3.1 * (C/A * PM)^{0.85}$
Beryllium	$1.2 * (C/A * PM)^{1.1}$
Cadmium	$3.3 * (C/A * PM)^{0.5}$
Chromium	$3.7 * (C/A * PM)^{0.58}$
Cobalt	$1.7 * (C/A * PM)^{0.69}$
Lead	$3.4 * (C/A * PM)^{0.80}$
Manganese	$3.8 * (C/A * PM)^{0.60}$
Nickel	$4.4 * (C/A * PM)^{0.48}$

[a] Reference 55. The equations were developed from emissions data from bituminous coal combustion, subbituminous coal combustion, and from lignite combustion. The equations may be used to generate factors for both controlled and uncontrolled boilers. The emission factor equations are applicable to all typical firing configurations for electric generation (utility), industrial, and commercial/industrial boilers firing bituminous coal, subbituminous coal, and lignite. Thus, all SCCs for these boilers are assigned to the factors.

[b] AP-42 criteria for rating emission factors were used to rate the equations.

[c] The factors produced by the equations should be applied to heat input. To convert from $lb/10^{12}$ Btu to kg/joules, multiply by 4.31×10^{-16}.
C = concentration of metal in the coal, parts per million by weight (ppmwt).
A = weight fraction of ash in the coal. For example, 10% ash is 0.1 ash fraction.
PM = Site-specific emission factor for total particulate matter, $lb/10^6$ Btu.

Table 1.1-16. EMISSION FACTORS FOR TRACE ELEMENTS, POM, AND HCOH FROM UNCONTROLLED BITUMINOUS AND SUBBITUMINOUS COAL COMBUSTION[a]

EMISSION FACTOR RATING: E

Firing Configuration (SCC)	Emission Factor, lb/10^{12} Btu									
	As	Be	Cd	Cr	Pb[b]	Mn	Hg	Ni	POM	HCOH
Pulverized coal, configuration unknown (no SCC)	ND	ND	ND	1922	ND	ND	ND	ND	ND	112[c]
Pulverized coal, wet bottom (1-01-002-01/21, 1-02-002-01/21, 1-03-002-05/21)	538	81	44-70	1020-1570	507	808-2980	16	840-1290	ND	ND
Pulverized coal, dry bottom (1-01-002-02/22, 1-02-002-06/22, 1-03-002-06/22)	684	81	44.4	1250-1570	507	228-2980	16	1030-1290	2.08	ND
Pulverized coal, dry bottom, tangential (1-01-002-12/26, 1-02-002-12/26, 1-03-002-16/26)	ND	ND	ND	ND	ND	ND	ND	ND	2.4	ND
Cyclone furnace (1-01-002-03/23, 1-02-002-03/23, 1-03-002-03/23)	115	<81	28	212-1502	507	228-1300	16	174-1290	ND	ND
Stoker, configuration unknown (no SCC)	ND	73	ND	19-300	ND	2170	16	775-1290	ND	ND
Spreader stoker (1-01-002-04/24, 1-02-002-04/24, 1-03-002-09/24)	264-542	ND	21-43	942-1570	507	ND	ND	ND	ND	221[d]
Overfeed stoker, traveling grate (1-01-002-05/25, 1-02-002-05/25, 1-03-002-07/25)	542-1030	ND	43-82	ND	507	ND	ND	ND	ND	140[e]

[a] References 56-61. The emission factors in this table represent the ranges of factors reported in the literature. If only 1 data point was found, it is still reported in this table. To convert from lb/10^{12} Btu to pg/J, multiply by 0.43. SCC = Source Classification Code. ND = no data.

[b] Lead emission factors were taken directly from an EPA background document for support of the National Ambient Air Quality Standards.

[c] Based on 2 units; 133 x 10^6 Btu/hr and 1550 x 10^6 Btu/hr.

[d] Based on 1 unit; 59 x 10^6 Btu/hr.

[e] Based on 1 unit; 52 x 10^6 Btu/hr.

Table 1.1-17 EMISSION FACTORS FOR TRACE METALS FROM CONTROLLED COAL COMBUSTION[a]

Pollutant	Emission Factor (lb/ton)[b]	EMISSION FACTOR RATING
Antimony	1.8E-05	A
Arsenic	4.1E-04	A
Beryllium	2.1E-05	A
Cadmium	5.1E-05	A
Chromium	2.6E-04	A
Chromium (VI)	7.9E-05	D
Cobalt	1.0E-04	A
Lead	4.2E-04	A
Magnesium	1.1E-02	A
Manganese	4.9E-04	A
Mercury	8.3E-05	A
Nickel	2.8E-04	A
Selenium	1.3E-03	A

[a] References 35-53, 62-70. The emission factors were developed from emissions data at eleven facilities firing bituminous coal, fifteen facilities firing subbituminous coal, and from two facilities firing lignite. The factors apply to boilers utilizing either venturi scrubbers, spray dryer absorbers, or wet limestone scrubbers with an electrostatic precipitator (ESP) or Fabric Filter (FF). In addition, the factors apply to boilers using only an ESP, FF, or venturi scrubber. SCCs = pulverized coal-fired, dry bottom boilers, 1-01-002-02/22, 1-02-002-02/22, 1-03-002-06/22; pulverized coal, dry bottom, tangentially-fired boilers, 1-01-002-12/26, 1-02-002-12/26, 1-03-002-16/26; cyclone boilers, 1-01-002-03/23, 1-02-002-03/23, 1-03-002-03/23; and, atmospheric fluidized bed combustors, circulating bed, 1-01-002-18/38, 1-02-002-18, and 1-03-002-18.

[b] Emission factor should be applied to coal feed, as fired. To convert from lb/ton to kg/Mg, multiply by 0.5.

Table 1.1-18. EMISSION FACTORS FOR CH_4, TNMOC, AND N_2O FROM BITUMINOUS AND SUBBITUMINOUS COAL COMBUSTION[a]

Firing Configuration	SCC	CH_4[b]		TNMOC[b,c]		N_2O[d]	
		Emission Factor (lb/ton)	EMISSION FACTOR RATING	Emission Factor (lb/ton)	EMISSION FACTOR RATING	Emission Factor (lb/ton)	EMISSION FACTOR RATING
PC-fired, dry bottom, wall fired	1-01-002-02/22 1-02-002-02/22 1-03-002-06/22	0.04	B	0.06	B	0.03	B
PC-fired, dry bottom, tangentially fired	1-01-002-12/26 1-02-002-12/26 1-03-002-16/26	0.04	B	0.06	B	0.08	B
PC-fired, wet bottom	1-01-002-01/21 1-02-002-01/21 1-03-002-05/21	0.05	B	0.04	B	0.08	E
Cyclone furnace	1-01-002-03/23 1-02-002-03/23 1-03-002-03/23	0.01	B	0.11	B	0.09[e]	E
Spreader stoker	1-01-002-04/24 1-02-002-04/24 1-03-002-09/24	0.06	B	0.05	B	0.04[f]	D
Spreader stoker, with multiple cyclones, and reinjection	1-01-002-04/24 1-02-002-04/24 1-03-002-09/24	0.06	B	0.05	B	0.04[f]	E
Spreader stoker, with multiple cyclones, no reinjection	1-01-002-04/24 1-02-002-04/24 1-03-002-09/24	0.06	B	0.05	B	0.04[f]	E

Table 1.1-18 (cont.).

Firing Configuration	SCC	CH_4[b]		TNMOC[b,c]		N_2O[d]	
		Emission Factor (lb/ton)	EMISSION FACTOR RATING	Emission Factor (lb/ton)	EMISSION FACTOR RATING	Emission Factor (lb/ton)	EMISSION FACTOR RATING
Overfeed stoker[g]	1-01-002-05/25 1-02-002-05/25 1-03-002-07/25	0.06	B	0.05	B	0.04[f]	E
Overfeed stoker, with multiple cyclones[g]	1-01-002-05/25 1-02-002-05/25 1-03-002-07/25	0.06	B	0.05	B	0.04[f]	E
Underfeed stoker	1-02-002-06 1-03-002-08	0.8	B	1.3	B	0.04[f]	E
Underfeed stoker, with multiple cyclone	1-02-002-06 1-03-002-08	0.8	B	1.3	B	0.04[f]	E
Hand-fed units	1-03-002-14	5	E	10	E	0.04[f]	E
FBC, bubbling bed	1-01-002-17 1-02-002-17 1-03-002-17	0.06[h]	E	0.05[h]	E	3.5[h]	B
FBC, circulating bed	1-01-002-18 1-02-002-18 1-03-002-18	0.06	E	0.05	E	3.5	B

[a] Factors represent uncontrolled emissions unless otherwise specified and should be applied to coal feed, as fired. SCC = Source Classification Code. To convert from lb/ton to kg/Mg, multiply by 0.5.
[b] Reference 32. Nominal values achievable under normal operating conditions; values 1 or 2 orders of magnitude higher can occur when combustion is not complete.
[c] TNMOC are expressed as C2 to C16 alkane equivalents (Reference 71). Because of limited data, the effects of firing configuration on TNMOC emission factors could not be distinguished. As a result, all data were averaged collectively to develop a single average emission factor for pulverized coal units, cyclones, spreaders, and overfeed stokers.
[d] References 14-15.
[e] No data found; emission factor for pulverized coal-fired dry bottom boilers used.
[f] No data found; emission factor for spreader-stoker boilers used.
[g] Includes traveling grate, vibrating grate, and chain grate stokers.
[h] No data found; emission factor for circulating fluidized bed used.

Table 1.1-19. DEFAULT CO_2 EMISSION FACTORS FOR U. S. COALS[a]

EMISSION FACTOR RATING: C

Coal Type	Average %C[b]	Conversion Factor[c]	Emission Factor[d] (lb/ton coal)
Subbituminous	66.3	72.6	4810
High-volatile bituminous	75.9	72.6	5510
Medium-volatile bituminous	83.2	72.6	6040
Low-volatile bituminous	86.1	72.6	6250

[a] This table should be used only when an ultimate analysis is not available. If the ultimate analysis is available, CO_2 emissions should be calculated by multiplying the %carbon (%C) by 72.6 This resultant factor would receive a quality rating of "B".

[b] An average of the values given in References 2,76-77. Each of these references listed average carbon contents for each coal type (dry basis) based on extensive sampling of U.S. coals.

[c] Based on the following equation:

$$\frac{44 \text{ ton } CO_2}{12 \text{ ton C}} \times 0.99 \times 2000 \frac{\text{lb } CO_2}{\text{ton } CO_2} \times \frac{1}{100\%} \quad 72.6 \frac{\text{lb } CO_2}{\text{ton \%C}}$$

Where:

44 = molecular weight of CO_2,
12 = molecular weight of carbon, and
0.99 = fraction of fuel oxidized during combustion (Reference 16).

[d] To convert from lb/ton to kg/Mg, multiply by 0.5.

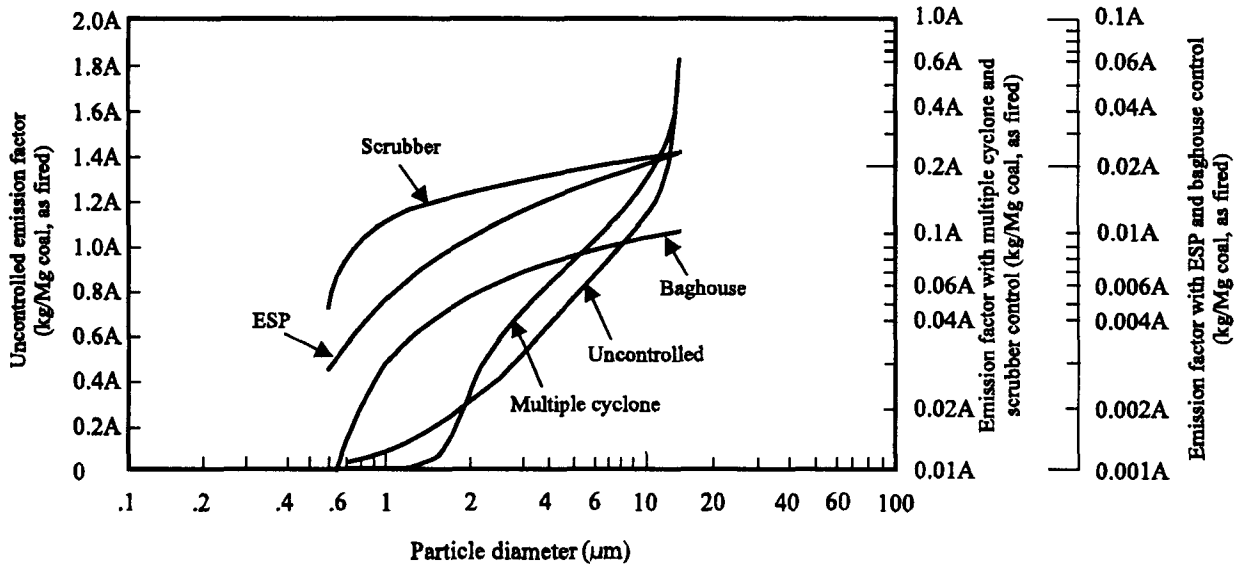

Figure 1.1-1. Cumulative size-specific emission factors for dry bottom boilers burning pulverized bituminous coal.

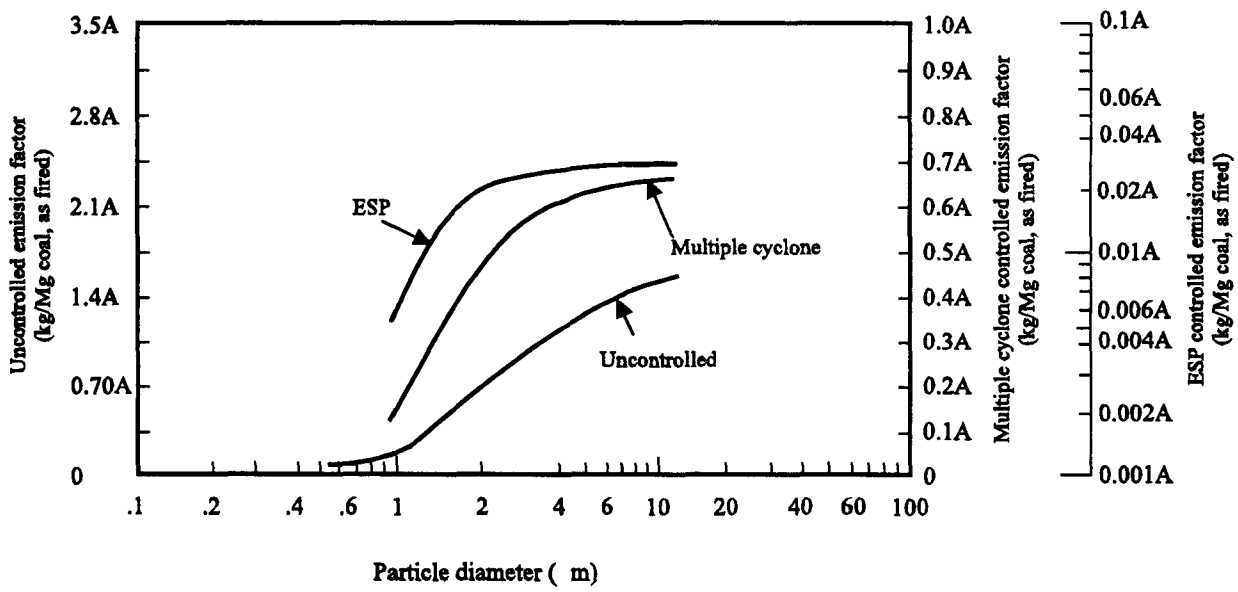

Figure 1.1-2. Cumulative size-specific emission factors for wet bottom boilers burning pulverized bituminous coal.

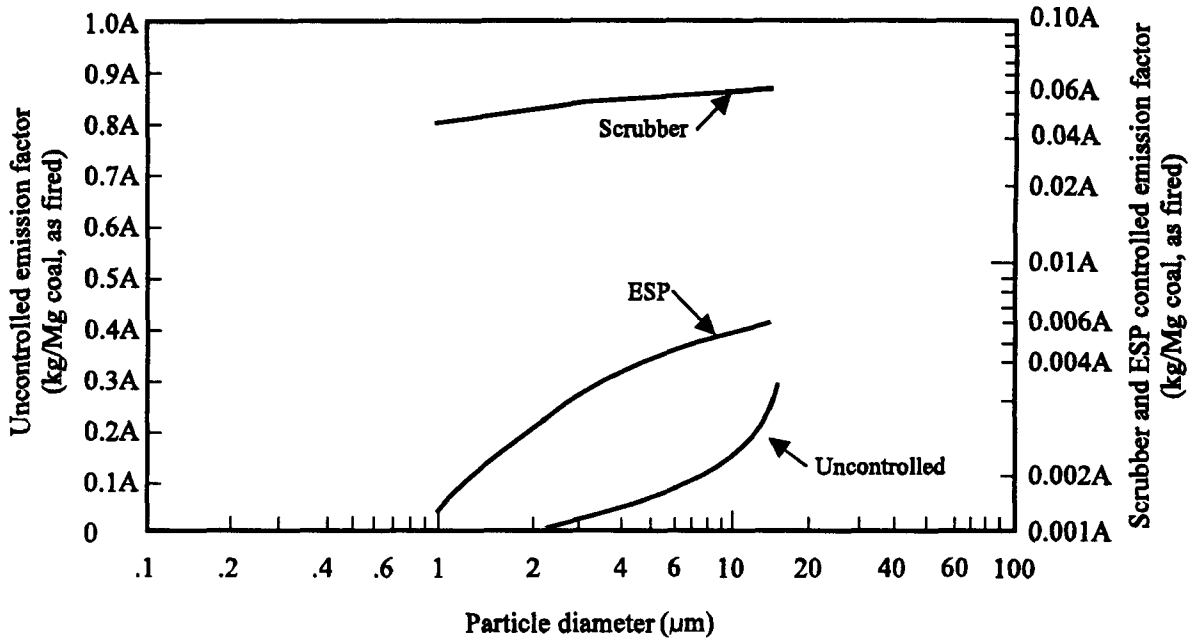

Figure 1.1-3. Cumulative size-specific emission factors for cyclone furnaces burning bituminous coal.

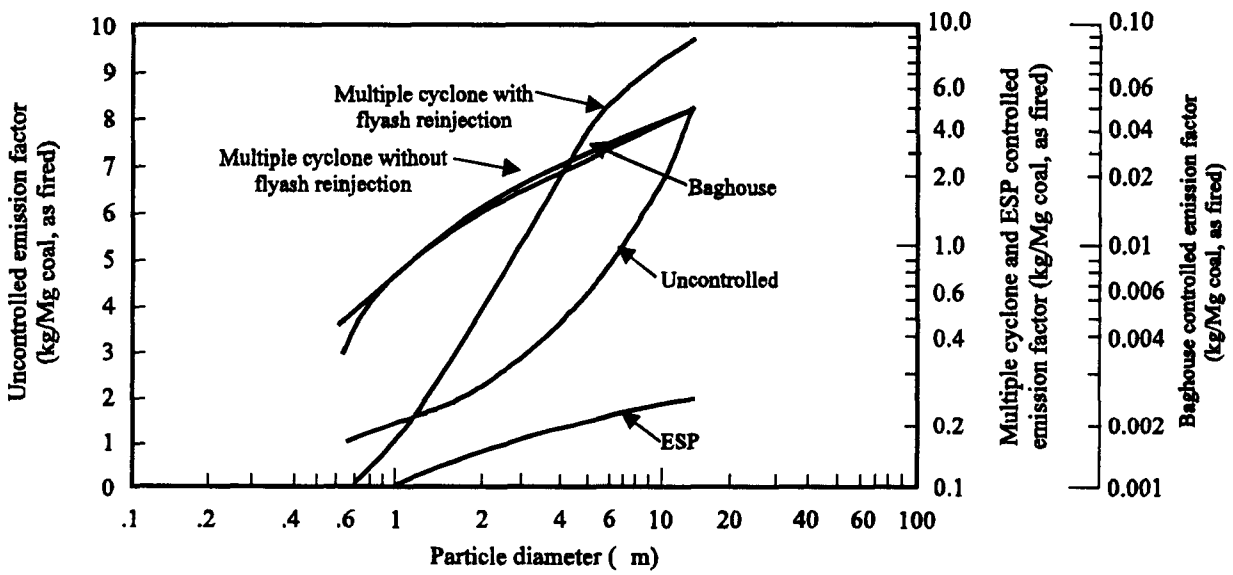

Figure 1.1-4. Cumulative size-specific emission factors for spreader stokers burning bituminous coal.

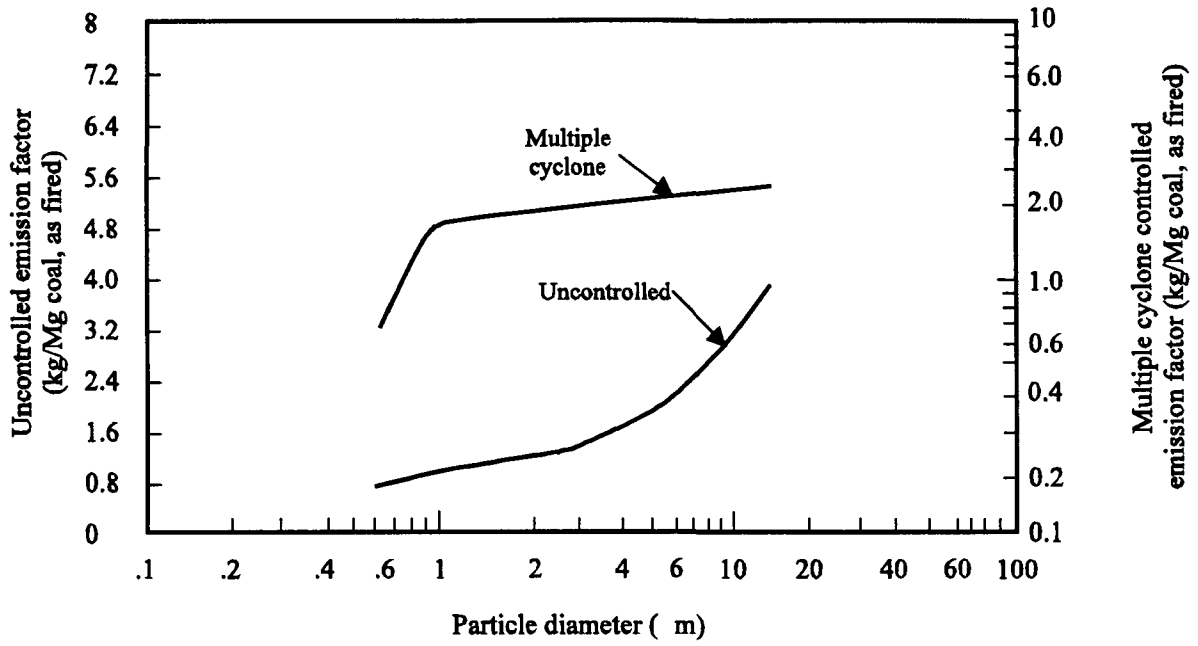

Figure 1.1-5. Cumulative size-specific emission factors for overfeed stokers burning bituminous coal.

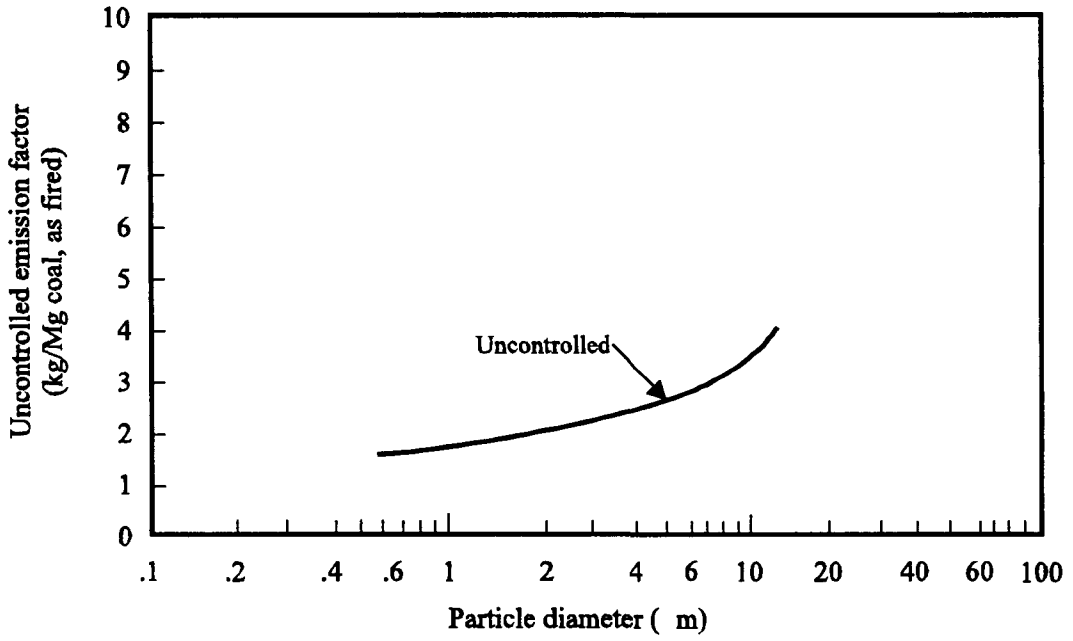

Figure 1.1-6. Cumulative size-specific emission factors for underfeed stokers burning bituminous coal.

References For Section 1.1

1. Bartok, B., Sarofina, A. F. (eds), *Fossil Fuel Combustion, A Source Book*, John Wiley & Sons, Inc., 1991, p. 239.

2. *Steam: It Generation And Use*, 38th Edition, Babcock and Wilcox, New York, 1975.

3. *Combustion.* Fossil Power Systems. Third Edition. Published by Combustion Engineering, Inc. Windsor, CT., 1981.

4. *Emission Factor Documentation For AP-42 Section 1.1 — Bituminous and Subbituminous Coal Combustion — Draft*, U. S. Environmental Protection Agency, Research Triangle Park, NC, March 1993.

5. *Control Techniques For Nitrogen Oxides Emissions From Stationary Sources*, 2nd Edition, EPA-450/1-78-001, U. S. Environmental Protection Agency, Research Triangle Park, NC, January 1978.

6. *Review Of NO_x Emission Factors For Stationary Fossil Fuel Combustion Sources*, EPA-450/4-79-021, U. S. Environmental Protection Agency, Research Triangle Park, NC, September 1979.

7. K. J. Lim, *et al.*, *Technology Assessment Report For Industrial Boiler Applications: NO_x Combustion Modification*, EPA-600/7-79-178f, U. S. Environmental Protection Agency, Research Triangle Park, NC, December 1979.

8. Particulate Polycyclic Organic Matter, National Academy of Sciences, Washington, DC, 1972.

9. Vapor Phase Organic Pollutants- Volatile Hydrocarbons and Oxidation Products, National Academy of Sciences, Washington, DC, 1976.

10. D. H. Klein, *et al.*, "Pathways of Thirty-Seven Trace Elements Through Coal-Fired Power Plants", Environmental Science and Technology, 9:973-979,1975.

11. D. G. Coles, *et al.*, "Chemical Studies of Stack Fly Ash from a Coal-Fired Power Plant", Environmental Science and Technology, 13:455-459, 1979.

12. S. Baig, *et al.*, Conventional Combustion Environmental Assessment, EPA Contract No. 68-02-3138, U. S. Environmental Protection Agency, Research Triangle Park, NC, 1981.

13. L. P. Nelson, *et al.*, *Global Combustion Sources of Nitrous Oxide Emissions*, Research Project 2333-4 Interim Report, Sacramento: Radian Corporation, 1991.

14. R. L. Peer, *et al.*, *Characterization of Nitrous Oxide Emission Sources*, U. S. Environmental Protection Agency, Office of Research and Development, Research Triangle Park, NC, 1995.

15. S. D. Piccot, *et al.*, *Emissions and Cost Estimates for Globally Significant Anthropogenic Combustion Sources of NO_x, N_2O, CH_4, CO, and CO_2*, U. S. Environmental Protection Agency, Office of Research and Development, Research Triangle Park, NC, 1990.

16. G. Marland and R. M. Rotty, *Carbon Dioxide Emissions from Fossil Fuels: A Procedure For Estimation and Results For 1951-1981*, DOE/NBB-0036 TR-003, Carbon Dioxide Research Division, Office of Energy Research, U.S. Department of Energy, Oak Ridge, TN, 1983.

17. G. Marland and R. M. Rotty, *Carbon Dioxide Emissions from Fossil Fuels: A Procedure For Estimation and Results For 1950-1982*, *Tellus*, 36B: 232-261.

18. *Sector-Specific Issues and Reporting Methodologies Supporting the General Guidelines for the Voluntary Reporting of Greenhouse Gases under Section 1605(b) of the Energy Policy Act of 1992* (1994) DOE/PO-0028, Volume 2 of 3, U.S. Department of Energy.

19. *Control Techniques For Sulfur Dioxide Emissions From Stationary Sources, 2nd Edition*, EPA-450/3-81-004, U. S. Environmental Protection Agency, Research Triangle Park, NC, April 1981.

20. *Alternative Control Techniques Document--NO_x Emissions From Utility Boilers*, EPA-453/R-94-023, March 1994, pp. 2-15, 2-18, 5-103.

21. *Emission Factor Documentation For AP-42, Section 1.1, Bituminous and Subbituminous Coal Combustion*, Prepared by Acurex Environmental Corp., Edward Aul & Associates, Inc., E. H. Pechan And Associates, Inc., EPA Contract No. 68-D0-11210, April 1993.

22. Carlo Castaldini, and Meredith Angwin, *Boiler Design And Operating Variables Affecting Uncontrolled Sulfur Emissions From Pulverized Coal Fired Steam Generators*, EPA-450/3-77-047, U. S. Environmental Protection Agency, Research Triangle Park, NC, December 1977.

23. K. Cushing, *et al.*, "Fabric Filtration Experience Downstream From Atmospheric Fluidized Bed Combustion Boilers", Presented at the Ninth Particulate Control Symposium, October 1991.

24. Susan Stamey-Hall, *Evaluation of Nitrogen Oxide Emissions Data from TVA Coal-Fired Boilers*, EPA-600/R-92-242, U. S. Environmental Protection Agency, Research Triangle Park, NC, December 1992.

25. Joel Vatsky and Timothy W. Sweeney, *Development of an Ultra-Low No_x Pulverizer Coal Burner*, Presented at the EPA/EPRI 1991 Joint Symposium on Combustion No_x Control, March 25-28, 1991, Washington, DC.

26. T. L. Lu, R. L. Lungren, and A. Kokkinos, *Performance of a Large Cell-Burner Utility Boiler Retrofitted with Foster Wheeler Low-NO_x Burners*, Presented at the EPA/EPRI 1991 Joint Symposium on Combustion NO_x Control, March 25-28, 1991, Washington, DC.

27. *Alternative Control Techniques Document — NO_x Emissions from Utility Boilers*, EPA-453/R-94-023, U. S. Environmental Protection Agency, Research Triangle Park, NC, March 1994.

28. *Standards Of Performance For New Stationary Sources*, 36 FR 24876, December 23, 1971.

29. *Field Tests Of Industrial Stoker Coal Fired Boilers For Emission Control And Efficiency Improvement - Sites L1 — 17*, EPA-600/7-81-020a, U. S. Environmental Protection Agency, Washington, DC, February 1981.

30. *Application Of Combustion Modifications To Control Pollutant Emissions From Industrial Boilers — Phase I*, EPA-650/2-74-078a, U. S. Environmental Protection Agency, Washington, DC, October 1974.

31. *Source Sampling Residential Fireplaces For Emission Factor Development*, EPA-50/3-6-010, U. S. Environmental Protection Agency, Research Triangle Park, NC, November 1875.

32. *Atmospheric Emissions From Coal Combustion: An Inventory Guide*, 999-AP-24, U. S. Environmental Protection Agency, Washington, DC, April 1966.

33. *Inhalable Particulate Source Category Report For External Combustion Sources*, EPA Contract No. 68-02-3156, Acurex Corporation, Mountain View, CA, January 1985.

34. Results of the March 28, 1990 Dioxin Emission Performance Test on Unit 3 at the NSP Sherco Plant in Becker, Minnesota. Interpoll Laboratories, Inc., Circle Pines, Minnesota. July 11, 1990.

35. Field Chemical Emissions Monitoring Project: Site 22 Emissions Report. Radian Corporation, Austin, Texas. February, 1994.

36. Toxics Assessment Report. Illinois Power Company. Baldwin Power Station- Unit 2. Baldwin, Illinois. Volumes I- Main Report. Roy F. Weston, Inc. West Chester, Pennsylvania. December, 1993.

37. Toxics Assessment Report. Minnesota Power Company Boswell Energy Center- Unit 2. Cohasset, Minnesota. Volume 1-Main Report. Roy F. Weston, Inc. West Chester, Pennsylvania. December, 1993. (EPRI Report)

38. Field Chemical Emissions Monitoring Project: Site 11 Emissions Monitoring. Radian Corporation, Austin, Texas. October, 1992. (EPRI Report)

39. Field Chemical Emissions Monitoring Project: Site 21 Emissions Monitoring. Radian Corporation, Austin, Texas. August, 1993. (EPRI Report)

40. Field Chemical Emissions Monitoring Project: Site 111 Emissions Report. Radian Corporation, Austin, Texas. May, 1993. (EPRI Report)

41. Field Chemical Emissions Monitoring Project: Site 115 Emissions Report. Radian Corporation, Austin, Texas. November, 1994. (EPRI Report)

42. Draft Final Report. A Study of Toxic Emissions from a Coal-Fired Power Plant-Niles Station No. 2. Volumes One, Two, and Three. Battelle, Columbus, Ohio. December 29, 1993.

43. Draft Final Report. A Study of Toxic Emissions from a Coal-Fired Power Plant Utilizing an ESP/Wet FGD System. Volumes One, Two, and Three. Battelle, Columbus, Ohio. December 1993.

44. Assessment of Toxic Emissions From a Coal Fired Power Plant Utilizing an ESP. Final Report- Revision 1. Energy and Environmental Research Corporation, Irvine, California. December 23, 1993.

45. 500-MW Demonstration of Advanced Wall-Fired Combustion Techniques for the Reduction of Nitrogen Oxide (NOx) Emissions from Coal-Fired Boilers. Radian Corporation, Austin, Texas.

46. Results of the November 7, 1991 Air Toxic Emission Study on the Nos. 3, 4, 5 & 6 Boilers at the NSP High Bridge Plant. Interpoll Laboratories, Inc., Circle Pines, Minnesota. January 3, 1992.

47. Results of the December 1991 Air Toxic Emission Study on Units 6 & 7 at the NSP Riverside Plant. Interpoll Laboratories, Inc., Circle Pines, Minnesota. February 28, 1992.

48. Field Chemical Emissions Monitoring Project: Site 10 Emissions Monitoring. Radian Corporation, Austin, Texas. October, 1992. (EPRI Report)

49. Field Chemical Emissions Monitoring Project: Site 12 Emissions Monitoring. Radian Corporation, Austin, Texas. November, 1992. (EPRI Report)

50. Field Chemical Emissions Monitoring Project: Site 15 Emissions Monitoring. Radian Corporation, Austin, Texas. October, 1992. (EPRI Report)

51. Field Chemical Emissions Monitoring Project: Site 101 Emissions Report. Radian Corporation, Austin, Texas. October, 1994. (EPRI Report)

52. Field Chemical Emissions Monitoring Project: Site 114 Report. Radian Corporation, Austin, Texas. May, 1994. (EPRI Report)

53. Field Chemical Emissions Monitoring Report: Site 122. Final Report, Task 1 Third Draft. EPRI RP9028-10. Southern Research Institute, Birmingham, Alabama. May, 1995. (EPRI Report)

54. *Hydrogen Chloride And Hydrogen Fluoride Emission Factors For The NAPAP Inventory,* EPA-600/7-85-041, U. S. Environmental Protection Agency, October 1985.

55. *Electric Utility Trace Substances Synthesis Report, Volume 1,* Report TR-104614, Electric Power Research Institute, Palo Alto, CA, November 1994.

56. *Locating And Estimating Air Emissions From Sources Of Chromium*, EPA-450/4-84-007g, U. S. Environmental Protection Agency, July 1984.

57. *Locating And Estimating Air Emissions From Sources Of Formaldehyde*, (Revised), EPA-450/4-91-012, U. S. Environmental Protection Agency, March 1991.

58. *Estimating Air Toxics Emissions From Coal And Oil Combustion Sources*, EPA-450/2-89-001, Radian Corporation, Project Officer: Dallas W. Safriet, Research Triangle Park, NC, April 1989.

59. *Canadian Coal-Fired Plants, Phase I: Final Report And Appendices*, Report for the Canadian Electrical Association, R&D, Montreal, Quebec, Contract Number 001G194, Report by Battelle, Pacific Northwest Laboratories, Richland, WA.

60. R. Meij, Auteru dr., *The Fate Of Trace Elements At Coal-Fired Plants*, Report No. 2561-MOC 92-3641, Rapport te bestellen bij; bibliotheek N.V. KEMA, February 13, 1992.

61. *Locating And Estimating Air Emissions From Sources Of Manganese*, EPA-450/4-84-007h, September 1985.

62. Results of the September 10 and 11, 1991 Mercury Removal Tests on the Units 1 & 2, and Unit 3 Scrubber Systems at the NSP Sherco Plant in Becker, Minnesota. Interpoll Laboratories, Inc., Circle Pines, Minnesota. October 30, 1991.

63. Results of the November 5, 1991 Air Toxic Emission Study on the No. 1, 3 & 4 Boilers at the NSP Black Dog Plant. Interpoll Laboratories, Inc., Circle Pines, Minnesota. January 3, 1992.

64. Results of the January 1992 Air Toxic Emission Study on the No. 2 Boiler at the NSP Black Dog Plant. Interpoll Laboratories, Inc., Circle Pines, Minnesota. May 4, 1992.

65. Results of the May 29, 1990 Trace Metal Characterization Study on Units 1 and 2 at the Sherburne County Generating Station in Becker, Minnesota. Interpoll Laboratories, Inc., Circle Pines, Minnesota. July, 1990.

66. Results of the May 1, 1990 Trace Metal Characterization Study on Units 1 and 2 at the Sherburne County Generating Station. Interpoll Laboratories, Inc., Circle Pines, Minnesota. July 18, 1990.

67. Results of the March 1990 Trace Metal Characterization Study on Unit 3 at the Sherburne County Generating Station. Interpoll Laboratories, Circle Pines, Minnesota. June 7, 1990.

68. Field Chemical Emissions Monitoring Project: Site 19 Emissions Monitoring. Radian Corporation, Austin, Texas. April, 1993. (EPRI Report)

69. Field Chemical Emissions Monitoring Project: Site 20 Emissions Monitoring. Radian Corporation, Austin, Texas. March, 1994. (EPRI Report)

70. Characterizing Toxic Emissions from a Coal-Fired Power Plant Demonstrating the AFGD ICCT Project and a Plant Utilizing a Dry Scrubber /Baghhouse System. Final Draft Report. Springerville Generating Station Unit No. 2. Southern Research Insititute, Birmingham, Alabama. December, 1993.

71. *Emissions Of Reactive Volatile Organic Compounds From Utility Boilers*, EPA-600/7-80-111, U. S. Environmental Protection Agency, Washington, DC, May 1980.

72. *EPA/IFP European Workshop On The Emission Of Nitrous Oxide For Fuel Combustion*, EPA Contract No. 68-02-4701, Ruiel-Malmaison, France, June 1-2, 1988.

73. R. Clayton, *et al.*, *NO_x Field Study*, EPA-600/2-89-006, U. S. Environmental Protection Agency, Research Triangle Park, NC, February 1989.

74. L. E. Amand, and S. Anderson, "Emissions of Nitrous Oxide from Fluidized Bed Boilers", Presented at the Tenth International Conference on Fluidized Bed Combustor, San Francisco, CA, 1989.

75. *Alternative Control Techniques Document--NO_x Emissions From Utility Boilers*, EPA-453/R-94-023, Office of Air Quality Standards, Research Triangle Park, NC, 1994.

76. Alliance Technologies Corporation, *Evaluation of Significant Anthropogenic Sources of Radiatively Important Trace Gases*, U. S. Environmental Protection Agency, Office of Research and Development, Research Triangle Park, NC, 1990.

77. R. A. Winschel, Richard, "The Relationship of Carbon Dioxide Emissions with Coal Rank and Sulfur Content," *Journal of the Air and Waste Management Association*, Vol. 40, no. 6, pp. 861-865, June 1990.

1.2 Anthracite Coal Combustion

1.2.1 General[1-5]

Coal is a complex combination of organic matter and inorganic ash formed over eons from successive layers of fallen vegetation. Coals are classified by rank according to their progressive alteration in the natural metamorphosis from lignite to anthracite. Coal rank depends on volatile matter, fixed carbon, inherent moisture, and oxygen, although no one parameter defines rank. Typically coal rank increases as the amount of fixed carbon increases and the amount of volatile matter decreases.

Anthracite coal is a high-ranking coal with more fixed carbon and less volatile matter than bituminous, subbituminous, or lignite varieties. Anthracite also has higher ignition and ash fusion temperatures. In the U.S., nearly all anthracite is mined in northeastern Pennsylvania and consumed in Pennsylvania and its surrounding states. The only significant amount of anthracite is used for steam/electric production. Anthracite currently accounts for only a small fraction of the total quantity of coal combusted in the U.S. The anthracite burned is primarily reclaim from old production as no new anthracite is mined.

Another form of anthracite coal burned in boilers is anthracite refuse, commonly known as culm. Culm was produced as breaker reject material from the mining/sizing of anthracite coal and was typically dumped by miners on the ground near operating mines. It is estimated that there are over 16 million tons of culm scattered in piles throughout northeastern Pennsylvania. The heating value of culm is typically in the 2,500 to 5,000 British thermal units/pound (Btu/lb) range, as compared to 12,000 to 14,000 Btu/lb for anthracite coal.

1.2.2 Firing Practices[6-8]

Due to its low volatile matter content and non-clinkering characteristics, anthracite coal is primarily used in medium-sized industrial and institutional stoker boilers equipped with stationary or traveling grates. Anthracite coal is not used in spreader stokers because of its low volatile matter content and relatively high ignition temperature. This fuel may also be burned in pulverized coal-fired (PC-fired) units, but, due to ignition difficulties, this practice is limited to only a few plants in eastern Pennsylvania. Anthracite coal has also been widely used in hand-fired furnaces. Culm has been combusted primarily in fluidized bed combustion (FBC) boilers because of its high ash content and low heating value.

Combustion of anthracite coal on a traveling grate is characterized by a coal bed 3 to 5 inches in depth and a high blast of underfire air at the rear or dumping end of the grate. This high blast of air lifts incandescent fuel particles and combustion gases from the grate and reflects the particles against a long rear arch over the grate towards the front of the fuel bed where fresh or "green" fuel enters. This special furnace arch design is required to assist in the ignition of the green fuel.

A second type of stoker boiler used to burn anthracite coal is the underfeed stoker. Various types of underfeed stokers are used in industrial boiler applications but the most common for anthracite coal firing is the single-retort side-dump stoker with stationary grates. In this unit, coal is fed intermittently to the fuel bed by a ram. In very small units the coal is fed continuously by a

screw. Feed coal is pushed through the retort and upward towards the tuyere blocks. Air is supplied through the tuyere blocks on each side of the retort and through openings in the side grates. Overfire air (OFA) is commonly used with underfeed stokers to provide combustion air and turbulence in the flame zone directly above the active fuel bed.

In PC-fired boilers, the fuel is pulverized to the consistency of powder and pneumatically injected through burners into the furnace. Injected coal particles burn in suspension within the furnace region of the boiler. Hot flue gases rise from the furnace and provide heat exchange with boiler tubes in the walls and upper regions of the boiler. In general, PC-fired boilers operate either in a wet-bottom or dry-bottom mode; because of its high ash fusion temperature, anthracite coal is burned in dry-bottom furnaces.

For anthracite culm, combustion in conventional boiler systems is difficult due to the fuel's high ash content, high moisture content, and low heating value. However, the burning of culm in an FBC system was demonstrated at a steam generation plant in Pennsylvania. The FBC system consists of inert particles (e. g., rock and ash) through which air is blown so that the bed behaves as a fluid. Anthracite coal enters in the space above the bed and burns in the bed. Fluidized beds can handle fuels with moisture contents approaching 70 percent (total basis) because of the large thermal mass represented by the hot inert bed particles. Fluidized beds can also handle fuels with ash contents as high as 75 percent. Heat released by combustion is transferred to in-bed steam-generating tubes. Limestone may be added to the bed to capture sulfur dioxide SO_2 formed by combustion of fuel sulfur.

1.2.3 Emissions[2,6,8]

Emissions from coal combustion depend on coal type and composition, the design type and capacity of the boiler, the firing conditions, load, the type of control devices, and the level of equipment maintenance. Emissions from anthracite coal firing primarily include particulate matter (PM), sulfur oxides (SO_x), nitrogen oxides (NO_x), and carbon monoxide (CO); and trace amounts of organic compounds and trace elements.

Particulate Matter -

PM emissions from anthracite coal combustion are a function of furnace firing configuration, firing practices (boiler load, quantity and location of underfire air, soot blowing, fly ash reinjection, etc.), and the ash content of the coal. PC-fired boilers emit the highest quantity of PM per unit of fuel because they fire the anthracite in suspension, which results in a high percentage of ash carryover into exhaust gases. Traveling grate stokers and hand-fired units produce less PM per unit of fuel fired, and coarser particulates, because combustion takes place in a quiescent fuel bed without significant ash carryover into the exhaust gases. In general, PM emissions from traveling grate stokers will increase during soot blowing and fly ash reinjection and with higher fuel bed underfeed air flowrates. Smoke production during combustion is rarely a problem, because of anthracite's low volatile matter content.

Sulfur Oxides -

Limited data are available on the emission of gaseous pollutants from anthracite combustion. It is assumed, based on bituminous coal combustion data, that a large fraction of the fuel sulfur is emitted as SO_x. SO_x emissions are directly proportional to the sulfur content of fuel. Some minor differences will occur from unit to unit, however, due to (1) ash partitioning between fly ash and bottom ash and (2) the sodium content of the coal (which tends to react with and bind coal sulfur in the bottom ash as sodium sulfite or sodium sulfate). For FBC boilers, SO_x emissions are inversely proportional, in general, to the molar ratio of calcium (in the limestone) to sulfur (in the fuel) added to the bed.[8]

Nitrogen Oxides[8] -

NO_x emissions are lower in traveling grate and underfeed stokers compared to PC-fired boilers. Underfeed and traveling grate stokers have large furnace areas and consequently lower volumetric- and surface area-based heat release rates. Lower heat release rates reduce peak combustion temperatures and, hence, contribute to lower NO_x emissions. In addition, the partially staged combustion that naturally occurs in all stokers due to the use of underfire and overfire air contributes to reduced NO_x emissions relative to PC-fired units. The low operating temperatures which characterize FBC boilers firing culm also favor relatively low NO_x emissions. Reducing boiler load tends to decrease combustion intensity which, in turn, leads to decreased NO_x emissions for all boiler types.

Carbon Monoxide -

CO and total organic compound (TOC) emissions are dependent on combustion efficiency. Generally their emission rates, defined as mass of emissions per unit of heat input, decrease with increasing boiler size. Organic compound emissions are expected to be lower for PC-fired units and higher for underfeed and overfeed stokers due to relative combustion efficiency levels.

1.2.4 Controls[6,8]

Controls on anthracite-fired boilers have mainly have been applied to reduce PM emissions. The most efficient particulate controls—fabric filters, electrostatic precipitators (ESP), and scrubbers—have been installed on large pulverized anthracite-fired boilers. In fabric filters (baghouses), particulate-laden dust passes through a set of filters mounted inside the collector housing. Dust particles in the inlet gas are collected on the filters by inertial impaction, diffusion, direct interception, and sieving. The collection efficiencies of fabric filters or coal-fired boilers can exceed 99 percent.

Particulate collection in an ESP occurs in three steps: suspended particles are given an electrical charge; the charged particles migrate to a collecting electrode of opposite polarity while subjected to a diverging electric field; and the collected PM is dislodged from the collecting electrodes. Removal of the collected PM is accomplished mechanically by rapping or vibrating the collecting electrodes. When applied to anthracite coal-fired boilers, ESPs are only 90 to 97 percent efficient, because of the characteristic high resistivity of low sulfur anthracite fly ash. It is reported that higher efficiencies can be achieved using larger ESPs combined with flue gas conditioning.

The most widely used wet scrubbers for anthracite coal-fired boilers are venturi scrubbers. In a typical venturi scrubber, the particle-laden gas first contacts the liquor stream in the core and throat of the venturi section. The gas and liquid streams then pass through the annular orifice formed by the core and throat, atomizing the liquid into droplets which are impacted by particles in the gas stream. Impaction results mainly from the high differential velocity between the gas stream and the atomized droplets. The droplets are then removed from the gas stream by centrifugal action in a cyclone separator and (if present) a mist eliminator section.

Wet scrubbers have reported PM collection efficiencies of 90 percent or greater. Gaseous emissions such as SO_2, NO_x, CO, and organics may also be absorbed to a significant extent in a wet scrubber. Operational problems can occur with wet scrubbers due to clogged spray nozzles, sludge deposits, dirty recirculation water, improper water levels, and unusually low pressure drops. Mechanical collectors, or cyclones, use centrifugal separation to remove PM from flue gas streams. At the entrance of the cyclone, a spin is imparted to the particle-laden gas. This spin creates a centrifugal force which causes the PM to move away from the axis of rotation and toward the walls of the cyclone. Particles which contact the walls of the cyclone tube are directed to a dust collection hopper

where they are deposited. Mechanical collectors typically have PM collection efficiencies up to 80 percent.

Emission factors and ratings for criteria pollutants from anthracite coal combustion are given in Tables 1.2-1, 1.2-2, and 1.2-3. Tables in this section present emission factors on a weight basis (lb/ton). To convert to an energy basis (lb/MMBtu), divide by a heating value of 24.6 MMBtu/ton. Cumulative particle size distribution data for uncontrolled and controlled boilers burning pulverized anthracite coal are given in Table 1.2-4. Figure 1.2-1 presents cumulative size-specific emission factors for stokers burning anthracite coal. Emission factors for speciated organic compounds are given in Table 1.2-5. Emission factors for TOCs and methane from burning anthracite are given in Table 1.2-6. Emission factors for speciated metals from stoker boilers firing anthracite coal are given in Table 1.2-7.

1.2.5 Updates Since the Fifth Edition

The Fifth Edition was released in January 1995. Revisions to this section since that date are summarized below. For further detail, consult the memoranda describing each supplement or the background report for this section. These and other documents can be found on the CHIEF electronic bulletin board (919-541-5742), or on the new EFIG home page (http://www.epa.gov/oar/oaqps/efig/).

Supplement A, February 1996

- An SCC (A2104001000) was provided for residential space heaters.

Supplement B, October 1996

- Text was enhanced concerning anthracite coal.
- Text was enhanced concerning emissions of SO_x, NO_x, and CO.
- Text was added concerning PM and SO_2 controls.
- Emission factor tables were rearranged so that criteria pollutants appear first.
- Mathematical errors were corrected for CO, TOC, and mercury.
- Emission factors were corrected for speciated organic compounds.

Table 1.2-1. EMISSION FACTORS FOR SO_x AND NO_x COMPOUNDS FROM UNCONTROLLED ANTHRACITE COAL COMBUSTORS[a]

Source Category	SO_x		NO_x	
	Emission Factor (lb/ton)	EMISSION FACTOR RATING	Emission Factor (lb/ton)	EMISSION FACTOR RATING
Stoker-fired boilers[c] (SCC 1-01-001-02, 1-02-001-04, 1-03-001-02)	39S[b]	B	9.0	C
FBC boilers[d] (no SCC)	2.9	E	1.8	E
Pulverized coal boilers[e] (SCC 1-01-001-01, 1-02-001-01, 1-03-001-01)	39S[b]	B	18	B
Residential space heaters[e] (SCC A2104001000)	39S[b]	B	3	B

[a] Units are lb of pollutant/ton of coal burned. To convert from lb/ton to kg/Mg, multiply by 0.5. SCC = Source Classification Code.
[b] S = weight percent sulfur. For example, if the sulfur content is 3.4%, then S = 3.4.
[c] References 9-10.
[d] Reference 11. FBC boilers burning culm fuel; all other sources burning anthracite coal.
[e] Reference 2.

Table 1.2-2. EMISSION FACTORS FOR CO AND CARBON DIOXIDE (CO_2) FROM UNCONTROLLED ANTHRACITE COAL COMBUSTORS[a]

Source Category	CO		CO_2	
	Emission Factor (lb/ton)	EMISSION FACTOR RATING	Emission Factor (lb/ton)	EMISSION FACTOR RATING
Stoker-fired boilers[b] (SCC 1-01-001-02, 1-02-001-04, 1-03-001-02)	0.6	B	5,680	C
FBC boilers[c] (no SCC)	0.6	E	ND	NA

[a] Units are lb of pollutant/ton of coal burned. To convert from lb/ton to kg/Mg, multiply by 0.5. SCC = Source Classification Code. ND = no data. NA = not applicable.
[b] References 2,9,12.
[c] Reference 11. FBC boilers burning culm fuel; all other sources burning anthracite coal.

Table 1.2-3. EMISSION FACTORS FOR PM AND LEAD (Pb) FROM UNCONTROLLED ANTHRACITE COAL COMBUSTORS[a]

Source Category	Filterable PM		Condensible PM		Pb	
	Emission Factor (lb/ton)	EMISSION FACTOR RATING	Emission Factor (lb/ton)	EMISSION FACTOR RATING	Emission Factor (lb/ton)	EMISSION FACTOR RATING
Stoker-fired boilers[b] (SCC 1-01-001-02, 1-02-001-04, 1-03-001-02)	0.8A[c]	C	0.08A[c]	C	8.9 E-03	E
Hand-fired units[d] (SCC 1-02-002-07, 1-03-001-03)	10	B	ND	NA	ND	NA

[a] Units are lb of pollutant/ton of coal burned. To convert from lb/ton to kg/Mg, multiply by 0.5. SCC = Source Classification Code. ND = no data.
NA = not applicable.
[b] References 9-10,13-14.
[c] A = ash content of fuel, weight %. For example, if the ash content is 5%, then A = 5.
[d] Reference 2.

Table 1.2-4. CUMULATIVE PARTICLE SIZE DISTRIBUTION AND SIZE-SPECIFIC EMISSION FACTORS FOR DRY BOTTOM BOILERS BURNING PULVERIZED ANTHRACITE COAL[a]

EMISSION FACTOR RATING: D

Particle Size[b] (μm)	Cumulative Mass % ≤ Stated Size			Cumulative Emission Factor As Fired[c] (lb/ton)		
		Controlled[d]			Controlled[d]	
	Uncontrolled	Multiple Cyclone	Baghouse	Uncontrolled	Multiple Cyclone	Baghouse
15	32	63	79	3.2A[e]	1.26A	0.016A
10	23	55	67	2.3A	1.10A	0.013A
6	17	46	51	1.7A	0.92A	0.010A
2.5	6	24	32	0.6A	0.48A	0.006A
1.25	2	13	21	0.2A	0.26A	0.004A
1.00	2	10	18	0.2A	0.20A	0.004A
0.625	1	7	—[f]	0.1A	0.14A	—[f]
TOTAL	100	100	100	10A	2A	0.02A

[a] Reference 15. Source Classification Codes are 1-01-001-01, 1-02-001-01, and 1-03-001-01.
[b] Expressed as aerodynamic equivalent diameter.
[c] Units are lb of pollutant/ton of coal burned. To convert from lb/ton to kg/Mg, multiply by 0.5.
[d] Estimated control efficiency for multiple cyclone is 80%; for baghouse, 99.8%.
[e] A = coal ash weight %, as fired. For example, if ash content is 5%, then A = 5.
[f] Insufficient data.

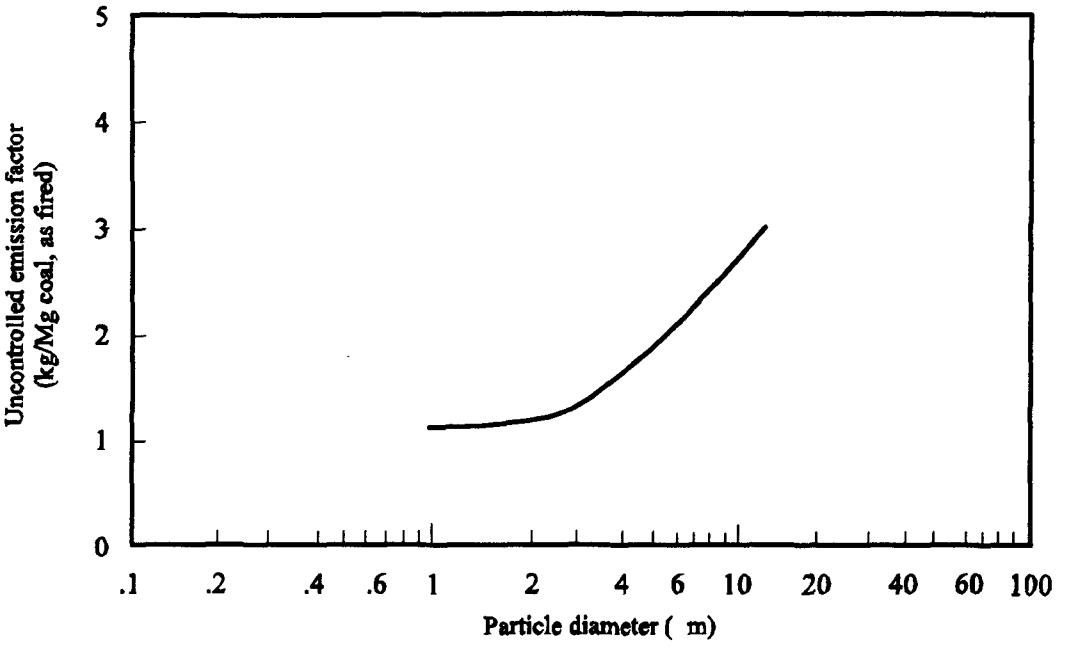

Figure 1.2-1. Cumulative size-specific emission factors for traveling grate stokers burning anthracite coal.

Table 1.2-5. EMISSION FACTORS FOR SPECIATED ORGANIC COMPOUNDS FROM ANTHRACITE COAL COMBUSTORS[a]

EMISSION FACTOR RATING: E

Pollutant	Stoker-Fired Boilers[b] (SCC 1-01-001-02, 1-02-001-04, 1-03-001-02)	Residential Space Heaters[c] (SCC A2-10-400-1000)	
	Emission Factor (lb/ton)	Emission Factor Range (lb/ton)	Average Emission Factor (lb/ton)
Acenaphthene	ND	1.1 E-05 - 2.9 E-05	2.2 E-05
Acenaphthylene	ND	1.1 E-05 - 2.2 E-04	8.6 E-05
Anthanthrene	ND	1.5 E-07 - 8.8 E-07	5.7 E-07
Anthracene	ND	7.0 E-06 - 3.7 E-05	2.5 E-05
Benzo(a)anthracene	ND	1.1 E-05 - 1.6 E-04	7.1 E-05
Benzo(a)pyrene	ND	3.1 E-06 - 7.0 E-06	5.3 E-06
Benzo(e)pyrene	ND	3.5 E-06 - 1.0 E-05	6.2 E-06
Benzo(g,h,i,) perylene	ND	3.1 E-06 - 9.5 E-06	5.5 E-06
Benzo(k)fluoranthrene	ND	1.1 E-05 - 4.5 E-05	2.5 E-05
Biphenyl	2.5 E-02	ND	ND
Chrysene	ND	1.8 E-05 - 1.8 E-04	8.3 E-05
Coronene	ND	8.8 E-07 - 6.4 E-06	3.9 E-06
Fluoranthrene	ND	7.5 E-05 - 2.7 E-04	1.7 E-04
Fluorene	ND	7.0 E-06 - 4.1 E-05	2.5 E-05
Indeno(123-cd) perylene	ND	3.5 E-06 - 1.1 E-05	6.9 E-06
Naphthalene	1.3 E-01	7.0 E-06 - 4.8 E-04	2.2 E-04
Perylene	ND	6.1 E-07 - 1.8 E-06	1.2 E-06
Phenanthrene	6.8 E-03	7.1 E-05 - 3.4 E-04	2.4 E-04
Pyrene	ND	4.2 E-05 - 1.9 E-04	1.2 E-04

[a] Units are lb of pollutant/ton of anthracite coal burned. To convert from lb/ton to kg/Mg, multiply by 0.5. SCC = Source Classification Code. ND = no data.
[b] Reference 13.
[c] Reference 16.

Table 1.2-6. EMISSION FACTORS FOR TOC AND METHANE (CH_4) FROM ANTHRACITE COAL COMBUSTORS[a]

EMISSION FACTOR RATING: E

Source Category	TOC Emission Factor (lb/ton)	CH_4 Emission Factor (lb/ton)
Stoker fired boilers[b] (SCC 1-01-001-02, 1-02-001-04, 1-03-001-02)	0.30	ND
Residential space heaters[c] (A2-10-400-1000)	ND	8

[a] Units are lb of pollutant/ton of coal burned. To convert from lb/ton to kg/Mg, multiply by 0.5. SCC = Source Classification Code. ND = no data.
[b] Reference 13.
[c] Reference 16.

Table 1.2-7. EMISSION FACTORS FOR SPECIATED METALS FROM ANTHRACITE COAL COMBUSTION IN STOKER FIRED BOILERS[a]

EMISSION FACTOR RATING: E

Pollutant	Emission Factor Range (lb/ton)	Average Emission Factor (lb/ton)
Arsenic	BDL - 2.4 E-04	1.9 E-04
Antimony	BDL	BDL
Beryllium	3.0 E-05 - 5.4 E-04	3.1 E-04
Cadmium	4.5 E-05 - 1.1 E-04	7.1 E-05
Chromium	5.9 E-03 - 4.9 E-02	2.8 E-02
Manganese	9.8 E-04 - 5.3 E-03	3.6 E-03
Mercury	8.7 E-05 - 1.7 E-04	1.3 E-04
Nickel	7.8 E-03 - 3.5 E-02	2.6 E-02
Selenium	4.7 E-04 - 2.1 E-03	1.3 E-03

[a] Reference 13. Units are lb of pollutant/ton of coal burned. To convert from lb/ton to kg/Mg, multiply by 0.5. Source Classification Codes are 1-01-001-02, 1-02-001-04, and 1-03-001-02. BDL = below detection limit.

References For Section 1.2

1. *Minerals Yearbook,* 1978-79, Bureau of Mines, U. S. Department of the Interior, Washington, DC, 1981.

2. *Air Pollutant Emission Factors*, APTD-0923, U. S. Environmental Protection Agency, Research Triangle Park, NC, April 1970.

3. P. Bender, D. Samela, W. Smith, G. Tsoumpas, and J. Laukaitis, "Operating Experience at the Shamokin Culm Burning Steam Generation Plant", Presented at the 76th Annual Meeting of the Air Pollution Control Association, Atlanta, GA, June 1983.

4. *Chemical Engineers' Handbook, Fourth Edition*, J. Perry, Editor, McGraw-Hill Book Company, New York, NY, 1963.

5. B. Bartok and A. F. Sarofim (Eds.), *Fossil Fuel Combustion, A Source Book,* John Wiley And Sons, Inc., 1991, p.239.

6. *Background Information Document For Industrial Boilers*, EPA 450/3-82-006a, U. S. Environmental Protection Agency, Research Triangle Park, NC, March 1982.

7. *Steam: Its Generation And Use, Thirty-Seventh Edition*, The Babcock & Wilcox Company, New York, NY, 1963.

8. *Emission Factor Documentation For AP-42 Section 1.2 — Anthracite Coal Combustion (Draft)*, Technical Support Division, Office of Air Quality Planning and Standards, U. S. Environmental Protection Agency, Research Triangle Park, NC, April 1993.

9. *Source Sampling Of Anthracite Coal Fired Boilers, RCA-Electronic Components, Lancaster, PA, Final Report*, Scott Environmental Technology, Inc., Plumsteadville, PA, April 1975.

10. *Source Sampling Of Anthracite Coal Fired Boilers, Shippensburg State College, Shippensburg, PA, Final Report*, Scott Environmental Technology, Inc, Plumsteadville, PA, May 1975.

11. *Design, Construction, Operation, And Evaluation Of A Prototype Culm Combustion Boiler/Heater Unit*, Contract No. AC21-78ET12307, U. S. Dept. of Energy, Morgantown Energy Technology Center, Morgantown, WV, October 1983.

12. *Source Sampling Of Anthracite Coal Fired Boilers, West Chester State College, West Chester, PA*, Pennsylvania Department of Environmental Resources, Harrisburg, PA 1980.

13. *Emissions Assessment Of Conventional Stationary Combustion Systems*, EPA Contract No. 68-02-2197, GCA Corp., Bedford, MA, October 1980.

14. *Source Sampling Of Anthracite Coal Fired Boilers, Pennhurst Center, Spring City, PA, Final Report*, TRC Environmental Consultants, Inc., Weathersfield, CT, January 23, 1980.

15. *Inhalable Particulate Source Category Report For External Combustion Sources*, EPA Contract No. 68-02-3156, Acurex Corporation, Mountain View, CA, January 1985.

16. *Characterization Of Emissions Of PAHs From Residential Coal Fired Space Heaters*, Vermont Agency of Environmental Conservation, 1983.

1.3 Fuel Oil Combustion

1.3.1 General[1-3]

Two major categories of fuel oil are burned by combustion sources: distillate oils and residual oils. These oils are further distinguished by grade numbers, with Nos. 1 and 2 being distillate oils; Nos. 5 and 6 being residual oils; and No. 4 being either distillate oil or a mixture of distillate and residual oils. No. 6 fuel oil is sometimes referred to as Bunker C. Distillate oils are more volatile and less viscous than residual oils. They have negligible nitrogen and ash contents and usually contain less than 0.3 percent sulfur (by weight). Distillate oils are used mainly in domestic and small commercial applications, and include kerosene and diesel fuels. Being more viscous and less volatile than distillate oils, the heavier residual oils (Nos. 5 and 6) may need to be heated for ease of handling and to facilitate proper atomization. Because residual oils are produced from the residue remaining after the lighter fractions (gasoline, kerosene, and distillate oils) have been removed from the crude oil, they contain significant quantities of ash, nitrogen, and sulfur. Residual oils are used mainly in utility, industrial, and large commercial applications.

1.3.2 Firing Practices[4]

The major boiler configurations for fuel oil-fired combustors are watertube, firetube, cast iron, and tubeless design. Boilers are classified according to design and orientation of heat transfer surfaces, burner configuration, and size. These factors can all strongly influence emissions as well as the potential for controlling emissions.

Watertube boilers are used in a variety of applications ranging from supplying large amounts of process steam to providing space heat for industrial facilities. In a watertube boiler, combustion heat is transferred to water flowing through tubes which line the furnace walls and boiler passes. The tube surfaces in the furnace (which houses the burner flame) absorb heat primarily by radiation from the flames. The tube surfaces in the boiler passes (adjacent to the primary furnace) absorb heat primarily by convective heat transfer.

Firetube boilers are used primarily for heating systems, industrial process steam generators, and portable power boilers. In firetube boilers, the hot combustion gases flow through the tubes while the water being heated circulates outside of the tubes. At high pressures and when subjected to large variations in steam demand, firetube units are more susceptible to structural failure than watertube boilers. This is because the high-pressure steam in firetube units is contained by the boiler walls rather than by multiple small-diameter watertubes, which are inherently stronger. As a consequence, firetube boilers are typically small and are used primarily where boiler loads are relatively constant. Nearly all firetube boilers are sold as packaged units because of their relatively small size.

A cast iron boiler is one in which combustion gases rise through a vertical heat exchanger and out through an exhaust duct. Water in the heat exchanger tubes is heated as it moves upward through the tubes. Cast iron boilers produce low pressure steam or hot water, and generally burn oil or natural gas. They are used primarily in the residential and commercial sectors.

Another type of heat transfer configuration used on smaller boilers is the tubeless design. This design incorporates nested pressure vessels with water in between the shells. Combustion gases are fired into the inner pressure vessel and are then sometimes recirculated outside the second vessel.

1.3.3 Emissions[5]

Emissions from fuel oil combustion depend on the grade and composition of the fuel, the type and size of the boiler, the firing and loading practices used, and the level of equipment maintenance. Because the combustion characteristics of distillate and residual oils are different, their combustion can produce significantly different emissions. In general, the baseline emissions of criteria and noncriteria pollutants are those from uncontrolled combustion sources. Uncontrolled sources are those without add-on air pollution control (APC) equipment or other combustion modifications designed for emission control. Baseline emissions for sulfur dioxide (SO_2) and particulate matter (PM) can also be obtained from measurements taken upstream of APC equipment.

1.3.3.1 Particulate Matter Emissions[6-15] -

Particulate matter emissions depend predominantly on the grade of fuel fired. Combustion of lighter distillate oils results in significantly lower PM formation than does combustion of heavier residual oils. Among residual oils, firing of No. 4 or No. 5 oil usually produces less PM than does the firing of heavier No. 6 oil.

In general, PM emissions depend on the completeness of combustion as well as on the oil ash content. The PM emitted by distillate oil-fired boilers primarily comprises carbonaceous particles resulting from incomplete combustion of oil and is not correlated to the ash or sulfur content of the oil. However, PM emissions from residual oil burning are related to the oil sulfur content. This is because low-sulfur No. 6 oil, either refined from naturally low-sulfur crude oil or desulfurized by one of several processes, exhibits substantially lower viscosity and reduced asphaltene, ash, and sulfur contents, which results in better atomization and more complete combustion.

Boiler load can also affect particulate emissions in units firing No. 6 oil. At low load (50 percent of maximum rating) conditions, particulate emissions from utility boilers may be lowered by 30 to 40 percent and by as much as 60 percent from small industrial and commercial units. However, no significant particulate emission reductions have been noted at low loads from boilers firing any of the lighter grades. At very low load conditions (approximately 30 percent of maximum rating), proper combustion conditions may be difficult to maintain and particulate emissions may increase significantly.

1.3.3.2 Sulfur Oxides Emissions[1-2,6-9,16] -

Sulfur oxides (SO_x) emissions are generated during oil combustion from the oxidation of sulfur contained in the fuel. The emissions of SO_x from conventional combustion systems are predominantly in the form of SO_2. Uncontrolled SO_x emissions are almost entirely dependent on the sulfur content of the fuel and are not affected by boiler size, burner design, or grade of fuel being fired. On average, more than 95 percent of the fuel sulfur is converted to SO_2, about 1 to 5 percent is further oxidized to sulfur trioxide (SO_3), and 1 to 3 percent is emitted as sulfate particulate. SO_3 readily reacts with water vapor (both in the atmosphere and in flue gases) to form a sulfuric acid mist.

1.3.3.3 Nitrogen Oxides Emissions[1-2,6-10,15,17-27] -

Oxides of nitrogen (NO_x) formed in combustion processes are due either to thermal fixation of atmospheric nitrogen in the combustion air ("thermal NO_x"), or to the conversion of chemically bound nitrogen in the fuel ("fuel NO_x"). The term NO_x refers to the composite of nitric oxide (NO) and nitrogen dioxide (NO_2). Test data have shown that for most external fossil fuel combustion systems, over 95 percent of the emitted NO_x is in the form of nitric oxide (NO). Nitrous oxide (N_2O) is not included in NO_x but has recently received increased interest because of atmospheric effects.

Experimental measurements of thermal NO_x formation have shown that NO_x concentration is exponentially dependent on temperature, and proportional to N_2 concentration in the flame, the square root of O_2 concentration in the flame, and the residence time. Thus, the formation of thermal NO_x is affected by four factors: (1) peak temperature, (2) fuel nitrogen concentration, (3) oxygen concentration, and (4) time of exposure at peak temperature. The emission trends due to changes in these factors are generally consistent for all types of boilers: an increase in flame temperature, oxygen availability, and/or residence time at high temperatures leads to an increase in NO_x production.

Fuel nitrogen conversion is the more important NO_x-forming mechanism in residual oil boilers. It can account for 50 percent of the total NO_x emissions from residual oil firing. The percent conversion of fuel nitrogen to NO_x varies greatly, however; typically from 20 to 90 percent of nitrogen in oil is converted to NO_x. Except in certain large units having unusually high peak flame temperatures, or in units firing a low nitrogen content residual oil, fuel NO_x generally accounts for over 50 percent of the total NO_x generated. Thermal fixation, on the other hand, is the dominant NO_x-forming mechanism in units firing distillate oils, primarily because of the negligible nitrogen content in these lighter oils. Because distillate oil-fired boilers are usually smaller and have lower heat release rates, the quantity of thermal NO_x formed in them is less than that of larger units which typically burn residual oil.[28]

A number of variables influence how much NO_x is formed by these two mechanisms. One important variable is firing configuration. NO_x emissions from tangentially (corner) fired boilers are, on the average, less than those of horizontally opposed units. Also important are the firing practices employed during boiler operation. Low excess air (LEA) firing, flue gas recirculation (FGR), staged combustion (SC), reduced air preheat (RAP), low NO_x burners (LNBs), or some combination thereof may result in NO_x reductions of 5 to 60 percent. Load reduction (LR) can likewise decrease NO_x production. Nitrogen oxide emissions may be reduced from 0.5 to 1 percent for each percentage reduction in load from full load operation. It should be noted that most of these variables, with the exception of excess air, only influence the NO_x emissions of large oil-fired boilers. Low excess air-firing is possible in many small boilers, but the resulting NO_x reductions are less significant.

1.3.3.4 Carbon Monoxide Emissions[29-32] -

The rate of carbon monoxide (CO) emissions from combustion sources depends on the oxidation efficiency of the fuel. By controlling the combustion process carefully, CO emissions can be minimized. Thus if a unit is operated improperly or not well maintained, the resulting concentrations of CO (as well as organic compounds) may increase by several orders of magnitude. Smaller boilers, heaters, and furnaces tend to emit more of these pollutants than larger combustors. This is because smaller units usually have a higher ratio of heat transfer surface area to flame volume than larger combustors have; this leads to reduced flame temperature and combustion intensity and, therefore, lower combustion efficiency.

The presence of CO in the exhaust gases of combustion systems results principally from incomplete fuel combustion. Several conditions can lead to incomplete combustion, including insufficient oxygen (O_2) availability; poor fuel/air mixing; cold-wall flame quenching; reduced combustion temperature; decreased combustion gas residence time; and load reduction (i. e., reduced combustion intensity). Since various combustion modifications for NO_x reduction can produce one or more of the above conditions, the possibility of increased CO emissions is a concern for environmental, energy efficiency, and operational reasons.

1.3.3.5 Organic Compound Emissions[29-39] -

Small amounts of organic compounds are emitted from combustion. As with CO emissions, the rate at which organic compounds are emitted depends, to some extent, on the combustion

efficiency of the boiler. Therefore, any combustion modification which reduces the combustion efficiency will most likely increase the concentrations of organic compounds in the flue gases.

Total organic compounds (TOCs) include VOCs, semi-volatile organic compounds, and condensable organic compounds. Emissions of VOCs are primarily characterized by the criteria pollutant class of unburned vapor phase hydrocarbons. Unburned hydrocarbon emissions can include essentially all vapor phase organic compounds emitted from a combustion source. These are primarily emissions of aliphatic, oxygenated, and low molecular weight aromatic compounds which exist in the vapor phase at flue gas temperatures. These emissions include all alkanes, alkenes, aldehydes, carboxylic acids, and substituted benzenes (e. g., benzene, toluene, xylene, and ethyl benzene).

The remaining organic emissions are composed largely of compounds emitted from combustion sources in a condensed phase. These compounds can almost exclusively be classed into a group known as polycyclic organic matter (POM), and a subset of compounds called polynuclear aromatic hydrocarbons (PAH or PNA). There are also PAH-nitrogen analogs. Information available in the literature on POM compounds generally pertains to these PAH groups.

Formaldehyde is formed and emitted during combustion of hydrocarbon-based fuels including coal and oil. Formaldehyde is present in the vapor phase of the flue gas. Formaldehyde is subject to oxidation and decomposition at the high temperatures encountered during combustion. Thus, larger units with efficient combustion (resulting from closely regulated air-fuel ratios, uniformly high combustion chamber temperatures, and relatively long gas retention times) have lower formaldehyde emission rates than do smaller, less efficient combustion units.

1.3.3.6 Trace Element Emissions[29-32,40-44] -

Trace elements are also emitted from the combustion of oil. For this update of AP-42, trace metals included in the list of 189 hazardous air pollutants under Title III of the 1990 Clean Air Act Amendments are considered. The quantity of trace elements entering the combustion device depends solely on the fuel composition. The quantity of trace metals emitted from the source depends on combustion temperature, fuel feed mechanism, and the composition of the fuel. The temperature determines the degree of volatilization of specific compounds contained in the fuel. The fuel feed mechanism affects the separation of emissions into bottom ash and fly ash. In general, the quantity of any given metal emitted depends on the physical and chemical properties of the element itself; concentration of the metal in the fuel; the combustion conditions; and the type of particulate control device used, and its collection efficiency as a function of particle size.

Some trace metals concentrate in certain waste particle streams from a combustor (bottom ash, collector ash, flue gas particulate), while others do not. Various classification schemes to describe this partitioning have been developed. The classification scheme used by Baig, et al.[44] is as follows:

- Class 1: Elements which are approximately equally distributed between fly ash and bottom ash, or show little or no small particle enrichment.

- Class 2: Elements which are enriched in fly ash relative to bottom ash, or show increasing enrichment with decreasing particle size.

- Class 3: Elements which are emitted in the gas phase.

By understanding trace metal partitioning and concentration in fine particulate, it is possible to postulate the effects of combustion controls on incremental trace metal emissions. For example, several NO_x controls for boilers reduce peak flame temperatures (e. g., SC, FGR, RAP, and LR). If combustion temperatures are reduced, fewer Class 2 metals will initially volatilize, and fewer will be available for subsequent condensation and enrichment on fine PM. Therefore, for combustors with particulate controls, lower volatile metal emissions should result due to improved particulate removal. Flue gas emissions of Class 1 metals (the non-segregating trace metals) should remain relatively unchanged.

Lower local O_2 concentrations is also expected to affect segregating metal emissions from boilers with particle controls. Lower O_2 availability decreases the possibility of volatile metal oxidation to less volatile oxides. Under these conditions, Class 2 metals should remain in the vapor phase as they enter the cooler sections of the boiler. More redistribution to small particles should occur and emissions should increase. Again, Class 1 metal emissions should remain unchanged.

1.3.3.7 Greenhouse Gases[45-50] -

Carbon dioxide (CO_2), methane (CH_4), and nitrous oxide (N_2O) emissions are all produced during fuel oil combustion. Nearly all of the fuel carbon (99 percent) in fuel oil is converted to CO_2 during the combustion process. This conversion is relatively independent of firing configuration. Although the formation of CO acts to reduce CO_2 emissions, the amount of CO produced is insignificant compared to the amount of CO_2 produced. The majority of the fuel carbon not converted to CO_2 is due to incomplete combustion in the fuel stream.

Formation of N_2O during the combustion process is governed by a complex series of reactions and its formation is dependent upon many factors. Formation of N_2O is minimized when combustion temperatures are kept high (above 1475°F) and excess air is kept to a minimum (less than 1 percent). Additional sampling and research is needed to fully characterize N_2O emissions and to understand the N_2O formation mechanism. Emissions can vary widely from unit to unit, or even from the same unit at different operating conditions. Average emission factors based on reported test data have been developed for conventional oil combustion systems.

Methane emissions vary with the type of fuel and firing configuration, but are highest during periods of incomplete combustion or low-temperature combustion, such as the start-up or shut-down cycle for oil-fired boilers. Typically, conditions that favor formation of N_2O also favor emissions of CH_4.

1.3.4 Controls

Control techniques for criteria pollutants from fuel oil combustion may be classified into three broad categories: fuel substitution, combustion modification, and postcombustion control. Emissions of noncriteria pollutants such as particulate phase metals have been controlled through the use of post combustion controls designed for criteria pollutants. Fuel substitution reduces SO_2 or NO_x and involves burning a fuel with a lower sulfur or nitrogen content, respectively. Particulate matter will generally be reduced when a lighter grade of fuel oil is burned.[6,8,11] Combustion modification includes any physical or operational change in the furnace or boiler and is applied primarily for NO_x control purposes, although for small units, some reduction in PM emissions may be available through improved combustion practice. Postcombustion control is a device after the combustion of the fuel and is applied to control emissions of PM, SO_2, and NO_x.

1.3.4.1 Particulate Matter Controls[51] -

Control of PM emissions from residential and commercial units is accomplished by improving burner servicing and by incorporating appropriate equipment design changes to improve oil atomization and combustion aerodynamics. Optimization of combustion aerodynamics using a flame retention device, swirl, and/or recirculation is considered to be the best approach toward achieving the triple goals of low PM emissions, low NO_x emissions, and high thermal efficiency.

Large industrial and utility boilers are generally well-designed and well-maintained so that soot and condensable organic compound emissions are minimized. Particulate matter emissions are more a result of emitted fly ash with a carbon component in such units. Therefore, postcombustion controls (mechanical collectors, ESP, fabric filters, etc.) are necessary to reduce PM emissions from these sources where local regulations dictate.

Mechanical collectors, a prevalent type of control device, are primarily useful in controlling particulates generated during soot blowing, during upset conditions, or when a very dirty heavy oil is fired. For these situations, high-efficiency cyclonic collectors can achieve up to 85 percent control of particulate. Under normal firing conditions, or when a clean oil is combusted, cyclonic collectors are not nearly so effective because of the high percentage of small particles (less than 3 micrometers in diameter) emitted.

Electrostatic precipitators (ESPs) are commonly used in oil-fired power plants. Older precipitators, usually small, typically remove 40 to 60 percent of the emitted PM. Because of the low ash content of the oil, greater collection efficiency may not be required. Currently, new or rebuilt ESPs can achieve collection efficiencies of up to 90 percent.

In fabric filtration, a number of filtering elements (bags) along with a bag cleaning system are contained in a main shell structure incorporating dust hoppers. The particulate removal efficiency of the fabric filter system is dependent on a variety of particle and operational characteristics including particle size distribution, particle cohesion characteristics, and particle electrical resistivity. Operational parameters that affect collection efficiency include air-to-cloth ratio, operating pressure loss, cleaning sequence, interval between cleaning, and cleaning intensity. The structure of the fabric filter, filter composition, and bag properties also affect collection efficiency. Collection efficiencies of baghouses may be more than 99 percent.

Scrubbing systems have also been installed on oil-fired boilers to control both sulfur oxides and particulate. These systems can achieve SO_2 removal efficiencies of 90 to 95 percent and particulate control efficiencies of 50 to 60 percent.

1.3.4.2 SO_2 Controls[52-53] -

Commercialized postcombustion flue gas desulfurization (FGD) processes use an alkaline reagent to absorb SO_2 in the flue gas and produce a sodium or a calcium sulfate compound. These solid sulfate compounds are then removed in downstream equipment. Flue gas desulfurization technologies are categorized as wet, semi-dry, or dry depending on the state of the reagent as it leaves the absorber vessel. These processes are either regenerable (such that the reagent material can be treated and reused) or nonregenerable (in which case all waste streams are de-watered and discarded).

Wet regenerable FGD processes are attractive because they have the potential for better than 95 percent sulfur removal efficiency, have minimal waste water discharges, and produce a saleable sulfur product. Some of the current nonregenerable calcium-based processes can, however, produce a saleable gypsum product.

To date, wet systems are the most commonly applied. Wet systems generally use alkali slurries as the SO_x absorbent medium and can be designed to remove greater than 90 percent of the incoming SO_x. Lime/limestone scrubbers, sodium scrubbers, and dual alkali scrubbing are among the commercially proven wet FGD systems. Effectiveness of these devices depends not only on control device design but also on operating variables.

1.3.4.3 NO_x Controls[41,54-55] -

In boilers fired on crude oil or residual oil, the control of fuel NO_x is very important in achieving the desired degree of NO_x reduction since fuel NO_x typically accounts for 60 to 80 percent of the total NO_x formed. Fuel nitrogen conversion to NO_x is highly dependent on the fuel-to-air ratio in the combustion zone and, in contrast to thermal NO_x formation, is relatively insensitive to small changes in combustion zone temperature. In general, increased mixing of fuel and air increases nitrogen conversion which, in turn, increases fuel NO_x. Thus, to reduce fuel NO_x formation, the most common combustion modification technique is to suppress combustion air levels below the theoretical amount required for complete combustion. The lack of oxygen creates reducing conditions that, given sufficient time at high temperatures, cause volatile fuel nitrogen to convert to N_2 rather than NO.

Several techniques are used to reduce NO_x emissions from fuel oil combustion. In addition to fuel substitution, the primary techniques can be classified into one of two fundamentally different methods — combustion controls and postcombustion controls. Combustion controls reduce NO_x by suppressing NO_x formation during the combustion process while postcombustion controls reduce NO_x emissions after their formation. Combustion controls are the most widely used method of controlling NO_x formation in all types of boilers and include low excess air, burners out of service, biased-burner firing, flue gas recirculation, overfire air, and low-NO_x burners. Postcombustion control methods include selective noncatalytic reduction (SNCR) and selective catalytic reduction (SCR). These controls can be used separately, or combined to achieve greater NO_x reduction.

Operating at low excess air involves reducing the amount of combustion air to the lowest possible level while maintaining efficient and environmentally compliant boiler operation. NO_x formation is inhibited because less oxygen is available in the combustion zone. Burners out of service involves withholding fuel flow to all or part of the top row of burners so that only air is allowed to pass through. This method simulates air staging, or overfire air conditions, and limits NO_x formation by lowering the oxygen level in the burner area. Biased-burner firing involves firing the lower rows of burners more fuel-rich than the upper row of burners. This method provides a form of air staging and limits NO_x formation by limiting the amount of oxygen in the firing zone. These methods may change the normal operation of the boiler and the effectiveness is boiler-specific. Implementation of these techniques may also reduce operational flexibility; however, they may reduce NO_x by 10 to 20 percent from uncontrolled levels.

Flue gas recirculation involves extracting a portion of the flue gas from the economizer section or air heater outlet and readmitting it to the furnace through the furnace hopper, the burner windbox, or both. This method reduces the concentration of oxygen in the combustion zone and may reduce NO_x by as much as 40 to 50 percent in some boilers.

Overfire air is a technique in which a percentage of the total combustion air is diverted from the burners and injected through ports above the top burner level. Overfire air limits NO_x by (1) suppressing thermal NO_x by partially delaying and extending the combustion process resulting in less intense combustion and cooler flame temperatures; (2) a reduced flame temperature that limits thermal NO_x formation, and/or (3) a reduced residence time at peak temperature which also limits thermal NO_x formation.

Low NO_x burners are applicable to tangential and wall-fired boilers of various sizes. They have been used as a retrofit NO_x control for existing boilers and can achieve approximately 35 to 55 percent reduction from uncontrolled levels. They are also used in new boilers to meet NSPS limits. Low NO_x burners can be combined with overfire air to achieve even greater NO_x reduction (40 to 60 percent reduction from uncontrolled levels).

SNCR is a postcombustion technique that involves injecting ammonia or urea into specific temperature zones in the upper furnace or convective pass. The ammonia or urea reacts with NO_x in the flue gas to produce nitrogen and water. The effectiveness of SNCR depends on the temperature where reagents are injected; mixing of the reagent in the flue gas; residence time of the reagent within the required temperature window; ratio of reagent to NO_x; and the sulfur content of the fuel that may create sulfur compound that deposit in downstream equipment. There is not as much commercial experience to base effectiveness on a wide range of boiler types; however, in limited applications, NO_x reductions of 25 to 40 percent have been achieved.

SCR is another postcombustion technique that involves injecting ammonia into the flue gas in the presence of a catalyst to reduce NO_x to nitrogen and water. The SCR reactor can be located at various positions in the process including before an air heater and particulate control device, or downstream of the air heater, particulate control device, and flue gas desulfurization systems. The performance of SCR is influenced by flue gas temperature, fuel sulfur content, ammonia to NO_x ratio, inlet NO_x concentration, space velocity, and catalyst condition. NO_x emission reductions of 75 to 85 percent have been achieved through the use of SCR on oil-fired boilers operating in the U.S.

Tables 1.3-1 and 1.3-2 present emission factors for uncontrolled criteria pollutants from fuel oil combustion. Tables in this section present emission factors on a volume basis (lb/10^3gal). To convert to an energy basis (lb/MMBtu), divide by a heating value of 150 MMBtu/10^3gal for Nos. 4, 5, 6, and residual fuel oil, and 140 MMBtu/10^3gal for No. 2 and distillate fuel oil. Tables 1.3-3, 1.3-4, 1.3-5, and 1.3-6 present cumulative size distribution data and size-specific emission factors for particulate emissions from uncontrolled and controlled fuel oil combustion. Figures 1.3-1, 1.3-2, 1.3-3, and 1.3-4 present size-specific emission factors for particulate emissions from uncontrolled and controlled fuel oil combustion. Emission factors for N_2O, POM, and formaldehyde are presented in Table 1.3-7. Emission factors for speciated organic compounds are presented in Table 1.3-8. Emission factors for trace elements are given in Table 1.3-9. Emission factors for metals are given in Table 1.3-10. Default emission factors for CO_2 are presented in Table 1.3-11. A summary of various SO_2 and NO_x controls for fuel-oil-fired boilers is presented in Table 1.3-12 and 1.3-13, respectively.

1.3.5 Updates Since the Fifth Edition

The Fifth Edition was released in January 1995. Revisions to this section since that date are summarized below. For further detail, consult the memoranda describing each supplement or the background report for this section. These and other documents can be found on the CHIEF electronic bulletin board (919-541-5742), or on the new EFIG home page (http://www.epa.gov/oar/oaqps/efig/).

Supplement A, February 1996

The formulas presented in the footnotes for filterable PM were moved into the table.

For SO_2 and SO_3 emission factors, text was added to the table footnotes to clarify that "S" is a weight percent and not a fraction. A similar clarification was made to the CO and NO_x footnotes. SCC A2104004/A2104011 was provided for residential furnaces.

For industrial boilers firing No. 6 and No. 5 oil, the methane emission factor was changed from 1 to 1.0 to show two significant figures.

For SO_2 and SO_3 factors, text was added to the table footnotes to clarify that "S" is a weight percent and not a fraction.

- The N_2O, POM, and formaldehyde factors were corrected.
- Table 1.3-10 was incorrectly labeled 1.1-10. This was corrected.

Supplement B, October 1996

- Text was added concerning firing practices.

  Factors for N_2O, POM, and formaldehyde were added.

  New data for filterable PM were used to create a new PM factor for residential oil-fired furnaces.

  Many new factors were added for toxic organics, toxic metals from distillate oil, and toxic metals from residual oil.

  A table was added for new CO_2 emission factors.

Table 1.3-1. CRITERIA POLLUTANT EMISSION FACTORS FOR UNCONTROLLED FUEL OIL COMBUSTION[a]

Firing Configuration (SCC)[a]	SO_2[b]		SO_3[c]		NO_x[d]		CO[e,f]		Filterable PM[g]	
	Emission Factor ($lb/10^3$ gal)	EMISSION FACTOR RATING	Emission Factor ($lb/10^3$ gal)	EMISSION FACTOR RATING	Emission Factor ($lb/10^3$ gal)	EMISSION FACTOR RATING	Emission Factor ($lb/10^3$ gal)	EMISSION FACTOR RATING	Emission Factor ($lb/10^3$ gal)	EMISSION FACTOR RATING
Utility boilers										
No. 6 oil fired, normal firing (1-01-004-01)	157S	A	5.7S	C	67	A	5	A	9.19(S)+3.22	A
No. 6 oil fired, tangential firing (1-01-004-04)	157S	A	5.7S	C	42	A	5	A	9.19(S)+3.22	A
No. 5 oil fired, normal firing (1-01-004-05)	157S	A	5.7S	C	67	A	5	A	10	B
No. 5 oil fired, tangential firing (1-01-004-06)	157S	A	5.7S	C	42	A	5	A	10	B
No. 4 oil fired, normal firing (1-01-005-04)	150S	A	5.7S	C	67	A	5	A	7	B
No. 4 oil fired, tangential firing (1-01-005-05)	150S	A	5.7S	C	42	A	5	A	7	B
No. 6 oil fired (1-02-004-01/02/03)	157S	A	2S	A	55	A	5	A	9.19(S)+3.22	A
No. 5 oil fired (1-02-004-04)	157S	A	2S	A	55	A	5	A	10	B
Distillate oil fired (1-02-005-01/02/03)	142S	A	2S	A	20	A	5	A	2	A
No. 4 oil fired (1-02-005-04)	150S	A	2S	A	20	A	5	A	7	B
Commercial/institutional										
No. 6 oil fired (1-03-004-01/02/03)	157S	A	2S	A	55	A	5	A	9.19(S)+3.22	A
No. 5 oil fired (1-03-004-04)	157S	A	2S	A	55	A	5	A	10	B
Distillate oil fired (1-03-005-01/02/03)	142S	A	2S	A	20	A	5	A	2	A
No. 4 oil fired (1-03-005-04)	150S	A	2S	A	20	A	5	A	7	B
Residential furnace (A2104004/A2104011)	142S	A	2S	A	18	A	5	A	0.4[h]	B

Table 1.3-1 (cont.).

[a] To convert from lb/10^3 gal to kg/10^3 L, multiply by 0.120. SCC = Source Classification Code.

[b] References 1-2,6-9,14,56-60. S indicates that the weight % of sulfur in the oil should be multiplied by the value given. For example, if the fuel is 1% sulfur, then S = 1.

[c] References 1-2,6-8,16,57-60. S indicates that the weight % of sulfur in the oil should be multiplied by the value given. For example, if the fuel is 1% sulfur, then S = 1.

[d] References 6-7,15,19,22,56-62. Expressed as NO_2. Test results indicate that at least 95% by weight of NO_x is NO for all boiler types except residential furnaces, where about 75% is NO. For utility vertical fired boilers use 105 lb/10^3 gal at full load and normal (>15%) excess air. Nitrogen oxides emissions from residual oil combustion in industrial and commercial boilers are related to fuel nitrogen content, estimated by the following empirical relationship: lb NO_2 /10^3 gal = 20.54 + 104.39(N), where N is the weight % of nitrogen in the oil. For example, if the fuel is 1% nitrogen, then N = 1.

[e] References 6-8,14,17-19,56-61. CO emissions may increase by factors of 10 to 100 if the unit is improperly operated or not well maintained.

[f] Emission factors for CO_2 from oil combustion should be calculated using lb CO_2/10^3 gal oil = 256C (Distillate), 286C (Residual), or 250C (Kerosene) where C indicates weight % of carbon in the oil. For example, if the fuel is 86% carbon, then C = 86.

[g] References 6-8,10,13-15,56-60,62-63. Filterable PM is that particulate collected on or prior to the filter of an EPA Method 5 (or equivalent) sampling train. Particulate emission factors for residual oil combustion are, on average, a function of fuel oil sulfur content where S is the weight % of sulfur in oil. For example, if fuel oil is 1% sulfur, then S = 1.

[h] Based on data from new burner designs. Pre-1970's burner designs may emit filterable PM as high as 3.0 lb/10^3 gal.

Table 1.3-2. EMISSION FACTORS FOR TOTAL ORGANIC COMPOUNDS (TOC), METHANE, AND NONMETHANE TOC (NMTOC) FROM UNCONTROLLED FUEL OIL COMBUSTION[a]

EMISSION FACTOR RATING: A

Firing Configuration (SCC)	TOC[b] Emission Factor ($lb/10^3$ gal)	Methane[b] Emission Factor ($lb/10^3$ gal)	NMTOC[b] Emission Factor ($lb/10^3$ gal)
Utility boilers			
No. 6 oil fired, normal firing (1-01-004-01)	1.04	0.28	0.76
No. 6 oil fired, tangential firing (1-01-004-04)	1.04	0.28	0.76
No. 5 oil fired, normal firing (1-01-004-05)	1.04	0.28	0.76
No. 5 oil fired, tangential firing (1-01-004-06)	1.04	0.28	0.76
No. 4 oil fired, normal firing (1-01-005-04)	1.04	0.28	0.76
No. 4 oil fired, tangential firing (1-01-005-05)	1.04	0.28	0.76
Industrial boilers			
No. 6 oil fired (1-02-004-01/02/03)	1.28	1.00	0.28
No. 5 oil fired (1-02-004-04)	1.28	1.00	0.28
Distillate oil fired (1-02-005-01/02/03)	0.252	0.052	0.2
No. 4 oil fired (1-02-005-04)	0.252	0.052	0.2
Commercial/institutional/residential combustors			
No. 6 oil fired (1-03-004-01/02/03)	1.605	0.475	1.13
No. 5 oil fired (1-03-004-04)	1.605	0.475	1.13
Distillate oil fired (1-03-005-01/02/03)	0.556	0.216	0.34
No. 4 oil fired (1-03-005-04)	0.556	0.216	0.34
Residential furnace (A2104004/A2104011)	2.493	1.78	0.713

[a] To convert from $lb/10^3$ gal to $kg/10^3$ L, multiply by 0.12. SCC = Source Classification Code.
[b] References 29-32. Volatile organic compound emissions can increase by several orders of magnitude if the boiler is improperly operated or is not well maintained.

Table 1.3-3. CUMULATIVE PARTICLE SIZE DISTRIBUTION AND SIZE-SPECIFIC EMISSION FACTORS FOR UTILITY BOILERS FIRING RESIDUAL OIL[a]

Particle Size[b] (μm)	Cumulative Mass % ≤ Stated Size			Cumulative Emission Factor (lb/10^3 gal)					
		Controlled		Uncontrolled[c]		ESP Controlled[d]		Scrubber Controlled[e]	
	Uncon-trolled	ESP	Scrubber	Emission Factor	EMISSION FACTOR RATING	Emission Factor	EMISSION FACTOR RATING	Emission Factor	EMISSION FACTOR RATING
15	80	75	100	6.7A	C	0.05A	E	0.50A	D
10	71	63	100	5.9A	C	0.042A	E	0.050A	D
6	58	52	100	4.8A	C	0.035A	E	0.50A	D
2.5	52	41	97	4.3A	C	0.028A	E	0.48A	D
1.25	43	31	91	3.6A	C	0.021A	E	0.46A	D
1.00	39	28	84	3.3A	C	0.018A	E	0.42A	D
0.625	20	20	64	1.74	C	0.007A	E	0.32A	D
TOTAL	100	100	100	8.3A	C	0.067A	E	0.50A	D

[a] Reference 26. Source Classification Codes 1-01-004-01/04/05/06 and 1-01-005-04/05. To convert from lb/10^3 gal to kg/m^3, multiply by 0.120. ESP = electrostatic precipitator.

[b] Expressed as aerodynamic equivalent diameter.

[c] Particulate emission factors for residual oil combustion without emission controls are, on average, a function of fuel oil grade and sulfur content where S is the weight % of sulfur in the oil. For example, if the fuel is 1.00% sulfur, then S = 1.
No. 6 oil: A = 9.19(S) + 3.22 lb/10^3 gal
No. 5 oil: A = 10 lb/10^3 gal
No. 4 oil: A = 7 lb/10^3 gal

[d] Estimated control efficiency for ESP is 99.2%.

[e] Estimated control efficiency for scrubber is 94%

Table 1.3-4. CUMULATIVE PARTICLE SIZE DISTRIBUTION AND SIZE-SPECIFIC EMISSION FACTORS FOR INDUSTRIAL BOILERS FIRING RESIDUAL OIL[a]

Particle Size[b] (μm)	Cumulative Mass % ≤ Stated Size		Cumulative Emission Factor[c] (lb/10^3 gal)			
			Uncontrolled		Multiple Cyclone Controlled[d]	
	Uncontrolled	Multiple Cyclone Controlled	Emission Factor	EMISSION FACTOR RATING	Emission Factor	EMISSION FACTOR RATING
15	91	100	7.59A	D	1.67A	E
10	86	95	7.17A	D	1.58A	E
6	77	72	6.42A	D	1.17A	E
2.5	56	22	4.67A	D	0.33A	E
1.25	39	21	3.25A	D	0.33A	E
1.00	36	21	3.00A	D	0.33A	E
0.625	30	—[e]	2.50A	D	—[e]	NA
TOTAL	100	100	8.34A	D	1.67A	E

[a] Reference 26. Source Classification Codes 1-02-004-01/02/03/04 and 1-02-005-04. To convert from lb/10^3 gal to kg/10^3 L, multiply by 0.120. NA = not applicable.

[b] Expressed as aerodynamic equivalent diameter.

[c] Particulate emission factors for residual oil combustion without emission controls are, on average, a function of fuel oil grade and sulfur content where S is the weight % of sulfur in the oil. For example, if the fuel is 1.0% sulfur, then S = 1.
No. 6 oil: A = 9.19(S) + 3.22 lb/10^3 gal
No. 5 oil: A = 10 lb/10^3 gal
No. 4 oil: A = 7 lb/10^3 gal

[d] Estimated control efficiency for multiple cyclone is 80%.

[e] Insufficient data.

Table 1.3-5. CUMULATIVE PARTICLE SIZE DISTRIBUTION AND SIZE-SPECIFIC EMISSION FACTORS FOR UNCONTROLLED INDUSTRIAL BOILERS FIRING DISTILLATE OIL[a]

EMISSION FACTOR RATING: E

Particle Size[b] (μm)	Cumulative Mass % ≤ Stated Size	Cumulative Emission Factor ($lb/10^3$ gal)
15	68	1.33
10	50	1.00
6	30	0.58
2.5	12	0.25
1.25	9	0.17
1.00	8	0.17
0.625	2	0.04
TOTAL	100	2.00

[a] Reference 26. Source Classification Codes 1-02-005-01/02/03. To convert from $lb/10^3$ gal to $kg/10^3$ L, multiply by 0.12.
[b] Expressed as aerodynamic equivalent diameter.

Table 1.3-6. CUMULATIVE PARTICLE SIZE DISTRIBUTION AND SIZE-SPECIFIC EMISSION FACTORS FOR UNCONTROLLED COMMERCIAL BOILERS BURNING RESIDUAL OR DISTILLATE OIL[a]

EMISSION FACTOR RATING: D

Particle Size[b] (μm)	Cumulative Mass % ≤ Stated Size		Cumulative Emission Factor[c] ($lb/10^3$ gal)	
	Residual Oil	Distillate Oil	Residual Oil	Distillate Oil
15	78	60	6.50A	1.17
10	62	55	5.17A	1.08
6	44	49	3.67A	1.00
2.5	23	42	1.92A	0.83
1.25	16	38	1.33A	0.75
1.00	14	37	1.17A	0.75
0.625	13	35	1.08A	0.67
TOTAL	100	100	8.34A	2.00

[a] Reference 26. Source Classification Codes: 1-03-004-01/02/03/04 and 1-03-005-01/02/03/04. To convert from $lb/10^3$ gal to $kg/10^3$ L, multiply by 0.12.
[b] Expressed as aerodynamic equivalent diameter.
[c] Particulate emission factors for residual oil combustion without emission controls are, on average, a function of fuel oil grade and sulfur content where S is the weight % of sulfur in the fuel. For example, if the fuel is 1.0% sulfur, then S = 1.
No. 6 oil: $A = 9.19(S) + 3.22$ $lb/10^3$ gal.
No. 5 oil: $A = 10$ $lb/10^3$ gal
No. 4 oil: $A = 7$ $lb/10^3$ gal
No. 2 oil: $A = 2$ $lb/10^3$ gal

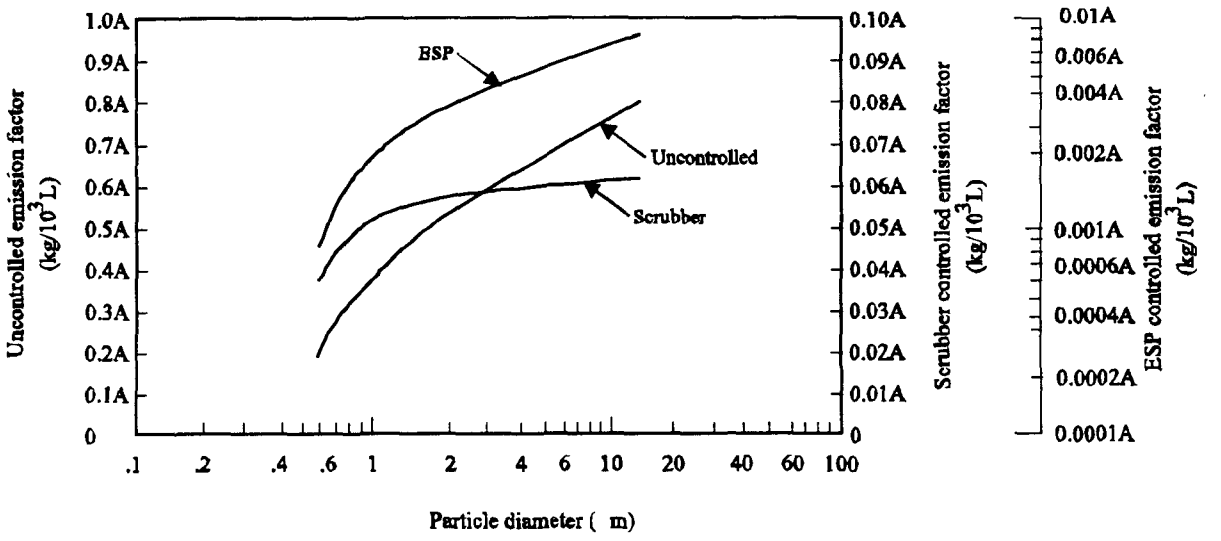

Figure 1.3-1. Cumulative size-specific emission factors for utility boilers firing residual oil.

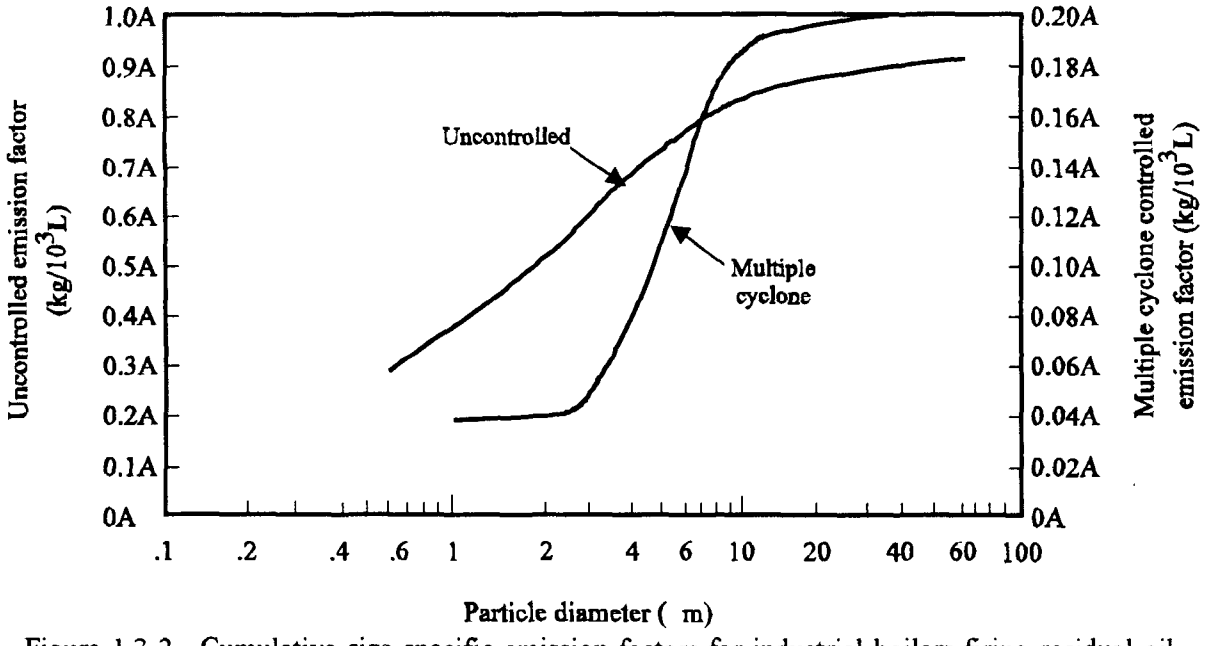

Figure 1.3-2. Cumulative size-specific emission factors for industrial boilers firing residual oil.

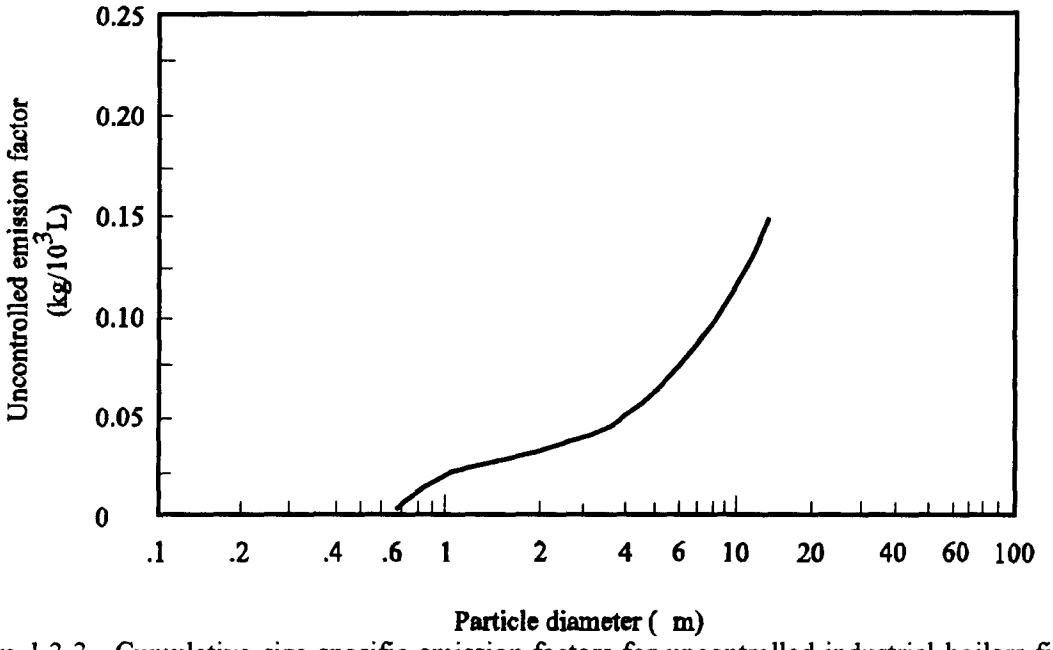

Figure 1.3-3. Cumulative size-specific emission factors for uncontrolled industrial boilers firing distillate oil.

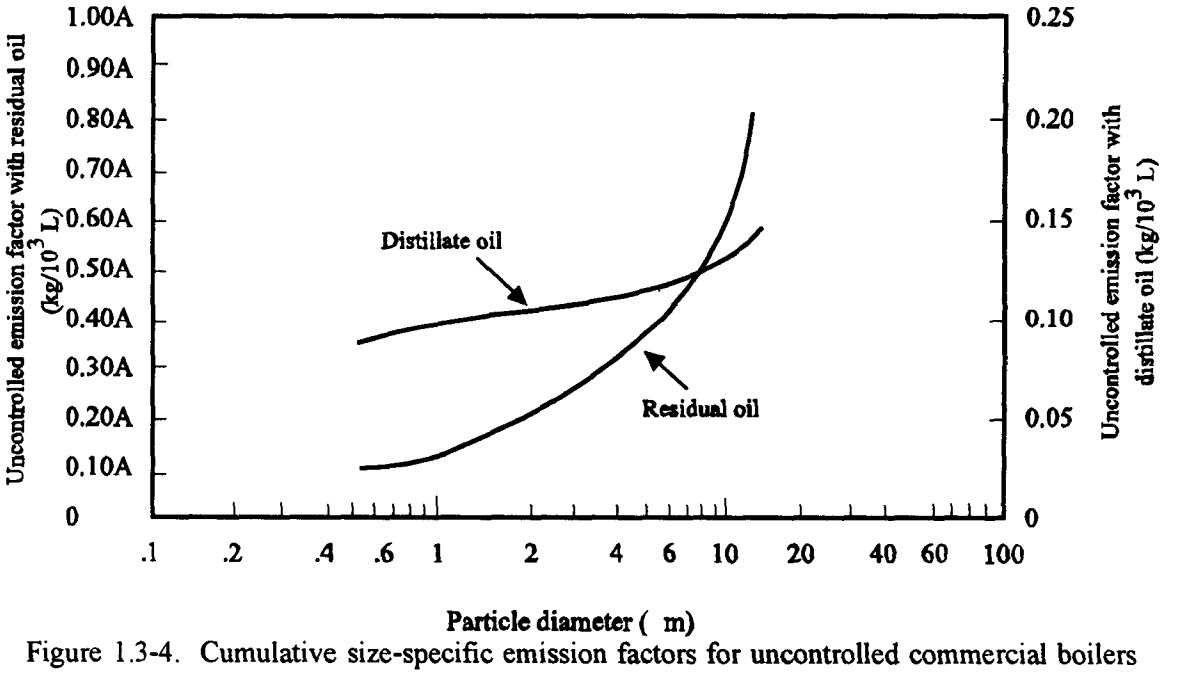

Figure 1.3-4. Cumulative size-specific emission factors for uncontrolled commercial boilers burning residual and distillate oil.

Table 1.3-7. EMISSION FACTORS FOR NITROUS OXIDE (N_2O), POLYCYCLIC ORGANIC MATTER (POM), AND FORMALDEHYDE (HCOH) FROM FUEL OIL COMBUSTION[a]

EMISSION FACTOR RATING: E

Firing Configuration (SCC)	Emission Factor ($lb/10^3$ gal)		
	N_2O[b]	POM[c]	HCOH[c]
Utility/industrial/commercial boilers			
No. 6 oil fired (1-01-004-01, 1-02-004-01, 1-03-004-01)	0.11	0.0011 - 0.0013[d]	0.024 - 0.061
Distillate oil fired (1-01-005-01, 1-02-005-01, 1-03-005-01)	0.11	0.0033[e]	0.035 - 0.061
Residential furnaces (A2104004/A2104011)	0.05	ND	ND

[a] To convert from $lb/10^3$ gal to $kg/10^3L$, multiply by 0.12. SCC = Source Classification Code. ND = no data.
[b] References 45-46. EMISSION FACTOR RATING = B.
[c] References 29-32.
[d] Particulate and gaseous POM.
[e] Particulate POM only.

Table 1.3-8. EMISSION FACTORS FOR SPECIATED ORGANIC COMPOUNDS FROM FUEL OIL COMBUSTION[a]

Organic Compound	Average Emission Factor[b] ($lb/10^3$ Gal)	EMISSION FACTOR RATING
Benzene	2.14E-04	C
Ethylbenzene	6.36E-05[c]	E
Formaldehyde[d]	3.30E-02	C
Naphthalene	1.13E-03	C
1,1,1-Trichloroethane	2.36E-04[c]	E
Toluene	6.20E-03	D
o-Xylene	1.09E-04[c]	E
Acenaphthene	2.11E-05	C
Acenaphthylene	2.53E-07	D
Anthracene	1.22E-06	C
Benz(a)anthracene	4.01E-06	C
Benzo(b,k)fluoranthene	1.48E-06	C
Benzo(g,h,i)perylene	2.26E-06	C
Chrysene	2.38E-06	C
Dibenzo(a,h) anthracene	1.67E-06	D
Fluoranthene	4.84E-06	C
Fluorene	4.47E-06	C
Indo(1,2,3-cd)pyrene	2.14E-06	C
Phenanthrene	1.05E-05	C
Pyrene	4.25E-06	C
OCDD	3.10E-09[c]	E

[a] Data are for residual oil fired boilers, Source Classification Codes (SCCs) 1-01-004-01/04.
[b] References 64-72. To convert from $lb/10^3$ gal to $kg/10^3$ L, multiply by 0.12.
[c] Based on data from one source test (Reference 67).
[d] The formaldehyde number presented here is based only on data from utilities using No. 6 oil. The number presented in Table 1.3-7 is based on utility, commercial, and industrial boilers.

Table 1.3-9. EMISSION FACTORS FOR TRACE ELEMENTS FROM DISTILLATE FUEL OIL COMBUSTION SOURCES[a]

EMISSION FACTOR RATING: E

Firing Configuration (SCC)	Emission Factor ($lb/10^{12}$ Btu)										
	As	Be	Cd	Co	Cr	Hg	Mn	Ni	Pb	Sb	Se
Distillate oil fired (1-01-005-01, 1-02-005-01, 1-03-005-01)	4.2	2.5	11	ND	48-67	3.0	14	18	8.9	ND	ND

[a] References 29-32,40-44. The emission factors in this table represent the ranges of factors reported in the literature. If only one data point was found, it is still reported in this table. To convert from $lb/10^{12}$ Btu to pg/J, multiply by 0.43. SCC = Source Classification Code. ND = no data.

Table 1.3-10. EMISSION FACTORS FOR METALS FROM NO. 6 FUEL OIL COMBUSTION[a]

Metal	Average Emission Factor[b] ($lb/10^3$ Gal)	EMISSION FACTOR RATING
Antimony	5.25E-03[c]	E
Arsenic	1.32E-03	C
Barium	2.57E-03	D
Beryllium	2.78E-05	C
Cadmium	3.98E-04	C
Chloride	3.47E-01	D
Chromium	8.45E-04	C
Chromium VI	2.48E-04	C
Cobalt	6.02E-03	D
Copper	1.76E-03	C
Fluoride	3.73E-02	D
Lead	1.51E-03	C
Manganese	3.00E-03	C
Mercury	1.13E-04	C
Molybdenum	7.87E-04	D
Nickel	8.45E-02	C
Phosphorous	9.46E-03	D
Selenium	6.83E-04	C
Vanadium	3.18E-02	D
Zinc	2.91E-02	D

[a] Data are for residual oil fired boilers, Source Classification Codes (SCCs) 1-01-004-01/04.
[b] References 64-72. To convert from $lb/10^3$ gal to $kg/10^3$ L, multiply by 0.12.
[c] References 29-32,40-44.

Table 1.3-11. DEFAULT CO_2 EMISSION FACTORS FOR LIQUID FUELS[a]

EMISSION FACTOR RATING: B

Fuel Type	%C[b]	Density[c] (lb/gal)	Emission Factor (lb/10^3 gal)
No. 1 (kerosene)	86.25	6.88	21,500
No. 2	87.25	7.05	22,300
Low Sulfur No. 6	87.26	7.88	25,000
High Sulfur No. 6	85.14	7.88	24,400

[a] Based on 99% conversion of fuel carbon content to CO_2. To convert from lb/gal to gram/cm^3, multiply by 0.12. To convert from lb/10^3 gal to kg/m^3, multiply by 0.12.
[b] Based on an average of fuel carbon contents given in references 73-74.
[c] References 73, 75.

Table 1.3-12. POSTCOMBUSTION SO_2 CONTROLS FOR FUEL OIL COMBUSTION SOURCES

Control Technology	Process	Typical Control Efficiencies	Remarks
Wet scrubber	Lime/limestone	80-95+%	Applicable to high-sulfur fuels, Wet sludge product
	Sodium carbonate	80-98%	5-430 MMBtu/hr typical application range, High reagent costs
	Magnesium oxide/hydroxide	80-95+%	Can be regenerated
	Dual alkali	90-96%	Uses lime to regenerate sodium-based scrubbing liquor
Spray drying	Calcium hydroxide slurry, vaporizes in spray vessel	70-90%	Applicable to low-and medium-sulfur fuels, Produces dry product
Furnace injection	Dry calcium carbonate/hydrate injection in upper furnace cavity	25-50%	Commercialized in Europe, Several U.S. demonstration projects underway
Duct injection	Dry sorbent injection into duct, sometimes combined with water spray	25-50+%	Several R&D and demonstration projects underway, Not yet Commercially available in the U.S.

Table 1.3-13. NO_x CONTROL OPTIONS FOR OIL-FIRED BOILERS[a]

Control Technique	Description Of Technique	NO_x Reduction Potential (%)		Range Of Application	Commercial Availability/ R&D Status	Comments
		Residual Oil	Distillate Oil			
Low Excess Air (LEA)	Reduction of combustion air	0 to 28	0 to 24	Generally excess O_2 can be reduced to 2.5% representing a 3% drop from baseline	Available for boilers with sufficient operational flexibility.	Added benefits included increase in boiler efficiency. Limited by increase in CO, HC, and smoke emissions.
Staged Combustion (SC)	Fuel-rich firing burners with secondary combustion air ports	20 to 50	17 to 44	70-90% burner stoichiometries can be used with proper installation of secondary air ports	Technique is applicable on packaged and field-erected units. However, not commercially available for all design types.	Best implemented on new units. Retrofit is probably not feasible for most units, especially packaged ones.
Burners Out of Service (BOOS)	One or more burners on air only. Remainder of burners firing fuel-rich	10 to 30	ND	Most effective on boilers with 4 or more burners in a square pattern.	Available.	Requires careful selection of BOOS pattern and control of air flow. May result in boiler de-rating unless fuel delivery system is modified.
Flue Gas Recirculation (FGR)	Recirculation of portion of flue gas to burners	15 to 30	58 to 73	Up to 25-30% of flue gas recycled. Can be implemented on most design types.	Available. Best suited for new units.	Requires extensive modifications to the burner and windbox. Possible flame instability at high FGR rates.
Flue Gas Recirculation Plus Staged Combustion	Combined techniques of FGR and staged combustion	25 to 53	73 to 77	Maximum FGR rates set at 25% for distillate oil and 20% for residual oil.	Available for boilers with sufficient operational flexibility.	May not be feasible on all existing boiler types. Best implemented on new units.

Table 1.3-13 (cont.).

Control Technique	Description Of Technique	NO_x Reduction Potential (%)		Range Of Application	Commercial Availability/ R&D Status	Comments
		Residual Oil	Distillate Oil			
Load Reduction (LR)	Reduction of air and fuel flow to all burners in service	33% decrease to 25% increase in NO_x	31% decrease to 17% increase in NO_x	Applicable to all boiler types and sizes. Load can be reduced to 25% of maximum.	Available in retrofit applications.	Technique not effective when it necessitates an increase in excess O_2 levels. LR possibly implemented in new designs as reduced combustion intensity (i. e., enlarged furnace plan area).
Low NO_x Burners (LNB)	New burner designs with controlled air/fuel mixing and increased heat dissipation	20 to 50	20 to 50	New burners described generally applicable to all boilers.	Commercially available.	Specific emissions data from industrial boilers equipped with LNB are lacking.
Reduced Air Preheat (RAP)	Bypass of combustion air preheater	5 to 16	ND	Combustion air temperature can be reduced to ambient conditions.	Available.	Application of this technique on new boilers requires installation of alternate heat recovery system (e. g., an economizer).
Selective Noncatalytic Reduction (SNCR)	Injection of NH_3 or urea as a reducing agent in the flue gas	40 to 70	40 to 70	Applicable for large packaged and field-erected watertube boilers. May not be feasible for fire-tube boilers.	Commercially offered but not widely demonstrated on large boilers.	Elaborate reagent injection, monitoring, and control system required. Possible load restrictions on boilers and air preheater fouling when burning high sulfur oil. Must have sufficient residence time at correct temperature.
Conventional Selective Catalytic Reduction (SCR)	Injections of NH_3 in the presence of a catalyst (usually upstream of air heater).	Up to 90% (estimated)	Up to 90% (estimated)	Typically large boiler designs	Commercially offered but not widely demonstrated.	Applicable to most boiler designs as a retrofit technology or for new boilers

Table 1.3-13 (cont.).

Control Technique	Description Of Technique	NO_x Reduction Potential (%)		Range Of Application	Commercial Availability/ R&D Status	Comments
		Residual Oil	Distillate Oil			
Air Heater (SCR)	Catalyst-coated baskets in the air heater.	40-65 (estimated)	40-65 (estimated)	Boilers with rotating-basket air heaters	Available but not widely demonstrated	Design must address pressure drop and maintain heat transfer.
Duct SCR	A smaller version of conventional SCR is placed in existing ductwork	30 (estimated)	30 (estimated)	Typically large boiler designs	Available but not widely demonstrated.	Location of SCR in duct is temperature dependent.
Activated Carbon SCR	Activated carbon catalyst, installed downstream of air heater.	ND	ND	Typically large boiler designs	Available but not widely demonstrated.	High pressure drop.

[a] ND = no data.

References For Section 1.3

1. W. S. Smith, *Atmospheric Emissions From Fuel Oil Combustion: An Inventory Guide*, 999-AP-2, U. S. Environmental Protection Agency, Washington, DC, November 1962.

2. J. A. Danielson (ed.), *Air Pollution Engineering Manual*, Second Edition, AP-40, U. S. Environmental Protection Agency, Research Triangle Park, NC, 1973. Out of Print.

3. *Fossil Fuel Fired Industrial Boilers — Background Information: Volume 1*, EPA-450/3-82-006a, U. S. Environmental Protection Agency, Research Triangle Park, NC, March 1982.

4. Emission Factor Documentation For AP-42, Section 1.3, Fuel Oil Combustion, Office of Air Quality Planning and Standards, U. S. Environmental Protection Agency, Research Triangle Park, NC, April 1993.

5. U. S. Environmental Protection Agency, "National Primary and Secondary Ambient Air Quality Standards", Code of Federal Regulations, Title 40, Part 50, U. S. Government Printing Office, Washington DC, 1991.

6. A. Levy, *et al.*, *A Field Investigation Of Emissions From Fuel Oil Combustion For Space Heating*, API Bulletin 4099, Battelle Columbus Laboratories, Columbia, OH, November 1971.

7. R. E. Barrett, *et al.*, *Field Investigation Of Emissions From Combustion Equipment For Space Heating*, EPA-R2-73-084a, U. S. Environmental Protection Agency, Research Triangle Park, NC, June 1973.

8. G. A. Cato, *et al.*, *Field Testing: Application Of Combustion Modifications To Control Pollutant Emissions From Industrial Boilers—Phase I*, EPA-650/2-74-078a, U. S. Environmental Protection Agency, Washington, DC, October 1974.

9. G. A. Cato, *et al.*, *Field Testing: Application Of Combustion Modifications To Control Pollutant Emissions From Industrial Boilers—Phase II*, EPA-600/ 2-76-086a, U. S. Environmental Protection Agency, Washington, DC, April 1976.

10. *Particulate Emission Control Systems For Oil Fired Boilers*, EPA-450/3-74-063, U. S. Environmental Protection Agency, Research Triangle Park, NC, December 1974.

11. C. W. Siegmund, "Will Desulfurized Fuel Oils Help?", *American Society Of Heating, Refrigerating And Air Conditioning Engineers Journal*, 11:29-33, April 1969.

12. F. A. Govan, *et al.*, "Relationships of Particulate Emissions Versus Partial to Full Load Operations for Utility-sized Boilers", *Proceedings Of Third Annual Industrial Air Pollution Control Conference*, Knoxville, TN, March 29-30, 1973.

13. Emission Test Reports, Docket No. OAQPS-78-1, Category II-I-257 through 265, Office Of Air Quality Planning And Standards, U. S. Environmental Protection Agency, Research Triangle Park, NC, 1972 through 1974.

14. C. Leavitt, *et al.*, *Environmental Assessment Of An Oil Fired Controlled Utility Boiler*, EPA-600/7-80-087, U. S. Environmental Protection Agency, Washington, DC, April 1980.

15. W. A. Carter and R. J. Tidona, *Thirty-day Field Tests of Industrial Boilers: Site 2—Residual-oil-fired Boiler*, EPA-600/7-80-085b, U. S. Environmental Protection Agency, Washington, DC, April 1980.

16. *Primary Sulfate Emissions From Coal And Oil Combustion*, EPA Contract No. 68-02-3138, TRW, Inc., Redondo Beach, CA, February 1980.

17. W. Bartok, *et al.*, *Systematic Field Study Of NO_x Emission Control Methods For Utility Boilers*, APTD-1163, U. S. Environmental Protection Agency, Research Triangle Park, NC, December 1971.

18. A. R. Crawford, *et al.*, *Field Testing: Application Of Combustion Modifications To Control NO_x Emissions From Utility Boilers*, EPA-650/2-74-066, U. S. Environmental Protection Agency, Washington, DC, June 1974.

19. J. F. Deffner, *et al.*, *Evaluation Of Gulf Econojet Equipment With Respect To Air Conservation*, Report No. 731RC044, Gulf Research and Development Company, Pittsburgh, PA, December 18, 1972.

20. C. E. Blakeslee and H.E. Burbach, "Controlling NO_x Emissions From Steam Generators," *Journal Of The Air Pollution Control Association*, 23:37-42, January 1973.

21. R. E. Hall, *et al.*, *A Study Of Air Pollutant Emissions From Residential Heating Systems*, EPA-650/2-74-003, U. S. Environmental Protection Agency, Washington, DC, January 1974.

22. R. J. Milligan, *et al.*, *Review Of NO_x Emission Factors For Stationary Fossil Fuel Combustion Sources*, EPA-450/4-79-021, U. S. Environmental Protection Agency, Research Triangle Park, NC, September 1979.

23. K. J. Lim, *et al.*, *Technology Assessment Report For Industrial Boiler Applications: NO_x Combustion Modification*, EPA-600/7-79-178f, U. S. Environmental Protection Agency, Washington, DC, December 1979.

24. D. W. Pershing, *et al.*, *Influence Of Design Variables On The Production Of Thermal And Fuel NO From Residual Oil And Coal Combustion*, Air: Control of NO_x and SO_x Emissions, New York, American Institute of Chemical Engineers, 1975.

25. R. Clayton, *et al.*, *N_2O Field Study*, EPA-600/2-89-006, U. S. Environmental Protection Agency, Research Triangle Park, NC, February 1989.

26. *Evaluation Of Fuel-Based Additives For N_2O And Air Toxic Control In Fluidized Bed Combustion Boilers*, EPRI Contract No. RP3197-02, Acurex Report No. FR-91-101-/ESD, (Draft Report) Acurex Environmental, Mountain View, CA, June 17, 1991.

27. *Code of Federal Regulations 40, Parts 53 to 60*, July 1, 1991.

28. James Ekmann, *et al.*, *Comparison Of Shale Oil And Residual Fuel Combustion*, In Symposium Papers, New Fuels And Advances In Combustion Technologies, Sponsored By Institute Of Gas Technology, March 1979.

29. N. F. Suprenant, *et al.*, *Emissions Assessment Of Conventional Stationary Combustion Systems, Volume I: Gas And Oil Fired Residential Heating Sources*, EPA-600/7-79-029b, U. S. Environmental Protection Agency, Washington, DC, May 1979.

30. C. C. Shih, *et al.*, *Emissions Assessment Of Conventional Stationary Combustion Systems, Volume III: External Combustion Sources For Electricity Generation*, EPA Contract No. 68-02-2197, TRW, Inc., Redondo Beach, CA, November 1980.

31. N. F. Suprenant, *et al.*, *Emissions Assessment Of Conventional Stationary Combustion System, Volume IV: Commercial Institutional Combustion Sources*, EPA Contract No. 68-02-2197, GCA Corporation, Bedford, MA, October 1980.

32. N. F. Suprenant, *et al.*, *Emissions Assessment Of Conventional Stationary Combustion Systems, Volume V: Industrial Combustion Sources*, EPA Contract No. 68-02-2197, GCA Corporation, Bedford, MA, October 1980.

33. *Particulate Polycyclic Organic Matter*, National Academy of Sciences, Washington, DC, 1972.

34. *Vapor Phase Organic Pollutants—Volatile Hydrocarbons And Oxidation Products*, National Academy of Sciences, Washington, DC, 1976.

35. H. Knierien, *A Theoretical Study Of PCB Emissions From Stationary Sources*, EPA-600/7-76-028, U. S. Environmental Protection Agency, Research Triangle Park, NC, September 1976.

36. *Estimating Air Toxics Emissions From Coal And Oil Combustion Sources*, EPA-450/2-89-001, U. S. Environmental Protection Agency, Research Triangle Park, NC, April 1989.

37. R. P. Hagebrauck, D. J. Von Lehmden, and J. E. Meeker, "Emissions of Polynuclear Hydrocarbons and Other Pollutants from Heat-Generation and Incineration Process", *J. Air Pollution Control Assoc.*, 14:267-278, 1964.

38. M. B. Rogozen, *et al.*, *Formaldehyde: A Survey Of Airborne Concentration And Sources*, California Air Resources Board, ARB Report No. ARB/R-84-231, 1984.

39. Seeker, W.R, *et al.*, *Municipal Waste Combustion Study: Combustion Control Of MSW Combustors To Minimize Emissions Of Trace Organics*, EPA-543-SW-87-021c, U. S. Environmental Protection Agency, Washington, D.C., May 1987.

40. *Clean Air Act Amendments of 1990*, Conference Report To Accompany S.1603, Report 101-952, U. S. Government Printing Office, Washington, DC, October 26, 1990.

41. K. J. Lim, *et al.*, *Industrial Boiler Combustion Modification NO_x Controls - Volume I Environmental Assessment*, EPA-600/7-81-126a, U. S. Environmental Protection Agency, July 1981.

42. D. H. Klein, *et al.*, "Pathways of Thirty-Seven Trace Elements Through Coal-Fired Power Plants," *Environ. Sci. Technol.*, 9:973-979, 1975.

43. D. G. Coles, *et al.*, "Chemical Studies of Stack Fly Ash From a Coal-Fired Power Plant," *Environ. Sci. Technol.*, 13:455-459, 1979.

44. S. Baig, *et al.*, *Conventional Combustion Environmental Assessment*, EPA Contract No. 68-02-3138, U. S. Environmental Protection Agency, Research Triangle Park, NC, 1981.

45. L. P. Nelson, *et al.*, *Global Combustion Sources of Nitrous Oxide Emissions*, Research Project 2333-4 Interim Report, Sacramento: Radian Corporation.

46. R. L. Peer, *et al.*, *Characterization of Nitrous Oxide Emission Sources*, Prepared for the U. S. EPA Contract 68-D1-0031, Research Triangle Park, NC: Radian Corporation, 1995.

47. S. D. Piccot, *et al.*, *Emissions and Cost Estimates for Globally Significant Anthropogenic Combustion Sources of NO_x, N_2O, CH_4, CO, and CO_2*, EPA Contract No. 68-02-4288, Research Triangle Park, NC: Radian Corporation, 1990.

48. G. Marland and R.M. Rotty, *Carbon Dioxide Emissions from Fossil Fuels: A Procedure For Estimation And Results For 1951-1981*, DOE/NBB-0036 TR-003, Carbon Dioxide Research Division, Office of Energy Research, U.S. Department of Energy, Oak Ridge, TN, 1983.

49. G. Marland and R.M. Rotty, *Carbon Dioxide Emissions from Fossil Fuels: A Procedure For Estimation And Results For 1950-1982*, *Tellus*, 36B: 232-261.

50. *Sector-Specific Issues and Reporting Methodologies Supporting the General Guidelines for the Voluntary Reporting of Greenhouse Gases under Section 1605(b) of the Energy Policy Act of 1992* (1994) DOE/PO-0028, Volume 2 of 3, U.S. Department of Energy.

51. G. R. Offen, *et al.*, *Control Of Particulate Matter From Oil Burners And Boilers*, EPA-450/3-76-005, U. S. Environmental Protection Agency, Research Triangle Park, NC, April 1976.

52. D. W. South, *et al.*, *Technologies And Other Measures For Controlling Emissions: Performance, Costs, And Applicability*, Acidic Deposition: State of Science and Technology, Volume IV, Report 25, National Acid Precipitation Assessment Program, U. S. Government Printing Office, Washington, DC, December 1990.

53. *EPA Industrial Boiler FGD Survey: First Quarter 1979*, EPA-600/7-79-067b, U. S. Environmental Protection Agency, April 1979.

54. J. H. Pohl and A.F. Sarofim, *Devolatilization And Oxidation Of Coal Nitrogen (Presented At The 16th International Symposium On Combustion)*, August 1976.

55. P. B. Nutcher, *High Technology Low NO_x Burner Systems For Fired Heaters And Steam Generators*, Process Combustion Corp., Pittsburgh, PA, Presented at the Pacific Coast Oil Show and Conference, Los Angeles, CA, November 1982.

56. *Environmental Assessment Of Coal And Oil Firing In A Controlled Industrial Boiler, Volume I*, PB 289942, U. S. Environmental Protection Agency, August 1978.

57. *Environmental Assessment Of Coal And Oil Firing In A Controlled Industrial Boiler, Volume II*, EPA-600/7-78-164b, U. S. Environmental Protection Agency, August 1978.

58. *Environmental Assessment Of Coal And Oil Firing In A Controlled Industrial Boiler, Volume III*, EPA-600/7-78-164c, U. S. Environmental Protection Agency, August 1978.

59. *Emission Reduction On Two Industrial Boilers With Major Combustion Modifications*, EPA-600/7-78-099a, U. S. Environmental Protection Agency, August 1978.

60. *Emission Reduction On Two Industrial Boilers With Major Combustion Modifications, Data Supplement*, EPA-600/7-78-099b, U. S. Environmental Protection Agency, August 1978.

61. *Residential Oil Furnace System Optimization, Phase II*, EPA-600/2-77-028, U. S. Environmental Protection Agency, January 1977.

62. *Characterization Of Particulate Emissions From Refinery Process Heaters And Boilers*, API Publication No. 4365, June 1983.

63. *Industrial Boilers Emission Test Report, Boston Edison Company, Everett, Massachusetts*, EMB Report 81-IBR-15, U. S. Environmental Protection Agency, Office of Air Quality Planning and Standards, October 1981.

64. Field Chemical Emissions Monitoring Project: Site 13 Emissions Monitoring, EPRI Project RP3177-1, Radian Corporation, Austin, Texas, February, 1993.

65. Field Chemical Emissions Monitoring Project, Site 112 Emissions Report, Preliminary Draft, Carnot, Tustin, California, February 24, 1994. (EPRI Report)

66. Field Chemical Emissions Monitoring Project: Emissions Report For sites 103 - 109, Preliminary Draft Report, Radian Corporation, Austin, Texas, March 1993. (EPRI Report)

67. Field Chemical Emissions Monitoring Project: Site 118 Emissions Report, Preliminary Draft, Carnot, Tustin, California, January 20, 1994. (EPRI Report)

68. Emissions Inventory Testing at Long Beach Auxiliary Boiler for Southern California Edison Company, Carnot, May 1990.

69. Emission Inventory Testing at Alamitos Unit 5 for Southern California Edison Company, Carnot, May 1990.

70. Air Toxic emissions Testing at Morro Bay Unit 3 for Pacific Gas and Electric Company, Carnot, May 1990.

71. Emission Inventory Testing at El Segundo Generating Station 1, for Southern California Edison Company, Carnot, April 1990.

72. Electric Utility Fuel Oil Fired Electric Utility Boiler Emission Report, for Long Island Lighting Corporation, Entropy Incorporated, April 1994.

73. Perry, Robert H. and Don Green (1984) *Perry's Chemical Engineers'Handbook*, Sixth ed., New York: McGraw Hill.

74. *Steam: Its Generation and Use*, Babcock and Wilcox, New York, 1975.

75. *Compilation of Air Pollutant Emission Factors, Volume I: Stationary Point and Area Sources* (1995) U.S. Environmental Protection Agency, AP-42. Fifth Edition. Research Triangle Park, NC.

1.4 Natural Gas Combustion

1.4.1 General[1-2]

Natural gas is one of the major combustion fuels used throughout the country. It is mainly used to generate industrial and utility electric power, produce industrial process steam and heat, and heat residential and commercial space. Natural gas consists of a high percentage of methane (generally above 85 percent) and varying amounts of ethane, propane, butane, and inerts (typically nitrogen, carbon dioxide, and helium). The average gross heating value of natural gas is approximately 1,020 British thermal units per standard cubic foot (Btu/scf), usually varying from 950 to 1,050 Btu/scf.

1.4.2 Firing Practices[3-5]

There are three major types of boilers used for natural gas combustion in commercial, industrial, and utility applications: watertube, firetube, and cast iron. Watertube boilers are designed to pass water through the inside of heat transfer tubes while the outside of the tubes is heated by direct contact with the hot combustion gases and through radiant heat transfer. The watertube design is the most common in utility and large industrial boilers. Watertube boilers are used for a variety of applications, ranging from providing large amounts of process steam, to providing hot water or steam for space heating, to generating high-temperature, high-pressure steam for producing electricity. Furthermore, watertube boilers can be distinguished either as field erected units or packaged units.

Field erected boilers are boilers that are constructed on site and comprise the larger sized watertube boilers. Generally, boilers with heat input levels greater than 100 MMBtu/hr, are field erected. Field erected units usually have multiple burners and, given the customized nature of their construction, also have greater operational flexibility and NO_x control options. Field erected units can also be further categorized as wall-fired or tangential-fired. Wall-fired units are characterized by multiple individual burners located on a single wall or on opposing walls of the furnace while tangential units have several rows of air and fuel nozzles located in each of the four corners of the boiler.

Package units are constructed off-site and shipped to the location where they are needed. While the heat input levels of packaged units may range up to 250 MMBtu/hr, the physical size of these units are constrained by shipping considerations and generally have heat input levels less than 100 MMBtu/hr. Packaged units are always wall-fired units with one or more individual burners. Given the size limitations imposed on packaged boilers, they have limited operational flexibility and cannot feasibly incorporate some NO_x control options.

Firetube boilers are designed such that the hot combustion gases flow through tubes, which heat the water circulating outside of the tubes. These boilers are used primarily for space heating systems, industrial process steam, and portable power boilers. Firetube boilers are almost exclusively packaged units. The two major types of firetube units are Scotch Marine boilers and the older firebox boilers. In cast iron boilers, as in firetube boilers, the hot gases are contained inside the tubes and the water being heated circulates outside the tubes. However, the units are constructed of cast iron rather than steel. Virtually all cast iron boilers are constructed as package boilers. These boilers are used to produce either low-pressure steam or hot water, and are most commonly used in small commercial applications.

Natural gas is also combusted in residential boilers and furnaces. Residential boilers and furnaces generally resemble firetube boilers with flue gas traveling through several channels or tubes with water or air circulated outside the channels or tubes.

1.4.3 Emissions[3-4]

The emissions from natural gas-fired boilers and furnaces include nitrogen oxides (NO_x), carbon monoxide (CO), and carbon dioxide (CO_2), methane (CH_4), nitrous oxide (N_2O), volatile organic compounds (VOCs), trace amounts of sulfur dioxide (SO_2), and particulate matter (PM).

Nitrogen Oxides -

Nitrogen oxides formation occurs by three fundamentally different mechanisms. The principal mechanism of NO_x formation in natural gas combustion is thermal NO_x. The thermal NO_x mechanism occurs through the thermal dissociation and subsequent reaction of nitrogen (N_2) and oxygen (O_2) molecules in the combustion air. Most NO_x formed through the thermal NO_x mechanism occurs in the high temperature flame zone near the burners. The formation of thermal NO_x is affected by three furnace-zone factors: (1) oxygen concentration, (2) peak temperature, and (3) time of exposure at peak temperature. As these three factors increase, NO_x emission levels increase. The emission trends due to changes in these factors are fairly consistent for all types of natural gas-fired boilers and furnaces. Emission levels vary considerably with the type and size of combustor and with operating conditions (e.g., combustion air temperature, volumetric heat release rate, load, and excess oxygen level).

The second mechanism of NO_x formation, called prompt NO_x, occurs through early reactions of nitrogen molecules in the combustion air and hydrocarbon radicals from the fuel. Prompt NO_x reactions occur within the flame and are usually negligible when compared to the amount of NO_x formed through the thermal NO_x mechanism. However, prompt NO_x levels may become significant with ultra-low-NO_x burners.

The third mechanism of NO_x formation, called fuel NO_x, stems from the evolution and reaction of fuel-bound nitrogen compounds with oxygen. Due to the characteristically low fuel nitrogen content of natural gas, NO_x formation through the fuel NO_x mechanism is insignificant.

Carbon Monoxide -

The rate of CO emissions from boilers depends on the efficiency of natural gas combustion. Improperly tuned boilers and boilers operating at off-design levels decrease combustion efficiency resulting in increased CO emissions. In some cases, the addition of NO_x control systems such as low NO_x burners and flue gas recirculation (FGR) may also reduce combustion efficiency, resulting in higher CO emissions relative to uncontrolled boilers.

Volatile Organic Compounds -

The rate of VOC emissions from boilers and furnaces also depends on combustion efficiency. VOC emissions are minimized by combustion practices that promote high combustion temperatures, long residence times at those temperatures, and turbulent mixing of fuel and combustion air. Trace amounts of VOC species in the natural gas fuel (e.g., formaldehyde and benzene) may also contribute to VOC emissions if they are not completely combusted in the boiler.

Sulfur Oxides -

Emissions of SO_2 from natural gas-fired boilers are low because pipeline quality natural gas typically has sulfur levels of 2,000 grains per million cubic feet. However, sulfur-containing odorants are added to natural gas for detecting leaks, leading to small amounts of SO_2 emissions. Boilers combusting unprocessed natural gas may have higher SO_2 emissions due to higher levels of sulfur in the natural gas. For these units, a sulfur mass balance should be used to determine SO_2 emissions.

Particulate Matter -

Because natural gas is a gaseous fuel, filterable PM emissions are typically low. Particulate matter from natural gas combustion has been estimated to be less than 1 micrometer in size and has filterable and condensable fractions. Particulate matter in natural gas combustion are usually larger molecular weight hydrocarbons that are not fully combusted. Increased PM emissions may result from poor air/fuel mixing or maintenance problems.

Greenhouse Gases -[6-11]

CO_2, CH_4, and N_2O emissions are all produced during natural gas combustion. In properly tuned boilers, nearly all of the fuel carbon (99.9 percent) in natural gas is converted to CO_2 during the combustion process. This conversion is relatively independent of boiler or combustor type. Fuel carbon not converted to CO_2 results in CH_4, CO, and/or VOC emissions and is due to incomplete combustion. Even in boilers operating with poor combustion efficiency, the amount of CH_4, CO, and VOC produced is insignificant compared to CO_2 levels.

Formation of N_2O during the combustion process is affected by two furnace-zone factors. N_2O emissions are minimized when combustion temperatures are kept high (above 1475°F) and excess oxygen is kept to a minimum (less than 1 percent).

Methane emissions are highest during low-temperature combustion or incomplete combustion, such as the start-up or shut-down cycle for boilers. Typically, conditions that favor formation of N_2O also favor emissions of methane.

1.4.4 Controls[4,12]

NO_x Controls -

Currently, the two most prevalent combustion control techniques used to reduce NO_x emissions from natural gas-fired boilers are flue gas recirculation (FGR) and low NO_x burners. In an FGR system, a portion of the flue gas is recycled from the stack to the burner windbox. Upon entering the windbox, the recirculated gas is mixed with combustion air prior to being fed to the burner. The recycled flue gas consists of combustion products which act as inerts during combustion of the fuel/air mixture. The FGR system reduces NO_x emissions by two mechanisms. Primarily, the recirculated gas acts as a dilutent to reduce combustion temperatures, thus suppressing the thermal NO_x mechanism. To a lesser extent, FGR also reduces NO_x formation by lowering the oxygen concentration in the primary flame zone. The amount of recirculated flue gas is a key operating parameter influencing NO_x emission rates for these systems. An FGR system is normally used in combination with specially designed low NO_x burners capable of sustaining a stable flame with the increased inert gas flow resulting from the use of FGR. When low NO_x burners and FGR are used in combination, these techniques are capable of reducing NO_x emissions by 60 to 90 percent.

Low NO_x burners reduce NO_x by accomplishing the combustion process in stages. Staging partially delays the combustion process, resulting in a cooler flame which suppresses thermal NO_x formation. The two most common types of low NO_x burners being applied to natural gas-fired boilers are staged air burners and staged fuel burners. NO_x emission reductions of 40 to 85 percent (relative to uncontrolled emission levels) have been observed with low NO_x burners.

Other combustion control techniques used to reduce NO_x emissions include staged combustion and gas reburning. In staged combustion (e.g., burners-out-of-service and overfire air), the degree of staging is a key operating parameter influencing NO_x emission rates. Gas reburning is similar to the use of overfire

in the use of combustion staging. However, gas reburning injects additional amounts of natural gas in the upper furnace, just before the overfire air ports, to provide increased reduction of NO_x to NO_2.

Two postcombustion technologies that may be applied to natural gas-fired boilers to reduce NO_x emissions are selective noncatalytic reduction (SNCR) and selective catalytic reduction (SCR). The SNCR system injects ammonia (NH_3) or urea into combustion flue gases (in a specific temperature zone) to reduce NO_x emission. The Alternative Control Techniques (ACT) document for NO_x emissions from utility boilers, maximum SNCR performance was estimated to range from 25 to 40 percent for natural gas-fired boilers.[14] Performance data available from several natural gas fired utility boilers with SNCR show a 24 percent reduction in NO_x for applications on wall-fired boilers and a 13 percent reduction in NO_x for applications on tangential-fired boilers.[13] In many situations, a boiler may have an SNCR system installed to trim NO_x emissions to meet permitted levels. In these cases, the SNCR system may not be operated to achieve maximum NO_x reduction. The SCR system involves injecting NH_3 into the flue gas in the presence of a catalyst to reduce NO_x emissions. No data were available on SCR performance on natural gas fired boilers at the time of this publication. However, the ACT Document for utility boilers estimates NO_x reduction efficiencies for SCR control ranging from 80 to 90 percent.[14]

Emission factors for natural gas combustion in boilers and furnaces are presented in Tables 1.4-1, 1.4-2, 1.4-3, and 1.4-4.[13] Tables in this section present emission factors on a volume basis (lb/10^6 scf). To convert to an energy basis (lb/MMBtu), divide by a heating value of 1,020 MMBtu/10^6 scf. For the purposes of developing emission factors, natural gas combustors have been organized into three general categories: large wall-fired boilers with greater than 100 MMBtu/hr of heat input, boilers and residential furnaces with less than 100 MMBtu/hr of heat input, and tangential-fired boilers. Boilers within these categories share the same general design and operating characteristics and hence have similar emission characteristics when combusting natural gas.

Emission factors are rated from A to E to provide the user with an indication of how "good" the factor is, with "A" being excellent and "E" being poor. The criteria that are used to determine a rating for an emission factor can be found in the Emission Factor Documentation for AP-42 Section 1.4 and in the introduction to the AP-42 document.

1.4.5 Updates Since the Fifth Edition

The Fifth Edition was released in January 1995. Revisions to this section are summarized below. For further detail, consult the Emission Factor Documentation for this section. These and other documents can be found on the Emission Factor and Inventory Group (EFIG) home page (http://www.epa.gov/oar/oaqps/efig).

Supplement D, 1998

- Text was revised concerning Firing Practices, Emissions, and Controls.
- All emission factors were updated based on 482 data points taken from 151 source tests. Many new emission factors have been added for speciated organic compounds, including hazardous air pollutants.

Table 1.4-1. EMISSION FACTORS FOR NITROGEN OXIDES (NO_x) AND CARBON MONOXIDE (CO) FROM NATURAL GAS COMBUSTION[a]

Combustor Type (MMBtu/hr Heat Input) [SCC]	NO_x[b]		CO	
	Emission Factor ($lb/10^6$ scf)	Emission Factor Rating	Emission Factor ($lb/10^6$ scf)	Emission Factor Rating
Large Wall-Fired Boilers (>100) [1-01-006-01, 1-02-006-01, 1-03-006-01]				
Uncontrolled (Pre-NSPS)[c]	280	A	84	B
Uncontrolled (Post-NSPS)[c]	190	A	84	B
Controlled - Low NO_x burners	140	A	84	B
Controlled - Flue gas recirculation	100	D	84	B
Small Boilers (<100) [1-01-006-02, 1-02-006-02, 1-03-006-02, 1-03-006-03]				
Uncontrolled	100	B	84	B
Controlled - Low NO_x burners	50	D	84	B
Controlled - Low NO_x burners/Flue gas recirculation	32	C	84	B
Tangential-Fired Boilers (All Sizes) [1-01-006-04]				
Uncontrolled	170	A	24	C
Controlled - Flue gas recirculation	76	D	98	D
Residential Furnaces (<0.3) [No SCC]				
Uncontrolled	94	B	40	B

[a] Reference 13. Units are in pounds of pollutant per million standard cubic feet of natural gas fired. To convert from $lb/10^6$ scf to $kg/10^6$ m^3, multiply by 16. Emission factors are based on an average natural gas higher heating value of 1,020 Btu/scf. To convert from $lb/10^6$ scf to lb/MMBtu, divide by 1,020. The emission factors in this table may be converted to other natural gas heating values by multiplying the given emission factor by the ratio of the specified heating value to this average heating value. SCC = Source Classification Code. ND = no data. NA = not applicable.

[b] Expressed as NO_2. For large and small wall fired boilers with SNCR control, apply a 24 percent reduction to the appropriate NO_x emission factor. For tangential-fired boilers with SNCR control, apply a 13 percent reduction to the appropriate NO_x emission factor.

[c] NSPS=New Source Performance Standard as defined in 40 CFR 60 Subparts D and Db. Post-NSPS units are boilers with greater than 250 MMBtu/hr of heat input that commenced construction modification, or reconstruction after August 17, 1971, and units with heat input capacities between 100 and 250 MMBtu/hr that commenced construction modification, or reconstruction after June 19, 1984.

TABLE 1.4-2. EMISSION FACTORS FOR CRITERIA POLLUTANTS AND GREENHOUSE GASES FROM NATURAL GAS COMBUSTION[a]

Pollutant	Emission Factor ($lb/10^6$ scf)	Emission Factor Rating
CO_2[b]	120,000	A
Lead	0.0005	D
N_2O (Uncontrolled)	2.2	E
N_2O (Controlled-low-NO_X burner)	0.64	E
PM (Total)[c]	7.6	D
PM (Condensable)[c]	5.7	D
PM (Filterable)[c]	1.9	B
SO_2[d]	0.6	A
TOC	11	B
Methane	2.3	B
VOC	5.5	C

[a] Reference 13. Units are in pounds of pollutant per million standard cubic feet of natural gas fired. Data are for all natural gas combustion sources. To convert from $lb/10^6$ scf to $kg/10^6$ m^3, multiply by 16. To convert from $lb/10^6$ scf to 1b/MMBtu, divide by 1,020. The emission factors in this table may be converted to other natural gas heating values by multiplying the given emission factor by the ratio of the specified heating value to this average heating value. TOC = Total Organic Compounds. VOC = Volatile Organic Compounds.

[b] Based on approximately 100% conversion of fuel carbon to CO_2. $CO_2[lb/10^6 \text{ scf}] = (3.67)(CON)(C)(D)$, where CON = fractional conversion of fuel carbon to CO_2, C = carbon content of fuel by weight (0.76), and D = density of fuel, 4.2×10^4 $lb/10^6$ scf.

[c] All PM (total, condensible, and filterable) is assumed to be less than 1.0 micrometer in diameter. Therefore, the PM emission factors presented here may be used to estimate PM_{10}, $PM_{2.5}$ or PM_1 emissions. Total PM is the sum of the filterable PM and condensible PM. Condensible PM is the particulate matter collected using EPA Method 202 (or equivalent). Filterable PM is the particulate matter collected on, or prior to, the filter of an EPA Method 5 (or equivalent) sampling train.

[d] Based on 100% conversion of fuel sulfur to SO_2. Assumes sulfur content is natural gas of 2,000 grains/10^6 scf. The SO_2 emission factor in this table can be converted to other natural gas sulfur contents by multiplying the SO_2 emission factor by the ratio of the site-specific sulfur content (grains/10^6 scf) to 2,000 grains/10^6 scf.

TABLE 1.4-3. EMISSION FACTORS FOR SPECIATED ORGANIC COMPOUNDS FROM NATURAL GAS COMBUSTION[a]

CAS No.	Pollutant	Emission Factor ($lb/10^6$ scf)	Emission Factor Rating
91-57-6	2-Methylnaphthalene[b, c]	2.4E-05	D
56-49-5	3-Methylchloranthrene[b, c]	<1.8E-06	E
	7,12-Dimethylbenz(a)anthracene[b,c]	<1.6E-05	E
83-32-9	Acenaphthene[b,c]	<1.8E-06	E
203-96-8	Acenaphthylene[b,c]	<1.8E-06	E
120-12-7	Anthracene[b,c]	<2.4E-06	E
56-55-3	Benz(a)anthracene[b,c]	<1.8E-06	E
71-43-2	Benzene[b]	2.1E-03	B
50-32-8	Benzo(a)pyrene[b,c]	<1.2E-06	E
205-99-2	Benzo(b)fluoranthene[b,c]	<1.8E-06	E
191-24-2	Benzo(g,h,i)perylene[b,c]	<1.2E-06	E
205-82-3	Benzo(k)fluoranthene[b,c]	<1.8E-06	E
106-97-8	Butane	2.1E+00	E
218-01-9	Chrysene[b,c]	<1.8E-06	E
53-70-3	Dibenzo(a,h)anthracene[b,c]	<1.2E-06	E
25321-22-6	Dichlorobenzene[b]	1.2E-03	E
74-84-0	Ethane	3.1E+00	E
206-44-0	Fluoranthene[b,c]	3.0E-06	E
86-73-7	Fluorene[b,c]	2.8E-06	E
50-00-0	Formaldehyde[b]	7.5E-02	B
110-54-3	Hexane[b]	1.8E+00	E
193-39-5	Indeno(1,2,3-cd)pyrene[b,c]	<1.8E-06	E
91-20-3	Naphthalene[b]	6.1E-04	E
109-66-0	Pentane	2.6E+00	E
85-01-8	Phenanathrene[b,c]	1.7E-05	D

TABLE 1.4-3. EMISSION FACTORS FOR SPECIATED ORGANIC COMPOUNDS FROM NATURAL GAS COMBUSTION (Continued)

CAS No.	Pollutant	Emission Factor ($lb/10^6$ scf)	Emission Factor Rating
74-98-6	Propane	1.6E+00	E
129-00-0	Pyrene[b, c]	5.0E-06	E
108-88-3	Toluene[b]	3.4E-03	C

[a] Reference 13. Units are in pounds of pollutant per million standard cubic feet of natural gas fired. Data are for all natural gas combustion sources. To convert from $lb/10^6$ scf to $kg/10^6$ m^3, multiply by 16. To convert from $1b/10^6$ scf to lb/MMBtu, divide by 1,020. Emission Factors preceeded with a less-than symbol are based on method detection limits.

[b] Hazardous Air Pollutant (HAP) as defined by Section 112(b) of the Clean Air Act.

[c] HAP because it is Polycyclic Organic Matter (POM). POM is a HAP as defined by Section 112(b) of the Clean Air Act.

TABLE 1.4-4. EMISSION FACTORS FOR METALS FROM NATURAL GAS COMBUSTION[a]

CAS No.	Pollutant	Emission Factor ($lb/10^6$ scf)	Emission Factor Rating
7440-38-2	Arsenic[b]	2.0E-04	E
7440-39-3	Barium	4.4E-03	D
7440-41-7	Beryllium[b]	<1.2E-05	E
7440-43-9	Cadmium[b]	1.1E-03	D
7440-47-3	Chromium[b]	1.4E-03	D
7440-48-4	Cobalt[b]	8.4E-05	D
7440-50-8	Copper	8.5E-04	C
7439-96-5	Manganese[b]	3.8E-04	D
7439-97-6	Mercury[b]	2.6E-04	D
7439-98-7	Molybdenum	1.1E-03	D
7440-02-0	Nickel[b]	2.1E-03	C
7782-49-2	Selenium[b]	<2.4E-05	E
7440-62-2	Vanadium	2.3E-03	D
7440-66-6	Zinc	2.9E-02	E

[a] Reference 13. Units are in pounds of pollutant per million standard cubic feet of natural gas fired. Data are for all natural gas combustion sources. Emission factors preceeded by a less-than symbol are based on method detection limits. To convert from $lb/10^6$ scf to $kg/10^6$ m^3, multiply by 16. To convert from $lb/10^6$ scf to lb/MMBtu, divide by 1,020.

[b] Hazardous Air Pollutant as defined by Section 112(b) of the Clean Air Act.

References For Section 1.4

1. *Exhaust Gases From Combustion And Industrial Processes*, EPA Contract No. EHSD 71-36, Engineering Science, Inc., Washington, DC, October 1971.

2. *Chemical Engineers' Handbook, Fourth Edition*, J. H. Perry, Editor, McGraw-Hill Book Company, New York, NY, 1963.

3. *Background Information Document For Industrial Boilers*, EPA-450/3-82-006a, U. S. Environmental Protection Agency, Research Triangle Park, NC, March 1982.

4. *Background Information Document For Small Steam Generating Units*, EPA-450/3-87-000, U. S. Environmental Protection Agency, Research Triangle Park, NC, 1987.

5. J. L. Muhlbaier, "Particulate and Gaseous Emissions From Natural Gas Furnaces and Water Heaters", *Journal Of The Air Pollution Control Association*, December 1981.

6. L. P. Nelson, *et al.*, *Global Combustion Sources Of Nitrous Oxide Emissions*, Research Project 2333-4 Interim Report, Sacramento: Radian Corporation, 1991.

7. R. L. Peer, *et al.*, *Characterization Of Nitrous Oxide Emission Sources*, Prepared for the U. S. EPA Contract 68-D1-0031, Research Triangle Park, NC: Radian Corporation, 1995.

8. S. D. Piccot, *et al.*, *Emissions and Cost Estimates For Globally Significant Anthropogenic Combustion Sources Of NO_x, N_2O, CH_4, CO, and CO_2*, EPA Contract No. 68-02-4288, Research Triangle Park, NC: Radian Corporation, 1990.

9. *Sector-Specific Issues and Reporting Methodologies Supporting the General Guidelines for the Voluntary Reporting of Greenhouse Gases under Section 1605(b) of the Energy Policy Act of 1992* (1994) DOE/PO-0028, Volume 2 of 3, U.S. Department of Energy.

10. J. P. Kesselring and W. V. Krill, "A Low-NQ Burner For Gas-Fired Firetube Boilers", *Proceedings: 1985 Symposium On Stationary Combustion NO_x Control, Volume 2*, EPRI CS-4360, Electric Power Research Institute, Palo Alto, CA, January 1986.

11. *Emission Factor Documentation for AP-42 Section 1.4— Natural Gas Combustion*, Technical Support Division, Office of Air Quality Planning and Standards, U. S. Environmental Protection Agency, Research Triangle Park, NC, 1997.

12. *Alternate Control Techniques Document - NO_x Emissions from Utility Boilers*, EPA-453/R-94-023, U. S. Environmental Protection Agency, Research Triangle Park, NC, March 1994.

1.5 Liquefied Petroleum Gas Combustion

1.5.1 General[1]

Liquefied petroleum gas (LPG or LP-gas) consists of propane, propylene, butane, and butylenes; the product used for domestic heating is composed primarily of propane. This gas, obtained mostly from gas wells (but also, to a lesser extent, as a refinery by-product) is stored as a liquid under moderate pressures. There are three grades of LPG available as heating fuels: commercial-grade propane, engine fuel-grade propane (also known as HD-5 propane), and commercial-grade butane. In addition, there are high-purity grades of LPG available for laboratory work and for use as aerosol propellants. Specifications for the various LPG grades are available from the American Society for Testing and Materials and the Gas Processors Association. A typical heating value for commercial-grade propane and HD-5 propane is 90,500 British thermal units per gallon (Btu/gal), after vaporization; for commercial-grade butane, the value is 97,400 Btu/gal.

The largest market for LPG is the domestic/commercial market, followed by the chemical industry (where it is used as a petrochemical feedstock) and the agriculture industry. Propane is also used as an engine fuel as an alternative to gasoline and as a standby fuel for facilities that have interruptible natural gas service contracts.

1.5.2 Firing Practices[2]

The combustion processes that use LPG are very similar to those that use natural gas. Use of LPG in commercial and industrial applications may require a vaporizer to provide the burner with the proper mix of air and fuel. The burner itself will usually have different fuel injector tips as well as different fuel-to-air ratio controller settings than a natural gas burner since the LPG stoichiometric requirements are different than natural gas requirements. LPG is fired as a primary and backup fuel in small commercial and industrial boilers and space heating equipment and can be used to generate heat and process steam for industrial facilities and in most domestic appliances that typically use natural gas.

1.5.3 Emissions[1,3-5]

1.5.3.1 Criteria Pollutants -

LPG is considered a "clean" fuel because it does not produce visible emissions. However, gaseous pollutants such as nitrogen oxides (NO_x), carbon monoxide (CO), and organic compounds are produced as are small amounts of sulfur dioxide (SO_2) and particulate matter (PM). The most significant factors affecting NO_x, CO, and organic emissions are burner design, burner adjustment, boiler operating parameters, and flue gas venting. Improper design, blocking and clogging of the flue vent, and insufficient combustion air result in improper combustion and the emission of aldehydes, CO, hydrocarbons, and other organics. NO_x emissions are a function of a number of variables, including temperature, excess air, fuel and air mixing, and residence time in the combustion zone. The amount of SO_2 emitted is directly proportional to the amount of sulfur in the fuel. PM emissions are very low and result from soot, aerosols formed by condensable emitted species, or boiler scale dislodged during combustion. Emission factors for LPG combustion are presented in Table 1.5-1.

Table 1.5-1 presents emission factors on a volume basis (lb/10^3gal). To convert to an energy basis (lb/MMBtu), divide by a heating value of 91.5 MMBtu/10^3gal for propane and 102 MMBtu/10^3gal for butane.

1.5.3.2 Greenhouse Gases[6-11] -

Carbon dioxide (CO_2), methane (CH_4), and nitrous oxide (N_2O) emissions are all produced during LPG combustion. Nearly all of the fuel carbon (99.5 percent) in LPG is converted to CO_2 during the combustion process. This conversion is relatively independent of firing configuration. Although the formation of CO acts to reduce CO_2 emissions, the amount of CO produced is insignificant compared to the amount of CO_2 produced. The majority of the 0.5 percent of fuel carbon not converted to CO_2 is due to incomplete combustion in the fuel stream.

Formation of N_2O during the combustion process is governed by a complex series of reactions and its formation is dependent upon many factors. Formation of N_2O is minimized when combustion temperatures are kept high (above 1475°F) and excess air is kept to a minimum (less than 1 percent).

Methane emissions are highest during periods of low-temperature combustion or incomplete combustion, such as the start-up or shut-down cycle for boilers. Typically, conditions that favor formation of N_2O also favor emissions of CH_4.

1.5.4 Controls

The only controls developed for LPG combustion are to reduce NO_x emissions. NO_x controls have been developed for firetube and watertube boilers firing propane or butane. Vendors are now guaranteeing retrofit systems to levels as low as 30 to 40 ppm (based on 3 percent oxygen). These systems use a combination of low-NO_x burners and flue gas recirculation (FGR). Some burner vendors use water or steam injection into the flame zone for NO_x reduction. This is a trimming technique which may be necessary during backup fuel periods because LPG typically has a higher NO_x-forming potential than natural gas; conventional natural gas emission control systems may not be sufficient to reduce LPG emissions to mandated levels. Also, LPG burners are more prone to sooting under the modified combustion conditions required for low NO_x emissions. The extent of allowable combustion modifications for LPG may be more limited than for natural gas.

One NO_x control system that has been demonstrated on small commercial boilers is FGR. NO_x emissions from propane combustion can be reduced by as much as 50 percent by recirculating about 16 percent of the flue gas. NO_x emission reductions of over 60 percent have been achieved with FGR and low-NO_x burners used in combination.

1.5.5 Updates Since the Fifth Edition

The Fifth Edition was released in January 1995. Revisions to this section since that date are summarized below. For further detail, consult the memoranda describing each supplement or the background report for this section. These and other documents can be found on the CHIEF electronic bulletin board (919-541-5742), or on the new EFIG home page (http://www.epa.gov/oar/oaqps/efig/).

Supplement A, February 1996

No changes.

Supplement B, October 1996

- Text was added concerning firing practices.
- The CO_2 emission factor was updated.
- Emission factors were added for N_2O and CH_4.

Table 1.5-1. EMISSION FACTORS FOR LPG COMBUSTION[a]

EMISSION FACTOR RATING: E

Pollutant	Butane Emission Factor ($lb/10^3$ gal)		Propane Emission Factor ($lb/10^3$ gal)	
	Industrial Boilers[b] (SCC 1-02-010-01)	Commercial Boilers[c] (SCC 1-03-010-01)	Industrial Boilers[b] (SCC 1-02-010-02)	Commercial Boilers[c] (SCC 1-03-010-02)
PM[d]	0.6	0.5	0.6	0.4
SO_2[e]	0.09S	0.09S	0.10S	0.10S
NO_x[f]	21	15	19	14
N_2O[g]	0.9	0.9	0.9	0.9
CO_2[h,j]	14,300	14,300	12,500	12,500
CO	3.6	2 1	3.2	1.9
TOC	0.6	0.6	0.5	0.5
CH_4[k]	0 2	0.2	0.2	0.2

[a] Assumes emissions (except SO_x and NO_x) are the same, on a heat input basis, as for natural gas combustion. The NO_x emission factors have been multiplied by a correction factor of 1.5, which is the approximate ratio of propane/butane NO_x emissions to natural gas NO_x emissions. To convert from $lb/10^3$ gal to $kg/10^3$ L, multiply by 0.12. SCC = Source Classification Code.

[b] Heat input capacities generally between 10 and 100 million Btu/hour.

[c] Heat input capacities generally between 0.3 and 10 million Btu/hour.

[d] Filterable particulate matter (PM) is that PM collected on or prior to the filter of an EPA Method 5 (or equivalent) sampling train. For natural gas, a fuel with similar combustion characteristics, all PM is less than 10 μm in aerodynamic equivalent diameter (PM-10).

[e] S equals the sulfur content expressed in $gr/100\ ft^3$ gas vapor. For example, if the butane sulfur content is $0.18\ gr/100\ ft^3$, the emission factor would be (0.09 x 0.18) = 0.016 lb of $SO_2/10^3$ gal butane burned.

[f] Expressed as NO_2.

[g] Reference 12.

[h] Assuming 99.5% conversion of fuel carbon to CO_2.

[j] EMISSION FACTOR RATING = C.

[k] Reference 13.

References For Section 1.5

1. Written Communication from W. Butterbaugh of the National Propane Gas Association, Lisle, Illinois, to J. McSorley of the U. S. Environmental Protection Agency, Research Triangle Park, NC, August 19, 1992.

2. Emission Factor Documentation for AP-42 Section 1.5. *Liquefied Petroleum Gas Combustion.* April 1993.

3. *Air Pollutant Emission Factors*, Final Report, Contract No. CPA-22-69-119, Resources Research, Inc., Reston, VA, Durham, NC, April 1970.

4. *Nitrous Oxide Reduction With The Weishaupt Flue Gas Recirculation System*, Weishaupt Research and Development Institute, January 1987.

5. Phone communication memorandum of conversation between B. Lusher of Acurex Environmental and D. Childress of Suburban/Petrolane, Durham, NC, May 14, 1992.

6. L. P. Nelson, *et al.*, *Global Combustion Sources Of Nitrous Oxide Emissions*, Research Project 2333-4 Interim Report, Radian Corporation, Sacramento, CA, 1991.

7. R. L. Peer, *et al.*, *Characterization Of Nitrous Oxide Emission Sources*, EPA Contract No. 68-D1-0031, Research Triangle Park, NC, 1995.

8. S. D. Piccot, *et al.*, *Emissions And Cost Estimates For Globally Significant Anthropogenic Combustion Sources Of* NO_x, N_2O, CH_4, *CO, And* CO_2, EPA Contract No. 68-02-4288, Research Triangle Park, NC, 1990.

9. G. Marland and R. M. Rotty, *Carbon Dioxide Emissions From Fossil Fuels: A Procedure For Estimation And Results For 1951-1981*, DOE/NBB-0036 TR-003, Carbon Dioxide Research Division, Office of Energy Research, U.S. Department of Energy, Oak Ridge, TN, 1983.

10. G. Marland and R.M. Rotty, *Carbon Dioxide Emissions From Fossil Fuels: A Procedure For Estimation And Results For 1950-1982*, *Tellus*, 36B: 232-261.

11. *Sector-Specific Issues And Reporting Methodologies Supporting The General Guidelines For The Voluntary Reporting Of Greenhouse Gases Under Section 1605(b) Of The Energy Policy Act Of 1992*, Volume 2 of 3, DOE/PO-0028, U.S. Department of Energy, 1994.

12. A. Rosland, *Greenhouse Gas Emissions In Norway: Inventories And Estimation Methods*, Ministry of Environment, Oslo, Norway, 1993.

13. *Inventory Methods Manual For Estimating Canadian Emissions Of Greenhouse Gases*, Prepared for Environment Canada by Ortech Corporation, 1994.

1.6 Wood Waste Combustion In Boilers

1.6.1 General[1-5]

The burning of wood waste in boilers is mostly confined to those industries where it is available as a byproduct. It is burned both to obtain heat energy and to alleviate possible solid waste disposal problems. In boilers, wood waste is normally burned in the form of hogged wood, bark, sawdust, shavings, chips, mill rejects, sanderdust, or wood trim. Heating values for this waste range from about 4,000 to 5,000 British thermal units/pound (Btu/lb) of fuel on a wet, as-fired basis. The moisture content of as-fired wood is typically near 50 weight percent, but may vary from 5 to 75 weight percent depending on the waste type and storage operations.

Generally, bark is the major type of waste burned in pulp mills; either a mixture of wood and bark waste or wood waste alone is burned most frequently in the lumber, furniture, and plywood industries. As of 1980, there were approximately 1,600 wood-fired boilers operating in the U. S., with a total capacity of over 1.0×10^{11} Btu/hour.

1.6.2 Firing Practices[5-7]

Various boiler firing configurations are used for burning wood waste. One common type of boiler used in smaller operations is the Dutch oven. This unit is widely used because it can burn fuels with very high moisture content. Fuel is fed into the oven through an opening in the top of a refractory-lined furnace. The fuel accumulates in a cone-shaped pile on a flat or sloping grate. Combustion is accomplished in two stages: (1) drying and gasification, and (2) combustion of gaseous products. The first stage takes place in the primary furnace, which is separated from the secondary furnace chamber by a bridge wall. Combustion is completed in the secondary chamber before gases enter the boiler section. The large mass of refractory helps to stabilize combustion rates but also causes a slow response to fluctuating steam demand.

In another boiler type, the fuel cell oven, fuel is dropped onto suspended fixed grates and is fired in a pile. Unlike the Dutch oven, the refractory-lined fuel cell also uses combustion air preheating and positioning of secondary and tertiary air injection ports to improve boiler efficiency. Because of their overall design and operating similarities, however, fuel cell and Dutch oven boilers have comparable emission characteristics.

The firing method most commonly employed for wood-fired boilers with a steam generation rate larger than 100,000 lb/hr is the spreader stoker. In this boiler type, wood enters the furnace through a fuel chute and is spread either pneumatically or mechanically across the furnace, where small pieces of the fuel burn while in suspension. Simultaneously, larger pieces of fuel are spread in a thin, even bed on a stationary or moving grate. The burning is accomplished in three stages in a single chamber: (1) moisture evaporation; (2) distillation and burning of volatile matter; and (3) burning of fixed carbon. This type of boiler has a fast response to load changes, has improved combustion control, and can be operated with multiple fuels. Natural gas, oil, and/or coal, are often fired in spreader stoker boilers as auxiliary fuels. The fossil fuels are fired to maintain constant steam when the wood waste moisture content or mass rate fluctuates and/or to provide more steam than can be generated from the waste supply alone. Although spreader stokers are the most common stokers among larger wood-fired boilers, overfeed and underfeed stokers are also utilized for smaller units.

Another boiler type sometimes used for wood combustion is the suspension-fired boiler. This boiler differs from a spreader stoker in that small-sized fuel (normally less than 2 mm) is blown into the boiler and combusted by supporting it in air rather than on fixed grates. Rapid changes in combustion rate and, therefore, steam generation rate are possible because the finely divided fuel particles burn very quickly.

A recent innovation in wood firing is the fluidized bed combustion (FBC) boiler. A fluidized bed consists of inert particles through which air is blown so that the bed behaves as a fluid. Wood waste enters in the space above the bed and burns both in suspension and in the bed. Because of the large thermal mass represented by the hot inert bed particles, fluidized beds can handle fuels with moisture contents up to near 70 percent (total basis). Fluidized beds can also handle dirty fuels (up to 30 percent inert material). Wood fuel is pyrolyzed faster in a fluidized bed than on a grate due to its immediate contact with hot bed material. As a result, combustion is rapid and results in nearly complete combustion of the organic matter, thereby minimizing the emissions of unburned organic compounds.

1.6.3 Emissions And Controls[6-11]

The major emission of concern from wood boilers is particulate matter (PM), although other pollutants, particularly carbon monoxide (CO), volatile organic compounds (VOC), and oxides of nitrogen (NO_x) may be emitted in significant quantities when certain types of wood waste are combusted or when operating conditions are poor. These emissions depend on a number of variables, including (1) the composition of the waste fuel burned, (2) furnace design and operating conditions, and (3) the degree of flyash reinjection employed.

1.6.3.1 Criteria Pollutants

The composition of wood waste and the characteristics of the resulting emissions depend largely on the industry from which the wood waste originates. Pulping operations, for example, produce great quantities of bark that may contain more than 70 weight percent moisture, sand, and other non-combustibles. As a result, bark boilers in pulp mills may emit considerable amounts of particulate matter to the atmosphere unless they are controlled. On the other hand, some operations, such as furniture manufacturing, generate a clean, dry wood waste (2 to 20 weight percent moisture) which produces relatively low particulate emission levels when properly burned. Still other operations, such as sawmills, burn a varying mixture of bark and wood waste that results in PM emissions somewhere between these two extremes. Additionally, NO_x emissions from bark boilers are typically low in comparison to NO_x emissions from sanderdust-fired boilers at urea formaldehyde process particleboard plants.

Furnace design and operating conditions are particularly important when firing wood waste. For example, because of the high moisture content that may be present in wood waste, a larger than usual area of refractory surface is often necessary to dry the fuel before combustion. In addition, sufficient secondary air must be supplied over the fuel bed to burn the volatiles that account for most of the combustible material in the waste. When proper drying conditions do not exist, or when secondary combustion is incomplete, the combustion temperature is lowered, and increased PM, CO, and organic compound emissions may result. Significant variations in fuel moisture content can cause short-term emissions to fluctuate.

Flyash reinjection, which is commonly used with larger boilers to improve fuel efficiency, has a considerable effect on PM emissions. Because a fraction of the collected flyash is reinjected into the boiler, the dust loading from the furnace and, consequently, from the collection device increase significantly per unit of wood waste burned. More recent boiler installations typically separate the collected particulate into

large and small fractions in sand classifiers. The larger particles, which are mostly carbon, are reinjected into the furnace. The smaller particles, mostly inorganic ash and sand, are sent to ash disposal.

1.6.3.2 Greenhouse Gases[12-17]

Carbon dioxide (CO_2), methane (CH_4), and nitrous oxide (N_2O) emissions are all produced during wood waste combustion. Nearly all of the fuel carbon (99 percent) in wood waste is converted to CO_2 during the combustion process. This conversion is relatively independent of firing configuration. Although the formation of CO acts to reduce CO_2 emissions, the amount of CO produced is insignificant compared to the amount of CO_2 produced. The majority of the fuel carbon not converted to CO_2 is due to incomplete combustion and is entrained in the bottom ash. CO_2 emitted from this source may not increase total atmospheric CO_2, however, because emissions may be offset by the offtake of CO_2 by regrowing biomass.

Formation of N_2O during the combustion process is governed by a complex series of reactions and its formation is dependent upon many factors. Formation of N_2O is minimized when combustion temperatures are kept high (above 1475°F) and excess air is kept to a minimum (less than 1 percent). N_2O emissions for wood waste combustion are not significant except for fluidized bed combustion (FBC), where localized areas of lower temperatures in the fuel bed produce N_2O emissions an order of magnitude greater than emissions from stokers.

Methane emissions are highest during periods of low-temperature combustion or incomplete combustion, such as the start-up or shut-down cycle for boilers. Typically, conditions that favor formation of N_2O also favor emissions of CH_4.

1.6.4 Controls

Currently, the four most common control devices used to reduce PM emissions from wood-fired boilers are mechanical collectors, wet scrubbers, electrostatic precipitators (ESPs), and fabric filters. The use of multitube cyclone (or multiclone) mechanical collectors provides particulate control for many fuel-fired boilers. Often, two multiclones are used in series, allowing the first collector to remove the bulk of the dust and the second to remove smaller particles. The efficiency of this arrangement varies from 65 to 95 percent. The most widely used wet scrubbers for wood-fired boilers are venturi scrubbers. With gas-side pressure drops exceeding 15 inches of water, particulate collection efficiencies of 90 percent or greater have been reported for venturi scrubbers operating on wood-fired boilers.

Fabric filters (i. e., baghouses) and ESPs are employed when collection efficiencies above 95 percent are required. When applied to wood-fired boilers, ESPs are often used downstream of mechanical collector precleaners which remove larger-sized particles. Collection efficiencies of 93 to 99.8 percent for PM have been observed for ESPs operating on wood-fired boilers.

A variation of the ESP is the electrostatic gravel bed filter. In this device, PM in flue gases is removed by impaction with gravel media inside a packed bed; collection is augmented by an electrically charged grid within the bed. Particulate collection efficiencies are typically near 95 percent.

Fabric filters have had limited applications to wood-fired boilers. The principal drawback to fabric filtration, as perceived by potential users, is a fire danger arising from the collection of combustible carbonaceous fly ash. Steps can be taken to reduce this hazard, including the installation of a mechanical collector upstream of the fabric filter to remove large burning particles of fly ash (i. e., "sparklers"). Despite complications, fabric filters are generally preferred for boilers firing salt-laden wood. This fuel produces fine particulates with a high salt content. Fabric filters are capable of high fine particle collection efficiencies; in addition, the salt content of the particles has a quenching effect, thereby reducing fire

hazards. In two tests of fabric filters operating on salt-laden wood-fired boilers, particulate collection efficiencies were above 98 percent.

For stoker and FBC boilers, overfire air ports may be used to lower NO_x emissions by staging the combustion process. In those areas of the U. S. where NO_x emissions must be reduced to their lowest levels, the application of selective noncatalytic reduction (SNCR) to waste wood-fired boilers has been accomplished; the application of selective catalytic reduction (SCR) is being contemplated. Both systems are postcombustion NO_x reduction techniques in which ammonia (or urea) is injected into the flue gas to selectively reduce NO_x to nitrogen and water. In one application of SNCR to an industrial wood-fired boiler, NO_x reduction efficiencies varied between 35 and 75 percent as the ammonia-to-NO_x ratio increased from 0.4 to 3.2.

Emission factors and emission factor ratings for wood waste boilers are summarized in Tables 1.6-1, 1.6-2, 1.6-3, 1.6-4, and 1.6-5.[18-19] Tables in this section present emission factors on a weight basis (lb/ton). To convert to an energy basis (lb/MMBtu), divide by a heating value of 9.0 MMBtu/ton. Emission factors are for uncontrolled combustors unless otherwise indicated. Cumulative particle size distribution data and associated emission factors are presented in Tables 1.6-6 and 1.6-7. Uncontrolled and controlled size-specific emission factors are plotted in Figure 1.6-1 and Figure 1.6-2. All emission factors presented are based on the feed rate of wet, as-fired wood with average properties of 50 weight percent moisture and 4500 Btu/lb higher heating values.

1.6.5 Updates Since the Fifth Edition

The Fifth Edition was released in January 1995. Revisions to this section since that date are summarized below. For further detail, consult the memoranda describing each supplement or the background report for this section. These and other documents can be found on the CHIEF electronic bulletin board (919-541-5742), or on the new EFIG home page (http://www.epa.gov/oar/oaqps/efig/).

Supplement A, February 1996

- Significant figures were added to some PM and PM-10 emission factors.
- In the table with NO_x and CO emission factors, text was added in the footnotes to clarify meaning.

Supplement B, October 1996

- SO_x, CH_4, N_2O, CO_2, speciated organics, and trace elements emission factors were corrected.
- Several HAP emission factors were updated.

Supplement D, February 1998

- Table 1.6-1, the PM-10 and one PM emission factors were revised to present two significant figures and the PM-10 emission factor for wood-fired boilers with mechanical collectors without flyash reinjection was revised to 2.6 lb/ton to reflect that these values are based on wood with 50% moisture. A typographical error in the wet scrubber emission factor for PM-10 was corrected.

- Table 1.6-2, the SO_x emission factors for all boiler categories were revised to 0.075 lb/ton to reflect that these factors are based on wood with 50% moisture.

- Tables 1.6-4 and 1.6-5 were re-titled to reflect that the speciated organic and trace element analysis presented in these tables are compiled from wood-fired boilers equipped with a variety of PM control technologies.

Supplement D, August 1998

- Table 1.6-4, the emission factor for trichlorotrifluoroethane was removed. The phenol emission factor was corrected to 1.47E-04; the phenanthrene factor was corrected to 5.02E-05; the chrysene factor was corrected to 4.52E-07; and, the polychlorinated dibenzo-p-furans factor was corrected to 2.9E-08.

Table 1.6-1. EMISSION FACTORS FOR PARTICULATE MATTER (PM), PARTICULATE MATTER LESS THAN 10 MICRONS (PM-10), AND LEAD (Pb) FROM WOOD WASTE COMBUSTION[a]

Source Category (SCC)	PM[b]		PM-10[c]		Pb[d]	
	Emission Factor (lb/ton)	EMISSION FACTOR RATING	Emission Factor (lb/ton)	EMISSION FACTOR RATING	Emission Factor (lb/ton)	EMISSION FACTOR RATING
Bark-fired boilers (1-01-009-01, 1-02-009-01, 1-02-009-04, 1-03-009-01)						
Uncontrolled	47	B	17	D	2.9 E-03	D
Mechanical collector with flyash reinjection	14	B	11	D	ND	NA
without flyash reinjection	9.0	B	3.2	D	ND	NA
Wet scrubber	2.9	D	2.5	D	ND	NA
Wood/bark-fired boilers (1-01-009-02, 1-02-009-02, 1-02-009-05, 1-03-009-02)						
Uncontrolled	7.2	C	6.5	E	ND	NA
Mechanical collector with flyash reinjection	6.0	C	5.5	E	3.2 E-04[e]	D
without flyash reinjection	5.4	C	1.7	E	3.2 E-04[e]	
Wet scrubber	0.48	D	0.47	E	3.5 E-04	D
Electrostatic precipitator	0.04	D	ND	NA	1.6 E-05	D
Wood-fired boilers (1-01-009-03, 1-02-009-03, 1-02-009-06, 1-03-009-03)						
Uncontrolled	8.8	C	ND	NA	ND	NA
Mechanical collector without flyash reinjection	4.2	C	2.6[f]	D	3.1 E-04	D
Electrostatic precipitator	0.17	D	ND	NA	1.1 E-03	D

[a] Units are lb of pollutant/ton of wood waste burned. To convert from lb/ton to kg/Mg, multiply by 0.5. To convert from lb/ton to lb/MMBtu, multiply by 0.11. Emission factors are based on wet, as-fired wood waste with average properties of 50 weight % moisture and 4500 Btu/lb higher heating value. Before applying the factors to wood with moisture content other than 50%, or with a Btu content other than 4500 Btu/lb, multiply the factor by the appropriate ratio: (100-M)/50, where M is the percent moisture; (H/4500), where H is the Btu/lb. PM-10 = particulate matter less than 10 micrometers. SCC = Source Classification Code. ND = no data. NA = not applicable.
[b] References 11,20-24.
[c] References 1,21,25.
[d] References 11,21-23,26.
[e] Due to lead's relative volatility, it is assumed that flyash reinjection does not have a significant effect on lead emissions following mechanical collectors.
[f] Based on one test in which 61% of emitted PM was less than 10 micrometer in size.

Table 1.6-2. EMISSION FACTORS FOR NITROGEN OXIDES (NO_x), SULFUR OXIDES (SO_x), AND CARBON MONOXIDE (CO) FROM WOOD WASTE COMBUSTION[a]

Source Category (SCC)	NO_x[b]		SO_x[c]		CO[d]	
	Emission Factor (lb/ton)	EMISSION FACTOR RATING	Emission Factor (lb/ton)	EMISSION FACTOR RATING	Emission Factor (lb/ton)	EMISSION FACTOR RATING
Fuel cell/Dutch oven boiler (no SCC)	0.38 (0.0033 - 1.5)	C	0.075 (0.01 - 0.2)	B	6.6 (0.65 - 21)	C
Stoker boilers (no SCC)	1.5 (0.66 - 3.6)	C	0.075 (0.01- 0.2)	B	13.6 (1.9 - 80)	C
FBC boilers (no SCC)	2.0	D	0.075 (0.01 - 0.2)	B	1.4 (0.47 - 2.4)	D

[a] Units are lb of pollutant/ton of wood waste burned. To convert from lb/ton to kg/Mg, multiply by 0.5. To convert from lb/ton to lb/MMBtu, multiply by 0.11. Emission factors are based on wet, as-fired wood waste with average properties of 50 weight % moisture and 4500 Btu/lb higher heating value. Before applying the factors to wood with moisture content other than 50%, or with a Btu content other than 4500 Btu/lb, multiply the factor by the appropriate ratio: (100-M)/50, where M is the percent moisture; (H/4500), where H is the Btu/lb. SCC = Source Classification Code. FBC = fluidized bed combustion.

[b] References 20-22,27-28. NO_x formation is primarily a function of wood nitrogen content. Values in parenthesis represent the range of emission factors.

[c] Reference 29. Lower limit of the range (in parentheses) should be used for wood and higher values for bark.

[d] References 11,20-22,27,30-32. Values in parenthesis represent the range of emission factors.

Table 1.6-3. EMISSION FACTORS FOR TOTAL ORGANIC COMPOUNDS (TOC), METHANE (CH_4), NITROUS OXIDE (N_2O), AND CARBON DIOXIDE (CO_2) FROM WOOD WASTE COMBUSTION[a]

Source Category (SCC)	TOC[b]		CH_4[c]		N_2O[d]		CO_2[e]	
	Emission Factor (lb/ton)	EMISSION FACTOR RATING	Emission Factor (lb/ton)	EMISSION FACTOR RATING	Emission Factor (lb/ton)	EMISSION FACTOR RATING	Emission Factor (lb/ton)	EMISSION FACTOR RATING
Fuel cell/Dutch oven boilers (no SCC)	0.18	C	ND	NA	ND	NA	1900	B
Stoker boilers (no SCC)	0.22	C	0.1	E	0.04	D	2000	B
FBC boilers (no SCC)	ND	NA	ND	NA	0.2	E	1800	B

[a] Units are lb of pollutant/ton of wood waste burned. To convert from lb/ton to kg/Mg, multiply by 0.5. To convert from lb/ton to lb/MMBtu, multiply by 0.11. Emission factors are based on wet, as-fired wood waste with average properties of 50 weight % moisture and 4500 Btu/lb higher heating value. Before applying the factors to wood with moisture content other than 50%, or with a Btu content other than 4500 Btu/lb, multiply the factor by the appropriate ratio: (100-M)/50, where M is the percent moisture; (H/4500), where H is the Btu/lb. SCC = Source Classification Code. FBC = fluidized bed combustion. ND = no data. NA = not applicable.

[b] References 11,22-23,27. Emissions measured as total hydrocarbons.

[c] Reference 17.

[d] References 14-15.

[e] References 1,11,20-23,27,30-32.

Table 1.6-4. EMISSION FACTORS FOR SPECIATED ORGANIC COMPOUNDS FROM WOOD WASTE COMBUSTION WITH PM CONTROLS[a]

Organic Compound[b]	Average Emission Factor (lb/ton)	EMISSION FACTOR RATING
Phenols[cc]	1.47 E-04[c]	C
Acenaphthene[dd]	4.10 E-06[d]	C
Fluorene[dd]	8.22 E-06[e]	C
Phenanthrene[dd]	5.02 E-05[c]	B
Anthracene	3.3 E-06[f]	C
Fluoranthene[dd]	1.83 E-05[g]	B
Benzo(a)anthracene[dd]	3.27 E-06[h]	C
Benzo(k)fluoranthene[dd]	7.65 E-07[j]	E
Benzo(b+k)fluoranthene[dd]	2.9 E-05[k]	C
Benzofluoranthenes[dd]	1.08 E-06[m,n]	E
Benzo(a)pyrene[dd]	6.75 E-08[m,n]	E
Benzo(g,h,i)perylene[dd]	1.41 E-06[p]	D
Chrysene[dd]	4.52 E-07[q]	C
Indeno(1,2,3,c,d)pyrene[dd]	3.6 E-07[r]	D
Polychlorinated dibenzo-p-dioxins	1.2 E-08[k,s,t]	C
Polychlorinated dibenzo-p-furans	2.9E-08[k,s,u]	C
Acenaphthylene[dd]	4.76 E-05[v]	B
Methyl anthracene[dd]	1.4 E-04[m]	D
Acrolein[dd]	4.0 E-06[m]	D
Solicyladehyde	2.3 E-05[m]	D
Benzaldehyde	1.2 E-05[m]	D
Formaldehyde[dd]	8.2 E-03[w]	B
Acetaldehyde[dd]	1.92 E-03[w]	B
Benzene[dd]	9.95 E-03[x]	B
Naphthalene[dd]	3.39 E-03[y]	C
2,3,7,8-Tetrachlorodibenzo-p-dioxin[dd]	3.6 E-11[k]	D
2-Chlorophenol[dd]	5.13 E-07[m,n]	E
2,4-Dinitrophenol[dd]	4.23 E-06[m,n]	E
Methane	1.12 E-02[z]	D
4-Nitrophenol[dd]	2.97 E-06[m]	E
Pyrene	1.67 E-05[bb]	B

[a] Units are lb of pollutant/ton of wood waste burned. To convert from lb/ton to kg/Mg, multiply by 0.5. To convert from lb/ton to lb/MMBtu, multiply by 0.11. Emission factors are based on wet, as-fired wood waste with average properties of 50 weight % moisture and 4500 Btu/lb higher heating value. Before applying the factors to wood with moisture content other than 50%, or with a Btu content other than 4500 Btu/lb, multiply the factor by the appropriate ratio: (100-M)/50, where M is the percent moisture; (H/4500), where H is the Btu/lb. Source Classification Codes are 1-01-009-01/02/03, 1-02-009-01/02/03/04/05/06/07, and 1-03-009-01/02/03.

[b] Pollutants in this table represent organic species measured for wood waste combustors equipped with PM controls (i.e., fabric filters, multi-cyclones, ESP, and wet scrubbers). Other organic species may also have been emitted but either were not measured or were present at concentrations below analytical limits.

[c] References 32-35.

Table 1.6-4 (cont.).

[d] References 34-39.
[e] References 34-41.
[f] References 34-39,41.
[g] References 32-41.
[h] References 34,37,39,40.
[j] References 34,36.
[k] References 11,19-23,26,31,42.
[m] Based on data from one source test.
[n] Reference 35.
[p] References 35-36,39.
[q] References 34-35,39-40.
[r] References 35,39.
[s] Emission factors are for total dioxins and furans, not toxic equivalents.
[t] Excludes data from combustion of salt-laden wood. For salt-laden wood, emission factor is 1.3 E-06 lb/ton with a D rating.
[u] Excludes data from combustion of salt-laden wood. For salt-laden wood, emission factor is 5.5 E-07 lb/ton with a D rating.
[v] References 32,34-40.
[w] References 32-41,43.
[x] References 32-40,43.
[y] References 32-34,37,40-41.
[z] Reference 44.
[aa] References 34,36-38.
[bb] References 32,34-36,37-41.
[cc] Emission factor value includes phenol, which is a hazardous air pollutant (HAP), plus substituted phenols which are not HAPs.
[dd] Hazardous air pollutant.

Table 1.6-5. EMISSION FACTORS FOR TRACE ELEMENTS FROM WOOD WASTE COMBUSTION WITH PM CONTROLS[a]

Trace Element[b]	Average Emission Factor (lb/ton)	EMISSION FACTOR RATING
Chromium (VI)	4.6 E-05[c]	D
Copper	3.73 E-04[d]	B
Zinc	2.51 E-03[d]	B
Barium	4.4 E-03[e]	D
Potassium	7.8 E-01[e]	D
Sodium	1.8 E-02[e]	D
Iron	4.4 E-02[c]	D
Lithium	7.0 E-05[e]	D
Boron	8.0 E-04[e]	D
Chlorine	7.8 E-03[e]	D
Vanadium	1.2 E-04[e]	D
Cobalt	1.3 E-04[e]	D
Thorium	1.7 E-05[e]	D
Tungsten	1.1 E-05[e]	D
Dysprosium	1.3 E-05[e]	D
Samarium	2.0 E-05[e]	D
Neodymium	2.6 E-05[e]	D
Praseodymium	3.0 E-05[e]	D
Iodine	1.8 E-05[e]	D
Tin	3.1 E-05[e]	D
Molybdenum	1.9 E-04[e]	D
Niobium	3.5 E-05[e]	D
Zirconium	3.5 E-04[e]	D
Yttrium	5.6 E-05[e]	D
Rubidium	1.2 E-03[e]	D
Bromine	3.9 E-04[e]	D
Germanium	2.5 E-06[e]	D
Arsenic	8.53 E-05[f]	B
Cadmium	2.12 E-05[f]	B
Chromium (Total)	1.56 E-04[g]	B
Lead	4.45 E-04[d]	B
Manganese	1.26 E-02[f]	B
Mercury	5.15 E-06[h]	C
Nickel	6.90 E-05[j]	B
Selenium	4.59 E-05[e,k]	E

[a] Units are lb of pollutant/ton of wood waste burned. To convert from lb/ton to kg/Mg, multiply by 0.5. To convert from lb/ton to lb/MMBtu, multiply by 0.11. Emission factors are based on wet, as-fired wood waste with average properties of 50 weight % moisture and 4500 Btu/lb higher heating value. Before applying the factors to wood with moisture content other than 50%, or with a Btu content other than 4500 Btu/lb, multiply the factor by the appropriate ratio: (100-M)/50, where M is the percent moisture; (H/4500), where H is the Btu/lb. Source Classification Codes are 1-010-09-01/02/03, 1-02-009-01/02/03/04/05/06/07, and 1-03-009-01/02/03.

[b] Pollutants in this table represent metal species measured for wood waste combustors equipped with PM controls (i.e., fabric filters, multi-cyclones, ESP, and wet scrubbers). Other metal species may also have been emitted but were either not measured or were present at concentrations below analytical limits.

[c] References 11,19-22.

[d] References 32,34-41.

[e] Based on data from one source test.

[f] References 32,34-37,39,41.

[g] References 32,34-39,41.

[h] References 32,34-35,37.

[j] References 32,34-37,40.

[k] References 40.

Table 1.6-6. CUMULATIVE PARTICLE SIZE DISTRIBUTION AND SIZE-SPECIFIC EMISSION FACTORS FOR BARK-FIRED SPREADER STOKER BOILERS[a]

EMISSION FACTOR RATING: D

Particle Size[b] (μm)	Cumulative Mass % ≤ Stated Size				Cumulative Emission Factor[c] (lb/ton)			
		Controlled				Controlled		
	Uncontrolled	Multiple Cyclone[d]	Multiple Cyclone[e]	Scrubber[f]	Uncontrolled	Multiple Cyclone[d]	Multiple Cyclone[e]	Scrubber[f]
15	42	90	40	92	20.2	12.6	3.6	2.64
10	35	79	36	87	16.8	11.0	3.24	2.50
6	28	64	30	78	13.4	9.0	2.7	2.24
2.5	21	40	19	56	10.0	5.6	1.72	1.62
1.25	15	26	14	29	7.2	3.6	1.26	0.84
1.00	13	21	11	23	6.2	3.0	1.0	0.66
0.625	9	15	8	14	4.4	2.2	0.72	0.40
Total	100	100	100	100	48	14	9.0	2.88

[a] Reference 45. Emission factors are based on wet, as-fired wood waste with average properties of 50 weight % moisture and 4500 Btu/lb higher heating value. Before applying the factors to wood with moisture content other than 50%, or with a Btu content other than 4500 Btu/lb, multiply the factor by the appropriate ratio: (100-M)/50, where M is the percent moisture; (H/4500), where H is the Btu/lb. Source Classification Codes are 1-01-009-01, 1-02-009-01, 1-02-009-04, and 1-03-009-01.

[b] Expressed as aerodynamic equivalent diameter.

[c] Units are lb of pollutant/ton of wood waste burned. To convert from lb/ton to kg/Mg, multiply by 0.5. To convert from lb/ton to lb/MMBtu, multiply by 0.11.

[d] With flyash reinjection.

[e] Without flyash reinjection.

[f] Assumed control efficiency for scrubber is 94%.

Table 1.6-7. CUMULATIVE PARTICLE SIZE DISTRIBUTION AND SIZE-SPECIFIC EMISSION FACTORS FOR WOOD/BARK-FIRED BOILERS[a]

EMISSION FACTOR RATING: E

Particle Size[b] (μm)	Cumulative Mass % ≤ Stated Size					Cumulative Emission Factor[c] (lb/ton)				
		Controlled					Controlled			
	Uncontrolled[d]	Multiple Cyclone[e]	Multiple Cyclone[f]	Scrubber[g]	DEGF	Uncontrolled[d]	Multiple Cyclone[e]	Multiple Cyclone[f]	Scrubber[g]	DEGF[g]
15	94	96	35	98	77	6.77	5.76	1.90	0.431	0.246
10	90	91	32	98	74	6.48	5.46	1.72	0.432	0.236
6	86	80	27	98	69	6.20	4.80	1.46	0.432	0.220
2.5	76	54	16	98	65	5.47	3.24	0.86	0.432	0.208
1.25	69	30	8	96	61	4.97	1.80	0.44	0.422	0.196
1.00	67	24	6	95	58	4.82	1.44	0.32	0.418	0.186
0.625	ND	16	3	ND	51	ND	0.96	0.162	ND	0.164
Total	100	100	100	100	100	7.2	6.0	5.4	0.44	0.32

[a] Reference 45. Emission factors are based on wet, as-fired wood waste with average properties of 50 weight % moisture and 4500 Btu/lb higher heating value. Before applying the factors to wood with moisture content other than 50%, or with a Btu content other than 4500 Btu/lb, multiply the factor by the appropriate ratio: (100-M)/50, where M is the percent moisture; (H/4500), where H is the Btu/lb. Source Classification Codes are 1-01-009-02, 1-02-009-02, 1-02-009-05, and 1-03-009-02. ND = no data. DEGF = dry electrostatic granular filter.

[b] Expressed as aerodynamic equivalent diameter.

[c] Units are lb of pollutant/ton of wood bark burned. To convert from lb/ton to kg/Mg, multiply by 0.5. To convert from lb/ton to lb/MMBtu, multiply by 0.11.

[d] From data on underfeed stokers. May also be used as size distribution for wood-fired boilers.

[e] From data on spreader stokers with flyash reinjection.

[f] From data on spreader stokers without flyash reinjection.

[g] From data on Dutch ovens. Assumed control efficiency is 94%.

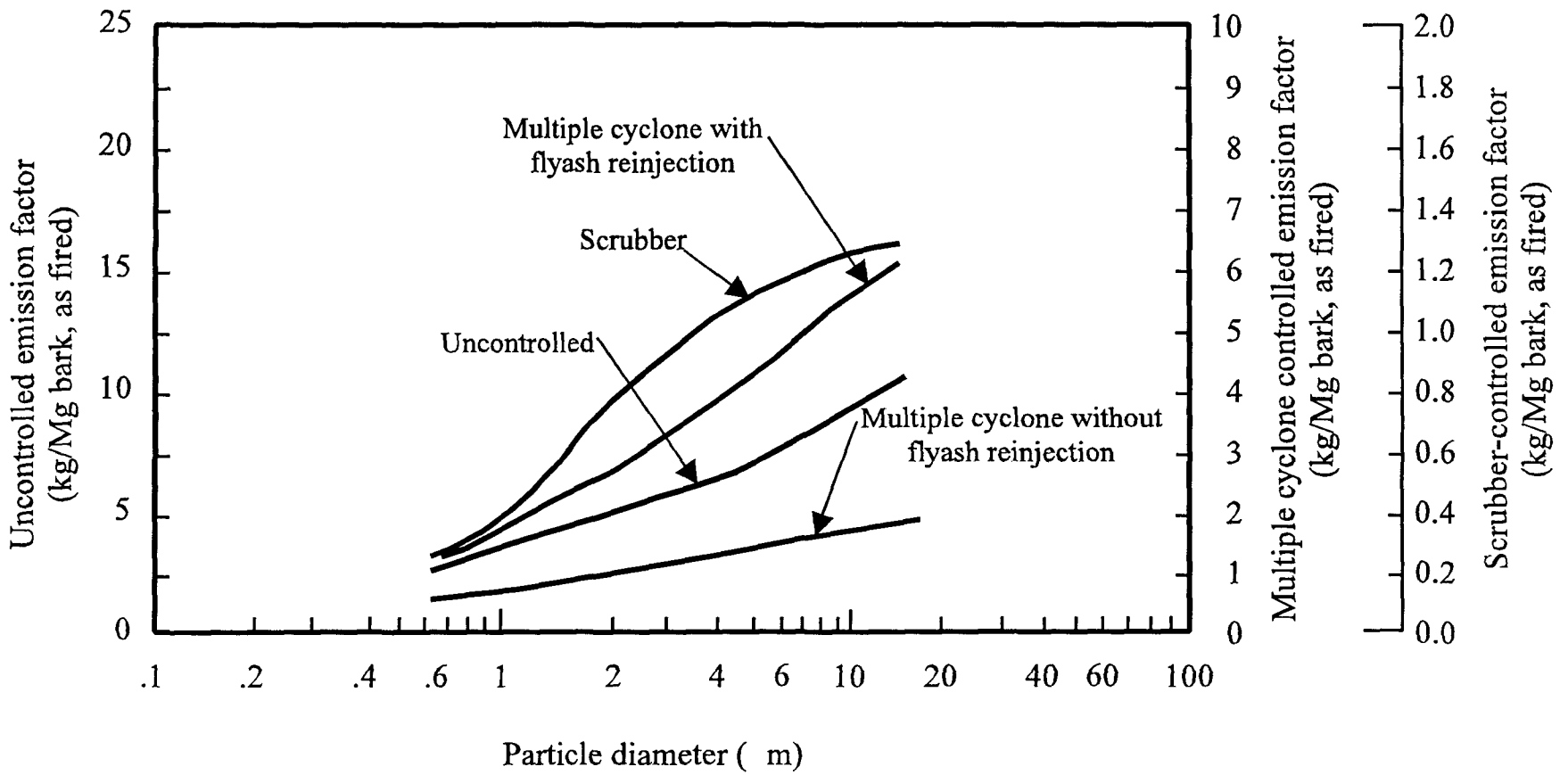

Figure 1.6-1. Cumulative size-specific particulate matter emission factors for bark-fired boilers.

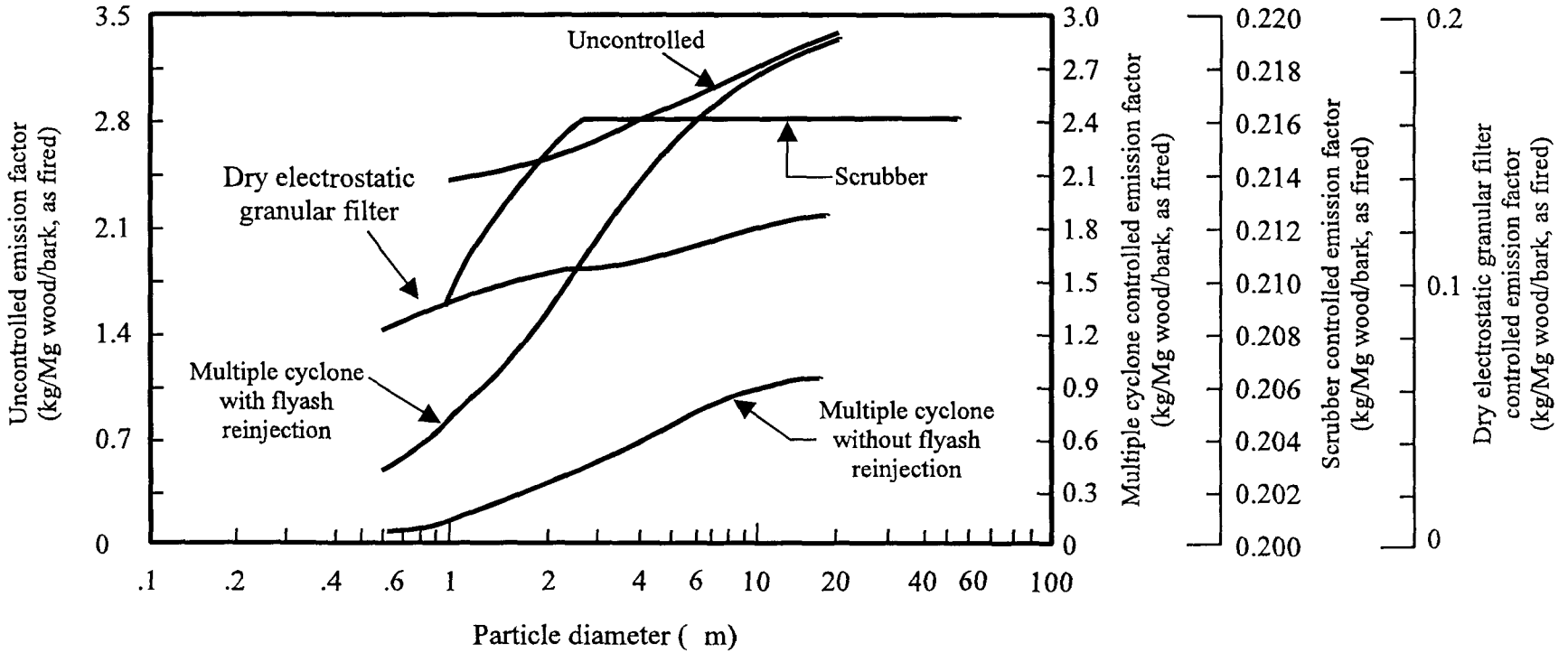

Figure 1.6-2. Cumulative size-specific particulate matter emission factors for wood/bark-fired boilers.

References For Section 1.6

1. *Emission Factor Documentation For AP-42 Section 1.6 — Wood Waste Combustion In Boilers*, Technical Support Division, Office of Air Quality Planning and Standards, U. S. Environmental Protection Agency, Research Triangle Park, NC, April 1993.

2. *Steam*, 38th Edition, Babcock and Wilcox, New York, NY, 1972.

3. *Atmospheric Emissions From The Pulp And Paper Manufacturing Industry*, EPA-450/1-73-002, U. S. Environmental Protection Agency, Research Triangle Park, NC, September 1973.

4. *C-E Bark Burning Boilers*, C-E Industrial Boiler Operations, Combustion Engineering, Inc., Windsor, CT, 1973.

5. *Nonfossil Fuel Fired Industrial Boilers — Background Information*, EPA-450/3-82-007, U. S. Environmental Protection Agency, Research Triangle Park, NC, March 1982.

6. *Control Of Particulate Emissions From Wood-Fired Boilers*, EPA 340/1-77-026, U. S. Environmental Protection Agency, Washington, DC, 1977.

7. *Background Information Document For Industrial Boilers*, EPA 450/3-82-006a, U. S. Environmental Protection Agency, Research Triangle Park, NC, March 1982.

8. E. F. Aul, Jr. and K. W. Barnett, "Emission Control Technologies For Wood-Fired Boilers", Presented at the Wood Energy Conference, Raleigh, NC, October 1984.

9. G. Moilanen, et al., "Noncatalytic Ammonia Injection For NO_x Reduction on a Waste Wood Fired Boiler", Presented at the 80th Annual Meeting of the Air Pollution Control Association, New York, NY, June 1987.

10. "Information On The Sulfur Content Of Bark And Its Contribution To SO_2 Emissions When Burned As A Fuel", H. Oglesby and R. Blosser, *Journal Of The Air Pollution Control Agency, 30*(7):769-772, July 1980.

11. Written communication from G. Murray, California Forestry Association, Sacramento, CA to E. Aul, Edward Aul & Associates, Inc., Chapel Hill, NC, Transmittal of Wood Fired Boiler Emission Test, April, 24, 1992.

12. L. P. Nelson, L. M. Russell, and J. J. Watson, "Global Combustion Sources of Nitrous Oxide Emissions", Research Project 2333-4 Interim Report, Radian Corporation, Sacramento, CA, 1991.

13. Rebecca L. Peer, Eric P. Epner, and Richard S. Billings, *Characterization Of Nitrous Oxide Emission Sources*, EPA Contract No. 68-D1-0031, Research Triangle Park, NC, 1995.

14. Steven D. Piccot, Jennifer A. Buzun, and H. Christopher Frey, *Emissions And Cost Estimates For Globally Significant Anthropogenic Combustion Sources Of NO_x, N_2O, CH_4, CO, And CO_2*, EPA Contract No. 68-02-4288, Research Triangle Park, NC, 1990.

15. G. Marland, and R. M. Rotty, *Carbon Dioxide Emissions From Fossil Fuels: A Procedure For Estimation And Results For 1951-1981*, DOE/NBB-0036 TR-003, Carbon Dioxide Research Division, Office of Energy Research, U.S. Department of Energy, Oak Ridge, TN, 1983.

16. *Sector-Specific Issues And Reporting Methodologies Supporting The General Guidelines For The Voluntary Reporting Of Greenhouse Gases Under Section 1605(b) Of The Energy Policy Act Of 1992*, Volume 2 of 3, U.S. Department of Energy, DOE/PO-0028, 1994.

17. R. A. Kester, *Nitrogen Oxide Emissions From A Pilot Plant Spreader Stoker Bark Fired Boiler*, Department of Civil Engineering, University of Washington, Seattle, WA, December 1979.

18. A. Nunn, *NO_x Emission Factors For Wood Fired Boilers*, EPA-600/7-79-219, U. S. Environmental Protection Agency, September 1979.

19. *Hazardous Air Emissions Potential From A Wood-Fired Furnace (and Attachments)*, A. J. Hubbard, Wisconsin Department of Natural Resources, Madison, WI, July 1991.

20. *Environmental Assessment Of A Wood-Waste-Fired Industrial Watertube Boiler*, EPA Contract No. 68-02-3188, Acurex Corporation, Mountain View, CA, March 1984.

21. *Evaluation Test On A Wood Waste Fired Incinerator At Pacific Oroville Power Inc.*, Test Report No. C-88-050, California Air Resources Board, Sacramento, CA, May 1990.

22. *Evaluation Test On Twin Fluidized Bed Wood Waste Fueled Combustors Located In Central California*, Test Report No. C-87-042, California Air Resources Board, Sacramento, CA, February, 1990.

23. *A Polycyclic Organic Materials Study For Industrial Wood-Fired Boilers*, Technical Bulletin No. 400, National Council of the Paper Industry For Air and Stream Improvement, New York, NY, May 1983.

24. *Compilation Of Air Pollutant Emission Factors, Supplement A*, Section 1.6, U. S. Environmental Protection Agency, Research Triangle Park, NC, 1986.

25. *Emission Test Report, Owens-Illinois Forest Products Division, Big Island, Virginia*, EMB Report 80-WFB-2, U. S. Environmental Protection Agency, Research Triangle Park, NC, February 1980.

26. *National Dioxin Study Tier 4, Combustion Sources: Final Test Report, Site 7, Wood Fired Boiler WFB-A*, EPA-450/4-84-014p, U. S. Environmental Protection Agency, Research Triangle Park, NC, April 1987.

27. *A Study Of Nitrogen Oxides Emissions From Wood Residue Boilers*, Technical Bulletin No. 102, National Council of the Paper Industry for Air and Stream Improvement, New York, NY, November 1979.

28. H. S. Oglesby and R. O. Blosser, "Information On The Sulfur Content Of Bark And Its Contribution To SO_2 Emissions When Burned As A Fuel", *Journal Of The Air Pollution Control Agency, 30*(7):769-772, July 1980.

29. *Carbon Monoxide Emissions From Selected Combustion Sources Based On Short-Term Monitoring Records*, Technical Bulletin No. 416, National Council of the Paper Industry For Air and Stream Improvement, New York, NY, January 1984.

30. *Volatile Organic Carbon Emissions From Wood Residue Fired Power Boilers In The Southeast*, Technical Bulletin No. 455, National Council of the Paper Industry For Air and Stream Improvement, New York, NY, April 1985.

31. *A Study Of Formaldehyde Emissions From Wood Residue-Fired Boilers*, Technical Bulletin No. 622, National Council of the Paper Industry For Air and Stream Improvement, New York, NY, January 1992.

32. Source Emission Testing of the Wood-Fired Boiler Exhaust at Sierra Pacific, Burney, California, Performed for the Timber Association of California, Galston Technical Services, February 1991.

33. Source Emission Testing of the Wood-fired Boiler #1 Exhaust Stack at Wheelabrator Shasta Energy Company (TAC Site 9), Anderson, California, Performed for the Timber Association of California, Galston Technical Services, January 1991.

34. Source Emission Testing of the Wood-fired boiler at Catalyst Hudson, Inc., Anderson California, Performed for the Timber Association of California, Galston Technical Services, February 1991.

35. Source Emission Testing of the Wood-fired Boiler at Big Valley Timber Company, Bieber, California, Performed for the Timber Association of California, Galston Technical Services, February, 1991.

36. Source Emission Testing of the CE Wood-Fired Boiler at Roseburg Forest Products (TAC Site #3), Performed for the Timber Association of California, Galston Technical Services, January 1991.

37. Source Emission Testing of the Wood-fired Boiler #3 Exhaust at Georgia Pacific, Fort Bragg, California, Performed for the Timber Association of California, Galston Technical Services, February 1991.

38. Source Emission Testing of the Wood-fired Boiler "C" Exhaust at Pacific Timber, Scotia, California, Performed for the Timber Association of California, Galston Technical Services, February 1991.

39. Source Emission Testing of the Wood-fired Boiler Exhaust at Bohemia, Inc., Rocklin, California, Prepared for the Timber Association of California, Galston Technical Services, December 1990.

40. Source Emission Testing of the Wood-fired Boiler at Yanke Energy, North Fork, California, Performed for the Timber Association of California, Galston Technical Services, January 1991.

41. Source Emission Testing of the Wood-fired Boiler Exhaust at Miller Redwood Co., Crescent City, California, Performed for the Timber Association of California, Galston Technical Services, February 1991.

42. *Emission Test Report, St. Joe Paper Company, Port St. Joe, Florida*, EMB Report 80-WFB-5, U. S. Environmental Protection Agency, Research Triangle Park, NC, May 1980.

43. Source Emission Testing of the Wood-fired Boiler #5 Exhaust at Roseburg Forest Products, Anderson, California, Performed for the Timber Association of California, Galston Technical Services, January 1991.

44. *Nation Council Of The Paper Industry For Air And Stream Improvement,* An Air Emission Database for Wood Product Plant Combustion Units, Technical Bulletin No. 695. April 1995.

45. *Inhalable Particulate Source Category Report For External Combustion Sources*, EPA Contract No. 68-02-3156, Acurex Corporation, Mountain View, CA, January 1985.

1.7 Lignite Combustion

1.7.1 General[1-5]

Coal is a complex combination of organic matter and inorganic ash formed over eons from successive layers of fallen vegetation. Coals are classified by rank according to their progressive alteration in the natural metamorphosis from lignite to anthracite. Coal rank depends on the volatile matter, fixed carbon, inherent moisture, and oxygen, although no one parameter defines rank. Typically coal rank increases as the amount of fixed carbon increases and the amount of volatile matter decreases.

Lignite is a coal in the early stages of coalification, with properties intermediate to those of bituminous coal and peat. The two geographical areas of the U. S. with extensive lignite deposits are centered in the States of North Dakota and Texas. The lignite in both areas has a high moisture content (20 to 40 weight percent) and a low heating value (5,000 to 7,500 British thermal units per pound [Btu/lb], on a wet basis). Due to high moisture content and low Btu value, shipping the lignite would not be feasible; consequently, lignite is burned near where it is mined. A small amount is used in industrial and domestic situations, but lignite is mainly used for steam/electric production in power plants. Lignite combustion has advanced from small stokers to large pulverized coal (PC) and cyclone-fired units (greater than 500 megawatt).

The major advantages of firing lignite are that it is relatively abundant (in the North Dakota and Texas regions), relatively low in cost since it is surface mined, and low in sulfur content which can reduce the need for postcombustion sulfur emission control devices. The disadvantages are that more fuel and larger, more capital-intensive facilities are necessary to generate a unit of power with lignite than is the case with bituminous coal. The disadvantages arise because: (1) lignite's lower heating value means more fuel must be handled to produce a given amount of power; (2) the energy and maintenance costs of coal handling equipment are higher; (3) the high inherent moisture content of lignite decreases boiler efficiency; and (4) the ash characteristics of lignite require more attention to sootblowing and boiler operation to maintain high availability and reliability.

1.7.2 Firing Practices[3]

In a pulverized lignite-fired boiler, the fuel is fed from the stock pile into bunkers adjacent to the boiler. From there, the fuel is metered into several pulverizers which grind it to approximately 200-mesh particle size. A stream of hot air from the air preheater begins the fuel-drying process and conveys the fuel pneumatically to the burner nozzle where it is injected into the burner zone of the boiler. Firing configurations of boilers that fire pulverized lignite include tangential, horizontally opposed, front wall, cyclone, stoker, and fluidized bed combustor.

In the tangential firing method, the pulverized lignite is introduced from the corners of the boiler in vertical rows of burner nozzles. Such a firing mechanism produces a vortexing flame pattern which essentially uses the entire furnace enclosure as a burner. In front-wall firing and horizontally opposed firing boilers, the pulverized coal is introduced into the burner zone through a horizontal row of burners. This type of firing mechanism produces a more intense combustion pattern than the tangential design and has a slightly higher heat release rate in the burner zone itself.

In these methods of firing pulverized lignite, the ash is removed from the furnace both as fly ash and bottom ash. The bottom of the furnace is often characterized as either wet or dry, depending on whether the ash is removed as a liquid slag or as a solid. Pulverized coal units have been designed for both wet and dry bottoms, but the current practice is to design only dry bottom furnaces.

Another type of boiler firing lignite is the cyclone burner, which is a slag-lined high-temperature vortex burner. The coal is fed from the storage area to a crusher that reduces the lignite into particles of approximately 0.25 inch in diameter or less. Crushed lignite is partially dried in the crusher and is then fired in a tangential or vortex pattern into the cyclone burner. The temperature within the burner is hot enough to melt the ash to form a slag. Centrifugal force from the vortex flow forces the melted slag to the outside of the burner where it coats the burner walls with a thin layer of slag. As the solid lignite particles are fed into the burner, they are forced to the outside of the burner and are imbedded in the slag layer. The solid lignite particles are trapped there until complete burnout is attained. The ash from the burner is continuously removed through a slag tap which is flush with the furnace floor.

In a stoker furnace, the lignite is spread across a grate to form a bed which burns until the lignite is completely burned out. In such a mechanism, the lignite is broken up into approximately 2-inch pieces and is fed into the furnace by one of several feed mechanisms: underfeed, overfeed, or spreading. In most stoker units, the grate on which the lignite is burned gradually moves from one end of the furnace to the other. The lignite is spread on the grate in such a fashion that at the end of the grate only ash remains (i.e., all of the lignite has been burned to the final ash product). When the ash reaches the end of the grate, it falls into an ash collection hopper and is removed from the furnace. Stoker furnaces are dry-bottom furnaces and, as such, generally have lower heat release rates and lower temperature profiles than the corresponding pulverized or cyclone units.

There are two major categories of fluidized bed combustors (FBCs): (1) atmospheric FBCs, operating at or near ambient pressures, and (2) pressurized FBCs, operating between 4 and 30 atmospheres (60 to 450 pounds per square inch gauge). Pressurized FBC systems are not considered a demonstrated technology for lignite combustion. The two principal types of atmospheric FBCs are bubbling bed and circulating bed. The fundamental distinguishing feature between these types is the fluidization velocity. In the bubbling bed design, the fluidization velocity is relatively low, in order to minimize solids carryover or elutriation from the combustor. Circulating FBCs, however, employ high fluidization velocities to promote the carryover or circulation of the solids. High temperature cyclones are used in circulating bed FBCs and in some bubbling bed FBCs to capture the unburned solid fuel and bed material for return to the primary combustion chamber for more efficient fuel utilization.

1.7.3 Emissions [2-4,6-13]

The emissions generated from firing lignite, as with any coal, include the criteria pollutants particulate matter (PM), PM less than, or equal to, 10 micrometers in diameter (PM-10), sulfur oxides (SO_x), nitrogen oxides (NO_x), carbon monoxide (CO), and total organic compounds (TOC). The other pollutants generated include greenhouse gases, organics, trace elements, and acid gases.

Particulate Matter Emissions -

Emission levels for PM from lignite combustion are directly related to the ash content of the lignite and the firing configuration of the boiler. Pulverized coal-fired units fire much or all of the lignite in suspension. Cyclone furnaces collect much of the ash as molten slag in the furnace itself. Stokers (other than spreader) retain a large fraction of the ash in the fuel bed and bottom ash. Spreader stokers fire about 15 percent of the coal in suspension and the remainder in a bed.

Sulfur Oxides Emissions -

The SO_x emissions from lignite combustion are a function of the sulfur content of the lignite and the lignite composition (i.e., sulfur content, heating value, and alkali concentration). The conversion of lignite sulfur to SO_x is generally inversely proportional to the concentration of alkali constituents in the lignite. The alkali content is known to have a great effect on sulfur conversion and acts as a built-in sorbent for SO_x removal.

Nitrogen Oxides Emissions -

The NO_x emissions from lignite combustion are mainly a function of the boiler design, firing configuration, and excess air level. Tangential units, stoker boilers, and FBCs typically produce lower NO_x levels than wall-fired units and cyclones. The boilers constructed since implementation of the 1971 and 1979 New Source Performance Standards (40 Code of Federal Regulations, Part 60, Subparts D and Da, respectively) have NO_x controls integrated into the boiler design and have NO_x emission levels that are comparable to emission levels from small stokers. In most boilers, regardless of firing configuration, lower excess combustion air results in lower NO_x emissions. However, lowering the amount of excess air in a lignite-fired boiler can also affect the potential for ash fouling.

Carbon Monoxide Emissions[14] -

The CO emission rate from combustion sources depends on the oxidation efficiency of the fuel. By controlling the combustion process carefully, CO emissions can be minimized. Thus, if a unit is operated improperly or not maintained, the resulting concentrations of CO (as well as organic compounds) may increase by several orders of magnitude.

Greenhouse Gases [15-20] -

Carbon dioxide (CO_2), methane (CH_4), and nitrous oxide (N_2O) emissions are all produced during lignite combustion. Nearly all of the fuel carbon (99 percent) in lignite is converted to CO_2 during the combustion process. This conversion is relatively independent of firing configuration. Although the formation of CO acts to reduce CO_2 emissions, the amount of CO produced is insignificant compared to the amount of CO_2 produced. The majority of the fuel carbon not converted to CO_2 is due to incomplete combustion and is entrained in the bottom ash.

Formation of N_2O during the combustion process is governed by a complex series of reactions and its formation is dependent upon many factors. Formation of N_2O is minimized when combustion temperatures are kept high (above 1475°F) and excess air is kept to a minimum (less than 1 percent). N_2O emissions for lignite combustion are not significant except for fluidized bed combustion, where localized areas of lower temperatures in the fuel bed produce N_2O emissions significantly higher than emissions from stokers.

Methane emissions vary with the type of coal being fired and firing configuration, but are highest during periods of incomplete combustion, such as the start-up or shut-down cycle for coal-fired boilers. Typically, conditions that favor formation of N_2O also favor emissions of CH_4.

Organic Compounds -

Trace amounts of organic compounds are emitted during lignite combustion. As with CO emissions, the rate at which organic compounds are emitted depends on the combustion efficiency of the boiler. Therefore, combustion modifications that change combustion residence time, temperature, or turbulence may increase concentrations of organic compounds in the flue gas.

Organic emissions include volatile, semivolatile, and condensable organic compounds either present in the lignite or formed as a product of incomplete combustion (PIC). Organic emissions are primarily characterized by the criteria pollutant class of unburned vapor-phase hydrocarbons. These emissions include alkanes, alkenes, aldehydes, alcohols, and substituted benzenes (e.g., benzene, toluene, xylene, and ethyl benzene).

Polychlorinated dibenzo-p-dioxins and polychlorinated dibenzofurans (PCDD/PCDF) are formed during the combustion of lignite. Of primary interest environmentally are tetrachloro- through octachloro- dioxins and furans. Dioxin and furan emissions are influenced by the extent of destruction of organics during combustion and through reactions in the air pollution control equipment. The formation of PCDD/PCDF in air pollution control equipment is primarily dependent on flue gas temperature, with maximum potential for formation occurring at flue gas temperatures of 450 degrees to 650 degrees Fahrenheit.

The remaining organic emissions are composed largely of compounds emitted from combustion sources in a condensed phase. These compounds can almost exclusively be classed into a group known as polycyclic organic matter (POM), and a subset of compounds called polynuclear aromatic hydrocarbons (PNA or PAH).

Trace Metals-

Trace metals are also emitted during lignite combustion. The quantity of any given metal emitted, in general, depends on:

- the physical and chemical properties of the metal itself;
- the concentration of the metal in the lignite;
- the combustion conditions; and
- the type of particulate control device used, and its collection efficiency as a function of particle size.

Acid Gases-

In addition to SO_x and NO_x emissions, combustion of lignite also results in emissions of chlorine and fluorine, primarily in the form of hydrogen chloride (HCl) and hydrogen fluoride (HF). Lesser amounts of chlorine gas and fluorine gas are also emitted. A portion of the chlorine and fluorine in the fuel may be absorbed onto fly ash or bottom ash. Both HCl and HF are water soluble and are readily controlled by acid gas scrubbing systems.

1.7.4 Controls[2-4,6-13]

Particulate Matter -

The primary PM control systems for lignite-fired utility boilers are electrostatic precipitators (ESPs) and fabric filters (baghouses) with collection efficiencies as high as 99.5 percent. Older and smaller ESPs can have lower collection efficiencies of approximately 95 percent for total PM.

Multiple cyclone collectors and scrubbers are typically used alone, or in series, with an ESP or baghouse on small industrial stoker boilers and normally achieve 60 to 80 percent collection efficiency for total PM.

Sulfur Oxides[14] -

Flue gas desulfurization (FGD) systems are in current operation on several lignite-fired utility boilers. Flue gases can be treated through wet, semi-dry, or dry desulfurization processes of either the throwaway type (in which all waste streams are discarded) or the recovery (regenerable) type (in which the SO_x absorbent is regenerated and reused). To date, wet systems are the most commonly applied. Wet systems generally use alkali slurries as the SO_x absorbent medium and can be designed to remove in excess of 90 percent of the incoming SO_x. Lime/limestone scrubbers, sodium scrubbers, spray drying, and dual alkali scrubbing are among the commercially proven FGD techniques.

Spray drying is a dry scrubbing approach in which a solution or slurry of alkaline material is sprayed into a reaction vessel as a fine mist and mixes with the flue gas. The SO_2 reacts with the alkali solution or slurry to form liquid-phase salts. The slurry is dried by the latent heat of the flue gas to about 1 percent free moisture. The dried alkali continues to react with SO_2 in the flue gas to form sulfite and sulfate salts. The spray dryer solids are entrained in the flue gas and carried out of the dryer to a particulate control device such as an ESP or baghouse.

Limestone may also be injected into the furnace, typically in an FBC, to react with sulfur dioxide (SO_2) and form calcium sulfate. An FBC is composed of a bed of inert material that is suspended or "fluidized" by a stream of air. Lignite is injected into this bed and burned. Limestone is also injected into this bed where it is calcined to lime and reacts with SO_2 to form calcium sulfate. Particulate matter emitted from the boiler is generally captured in a cyclone and recirculated or sent to disposal. Additional PM control equipment, such as an ESP or baghouse, is used after the cyclone to further reduce particulate emissions.

Nitrogen Oxides[21] -

The most common NO_x control technique for lignite-fired boilers is overfire air (OFA) which involves diverting a portion of the total combustion air (5 to 20 percent) from the burners and injecting it through dedicated air ports above the top level of burners. OFA can be applied to tangential-fired, wall-fired, and stoker boilers; however, it cannot be used on cyclone boilers or other slag-tapping furnaces because it can alter the heat release profile of the boiler which can change the slagging characteristics of the boiler. Depending on the design of the existing furnace, OFA can be a retrofit technology that may achieve 20 to 30 percent NO_x reduction from uncontrolled levels. It is a typical NO_x control technique used in new Subpart D and Subpart Da boilers.

Another NO_x control technique used on lignite-fired boilers is low NO_x burners (LNB) which limit NO_x formation by controlling both the stoichiometric and temperature profiles of the combustion process. LNBs can be retrofit in existing tangential- and wall-fired boilers or installed in new boilers; however, they are not applicable to cyclone boilers since the fuel is fired in cylindrical chambers in the cyclone boiler rather than with conventional burners. Depending on boiler design and the desired NO_x level, OFA and LNB can be applied separately, or in combination, to achieve as much as 50-60 percent reduction from uncontrolled levels.

1.7.5 Emission Factors

Uncontrolled emission factors for SO_x, NO_x, CO, and CO_2 are presented in Table 1.7-1. Controlled emission factors for SO_x are presented in Table 1.7-2 and for NO_x and CO in Table 1.7-3.

Table 1.7-4 presents uncontrolled emission factors for PM and N_2O, and controlled emission factors for PM are shown in Table 1.7-5. Cumulative particle size distributions and particle size-specific emission factors are provided in Tables 1.7-6 and 1.7-7. In addition, particle size-specific emission factors are presented graphically in Figures 1.7-1 and 1.7-2.

Tables 1.7-8 through 1.7-10 present emission factors for polynuclear organic matter (POM), polynuclear aromatic hydrocarbons (PAH), and various organic compounds, respectively. Table 1.7-14 presents emission factors for hydrogen chloride and hydrogen fluoride.

Table 1.7-11 presents emission factor equations that may be used to estimate controlled and uncontrolled emissions of nine trace metals. Table 1.7-12 presents uncontrolled emission factors for trace metals, and Table 1.7-13 presents controlled emission factors. The emission factor equations are based on statistical correlations among measured trace element concentrations in coal, measured fractions of ash in coal, and measured particulate emissions. Because these are the major parameters affecting trace metals emissions, it is recommended that the emission factor equations be used to estimate uncontrolled and controlled emissions when the inputs to the equations are available. If the inputs to the emission factor equations are not available for a pollutant and there is an emission factor in Table 1.7-12 or Table 1.7-13, then the emission factor(s) could be used to estimate emissions.

Tables in this section present emission factors on both a weight basis (lb/ton) and an energy basis (lb/10^{12}Btu). Emission factors in units of lb/ton can be converted to units of lb/MMBtu by multiplying the emission factor by 0.077, assuming a heating value for lignite of 6500 Btu/lb.

1.7.6 Updates Since the Fifth Edition

The Fifth Edition was released in January 1995. Revisions to this section since that date are summarized below. For further detail, consult the memoranda describing each supplement or the background report for this section. These and other documents can be found on the CHIEF electronic bulletin board (919-541-5742), or on the new EFIG home page (http://www.epa.gov/oar/oaqps/efig/).

Supplement A, February 1996

- In the table for SO_x emission factors, the footnote "f" was moved into the header of the SO_x column, and "other stoker" was clarified as a traveling grate (overfeed) stoke. Text was added to the same table to clarify that "S" is a weight percent and not a fraction.

- In the tables for PM factors, text was added to the footnotes to clarify that "A" is a weight percent and not a fraction.

Supplement B, October 1996

- Text was enhanced concerning lignite coal characteristics.

- Text was updated and enhanced concerning firing practices, emissions, and controls.

- The SO_x emission factor was updated and a CO_2 emission factor was added for all categories.

- The table containing NO_x and CO factors from controlled sources was revised to present data by appropriate categories.

- New factors for controlled SO_x were added.
- All POM factors were revised.
- New tables were added with new HAP emission factors.
- References were editorially corrected.

Table 1.7-1. EMISSION FACTORS FOR SO_x, NO_x, CO, AND CO_2 FROM UNCONTROLLED LIGNITE COMBUSTION[a]

EMISSION FACTOR RATING: C (except as noted)

Firing Configuration	SO_x Emission Factor[b] (lb/ton)	NO_x Emission Factor[c] (lb/ton)	CO Emission Factor[d] (lb/ton)	CO_2 Emission Factor[e] (lb/ton)
Pulverized coal, dry bottom, tangential (SCC 1-01-003-02)	30S	7.3	ND	72.6C
Pulverized coal, dry bottom, wall-fired (SCC 1-01-003-01)	30S	11.1	0.25	72.6C
Cyclone (SCC 1-01-003-03)	30S	12.5	ND	72.6C
Spreader stoker (SCC 1-01-003-06)	30S	5.8	ND	72.6C
Traveling Grate Overfeed stoker (SCC 1-01-003-04)	30S	ND	ND	72.6C
Atmospheric fluidized bed (SCC 1-01-003-17/18)	10S[f]	3.6	0.15[g]	72.6C

[a] To convert from lb/ton to kg/Mg, multiply by 0.5. SCC = Source Classification Code. ND = no data.

[b] Reference 2. S = Weight % sulfur content of lignite, wet basis. For example, if the sulfur content equals 3.4%, then S = 3.4. For high sodium ash (Na_2O > 8%), use 22S. For low sodium ash (Na_2O < 2%), use 34S. If ash sodium content is unknown, use 30S.

[c] References 2-3, 8-9, 22-23.

[d] References 8, 23.

[e] EMISSION FACTOR RATING: B. C = Weight % carbon of lignite, as-fired basis. For example, if carbon content equals 63%, then C = 63. If the %C value is not known, a default CO_2 emission value of 4600 lb/ton may be used.

[f] EMISSION FACTOR RATING: D

[g] Emission factor is for circulating fluidized bed only SCC = 1-01-003-18.

Table 1.7-2. EMISSION FACTORS FOR SO_x FROM CONTROLLED LIGNITE COMBUSTION[a]

EMISSIONS FACTOR RATING: D (except as noted)

Firing Configuration	Control Device	Emission Factor (lb/ton)
Subpart D boilers:[b]		
Pulverized coal (SCC 1-01-003-01/-02)	Spray dryer	7.3S
Pulverized coal (SCC 1-01-003-01/-02)	Wet scrubber	16.8S[c]
Subpart Da boilers:[b]		
Pulverized coal (SCC 1-01-003-01/-02)	Spray dryer	7.9S
Pulverized coal (SCC 1-01-003-01/-02)	Wet scrubber	3.7S[c]

[a] References 22-23. S = weight % sulfur content of lignite, wet basis. To convert from lb/ton to kg/Mg, multiply by 0.5. SCC = Source Classification Code.

[b] Subpart D boilers are boilers constructed after August 17, 1971 and with a heat input rate greater than 250 million Btu per hour (MMBtu/hr). Subpart Da boilers are boilers constructed after September 18, 1978 and with a heat input rate greater than 250 MMBtu/hr.

[c] EMISSION FACTOR RATING: C

Table 1.7-3. EMISSION FACTORS FOR NO_x AND CO FROM CONTROLLED LIGNITE COMBUSTION[a]

Firing Configuration	Control Device	NO_x[b]		CO[c]	
		Emission Factor (lb/ton)	EMISSION FACTOR RATING	Emission Factor (lb/ton)	EMISSION FACTOR RATING
Subpart D boilers:[d]					
Pulverized coal, tangential-fired (SCC 1-01-003-02)	Overfire Air	6.8	C	ND	NA
Pulverized coal, wall-fired (SCC 1-01-003-01)	Overfire air and low NO_x burners	4.6	C	0.48	D
Subpart Da boilers:[d]					
Pulverized coal, tangential-fired (SCC 1-01-003-02)	Overfire Air	6.0	C	0.1	D

[a] To convert from lb/ton to kg/Mg, multiply by 0.5. SCC = Source Classification Code. ND = no data. NA = not applicable.
[b] References 22-23.
[c] Reference 22.
[d] Subpart D boilers are boilers constructed after August 17, 1971 and with a heat input rate greater than 250 million Btu per hour (MMBtu/hr). Subpart Da boilers are boilers constructed after September 18, 1978 and with a heat input rate greater than 250 MMBtu/hr.

Table 1.7-4. EMISSION FACTORS FOR PM AND N_2O FROM UNCONTROLLED LIGNITE COMBUSTION[a]

EMISSION FACTOR RATING: E (except as noted)

Firing Configuration	PM Emission Factor[b] (lb/ton)	N_2O Emission Factor[c] (lb/ton)
Pulverized coal, dry bottom, tangential (SCC 1-01-003-02)	6.5A	ND
Pulverized coal, dry bottom, wall fired (SCC 1-01-003-01)	5.1A	ND
Cyclone (SCC 1-01-003-03)	6.7A[d]	ND
Spreader stoker (SCC 1-01-003-06)	8.0A	ND
Other stoker (SCC 1-01-003-04)	3.4A	ND
FBC, Circulating bed (SCC 1-01-003-18)	ND	2.5

[a] To convert from lb/ton to kg/Mg, multiply by 0.5. SCC = Source Classification Code. ND = no data.
[b] References 6-7, 24-25. A = weight % ash content of lignite, wet basis. For example, if the ash content is 5%, then A = 5.
[c] Reference 26.
[d] EMISSION FACTOR RATING: C

Table 1.7-5. EMISSION FACTORS FOR PM EMISSIONS FROM CONTROLLED LIGNITE COMBUSTION[a]

EMISSION FACTOR RATING: C (except as noted)

Firing Configuration	Control Device	PM Emission Factor (lb/ton)
Subpart D Boilers[b] (SCC 1-01-003-01/-02)	Baghouse Wet scrubber	0.08A 0.05A
Subpart Da Boilers[b] (SCC 1-01-003-01/-02)	Wet scrubber	0.01A
FBC, Circulating bed and bubbling bed (SCC 1-01-003-17/18)[b,c]	Limestone addition	0.07A

[a] References 22-23. A = weight % ash content of lignite, wet basis. For example, if lignite is 2.3% ash, then A = 2.3. To convert from lb/ton to kg/Mg, multiply by 0.5. SCC = Source Classification Code.
[b] Subpart D boilers are boilers constructed before August 17, 1971, and with a heat input rate greater than 250 million Btu per hour (MMBtu/hr). Subpart Da boilers are boilers constructed after September 18, 1978, and with a heat input rate greater than 250 MMBtu/hr.
[c] EMISSION FACTOR RATING. D.

Table 1.7-6. CUMULATIVE PARTICLE SIZE DISTRIBUTION AND SIZE-SPECIFIC EMISSION FACTORS FOR BOILERS FIRING PULVERIZED LIGNITE[a]

EMISSION FACTOR RATING: E

Particle Size[b] (μm)	Cumulative Mass % ≤ Stated Size		Cumulative Emission Factor[c] (lb/ton)	
	Uncontrolled	Multiple Cyclone Controlled	Uncontrolled	Multiple Cyclone Controlled[d]
15	51	77	3.4A	1.0A
10	35	67	2.3A	0.88A
6	26	57	1.7A	0.75A
2.5	10	27	0.66A	0.36A
1.25	7	16	0.47A	0.21A
1.00	6	14	0.40A	0.19A
0.625	3	8	0.19A	0.11A
TOTAL			6.6A	1.3A

[a] Reference 27. Based on tangential-fired units (Source Classification Code 1-01-003-02). For wall-fired units (Source Classification Code 1-01-003-01), multiply emission factors in the table by 0.79.
[b] Expressed as aerodynamic equivalent diameter.
[c] A = weight % ash content of lignite, wet basis. For example, if lignite is 3.4% ash, then A = 3.4. To convert from lb/ton to kg/Mg, multiply by 0.5.
[d] Estimated control efficiency for multiple cyclone is 80%, averaged over all particle sizes.

Table 1.7-7. CUMULATIVE PARTICLE SIZE DISTRIBUTION AND SIZE-SPECIFIC EMISSION FACTORS FOR LIGNITE-FIRED SPREADER STOKERS[a]

EMISSION FACTOR RATING: E

Particle Size[b] (μm)	Cumulative Mass % ≤ Stated Size		Cumulative Emission Factor[c] (lb/ton)	
	Uncontrolled	Multiple Cyclone Controlled	Uncontrolled	Multiple Cyclone Controlled[d]
15	28	55	2.2A	0.88A
10	20	41	1.6A	0.66A
6	14	31	1.1A	0.50A
2.5	7	26	0.56A	0.42A
1.25	5	23	0.40A	0.37A
1.00	5	22	0.40A	0.35A
0.625	4	—[e]	0.33A	—[e]
TOTAL			8.0A	1.6A

[a] Reference 27. Source Classification Code 1-01-003-06.
[b] Expressed as aerodynamic equivalent diameter.
[c] A = weight % ash content of lignite, wet basis. For example, if the lignite is 5% ash, then A = 5. To convert from lb/ton to kg/Mg, multiply by 0.5.
[d] Estimated control efficiency for multiple cyclone is 80%.
[e] Insufficient data.

Table 1.7-8. EMISSION FACTORS FOR POM FROM CONTROLLED LIGNITE COMBUSTION[a]

EMISSION FACTOR RATING: E

Firing Configuration	Control Device	Emission Factor ($lb/10^{12}$ Btu)
		POM
Pulverized coal (SCC 1-01-003-01)	High efficiency cold-side ESP	2.3
Pulverized dry bottom (no SCC)	Multi-cyclones	1.8 - 18[b]
	ESP	2.6[b]
Cyclone furnace (SCC 1-01-003-03)	ESP	0.11[c] - 1.6[b]
Spreader stoker (SCC 1-01-003-06)	Multi-cyclones	15[c]

[a] References 28-29. To convert from $lb/10^{12}$ Btu to pg/J, multiply by 0.43. SCC = Source Classification Code. ND = no data.
[b] Primarily trimethyl propenyl naphthalene.
[c] Primarily biphenyl.

Table 1.7-9 EMISSION FACTORS FOR POLYNUCLEAR AROMATIC HYDROCARBONS (PAH) FROM CONTROLLED COAL COMBUSTION[a]

Pollutant	Emission Factor[b] (lb/ton)	EMISSION FACTOR RATING
Biphenyl	1.7E-06	D
Acenaphthene	5.1E-07	B
Acenaphthylene	2.5E-07	B
Anthracene	2.1E-07	B
Benzo(a)anthracene	8.0E-08	B
Benzo(a)pyrene	3.8E-08	D
Benzo(b,j,k)fluoranthene	1.1E-07	B
Benzo(g,h,i)perylene	2.7E-08	D
Chrysene	1.0E-07	C
Fluoranthene	7.1E-07	B
Fluorene	9.1E-07	B
Indeno(1,2,3-cd)pyrene	6.1E-08	C
Naphthalene	1.3E-05	C
Phenanthrene	2.7E-06	B
Pyrene	3.3E-07	B
5-Methyl chrysene	2.2E-08	D

[a] References 30-40. Factors were developed from emissions data from six sites firing bituminous coal, four sites firing subbituminous coal, and from one site firing lignite. Factors apply to boilers utilizing both wet limestone scrubbers or spray dryers with an electrostatic precipitator (ESP) or fabric filter (FF). The factors also apply to boilers utilizing only an ESP or FF. SCCs = pulverized coal-fired boilers, 1-01-003-01, 1-02-003-01, 1-03-003-05; pulverized coal tangentially-fired boilers, 1-01-003-02, 1-02-003-02, 1-03-003-06; and cyclone boilers, 1-01-003-03, and 1-02-003-03.

[b] Emission factor should be applied to coal feed, as fired. To convert from lb/ton to kg/Mg, multiply by 0.5. Emissions are lb of pollutant per ton of coal combusted.

Table 1.7-10 EMISSION FACTORS FOR VARIOUS ORGANIC COMPOUNDS FROM CONTROLLED COAL COMBUSTION[a]

Pollutant[b]	Emission Factor[c] (lb/ton)	EMISSION FACTOR RATING
Acetaldehyde	5.7E-04	C
Acetophenone	1.5E-05	D
Acrolein	2.9E-04	D
Benzene	1.3E-03	A
Benzyl chloride	7.0E-04	D
Bis(2-ethylhexyl)phthalate (DEHP)	7.3E-05	D
Bromoform	3.9E-05	E
Carbon disulfide	1.3E-04	D
2-Chloroacetophenone	7.0E-06	E
Chlorobenzene	2.2E-05	D
Chloroform	5.9E-05	D
Cumene	5.3E-06	E
Cyanide	2.5E-03	D
2,4-Dinitrotoluene	2.8E-07	D
Dimethyl sulfate	4.8E-05	E
Ethyl benzene	9.4E-05	D
Ethyl chloride	4.2E-05	D
Ethylene dichloride	4.0E-05	E
Ethylene dibromide	1.2E-06	E
Formaldehyde	2.4E-04	A
Hexane	6.7E-05	D
Isophorone	5.8E-04	D
Methyl bromide	1.6E-04	D
Methyl chloride	5.3E-04	D
Methyl ethyl ketone	3.9E-04	D
Methyl hydrazine	1.7E-04	E
Methyl methacrylate	2.0E-05	E
Methyl tert butyl ether	3.5E-05	E
Methylene chloride	2.9E-04	D

Table 1.7-10 (continued)

Pollutant[b]	Emission Factor[c] (lb/ton)	EMISSION FACTOR RATING
Phenol	1.6E-05	D
Propionaldehyde	3.8E-04	D
Tetrachloroethylene	4.3E-05	D
Toluene	2.4E-04	A
1,1,1-Trichloroethane	2.0E-05	E
Styrene	2.5E-05	D
Xylenes	3.7E-05	C
Vinyl acetate	7.6E-06	E

[a] References 30-48. Factors were developed from emissions data from ten sites firing bituminous coal, eight sites firing subbituminous coal, and from one site firing lignite. The emission factors are applicable to boilers using both wet limestone scrubbers or spray dryers and an electrostatic precipitator (ESP) or fabric filter (FF). In addition, the factors apply to boilers utilizing only an ESP or FF. SCCs = pulverized coal-fired boilers, 1-01-003-01, 1-02-003-01, 1-03-003-05; pulverized coal tangentially-fired boilers, 1-01-003-02, 1-02-003-02, 1-03-003-06; cyclone boilers, 1-01-003-03, 1-02-003-03; and atmospheric fluidized bed combustor, circulating bed, 1-01-003-18. This table is similar to Table 1.1-13 and is reproduced here for the convenience of the reader.

[b] Pollutants sampled for but not detected in any sampling run include: Carbon tetrachloride- 2 sites; 1,3-Dichloropropylene- 2 sites; N-nitrosodimethylamine- 2 sites; Ethylidene dichloride- 2 sites; Hexachlorobutadiene- 1 site; Hexachloroethane- 1 site; Propylene dichloride- 2 sites; 1,1,2,2-Tetrachloroethane- 2 sites; 1,1,2-Trichloroethane- 2 sites; Vinyl chloride- 2 sites; and, Hexachlorobenzene- 2 sites.

[c] Emission factor should be applied to coal feed, as fired. To convert from lb/ton to kg/Mg, multiply by 0.5.

Table 1.7-11. TRACE METAL EMISSION FACTOR EQUATIONS FOR FROM COAL COMBUSTION[a]

EMISSION FACTOR EQUATION RATING: A[b]

Pollutant	Emission Factor Equation ($lb/10^{12}$ Btu)[c]
Antimony	$0.92 * (C/A * PM)^{0.63}$
Arsenic	$3.1 * (C/A * PM)^{0.85}$
Beryllium	$1.2 * (C/A * PM)^{1.1}$
Cadmium	$3.3 * (C/A * PM)^{0.5}$
Chromium	$3.7 * (C/A * PM)^{0.58}$
Cobalt	$1.7 * (C/A * PM)^{0.69}$
Lead	$3.4 * (C/A * PM)^{0.80}$
Manganese	$3.8 * (C/A * PM)^{0.60}$
Nickel	$4.4 * (C/A * PM)^{0.48}$

[a] Reference 49. The equations were developed from emissions data from bituminous coal combustion, subbituminous coal combustion, and from lignite combustion. The equations should be used to generate factors for controlled boilers when the necessary input information is available. The emission factor equations are applicable to all typical firing configurations and PM controls for electric generation (utility), industrial, and commercial/industrial boilers firing bituminous coal, subbituminous coal, or lignite. Thus, all SCCs for these boilers are assigned to the equations.

[b] AP-42 criteria for rating emission factors were used to rate the equations.

[c] The factors produced by the equations should be applied to heat input. To convert from $lb/10^{12}$ Btu to kg/joules multiply by 4.31×10^{-16}.

C = concentration of metal in the coal, parts per million by weight (ppmwt).

A = weight fraction of ash in the coal. For example, 10% ash is 0.1 ash fraction.

PM = Site-specific emission factor for total particulate matter, $lb/10^6$ Btu.

Table 1.7-12. EMISSION FACTORS FOR TRACE ELEMENTS FROM UNCONTROLLED LIGNITE COMBUSTION[a]

EMISSION FACTOR RATING: E

Firing Configuration	Emission Factor ($lb/10^{12}Btu$)						
	As	Be	Cd	Cr	Mn	Hg	Ni
Pulverized, wet bottom (no SCC)	2730	131	49 - 77	1220 - 1880	4410 - 16,250	21	154 - 1160
Pulverized, dry bottom (no SCC)	1390	131	49	1500 - 1880	16,200	21	928 - 1160
Cyclone furnace (SCC 1-01-003-03)	235 - 632	131	31	253 - 1880	3,760	21	157 - 1160
Stoker configuration unknown (no SCC)	ND	118	ND	ND	11,800	21	ND
Spreader stoker (SCC 1-01-003-06)	538 - 1100	ND	23 - 47	1130 - 1880	ND	ND	696 - 1160
Traveling grate (overfed) stoker (SCC 1-01-003-04)	1100 - 2100	ND	47 - 90	ND	ND	ND	ND

[a] References 28-29. To convert from $lb/10^{12}$ Btu to pg/J, multiply by 0.43. SCC = Source Classification Code. ND = no data.

Table 1.7-13 EMISSION FACTORS FOR TRACE METALS FROM CONTROLLED COAL COMBUSTION[a]

Pollutant	Emission Factor (lb/ton)[b]	EMISSION FACTOR RATING
Antimony	1.8E-05	A
Arsenic	4.1E-04	A
Beryllium	2.1E-05	A
Cadmium	5.1E-05	A
Chromium	2.6E-04	A
Chromium (VI)	7.9E-05	D
Cobalt	1.0E-04	A
Lead	4.2E-04	A
Magnesium	1.1E-02	A
Manganese	4.9E-04	A
Mercury	8.3E-05	A
Nickel	2.8E-04	A
Selenium	1.3E-03	A

[a] References 30-48, 50-58. The emission factors were developed from emissions data at eleven facilities firing bituminous coal, fifteen facilities firing subbituminous coal, and from two facilities firing lignite. The factors apply to boilers utilizing either venturi scrubbers, spray dryer absorbers, or wet limestone scrubbers with an electrostatic precipitator (ESP) or Fabric Filter (FF). In addition, the factors apply to boilers using only an ESP, FF, or venturi scrubber. SCCs = pulverized coal-fired boilers, 1-01-003-01, 1-02-003-01, 1-03-003-05; pulverized coal tangentially-fired boilers, 1-01-003-02, 1-02-003-02, 1-03-003-06; cyclone boilers, 1-01-003-03, 1-02-003-03; and atmospheric fluidized bed combustor, circulating bed, 1-01-003-18.

[b] Emission factor should be applied to coal feed, as fired. To convert from lb/ton to kg/Mg, multiply by 0.5.

Table 1.7-14. EMISSION FACTORS FOR HYDROGEN CHLORIDE (HCl) AND HYDROGEN FLUORIDE (HF) FROM COAL COMBUSTION[a]

EMISSION FACTOR RATING: B

Firing Configuration	SCC	HCl Emission Factor (lb/ton)	HF Emission Factor (lb/ton)
PC-fired	1-01-003-01 1-02-003-01 1-03-003-05	1.2	0.15
PC-fired, tangential	1-01-003-02 1-02-003-02 1-03-003-06	1.2	0.15
Cyclone Furnace	1-01-003-03 1-02-003-03	1.2	0.15
Traveling Grate (overfeed stoker)	1-01-003-04 1-02-003-04 1-03-003-07	1.2	0.15
Spreader Stoker	1-01-003-06 1-02-003-06 1-03-003-09	1.2	0.15
FBC, Circulating Bed	1-01-003-18	1.2	0.15

[a] Reference 59. The emission factors were developed from bituminous coal, subbituminous coal, and lignite emissions data. To convert from lb/ton to kg/Mg, multiply by 0.5. The factors apply to both controlled and uncontrolled sources.

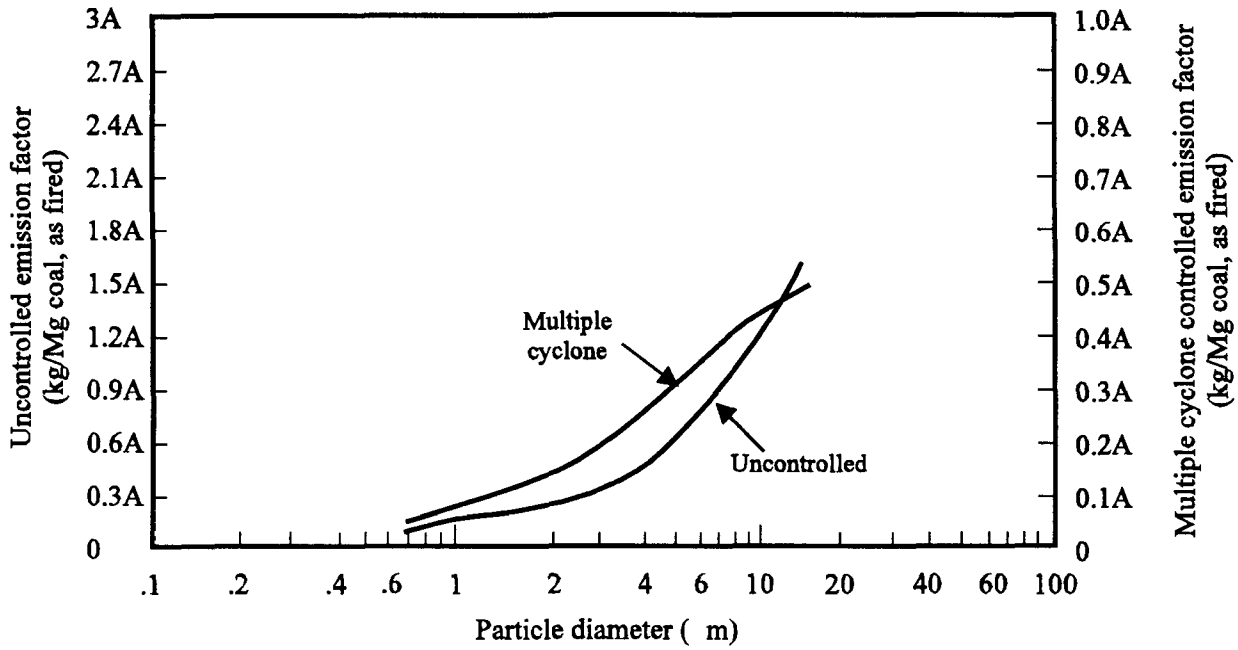

Figure 1.7-1. Cumulative size-specific emission factors for boilers firing pulverized lignite.

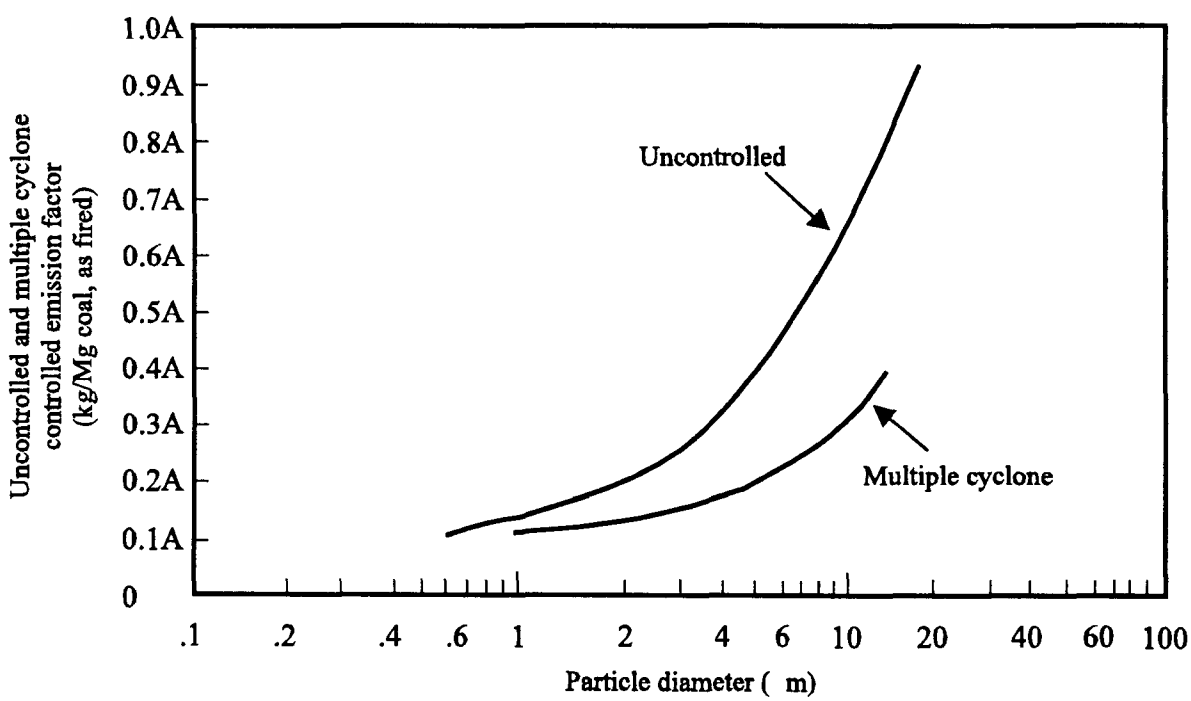

Figure 1.7-2. Cumulative size-specific emission factors for lignite-fired spreader stokers.

References For Section 1.7

1. *Kirk-Othmer Encyclopedia Of Chemical Technology, Second Edition, Volume 12*, John Wiley and Sons, New York, NY, 1967.

2. G. H. Gronhovd, *et al.*, "Some Studies on Stack Emissions from Lignite Fired Powerplants", Presented at the 1973 Lignite Symposium, Grand Forks, ND, May 1973.

3. *Standards Support And Environmental Impact Statement: Promulgated Standards Of Performance For Lignite Fired Steam Generators: Volumes I And II*, EPA-450/2-76-030a and 030b, U. S. Environmental Protection Agency, Research Triangle Park, NC, December 1976.

4. *1965 Keystone Coal Buyers Manual*, McGraw-Hill, Inc., New York, NY, 1965.

5. B. Bartok and A. F. Sarofim (eds.), *Fossil Fuel Combustion, A Source Book*, John Wiley and Sons, Inc., 1991, p.239

6. *Source Test Data On Lignite-Fired Power Plants*, North Dakota State Department of Health, Bismarck, ND, December 1973.

7. G. H. Gronhovd, *et al.*, "Comparison Of Ash Fouling Tendencies Of High And Low Sodium Lignite From A North Dakota Mine", Proceedings of the American Power Conference, Volume XXVIII, 1966.

8. A. R. Crawford, *et al., Field Testing: Application Of Combustion Modification To Control NO_x Emissions From Utility Boilers*, EPA-650/2-74-066, U. S. Environmental Protection Agency, Washington, DC, June 1974.

9. *Nitrogen Oxides Emission Measurements For Three Lignite Fired Power Plants, Contract No. 68-02-1401 And 68-02-1404*, Office Of Air Quality Planning And Standards, U. S. Environmental Protection Agency, Research Triangle Park, NC, 1974.

10. *Coal Fired Power Plant Trace Element Study, A Three Station Comparison*, U. S. Environmental Protection Agency, Denver, CO, September 1975.

11. C. Castaldini, and M. Angwin, *Boiler Design And Operating Variables Affecting Uncontrolled Sulfur Emissions From Pulverized Coal Fired Steam Generators*, EPA-450/3-77-047, U. S. Environmental Protection Agency, Research Triangle Park, NC, December 1977.

12. C. C. Shih, *et al., Emissions Assessment Of Conventional Stationary Combustion Systems, Volume III: External Combustion Sources For Electricity Generation*, EPA Contract No. 68-02-2197, TRW Inc., Redondo Beach, CA, November 1980.

13. Honea, *et al.*, "The Effects Of Overfire Air And Low Excess Air On NO_x Emissions And Ash Fouling Potential For A Lignite-Fired Boiler", Proceedings of the American Power Conference, Volume 40, 1978.

14. *Emission Factor Documentation For AP-42 Section 1.7, Lignite Combustion*, prepared by Acurex Environmental Corp., Edward Aul & Associates, Inc., and E. H. Pechan & Associates, Inc., EPA Contract No. 68-DO-0120, April 1993.

15. L. P. Nelson, et al., *Global Combustion Sources Of Nitrous Oxide Emissions*, Research Project 2333-4 Interim Report, Sacramento: Radian Corporation, 1991.

16. R. L. Peer, et al., *Characterization Of Nitrous Oxide Emission Sources*, Prepared for the US EPA Contract 68-D1-0031, Research Triangle Park, NC: Radian Corporation, 1995.

17. S. D. Piccot, et al., *Emissions And Cost Estimates For Globally Significant Anthropogenic Combustion Sources Of NO_x, N_2O, CH_4, CO, And CO_2*, EPA Contract No. 68-02-4288, Research Triangle Park, NC: Radian Corporation, 1990.

18. G. Marland, and R.M. Rotty *Carbon Dioxide Emissions From Fossil Fuels: A Procedure For Estimation And Results For 1951-1981*, DOE/NBB-0036 TR-003, Carbon Dioxide Research Division, Office of Energy Research, U.S. Department of Energy, Oak Ridge, TN, 1983.

19. G. Marland and R. M. Rotty, "Carbon Dioxide Emissions From Fossil Fuels: A Procedure For Estimation And Results for 1950-1982," *Tellus*, 36B: 232-261.

20. *Sector-Specific Issues and Reporting Methodologies Supporting the General Guidelines for the Voluntary Reporting of Greenhouse Gases under Section 1605(b) of the Energy Policy Act of 1992* (1994) DOE/PO-0028, Volume 2 of 3, U.S. Department of Energy.

21. S. Stamey-Hall, Radian Corporation, *Alternative Control Techniques Document—NO_x Emissions From Utility Boilers*, EPA-453/R-94-023, U. S. Environmental Protection Agency, Research Triangle Park, NC, March 1994.

22. *Source Test Data On Lignite-Fired Power Plants*, North Dakota State Department of Health, Bismarck, ND, April 1992.

23. *Source Test Data On Lignite-Fired Power Plants*, Texas Air Control Board, Austin, TX, April 1992.

24. *Source Test Data On Lignite-Fired Cyclone Boilers*, North Dakota State Department of Health, Bismarck, ND, March 1982.

25. Personal communication dated September 18, 1981, Letter from North Dakota Department of Health to Mr. Bill Lamson of the U. S. Environmental Protection Agency, Research Triangle Park, NC, conveying stoker data package.

26. M. D. Mann, *et al.*, "Effect Of Operating Parameters On N_2O Emissions In A 1-MWCFBC," Presented at the 8th Annual Pittsburgh Coal Conference, Pittsburgh, PA, October, 1991.

27. *Inhalable Particulate Source Category Report For External Combustion Sources*, EPA Contract No. 68-02-3156, Acurex Corporation, Mountain View, CA, January 1985.

28. J. C. Evans, *et al.*, *Characterization Of Trace Constituents At Canadian Coal-Fired Plants, Phase I: Final Report And Appendices*, Report for the Canadian Electrical Association, R&D, Montreal, Quebec, Contract Number 001G194.

29. G. W. Brooks, *et al.*, Radian Corporation, *Locating And Estimating Air Emission From Source Of Polycyclic Organic Matter (POM)*, EPA-450/4-84-007p, U. S. Environmental Protection Agency, Research Triangle Park, NC, May 1988.

30. Field Chemical Emissions Monitoring Project: Site 22 Emissions Report. Radian Corporation, Austin, Texas. February, 1994. (EPRI Report)

31. Toxics Assessment Report. Illinois Power Company. Baldwin Power Station- Unit 2. Baldwin, Illinois. Volumes I- Main Report. Roy F. Weston, Inc. West Chester, Pennsylvania. December, 1993.

32. Toxics Assessment Report. Minnesota Power Company Boswell Energy Center- Unit 2. Cohasset, Minnesota. Volume 1- Main Report. Roy F. Weston, Inc. West Chester, Pennsylvania. December, 1993.

33. Field Chemical Emissions Monitoring Project: Site 11 Emissions Monitoring. Radian Corporation, Austin, Texas. October, 1992. (EPRI Report)

34. Field Chemical Emissions Monitoring Project: Site 21 Emissions Monitoring. Radian Corporation, Austin, Texas. August, 1993. (EPRI Report)

35. Field Chemical Emissions Monitoring Project: Site 111 Emissions Report. Radian Corporation, Austin, Texas. May, 1993. (EPRI Report)

36. Field Chemical Emissions Monitoring Project: Site 115 Emissions Report. Radian Corporation, Austin, Texas. November, 1994. (EPRI Report)

37. Draft Final Report. A Study of Toxic Emissions from a Coal-Fired Power Plant-Niles Station No. 2. Volumes One, Two, and Three. Battelle, Columbus, Ohio. December 29, 1993.

38. Final Report. A Study of Toxic Emissions from a Coal-Fired Power Plant Utilizing an ESP/Wet FGD System. Volumes One, Two, and Three. Battelle, Columbus, Ohio. July 1994.

39. Assessment of Toxic Emissions From a Coal Fired Power Plant Utilizing an ESP. Final Report- Revision 1. Energy and Environmental Research Corporation, Irvine, California. December 23, 1993.

40. 500-MW Demonstration of Advanced Wall-Fired Combustion Techniques for the Reduction of Nitrogen Oxide (NOx) Emissions from Coal-Fired Boilers. Radian Corporation, Austin, Texas.

41. Results of the November 7, 1991 Air Toxic Emission Study on the Nos. 3, 4, 5 & 6 Boilers at the NSP High Bridge Plant. Interpoll Laboratories, Inc., Circle Pines, Minnesota. January 3, 1992.

42. Results of the December 1991 Air Toxic Emission Study on Units 6 & 7 at the NSP Riverside Plant. Interpoll Laboratories, Inc., Circle Pines, Minnesota. February 28, 1992.

43. Field Chemical Emissions Monitoring Project: Site 10 Emissions Monitoring. Radian Corporation, Austin, Texas. October, 1992.

44. Field Chemical Emissions Monitoring Project: Site 12 Emissions Monitoring. Radian Corporation, Austin, Texas. November, 1992.

45. Field Chemical Emissions Monitoring Project: Site 15 Emissions Monitoring. Radian Corporation, Austin, Texas. October, 1992.

46. Field Chemical Emissions Monitoring Project: Site 101 Emissions Report. Radian Corporation, Austin, Texas. October, 1994.

47. Field Chemical Emissions Monitoring Project: Site 114 Report. Radian Corporation, Austin, Texas. May, 1994.

48. Field Chemical Emissions Monitoring Report: Site 122. Final Report, Task 1 Third Draft. EPRI RP9028-10. Southern Research Institute, Birmingham, Alabama. May, 1995.

49. *Electric Utility Trace Substances Synthesis Report, Volume I*, Report TR-104614, Electric Power Research Institute, Palo Alto, California, November 1994.

50. Results of the September 10 and 11, 1991 Mercury Removal Tests on the Units 1 & 2, and Unit 3 Scrubber Systems at the NSP Sherco Plant in Becker, Minnesota. Interpoll Laboratories, Inc., Circle Pines, Minnesota. October 30, 1991.

51. Results of the November 5, 1991 Air Toxic Emission Study on the No. 1, 3 & 4 Boilers at the NSP Black Dog Plant. Interpoll Laboratories, Inc., Circle Pines, Minnesota. January 3, 1992.

52. Results of the January 1992 Air Toxic Emission Study on the No. 2 Boiler at the NSP Black Dog Plant. Interpoll Laboratories, Inc., Circle Pines, Minnesota. May 4, 1992.

53. Results of the May 29, 1990 Trace Metal Characterization Study on Units 1 and 2 at the Sherburne County Generating Station in Becker, Minnesota. Interpoll Laboratories, Inc., Circle Pines, Minnesota. July, 1990.

54. Results of the May 1, 1990 Trace Metal Characterization Study on Units 1 and 2 at the Sherburne County Generating Station. Interpoll Laboratories, Inc., Circle Pines, Minnesota. July 18, 1990.

55. Results of the March 1990 Trace Metal Characterization Study on Unit 3 at the Sherburne County Generating Station. Interpoll Laboratories, Circle Pines, Minnesota. June 7, 1990.

56. Field Chemical Emissions Monitoring Project: Site 19 Emissions Monitoring. Radian Corporation, Austin, Texas. April, 1993. (EPRI Report)

57. Field Chemical Emissions Monitoring Project: Site 20 Emissions Monitoring. Radian Corporation, Austin, Texas. March, 1994. (EPRI Report)

58. Characterizing Toxic Emissions from a Coal-Fired Power Plant Demonstrating the AFGD ICCT Project and a Plant Utilizing a Dry Scrubber/Baghhouse System. Final Draft Report. Springerville Generating Station Unit No. 2. Southern Research Institute, Birmingham, Alabama. December, 1993.

59. *Hydrogen Chloride And Hydrogen Fluoride Emission Factors For The NAPAP Inventory*, EPA-600/7-85-041, U. S. Environmental Protection Agency, October 1985.

1.8 Bagasse Combustion In Sugar Mills

1.8.1 Process Description[1-5]

Bagasse is the matted cellulose fiber residue from sugar cane that has been processed in a sugar mill. Previously, bagasse was burned as a means of solid waste disposal. However, as the cost of fuel oil, natural gas, and electricity has increased, bagasse has come to be regarded as a fuel rather than refuse. Bagasse is a fuel of varying composition, consistency, and heating value. These characteristics depend on the climate, type of soil upon which the cane is grown, variety of cane, harvesting method, amount of cane washing, and the efficiency of the milling plant. In general, bagasse has a heating value between 3,000 and 4,000 British thermal units per pound (Btu/lb) on a wet, as-fired basis. Most bagasse has a moisture content between 45 and 55 percent by weight.

The U. S. sugar cane industry is located in the tropical and subtropical regions of Florida, Texas, Louisiana, Hawaii, and Puerto Rico. Except for Hawaii, where sugar cane production takes place year round, sugar mills operate seasonally from 2 to 5 months per year.

Sugar cane is a large grass with a bamboo-like stalk that grows 8 to 15 feet tall. Only the stalk contains sufficient sucrose for processing into sugar. All other parts of the sugar cane (i. e., leaves, top growth, and roots) are termed "trash". The objective of harvesting is to deliver the sugar cane to the mill with a minimum of trash or other extraneous material. The cane is normally burned in the field to remove a major portion of the trash and to control insects and rodents. (See Section 13.1 for methods to estimate these emissions.) The three most common methods of harvesting are hand cutting, machine cutting, and mechanical raking. The cane that is delivered to a particular sugar mill will vary in trash and dirt content depending on the harvesting method and weather conditions. Inside the mill, cane preparation for extraction usually involves washing the cane to remove trash and dirt, chopping, and then crushing. Juice is extracted in the milling portion of the plant by passing the chopped and crushed cane through a series of grooved rolls. The cane remaining after milling is bagasse.

1.8.2 Firing Practices

Fuel cells, horseshoe boilers, and spreader stoker boilers are used to burn bagasse. Horseshoe boilers and fuel cells differ in the shapes of their furnace area but in other respects are similar in design and operation. In these boilers (most common among older plants), bagasse is gravity-fed through chutes and piles onto a refractory hearth. Primary and overfire combustion air flows through ports in the furnace walls; burning begins on the surface pile. Many of these units have dumping hearths that permit ash removal while the unit is operating.

In more recently built sugar mills, bagasse is burned in spreader stoker boilers. Bagasse fed to these boilers enters the furnace through a fuel chute and is spread pneumatically or mechanically across the furnace, where part of the fuel burns while in suspension. Simultaneously, large pieces of fuel are spread in a thin, even bed on a stationary or moving grate. The flame over the grate radiates heat back to the fuel to aid combustion. The combustion area of the furnace is lined with heat exchange tubes (waterwalls).

1.8.3 Emissions[1-3]

The most significant pollutant emitted by bagasse-fired boilers is particulate matter, caused by the turbulent movement of combustion gases with respect to the burning bagasse and resultant ash. Emissions of sulfur dioxide (SO_2) and nitrogen oxides (NO_x) are lower than conventional fossil fuels due to the characteristically low levels of sulfur and nitrogen associated with bagasse.

Auxiliary fuels (typically fuel oil or natural gas) may be used during startup of the boiler or when the moisture content of the bagasse is too high to support combustion; if fuel oil is used during these periods, SO_2 and NO_x emissions will increase. Soil characteristics such as particle size can affect the magnitude of particulate matter (PM) emissions from the boiler. Cane that is improperly washed or incorrectly prepared can also influence the bagasse ash content. Upsets in combustion conditions can cause increased emissions of carbon monoxide (CO) and unburned organics, typically measured as volatile organic compounds (VOCs) and total organic compounds (TOCs).

1.8.4 Controls

Mechanical collectors and wet scrubbers are commonly used to control particulate emissions from bagasse-fired boilers. Mechanical collectors may be installed in single cyclone, double cyclone, or multiple cyclone (i. e., multiclone) arrangements. The reported PM collection efficiency for mechanical collectors is 20 to 60 percent. Due to the abrasive nature of bagasse fly ash, mechanical collector performance may deteriorate over time due to erosion if the system is not well maintained.

The most widely used wet scrubbers for bagasse-fired boilers are impingement and venturi scrubbers. Impingement scrubbers normally operate at gas-side pressure drops of 5 to 15 inches of water; typical pressure drops for venturi scrubbers are over 15 inches of water. Impingement scrubbers are in greater use due to their lower energy requirements and fewer operating and maintenance problems. Reported PM collection efficiencies for both scrubber types are 90 percent or greater.

Fabric filters and electrostatic precipitators have not been used to a significant extent for controlling PM from bagasse-fired boilers because both are relatively costly compared to other control options. Fabric filters also pose a potential fire hazard.

Gaseous emissions (e. g., SO_2, NO_x, CO, and organics) may also be absorbed to a significant extent in a wet scrubber. Alkali compounds are sometimes utilized in the scrubber to prevent low pH conditions. If carbon dioxide (CO_2)-generating compounds (such as sodium carbonate or calcium carbonate) are used, CO_2 emissions will increase.

Fugitive dust may be generated by truck traffic and cane handling operations at the sugar mill. PM emissions from these sources may be estimated by consulting Section 13.2.

Emission factors and emission factor ratings for bagasse-fired boilers are shown in Table 1.8-1. Table 1.8-1 presents emission factors on a weight basis (lb/ton). To convert to an energy basis (lb/MMBtu), divide by a heating value of 7.0 MMBtu/ton.

1.8.5 Updates Since the Fifth Edition

The Fifth Edition was released in January 1995. Revisions to this section since that date are summarized below. For further detail, consult the memoranda describing each supplement or the

background report for this section. These and other documents can be found on the CHIEF electronic bulletin board (919-541-5742), or on the new EFIG home page (http://www.epa.gov/oar/oaqps/efig/).

Supplement A, February 1996

No changes.

Supplement B, October 1996

- PM emission factors were revised for boilers controlled with wet scrubbers.

Table 1.8-1. EMISSION FACTORS FOR BAGASSE-FIRED BOILERS[a]

Pollutant	Emission Factor (lb/ton)[b]	EMISSION FACTOR RATING
PM[c]		
Uncontrolled[d]	15.6	C
Controlled		
Mechanical collector[e]	8.4	D
Wet scrubber[f]	1.4	A
PM-10		
Controlled		
Wet scrubber[g]	1.36	D
CO_2		
Uncontrolled[h]	1,560	A
NO_x		
Uncontrolled[j]	1.2	C
Polycyclic organic matter		
Uncontrolled[k]	0.001	D

[a] Source Classification Code is 1-02-011-01.
[b] Units are lb of pollutant/ton of wet, as-fired bagasse containing approximately 50% moisture, by weight. If lbs of steam produced is monitored, assume 1 lb of bagasse produces 2 lb of steam, in lieu of any site-specific conversion data. To convert from lb/ton to kg/Mg, multiply by 0.5.
[c] Includes only filterable PM (i. e., that particulate collected on or prior to the filter of an EPA Method 5 [or equivalent] sampling train).
[d] Reference 2.
[e] References 6-7.
[f] References 6,8-65.
[g] Reference 13.
[h] References 6-13,66. CO_2 emissions will increase following a wet scrubber in which CO_2-generating reagents (such as sodium carbonate or calcium carbonate) are used.
[j] References 7,13.
[k] Reference 7. Based on measurements collected downstream of PM control devices which may have provided some removal of polycyclic organic matter condensed on PM.

References For Section 1.8

1. *Potential Control Strategies for Bagasse Fired Boilers*, EPA Contract No. 68-02-0627, Engineering-Science, Inc., Arcadia, CA, May 1978.

2. *Background Document: Bagasse Combustion in Sugar Mills*, EPA-450/3-77-077, U. S. Environmental Protection Agency, Research Triangle Park, NC, January 1977.

3. *Nonfossil Fuel Fired Industrial Boilers — Background Information*, EPA-450/3-82-007, U. S. Environmental Protection Agency, Research Triangle Park, NC, March 1982.

4. *A Technology Assessment of Solar Energy Systems: Direct Combustion of Wood and Other Biomass in Industrial Boilers*, ANL/EES-TM--189, Angonne National Laboratory, Argonne, IL, December 1981.

5. *Emission Factor Documentation for AP-42 Section 1.8 — Bagasse Combustion in Sugar Mills*, Technical Support Division, Office of Air Quality Planning and Standards, U. S. Environmental Protection Agency, Research Triangle Park, NC, April 1993.

6. *Particulate Emissions Test Report: Atlantic Sugar Association*, Air Quality Consultants, Inc., December 20, 1978.

7. *Stationary Source Testing of Bagasse Fired Boilers at the Hawaiian Commercial and Sugar Company: Puunene, Maui, Hawaii*, EPA Contract No. 68-02-1403, Midwest Research Institute, Kansas City, MO, February 1976.

8. *Compliance Stack Test: Gulf and Western Food Products: Report No. 238-S*, South Florida Environmental Services, Inc., February 1980.

9. *Compliance Stack Test: Gulf and Western Food Products: Report No. 221-S*, South Florida Environmental Services, Inc., January 1980.

10. *Compliance Stack Test: United States Sugar Corporation: Report No. 250-S*, South Florida Environmental Services, Inc., February 1980.

11. *Compliance Stack Test: Osceola Farms Company: Report No. 215-S*, South Florida Environmental Services, Inc., December 1979.

12. *Source Emissions Survey of Davies Hamakua Sugar Company: Report No. 79-34*, Mullins Environmental Testing Company, May 1979.

13. *Emission Test Report: U. S. Sugar Company, Bryant Florida*, EPA Contract No. 68-02-2818, Monsanto Research Corporation, Dayton, OH, May 1980.

14. *Source Test Report For Particulate Emissions Twin Impingement Wet Scrubber Number 6 Boiler: Talisman Sugar Corporation,* South Bay, Florida, February 1 and 4, 1991.

15. *Source Test Report For Particulate Emissions Twin Impingement Wet Scrubber Number 5 Boiler: Talisman Sugar Corporation,* South Bay, Florida, February 5, 1991.

16. *Source Test Report For Particulate Emissions Twin Impingement Wet Scrubber Number 4 Boiler: Talisman Sugar Corporation,* South Bay, Florida, February 11, 1991.

17. *Source Test Report For Particulate Emissions Impingement Wet Scrubber Number 3 Boiler: Atlantic Sugar Association,* Belle Glade, Florida, November 27, 1990.

18. *Source Test Report For Particulate Emissions Impingement Wet Scrubber Number 4 Boiler: Atlantic Sugar Association,* Belle Glade, Florida, November 29, 1990.

19. *Source Test Report Number 3 Boiler Impingement Wet Scrubber Particulate Emissions: Sugar Cane Growers Cooperative of Florida,* Belle Glade, Florida, December 6, 1990.

20. *Source Test Report Number 4 Boiler Impingement Wet Scrubber Particulate Emissions: Sugar Cane Growers Cooperative of Florida,* Belle Glade, Florida, December 11, 1990.

21. *Source Test Report For Particulate Emissions Impingement Wet Scrubber Number 5 Boiler: United States Sugar Cane Corporation,* Bryant, Florida, January 13, 1991.

22. *Source Test Report For Particulate Emissions Impingement Wet Scrubber Number 1 Boiler: United States Sugar Corporation,* Bryant, Florida, January 8, 1991.

23. *Source Test Report For Particulate Emissions Impingement Wet Scrubber Number 3 Boiler: United States Sugar Corporation,* Bryant, Florida, January 24, 1991.

24. *Source Test Report Number 5 Boiler Impingement Wet Scrubbers Particulate Emissions: Sugar Cane Growers Cooperative of Florida,* Belle Glade, Florida, December 5, 1990.

25. *Source Test Report Number 8 Boiler Impingement Wet Scrubber Particulate Emissions: Sugar Cane Growers Cooperative of Florida,* Belle Glade, Florida, December 12, 1990.

26. *Source Test Report For Particulate Emissions Twin Impingement Wet Scrubbers Number 1 Boiler: Sugar Cane Growers Cooperative of Florida,* Belle Glade, Florida, November 19, 1990.

27. *Source Test Report For Particulate Emissions Twin Impingement Wet Scrubbers Number 2 Boiler: Sugar Cane Growers Cooperative of Florida,* Belle Glade, Florida, November 28, 1990.

28. *Source Test Report For Particulate Emissions Impingement Wet Scrubber Number 2 Boiler: U. S. Sugar Corporation,* Bryant, Florida, January 23, 1991.

29. *Source Test Report For Particulate Emissions Twin Impingement Wet Scrubber Boiler Number 4: Talisman Sugar Corporation,* South Bay, Florida, December 9, 1991.

30. *Source Test Report For Particulate Emissions Impingement Wet Scrubber Boiler Number 8: Sugar Cane Growers Cooperative of Florida Airport Road,* Belle Glade, Florida, November 27, 1991.

31. *Source Test Report For Particulate Emissions Twin Impingement Wet Scrubbers Boiler Number 1: Sugar Cane Growers Cooperative of Florida,* Belle Glade, Florida, November 14, 1991.

32. *Source Test Report For Particulate Emissions Twin Impingement Wet Scrubbers Boiler Number 2: Sugar Cane Growers Cooperative of Florida,* Belle Glade, Florida, November 15, 1991.

33. *Source Test Report For Particulate Emissions Twin Impingement Wet Scrubbers Boiler Number 6: Talisman Sugar Corporation,* South Bay, Florida, December 11, 1991.

34. *Source Test Report For Particulate Emissions Boilers 3 and 4: Atlantic Sugar Association,* Belle Glade, Florida, November 20 and 21, 1991.

35. *Source Test Report For Particulate And Volatile Organic Compound Emissions, Nominal 10% Soil Feed Impingement Wet Scrubber Boiler Number 1*, Bryant, Florida, December 19, 1991.

36. *Source Test Report For Particulate Emissions Impingement Wet Scrubber Boiler Number 5*, Bryant, Florida, March 5, 1992.

37. *Source Test Report For Particulate And Volatile Organic Compound Emissions, Nominal 10% Soil Feed Impingement Wet Scrubber Boiler Number 3*, Bryant, Florida, December 17, 1991.

38. *Source Test Report For Particulate Emissions Impingement Wet Scrubber Boiler Number 4*, November 26, 1991.

39. *Source Test Report For Particulate Emissions Twin Impingement Wet Scrubbers Boiler Number 5*, November 20, 1991.

40. *Source Test Report For Particulate Emissions Twin Impingement Wet Scrubber Boiler Number 5*, Talisman Sugar Corporation, South Bay, Florida, December 10, 1991.

41. *Source Test Report For Particulate Emissions Twin Impingement Wet Scrubbers Boiler Number 3*, November 21, 1991.

42. *Atlantic Sugar Association Compliance Particulate Emissions Test Report Boiler #2*, Belle Glade, Florida Facility, February 1, 1991.

43. *Osceola Farms Company Compliance Particulate Emissions Test Report Boiler #2*, Pahokee, Florida Facility, February 7, 1991.

44. *Particulate Emissions Compliance Test Report Boiler #1: Atlantic Sugar Association,* Belle Glade, Florida Facility, December 11, 1990.

45. *Particulate Emissions Testing, Atlantic Sugar Association Boiler #1*, Belle Glade, Florida Facility, December 16, 1991.

46. *Particulate Emissions Compliance Test Report Boiler #5, Atlantic Sugar Association*, Belle Glade, Florida Facility, January 8, 1992.

47. *Atlantic Sugar Association Particulate Emissions Test Report Boiler #5*, January 10, 1991.

48. *Okeelanta Corporation Compliance Particulate Emissions Test Report Boiler #12*, South Bay Florida Facility, December 17, 1991.

49. *Particulate Emissions Testing, Atlantic Sugar Association Boiler #2*, Belle Glade, Florida Facility, December 12, 1991.

50. *Okeelanta Corporation Compliance Particulate Emissions Test Report Boiler #11*, South Bay Florida Facility, January 21 & 22, 1992.

51. *Okeelanta Corporation Compliance Particulate Emissions Test Report Boiler #10*, South Bay Florida Facility, January 29, 30 & 31, 1992.

52. *Okeelanta Corporation Compliance Particulate Emissions Test Report Boiler #6*, South Bay Florida Facility, January 24, 1992.

53. *Okeelanta Corporation Compliance Particulate Emissions Test Report Boiler #14*, South Bay Florida Facility, January 10 & 13, 1992.

54. *Okeelanta Corporation Compliance Particulate Emissions Test Report Boiler #15*, South Bay Florida Facility, January 8, 1992.

55. *Okeelanta Corporation Compliance Particulate Emissions Test Report Boiler #4*, South Bay Florida Facility, December 11 & 12, 1991.

56. *Okeelanta Corporation Compliance Particulate Emissions Test Report Boiler #5*, South Bay Florida Facility, December 12 & 13, 1991.

57. *Okeelanta Corporation Particulate Emissions Test Report Boiler #5*, December 12, 1990.

58. *Okeelanta Corporation Particulate Emissions Test Report Boiler #6*, December 13-14, 1990.

59. *Okeelanta Corporation Particulate Emissions Test Report Boiler #10*, January 29-30, 1991.

60. *Okeelanta Corporation Particulate Emissions Test Report Boiler #4*, December 10-11, 1990.

61. *Okeelanta Corporation Particulate Emissions Test Report Boiler #11*, December 6-7, 1990.

62. *Particulate Emissions Testing Okeelanta Corporation Boiler #12*, January 31 and February 1, 1991.

63. *Okeelanta Corporation Particulate Emissions Test Report Boiler #14*, February 4-5, 1991.

64. *Okeelanta Corporation Particulate Emissions Test Report Boiler #15*, February 8, 1991.

65. *Stack Test For Total Gaseous Non-Methane Organic Compounds Report 1371-S Boiler No. 5 - Bryant*, United States Sugar Corporation, February 15, 1990.

66. *Source Emissions Survey: Honokaa Sugar Company*, Kennedy Engineers, Inc., January 19, 1979.

1.9 Residential Fireplaces

1.9.1 General[1-2]

Fireplaces are used primarily for aesthetic effects and secondarily as supplemental heating sources in houses and other dwellings. Wood is the most common fuel for fireplaces, but coal and densified wood "logs" may also be burned. The user intermittently adds fuel to the fire by hand. Fireplaces can be divided into 2 broad categories: (1) masonry (generally brick and/or stone, assembled on site, and integral to a structure) and (2) prefabricated (usually metal, installed on site as a package with appropriate duct work).

Masonry fireplaces typically have large fixed openings to the fire bed and have dampers above the combustion area in the chimney to limit room air and heat losses when the fireplace is not being used. Some masonry fireplaces are designed or retrofitted with doors and louvers to reduce the intake of combustion air during use.

Prefabricated fireplaces are commonly equipped with louvers and glass doors to reduce the intake of combustion air, and some are surrounded by ducts through which floor level air is drawn by natural convection, heated, and returned to the room. Many varieties of prefabricated fireplaces are now available on the market. One general class is the freestanding fireplace, the most common of which consists of an inverted sheet metal funnel and stovepipe directly above the fire bed. Another class is the "zero clearance" fireplace, an iron or heavy-gauge steel firebox lined inside with firebrick and surrounded by multiple steel walls with spaces for air circulation. Some zero clearance fireplaces can be inserted into existing masonry fireplace openings, and thus are sometimes called "inserts". Some of these units are equipped with close-fitting doors and have operating and combustion characteristics similar to wood stoves. (See Section 1.10, Residential Wood Stoves.)

Masonry fireplaces usually heat a room by radiation, with a significant fraction of the combustion heat lost in the exhaust gases and through fireplace walls. Moreover, some of the radiant heat entering the room goes toward warming the air that is pulled into the residence to make up for that drawn up the chimney. The net effect is that masonry fireplaces are usually inefficient heating devices. Indeed, in cases where combustion is poor, where the outside air is cold, or where the fire is allowed to smolder (thus drawing air into a residence without producing appreciable radiant heat energy), a net heat loss may occur in a residence using a fireplace. Fireplace heating efficiency may be improved by a number of measures that either reduce the excess air rate or transfer back into the residence some of the heat that would normally be lost in the exhaust gases or through fireplace walls. As noted above, such measures are commonly incorporated into prefabricated units. As a result, the energy efficiencies of prefabricated fireplaces are slightly higher than those of masonry fireplaces.

1.9.2 Emissions And Controls[1-13]

Fireplace emissions, caused mainly by incomplete combustion, include particulate matter (PM) (mainly PM less than 10 micrometers in diameter [PM-10]), carbon monoxide (CO), sulfur oxides (SO_x), nitrogen oxides (NO_x), and volatile organic compounds (VOC). Significant quantities of unburnt combustibles are produced because fireplaces are inefficient combustion devices, with high uncontrolled excess air rates and without any sort of secondary combustion. The latter is especially important in wood burning because of its high volatile matter content, typically 80 percent by dry weight.

Hazardous air pollutants (HAPs) are a minor, but potentially important, component of wood smoke. A group of HAPs known as polycyclic organic matter (POM) includes potential carcinogens such as benzo(a)pyrene (BaP). POM results from the combination of free radical species formed in the flame zone, primarily as a consequence of incomplete combustion. Under reducing conditions, radical chain propagation is enhanced, allowing the buildup of complex organic material such as POM. The POM is generally found in or on smoke particles, although some sublimation into the vapor phase is probable.

Carbon dioxide (CO_2), methane (CH_4), and nitrous oxide (N_2O) emissions are all produced during wood combustion in residential fireplaces. Most of the fuel carbon in wood is converted to CO_2 during the combustion process, but because of ineffecient combustion, low combustion temperatures, and large amounts of excess air, a much higher ratio of carbon monoxide to CO_2 is produced than for combustion of wood in airtight wood stoves or wood-fired boilers. This formation of carbon monoxide coupled with incomplete combustion acts to slightly reduce CO_2 emissions compared to other types of wood combustion.[14-19] CO_2 emitted from this source may not increase total atmospheric CO_2, however, because emissions may be offset by the uptake of CO_2 by regrowing biomass.

Formation of N_2O during the combustion process is governed by a complex series of reactions and its formation is dependent upon many factors. Although no test data were available, it is assumed that N_2O emissions from residential fireplaces would be significantly higher than either wood stoves or commercial wood-fired boilers because of the combination of low combustion temperatures and high amounts of excess air.[14-19]

Methane emissions are highest during periods of low-temperature combustion or incomplete combustion, both of which occur often in residential fireplaces. VOC emissions for residential fireplaces are high compared to other wood combustion sources. Typically, conditions that favor formation of N_2O also favor emissions of CH_4.[14-19]

Another important constituent of wood smoke is creosote. This tar-like substance will burn if the fire is hot enough, but at insufficient temperatures, it may deposit on surfaces in the exhaust system. Creosote deposits are a fire hazard in the flue, but they can be reduced if the chimney is insulated to prevent creosote condensation or if the chimney is cleaned regularly to remove any buildup.

In order to decrease PM and CO emissions from fireplaces, combustion must be improved. Combustion efficiency improves as burn rate and flame intensity increase. Noncatalytic fireplace inserts reduce emissions by directing unburned hydrocarbons and CO into an insulated secondary chamber, where mixing with fresh, preheated makeup air occurs and combustion is enhanced.[20]

Fireplace emissions are highly variable and are a function of many wood characteristics and operating practices. In general, conditions which promote a fast burn rate and a higher flame intensity enhance secondary combustion and thereby lower emissions. Conversely, higher emissions will result from a slow burn rate and a lower flame intensity. Such generalizations apply particularly to the earlier stages of the burning cycle, when significant quantities of combustible volatile matter are being driven out of the wood. Later in the burning cycle, when all volatile matter has been driven out of the wood, the charcoal that remains burns with relatively few emissions.

Emission factors and their ratings for wood combustion in residential fireplaces are given in Table 1.9-1. Table 1.9-1 presents emission factors on a weight basis (lb/ton). To convert from lb/ton to lb/MMBtu, divide by a heating value of 17.3 MMBtu/ton.

1.9.3 Updates Since the Fifth Edition

The Fifth Edition was released in January 1995. Revisions to this section since that date are summarized below. For further detail, consult the memoranda describing each supplement or the background report for this section. These and other documents can be found on the CHIEF electronic bulletin board (919-541-5742), or on the new EFIG home page (http://www.epa.gov/oar/oaqps/efig/).

Supplement A, February 1996

No changes.

Supplement B, October 1996

- References for tables were editorially corrected.
- Text was added concerning controls.
- An emission factor was added for N_2O.

Table 1.9-1. EMISSION FACTORS FOR WOOD COMBUSTION IN RESIDENTIAL FIREPLACES[a]
(SCC 21-04-008-001)

Device	Pollutant	Emission Factor (lb/ton)	EMISSION FACTOR RATING
Fireplace	PM-10[b]	34.6	B
	CO[c]	252.6	B
	SO_x[d]	0.4	A
	NO_x[e]	2.6	C
	N_2O[f]	0.3	E
	CO_2[g]	3400	C
	Total VOC[h]	229.0	D
	POM[j]	16 E-03	E
	Aldehydes[k,m]	2.4	E

[a] Units are in lb of pollutant/ton of dry wood burned. To convert lb/ton to kg/Mg, multiply by 0.5. SCC = Source Classification Code.
[b] References 2, 5, 7, 13; contains filterable and condensable PM; PM emissions are considered to be 100% PM-10.
[c] References 2, 4-6, 9, 11, 13.
[d] References 1, 8.
[e] References 4, 6, 9, 11; expressed as NO_2.
[f] Reference 21.
[g] References 5, 13.
[h] References 1, 4, 5. Data used to calculate the average emission factor were collected by various methods. While the emission factor may be representative of the source population in general, factors may not be accurate for individual sources.
[j] Reference 2.
[k] Data used to calculate the average emission factor were collected from a single fireplace and are not representative of the general source population.
[m] References 4, 11.

References For Section 1.9

1. DeAngelis, D. G., *et al.*, *Source Assessment: Residential Combustion Of Wood*, EPA-600/2-80-042b, U. S. Environmental Protection Agency, Cincinnati, OH, March 1980.

2. Snowden, W. D., *et al.*, *Source Sampling Residential Fireplaces For Emission Factor Development*, EPA-450/3-76-010, U. S. Environmental Protection Agency, Research Triangle Park, NC, November 1975.

3. Shelton, J. W., and L. Gay, *Colorado Fireplace Report*, Colorado Air Pollution Control Division, Denver, CO, March 1987.

4. Dasch, J. M., "Particulate And Gaseous Emissions From Wood-burning Fireplaces", *Environmental Science And Technology, 16*(10):643-67, October 1982.

5. *Source Testing For Fireplaces, Stoves, And Restaurant Grills In Vail, Colorado*, EPA Contract No. 68-01-1999, Pedco Environmental, Inc., Cincinnati, OH, December 1977.

6. Written communication from Robert C. McCrillis, U. S. Environmental Protection Agency, Research Triangle Park, NC, to Neil Jacquay, U. S. Environmental Protection Agency, San Francisco, CA, November 19, 1985.

7. *Development Of AP-42 Emission Factors For Residential Fireplaces*, EPA Contract No. 68-D9-0155, Advanced Systems Technology, Inc., Atlanta, GA, January 11, 1990.

8. DeAngelis, D. G., *et al.*, *Preliminary Characterization Of Emissions From Wood Fired Residential Combustion Equipment*, EPA-600/7-80-040, U. S. Environmental Protection Agency, Cincinnati, OH, March 1980.

9. Kosel, P., *et al.*, *Emissions From Residential Fireplaces*, CARB Report C-80-027, California Air Resources Board, Sacramento, CA, April 1980.

10. Clayton, L., *et al.*, *Emissions From Residential Type Fireplaces*, Source Tests 24C67, 26C, 29C67, 40C67, 41C67, 65C67 and 66C67, Bay Area Air Pollution Control District, San Francisco, CA, January 31, 1968.

11. Lipari, F., *et al.*, *Aldehyde Emissions From Wood-Burning Fireplaces*, Publication GMR-4377R, General Motors Research Laboratories, Warren, MI, March 1984.

12. Hayden, A., C. S., and R. W. Braaten, "Performance Of Domestic Wood Fired Appliances", Presented at the 73rd Annual Meeting of the Air Pollution Control Association, Montreal, Quebec, Canada, June 1980.

13. Barnett, S. G., *In-Home Evaluation Of Emissions From Masonry Fireplaces And Heaters*, OMNI Environmental Services, Inc., Beaverton, OR, September 1991.

14. L. P. Nelson, et al., *Global Combustion Sources Of Nitrous Oxide Emissions*, Research Project 2333-4 Interim Report, Sacramento: Radian Corporation, 1995.

15. R. L. Peer, et al., *Characterization Of Nitrous Oxide Emission Sources*, Prepared for the US EPA Contract 68-D1-0031, Research Triangle Park, NC: Radian Corporation, 1995.

16. S. D. Piccot, et al., *Emissions And Cost Estimates For Globally Significant Anthropogenic Combustion Sources Of NO_x, N_2O, CH_4, CO, And CO_2*, EPA Contract No. 68-02-4288, Research Triangle Park, NC: Radian Corporation, 1990.

17. G. Marland, and R. M. Rotty, *Carbon Dioxide Emissions From Fossil Fuels: A Procedure For Estimation And Results For 1951-1981*, DOE/NBB-0036 TR-003, Carbon Dioxide Research Division, Office of Energy Research, U.S. Department of Energy, Oak Ridge, TN, 1983.

18. G. Marland and R. M. Rotty, "Carbon Dioxide Emissions From Fossil Fuels: A Procedure For Estimation And Results For 1950-1982," *Tellus*, 36B: 232-261.

19. *Sector-Specific Issues and Reporting Methodologies Supporting the General Guidelines for the Voluntary Reporting of Greenhouse Gases under Section 1605(b) of the Energy Policy Act of 1992* (1994) DOE/PO-0028, Volume 2 of 3, U.S. Department of Energy.

20. *Guidance Document For Residential Wood Combustion Emission Control Measures,* EPA-4502-89-015, U. S. Environmental Protection Agency, Research Triangle Park, NC, September 1989.

21. Ortech Corporation, *Inventory Methods Manual for Estimating Canadian Emissions of Greenhouse Gases*, prepared for Environment Canada, 1994.

1.10 Residential Wood Stoves

1.10.1 General[1-2]

Wood stoves are enclosed wood heaters that control burning or burn time by restricting the amount of air that can be used for combustion; they are commonly used in residences as space heaters. They are used both as the primary source of residential heat and to supplement conventional heating systems. Based on known variations in construction, combustion, and emission characteristics, there are five different categories of residential wood burning devices: (1) the conventional wood stove; (2) the noncatalytic wood stove; (3) the catalytic wood stove; (4) the pellet stove; and (5) the masonry heater.

The conventional stove category comprises all stoves without catalytic combustors not included in the other noncatalytic categories (i. e., noncatalytic and pellet). Conventional stoves do not have any emission reduction technology or design features and, in most cases, were manufactured before July 1, 1986. Stoves with various airflow designs may be in this category, such as updraft, downdraft, crossdraft, and S-flow.

Noncatalytic wood stoves are those units that do not employ catalysts but that do have emission reducing technology or features. Typical noncatalytic design includes baffles and secondary combustion chambers.

Catalytic stoves are equipped with a ceramic or metal honeycomb device, called a combustor or converter, that is coated with a noble metal such as platinum or palladium. The catalyst material reduces the ignition temperature of the unburned volatile organic compounds (VOC) and carbon monoxide (CO) in the exhaust gases, thus augmenting their ignition and combustion at normal stove operating temperatures. As these components of the gases burn, the temperature inside the catalyst increases to a point at which the ignition of the gases is essentially self-sustaining.

Pellet stoves are those fueled with pellets of sawdust, wood products, and other biomass materials pressed into manageable shapes and sizes. These stoves have active air flow systems and unique grate design to accommodate this type of fuel. Some pellet stove models are subject to the 1988 New Source Performance Standards (NSPS), while others are exempt due to a high air-to-fuel ratio (i. e., greater than 35-to-1).

Masonry heaters are large, enclosed chambers made of masonry products or a combination of masonry products and ceramic materials. These devices are exempt from the 1988 NSPS due to their weight (i. e., greater than 1764 lb). Masonry heaters are gaining popularity as a cleaner-burning, heat-efficient form of primary and supplemental heat, relative to some other types of wood heaters. In a masonry heater, a complete charge of wood is burned in a relatively short period of time. The use of masonry materials promotes heat transfer. Thus, radiant heat from the heater warms the surrounding area for many hours after the fire has burned out.

1.10.2 Emissions

The combustion and pyrolysis of wood in wood stoves produce atmospheric emissions of particulate matter (PM), CO, nitrogen oxides (NO_x), VOC, mineral residues, and to a lesser extent, sulfur oxides (SO_x). The quantities and types of emissions are highly variable, depending on a

number of factors, including stage of the combustion cycle. During initial burning stages, after a new wood charge is introduced, emissions (primarily VOCs) increase dramatically. After the initial period of high burn rate, there is a charcoal stage of the burn cycle characterized by a slower burn rate and decreased emissions. Emission rates during this stage are cyclical, characterized by relatively long periods of low emissions and shorter episodes of emission spikes.

Particulate emissions are defined in this discussion as the total catch measured by the EPA Method 5H (Oregon Method 7) sampling train.[1] A small portion of wood stove particulate emissions includes "solid" particles of elemental carbon and wood. The vast majority of particulate emissions are condensed organic products of incomplete combustion equal to or less than 10 micrometers in aerodynamic diameter (PM-10). Although reported particle size data are scarce, one reference states that 95 percent of the particles emitted from a wood stove were less than 0.4 micrometers in size.[3]

SO_x are formed by oxidation of sulfur in the wood. NO_x are formed by oxidation of fuel and atmospheric nitrogen. Mineral constituents, such as potassium and sodium compounds, are released from the wood matrix during combustion.

The high levels of organic compounds and CO emissions result from incomplete combustion of the wood. Organic constituents of wood smoke vary considerably in both type and volatility. These constituents include simple hydrocarbons of carbon numbers 1 through 7 (C1 - C7) (which exist as gases or which volatilize at ambient conditions) and complex low-volatility substances that condense at ambient conditions. These low volatility condensable materials generally are considered to have boiling points below 572°F.

Polycyclic organic matter (POM) is an important component of the condensable fraction of wood smoke. POM contains a wide range of compounds, including organic compounds formed through incomplete combustion by the combination of free radical species in the flame zone. These compounds are classified as hazardous air pollutants under Title III of the 1990 Clean Air Act Amendments, which contains the sub-group of hydrocarbons called polycyclic aromatic hydrocarbons (PAH).

1.10.3 Controls[4]

To decrease PM and CO emissions from wood stoves, combustion efficiency must increase. Both catalytic and noncatalytic control techniques increase efficiency and decrease emissions. Catalytic combustors reduce emissions by using a ceramic catalyst coated with a noble metal (e. g., palladium or platinum) which allows organics and other combustibles to burn at temperatures much lower than required in a noncatalytic firebox.

Older, noncatalytic wood stoves reduce emissions by directing unburned hydrocarbons (HCs) and CO into a secondary chamber, where mixing with fresh, preheated makeup air enhances further combustion. Current noncatalytic wood stoves inject fresh secondary air into the top of the primary combustion chamber, allowing ignition of the HCs. Multiple air channels, some with their own controls, coupled with baffles which trap and retain heat in the top of the firebox facilitate this combustion.

Emission factors and their ratings for wood combustion in residential wood stoves, pellet stoves, and masonry heaters are presented in Tables 1.10-1, 1.10-2, 1.10-3, 1.10-4, 1.10-5, 1.10-6, and 1.10-7. Tables in this section present emission factors on a weight basis (lb/ton). To convert to an energy basis (lb/MMBtu), divide by a heating value of 17.3 MMBtu/ton. The analysis leading to the revision of these emission factors is contained in the emission factor documentation.[4] These tables

include emission factors for criteria pollutants (PM-10, CO, NO_x, SO_x), carbon dioxide (CO_2), total organic compounds (TOC), speciated organic compounds, PAH, and some elements. The emission factors are presented by wood heater type. PM-10 and CO emission factors are further classified by stove certification category. Phase II stoves are those certified to meet the July 1, 1990, EPA standards; Phase I stoves meet only the July 1, 1988, EPA standards; and Pre-Phase I stoves do not meet any of the EPA standards but in most cases do necessarily meet the Oregon 1986 certification standards.[1]

The emission factors for PM and CO in Tables 1.10-1 and 1.10-2 are averages, derived entirely from field test data obtained under actual operating conditions. Still, there is a potential for higher emissions from some wood stove, pellet stove, and masonry heater models. Particulate emissions are presented as the total PM emissions equivalent to that collected by EPA Method 5H. This method employs a heated filter followed by three impingers, an unheated filter, and a final impinger. Conversions are employed, as appropriate, for data collected with other methods.

Table 1.10-5 shows net efficiency by device type, determined entirely from field test data. Net or overall efficiency is the product of combustion efficiency multiplied by heat transfer efficiency. Wood heater efficiency is an important parameter that is used, along with emission factors and percent degradation, to calculate PM-10 emission reduction credits. Percent degradation is related to the loss in effectiveness of a wood stove control device or catalyst over a period of operation. Control degradation for any stove, including noncatalytic wood stoves, may also occur as a result of deteriorated seals and gaskets, misaligned baffles and bypass mechanisms, broken refractories, or other damaged functional components. The increase in emissions which can result from control degradation has not been quantified.

1.10.4 Updates Since the Fifth Edition

The Fifth Edition was released in January 1995. Revisions to this section since that date are summarized below. For further detail, consult the memoranda describing each supplement or the background report for this section. These and other documents can be found on the CHIEF electronic bulletin board (919-541-5742), or on the new EFIG home page (http://www.epa.gov/oar/oaqps/efig/).

Supplement A, February 1996

No changes.

Supplement B, October 1996

- Text was added concerning controls.
- Reference 15 was corrected.
- The emission factor for phenanthrene was corrected.
- Information was incorporated concerning methane and nonmethane-HC.

Table 1.10-1. EMISSION FACTORS FOR RESIDENTIAL WOOD COMBUSTION[a]

Pollutant/EPA Certification[b]	EMISSION FACTOR RATING	Wood Stove Type Emission Factor (lb/ton)			Pellet Stove Type,[c] Emission Factor (lb/ton) (SCC 21-04-008-053)		Masonry Heater, Emission Factor (lb/ton) (SCC 21-04-008-055)
		Conventional (SCC 21-04-008-051)	Noncatalytic (SCC 21-04-008-050)	Catalytic (SCC 21-04-008-030)	Certified	Exempt	Exempt[d]
PM-10[e]							
Pre-Phase I	B	30.6	25.8	24.2	ND	ND	ND
Phase I	B	ND	20.0	19.6	ND	ND	ND
Phase II	B	ND	14.6	16.2	4.2	ND	ND
All	B	30.6	19.6	20.4	4.2	8.8	5.6
CO							
Pre-Phase I	B	230.8	ND	ND	ND	ND	ND
Phase I	B	ND	ND	104.4	ND	ND	ND
Phase II	B	ND	140.8	107.0	39.4	ND	ND
All	B	230.8	140.8	104.4	39.4	52.2	149.0
NO_x		2.8[f]	ND	2.0[g]	13.8[g]	ND	ND
SO_x	B	0.4	0.4	0.4	0.4	ND	ND
CO_2[j]	C	ND	ND	ND	2952	3671	3849
TOC[k]	C	83	28	26.6	ND	ND	ND
Methane	C	30	16	11.6	ND	ND	ND
TNMOC	C	53	12	15	ND	ND	ND

[a] To convert from lb/ton to kg/Mg, multiply by 0.5. SCC = Source Classification Code. ND = no data. TNMOC = total nonmethane organic compounds.
[b] Pre-Phase I = Not certified to 1988 EPA emission standards; Phase I = Certified to 1988 EPA emission standards; Phase II = Certified to 1990 EPA emission standards; All = Average of emission factors for all devices.
[c] Certified = Certified pursuant to 1988 NSPS; Exempt = Exempt from 1988 NSPS (i. e., air-to-fuel ratio > 35:1).
[d] Exempt = Exempt from 1988 NSPS (i. e., device weight >800 kg).
[e] References 5-18. PM-10 is defined as equivalent to total catch by EPA method 5H train.
[f] EMISSION FACTOR RATING: C.
[g] EMISSION FACTOR RATING: E.
[h] References 12, 15-18.
[j] CO_2 emitted from this source may not increase total atmospheric CO_2 because the emissions may be offset by the uptake of CO_2 by regrowing biomass.
[k] References 12, 19-22. Data show a high degree of variability within the source population. Factors may not be accurate for individual sources.

Table 1.10-2. ORGANIC COMPOUND EMISSION FACTORS FOR RESIDENTIAL WOOD COMBUSTION[a,b]

EMISSION FACTOR RATING: E

Compounds	Wood Stove Type Emission Factor (lb/ton)	
	Conventional (SCC 21-04-008-051)	Catalytic (SCC 21-04-008-030)
Ethane	1.470	1.376
Ethylene	4.490	3.482
Acetylene	1.124	0.564
Propane	0.358	0.158
Propene	1.244	0.734
i-Butane	0.028	0.010
n-Butane	0.056	0.014
Butenes[c]	1.192	0.714
Pentenes[d]	0.616	0.150
Benzene	1.938	1.464
Toluene	0.730	0.520
Furan	0.342	0.124
Methyl Ethyl Ketone	0.290	0.062
2-Methyl Furan	0.656	0.084
2,5-Dimethyl Furan	0.162	0.002
Furfural	0.486	0.146
o-Xylene	0.202	0.186

[a] Reference 19. To convert from lb/ton to kg/Mg, multiply by 0.5. SCC = Source Classification Code.

[b] Data show a high degree of variability within the source population. Factors may not be accurate for individual sources.

[c] 1-butene, i-butene, t-2-butene, c-2-butene, 2-me-1-butene, 2-me-butene are reported as butenes.

[d] 1-pentene, t-2-pentene, and c-2-pentene are reported as pentenes.

Table 1.10-3. PAH EMISSION FACTORS FOR RESIDENTIAL WOOD COMBUSTION[a,b]

EMISSION FACTOR RATING: E

Pollutant	Stove Type Emission Factor (lb/ton)			
	Conventional[c] (SCC 21-04-008-051)	Noncatalytic[d] (SCC 21-04-008-050)	Catalytic[e] (SCC 21-04-008-030)	Exempt Pellet[f] (SCC 21-04-008-053)
PAH				
Acenaphthene	0.010	0.010	0.006	ND
Acenaphthylene	0.212	0.032	0.068	ND
Anthracene	0.014	0.009	0.008	ND
Benzo(a)Anthracene	0.020	<0.001	0.024	ND
Benzo(b)Fluoranthene	0.006	0 004	0.004	2.60 E-05
Benzo(g,h,i)Fluoranthene	ND	0.028	0.006	ND
Benzo(k)Fluoranthene	0.002	<0.001	0.002	ND
Benzo(g,h,i)Perylene	0 004	0.020	0.002	ND
Benzo(a)Pyrene	0.004	0.006	0.004	ND
Benzo(e)Pyrene	0.012	0 002	0.004	ND
Biphenyl	ND	0.022	ND	ND
Chrysene	0.012	0.010	0.010	7.52 E-05
Dibenzo(a,h)Anthracene	BDL	0.004	0.002	ND
7,12-Dimethylbenz(a)Anthracene	ND	0.004	ND	ND
Fluoranthene	0 020	0.008	0.012	5.48 E-05
Fluorene	0.024	0.014	0.014	ND
Indeno(1,2,3,cd)Pyrene	BDL	0.020	0 004	ND
9-Methylanthracene	ND	0.004	ND	ND
12-Methylbenz(a)Anthracene	ND	0.002	ND	ND
3-Methylchlolanthrene	ND	<0.001	ND	ND
1-Methylphenanthrene	ND	0.030	ND	ND
Naphthalene	0.288	0.144	0.186	ND
Nitronaphthalene	ND	BDL	ND	ND
Perylene	ND	0.002	ND	ND
Phenanthrene	0 078	0.118	0 048	3.32 E-05
Phenanthrol	ND	BDL	ND	ND
Phenol	ND	<0 001	ND	ND
Pyrene	0.024	0.008	0.010	4.84 E-05
PAH Total	0.730	<0.500	0.414	2.38 E-04

[a] To convert from lb/ton to kg/Mg, multiply by 0.5. SCC = Source Classification Code. ND = no data. BDL = below detection limit. < = values are below this detection limit.

[b] Data show a high degree of variability within the source population and/or came from a small number of sources. Factors may not be accurate for individual sources.

[c] Reference 19.

[d] References 20,23-25.

[e] References 13,19-20,23,26.

[f] Reference 18. Exempt = Exempt from 1988 NSPS (i. e., air-to-fuel ratio > 35:1).

Table 1.10-4. TRACE ELEMENT EMISSION FACTORS FOR RESIDENTIAL WOOD COMBUSTION[a,b]

EMISSION FACTOR RATING: E

Element	Wood Stove Type Emission Factor (lb/ton)		
	Conventional (SCC 21-04-008-051)	Noncatalytic (SCC 21-04-008-050)	Catalytic (SCC 21-04-008-030)
Cadmium (Cd)	2.2 E-05	2.0 E-05	4.6 E-05
Chromium (Cr)	<1.0 E-06	<1.0 E-06	<1.0 E-06
Manganese (Mn)	1.7 E-04	1.4 E-04	2.2 E-04
Nickel (Ni)	1.4 E-05	2.0 E-05	2.2 E-06

[a] References 19,25. To convert from lb/ton to kg/Mg, multiply by 0.5. SCC = Source Classification Code. < = values are below this detection limit.

[b] The data used to develop these emission factors showed a high degree of variability within the source population. Factors may not be accurate for individual sources.

Table 1.10-5. SUMMARY OF WOOD STOVE NET EFFICIENCIES[a]

Wood Heater Type	Source Classification Code	Net Efficiency (%)	Reference
Wood Stoves			
Conventional	21-04-008-051	54	16
Noncatalytic	21-04-008-050	68	7,10,16
Catalytic	21-04-008-030	68	16,27
Pellet Stoves			
Certified[b]	21-04-008-053	68	9
Exempt[c]		56	17
Masonry Heaters			
All	21-04-008-055	58	18

[a] Net efficiency is a function of both combustion efficiency and heat transfer efficiency. The percentages shown here are based on data collected from in-home testing. References 5,8,10-11,17-18,28.

[b] Certified = Certified pursuant to 1988 NSPS.

[c] Exempt = Exempt from 1988 NSPS (i. e., air-to-fuel ratio >35:1).

References For Section 1.10

1. *Standards Of Performance For New Stationary Sources: New Residential Wood Heaters*, 53 FR 5575, February 26, 1988.

2. R. Gay and J. Shah, *Technical Support Document For Residential Wood Combustion*, EPA-450/4-85-012, U. S. Environmental Protection Agency, Research Triangle Park, NC, February 1986.

3. J. A. Rau and J. J. Huntzicker, *Composition And Size Distribution Of Residential Wood Smoke Aerosols*, Presented at the 21st Annual Meeting of the Air and Waste Management Association, Pacific Northwest International Section, Portland, OR, November 1984.

4. *Emission Factor Documentation For AP-42 Section 1.10, Residential Wood Stoves*, Office of Air Quality Planning and Standards, U. S. Environmental Protection Agency, Research Triangle Park, NC, April 1993.

5. S. G. Barnett, *Field Performance Of Advanced Technology Woodstoves In Glens Falls, N.Y. 1988-1989.*, Vol. 1, New York State Energy Research and Development Authority, Albany, NY, October 1989.

6. P. G. Burnet, *The Northeast Cooperative Woodstove Study*, Volume 1, EPA-600/7-87-026a, U. S. Environmental Protection Agency, Cincinnati, OH, November 1987.

7. D. R. Jaasma and M. R. Champion, *Field Performance Of Woodburning Stoves In Crested Butte During The 1989-90 Heating Season*, Town of Crested Butte, Crested Butte, CO, September 1990.

8. S. Dernbach, *Woodstove Field Performance In Klamath Falls, OR*, Wood Heating Alliance, Washington, DC, April 1990.

9. C. A. Simons and S. K. Jones, *Performance Evaluation Of The Best Existing Stove Technology (BEST) Hybrid Woodstove And Catalytic Retrofit Device*, Oregon Department Of Environmental Quality, Portland, OR, July 1989.

10. S. G. Barnett and R. B. Roholt, *In-home Performance Of Certified Pellet Stoves In Medford And Klamath Falls, OR*, U. S. Department of Energy Report No. PS407-02, July 1990.

11. S. G. Barnett, *In-Home Evaluation Of Emission Characteristics Of EPA-Certified High-Tech Non-Catalytic Woodstoves In Klamath Falls, OR, 1990*, prepared for the Canada Center for Mineral and Energy Technology, Energy, Mines and Resources, Canada, DSS File No. 145Q, 23440-9-9230, June 1, 1990.

12. R. C. McCrillis and R. G. Merrill, "Emission Control Effectiveness Of A Woodstove Catalyst And Emission Measurement Methods Comparison," Presented at the 78th Annual Meeting of the Air And Waste Management Association, Detroit, MI, 1985.

13. K. E. Leese and S. M. Harkins, *Effects Of Burn Rate, Wood Species, Moisture Content And Weight Of Wood Loaded On Woodstove Emissions*, EPA-600/2-89-025, U. S. Environmental Protection Agency, Cincinnati, OH, May 1989.

14. S. G. Barnett, *In-Home Evaluation Of Emissions From A Tulikivi KTU 2100 Masonry Heater*, OMNI Environmental Services, Inc., Beaverton, OR, March 1992.

15. S. G. Barnett, *In-Home Evaluation Of Emissions From A Royal Crown 2000 Masonry Heater*, OMNI Environmental Services, Inc., Beaverton, OR, March 1992.

16. S. G. Barnett, *In-Home Evaluation Of Emissions From A Biofire 4x3 Masonry Heater*, OMNI Environmental Services, Inc., Beaverton, OR, March 1992.

17. S. G. Barnett and R. D. Bighouse, *In-Home Demonstrations Of The Reduction Of Woodstove Emissions From The Use Of Densified Logs*, Oregon Department of Energy and U. S. Environmental Protection Agency, July 1992.

18. S. G. Barnett and P. G. Fields, *In-Home Performance Of Exempt Pellet Stoves In Medford, Oregon*, U. S. Department Of Energy, Oregon Department Of Energy, Tennessee Valley Authority, And Oregon Department Of Environmental Quality, July 1991.

19. P. G. Burnet, *et al.*, *Effects Of Appliance Type And Operating Variables On Woodstove Emissions*, Vol. I., Report and Appendices 6-C, EPA-600/2-90-001a, U. S. Environmental Protection Agency, Cincinnati, OH, January 1990.

20. L. E. Cottone and E. Mesner, *Test Method Evaluations And Emissions Testing For Rating Wood Stoves*, EPA-600/2-86-100, U. S. Environmental Protection Agency, Cincinnati, OH, October 1986.

21. Letter and attachments to Susan Stamey-Hall, Radian Corp. from Robert C. McCrillis, U. S. EPA concerning VOC emissions from wood stoves. May 8, 1995.

22. Jaasma, D. R., Stern, C. H., and M. Champion, *Field Performance Of Woodburning Stove In Crested Butte Durring The 1991-92 Heating Season*, EPA-600/R-94-061, U. S. Environmental Protection Agency, Research Triangle Park, April 1994.

23. J. M. Allen *et al.*, *Study of the Effectiveness Of A Catalytic Combustion Device On A Wood Burning Appliance*, EPA-600/7-84-046, U. S. Environmental Protection Agency, Research Triangle Park, NC, March 1984.

24. R. S. Truesdale and J. G. Cleland, *Residential Stove Emissions From Coal And Other Alternative Fuels Combustion*, in papers at the Specialty Conference on Residential Wood and Coal Combustion, Louisville, KY, March 1982.

25. *Residential Wood Heater Test Report*, Phase II Testing, Vol. 1, TVA, Division Of Energy, Construction And Rates, Chattanooga, TN, August 1983.

26. D. G. DeAngelis, *et al.*, *Preliminary Characterization Of Emissions From Wood-fired Residential Combustion Equipment*, EPA-600/7-80-040, U. S. Environmental Protection Agency, Cincinnati, OH, March 1980.

27. C. A. Simons *et al.*, *Woodstove Emission Sampling Methods Comparability Analysis And In-situ Evaluation Of New Technology Woodstoves*, EPA-600/7-89-002, U. S. Environmental Protection Agency, Cincinnati, OH, January 1989.

28. S. G. Barnett, *Summary Report Of The In-Home Emissions And Efficiency Performance Of Five Commercially Available Masonry Heaters*, the Masonry Heater Association, Reston, VA, May 1992.

1.11 Waste Oil Combustion

1.11.1 General[1]

Waste oil includes used crankcase oils from automobiles and trucks, used industrial lubricating oils (such as metal working oils), and other used industrial oils (such as heat transfer fluids). When discarded, these oils become waste oils due to a breakdown of physical properties and contamination by the materials they come in contact with. The different types of waste oils may be burned as mixtures or as single fuels where supplies allow. Waste, or used, oil can be burned in a variety of combustion systems including industrial boilers; commercial/institutional boilers; space heaters; asphalt plants; cement and lime kilns; other types of dryers and calciners; and steel production blast furnaces. Boilers and space heaters consume the bulk of the waste oil burned. Space heaters are small combustion units (generally less than 250,000 British thermal units per hour [Btu/hr] input) that are common in automobile service stations and automotive repair shops where supplies of waste crankcase oil are available.

Boilers designed to burn No. 6 (residual) fuel oils or one of the distillate fuel oils can be used to burn waste oil, with or without modifications for optimizing combustion. As an alternative to boiler modification, the properties of waste oil can be modified by blending it with fuel oil, to the extent required to achieve a clean-burning fuel mixture.

1.11.2 Emissions[1]

The emissions from burning waste oils reflect the compositional variations of the waste oils. Potential pollutants include carbon monoxide (CO), sulfur oxides (SO_x), nitrogen oxides (NO_x), particulate matter (PM), particles less than 10 micrometers in size (PM-10), toxic metals, organic compounds, hydrogen chloride, and global warming gases (carbon dioxide [CO_2], methane [CH_4]).

Particulate Matter[1] -

Ash levels in waste oils are normally much higher than ash levels in either distillate oils or residual oils. Waste oils have substantially higher concentrations of most of the trace elements reported relative to those concentrations found in virgin fuel oils. Without air pollution controls, higher concentrations of ash and trace metals in the waste fuel translate to higher emission levels of PM and trace metals than is the case for virgin fuel oils.

Sulfur Oxides[1] -

Emissions of SO_x are a function of the sulfur content of the fuel. The sulfur content varies but some data suggest that uncontrolled SO_x emissions will increase when waste oil is substituted for a distillate oil but will decrease when residual oil is replaced.

Chlorinated Organics[1] -

Constituent chlorine in waste oils typically exceeds the concentration of chlorine in virgin distillate and residual oils. High levels of halogenated solvents are often found in waste oil as a result of inadvertent or deliberate addition of contaminant solvents to the waste oils. Many efficient combustors can destroy more than 99.99 percent of the chlorinated solvents present in the fuel. However, given the wide array of combustor types which burn waste oils, the presence of these compounds in the emission stream cannot be ruled out.

Other Organics[1] -

The flue gases from waste oil combustion often contain organic compounds other than chlorinated solvents. At ppmw levels, several hazardous organic compounds have been found in waste oils. Benzene, toluene, polychlorinated biphenyls (PCBs), and polychlorinated dibenzo-d-dioxins are a few of the hazardous compounds that have been detected in waste oil samples. Additionally, these hazardous compounds may be formed in the combustion process as products of incomplete combustion.

1.11.3 Controls[1]

Emissions can be controlled by the pretreatment of the waste oil to remove the pollutant precursors or with emission controls to remove the air pollutants. Reduction of emission levels is not the only purpose of pretreatment of the waste oil. Improvement in combustion efficiency and reduction of erosion and corrosion of the combustor internal surfaces are important considerations. The most common pretreatment scheme uses sedimentation followed by filtration. Water and large particles (greater than 10 microns in diameter) are removed without having much effect on sulfur, nitrogen, or chlorine contents. Other methods of pretreatment involve clay contacting; demetallization by acid, solvent, or chemical contacting; and thermal processing to remove residual water and light ends. These latter processes might be attractive as waste reduction schemes or to recycle the waste oil, but the added costs probably hinder their use as part of a combustion process.

Blending of waste oil with a virgin fuel oil is practiced frequently and has the same effect as some of the other pretreatment processes. However, for the purpose of developing emission factors, blending by itself was assumed to be in the uncontrolled category.

Waste oil serves as a substitute fuel for combustors designed to burn distillate or residual oils. Therefore, the emission controls are usually those in place when waste oil is first burned. For small boilers and space heaters, all of the sources having acceptable test data for determining emission factors were uncontrolled. For an asphalt plant, PM emissions, which included the dust from drying of the aggregate, were controlled with a fabric filter.

Emission factors and emission factor ratings for waste oil combustion are shown in Tables 1.11-1, 1.11-2, 1.11-3, 1.11-4, and 1.11-5. Emission factors have been determined for emissions from uncontrolled small boilers and space heaters combusting waste oil. These factors apply to both blended and unblended waste oil fuels when waste oil comprises the majority of the fuel combusted. If virgin oil comprises the majority of the fuel combusted, the emission factors presented in Section 1.3, Fuel Oil Combustion, should be used.

Evaporative emissions from waste oil used as a diluent in batch asphalt plants may be estimated using the procedures outlined in Section 4.5.

Tables in this section present emission factors on a volume basis (lb/10^3gal). To convert to an energy basis (lb/MMBtu), divide by the heating value of the oil in units of MMBtu/10^3gal, if known. If the heating value is not known, and the waste oil is blended with residual oil, divide by a heating value of 150 MMBtu/10^3gal. If the waste oil is blended with distillate oil, divide by a heating value of 140 MMBtu/10^3gal.

1.11.4 Updates Since the Fifth Edition

The Fifth Edition was released in January 1995. Revisions to this section since that date are summarized below. For further detail, consult the memoranda describing each supplement or the

background report for this section. These and other documents can be found on the CHIEF electronic bulletin board (919-541-5742), or on the new EFIG home page (http://www.epa.gov/oar/oaqps/efig/).

Supplement A, February 1996

- An earlier transcription error was corrected and the TOC emission factor was changed from 0.1 to 1.0 lb/1000 gal.

Supplement B, October 1996

- Math errors were corrected and factors for As, Be, Cd, Cr, Co, and speciated organics were changed.

- The CO_2 factors were revised based on a review of existing information.

Table 1.11-1. EMISSION FACTORS FOR PARTICULATE MATTER (PM), PARTICULATE MATTER LESS THAN 10 MICROMETERS (PM-10), AND LEAD (Pb) FROM WASTE OIL COMBUSTORS[a]

Source Category (SCC)	PM[b]		PM-10[c]		Pb[d]	
	Emission Factor (lb/10^3 gal)	EMISSION FACTOR RATING	Emission Factor (lb/10^3 gal)	EMISSION FACTOR RATING	Emission Factor (lb/10^3 gal)	EMISSION FACTOR RATING
Small boilers (1-03-013-02)	64A[d]	C	51A	C	55L[f]	D
Space heaters Vaporizing burner (1-05-001-14, 1-05-002-14)	2.8A	D	ND	NA	0.41L	D
Atomizing burner (1-05-001-13, 1-05-002-13)	66A	D	57A	E	50L	D

[a] Units are lb of pollutant/10^3 gallons of blended waste oil burned. To convert from lb/10^3 gallons to kg/m^3, multiply by 0.12. SCC = Source Classification Code. ND = no data. NA = not applicable.
[b] References 2-5.
[c] Reference 1.
[d] References 4-6.
[e] A = weight % ash in fuel. Multiply numeric value by A to obtain emission factor. For example, if ash content is 5%, then A = 5.
[f] L = weight % lead in fuel. Multiply numeric value by L to obtain emission factor. For example, if lead content is 5%, then L = 5.

Table 1.11-2. EMISSION FACTORS FOR NITROGEN OXIDES (NO_x), SULFUR OXIDES (SO_x), AND CARBON MONOXIDE (CO) FROM WASTE OIL COMBUSTORS[a]

Source Category (SCC)	NO_x[b]		SO_x[b]		CO[c]	
	Emission Factor ($lb/10^3$ gal)	EMISSION FACTOR RATING	Emission Factor ($lb/10^3$ gal)	EMISSION FACTOR RATING	Emission Factor ($lb/10^3$ gal)	EMISSION FACTOR RATING
Small boilers (1-03-013-02)	19	C	147S[d]	C	5	D
Space heaters Vaporizing burner (1-05-001-14, 1-05-002-14)	11	D	100S[d]	D	1.7	D
Atomizing burner (1-05-001-13, 1-05-002-13)	16	D	107S[d]	D	2.1	D

[a] Units are lb of pollutant/10^3 gallons of blended waste oil burned. To convert from $lb/10^3$ gallons to kg/m^3, multiply by 0.12. SCC = Source Classification Code.
[b] References 4, 7.
[c] References 2, 5.
[d] S = weight % sulfur in fuel. Multiply numeric value by S to obtain emission factor. For example, if sulfur content is 3.4%, then S = 3.4.

Table 1.11-3. EMISSION FACTORS FOR TOTAL ORGANIC COMPOUNDS (TOC), HYDROGEN CHLORIDE (HCl), AND CARBON DIOXIDE (CO_2) FROM WASTE OIL COMBUSTORS[a]

Source Category (SCC)	TOC[b]		HCl[b]		CO_2[c]	
	Emission Factor ($lb/10^3$ gal)	EMISSION FACTOR RATING	Emission Factor ($lb/10^3$ gal)	EMISSION FACTOR RATING	Emission Factor ($lb/10^3$ gal)	EMISSION FACTOR RATING
Small boilers (1-03-013-02)	1.0	D	66Cl[d]	C	22,000	C
Space heaters Vaporizing burner (1-05-001-14, 1-05-002-14)	1.0	D	ND	NA	22,000	D
Atomizing burner (1-05-001-13, 1-05-002-13)	1.0	D	ND	NA	22,000	D

[a] Units are lb of pollutant/10^3 gallons of blended waste oil burned. To convert from $lb/10^3$ gallons to kg/m^3, multiply by 0.12. SCC = Source Classification Code. ND = no data. NA = not applicable.
[b] Reference 1.
[c] References 2-4. Ranges from 18,000 to 25,000 lb of $CO_2/10^3$gal, depending on carbon content.
[d] Cl = weight % chlorine in fuel. Multiply numeric value by Cl to obtain emission factor. For example, if chlorine content is 3%, Cl = 3.

Table 1.11-4. EMISSION FACTORS FOR SPECIATED METALS FROM WASTE OIL COMBUSTORS[a]

EMISSION FACTOR RATING: D

Pollutant	Small Boilers Emission Factor ($lb/10^3$ gal)[b] (SCC 1-03-013-02)	Space Heaters: Vaporizing Burner Emission Factor ($lb/10^3$ gal)[c] (SCC 1-05-001-14, 1-05-002-14)	Space Heaters: Atomizing Burner Emission Factor ($lb/10^3$ gal)[c] (SCC 1-05-001-13, 1-05-002-13)
Antimony	BDL	3.4 E-04	4.5 E-03
Arsenic	1.1 E-01	2.5 E-03	6.0 E-02
Beryllium	BDL	BDL	1.8 E-03
Cadmium	9.3 E-03	1.5 E-04	1.2 E-02
Chromium	2.0 E-02	1.9 E-01	1.8 E-01
Cobalt	2.1 E-04	5.7 E-03	5.2 E-03
Manganese	6.8 E-02	2.2 E-03	5.0 E-02
Nickel	1.1 E-02	5.0 E-02	1.6 E-01
Selenium	BDL	BDL	BDL
Phosphorous	ND	3.6 E-02	ND

[a] Pollutants in this table represent metal species measured for waste oil combustors. Other metal species may also have been emitted but were either not measured or were present at concentrations below analytical detection limits. Units are lb of pollutant/10^3 gallons of waste oil burned. To convert from $lb/10^3$ gallons to kg/m^3, multiply by 0.12. BDL = below detection limit. SCC = Source Classification Code. ND = no data.

[b] Reference 4.

[c] References 4-5.

Table 1.11-5. EMISSION FACTORS FOR SPECIATED ORGANIC COMPOUNDS FROM WASTE OIL COMBUSTORS[a]

EMISSION FACTOR RATING: D

Pollutant	Space Heaters: Vaporizing Burner (SCC 1-05-001-14, 1-05-002-14) Emission Factor (lb/10^3 gal)	Space Heaters: Atomizing Burner (SCC 1-05-001-13, 1-05-002-13) Emission Factor (lb/10^3 gal)
Phenol	2.4 E-03	2.8 E-05
Dichlorobenzene	8.0 E-07	ND
Naphthalene	1.3 E-02	9.2 E-05
Phenanthrene/anthracene	1.1 E-02	1.0 E-04
Dibutylphthalate	ND	3.4 E-05
Butylbenzylphthalate	5.1 E-04	ND
Bis(2-ethylhexyl)phthalate	2.2 E-03	ND
Pyrene	7.1 E-03	8.3 E-06
Benz(a)anthracene/chrysene	4.0 E-03	ND
Benzo(a)pyrene	4.0 E-03	ND
Trichloroethylene	ND	ND

[a] Reference 4. Pollutants in this table represent organic species measured for waste oil combustors. Other organic species may also have been emitted but were either not measured or were present at concentrations below analytical detection limits. Units are lb of pollutant/10^3 gallons of waste oil burned. To convert from lb/10^3 gallons to kg/m^3, multiply by 0.12. SCC = Source Classification Code. ND = no data.

References For Section 1.11

1. *Emission Factor Documentation For AP-42 Section 1.11, Waste Oil Combustion (Draft)*, Technical Support Division, Office of Air Quality Planning and Standards, U. S. Environmental Protection Agency, Research Triangle Park, NC, April 1993.

2. *Environmental Characterization Of Disposal Of Waste Oils In Small Combustors*, EPA-600/2-84-150, U. S. Environmental Protection Agency, Cincinnati, OH, September 1984.

3. *Used Oil Burned As A Fuel*, EPA-SW-892, U. S. Environmental Protection Agency, Washington, DC, August 1980.

4. *The Fate Of Hazardous And Nonhazardous Wastes In Used Oil Disposal And Recycling*, DOE/BC/10375-6, U. S. Department of Energy, Bartlesville, OK, October 1983.

5. "Comparisons of Air Pollutant Emissions from Vaporizing and Air Atomizing Waste Oil Heaters", *Journal Of The Air Pollution Control Association*, 33(7), July 1983.

6. "Waste Oil Combustion: An Environmental Case Study", Presented at the 75th Annual Meeting of the Air Pollution Control Association, June 1982.

7. *Chemical Analysis Of Waste Crankcase Oil Combustion Samples*, EPA600/7-83-026, U. S. Environmental Protection Agency, Research Triangle Park, NC, April 1983.

2. SOLID WASTE DISPOSAL

As defined in the Solid Waste Disposal Act of 1965, the term "solid waste" means garbage, refuse, and other discarded solid materials, including solid-waste materials resulting from industrial, commercial, and agricultural operations, and from community activities. It includes both combustibles and noncombustibles.

Solid waste may be classified into four general categories: urban, industrial, mineral, and agricultural. Urban waste is only a relatively small part of the total solid wastes produced, but this category has a large potential for air pollution. The majority of urban refuse is buried in landfills to decompose anaerobically, mostly into global warming gases but also into a number of reduced sulfur compounds. In heavily populated areas, solid waste is often burned to reduce the bulk of material requiring final disposal. Medical waste, depending on its source, may be considered either urban or industrial waste. Because of the infection potential and special characteristics of medical waste, it requires special disposal methods. Sludges can be either urban or industrial and, because of their unique characteristics, they also require special disposal methods. Agricultural wastes are unique in the volume of organic material that may need to be disposed of in a short time. Therefore, unique disposal methods may be used for this solid waste category.

2.1 Refuse Combustion

Refuse combustion involves the burning of garbage and other nonhazardous solids, commonly called municipal solid waste (MSW). Types of combustion devices used to burn refuse include single chamber units, multiple chamber units, and trench incinerators.

2.1.1 General[1-3]

As of January 1992, there were over 160 municipal waste combustor (MWC) plants operating in the United States with capacities greater than 36 megagrams per day (Mg/day) (40 tons per day [tpd]), with a total capacity of approximately 100,000 Mg/day (110,000 tpd of MSW).[1] It is projected that by 1997, the total MWC capacity will approach 150,000 Mg/day (165,000 tpd), which represents approximately 28 percent of the estimated total amount of MSW generated in the United States by the year 2000.

Federal regulations for MWCs are currently under 3 subparts of 40 CFR Part 60. Subpart E covers MWC units that began construction after 1971 and have capacities to combust over 45 Mg/day (50 tpd) of MSW. Subpart Ea establishes new source performance standards (NSPS) for MWC units which began construction or modification after December 20, 1989 and have capacities over 225 Mg/day (250 tpd). An emission guideline (EG) was established under Subpart Ca covering MWC units which began construction or modification prior to December 20, 1989 and have capacities of greater than 225 Mg/day (250 tpd). The Subpart Ea and Ca regulations were promulgated on February 11, 1991.

Subpart E includes a standard for particulate matter (PM). Subparts Ca and Ea currently establish standards for PM, tetra- through octa- chlorinated dibenzo-p-dioxin/chlorinated dibenzofurans (CDD/CDF), hydrogen chloride (HCl), sulfur dioxide (SO_2), nitrogen oxides (NO_x) (Subpart Ea only), and carbon monoxide (CO). Additionally, standards for mercury (Hg), lead (Pb), cadmium (Cd), and NO_x (for Subpart Ca) are currently being considered for new and existing facilities, as required by Section 129 of the Clean Air Act Amendments (CAAA) of 1990.

In addition to requiring revisions of the Subpart Ca and Ea regulations to include these additional pollutants, Section 129 also requires the EPA to review the standards and guidelines for the pollutants currently covered under these subparts. It is likely that the revised regulations will be more stringent. The regulations are also being expanded to cover new and existing MWC facilities with capacities of 225 Mg/day (250 tpd) or less. The revised regulations will likely cover facilities with capacities as low as 18 to 45 Mg/day (20 to 50 tpd). These facilities are currently subject only to State regulations.

2.1.1.1 Combustor Technology -

There are 3 main classes of technologies used to combust MSW: mass burn, refuse-derived fuel (RDF), and modular combustors. This section provides a general description of these 3 classes of combustors. Section 2.1.2 provides more details regarding design and operation of each combustor class.

With mass burn units, the MSW is combusted without any preprocessing other than removal of items too large to go through the feed system. In a typical mass burn combustor, refuse is placed on a grate that moves through the combustor. Combustion air in excess of stoichiometric amounts is

supplied both below (underfire air) and above (overfire air) the grate. Mass burn combustors are usually erected at the site (as opposed to being prefabricated at another location), and range in size from 46 to 900 Mg/day (50 to 1,000 tpd) of MSW throughput per unit. The mass burn combustor category can be divided into mass burn waterwall (MB/WW), mass burn rotary waterwall combustor (MB/RC), and mass burn refractory wall (MB/REF) designs. Mass burn waterwall designs have water-filled tubes in the furnace walls that are used to recover heat for production of steam and/or electricity. Mass burn rotary waterwall combustors use a rotary combustion chamber constructed of water-filled tubes followed by a waterwall furnace. Mass burn refractory designs are older and typically do not include any heat recovery. Process diagrams for a typical MB/WW combustor, a MB/RC combustor, and one type of MB/REF combustor are presented in Figure 2.1-1, Figure 2.1-2, and Figure 2.1-3, respectively.

Refuse-derived fuel combustors burn processed waste that varies from shredded waste to finely divided fuel suitable for co-firing with pulverized coal. Combustor sizes range from 290 to 1,300 Mg/day (320 to 1,400 tpd). A process diagram for a typical RDF combustor is shown in Figure 2.1-4. Waste processing usually consists of removing noncombustibles and shredding, which generally raises the heating value and provides a more uniform fuel. The type of RDF used depends on the boiler design. Most boilers designed to burn RDF use spreader stokers and fire fluff RDF in a semi-suspension mode. A subset of the RDF technology is fluidized bed combustors (FBC).

Modular combustors are similar to mass burn combustors in that they burn waste that has not been pre-processed, but they are typically shop fabricated and generally range in size from 4 to 130 Mg/day (5 to 140 tpd) of MSW throughput. One of the most common types of modular combustors is the starved air or controlled air type, which incorporates two combustion chambers. A process diagram of a typical modular starved-air (MOD/SA) combustor is presented in Figure 2.1-5. Air is supplied to the primary chamber at sub-stoichiometric levels. The incomplete combustion products (CO and organic compounds) pass into the secondary combustion chamber where additional air is added and combustion is completed. Another type of modular combustor design is the modular excess air (MOD/EA) combustor which consists of 2 chambers as with MOD/SA units, but is functionally similar to mass burn units in that it uses excess air in the primary chamber.

2.1.2 Process Description[4]

Types of combustors described in this section include:

- Mass burn waterwall,
- Mass burn rotary waterwall,
- Mass burn refractory wall,
- Refuse-derived fuel-fired,
- Fluidized bed,
- Modular starved air, and
- Modular excess air.

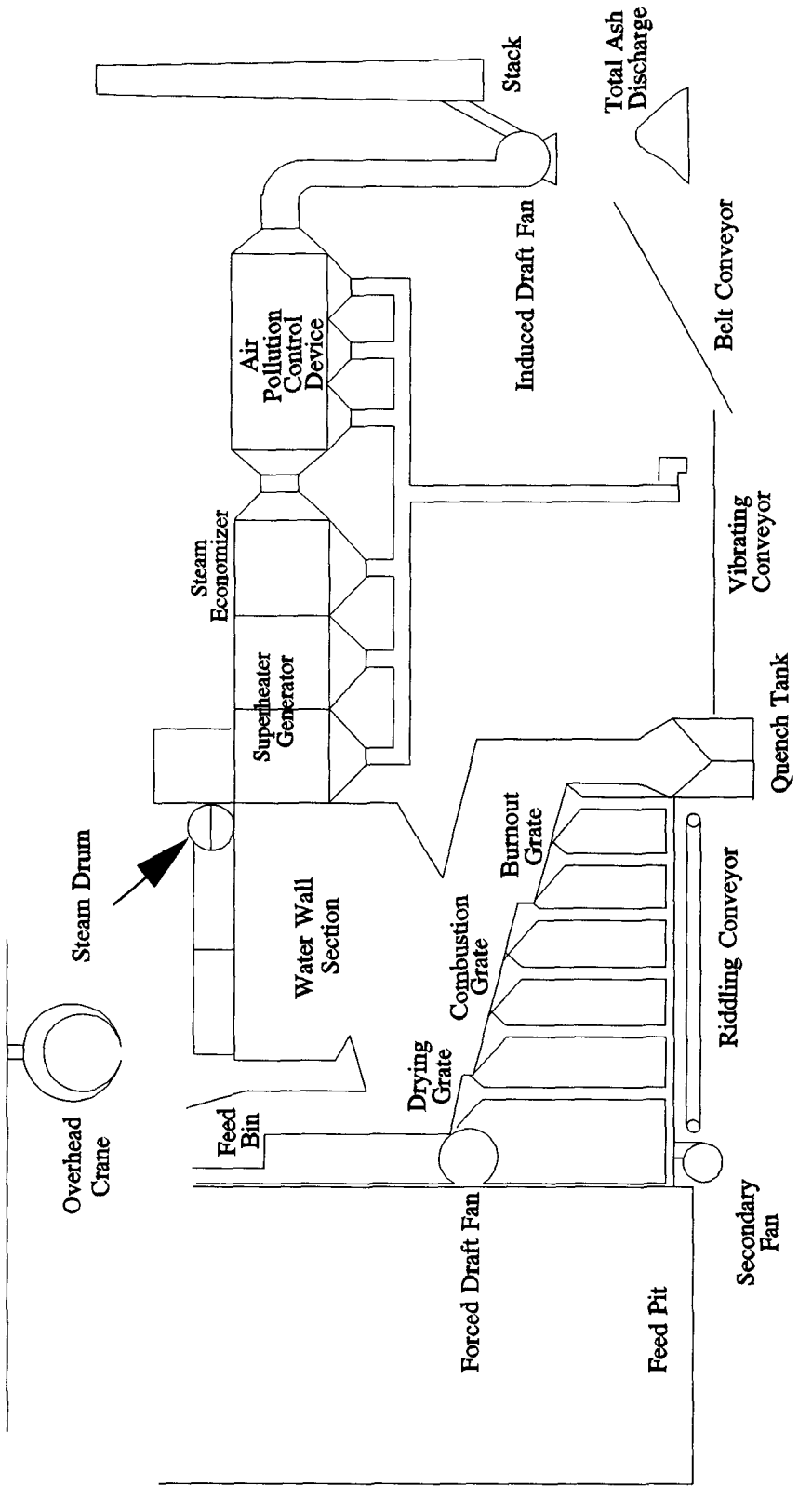

Figure 2.1-1. Typical mass burn waterfall combustor.

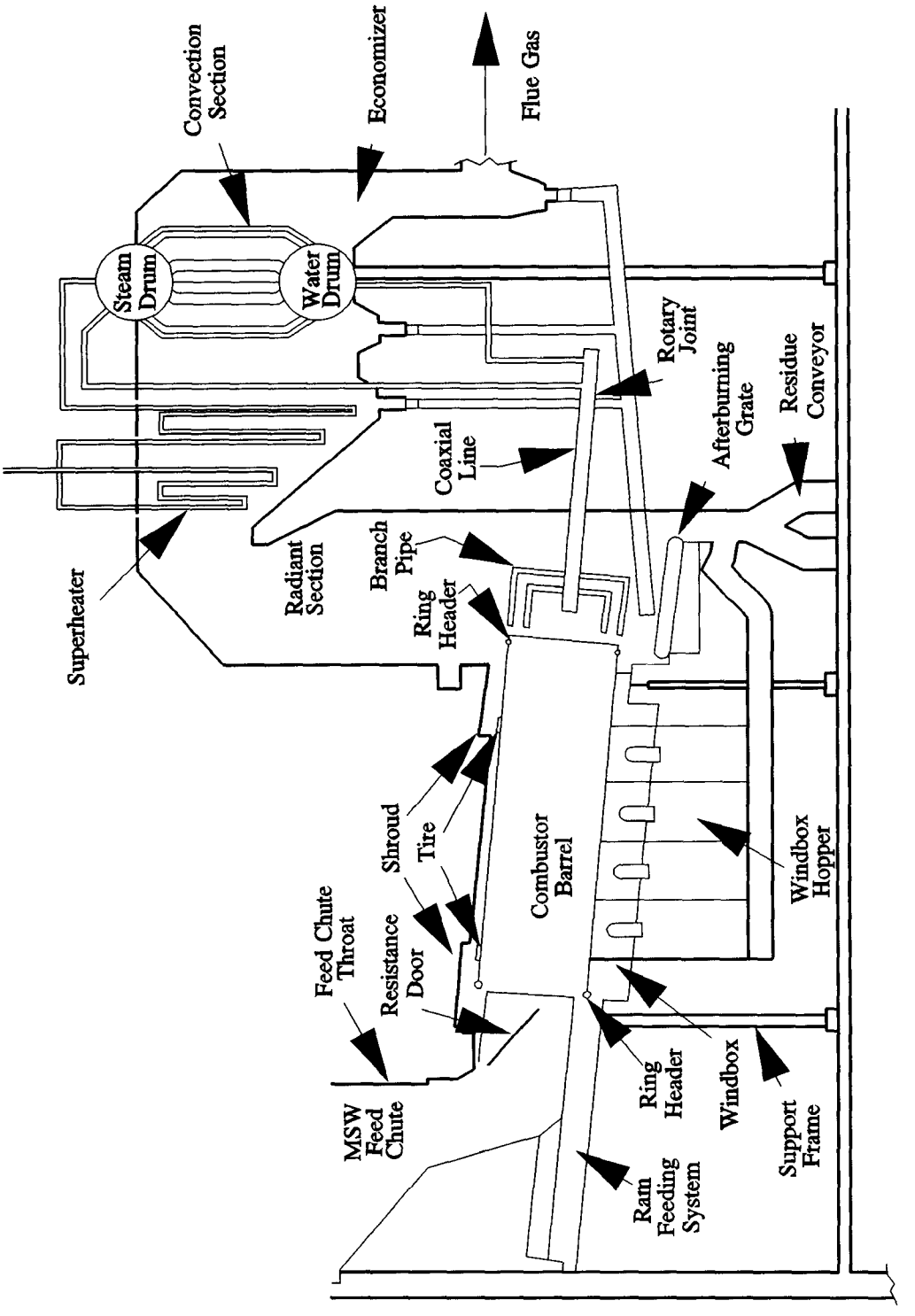

Figure 2.1-2. Simplified process flow diagram for a rotary waterwall combustor.

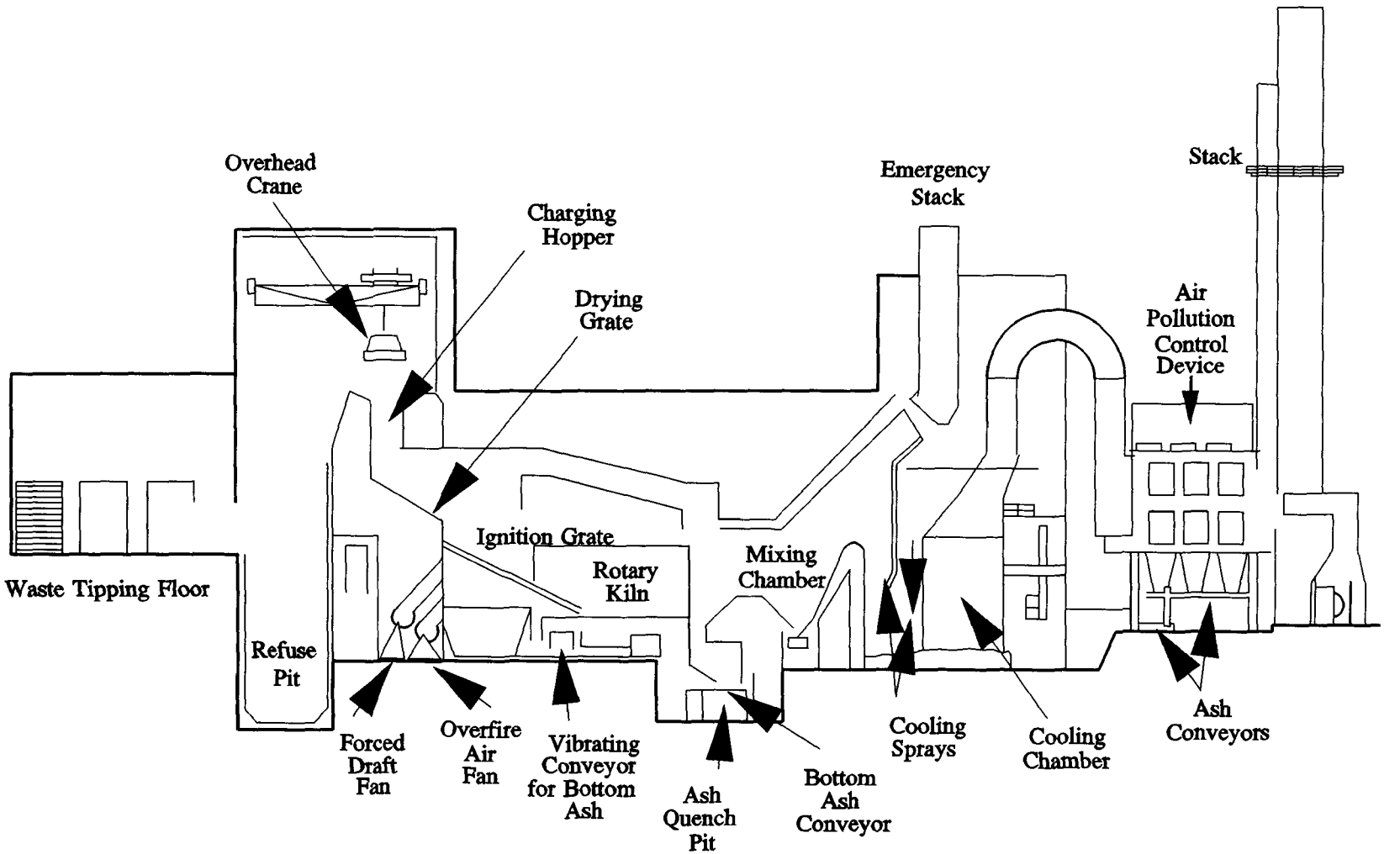

Figure 2.1-3. Mass burn refractory wall combustor with grate/rotary kiln.

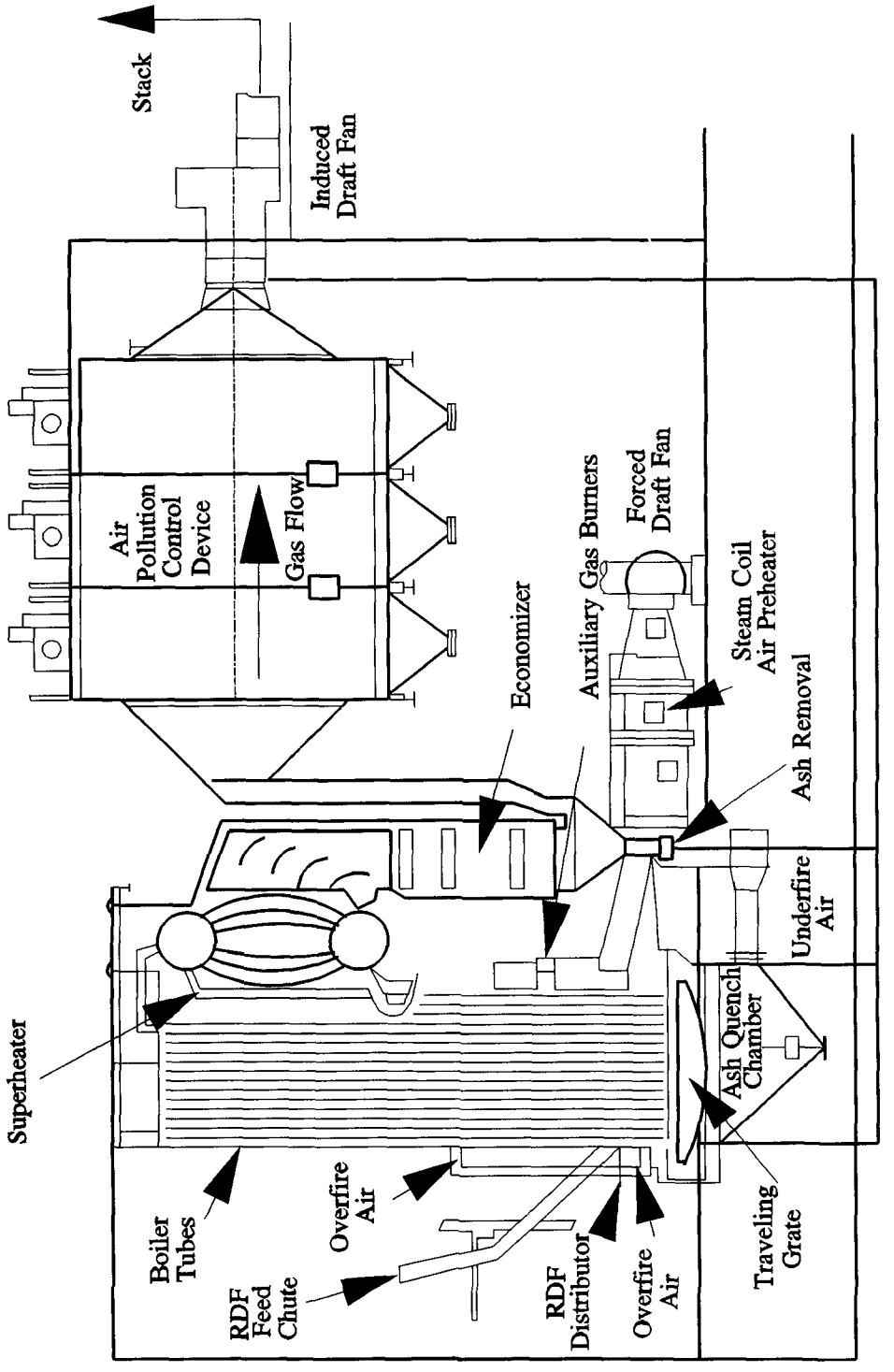

Figure 2.1-4. Typical RDF-fired spreader stoker boiler.

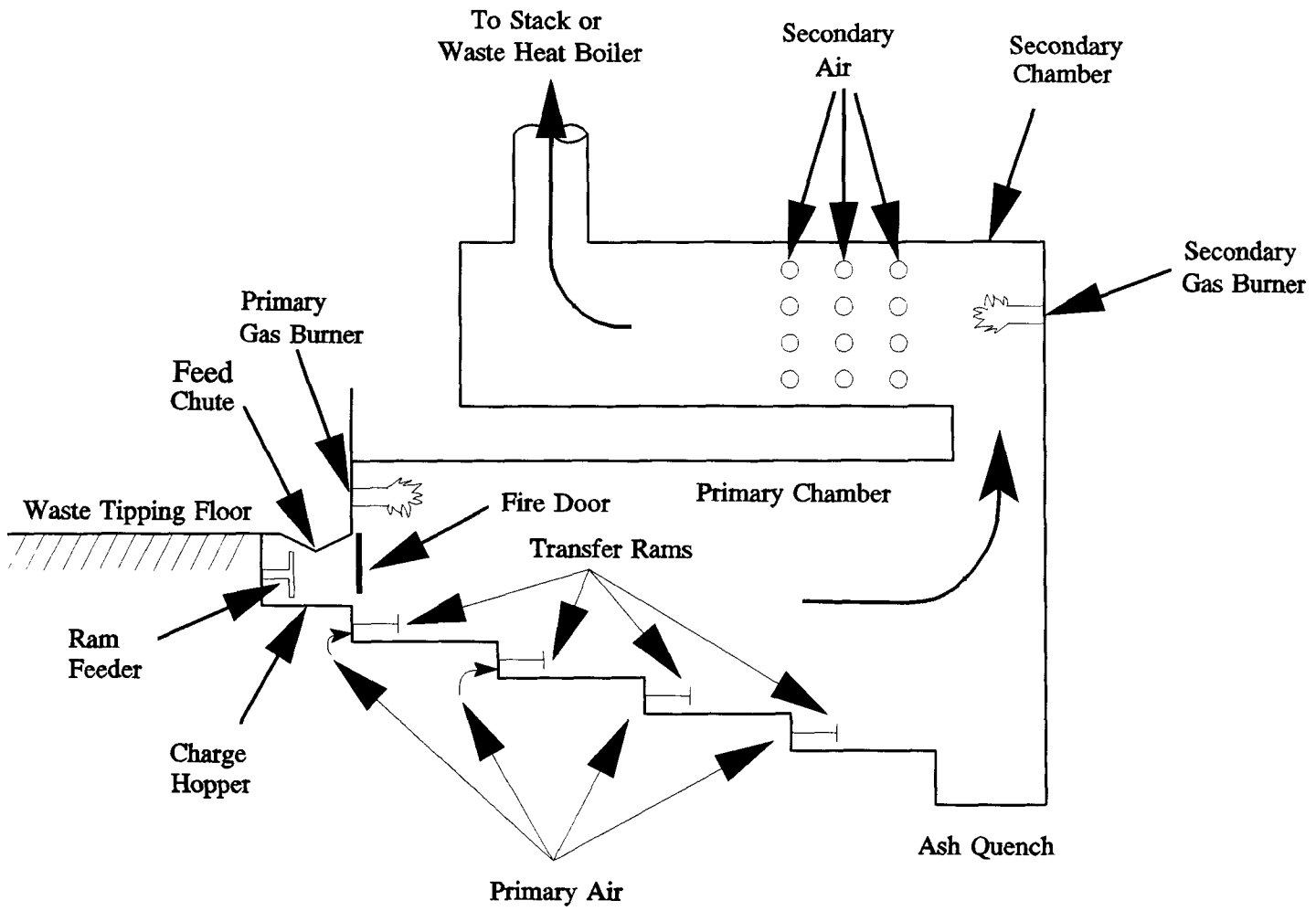

Figure 2.1-5. Typical modular starved-air combustor with transfer rams.

2.1.2.1 Mass Burn Waterwall Combustors -

The MB/WW design represents the predominant technology in the existing population of large MWCs, and it is expected that over 50 percent of new units will be MB/WW designs. In MB/WW units, the combustor walls are constructed of metal tubes that contain circulating pressurized water used to recover heat from the combustion chamber. In the lower actively burning region of the chamber where corrosive conditions may exist, the walls are generally lined with castable refractory. Heat is also recovered in the convective sections (i. e., superheater, economizer) of the combustor.

With this type of system, unprocessed waste (after removal of large, bulky items) is delivered by an overhead crane to a feed hopper, which conveys the waste into the combustion chamber. Earlier MB/WW designs utilized gravity feeders, but it is now more typical to feed by means of single or dual hydraulic rams.

Nearly all modern MB/WW facilities utilize reciprocating grates or roller grates to move the waste through the combustion chamber. The grates typically include 3 sections. On the initial grate section, referred to as the drying grate, the moisture content of the waste is reduced prior to ignition. The second grate section, referred to as the burning grate, is where the majority of active burning takes place. The third grate section, referred to as the burnout or finishing grate, is where remaining combustibles in the waste are burned. Smaller units may have only 2 individual grate sections. Bottom ash is discharged from the finishing grate into a water-filled ash quench pit or ram discharger. From there, the moist ash is discharged to a conveyor system and transported to an ash load-out or storage area prior to disposal. Dry ash systems have been used in some designs, but their use is not widespread.

Combustion air is added from beneath the grate by way of underfire air plenums. The majority of MB/WW systems supply underfire air to the individual grate sections through multiple plenums, which enhance the ability to control burning and heat release from the waste bed. Overfire air is injected through rows of high-pressure nozzles located in the side walls of the combustor to oxidize fuel-rich gases evolved from the bed and complete the combustion process. Properly designed and operated overfire air systems are essential for good mixing and burnout of organics in the flue gas. Typically, MB/WW MWCs are operated with 80 to 100 percent excess air.

The flue gas exits the combustor and passes through additional heat recovery sections to one or more air pollution control devices (APCD). The types of APCDs that may be used are discussed in Section 2.1.4.

2.1.2.2 Mass Burn Rotary Waterwall Combustors -

A more unique mass burn design is the MB/RC. Plants of this design range in size from 180 to 2,400 Mg/day (200 to 2,700 tpd), with typically 2 or 3 units per plant. This type of system uses a rotary combustion chamber. Following pre-sorting of objects too large to fit in the combustor, the waste is ram fed to the inclined rotary combustion chamber, which rotates slowly, causing the waste to advance and tumble as it burns. Underfire air is injected through the waste bed, and overfire air is provided above the waste bed. Bottom ash is discharged from the rotary combustor to an afterburner grate and then into a wet quench pit. From there, the moist ash is conveyed to an ash load-out or storage area prior to disposal.

Approximately 80 percent of the combustion air is provided along the rotary combustion chamber length, with most of the air provided in the first half of the chamber. The rest of the combustion air is supplied to the afterburner grate and above the rotary combustor outlet in the boiler. The MB/RC operates at about 50 percent excess air, compared with 80 to 100 percent for typical MB/WW firing systems. Water flowing through the tubes in the rotary chamber recovers heat from

combustion. Additional heat recovery occurs in the boiler waterwall, superheater, and economizer. From the economizer, the flue gas is typically routed to APCDs.

2.1.2.3 Mass Burn Refractory Wall Combustors -

Prior to 1970 there were numerous MB/REF MWCs in operation. The purpose of these plants was to achieve waste reduction; energy recovery was generally not incorporated in their design. Most of the roughly 25 MB/REF plants that still operate or that were built in the 1970s and 1980s use electrostatic precipitators (ESPs) to reduce PM emissions, and several have heat recovery boilers. Most MB/REF combustors have unit sizes of 90 to 270 Mg/day (100 to 300 tpd). It is not expected that additional plants of this design will be built in the United States.

The MB/REF combustors comprise several designs. One design involves a batch-fed upright combustor, which may be cylindrical or rectangular in shape. A second design is based on a rectangular combustion chamber with a traveling, rocking, or reciprocating grate. This type of combustor is continuously fed and operates in an excess air mode. If the waste is moved on a traveling grate, it is not sufficiently aerated as it advances through the combustor. As a result, waste burnout or complete combustion is inhibited by fuel bed thickness, and there is considerable potential for unburned waste to be discharged into the bottom ash pit. Rocking and reciprocating grate systems stir and aerate the waste bed as it advances through the combustion chamber, thereby improving contact between the waste and combustion air and increasing the burnout of combustibles. The system generally discharges the ash at the end of the grate to a water quench pit for collection and disposal in a landfill.

Because MB/REF combustors do not contain a heat transfer medium (such as the waterwalls that are present in modern energy recovery units), they typically operate at higher excess air rates (150 to 300 percent) than MB/WW combustors (80 to 100 percent). The higher excess air levels are required to prevent excessive temperatures, which can result in refractory damage, slagging, fouling, and corrosion problems. One adverse effect of higher excess air levels is the potential for increased carryover of PM from the combustion chamber and, ultimately, increased stack emission rates. High PM carryover may also contribute to increased CDD/CDF emissions by providing increased surface area for downstream catalytic formation to take place. A second problem is the potential for high excess air levels to quench (cool) the combustion reactions, preventing thermal destruction of organic species.

An alternate, newer MB/REF combustor is the Volund design (Figure 2.1-3 presents this MB/REF design). This design minimizes some of the problems of other MB/REF systems. A refractory arch is installed above the combustion zone to reduce radiant heat losses and improve solids burnout. The refractory arch also routes part of the rising gases from the drying and combustion grates through a gas by-pass duct to the mixing chamber. There the gas is mixed with gas from the burnout grate or kiln. Bottom ash is conveyed to an ash quench pit. Volund MB/REF combustors operate with 80 to 120 percent excess air, which is more in line with excess air levels in the MB/WW designs. As a result, lower CO levels and better organics destruction are achievable, as compared to other MB/REF combustors.

2.1.2.4 Refuse-derived Fuel Combustors -

Refuse-derived fuel combustors burn MSW that has been processed to varying degrees, from simple removal of bulky and noncombustible items accompanied by shredding, to extensive processing to produce a finely divided fuel suitable for co-firing in pulverized coal-fired boilers. Processing MSW to RDF generally raises the heating value of the waste because many of the noncombustible items are removed.

A set of standards for classifying RDF types has been established by the American Society for Testing and Materials. The type of RDF used is dependent on the boiler design. Boilers that are designed to burn RDF as the primary fuel usually utilize spreader stokers and fire fluff RDF in a semi-suspension mode. This mode of feeding is accomplished by using an air swept distributor, which allows a portion of the RDF to burn in suspension and the remainder to be burned out after falling on a horizontal traveling grate. The number of RDF distributors in a single unit varies directly with unit capacity. The distributors are normally adjustable so that the trajectory of the waste feed can be varied. Because the traveling grate moves from the rear to the front of the furnace, distributor settings are adjusted so that most of the waste lands on the rear two-thirds of the grate. This allows more time for combustion to be completed on the grate. Bottom ash drops into a water-filled quench chamber. Some traveling grates operate at a single speed, but most can be manually adjusted to accommodate variations in burning conditions. Underfire air is normally preheated and introduced beneath the grate by a single plenum. Overfire air is injected through rows of high-pressure nozzles, providing a zone for mixing and completion of the combustion process. These combustors typically operate at 80 to 100 percent excess air.

Due to the basic design of the semi-suspension feeding systems, PM levels at the inlet to the pollution control device are typically double those of mass burn systems and more than an order of magnitude higher than MOD/SA combustors. The higher particulate loadings may contribute to the catalytic formation of CDD/CDF. However, controlled Hg emissions from these plants are considerably lower than from mass burn plants as a result of the higher levels of carbon present in the PM carryover, as Hg adsorbs onto the carbon and can be subsequently captured by the PM control device.

Pulverized coal (PC)-fired boilers can co-fire fluff RDF or powdered RDF. In a PC-fired boiler that co-fires fluff with pulverized coal, the RDF is introduced into the combustor by air transport injectors that are located above or even with the coal nozzles. Due to its high moisture content and large particle size, RDF requires a longer burnout time than coal. A significant portion of the larger, partially burned particles disengage from the gas flow and fall onto stationary drop grates at the bottom of the furnace where combustion is completed. Ash that accumulates on the grate is periodically dumped into the ash hopper below the grate. Refuse-derived fuel can also be co-fired with coal in stoker-fired boilers.

2.1.2.5 Fluidized Bed Combustors -

In an FBC, fluff or pelletized RDF is combusted on a turbulent bed of noncombustible material such as limestone, sand, or silica. In its simplest form, an FBC consists of a combustor vessel equipped with a gas distribution plate and underfire air windbox at the bottom. The combustion bed overlies the gas distribution plate. The combustion bed is suspended or "fluidized" through the introduction of underfire air at a high flow rate. The RDF may be injected into or above the bed through ports in the combustor wall. Other wastes and supplemental fuel may be blended with the RDF outside the combustor or added into the combustor through separate openings. Overfire air is used to complete the combustion process.

There are 2 basic types of FBC systems: bubbling bed and circulating bed. With bubbling bed combustors, most of the fluidized solids are maintained near the bottom of the combustor by using relatively low air fluidization velocities. This helps reduce the entrainment of solids from the bed into the flue gas, minimizing recirculation or reinjection of bed particles. In contrast, circulating bed combustors operate at relatively high fluidization velocities to promote carryover of solids into the upper section of the combustor. Combustion occurs in both the bed and upper section of the combustor. By design, a fraction of the bed material is entrained in the combustion gas and enters a

cyclone separator which recycles unburned waste and inert particles to the lower bed. Some of the ash is removed from the cyclone with the solids from the bed.

Good mixing is inherent in the FBC design. Fluidized bed combustors have very uniform gas temperatures and mass compositions in both the bed and in the upper region of the combustor. This allows the FBCs to operate at lower excess air and temperature levels than conventional combustion systems. Waste-fired FBCs typically operate at excess air levels between 30 and 100 percent and at bed temperatures around 815°C (1,500°F). Low temperatures are necessary for waste-firing FBCs because higher temperatures lead to bed agglomeration.

2.1.2.6 Modular Starved-air (Controlled-air) Combustors -

In terms of number of facilities, MOD/SA combustors represent a large segment of the existing MWC population. However, because of their small sizes, they account for only a small percent of the total capacity. The basic design of a MOD/SA combustor consists of 2 separate combustion chambers, referred to as the "primary" and "secondary" chambers. Waste is batch-fed to the primary chamber by a hydraulically activated ram. The charging bin is filled by a front end loader or other means. Waste is fed automatically on a set frequency, with generally 6 to 10 minutes between charges.

Waste is moved through the primary combustion chamber by either hydraulic transfer rams or reciprocating grates. Combustors using transfer rams have individual hearths upon which combustion takes place. Grate systems generally include 2 separate grate sections. In either case, waste retention times in the primary chamber are long, lasting up to 12 hours. Bottom ash is usually discharged to a wet quench pit.

The quantity of air introduced into the primary chamber defines the rate at which waste burns. Combustion air is introduced in the primary chamber at sub-stoichiometric levels, resulting in a flue gas rich in unburned hydrocarbons. The combustion air flow rate to the primary chamber is controlled to maintain an exhaust gas temperature set point, generally 650 to 980°C (1,200 to 1,800°F), which corresponds to about 40 to 60 percent theoretical air.

As the hot, fuel-rich flue gases flow to the secondary chamber, they are mixed with additional air to complete the burning process. Because the temperature of the exhaust gases from the primary chamber is above the autoignition point, completing combustion is simply a matter of introducing air into the fuel-rich gases. The amount of air added to the secondary chamber is controlled to maintain a desired flue gas exit temperature, typically 980 to 1,200°C (1,800 to 2,200°F). Approximately 80 percent of the total combustion air is introduced as secondary air. Typical excess air levels vary from 80 to 150 percent.

The walls of both combustion chambers are refractory lined. Early MOD/SA combustors did not include energy recovery, but a waste heat boiler is common in newer installations, with 2 or more combustion modules manifolded to a single boiler. Combustors with energy recovery capabilities also maintain dump stacks for use in an emergency, or when the boiler and/or air pollution control equipment are not in operation.

Most MOD/SA MWCs are equipped with auxiliary fuel burners located in both the primary and secondary combustion chambers. Auxiliary fuel can be used during startup (many modular units do not operate continuously) or when problems are experienced maintaining desired combustion temperatures. In general, the combustion process is self-sustaining through control of air flow and feed rate, so that continuous co-firing of auxiliary fuel is normally not necessary.

The high combustion temperatures and proper mixing of flue gas with air in the secondary combustion chamber provide good combustion, resulting in relatively low CO and trace organic emissions. Because of the limited amount of combustion air introduced through the primary chamber, gas velocities in the primary chamber and the amount of entrained PM are low. As a result, PM emissions of air pollutants from MOD/SA MWCs are relatively low. Many existing modular systems do not have air pollution controls. This is especially true of the smaller starved-air facilities. A few of the newer MOD/SA MWCs have acid gas/PM controls.

2.1.2.7 Modular Excess Air Combustors -

There are fewer MOD/EA MWCs than MOD/SA MWCs. The design of MOD/EA units is similar to that of MOD/SA units, including the presence of primary and secondary combustion chambers. Waste is batch-fed to the primary chamber, which is refractory-lined. The waste is moved through the primary chamber by hydraulic transfer rams, oscillating grates, or a revolving hearth. Bottom ash is discharged to a wet quench pit. Additional flue gas residence time for fuel/carbon burnout is provided in the secondary chamber, which is also refractory-lined. Energy is typically recovered in a waste heat boiler. Facilities with multiple combustors may have a tertiary chamber where flue gases from each combustor are mixed prior to entering the energy recovery boiler.

Unlike the MOD/SA combustors but similar to MB/REF units, a MOD/EA combustor typically operates at about 100 percent excess air in the primary chamber, but may vary between 50 and 250 percent excess air. The MOD/EA combustors also use recirculated flue gas for combustion air to maintain desired temperatures in the primary and secondary chambers. Due to higher air velocities, PM emissions from MOD/EA combustors are higher than those from MOD/SA combustors and are more similar in concentration to PM emissions from mass burn units. However, NO_x emissions from MOD/EA combustors appear to be lower than from either MOD/SA or mass burn units.

2.1.3 Emissions[4-7]

Depending on the characteristics of the MSW and combustion conditions in the MWC, the following pollutants can be emitted:

- PM,
- Metals (in solid form on PM, except for Hg),
- Acid gases (HCl, SO_2),
- CO,
- NO_x, and
- Toxic organics (most notably CDD/CDF).

A brief discussion on each of the pollutants is provided below, along with discussions on controls used to reduce emissions of these pollutants to the atmosphere.

2.1.3.1 Particulate Matter -

The amount of PM exiting the furnace of an MWC depends on the waste characteristics, the physical nature of the combustor design, and the combustor's operation. Under normal combustion

conditions, solid fly ash particulates formed from inorganic, noncombustible constituents in MSW are released into the flue gas. Most of this particulate is captured by the facility's APCD and are not emitted to the atmosphere.

Particulate matter can vary greatly in size with diameters ranging from less than 1 micrometer to hundreds of micrometers (μm). Fine particulates, having diameters less than $10\mu m$ (known as PM-10), are of increased concern because a greater potential for inhalation and passage into the pulmonary region exists. Further, acid gases, metals, and toxic organics may preferentially adsorb onto particulates in this size range. The NSPS and EG for MWCs regulate total PM, while PM-10 is of interest for State Implementation Plans and when dealing with ambient PM concentrations. In this chapter, "PM" refers to total PM as measured by EPA Reference Method 5.

The level of PM emissions at the inlet of the APCD will vary according the combustor design, air distribution, and waste characteristics. For example, facilities that operate with high underfire/overfire air ratios or relatively high excess air levels may entrain greater quantities of PM and have high PM levels at the APCD inlet. For combustors with multiple-pass boilers that change the direction of the flue gas flow, part of the PM may be removed prior to the APCD. Lastly, the physical properties of the waste being fed and the method of feeding influences PM levels in the flue gas. Typically, RDF units have higher PM carryover from the furnace due to the suspension-feeding of the RDF. However, controlled PM emissions from RDF plants do not vary substantially from other MWCs (i. e., MB/WW), because the PM is efficiently collected in the APCD.

2.1.3.2 Metals -

Metals are present in a variety of MSW streams, including paper, newsprint, yard wastes, wood, batteries, and metal cans. The metals present in MSW are emitted from MWCs in association with PM (e. g., arsenic [As], Cd, chromium [Cr], and Pb) and as vapors, such as Hg. Due to the variability in MSW composition, metal concentrations are highly variable and are essentially independent of combustor type. If the vapor pressure of a metal is such that condensation onto particulates in the flue gas is possible, the metal can be effectively removed by the PM control device. With the exception of Hg, most metals have sufficiently low vapor pressures to result in almost all of the metals being condensed. Therefore, removal in the PM control device for these metals is generally greater than 98 percent. Mercury, on the other hand, has a high vapor pressure at typical APCD operating temperatures, and capture by the PM control device is highly variable. The level of carbon in the fly ash appears to affect the level of Hg control. A high level of carbon in the fly ash can enhance Hg adsorption onto particles removed by the PM control device.

2.1.3.3 Acid Gases -

The chief acid gases of concern from the combustion of MSW are HCl and SO_2. Hydrogen fluoride (HF), hydrogen bromide (HBr), and sulfur trioxide (SO_3) are also generally present, but at much lower concentrations. Concentrations of HCl and SO_2 in MWC flue gases directly relate to the chlorine and sulfur content in the waste. The chlorine and sulfur content vary considerably based on seasonal and local waste variations. Emissions of SO_2 and HCl from MWCs depend on the chemical form of sulfur and chlorine in the waste, the availability of alkali materials in combustion-generated fly ash that act as sorbents, and the type of emission control system used. Acid gas concentrations are considered to be independent of combustion conditions. The major sources of chlorine in MSW are paper and plastics. Sulfur is contained in many constituents of MSW, such as asphalt shingles, gypsum wallboard, and tires. Because RDF processing does not generally impact the distribution of combustible materials in the waste fuel, HCl and SO_2 concentrations for mass burn and RDF units are similar.

2.1.3.4 Carbon Monoxide -

Carbon monoxide emissions result when all of the carbon in the waste is not oxidized to carbon dioxide (CO_2). High levels of CO indicate that the combustion gases were not held at a sufficiently high temperature in the presence of oxygen (O_2) for a long enough time to convert CO to CO_2. As waste burns in a fuel bed, it releases CO, hydrogen (H_2), and unburned hydrocarbons. Additional air then reacts with the gases escaping from the fuel bed to convert CO and H_2 to CO_2 and H_2O. Adding too much air to the combustion zone will lower the local gas temperature and quench (retard) the oxidation reactions. If too little air is added, the probability of incomplete mixing increases, allowing greater quantities of unburned hydrocarbons to escape the furnace. Both of the conditions would result in increased emissions of CO.

Because O_2 levels and air distributions vary among combustor types, CO levels also vary among combustor types. For example, semi-suspension-fired RDF units generally have higher CO levels than mass burn units, due to the effects of carryover of incompletely combusted materials into low temperature portions of the combustor, and, in some cases, due to instabilities that result from fuel feed characteristics.

Carbon monoxide concentration is a good indicator of combustion efficiency, and is an important criterion for indicating instabilities and nonuniformities in the combustion process. It is during unstable combustion conditions that more carbonaceous material is available and higher CDD/CDF and organic hazardous air pollutant levels occur. The relationship between emissions of CDD/CDF and CO indicates that high levels of CO (several hundred parts per million by volume [ppmv]), corresponding to poor combustion conditions, frequently correlate with high CDD/CDF emissions. When CO levels are low, however, correlations between CO and CDDs/CDFs are not well defined (due to the fact that many mechanisms may contribute to CDD/CDF formation), but CDD/CDF emissions are generally lower.

2.1.3.5 Nitrogen Oxides -

Nitrogen oxides are products of all fuel/air combustion processes. Nitric oxide (NO) is the primary component of NO_x; however, nitrogen dioxide (NO_2) and nitrous oxide (N_2O) are also formed in smaller amounts. The combination of the compounds is referred to as NO_x. Nitrogen oxides are formed during combustion through (1) oxidation of nitrogen in the waste, and (2) fixation of atmospheric nitrogen. Conversion of nitrogen in the waste occurs at relatively low temperatures (less than 1,090°C [2,000°F]), while fixation of atmospheric nitrogen occurs at higher temperatures. Because of the relatively low temperatures at which MWC furnaces operate, 70 to 80 percent of NO_x formed in MWCs is associated with nitrogen in the waste.

2.1.3.6 Organic Compounds -

A variety of organic compounds, including CDDs/CDFs, chlorobenzene (CB), polychlorinated biphenyls (PCBs), chlorophenols (CPs), and polyaromatic hydrocarbons (PAHs), are present in MSW or can be formed during the combustion and post-combination processes. Organics in the flue gas can exist in the vapor phase or can be condensed or absorbed on fine particulates. Control of organics is accomplished through proper design and operation of both the combustor and the APCDs.

Based on potential health effects, CDD/CDF has been a focus of many research and regulatory activities. Due to toxicity levels, attention is most often placed on levels of CDDs/CDFs in the tetra- through octa- homolog groups and specific isomers within those groups that have chlorine substituted in the 2, 3, 7, and 8 positions. As noted earlier, the NSPS and EG for MWCs regulate the total tetra- through octa-CDDs/CDFs.

2.1.4 Controls[8-10]

A wide variety of control technologies are used to control emissions from MWCs. The control of PM, along with metals that have adsorbed onto the PM, is most frequently accomplished through the use of an ESP or fabric filter (FF). Although other PM control technologies (e. g., cyclones, electrified gravel beds, and venturi scrubbers) are available, they are seldom used on existing systems, and it is anticipated that they will not be frequently used in future MWC systems. The control of acid gas emissions (i. e., SO_2 and HCl) is most frequently accomplished through the application of acid gas control technologies such as spray drying or dry sorbent injection, followed by a high-efficiency PM control device. Some facilities use a wet scrubber to control acid gases. It is anticipated that dry systems (spray drying and dry sorbent injection) will be more widely used than wet scrubbers on future U. S. MWC systems. Each of these technologies is discussed in more detail below.

2.1.4.1 Electrostatic Precipitators -

Electrostatic precipitators consist of a series of high-voltage (20 to 100 kilojoules per coulomb [20 to 100 kilovolts]) discharge electrodes and grounded metal plates through which PM-laden flue gas flows. Negatively charged ions formed by this high-voltage field (known as a "corona") attach to PM in the flue gas, causing the charged particles to migrate toward, and be collected on, the grounded plates. The most common types of ESPs used by MWCs are (1) plate wire units in which the discharge electrode is a bottom weighted or rigid wire, and (2) flat plate units which use flat plates rather than wires as the discharge electrode.

As a general rule, the greater the amount of collection plate area, the greater the ESP's PM collection efficiency. Once the charged particles are collected on the grounded plates, the resulting dust layer is removed from the plates by rapping, washing, or some other method and collected in a hopper. When the dust layer is removed, some of the collected PM becomes re-entrained in the flue gas. To ensure good PM collection efficiency during plate cleaning and electrical upsets, ESPs have several fields located in series along the direction of flue gas flow that can be energized and cleaned independently. Particles re-entrained when the dust layer is removed from one field can be recollected in a downstream field. Because of this phenomena, increasing the number of fields generally improves PM removal efficiency.

Small particles generally have lower migration velocities than large particles and are therefore more difficult to collect. This factor is especially important to MWCs because of the large amount of total fly ash smaller than 1 μm. As compared to pulverized coal fired combustors, in which only 1 to 3 percent of the fly ash is generally smaller than 1 μm, 20 to 70 percent of the fly ash at the inlet of the PM control device for MWCs is reported to be smaller than 1 μm. As a result, effective collection of PM from MWCs requires greater collection areas and lower flue gas velocities than many other combustion types.

As an approximate indicator of collection efficiency, the specific collection area (SCA) of an ESP is frequently used. The SCA is calculated by dividing the collecting electrode plate area by the flue gas flow rate and is expressed as square meters per 304.8 cubic meters per minute (square feet per 1000 cubic feet per minute) of flue gas. In general, the higher the SCA, the higher the collection efficiency. Most ESPs at newer MWCs have SCAs in the range of 400 to 600. When estimating emissions from ESP-equipped MWCs, the SCA of the ESP should be taken into consideration. Not all ESPs are designed equally and performance of different ESPs will vary.

2.1.4.2 Fabric Filters -

Fabric filters are also used for PM and metals control, particularly in combination with acid gas control and flue gas cooling. Fabric filters (also known as "baghouses") remove PM by passing flue gas through a porous fabric that has been sewn into a cylindrical bag. Multiple individual filter bags are mounted in an arranged compartment. A complete FF, in turn, consists of 4 to 16 individual compartments that can be independently operated.

As the flue gas flows through the filter bags, particulate is collected on the filter surface, mainly through inertial impaction. The collected particulate builds up on the bag, forming a filter cake. As the thickness of the filter cake increases, the pressure drop across the bag also increases. Once pressure drop across the bags in a given compartment becomes excessive, that compartment is generally taken off-line, mechanically cleaned, and then placed back on-line.

Fabric filters are generally differentiated by cleaning mechanisms. Two main filter cleaning mechanisms are used: reverse-air and pulse-jet. In a reverse-air FF, flue gas flows through unsupported filter bags, leaving the particulate on the inside of the bags. The particulate builds up to form a particulate filter cake. Once excessive pressure drop across the filter cake is reached, air is blown through the filter in the opposite direction, the filter bag collapses, and the filter cake falls off and is collected. In a pulse-jet FF, flue gas flows through supported filter bags leaving particulate on the outside of the bags. To remove the particulate filter cake, compressed air is pulsed through the inside of the filter bag, the filter bag expands and collapses to its pre-pulsed shape, and the filter cake falls off and is collected.

2.1.4.3 Spray Drying -

Spray dryers (SD) are the most frequently used acid gas control technology for MWCs in the United States. When used in combination with an ESP or FF, the system can control CDD/CDF, PM (and metals), SO_2, and HCl emissions from MWCs. Spray dryer/fabric filter systems are more common than SD/ESP systems and are used mostly on new, large MWCs. In the spray drying process, lime slurry is injected into the SD through either a rotary atomizer or dual-fluid nozzles. The water in the slurry evaporates to cool the flue gas, and the lime reacts with acid gases to form calcium salts that can be removed by a PM control device. The SD is designed to provide sufficient contact and residence time to produce a dry product before leaving the SD adsorber vessel. The residence time in the adsorber vessel is typically 10 to 15 seconds. The particulate leaving the SD contains fly ash plus calcium salts, water, and unreacted hydrated lime.

The key design and operating parameters that significantly affect SD performance are SD outlet temperature and lime-to-acid gas stoichiometric ratio. The SD outlet approach to saturation temperature is controlled by the amount of water in the slurry. More effective acid gas removal occurs at lower approach to saturation temperatures, but the temperature must be high enough to ensure the slurry and reaction products are adequately dried prior to collection in the PM control device. For MWC flue gas containing significant chlorine, a minimum SD outlet temperature of around 115°C (240°F) is required to control agglomeration of PM and sorbent by calcium chloride. Outlet gas temperature from the SD is usually around 140°C (285°F).

The stoichiometric ratio is the molar ratio of calcium in the lime slurry fed to the SD divided by the theoretical amount of calcium required to completely react with the inlet HCl and SO_2 in the flue gas. At a ratio of 1.0, the moles of calcium are equal to the moles of incoming HCl and SO_2. However, because of mass transfer limitations, incomplete mixing, and differing rates of reaction (SO_2 reacts more slowly than HCl), more than the theoretical amount of lime is generally fed to the SD. The stoichiometric ratio used in SD systems varies depending on the level of acid gas reduction required, the temperature of the flue gas at the SD exit, and the type of PM control device used.

Lime is fed in quantities sufficient to react with the peak acid gas concentrations expected without severely decreasing performance. The lime content in the slurry is generally about 10 percent by weight, but cannot exceed approximately 30 percent by weight without clogging of the lime slurry feed system and spray nozzles.

2.1.4.4 Dry Sorbent Injection -

This type of technology has been developed primarily to control acid gas emissions. However, when combined with flue gas cooling and either an ESP or FF, sorbent injection processes may also control CDD/CDF and PM emissions from MWCs. Two primary subsets of dry sorbent injection technologies exist. The more widely used of these approaches, referred to as duct sorbent injection (DSI), involves injecting dry alkali sorbents into flue gas downstream of the combustor outlet and upstream of the PM control device. The second approach, referred to as furnace sorbent injection (FSI), injects sorbent directly into the combustor.

In DSI, powdered sorbent is pneumatically injected into either a separate reaction vessel or a section of flue gas duct located downstream of the combustor economizer or quench tower. Alkali in the sorbent (generally calcium or sodium) reacts with HCl, HF, and SO_2 to form alkali salts (e. g., calcium chloride [$CaCl_2$], calcium fluoride [CaF_2], and calcium sulfite [$CaSO_3$]). By lowering the acid content of the flue gas, downstream equipment can be operated at reduced temperatures while minimizing the potential for acid corrosion of equipment. Solid reaction products, fly ash, and unreacted sorbent are collected with either an ESP or FF.

Acid gas removal efficiency with DSI depends on the method of sorbent injection, flue gas temperature, sorbent type and feed rate, and the extent of sorbent mixing with the flue gas. Not all DSI systems are of the same design, and performance of the systems will vary. Flue gas temperature at the point of sorbent injection can range from about 150 to 320°C (300 to 600°F) depending on the sorbent being used and the design of the process. Sorbents that have been successfully tested include hydrated lime ($Ca[OH]_2$), soda ash (Na_2CO_3), and sodium bicarbonate ($NaHCO_3$). Based on published data for hydrated lime, some DSI systems can achieve removal efficiencies comparable to SD systems; however, performance is generally lower.

By combining flue gas cooling with DSI, it may be possible to increase CDD/CDF removal through a combination of vapor condensation and adsorption onto the sorbent surface. Cooling may also benefit PM control by decreasing the effective flue gas flow rate (i. e., cubic meters per minute) and reducing the resistivity of individual particles.

Furnace sorbent injection involves the injection of powdered alkali sorbent (either lime or limestone) into the furnace section of a combustor. This can be accomplished by addition of sorbent to the overfire air, injection through separate ports, or mixing with the waste prior to feeding to the combustor. As with DSI, reaction products, fly ash, and unreacted sorbent are collected using an ESP or FF.

The basic chemistry of FSI is similar to DSI. Both use a reaction of sorbent with acid gases to form alkali salts. However, several key differences exist in these 2 approaches. First, by injecting sorbent directly into the furnace (at temperatures of 870 to 1,200°C [1,600 to 2,200°F]) limestone can be calcined in the combustor to form more reactive lime, thereby allowing use of less expensive limestone as a sorbent. Second, at these temperatures, SO_2 and lime react in the combustor, thus providing a mechanism for effective removal of SO_2 at relatively low sorbent feed rates. Third, by injecting sorbent into the furnace rather than into a downstream duct, additional time is available for mixing and reaction between the sorbent and acid gases. Fourth, if a significant portion of the HCl is removed before the flue gas exits the combustor, it may be possible to reduce the formation of

CDD/CDF in latter sections of the flue gas ducting. However, HCl and lime do not react with each other at temperatures above 760°C (1,400°F). This is the flue gas temperature that exists in the convective sections of the combustor. Therefore, HCl removal may be lower than with DSI. Potential disadvantages of FSI include fouling and erosion of convective heat transfer surfaces by the injected sorbent.

2.1.4.5 Wet Scrubbers -

Many types of wet scrubbers have been used for controlling acid gas emissions from MWCs. These include spray towers, centrifugal scrubbers, and venturi scrubbers. Wet scrubbing technology has primarily been used in Japan and Europe. Currently, it is not anticipated that many new MWCs being built in the United States will use this type of acid gas control system. Wet scrubbing normally involves passing the flue gas through an ESP to reduce PM, followed by a 1- or 2-stage absorber system. With single-stage scrubbers, the flue gas reacts with an alkaline scrubber liquid to simultaneously remove HCl and SO_2. With two-stage scrubbers, a low-pH water scrubber for HCl removal is installed upstream of the alkaline SO_2 scrubber. The alkaline solution, typically containing calcium hydroxide ($Ca[OH]_2$), reacts with the acid gas to form salts, which are generally insoluble and may be removed by sequential clarifying, thickening, and vacuum filtering. The dewatered salts or sludges are then disposed.

2.1.4.6 Nitrogen Oxides Control Techniques -

The control of NO_x emissions can be accomplished through either combustion controls or add-on controls. Combustion controls include staged combustion, low excess air (LEA), and flue gas recirculation (FGR). Add-on controls which have been tested on MWCs include selective noncatalytic reduction (SNCR), selective catalytic reduction (SCR), and natural gas reburning.

Combustion controls involve the control of temperature or O_2 to reduce NO_x formation. With LEA, less air is supplied, which lowers the supply of O_2 that is available to react with N_2 in the combustion air. In staged combustion, the amount of underfire air is reduced, which generates a starved-air region. In FGR, cooled flue gas and ambient air are mixed to become the combustion air. This mixing reduces the O_2 content of the combustion air supply and lowers combustion temperatures. Due to the lower combustion temperatures present in MWCs, most NO_x is produced from the oxidation of nitrogen present in the fuel. As a result, combustion modifications at MWCs have generally shown small to moderate reductions in NO_x emissions as compared to higher temperature combustion devices (i. e., fossil fuel-fired boilers).

With SNCR, ammonia (NH_3) or urea is injected into the furnace along with chemical additives to reduce NO_x to N_2 without the use of catalysts. Based on analyses of data from U. S. MWCs equipped with SNCR, NO_x reductions of 45 percent are achievable.

With SCR, NH_3 is injected into the flue gas downstream of the boiler where it mixes with NO_x in the flue gas and passes through a catalyst bed, where NO_x is reduced to N_2 by a reaction with NH_3. This technique has not been applied to U. S. MWCs, but has been used on MWCs in Japan and Germany. Reductions of up to 80 percent have been observed, but problems with catalyst poisoning and deactivation may reduce performance over time.

Natural gas reburning involves limiting combustion air to produce an LEA zone. Recirculated flue gas and natural gas are then added to this LEA zone to produce a fuel-rich zone that inhibits NO_x formation and promotes reduction of NO_x to N_2. Natural gas reburning has been evaluated on both pilot- and full-scale applications and achieved NO_x reductions of 50 to 60 percent.

2.1.5 Mercury Controls[11-14]

Unlike other metals, Hg exists in vapor form at typical APCD operating temperatures. As a result, collection of Hg in the APCD is highly variable. Factors that affect Hg control are good PM control, low temperatures in the APCD system, and a sufficient level of carbon in the fly ash. Higher levels of carbon in the fly ash enhance Hg adsorption onto the PM, which is removed by the PM control device. To keep the Hg from volatilizing, it is important to operate the control systems at low temperatures, generally less than about 300 to 400°F.

Several mercury control technologies have been used on waste combustors in the United States, Canada, Europe, and Japan. These control technologies include the injection of activated carbon or sodium sulfide (Na_2S) into the flue gas prior to the DSI- or SD-based acid gas control system, or the use of activated carbon filters.

With activated carbon injection, Hg is adsorbed onto the carbon particle, which is then captured in the PM control device. Test programs using activated carbon injection on MWCs in the United States have shown Hg removal efficiencies of 50 to over 95 percent, depending on the carbon feed rate.

Sodium sulfide injection involves spraying Na_2S solution into cooled flue gas prior to the acid gas control device. Solid mercuric sulfide is precipitated from the reaction of Na_2S and Hg and can be collected in the PM control device. Results from tests on European and Canadian MWCs have shown removal efficiencies of 50 to over 90 percent. Testings on a U. S. MWC, however, raised questions on the effectiveness of this technology due to possible oversights in the analytical procedure used in Europe and Canada.

Fixed bed activated carbon filters are another Hg control technology being used in Europe. With this technology, the flue gas is passed through a fixed bed of granular activated carbon where the Hg is adsorbed. Segments of the bed are periodically replaced as system pressure drop increases.

2.1.6 Emissions[15-121]

Tables 2.1-1, 2.1-2, 2.1-3, 2.1-4, 2.1-5, 2.1-6, 2.1-7, 2.1-8, and 2.1-9 present emission factors for MWCs. The tables are for distinct combustor types (i. e., MB/WW, RDF), and include emission factors for uncontrolled (prior to any pollution control device) levels and for controlled levels based on various APCD types (i. e., ESP, SD/FF). There is a large amount of data available for this source category and, as a result of this, many of the emission factors have high quality ratings. However, for some categories there were only limited data, and the ratings are low. In these cases, one should refer to the EPA Background Information Documents (BIDs) developed for the NSPS and EG, which more thoroughly analyze the data than does AP-42, as well as discuss performance capabilities of the control technologies and expected emission levels. Also, when using the MWC emission factors, it should be kept in mind that these are average values, and emissions from MWCs are greatly affected by the composition of the waste and may vary for different facilities due to seasonal and regional differences. The AP-42 background report for this section includes data for individual facilities that represent the range for a combustor/control technology category.

Table 2.1-1 (Metric Units). PARTICULATE MATTER, METALS, AND ACID GAS EMISSION FACTORS FOR MASS BURN AND MODULAR EXCESS AIR COMBUSTORS[a,b]

	Uncontrolled		ESP[c]		DSI/ESP[d]		SD/ESP[e]		DSI/FF[f]		SD/FF[g]	
Pollutant	kg/Mg	EMISSION FACTOR RATING	kg/Mg	EMISSION FACTOR RATING	kg/Mg	EMISSION FACTOR RATING	kg/Mg	EMISSION FACTOR RATING	kg/Mg	EMISSION FACTOR RATING	kg/Mg	EMISSION FACTOR RATING
PM[h]	1.26 E+01	A	1.05 E-01	A	2.95 E-02	E	3.52 E-02	A	8.95 E-02	A	3.11 E-02	A
As[j]	2.14 E-03	A	1.09 E-05	A	ND[k]	E	6.85 E-06	A	5.15 E-06	C	2.12 E-05	A
Cd[j]	5.45 E-03	A	3.23 E-04	B	4.44 E-05	E	3.76 E-06	A	1.17 E-05	C	1.36 E-05	A
Cr[j]	4.49 E-03	A	5.65 E-05	B	1.55 E-05	E	1.30 E-04	A	1.00 E-04	C	1.50 E-05	A
Hg[j]	2.8 E-03	A	2.8 E-03	A	1.98 E-03	E	1.63 E-03	A	1.10 E-03	C	1.10 E-03	A
Ni[j]	3.93 E-03	A	5.60 E-05	B	1.61 E-03	E	1.35 E-04	A	7.15 E-05	C	2.58 E-05	A
Pb[j]	1.07 E-01	A	1.50 E-03	A	1.45 E-03	E	4.58 E-04	A	1.49 E-04	C	1.31 E-04	A
SO_2	1.73 E+00	A	ND	NA	4.76 E-01	C	3.27 E-01[m]	A	7.15 E-01	C	2.77 E-01[m]	A
HCl[j]	3.20 E+00	A	ND	NA	1.39 E-01	C	7.90 E-02[m]	A	3.19 E-01	C	1.06 E-01[m]	A

[a] All factors in kg/Mg refuse combusted. Emission factors were calculated from concentrations using an F-factor of 0.26 dscm/joule (J) and a heating value of 10,466 J/g. Other heating values can be substituted by multiplying the emission factor by the new heating value and dividing by 10,466 J/g. Source Classification Codes 5-01-001-04, 5-01-001-05, 5-01-001-06, 5-01-001-07, 5-03-001-11, 5-03-001-12, 5-03-001-13, 5-03-001-15. ND = no data. NA = not applicable.

[b] Emission factors should be used for estimating long-term, not short-term, emission levels. This particularly applies to pollutants measured with a continuous emission monitoring system (e. g., SO_2).

[c] ESP = Electrostatic Precipitator

[d] DSI/ESP = Duct Sorbent Injection/Electrostatic Precipitator

[e] SD/ESP = Spray Dryer/Electrostatic Precipitator

[f] DSI/FF = Duct Sorbent Injection/Fabric Filter

[g] SD/FF = Spray Dryer/Fabric Filter

[h] PM = Filterable particulate matter, as measured with EPA Reference Method 5.

[j] Hazardous air pollutants listed in the *Clean Air Act*.

[k] No data available at levels greater than detection limits.

[m] Acid gas emissions from SD/ESP- and SD/FF-equipped MWCs are essentially the same. Any differences are due to scatter in the data.

Table 2.1-2 (English Units). PARTICULATE MATTER, METALS, AND ACID GAS EMISSION FACTORS FOR MASS BURN AND MODULAR EXCESS AIR COMBUSTORS[a,b]

	Uncontrolled		ESP[c]		DSI/ESP[d]		SD/ESP[e]		DSI/FF[f]		SD/FF[g]	
Pollutant	lb/ton	EMISSION FACTOR RATING	lb/ton	EMISSION FACTOR RATING	lb/ton	EMISSION FACTOR RATING	lb/ton	EMISSION FACTOR RATING	lb/ton	EMISSION FACTOR RATING	lb/ton	EMISSION FACTOR RATING
PM[h]	2.51 E+01	A	2.10 E-01	A	5.90 E-02	E	7.03 E-02	A	1.79 E-01	A	6.20 E-02	A
As[j]	4.37 E-03	A	2.17 E-05	A	ND[k]	E	1.37 E-05	A	1.03 E-05	C	4.23 E-06	A
Cd[j]	1.09 E-02	A	6.46 E-04	B	8.87 E-05	E	7.51 E-05	A	2.34 E-05	C	2.71 E-05	A
Cr[j]	8.97 E-03	A	1.13 E-04	B	3.09 E-05	E	2.59 E-04	A	2.00 E-04	C	3.00 E-05	A
Hg[j]	5.6 E-03	A	5.6 E-03	A	3.96 E-03	E	3.26 E-03	A	2.20 E-03	C	2.20 E-03	A
Ni[j]	7.85 E-03	A	1.12 E-04	B	3.22 E-05	E	2.70 E-04	A	1.43 E-04	C	5.16 E-05	A
Pb[j]	2.13 E-01	A	3.00 E-03	A	2.90 E-03	E	9.15 E-04	A	2.97 E-04	C	2.61 E-04	A
SO_2	3.46 E+00	A	ND	NA	9.51 E-01	C	6.53 E-01[m]	A	1.43 E-00	C	5.54 E-01[m]	A
HCl[j]	6.40 E+00	A	ND	NA	2.78 E-01	C	4.58 E-01[m]	A	6.36 E-01	C	2.11 E-01[m]	A

[a] All factors in lb/ton refuse combusted. Emission factors were calculated from concentrations using an F-factor of 9,570 dscf/MBtu and a heating value of 4,500 Btu/lb. Other heating values can be substituted by multiplying the emission factor by the new heating value and dividing by 4,500 Btu/lb. Source Classification Codes 5-01-001-04, 5-01-001-05, 5-01-001-06, 5-01-001-07, 5-03-001-11, 5-03-001-12, 5-03-001-13, 5-03-001-15. ND = no data. NA = not applicable.

[b] Emission factors should be used for estimating long-term, not short-term, emission levels. This particularly applies to pollutants measured with a continuous emission monitoring system (e. g., SO_2).

[c] ESP = Electrostatic Precipitator

[d] DSI/ESP = Duct Sorbent Injection/Electrostatic Precipitator

[e] SD/ESP = Spray Dryer/Electrostatic Precipitator

[f] DSI/FF = Duct Sorbent Injection/Fabric Filter

[g] SD/FF = Spray Dryer/Fabric Filter

[h] PM = Filterable particulate matter, as measured with EPA Reference Method 5.

[j] Hazardous air pollutants listed in the *Clean Air Act*.

[k] No data available at levels greater than detection limits.

[m] Acid gas emissions from SD/ESP- and SD/FF-equipped MWCs are essentially the same. Any differences are due to scatter in the data.

Table 2.1-3 (Metric Units). ORGANIC, NITROGEN OXIDES, CARBON MONOXIDE, AND CARBON DIOXIDE EMISSION FACTORS FOR MASS BURN WATERWALL COMBUSTORS[a,b]

	Uncontrolled		ESP[c]		SD/ESP[d]		DSI/FF[e]		SD/FF[f]	
Pollutant	kg/Mg	EMISSION FACTOR RATING	kg/Mg	EMISSION FACTOR RATING	kg/Mg	EMISSION FACTOR RATING	kg/Mg	EMISSION FACTOR RATING	kg/Mg	EMISSION FACTOR RATING
CDD/CDF[g]	8.35 E-07	A	5.85 E-07	A	3.11 E-07	A	8.0 E-08	C	3.31 E-08	A
NO_x[h]	1.83 E+00	A	*		*		*		*	
CO[h]	2.32 E-01	A	*		*		*		*	
CO2[j]	9.85 E+02	D	*		*		*		*	

[a] All factors in kg/Mg refuse combusted. Emission factors were calculated from concentrations using an F-factor of 0.26 dscm/J and a heating value of 10,466 J/g. Other heating values can be substituted by multiplying the emission factor by the new heating value and dividing by 10,466 J/g. Source Classification Codes 5-01-001-05, 5-03-001-12. * = Same as "uncontrolled" for these pollutants.

[b] Emission factors should be used for estimating long-term, not short-term, emission levels. This particularly applies to pollutants measured with a continuous emission monitoring system (e. g., CO, NO_x).

[c] ESP = Electrostatic Precipitator

[d] SD/ESP = Spray Dryer/Electrostatic Precipitator

[e] DSI/FF = Duct Sorbent Injection/Fabric Filter

[f] SD/FF = Spray Dryer/Fabric Filter

[g] CDD/CDF = total tetra- through octa- chlorinated dibenzo-p-dioxin/chlorinated dibenzofurans, 2,3,7,8-tetrachlorodibenzo-p-dioxin, and dibenzofurans are hazardous air pollutants listed in 1990 *Clean Air Act*.

[h] Control of NO_x and CO is not tied to traditional acid gas/PM control devices.

[j] Calculated assuming a dry carbon content of 26.8% for feed refuse.[126,135] CO_2 emitted from this source may not increase total atmospheric CO_2 because emissions may be offset by the uptake of CO_2 by regrowing biomass.

Table 2.1-4 (English Units). ORGANIC, NITROGEN OXIDES, CARBON MONOXIDE, AND CARBON DIOXIDE EMISSION FACTORS FOR MASS BURN WATERWALL COMBUSTORS[a,b]

	Uncontrolled		ESP[c]		SD/ESP[d]		DSI/FF[e]		SD/FF[f]	
Pollutant	lb/ton	EMISSION FACTOR RATING	lb/ton	EMISSION FACTOR RATING	lb/ton	EMISSION FACTOR RATING	lb/ton	EMISSION FACTOR RATING	lb/ton	EMISSION FACTOR RATING
CDD/CDF[g]	1.67 E-06	A	1.17 E-06	A	6.21 E-07	A	1.60 E-07	C	6.61 E-08	A
NO_x[h]	3.56 E+00	A	*		*		*		*	
CO[h]	4.63 E-01	A	*		*		*		*	
CO_2[j]	1.97 E+03	D	*		*		*		*	

[a] All factors in lb/ton refuse combusted. Emission factors were calculated from concentrations using an F-factor of 9,570 dscf/MBtu and a heating value of 4,500 Btu/lb. Other heating values can be substituted by multiplying the emission factor by the new heating value and dividing by 4,500 Btu/lb. Source Classification Codes 5-01-001-05, 5-03-001-12. * = Same as "uncontrolled" for these pollutants.

[b] Emission factors should be used for estimating long-term, not short-term, emission levels. This particularly applies to pollutants measured with a continuous emission monitoring system (e. g., CO, NO_x).

[c] ESP = Electrostatic Precipitator

[d] SD/ESP = Spray Dryer/Electrostatic Precipitator

[e] DSI/FF = Duct Sorbent Injection/Fabric Filter

[f] SD/FF = Spray Dryer/Fabric Filter

[g] CDD/CDF = total tetra- through octa- chlorinated dibenzo-p-dioxin/chlorinated dibenzofurans, 2,3,7,8-tetrachlorodibenzo-p-dioxin, and dibenzofurans are hazardous air pollutants listed in the 1990 *Clean Air Act*.

[h] Control of NO_x and CO is not tied to traditional acid gas/PM control devices.

[j] Calculated assuming a dry carbon content of 26.8% for feed refuse.[126,135] CO_2 emitted from this source may not increase total atmospheric CO_2 because emissions may be offset by the uptake of CO_2 by regrowing biomass.

Table 2.1-5 (Metric And English Units). ORGANIC, NITROGEN OXIDES, CARBON MONOXIDE, AND CARBON DIOXIDE EMISSION FACTORS FOR MASS BURN ROTARY WATERWALL COMBUSTORS[a,b]

Pollutant	Uncontrolled			ESP[c]			DSI/FF[d]			SD/FF[e]		
	kg/Mg	lb/ton	EMISSION FACTOR RATING	kg/Mg	lb/ton	EMISSION FACTOR RATING	kg/Mg	lb/ton	EMISSION FACTOR RATING	kg/Mg	lb/ton	EMISSION FACTOR RATING
CDD/CDF[f]	ND	ND	NA	ND	ND	NA	4.58 E-08	9.16 E-08	D	2.66 E-08	5.31E-08	B
NO_x[g]	1.13 E+00	2.25 E+00	E	*	*		*	*		*	*	
CO[g]	3.83 E-01	7.66 E-01	C	*	*		*	*		*	*	
CO_2[h]	9.85 E+02	1.97 E+03	D	*	*		*	*		*	*	

[a] Emission factors were calculated from concentrations using an F-factor of 0.26 dscm/J (9,570 dscf/MBtu) and a heating value of 10,466 J/g (4,500 Btu/lb). Other heating values can be substituted by multiplying the emission factor by the new heating value and dividing by 10,466 J/g (4,500 Btu/lb). Source Classification Codes 5-01-001-06, 5-03-001-13. ND = no data. NA = not applicable. * = Same as "uncontrolled" for these pollutants.

[b] Emission factors should be used for estimating long-term, not short-term, emission levels. This particularly applies to pollutants measured with a continuous emission monitoring system (e. g., CO, NO_X).

[c] ESP = Electrostatic Precipitator

[d] DSI/FF = Duct Sorbent Injection/Fabric Filter

[e] SD/FF = Spray Dryer/Fabric Filter

[f] CDD/CDF = total tetra- through octa- chlorinated dibenzo-p-dioxin/chlorinated dibenzofurans, 2,3,7,8-tetrachlorodibenzo-p-dioxin, and dibenzofurans are hazardous air pollutants listed in the *Clean Air Act*.

[g] Control of NO_x and CO is not tied to traditional acid gas/PM control devices.

[h] Calculated assuming a dry carbon content of 26.8% for feed refuse.[126,135] CO_2 emitted from this source may not increase total atmospheric CO_2 because emissions may be offset by the uptake of CO_2 by regrowing biomass.

Table 2.1-6 (Metric And English Units). ORGANIC, NITROGEN OXIDES, CARBON MONOXIDE, AND CARBON DIOXIDE EMISSION FACTORS FOR MASS BURN REFRACTORY WALL COMBUSTORS[a,b]

	Uncontrolled			ESP[c]			DSI/ESP[d]		
Pollutant	kg/Mg	lb/ton	EMISSION FACTOR RATING	kg/Mg	lb/ton	EMISSION FACTOR RATING	kg/Mg	lb/ton	EMISSION FACTOR RATING
CDD/CDF[e]	7.50 E-06	1.50 E-05	D	3.63 E-05	7.25 E-05	D	2.31 E-07	4.61 E-07	E
NO_x[f]	1.23 E+00	2.46 E+00	A	*	*		*	*	
CO[f]	6.85 E-01	1.37 E+00	C	*	*		*	*	
CO_2[g]	9.85 E+02	1.97 E+03	D	*	*		*	*	

[a] Emission factors were calculated from concentrations using an F-factor of 0.26 dscm/J (9,570 dscf/MBtu) and a heating value of 10,466 J/g (4,500 Btu/lb). Other heating values can be substituted by multiplying the emission factor by the new heating value and dividing by 10,466 J/g (4,500 Btu/lb). Source Classification Codes 5-01-001-04, 5-03-001-11. * = Same as "uncontrolled" for these pollutants.

[b] Emission factors should be used for estimating long-term, not short-term, emission levels. This particularly applies to pollutants measured with a continuous emission monitoring system (e. g., CO, NO_X).

[c] ESP = Electrostatic Precipitator

[d] DSI/ESP = Duct Sorbent Injection/Electrostatic Precipitator

[e] CDD/CDF = total tetra- through octa- chlorinated dibenzo-p-dioxin/chlorinated dibenzofurans, 2,3,7,8-tetrachlorodibenzo-p-dioxin, and dibenzofurans are hazardous air pollutants listed in the *Clean Air Act*.

[f] Control of NO_x and CO is not tied to traditional acid gas/PM control devices.

[g] Calculated assuming a dry carbon content of 26.8% for feed refuse.[126,135] CO_2 emitted from this source may not increase total atmospheric CO_2 because emissions may be offset by the uptake of CO_2 by regrowing biomass.

Table 2.1-7 (Metric And English Units). ORGANIC, NITROGEN OXIDES, CARBON MONOXIDE, AND CARBON DIOXIDE EMISSION FACTORS FOR MODULAR EXCESS AIR COMBUSTORS[a,b]

	Uncontrolled			ESP[c]			DSI/FF[d]		
Pollutant	kg/Mg	lb/ton	EMISSION FACTOR RATING	kg/Mg	lb/ton	EMISSION FACTOR RATING	kg/Mg	lb/ton	EMISSION FACTOR RATING
CDD/CDF[e]	ND	ND	NA	1.11 E-06	2.22 E-06	C	3.12 E-08	6.23 E-08	E
NO_x[f]	1.24 E+00	2.47 E+00	A	*	*		*	*	
CO[f]	ND	ND	NA	*	*		*	*	
CO_2[g]	9.85 E+02	1.97 E+03	D	*	*		*	*	

[a] Emission factors were calculated from concentrations using an F-factor of 0.26 dscm/J (9,570 dscf/MBtu) and a heating value of 10,466 J/g (4,500 Btu/lb). Other heating values can be substituted by multiplying the emission factor by the new heating value and dividing by 10,466 J/g (4,500 Btu/lb). Source Classification Codes 5-01-001-07, 5-03-001-15. ND = no data. NA = not applicable. * = Same as "uncontrolled" for these pollutants.

[b] Emission factors should be used for estimating long-term, not short-term, emission levels. This particularly applies to pollutants measured with a continuous emission monitoring system (e. g., CO, NO_x).

[c] ESP = Electrostatic Precipitator

[d] DSI/FF = Duct Sorbent Injection/Fabric Filter

[e] CDD/CDF = total tetra- through octa- chlorinated dibenzo-p-dioxin/chlorinated dibenzofurans, 2,3,7,8-tetrachlorodibenzo-p-dioxin, and dibenzofurans are hazardous air pollutants listed in the *Clean Air Act*.

[f] Control of NO_x and CO is not tied to traditional acid gas/PM control devices.

[g] Calculated assuming a dry carbon content of 26.8% for feed refuse[126,135] CO_2 emitted from this source may not increase total atmospheric CO_2 because emissions may be offset by the uptake of CO_2 by regrowing biomass.

Table 2.1-8 (Metric And English Units). EMISSION FACTORS FOR REFUSE-DERIVED FUEL-FIRED COMBUSTORS[a,b]

Pollutant	Uncontrolled			ESP[c]			SD/ESP[d]			SD/FF[e]		
	kg/Mg	lb/ton	EMISSION FACTOR RATING	kg/Mg	lb/ton	EMISSION FACTOR RATING	kg/Mg	lb/ton	EMISSION FACTOR RATING	kg/Mg	lb/ton	EMISSION FACTOR RATING
PM[f]	3.48 E+01	6.96 E+01	A	5.17 E-01	1.04 E+00	A	4.82 E-02	9.65 E-02	B	6.64 E-02	1.33 E-01	B
As[g]	2.97 E-03	5.94 E-03	B	6.70 E-05	1.34 E-04	D	5.41 E-06	1.08 E-05	D	2.59 E-06[h]	5.17 E-06[h]	A
Cd[g]	4.37 E-03	8.75 E-03	C	1.10 E-04	2.20 E-04	C	4.18 E-05	8.37 E-05	D	1.66 E-05[h]	3.32 E-05[h]	A
Cr[g]	6.99 E-03	1.40 E-02	B	2.34 E-04	4.68 E-04	D	5.44 E-05	1.09 E-04	D	2.04 E-05	4.07 E-05	D
Hg[g]	2.8 E-03	5.5 E-03	D	2.8 E-03	5.5 E-03	D	2.10 E-04	4.20 E-04	B	1.46 E-04	2.92 E-04	D
Ni[g]	2.18 E-03	4.36 E-03	C	9.05 E-03	1.81 E-02	D	9.64 E-05	1.93 E-04	D	3.15 E-05[j]	6.30 E-05[j]	A
Pb[g]	1.00 E-01	2.01 E-01	C	1.84 E-03[h]	3.66 E-03[h]	A	5.77 E-04	1.16 E-03	B	5.19 E-04	1.04 E-03	D
SO_2	1.95 E+00	3.90 E+00	C	ND	ND	NA	7.99 E-01	1.60E+00	D	2.21 E-01	4.41 E-01	D
HCl[g]	3.49 E+00	6.97 E+00	E	*	*		ND	ND	NA	2.64 E-02	5.28 E-02	C
NO_x[k]	2.51 E+00	5.02 E+00	A	*	*		*	*		*	*	
CO[k]	9.60 E-01	1.92 E+00	A	*	*		*	*		*	*	
CO_2[m]	1.34 E+03	2.68 E+03	E	*	*		*	*		*	*	
CDD/CDF[n]	4.73 E-06	9.47 E-06	D	8.46 E-06	1.69 E-05	B	5.31 E-08	1.06 E-07	D	1.22 E-08	2.44 E-08	E

[a] Emission factors were calculated from concentrations using an F-factor of 0.26 dscm/J (9,570 dscf/MBtu) and a heating value of 12,792 J/g (5,500 Btu/lb). Other heating values can be substituted by multiplying the emission factor by the new heating value and dividing by 12,792 J/g (5,500 Btu/lb). Source Classification Code 5-01-001-03. ND = no data. NA = not applicable. * = Same as uncontrolled for these pollutants.

[b] Emission factors should be used for estimating long-term, not short-term, emission levels. This particularly applies to pollutants measured with a continuous emission monitoring system (SO_2, NO_x, CO).

[c] ESP = Electrostatic Precipitator

[d] SD/ESP = Spray Dryer/Electrostatic Precipitator

[e] SD/FF = Spray Dryer/Fabric Filter

[f] PM = total particulate matter, as measured with EPA Reference Method 5.

[g] Hazardous air pollutants listed in the *Clean Air Act*.

[h] Levels were measured at non-detect levels, where the detection limit was higher than levels measured at other similarly equipped MWCs. Emission factors shown are based on emission levels from similarly equipped mass burn and MOD/EA combustors.

[j] No data available. Values shown are based on emission levels from SD/FF-equipped mass burn combustors.

[k] Control of NO_X and CO is not tied to traditional acid gas/PM control devices.

[m] Based on source tests from a single facility.[120] CO_2 emitted from this source may not increase total atmospheric CO_2 because emissions may be offset by the uptake of CO_2 by regrowing biomass.

[n] CDD/CDF = total tetra- through octa- chlorinated dibenzo-p-dioxin/chlorinated dibenzofurans, 2,3,7,8-tetrachlorodibenzo-p-dioxin, and dibenzofurans are hazardous air pollutants listed in the *Clean Air Act*.

Table 2.1-9 (Metric And English Units). EMISSION FACTORS FOR MODULAR STARVED-AIR COMBUSTORS[a,b]

Pollutant	Uncontrolled			ESP[c]		
	kg/Mg	lb/ton	EMISSION FACTOR RATING	kg/Mg	lb/ton	EMISSION FACTOR RATING
PM[d]	1.72 E+00	3.43 E+00	B	1.74 E-01	3.48 E-01	B
As[e]	3.34 E-04	6.69 E-04	C	5.25 E-05	1.05 E-04	D
Cd[e]	1.20 E-03	2.41 E-03	D	2.30 E-04	4.59 E-04	D
Cr[e]	1.65 E-03	3.31 E-03	C	3.08 E-04	6.16 E-04	D
Hg[e,f]	2.8 E-03	5.6 E-03	A	2.8 E-03	5.6 E-03	A
Ni[e]	2.76 E-03	5.52 E-03	D	5.04 E-04	1.01 E-03	E
Pb[e]	ND	ND	NA	1.41 E-03	2.82 E-03	C
SO_2	1.61 E+00	3.23 E+00	E	*	*	
HCl[e]	1.08 E+00	2.15 E+00	D	*	*	
NO_x[g]	1.58 E+00	3.16 E+00	B	*	*	
CO[g]	1.50 E-01	2.99 E-01	B	*	*	
CO_2[h]	9.85 E+02	1.97 E+03	D	*	*	
CDD/CDF[j]	1.47 E-06	2.94 E-06	D	1.88 E-06	3.76 E-06	C

[a] Emission factors were calculated from concentrations using an F-factor of 0.26 dscm/J (9,570 dscf/MBtu) and a heating value of 10,466 J/g (4,500 Btu/lb). Other heating values can be substituted by multiplying the emission factor by the new heating value and dividing by 10,466 J/g (4,500 Btu/lb). Source Classification Codes 5-01-001-01, 5-03-001-14. ND = no data. NA = not applicable. * = Same as "uncontrolled" for these pollutants.

[b] Emission factors should be used for estimating long-term, not short-term, emission levels. This particularly applies to pollutants measured with a continuous emission monitoring system (e. g., CO, NO_x).

[c] ESP = Electrostatic Precipitator

[d] PM = total particulate matter, as measured with EPA Reference Method 5.

[e] Hazardous air pollutants listed in the *Clean Air Act*.

[f] Mercury levels based on emission levels measured at mass burn, MOD/EA, and MOD/SA combustors.

[g] Control of NO_x and CO is not tied to traditional acid gas/PM control devices.

[h] Calculated assuming a dry carbon content of 26.8% for feed refuse.[126,135] CO_2 emitted from this source may not increase total atmospheric CO_2 because emissions may be offset by the uptake of CO_2 by regrowing biomass.

[j] CDD/CDF = total tetra- through octa- chlorinated dibenzo-p-dioxin/chlorinated dibenzofurans, 2,3,7,8-tetrachlorodibenzo-p-dioxin, and dibenzofurans are hazardous air pollutants listed in the *Clean Air Act*.

Another point to keep in mind when using emission factors is that certain control technologies, specifically ESPs and DSI systems, are not all designed with equal performance capabilities. The ESP and DSI-based emission factors are based on data from a variety of facilities and represent average emission levels for MWCs equipped with these control technologies. To estimate emissions for a specific ESP or DSI system, refer to either the AP-42 background report for this section or the NSPS and EG BIDs to obtain actual emissions data for these facilities. These documents should also be used when conducting risk assessments, as well as for determining removal efficiencies. Since the AP-42 emission factors represent averages from numerous facilities, the uncontrolled and controlled levels frequently do not correspond to simultaneous testing and should not be used to calculate removal efficiencies.

Emission factors for MWCs were calculated from flue gas concentrations using an F-factor of 0.26 dry standard cubic meters per joule (dscm/J) (9,570 dry standard cubic feet per million British thermal units [Btu]) and an assumed heating value of the waste of 10,466 J/g (4,500 Btu per pound [Btu/lb]) for all combustors except RDF, for which a 12,792 J/g (5,500 Btu/lb) heating value was assumed. These are average values for MWCs; however, a particular facility may have a different heating value for the waste. In such a case, the emission factors shown in the tables can be adjusted by multiplying the emission factor by the actual facility heating value and dividing by the assumed heating value (4,500 or 5,500 Btu/lb, depending on the combustor type). Also, conversion factors to obtain concentrations, which can be used for developing more specific emission factors or making comparisons to regulatory limits, are provided in Tables 2.1-10 and 2.1-11 for all combustor types (except RDF) and RDF combustors, respectively.

Also note that the values shown in the tables for PM are for total PM, and the CDD/CDF data represent total tetra- through octa-CDD/CDF. For SO_2, NO_x, and CO, the data presented in the tables represent long-term averages, and should not be used to estimate short-term emissions. Refer to the EPA BIDs which discuss achievable emission levels of SO_2, NO_x, and CO for different averaging times based on analysis of continuous emission monitoring data. Lastly, for PM and metals, levels for MB/WW, MB/RC, MB/REF, and MOD/EA were combined to determine the emission factors, since these emissions should be the same for these types of combustors. For controlled levels, data were combined within each control technology type (e. g., SD/FF data, ESP data). For Hg, MOD/SA data were also combined with the mass burn and MOD/EA data.

2.1.7 Other Types Of Combustors[122-134]

2.1.7.1 Industrial/Commercial Combustors -

The capacities of these units cover a wide range, generally between 23 and 1,800 kilograms (50 and 4,000 pounds) per hour. Of either single- or multiple-chamber design, these units are often manually charged and intermittently operated. Some industrial combustors are similar to municipal combustors in size and design. Emission control systems include gas-fired afterburners, scrubbers, or both. Under Section 129 of the CAAA, these types of combustors will be required to meet emission limits for the same list of pollutants as for MWCs. The EPA has not yet established these limits.

2.1.7.2 Trench Combustors -

Trench combustors, also called air curtain incinerators, forcefully project a curtain of air across a pit in which open burning occurs. The air curtain is intended to increase combustion efficiency and reduce smoke and PM emissions. Underfire air is also used to increase combustion efficiency.

Table 2.1-10. CONVERSION FACTORS FOR ALL COMBUSTOR TYPES EXCEPT RDF

Divide	By	To Obtain[a]
For As, Cd, Cr, Hg, Ni, Pb, and CDD/CDF:		
kg/Mg refuse	4.03×10^{-6}	μg/dscm
lb/ton refuse	8.06×10^{-6}	
For PM:		
kg/Mg refuse	4.03×10^{-3}	mg/dscm
lb/ton refuse	8.06×10^{-3}	
For HCl:		
kg/Mg refuse	6.15×10^{-3}	ppmv
lb/ton refuse	1.23×10^{-2}	
For SO^2:		
kg/Mg refuse	1.07×10^{-2}	ppmv
lb/ton refuse	2.15×10^{-2}	
For NO_X:		
kg/Mg refuse	7.70×10^{-3}	ppmv
lb/ton refuse	1.54×10^{-2}	
For CO:		
kg/Mg refuse	4.69×10^{-3}	ppmv
lb/ton refuse	9.4×10^{-3}	
For CO_2:		
kg/Mg refuse	7.35×10^{-3}	ppmv
lb/ton refuse	1.47×10^{-2}	

[a] At 7% O_2.

Table 2.1-11. CONVERSION FACTORS FOR REFUSE-DERIVED FUEL COMBUSTORS

Divide	By	To Obtain[a]
For As, Cd, Cr, Hg, Ni, Pb, and CDD/CDF:		
kg/Mg refuse	4.92×10^{-6}	μg/dscm
lb/ton refuse	9.85×10^{-6}	
For PM:		
kg/Mg refuse	4.92×10^{-3}	mg/dscm
lb/ton refuse	9.85×10^{-3}	
For HCl:		
kg/Mg refuse	7.5×10^{-3}	ppmv
lb/ton refuse	1.5×10^{-2}	
For SO_2:		
kg/Mg refuse	1.31×10^{-2}	ppmv
lb/ton refuse	2.62×10^{-2}	
For NO_x:		
kg/Mg refuse	9.45×10^{-3}	ppmv
lb/ton refuse	1.89×10^{-2}	
For CO:		
kg/Mg refuse	5.75×10^{-3}	ppmv
lb/ton refuse	1.15×10^{-2}	
For CO_2:		
kg/Mg refuse	9.05×10^{-3}	ppmv
lb/ton refuse	1.81×10^{-2}	

[a] At 7% O_2.

Trench combustors can be built either above- or below-ground. They have refractory walls and floors and are normally 8-feet wide and 10-feet deep. Length varies from 8 to 16 feet. Some units have mesh screens to contain larger particles of fly ash, but other add-on pollution controls are normally not used.

Trench combustors burning wood wastes, yard wastes, and clean lumber are exempt from Section 129, provided they comply with opacity limitations established by the Administrator. The primary use of air curtain incinerators is the disposal of these types of wastes; however, some of these combustors are used to burn MSW or construction and demolition debris.

In some states, trench combustors are often viewed as a version of open burning and the use of these types of units has been discontinued in some States.

2.1.7.3 Domestic Combustors -

This category includes combustors marketed for residential use. These types of units are typically located at apartment complexes, residential buildings, or other multiple family dwellings, and are generally found in urban areas. Fairly simple in design, they may have single or multiple refractory-lined chambers and usually are equipped with an auxiliary burner to aid combustion. Due to their small size, these types of units are not currently covered by the MWC regulations.

2.1.7.4 Flue-fed Combustors -

These units, commonly found in large apartment houses or other multiple family dwellings, are characterized by the charging method of dropping refuse down the combustor flue and into the combustion chamber. Modified flue-fed incinerators utilize afterburners and draft controls to improve combustion efficiency and reduce emissions. Due to their small size, these types of units are not currently covered by the MWC regulations.

Emission factors for industrial/commercial, trench, domestic, and flue-fed combustors are presented in Table 2.1-12.

Table 2.1-12 (Metric And English Units). UNCONTROLLED EMISSION FACTORS FOR REFUSE COMBUSTORS OTHER THAN MUNICIPAL WASTE[a]

EMISSION FACTOR RATING: D

Combustor Type	PM		SO_2		CO		Total Organic Compounds[b]		NO_x	
	kg/Mg	lb/ton	kg/Mg	lb/ton	kg/Mg	lb/ton	kg/Mg	lb/ton	kg/Mg	lb/ton
Industrial/commercial										
Multiple chamber	3.50 E+00	7.00 E+00	1.25 E+00	2.50 E+00	5.00 E+00	1.00 E+01	1.50 E+00	3.00 E+00	1.50 E+00	3.00 E+00
Single chamber	7.50 E+00	1.50 E+01	1.25 E+00	2.50 E+00	1.00 E+01	2.00 E+01	7.50 E+01	1.50 E+01	1.00 E+00	2.00 E+00
Trench										
Wood (SCC 5-01-005-10, 5-03-001-06)	6.50 E+00	1.30 E+01	5.00 E-02	1.00 E-01	ND	ND	ND	ND	2.00 E+00	4.00 E+00
Rubber tires (SCC 5-01-005-11, 5-03-001-07)	6.90 E+01	1.38 E+02	ND	ND	ND	ND	ND	ND	ND	ND
Municipal refuse (SCC 5-01-005-12, 5-03-001-09)	1.85 E+01	3.70 E+01	1.25 E+00	2.50 E+00	ND	ND	ND	ND	ND	ND
Flue-fed single chamber	1.50 E+01	3.00 E+01	2.50 E-01	5.00 E-01	1.00 E+01	2.00 E+01	7.50 E+00	1.50 E+01	1.50 E+00	3.00 E+00
Flue-fed (modified)	3.00 E+00	6.00 E+00	2.50 E-01	5.00 E-01	5.00 E+00	1.00 E+01	1.50 E+00	3.00 E+00	5.00 E+00	1.00 E+01
Domestic single chamber (no SCC)										
Without primary burner	1.75 E+01	3.50 E+01	2.50 E-01	5.00 E-01	1.50 E+02	3.00 E+02	5.00 E+01	1.00 E+02	5.00 E-01	1.00 E+00
With primary burner	3.50 E+00	7.00 E+00	2.50 E-01	5.00 E-01	Neg	Neg	1.00 E+00	2.00 E+00	1.00 E+00	2.00 E+00

[a] References 116-123. ND = no data. SCC = Source Classification Code. Neg = negligible.
[b] Expressed as methane.

References For Section 2.1

1. Written communication from D. A. Fenn and K. L. Nebel, Radian Corporation, Research Triangle Park, NC, to W. H. Stevenson, U. S. Environmental Protection Agency, Research Triangle Park, NC. March 1992.

2. J. Kiser, *"The Future Role Of Municipal Waste Combustion", Waste Age*, November 1991.

3. September 6, 1991. Meeting Summary: Appendix 1 (Docket No. A-90-45, Item Number II-E-12).

4. *Municipal Waste Combustion Study: Combustion Control Of Organic Emissions*, EPA/530-SW-87-021c, U. S. Environmental Protection Agency, Washington, DC, June 1987.

5. M. Clark, *"Minimizing Emissions From Resource Recovery"*, Presented at the International Workshop on Municipal Waste Incineration, Quebec, Canada, October 1-2, 1987.

6. *Municipal Waste Combustion Assessment: Combustion Control At Existing Facilities*, EPA 600/8-89-058, U. S. Environmental Protection Agency, Research Triangle Park, NC, August 1989.

7. *Municipal Waste Combustors - Background Information For Proposed Standards: Control Of NO_x Emissions*, EPA-450/3-89-27d, U. S. Environmental Protection Agency, Research Triangle Park, NC, August 1989.

8. *Municipal Waste Combustors - Background Information For Proposed Standards: Post Combustion Technology Performance*, U. S. Environmental Protection Agency, August 1989.

9. *Municipal Waste Combustion Study - Flue Gas Cleaning Technology*, EPA/530-SW-87-021c, U. S. Environmental Protection Agency, Washington, DC, June 1987.

10. R. Bijetina, *et al.*, "Field Evaluation of Methane de-NO_x at Olmstead Waste-to-Energy Facility", Presented at the 7th Annual Waste-to-Energy Symposium, Minneapolis, MN, January 28-30, 1992.

11. K. L. Nebel and D. M. White, *A Summary Of Mercury Emissions And Applicable Control Technologies For Municipal Waste Combustors*, Research Triangle Park, NC, September, 1991.

12. *Emission Test Report: OMSS Field Test On Carbon Injection For Mercury Control*, EPA-600/R-92-192, Office of Air Quality Planning and Standards, U. S. Environmental Protection Agency, Research Triangle Park, NC, September 1992.

13. J. D. Kilgroe, *et al.*, "Camden Country MWC Carbon Injection Test Results", Presented at the International Conference on Waste Combustion, Williamsburg, VA, March 1993.

14. Meeting Summary: *Preliminary Mercury Testing Results For The Stanislaus County Municipal Waste Combustor*, U. S. Environmental Protection Agency, Research Triangle Park, NC, November 22, 1991.

15. R. A. Zurlinden, *et al.*, *Environmental Test Report, Alexandria/Arlington Resources Recovery Facility, Units 1, 2, And 3*, Report No. 144B, Ogden Martin Systems of Alexandria/Arlington, Inc., Alexandria, VA, March 9, 1988.

16. R. A. Zurlinden, *et al.*, *Environmental Test Report, Alexandria/Arlington Resource Recovery Facility, Units 1, 2, And 3*, Report No. 144A (Revised), Ogden Martin Systems of Alexandria/Arlington, Inc., Alexandria, VA, January 8, 1988.

17. *Environmental Test Report, Babylon Resource Recovery Test Facility, Units 1 And 2*, Ogden Martin Systems of Babylon, Inc., Ogden Projects, Inc., March 1989.

18. Ogden Projects, Inc. *Environmental Test Report, Units 1 And 2, Babylon Resource Recovery Facility*, Ogden Martin Systems for Babylon, Inc., Babylon, NY, February 1990.

19. PEI Associates, Inc. *Method Development And Testing For Chromium, No. Refuse-to-Energy Incinerator, Baltimore RESCO*, EMB Report 85-CHM8, EPA Contract No. 68-02-3849, U. S. Environmental Protection Agency, Research Triangle Park, NC, August 1986.

20. Entropy Environmentalists, Inc. *Particulate, Sulfur Dioxide, Nitrogen Oxides, Chlorides, Fluorides, And Carbon Monoxide Compliance Testing, Units 1, 2, And 3*, Baltimore RESCO Company, L. P., Southwest Resource Recovery Facility, RUST International, Inc., January 1985.

21. Memorandum. J. Perez, AM/3, State of Wisconsin, to Files. *"Review Of Stack Test Performed At Barron County Incinerator,"* February 24, 1987.

22. D. S. Beachler, *et al.*, *"Bay County, Florida, Waste-To-Energy Facility Air Emission Tests. Westinghouse Electric Corporation"*, Presented at Municipal Waste Incineration Workshop, Montreal, Canada, October 1987.

23. *Municipal Waste Combustion, Multi-Pollutant Study. Emission Test Report. Volume I, Summary Of Results*, EPA-600/8-89-064a, Maine Energy Recovery Company, Refuse-Derived Fuel Facility, Biddeford, ME, July 1989.

24. S. Klamm, *et al.*, *Emission Testing At An RDF Municipal Waste Combustor*, EPA Contract No. 68-02-4453, U. S. Environmental Protection Agency, NC, May 6, 1988. (Biddeford)

25. *Emission Source Test Report -- Preliminary Test Report On Cattaraugus County*, New York State Department of Environmental Conservation, August 5, 1986.

26. *Permit No. 0560-0196 For Foster Wheeler Charleston Resource Recovery, Inc. Municipal Solid Waste Incinerators A & B*, Bureau of Air Quality Control, South Carolina Department of Health and Environmental Control, Charleston, SC, October 1989.

27. Almega Corporation. *Unit 1 And Unit 2, EPA Stack Emission Compliance Tests, May 26, 27, And 29, 1987, At The Signal Environmental Systems, Claremont, NH, NH/VT Solid Waste Facility*, Prepared for Clark-Kenith, Inc. Atlanta, GA, July 1987.

28. Entropy Environmentalists, Inc. *Stationary Source Sampling Report, Signal Environmental Systems, Inc., At The Claremont Facility, Claremont, New Hampshire, Dioxins/Furans Emissions Compliance Testing, Units 1 And 2*, Reference No. 5553-A, Signal Environmental Systems, Inc., Claremont, NH, October 2, 1987.

29. M. D. McDannel, *et al.*, *Air Emissions Tests At Commerce Refuse-To-Energy Facility May 26 - June 5, 1987*, County Sanitation Districts of Los Angeles County, Whittier, CA, July 1987.

30. M. D. McDannel and B. L. McDonald, *Combustion Optimization Study At The Commerce Refuse-To-Energy Facility. Volume I*, ESA 20528-557, County Sanitation Districts of Los Angeles County, Los Angeles, CA, June 1988.

31. M. D. McDannel *et al.*, *Results Of Air Emission Test During The Waste-to-Energy Facility*, County Sanitation Districts Of Los Angeles County, Whittier, CA, December 1988. (Commerce)

32. Radian Corporation. *Preliminary Data From October - November 1988 Testing At The Montgomery County South Plant, Dayton, Ohio.*

33. Written communication from M. Hartman, Combustion Engineering, to D. White, Radian Corporation, Detroit Compliance Tests, September 1990.

34. Interpoll Laboratories. *Results Of The November 3-6, 1987 Performance Test On The No. 2 RDF And Sludge Incinerator At The WLSSD Plant In Duluth, Minnesota*, Interpoll Report No. 7-2443, April 25, 1988.

35. D. S. Beachler, (Westinghouse Electric Corporation) and ETS, Inc, *Dutchess County Resource Recovery Facility Emission Compliance Test Report, Volumes 1-5*, New York Department of Environmental Conservation, June 1989.

36. ETS, Inc. *Compliance Test Report For Dutchess County Resource Recovery Facility*, May 1989.

37. Written communication and enclosures from W. Harold Snead, City of Galax, VA, to Jack R. Farmer, U. S. Environmental Protection Agency, Research Triangle Park, NC, July 14, 1988.

38. Cooper Engineers, Inc., *Air Emissions Tests Of Solid Waste Combustion A Rotary Combustion/Boiler System At Gallatin, Tennessee*, West County Agency of Contra Costa County, CA, July 1984.

39. B. L. McDonald, *et al.*, *Air Emissions Tests At The Hampton Refuse-Fired Stream Generating Facility, April 18-24, 1988*, Clark-Kenith, Incorporated, Bethesda, MD, June 1988.

40. Radian Corporation for American Ref-Fuel Company of Hempstead, *Compliance Test Report For The Hempstead Resource Recovery Facility, Westbury, NY*, Volume I, December 1989.

41. J. Campbell, Chief, Air Engineering Section, Hillsborough County Environmental Protection Commission, to E. L. Martinez, Source Analysis Section/AMTB, U. S. Environmental Protection Agency, May 1, 1986.

42. Mitsubishi SCR System for Municipal Refuse Incinerator, *Measuring Results At Tokyo-Hikarigaoka And Iwatsuki*, Mitsubishi Heavy Industries, Ltd, July 1987.

43. Entropy Environmentalists, Inc. for Honolulu Resource Recovery Venture, *Stationary Source Sampling Final Report*, Volume I, Oahu, HI, February 1990.

44. Ogden Projects, Inc., *Environmental Test Report, Indianapolis Resource Recovery Facility, Appendix A And Appendix B, Volume I*, (Prepared for Ogden Martin Systems of Indianapolis, Inc.), August 1989.

45. D. R. Knisley, *et al.* (Radian Corporation), *Emissions Test Report, Dioxin/Furan Emission Testing, Refuse Fuels Associates, Lawrence MA*, (Prepared for Refuse Fuels Association), Haverhill, MA, June 1987.

46. Entropy Environmentalists, Inc. *Stationary Source Sampling Report, Ogden Martin Systems of Haverhill, Inc., Lawrence, MA Thermal Conversion Facility. Particulate, Dioxins/Furans and Nitrogen Oxides Emission Compliance Testing*, September 1987.

47. D. D. Ethier, *et al.* (TRC Environmental Consultants), *Air Emission Test Results At The Southeast Resource Recovery Facility Unit 1, October - December, 1988*, Prepared for Dravo Corporation, Long Beach, CA, February 28, 1989.

48. Written communication from from H. G. Rigo, Rigo & Rigo Associates, Inc., to M. Johnston, U. S. Environmental Protection Agency. March 13, 1989. 2 pp. Compliance Test Report Unit No. 1 -- South East Resource Recovery Facility, Long Beach, CA.

49. M. A. Vancil and C. L. Anderson (Radian Corporation), *Summary Report CDD/CDF, Metals, HCl, SO_2, NO_x, CO And Particulate Testing, Marion County Solid Waste-To-Energy Facility, Inc., Ogden Martin Systems Of Marion, Brooks, Oregon*, U. S. Environmental Protection Agency, Research Triangle Park, NC, EMB Report No. 86-MIN-03A, September 1988.

50. C. L. Anderson, *et al.* (Radian Corporation), *Characterization Test Report, Marion County Solid Waste-To-Energy Facility, Inc., Ogden Martin Systems Of Marion, Brooks, Oregon*, U. S. Environmental Protection Agency, Research Triangle Park, NC, EMB Report No. 86-MIN-04, September 1988.

51. Letter Report from M. A. Vancil, Radian Corporation, to C. E. Riley, EMB Task Manager, U. S. Environmental Protection Agency. Emission Test Results for the PCDD/PCDF Internal Standards Recovery Study Field Test: Runs 1, 2, 3, 5, 13, 14. July 24, 1987. (Marion)

52. C. L. Anderson, *et al.*, (Radian Corporation). *Shutdown/Startup Test Program Emission Test Report, Marion County Solid Waste-To-Energy Facility, Inc., Ogden Martin Systems Of Marion, Brooks, Oregon*, U. S. Environmental Protection Agency, Research Triangle Park, NC, EMB Report No. 87-MIN-4A, September 1988.

53. Clean Air Engineering, Inc., *Report On Compliance Testing For Waste Management, Inc. At The McKay Bay Refuse-to-Energy Project Located In Tampa, Florida*, October 1985.

54. Alliance Technologies Corporation, *Field Test Report - NITEP III. Mid-Connecticut Facility, Hartford, Connecticut. Volume II Appendices*, Prepared for Environment Canada. June 1989.

55. C. L. Anderson, (Radian Corporation), *CDD/CDF, Metals, And Particulate Emissions Summary Report, Mid-Connecticut Resource Recovery Facility, Hartford, Connecticut*, U. S. Environmental Protection Agency, Research Triangle Park, NC, EMB Report No. 88-MIN-09A, January 1989.

56. Entropy Environmentalists, Inc., *Municipal Waste Combustion Multi-Pollutant Study, Summary Report, Wheelabrator Millbury, Inc., Millbury, MA*, U. S. Environmental Protection Agency, Research Triangle Park, NC, EMB Report No. 88-MIN-07A, February 1989.

57. Entropy Environmentalists, Inc., *Emissions Testing Report, Wheelabrator Millbury, Inc. Resource Recovery Facility, Millbury, Massachusetts, Unit Nos. 1 And 2, February 8 through 12, 1988*, Prepared for Rust International Corporation. Reference No. 5605-B. August 5, 1988.

58. Entropy Environmentalists, Inc., *Stationary Source Sampling Report, Wheelabrator Millbury, Inc., Resource Recovery Facility, Millbury, Massachusetts, Mercury Emissions Compliance Testing, Unit No. 1, May 10 And 11, 1988*, Prepared for Rust International Corporation. Reference No. 5892-A, May 18, 1988.

59. Entropy Environmentalists, Inc., *Emission Test Report, Municipal Waste Combustion Continuous Emission Monitoring Program, Wheelabrator Resource Recovery Facility, Millbury, Massachusetts*, U. S. Environmental Protection Agency, Research Triangle Park, NC, Emission Test Report 88-MIN-07C, January 1989.

60. Entropy Environmentalists, *Municipal Waste Combustion Multipollutant Study: Emission Test Report - Wheelabrator Millbury, Inc. Millbury, Massachusetts*, EMB Report No. 88-MIN-07, July 1988.

61. Entropy Environmentalists, *Emission Test Report, Municipal Waste Combustion, Continuous Emission Monitoring Program, Wheelabrator Resource Recovery Facility, Millbury, Massachusetts*, Prepared for the U. S. Environmental Protection Agency, Research Triangle Park, NC. EPA Contract No. 68-02-4336, October 1988.

62. Entropy Environmentalists, *Emissions Testing At Wheelabrator Millbury, Inc. Resource Recovery Facility, Millbury, Massachusetts*, Prepared for Rust International Corporation. February 8-12, 1988.

63. Radian Corporation, *Site-Specific Test Plan And Quality Assurance Project Plan For The Screening And Parametric Programs At The Montgomery County Solid Waste Management Division South Incinerator - Unit #3*, Prepared for U. S. EPA, OAQPS and ORD, Research Triangle Park, NC, November 1988.

64. Written communication and enclosures from John W. Norton, County of Montgomery, OH, to Jack R. Farmer, U. S. Environmental Protection Agency, Research Triangle Park, NC. May 31, 1988.

65. J. L. Hahn, *et al.*, (Cooper Engineers) and J. A. Finney, Jr., *et al.*, (Belco Pollution Control Corp.), *"Air Emissions Tests Of A Deutsche Babcock Anlagen Dry Scrubber System At The Munich North Refuse-Fired Power Plant"*, Presented at: 78th Annual Meeting of the Pollution Control Association, Detroit, MI, June 1985.

66. Clean Air Engineering, *Results Of Diagnostic And Compliance Testing At NSP French Island Generating Facility Conducted May 17 - 19, 1989*, July 1989.

67. *Preliminary Report On Occidental Chemical Corporation EFW. New York State Department Of Environmental Conservation*, (Niagara Falls), Albany, NY, January 1986.

68. H. J. Hall, Associates, *Summary Analysis On Precipitator Tests And Performance Factors, May 13-15, 1986 At Incinerator Units 1, 2 - Occidental Chemical Company*, Prepared for Occidental Chemical Company EFW, Niagara Falls, NY, June 25, 1986.

69. C. L. Anderson, *et al.* (Radian Corporation), *Summary Report, CDD/CDF, Metals and Particulate, Uncontrolled And Controlled Emissions, Signal Environmental Systems, Inc., North Andover RESCO, North Andover, MA*, U. S. Environmental Protection Agency, Research Triangle Park, NC, EMB Report No. 86-MINO2A, March 1988.

70. York Services Corporation, *Final Report For A Test Program On The Municipal Incinerator Located At Northern Aroostook Regional Airport, Frenchville, Maine*, Prepared for Northern Aroostook Regional Incinerator Frenchville, ME, January 26, 1987.

71. Radian Corporation, *Results From The Analysis Of MSW Incinerator Testing At Oswego County, New York*, Prepared for New York State Energy Research and Development Authority, March 1988.

72. Radian Corporation, *Data Analysis Results For Testing At A Two-Stage Modular MSW Combustor: Oswego County ERF, Fulton, New York*, Prepared for New York State's Energy Research and Development Authority, Albany, NY, November 1988.

73. A. J. Fossa, *et al.*, *Phase I Resource Recovery Facility Emission Characterization Study, Overview Report*, (Oneida, Peekskill), New York State Department of Environmental Conservation, Albany, NY, May 1987.

74. Radian Corporation, *Results From The Analysis Of MSW Incinerator Testing At Peekskill, New York*, Prepared for New York State Energy Research and Development Authority, DCN:88-233-012-21, August 1988.

75. Radian Corporation, *Results from the Analysis of MSW Incinerator Testing at Peekskill, New York (DRAFT)*, (Prepared for the New York State Energy Research and Development Authority), Albany, NY, March 1988.

76. Ogden Martin Systems of Pennsauken, Inc., *Pennsauken Resource Recovery Project, BACT Assessment For Control Of NO_x Emissions, Top-Down Technology Consideration*, Fairfield, NJ, pp. 11, 13, December 15, 1988.

77. Roy F. Weston, Incorporated, *Penobscot Energy Recovery Company Facility, Orrington, Maine, Source Emissions Compliance Test Report Incinerator Units A And B (Penobscot, Maine)*, Prepared for GE Company, September 1988.

78. S. Zaitlin, *Air Emission License Finding Of Fact And Order, Penobscot Energy Recovery Company, Orrington, ME*, State of Maine, Department of Environmental Protection, Board of Environmental Protection, February 26, 1986.

79. R. Neulicht, (Midwest Research Institute), *Emissions Test Report: City Of Philadelphia Northwest And East Central Municipal Incinerators*, Prepared for the U. S. Environmental Protection Agency, Philadelphia, PA, October 31, 1985.

80. Written communication with attachments from Philip Gehring, Plant Manager (Pigeon Point Energy Generating Facility), to Jack R. Farmer, Director, ESD, OAQPS, U. S. Environmental Protection Agency, June 30, 1988.

81. Entropy Environmentalists, Inc., *Stationary Source Sampling Report, Signal RESCO, Pinellas County Resource Recovery Facility, St. Petersburg, Florida, CARB/DER Emission Testing, Unit 3 Precipitator Inlets and Stack*, February and March 1987.

82. Midwest Research Institute, *Results Of The Combustion And Emissions Research Project At The Vicon Incinerator Facility In Pittsfield, Massachusetts*, Prepared for New York State Energy Research and Development Authority, June 1987.

83. Response to Clean Air Act Section 114 Information Questionnaire, Results of Non-Criteria Pollutant Testing Performed at Pope-Douglas Waste to Energy Facility, July 1987, Provided to EPA on May 9, 1988.

84. Engineering Science, Inc., *A Report On Air Emission Compliance Testing At The Regional Waste Systems, Inc. Greater Portland Resource Recovery Project*, Prepared for Dravo Energy Resources, Inc., Pittsburgh, PA, March 1989.

85. D. E. Woodman, *Test Report Emission Tests, Regional Waste Systems, Portland, ME*, February 1990.

86. Environment Canada, *The National Incinerator Testing And Evaluation Program: Two State Combustion*, Report EPS 3/up/1, (Prince Edward Island), September 1985.

87. *Statistical Analysis Of Emission Test Data From Fluidized Bed Combustion Boilers At Prince Edward Island, Canada*, U. S. Environmental Protection Agency, Publication No. EPA-450/3-86-015, December 1986.

88. *The National Incinerator Testing And Evaluation Program: Air Pollution Control Technology*, EPS 3/UP/2, (Quebec City), Environment Canada, Ottawa, September 1986.

89. Lavalin, Inc., *National Incinerator Testing And Evaluation Program: The Combustion Characterization Of Mass Burning Incinerator Technology; Quebec City (DRAFT)*, (Prepared for Environmental Protection Service, Environmental Canada), Ottawa, Canada, September 1987.

90. Environment Canada, *NITEP, Environmental Characterization Of Mass Burning Incinerator Technology at Quebec City. Summary Report*, EPS 3/UP/5, June 1988.

91. Interpoll Laboratories, *Results Of The March 21 - 26, 1988, Air Emission Compliance Test On The No. 2 Boiler At The Red Wing Station, Test IV (High Load)*, Prepared for Northern States Power Company, Minneapolis, MN, Report No. 8-2526, May 10, 1988.

92. Interpoll Laboratories, *Results Of The May 24-27, 1988 High Load Compliance Test On Unit 1 And Low Load Compliance Test On Unit 2 At The NSP Red Wing Station*, Prepared for Northern States Power Company, Minneapolis, MN, Report No. 8-2559, July 21, 1988.

93. Cal Recovery Systems, Inc., *Final Report, Evaluation Of Municipal Solid Waste Incineration. (Red Wing, Minnesota facility) Submitted To Minnesota Pollution Control Agency*, Report No. 1130-87-1, January 1987.

94. Eastmount Engineering, Inc., *Final Report, Waste-To-Energy Resource Recovery Facility, Compliance Test Program, Volumes II-V*, (Prepared for SEMASS Partnership.), March 1990.

95. D. McClanahan, (Fluor Daniel), A. Licata (Dravo), and J. Buschmann (Flakt, Inc.)., "Operating Experience With Three APC Designs On Municipal Incinerators". *Proceedings of the International Conference on Municipal Waste Combustion*, pp. 7C-19 to 7C-41, (Springfield), April 11-14, 1988.

96. Interpoll Laboratories, Inc., *Results Of The June 1988 Air Emission Performance Test On The MSW Incinerators At The St. Croix Waste To Energy Facility In New Richmond, Wisconsin*, Prepared for American Resource Recovery, Waukesha, WI, Report No. 8-2560, September 12, 1988.

97. Interpoll Laboratories, Inc, *Results Of The June 6, 1988, Scrubber Performance Test At The St. Croix Waste To Energy Incineration Facility In New Richmond, Wisconsin*, Prepared for Interel Corporation, Englewood, CO, Report No. 8-2560I, September 20, 1988.

98. Interpoll Laboratories, Inc., *Results Of The August 23, 1988, Scrubber Performance Test At The St. Croix Waste To Energy Incineration Facility In New Richmond, Wisconsin*, Prepared for Interel Corporation, Englewood, CO, Report No. 8-2609, September 20, 1988.

99. Interpoll Laboratories, Inc., *Results Of The October 1988 Particulate Emission Compliance Test On The MSW Incinerator At The St. Croix Waste To Energy Facility In New Richmond, Wisconsin*, Prepared for American Resource Recovery, Waukesha, WI, Report No. 8-2547, November 3, 1988.

100. Interpoll Laboratories, Inc., *Results Of The October 21, 1988, Scrubber Performance Test At The St. Croix Waste To Energy Facility In New Richmond, Wisconsin*, Prepared for Interel Corporation, Englewood, CO, Report No. 8-2648, December 2, 1988.

101. J. L. Hahn, (Ogden Projects, Inc.), *Environmental Test Report*, Prepared for Stanislaus Waste Energy Company Crows Landing, CA, OPI Report No. 177R, April 7, 1989.

102. J. L. Hahn, and D. S. Sofaer, "Air Emissions Test Results From The Stanislaus County, California Resource Recovery Facility", *Presented at the International Conference on Municipal Waste Combustion*, Hollywood, FL, pp. 4A-1 to 4A-14, April 11-14, 1989.

103. R. Seelinger, *et al.* (Ogden Products, Inc.), *Environmental Test Report, Walter B. Hall Resource Recovery Facility, Units 1 And 2*, (Prepared for Ogden Martin Systems of Tulsa, Inc.), Tulsa, OK, September 1986.

104. PEI Associates, Inc, *Method Development And Testing for Chromium, Municipal Refuse Incinerator, Tuscaloosa Energy Recovery, Tuscaloosa, Alabama*, U. S. Environmental Protection Agency, Research Triangle Park, NC, EMB Report 85-CHM-9, January 1986.

105. T. Guest and O. Knizek, *"Mercury Control At Burnaby's Municipal Waste Incinerator"*, Proceedings of the 84th Annual Meeting and Exhibition of the Air and Waste Management Association, Vancouver, British Columbia, Canada, June 16-21, 1991.

106. Trip Report, Burnaby MWC, British Columbia, Canada. White, D., Radian Corporation, May 1990.

107. Entropy Environmentalists, Inc. for Babcock & Wilcox Co. North County Regional Resource Recovery Facility, West Palm Beach, FL, October 1989.

108. P. M. Maly, *et al.*, *Results Of The July 1988 Wilmarth Boiler Characterization Tests*, Gas Research Institute Topical Report No. GRI-89/0109, June 1988-March 1989.

109. J. L. Hahn, (Cooper Engineers, Inc.), *Air Emissions Testing At The Martin GmbH Waste-To-Energy Facility In Wurzburg, West Germany*, Prepared for Ogden Martin Systems, Inc., Paramus, NJ, January 1986.

110. Entropy Environmentalists, Inc. for Westinghouse RESD, *Metals Emission Testing Results, Conducted At The York County Resource Recovery Facility*, February 1991.

111. Entropy Environmentalists, Inc. for Westinghouse RESD, *Emissions Testing For: Hexavalent Chromium, Metals, Particulate. Conducted At The York County Resource Recovery Facility*, July 31 - August 4, 1990.

112. Interpoll Laboratories, *Results of the July 1987 Emission Performance Tests Of The Pope/Douglas Waste-To-Energy Facility MSW Incinerators In Alexandria, Minnesota*, (Prepared for HDR Techserv, Inc.), Minneapolis, MN, October 1987.

113. D. B. Sussman, Ogden Martin System, Inc., Submittal to Air Docket (LE-131), Docket No. A-89-08, Category IV-M, Washington, DC, October 1990.

114. F. Ferraro, Wheelabrator Technologies, Inc., Data package to D. M. White, Radian Corporation, February 1991.

115. D. R. Knisley, *et al.* (Radian Corporation), *Emissions Test Report, Dioxin/Furan Emission Testing, Refuse Fuels Associates, Lawrence, Massachusetts*, (Prepared for Refuse Fuels Association), Haverhill, MA, June 1987.

116. Entropy Environmentalists, Inc., *Stationary Source Sampling Report, Ogden Martin Systems Of Haverhill, Inc., Lawrence, Massachusetts Thermal Conversion Facility. Particulate, Dioxins/Furans And Nitrogen Oxides Emission Compliance Testing*, September 1987.

117. A. J. Fossa, *et al.*, *Phase I Resource Recovery Facility Emission Characterization Study, Overview Report*, New York State Department of Environmental Conservation, Albany, NY, May 1987.

118. Telephone communciation between D. DeVan, Oneida ERF, and M. A. Vancil, Radian Corporation. April 4, 1988. Specific collecting area of ESPs.

119. G. M. Higgins, *An Evaluation Of Trace Organic Emissions From Refuse Thermal Processing Facilities (North Little Rock, Arkansas; Mayport Naval Station, Florida; And Wright Patterson Air Force Base, Ohio)*, Prepared for U. S. Environmental Protection Agency/Office of Solid Waste by Systech Corporation, July 1982.

120. R. Kerr, *et al.*, *Emission Source Test Report--Sheridan Avenue RDF Plant, Answers (Albany, New York)*, Division of Air Resources, New York State Department of Environmental Conservation, August 1985.

121. U. S. Environmental Protection Agency, Emission Factor Documentation for AP-42 Section 2.1, Refuse Combustion, Research Triangle Park, NC, May 1993.

122. *Air Pollutant Emission Factors*, APTD-0923, U. S. Environmental Protection Agency, Research Triangle Park, NC, April 1970.

123. *Control Techniques For Carbon Monoxide Emissions From Stationary Sources*, AP-65, U. S. Environmental Protection Agency, Research Triangle Park, NC, March 1970.

124. *Air Pollution Engineering Manual*, AP-40, U. S. Environmental Protection Agency, Research Triangle Park, NC, 1967.

125. J. DeMarco, *et al.*, *Incinerator Guidelines 1969*, SW. 13TS, U. S. Environmental Protection Agency, Research Triangle Park, NC, 1969.

126. *Municipal Waste Combustors - Background Information For Proposed Guidelines For Existing Facilities*, U. S. Environmental Protection Agency, Research Triangle Park, NC, EPA-450/3-89-27e, August 1989.

127. *Municipal Waste Combustors - Background Information for Proposed Standards: Control Of NO_x Emissions* U. S. Environmental Protection Agency, Research Triangle Park, NC, EPA-450/3-89-27d, August 1989.

127. J. O. Brukle, *et al.*, *"The Effects Of Operating Variables And Refuse Types On Emissions From A Pilot-scale Trench Incinerator,"* Proceedings of the 1968 Incinerator Conference, American Society of Mechanical Engineers, New York, NY, May 1968.

128. W. R. Nessen, *Systems Study Of Air Pollution From Municipal Incineration*, Arthur D. Little, Inc., Cambridge, MA, March 1970.

130. C. R. Brunner, *Handbook Of Incineration Systems*, McGraw-Hill, Inc., pp. 10.3-10.4, 1991.

131. Telephone communication between K. Quincey, Radian Corporation, and E. Raulerson, Florida Department of Environmental Regulations, February 16, 1993.

132. Telephone communication between K. Nebel and K. Quincey, Radian Corporation, and M. McDonnold, Simonds Manufacturing, February 16, 1993.

133. Telephone communication between K. Quincey, Radian Corporation, and R. Crochet, Crochet Equipment Company, February 16 and 26, 1993.

134. Telephone communication between K. Quincey, Radian Corporation, and T. Allen, NC Division of Environmental Management, February 16, 1993.

135. John Pacy, *Methane Gas In Landfills: Liability Or Asset?,* Proceedings of the Fourth National Congress of the Waste Management Technology and Resource and Energy Recovery, Co-sponsored by the National Solid Wastes Management Association and U. S. EPA, November 12-14, 1975.

2.2 Sewage Sludge Incineration

There are approximately 170 sewage sludge incineration (SSI) plants in operation in the United States. Three main types of incinerators are used: multiple hearth, fluidized bed, and electric infrared. Some sludge is co-fired with municipal solid waste in combustors based on refuse combustion technology (see Section 2.1). Refuse co-fired with sludge in combustors based on sludge incinerating technology is limited to multiple hearth incinerators only.

Over 80 percent of the identified operating sludge incinerators are of the multiple hearth design. About 15 percent are fluidized bed combustors and 3 percent are electric. The remaining combustors co-fire refuse with sludge. Most sludge incinerators are located in the Eastern United States, though there are a significant number on the West Coast. New York has the largest number of facilities with 33. Pennsylvania and Michigan have the next-largest numbers of facilities with 21 and 19 sites, respectively.

Sewage sludge incinerator emissions are currently regulated under 40 CFR Part 60, Subpart O and 40 CFR Part 61, Subparts C and E. Subpart O in Part 60 establishes a New Source Performance Standard for particulate matter. Subparts C and E of Part 61--National Emission Standards for Hazardous Air Pollutants (NESHAP)--establish emission limits for beryllium and mercury, respectively.

In 1989, technical standards for the use and disposal of sewage sludge were proposed as 40 CFR Part 503, under authority of Section 405 of the Clean Water Act. Subpart G of this proposed Part 503 proposes to establish national emission limits for arsenic, beryllium, cadmium, chromium, lead, mercury, nickel, and total hydrocarbons from sewage sludge incinerators. The proposed limits for mercury and beryllium are based on the assumptions used in developing the NESHAPs for these pollutants, and no additional controls were proposed to be required. Carbon monoxide emissions were examined, but no limit was proposed.

2.2.1 Process Description[1,2]

Types of incineration described in this section include:

- Multiple hearth,
- Fluidized bed, and
- Electric.

Single hearth cyclone, rotary kiln, and wet air oxidation are also briefly discussed.

2.2.1.1 Multiple Hearth Furnaces -

The multiple hearth furnace was originally developed for mineral ore roasting nearly a century ago. The air-cooled variation has been used to incinerate sewage sludge since the 1930s. A cross-sectional diagram of a typical multiple hearth furnace is shown in Figure 2.2-1. The basic multiple hearth furnace (MHF) is a vertically oriented cylinder. The outer shell is constructed of steel, lined with refractory, and surrounds a series of horizontal refractory hearths. A hollow cast iron rotating shaft runs through the center of the hearths. Cooling air is introduced into the shaft

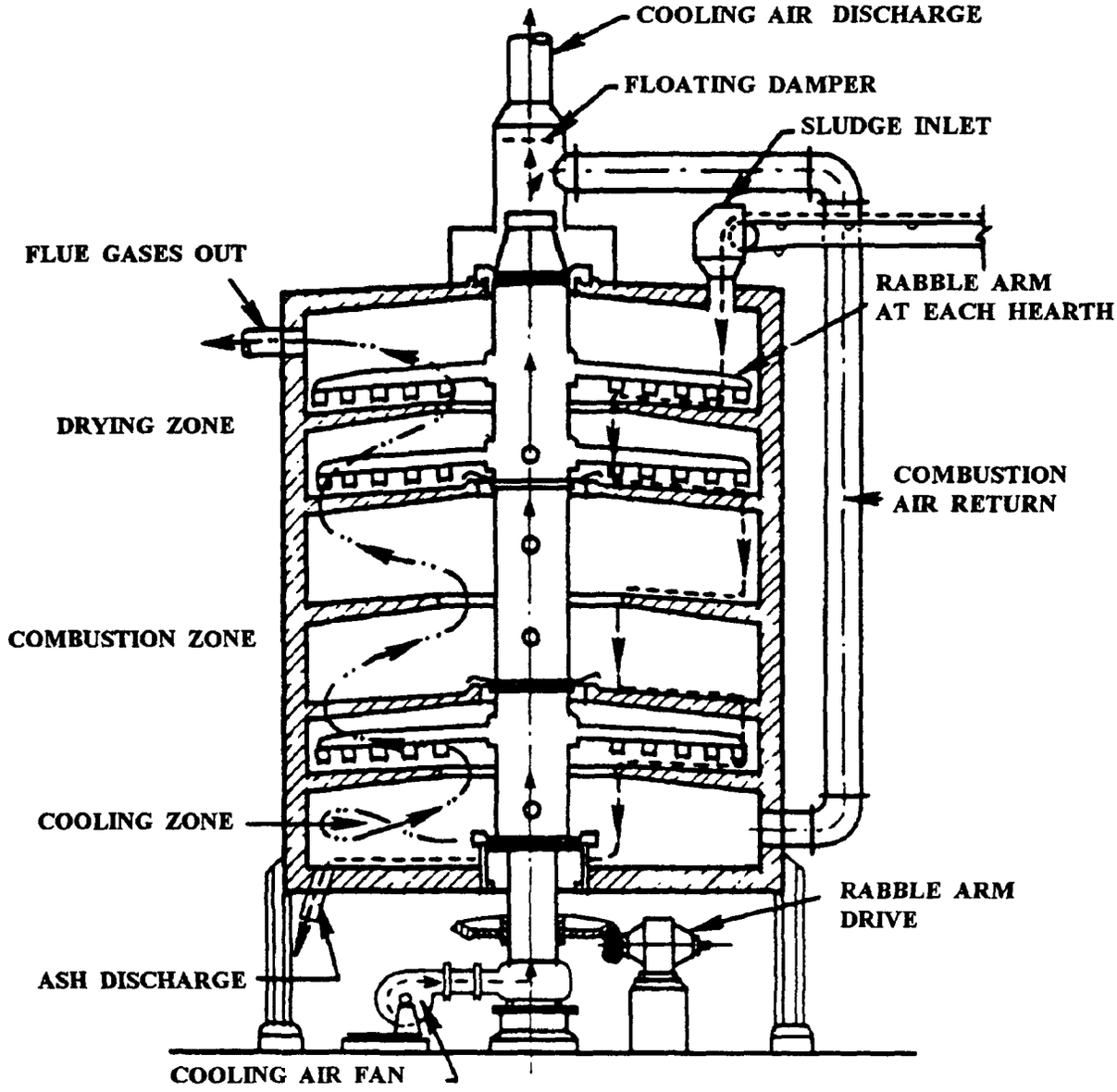

Figure 2.2-1. Cross Section of a Multiple Hearth Furnace

which extend above the hearths. Each rabble arm is equipped with a number of teeth, approximately 6 inches in length, and spaced about 10 inches apart. The teeth are shaped to rake the sludge in a spiral motion, alternating in direction from the outside in, to the inside out, between hearths. Typically, the upper and lower hearths are fitted with four rabble arms, and the middle hearths are fitted with two. Burners, providing auxiliary heat, are located in the sidewalls of the hearths.

In most multiple hearth furnaces, partially dewatered sludge is fed onto the perimeter of the top hearth. The rabble arms move the sludge through the incinerator by raking the sludge toward the center shaft where it drops through holes located at the center of the hearth. In the next hearth the sludge is raked in the opposite direction. This process is repeated in all of the subsequent hearths. The effect of the rabble motion is to break up solid material to allow better surface contact with heat and oxygen. A sludge depth of about 1 inch is maintained in each hearth at the design sludge flow rate.

Scum may also be fed to one or more hearths of the incinerator. Scum is the material that floats on wastewater. It is generally composed of vegetable and mineral oils, grease, hair, waxes, fats, and other materials that will float. Scum may be removed from many treatment units including preaeration tanks, skimming tanks, and sedimentation tanks. Quantities of scum are generally small compared to those of other wastewater solids.

Ambient air is first ducted through the central shaft and its associated rabble arms. A portion, or all, of this air is then taken from the top of the shaft and recirculated into the lowermost hearth as preheated combustion air. Shaft cooling air which is not circulated back into the furnace is ducted into the stack downstream of the air pollution control devices. The combustion air flows upward through the drop holes in the hearths, countercurrent to the flow of the sludge, before being exhausted from the top hearth. Air enters the bottom to cool the ash. Provisions are usually made to inject ambient air directly into the middle hearths as well.

From the standpoint of the overall incineration process, multiple hearth furnaces can be divided into three zones. The upper hearths comprise the drying zone where most of the moisture in the sludge is evaporated. The temperature in the drying zone is typically between 425 and 760°C (800 and 1400°F). Sludge combustion occurs in the middle hearths (second zone) as the temperature is increased to about 925°C (1700°F). The combustion zone can be further subdivided into the upper-middle hearths where the volatile gases and solids are burned, and the lower-middle hearths where most of the fixed carbon is combusted. The third zone, made up of the lowermost hearth(s), is the cooling zone. In this zone the ash is cooled as its heat is transferred to the incoming combustion air.

Multiple hearth furnaces are sometimes operated with afterburners to further reduce odors and concentrations of unburned hydrocarbons. In afterburning, furnace exhaust gases are ducted to a chamber where they are mixed with supplemental fuel and air and completely combusted. Some incinerators have the flexibility to allow sludge to be fed to a lower hearth, thus allowing the upper hearth(s) to function essentially as an afterburner.

Under normal operating condition, 50 to 100 percent excess air must be added to an MHF in order to ensure complete combustion of the sludge. Besides enhancing contact between fuel and oxygen in the furnace, these relatively high rates of excess air are necessary to compensate for normal variations in both the organic characteristics of the sludge feed and the rate at which it enters the incinerator. When an inadequate amount of excess air is available, only partial oxidation of the carbon will occur, with a resultant increase in emissions of carbon monoxide, soot, and hydrocarbons.

Too much excess air, on the other hand, can cause increased entrainment of particulate and unnecessarily high auxiliary fuel consumption.

Multiple hearth furnace emissions are usually controlled by a venturi scrubber, an impingement tray scrubber, or a combination of both. Wet cyclones and dry cyclones are also used. Wet electrostatic precipitators (Wet ESPs) are being installed as retrofits where tighter limits on particulate matter and metals are required by State regulations.

2.2.1.2 Fluidized Bed Incinerators -

Fluidized bed technology was first developed by the petroleum industry to be used for catalyst regeneration. Figure 2.2-2 shows the cross section diagram of a fluidized bed furnace. Fluidized bed combustors (FBCs) consist of a vertically oriented outer shell constructed of steel and lined with refractory. Tuyeres (nozzles designed to deliver blasts of air) are located at the base of the furnace within a refractory-lined grid. A bed of sand, approximately 0.75 meters (2.5 feet) thick, rests upon the grid. Two general configurations can be distinguished on the basis of how the fluidizing air is injected into the furnace. In the "hot windbox" design the combustion air is first preheated by passing through a heat exchanger where heat is recovered from the hot flue gases. Alternatively, ambient air can be injected directly into the furnace from a cold windbox.

Partially dewatered sludge is fed into the lower portion of the furnace. Air injected through the tuyeres, at pressures of from 20 to 35 kilopascals (3 to 5 pounds per square inch gauge), simultaneously fluidizes the bed of hot sand and the incoming sludge. Temperatures of 750 to 925°C (1400 to 1700°F) are maintained in the bed. Residence times are typically 2 to 5 seconds. As the sludge burns, fine ash particles are carried out the top of the furnace. Some sand is also removed in the air stream; sand make-up requirements are on the order of 5 percent for every 300 hours of operation.

Combustion of the sludge occurs in two zones. Within the bed itself (Zone 1), evaporation of the water and pyrolysis of the organic materials occur nearly simultaneously as the temperature of the sludge is rapidly raised. In the second zone (freeboard area), the remaining free carbon and combustible gases are burned. The second zone functions essentially as an afterburner.

Fluidization achieves nearly ideal mixing between the sludge and the combustion air and the turbulence facilitates the transfer of heat from the hot sand to the sludge. The most noticeable impact of the better burning atmosphere provided by a fluidized bed incinerator is seen in the limited amount of excess air required for complete combustion of the sludge. Typically, FBCs can achieve complete combustion with 20 to 50 percent excess air, about half the excess air required by multiple hearth furnaces. As a consequence, FBC incinerators have generally lower fuel requirements compared to MHF incinerators.

Fluidized bed incinerators most often have venturi scrubbers or venturi/impingement tray scrubber combinations for emissions control.

2.2.1.3 Electric Infrared Incinerators -

The first electric infrared furnace was installed in 1975, and their use is not common. Electric infrared incinerators consist of a horizontally oriented, insulated furnace. A woven wire belt conveyor extends the length of the furnace and infrared heating elements are located in the roof above the conveyor belt. Combustion air is preheated by the flue gases and is injected into the discharge end of the furnace. Electric infrared incinerators consist of a number of prefabricated modules, which can be linked together to provide the necessary furnace length. A cross section of an electric furnace is shown in Figure 2.2-3.

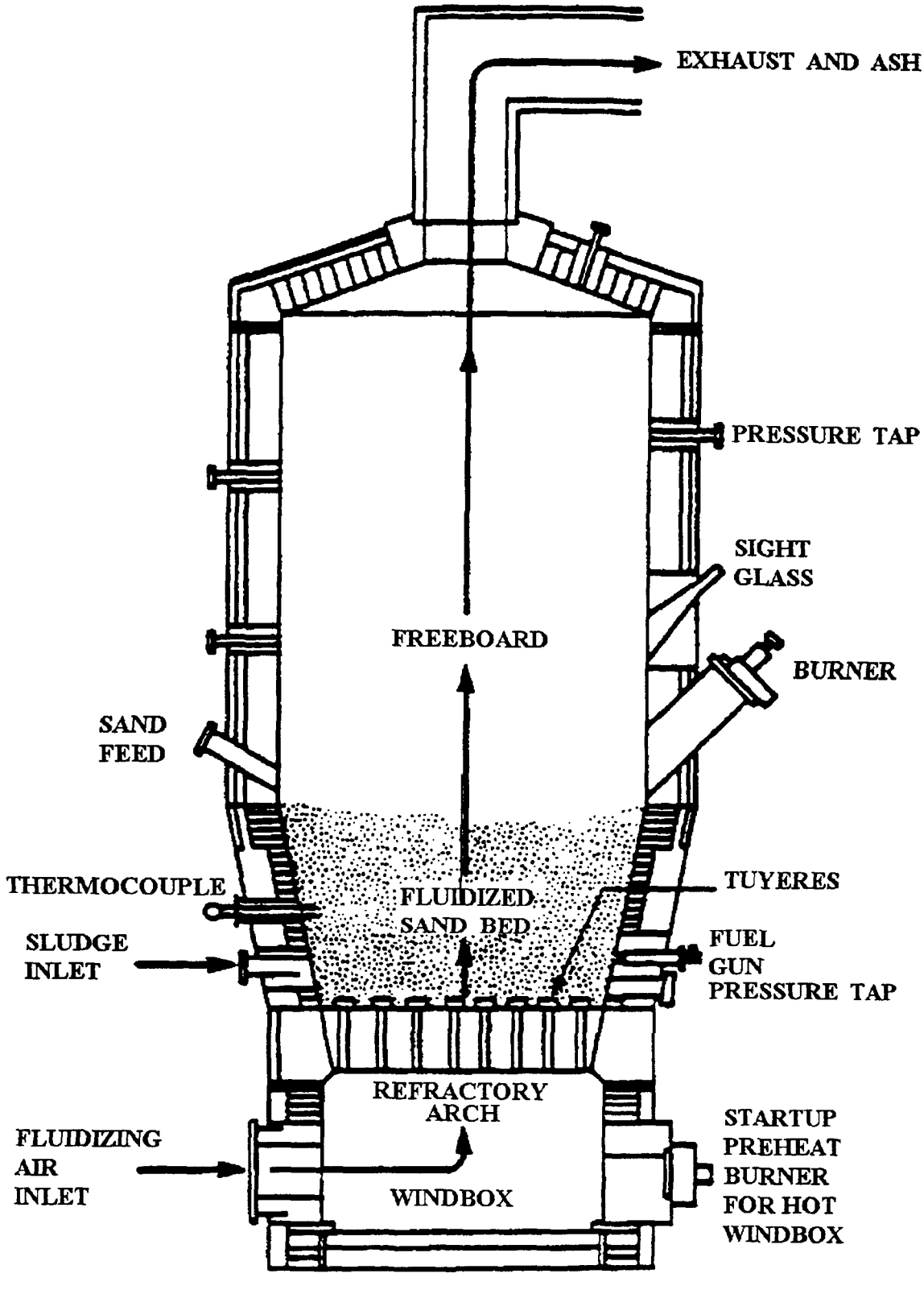

Figure 2.2-2. Cross Section of a Fluidized Bed Furnace

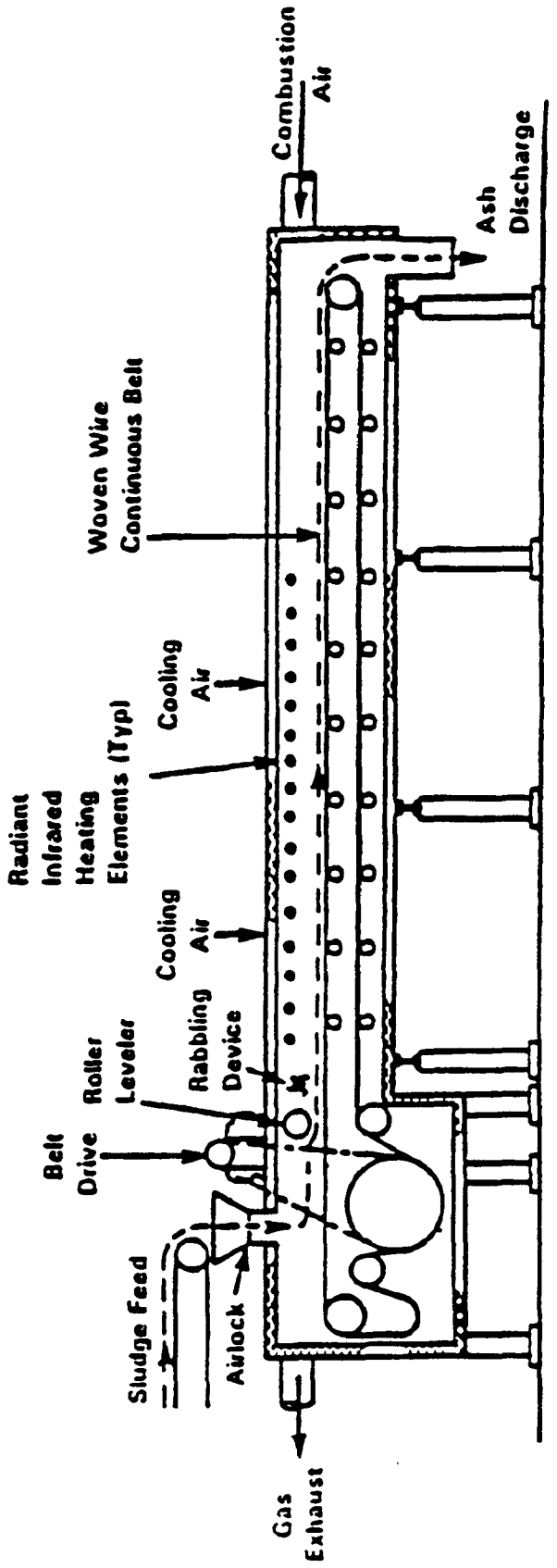

Figure 2.2-3. Cross Section of an Electric Infrared Furnace.

The dewatered sludge cake is conveyed into one end of the incinerator. An internal roller mechanism levels the sludge into a continuous layer approximately one inch thick across the width of the belt. The sludge is sequentially dried and then burned as it moves beneath the infrared heating elements. Ash is discharged into a hopper at the opposite end of the furnace. The preheated combustion air enters the furnace above the ash hopper and is further heated by the outgoing ash. The direction of air flow is countercurrent to the movement of the sludge along the conveyor. Exhaust gases leave the furnace at the feed end. Excess air rates vary from 20 to 70 percent.

Compared to MHF and FBC technologies, the electric infrared furnace offers the advantage of lower capital cost, especially for smaller systems. However, electricity costs in some areas may make an electric furnace infeasible. One other concern is replacement of various components such as the woven wire belt and infrared heaters, which have 3- to 5-year lifetimes.

Electric infrared incinerator emissions are usually controlled with a venturi scrubber or some other wet scrubber.

2.2.1.4 Other Technologies -

A number of other technologies have been used for incineration of sewage sludge, including cyclonic reactors, rotary kilns, and wet oxidation reactors. These processes are not in widespread use in the United States and will be discussed only briefly.

The cyclonic reactor is designed for small capacity applications. It is constructed of a vertical cylindrical chamber that is lined with refractory. Preheated combustion air is introduced into the chamber tangentially at high velocities. The sludge is sprayed radially toward the hot refractory walls. Combustion is rapid: The residence time of the sludge in the chamber is on the order of 10 seconds. The ash is removed with the flue gases.

Rotary kilns are also generally used for small capacity applications. The kiln is inclined slightly from the horizontal plane, with the upper end receiving both the sludge feed and the combustion air. A burner is located at the lower end of the kiln. The circumference of the kiln rotates at a speed of about 15 centimeters (cm) per second (6 inches per second). Ash is deposited into a hopper located below the burner.

The wet oxidation process is not strictly one of incineration; it instead utilizes oxidation at elevated temperature and pressure in the presence of water (flameless combustion). Thickened sludge, at about 6 percent solids, is first ground and mixed with a stoichiometric amount of compressed air. The slurry is then pressurized. The mixture is then circulated through a series of heat exchangers before entering a pressurized reactor. The temperature of the reactor is held between 175 and 315°C (350 and 600°F). The pressure is normally 7,000 to 12,500 kilopascals (1,000 to 1,800 pounds per square inch grade). Steam is usually used for auxiliary heat. The water and remaining ash are circulated out the reactor and are finally separated in a tank or lagoon. The liquid phase is recycled to the treatment plant. Offgases must be treated to eliminate odors: wet scrubbing, afterburning, or carbon absorption may be used.

2.2.1.5 Co-incineration and Co-firing -

Wastewater treatment plant sludge generally has a high water content and in some cases, fairly high levels of inert materials. As a result, its net fuel value is often low. If sludge is combined with other combustible materials in a co-incineration scheme, a furnace feed can be created that has both a low water concentration and a heat value high enough to sustain combustion with little or no supplemental fuel.

Virtually any material that can be burned can be combined with sludge in a co-incineration process. Common materials for co-combustion are coal, municipal solid waste (MSW), wood waste and agriculture waste. Thus, a municipal or industrial waste can be disposed of while providing an autogenous (self-sustaining) sludge feed, thereby solving two disposal problems.

There are two basic approaches to combusting sludge with MSW: (1) use of MSW combustion technology by adding dewatered or dried sludge to the MSW combustion unit, and (2) use of sludge combustion technology by adding processed MSW as a supplemental fuel to the sludge furnace. With the latter, MSW is processed by removing noncombustibles, shredding, air classifying, and screening. Waste that is more finely processed is less likely to cause problems such as severe erosion of the hearths, poor temperature control, and refractory failures.

2.2.2 Emissions And Controls[1-3]

Sewage sludge incinerators potentially emit significant quantities of pollutants. The major pollutants emitted are: (1) particulate matter, (2) metals, (3) carbon monoxide (CO), (4) nitrogen oxides (NO_x), (5) sulfur dioxide (SO_2), and (6) unburned hydrocarbons. Partial combustion of sludge can result in emissions of intermediate products of incomplete combustion (PIC), including toxic organic compounds.

Uncontrolled particulate emission rates vary widely depending on the type of incinerator, the volatiles and moisture content of the sludge, and the operating practices employed. Generally, uncontrolled particulate emissions are highest from fluidized bed incinerators because suspension burning results in much of the ash being carried out of the incinerator with the flue gas. Uncontrolled emissions from multiple hearth and fluidized bed incinerators are extremely variable, however. Electric incinerators appear to have the lowest rates of uncontrolled particulate release of the three major furnace types, possibly because the sludge is not disturbed during firing. In general, higher airflow rates increase the opportunity for particulate matter to be entrained in the exhaust gases. Sludge with low volatile content or high moisture content may compound this situation by requiring more supplemental fuel to burn. As more fuel is consumed, the amount of air flowing through the incinerator is also increased. However, no direct correlation has been established between airflow and particulate emissions.

Metal emissions are affected by metal content of the sludge, fuel bed temperature, and the level of particulate matter control. Since metals which are volatilized in the combustion zone condense in the exhaust gas stream, most metals (except mercury) are associated with fine particulate and are removed as the fine particulates are removed.

Carbon monoxide is formed when available oxygen is insufficient for complete combustion or when excess air levels are too high, resulting in lower combustion temperatures.

Emissions of nitrogen and sulfur oxides are primarily the result of oxidation of nitrogen and sulfur in the sludge. Therefore, these emissions can vary greatly based on local and seasonal sewage characteristics.

Emissions of volatile organic compounds (VOC) also vary greatly with incinerator type and operation. Incinerators with countercurrent airflow such as multiple hearth designs provide the greatest opportunity for unburned hydrocarbons to be emitted. In the MHF, hot air and wet sludge feed are contacted at the top of the furnace. Any compounds distilled from the solids are immediately vented from the furnace at temperatures too low to completely destruct them.

Particulate emissions from sewage sludge incinerators have historically been controlled by wet scrubbers, since the associated sewage treatment plant provides both a convenient source and a good disposal option for the scrubber water. The types of existing sewage sludge incinerator controls range from low pressure drop spray towers and wet cyclones to higher pressure drop venturi scrubbers and venturi/impingement tray scrubber combinations. Electrostatic precipitators and baghouses are employed primarily where sludge is co-fired with municipal solid waste. The most widely used control device applied to a multiple hearth incinerator is the impingement tray scrubber. Older units use the tray scrubber alone while combination venturi/impingement tray scrubbers are widely applied to newer multiple hearth incinerators and to fluidized bed incinerators. Most electric incinerators and many fluidized bed incinerators use venturi scrubbers only.

In a typical combination venturi/impingement tray scrubber, hot gas exits the incinerator and enters the precooling or quench section of the scrubber. Spray nozzles in the quench section cool the incoming gas and the quenched gas then enters the venturi section of the control device. Venturi water is usually pumped into an inlet weir above the quencher. The venturi water enters the scrubber above the throat and floods the throat completely. This eliminates build-up of solids and reduces abrasion. Turbulence created by high gas velocity in the converging throat section deflects some of the water traveling down the throat into the gas stream. Particulate matter carried along with the gas stream impacts on these water particles and on the water wall. As the scrubber water and flue gas leave the venturi section, they pass into a flooded elbow where the stream velocity decreases, allowing the water and gas to separate. Most venturi sections come equipped with variable throats. By restricting the throat area within the venturi, the linear gas velocity is increased and the pressure drop is subsequently increased. Up to a certain point, increasing the venturi pressure drop increases the removal efficiency. Venturi scrubbers typically maintain 60 to 99 percent removal efficiency for particulate matter, depending on pressure drop and particle size distribution.

At the base of the flooded elbow, the gas stream passes through a connecting duct to the base of the impingement tray tower. Gas velocity is further reduced upon entry to the tower as the gas stream passes upward through the perforated impingement trays. Water usually enters the trays from inlet ports on opposite sides and flows across the tray. As gas passes through each perforation in the tray, it creates a jet which bubbles up the water and further entrains solid particles. At the top of the tower is a mist eliminator to reduce the carryover of water droplets in the stack effluent gas. The impingement section can contain from one to four trays, but most systems for which data are available have two or three trays.

Emission factors and emission factor ratings for multiple hearth sewage sludge incinerators are shown in Tables 2.2-1, 2.2-2, 2.2-3, 2.2-4, and 2.2-5. Tables 2.2-6, 2.2-7, and 2.2-8 present emission factors for fluidized bed sewage sludge incinerators. Table 2.2-9 presents the available emission factors for electric infrared incinerators. Tables 2.2-10 and 2.2-11 present the cumulative particle size distribution and size-specific emission factors for sewage sludge incinerators. Figure 2.2-4, Figure 2.2-5, and Figure 2.2-6 present cumulative particle size distribution and size-specific emission factors for multiple-hearth, fluidized-bed, and electric infrared incinerators, respectively.

Table 2.2-1 (Metric And English Units). CRITERIA POLLUTANT EMISSION FACTORS FOR MULTIPLE HEARTH SEWAGE SLUDGE INCINERATORS[a]

Source Category[b]	Filterable Particulate Matter (PM)			Sulfur Dioxide (SO_2)			Nitrogen Oxides (NO_x)[c]		
	kg/Mg	lb/ton	EMISSION FACTOR RATING	kg/Mg	lb/ton	EMISSION FACTOR RATING	kg/Mg	lb/ton	EMISSION FACTOR RATING
Uncontrolled	5.2 E+01	1.0 E+02	B	1.4 E+01	2.8 E+01	B	2.5 E+00	5.0 E+00	C
Controlled									
Cyclone	2.0 E+00	4.0 E+00	E	2.8 E+00	5.6 E+00	E			
Cyclone/impingement	4.0 E-01	8.0 E-01	E						
Cyclone/venturi	2.5 E-01	5.0 E-01	D						
Cyclone/venturi/impingement	3.1 E-01	6.2 E-01	E						
Electrostatic precipitator									
Fabric filter	2.0 E-03	4.0 E-03	E						
Impingement	7.0 E-01	1.4 E+00	B	3.2 E-01	6.4 E-01	D			
Venturi	1.6 E+00	3.2 E+00	B	2.3 E+00	4.6 E+00	E			
Venturi/impingement/afterburner									
Venturi/impingement	1.1 E+00	2.2 E+00	A	1.0 E-01	2.0 E-01	E			
Venturi/impingement/Wet ESP	2.0 E-01	4.0 E-01	E						
Venturi/Wet ESP									

Table 2.2-1 (cont.).

Source Category	Carbon Monoxide (CO)[c]			Lead[d]			Methane			Total Nonmethane Organic Compounds		
	kg/Mg	lb/ton	EMISSION FACTOR RATING	kg/Mg	lb/ton	EMISSION FACTOR RATING	kg/Mg	lb/ton	EMISSION FACTOR RATING	kg/Mg	lb/ton	EMISSION FACTOR RATING
Uncontrolled	1.55 E+01	3.1 E+01	C	5.0 E-02	1.0 E-01	B				8.4 E-01	1.7 E+00	D
Controlled												
Cyclone				3.0 E-02	6.0 E-02	E				1.5 E+00	3.0 E+00	E
Cyclone/impingement												
Cyclone/venturi				3.0 E-03	6.0 E-03	E				2.2 E-01	4.4 E-01	E
Cyclone/venturi/ impingement				1.1 E-02	2.2 E-02	E						
Electrostatic precipitator				1.0 E-03	2.0 E-03	E						
Fabric filter												
Impingement				2.0 E-02	4.0 E-02	E	3.9 E-01	7.8 E-01	E	7.8 E-01	1.6 E+00	E
Venturi				9.0 E-04	1.8 E-03	E	3.2 E+00	6.4 E+00	E			
Venturi/impingement/ afterburner				5.0 E-02	1.0 E-01	E						
Venturi/impingement				3.0 E-02	6.0 E-02	B						
Venturi/impingement/ Wet ESP												
Venturi/Wet ESP				9.0 E-05	1.8 E-04	E						

[a] Units are pollutants emitted of dry sludge burned. Source Classification Code 5-01-005-15. Blanks indicate no data.
[b] Wet ESP = wet electrostatic precipitator.
[c] Uncontrolled emission factors for NO_x and CO apply to all air pollution control device types.
[d] Hazardous air pollutants listed in the *Clean Air Act*.

Table 2.2-2 (Metric And English Units). ACID GAS EMISSION FACTORS FOR MULTIPLE HEARTH SEWAGE SLUDGE INCINERATORS[a]

Source Category[b]	Sulfuric Acid (H_2SO_4)			Hydrogen Chloride (HCl)[c]		
	g/Mg	lb/ton	EMISSION FACTOR RATING	kg/Mg	lb/ton	EMISSION FACTOR RATING
Uncontrolled	6.0 E-01	1.2 E+00	D			
Controlled						
Cyclone	3.3 E-01	6.6 E-01	E			
Cyclone/impingement				1.0 E-02	2.0 E-02	E
Cyclone/venturi				1.0 E-02	2.0 E-02	E
Cyclone/venturi/impingement						
Electrostatic precipitator						
Fabric filter						
Impingement	5.0 E-02	1.0 E-01	E	1.0 E-02	2.0 E-02	E
Venturi				1.0 E-02	2.0 E-02	E
Venturi/impingement/afterburner						
Venturi/impingement	2.0 E-01	4.0 E-01	E			
Venturi/impingement/Wet ESP						
Venturi/Wet ESP						

[a] Units are pollutants emitted of dry sludge burned. Source Classification Code 5-01-005-15. Blanks indicate no data.
[b] Wet ESP = wet electrostatic precipitator.
[c] Hazardous air pollutants listed in the *Clean Air Act*.

Table 2.2-3 (Metric And English Units). CHLORINATED DIBENZO-P-DIOXIN (CDD) AND CHLORINATED DIBENZOFURAN (CDF) EMISSION FACTORS FOR MULTIPLE HEARTH SEWAGE SLUDGE INCINERATORS[a]

EMISSION FACTOR RATING: E

Source Category[b]	2,3,7,8-TCDD[c]		Total TCDD		Total PCDD	
	μg/Mg	lb/ton	μg/Mg	lb/ton	μg/Mg	lb/ton
Uncontrolled			6.3 E+01	1.3 E-07	2.7 E+00	5.4 E-09
Controlled						
Cyclone						
Cyclone/impingement						
Cyclone/venturi			1.4 E+00	2.8 E-09		
Cyclone/venturi/impingement	3.0 E-01	6.0 E-10				
Electrostatic precipitator						
Fabric filter						
Impingement	5.0 E-01	1.0 E-09	2.8 E+01	5.6 E-08	3.7 E+00	7.4 E-09
Venturi						
Venturi/impingement/afterburner	9.0 E-01	1.8 E-09				
Venturi/impingement	2.0 E+00	4.0 E-09				
Venturi/impingement/Wet ESP						
Venturi/Wet ESP						

Table 2.2-3 (cont.).

Source Category[b]	Total HxCDD		Total HpCDD		Total OCDD	
	μg/Mg	lb/ton	μg/Mg	lb/ton	μg/Mg	lb/ton
Uncontrolled	6.8 E+01	1.4 E-07	3.4 E+02	6.8 E-07	3.7 E+02	7.4 E-07
Controlled						
Cyclone						
Cyclone/impingement						
Cyclone/venturi			8.0 E-01	1.6 E-09	3.4 E+00	6.8 E-09
Cyclone/venturi/impingement	4.4 E+00	8.8 E-09	1.4 E+01	2.8 E-08	3.1 E+01	6.7 E-08
Electrostatic precipitator						
Fabric filter						
Impingement	2.4 E+01	4.8 E-08	7.3 E+01	1.5 E-07	5.3 E+01	1.1 E-07
Venturi						
Venturi/impingement/afterburner	6.0 E+01	1.2 E-07	2.3 E+01	4.6 E-08	1.2 E+01	2.4 E-08
Venturi/impingement	3.8 E+01	7.6 E-08	1.5 E+01	3.0 E-08	1.9 E+01	3.8 E-08
Venturi/impingement/Wet ESP						
Venturi/Wet ESP						

Table 2.2-3 (cont.).

Source Category[b]	2,3,7,8-TCDF[c]		Total TCDF[c]		Total PCDF[c]	
	μg/Mg	lb/ton	μg/Mg	lb/ton	μg/Mg	lb/ton
Uncontrolled	6.2 E+02	1.2 E-06	1.7 E+03	3.4 E-06	9.8 E+02	2.0 E-06
Controlled						
Cyclone						
Cyclone/impingement						
Cyclone/venturi	5.6 E+00	1.1 E-08	5.0 E+01	1.0 E-07	1.1 E+01	2.2 E-08
Cyclone/venturi/impingement			1.8 E+02	3.8 E-07	5.7 E+01	1.1 E-07
Electrostatic precipitator						
Fabric filter						
Impingement	1.8 E+02	3.6 E-07	7.0 E+02	1.4 E-06	3.6 E+02	7.2 E-07
Venturi						
Venturi/impingement/afterburner	5.4 E+01	1.1 E-07	3.5 E+02	7.0 E-07	1.3 E+02	2.6 E-07
Venturi/impingement	4.6 E+01	9.2 E-08	6.0 E+02	1.2 E-06	1.3 E+00	2.6 E-09
Venturi/impingement/Wet ESP						
Venturi/Wet ESP						

Table 2.2-3 (cont.).

Source Category[b]	Total HxCDF[c]		Total HpCDF[c]		Total OCDF[c]	
	μg/Mg	lb/ton	μg/Mg	lb/ton	μg/Mg	lb/ton
Uncontrolled	9.9 E+01	2.0 E-07	4.8 E+02	9.6 E-07	4.9 E+02	9.8 E-07
Controlled						
Cyclone						
Cyclone/impingement						
Cyclone/venturi	3.4 E+00	6.8 E-09	9.0 E-01	1.8 E-09	7.0 E-01	1.4 E-09
Cyclone/venturi/impingement	1.8 E+00	3.6 E-09	2.9 E+00	5.8 E-09	1.8 E+00	3.6 E-09
Electrostatic precipitator						
Fabric filter						
Impingement	1.1 E+02	2.2 E-07	2.0 E+02	4.0 E-07	1.5 E+02	3.0 E-07
Venturi						
Venturi/impingement/afterburner	7.8 E+01	1.5 E-07	4.8 E+01	9.6 E-08	7.7 E+00	1.5 E-08
Venturi/impingement	5.7 E+01	1.1 E-07	4.1 E+01	8.2 E-08	6.3 E+00	1.3 E-08
Venturi/impingement/Wet ESP						
Venturi/Wet ESP						

Table 2.2-3 (cont.).

Source Category[b]	Total Tetra- through Octa- CDD		Total Tetra- through Octa- CDF	
	μg/Mg	lb/ton	μg/Mg	lb/ton
Uncontrolled	8.5 E+02	1.7 E-06	3.8 E+03	7.6 E-06
Controlled				
Cyclone				
Cyclone/impingement				
Cyclone/venturi	5.6 E+00	1.1 E-08	6.6 E+01	1.3 E-07
Cyclone/venturi/impingement	1.1 E+02	2.2 E-07	2.5 E+02	5.0 E-07
Electrostatic precipitator				
Fabric filter				
Impingement	1.8 E+02	3.6 E-07	1.5 E+03	3.0 E-06
Venturi				
Venturi/impingement/afterburner	3.1 E+02	6.2 E-07	4.6 E+02	9.2 E-07
Venturi/impingement	2.7 E+02	5.4 E-07	9.3 E+02	1.9 E-06
Venturi/impingement/Wet ESP				
Venturi/Wet ESP				

[a] Units are pollutant emitted of dry sludge burned. Source Classification Code 5-01-005-15. Blanks indicate no data.
[b] Wet ESP = wet electrostatic precipitator.
[c] Hazardous air pollutants listed in the *Clean Air Act*.

Table 2.2-4 (Metric And English Units). SUMMARY OF ORGANIC COMPOUND EMISSIONS FROM MULTIPLE HEARTH SEWAGE SLUDGE INCINERATORS[a]

Source Category[b]	1,1,1-Trichloroethane[c]			1,1-Dichloroethane[c]			1,2-Dichloroethane[c]		
	g/Mg	lb/ton	EMISSION FACTOR RATING	g/Mg	lb/ton	EMISSION FACTOR RATING	g/Mg	lb/ton	EMISSION FACTOR RATING
Uncontrolled	6.0 E-02	1.2 E-04	D						
Controlled									
Cyclone									
Cyclone/impingement	1.9 E+00	3.8 E-03	E	2.3 E-01	4.6 E-04	E			
Cyclone/venturi	7.0 E-02	1.4 E-04	E				4.0 E-03	8.0 E-06	E
Cyclone/venturi/impingement									
Electrostatic precipitator									
Fabric filter									
Impingement									
Venturi									
Venturi/impingement/afterburner	1.4 E+00	2.8 E-03	E				3.0 E-02	6.0 E-05	E
Venturi/impingement	6.1 E-01	1.2 E-03	D				1.0 E-02	2.0 E-05	E
Venturi/impingement/Wet ESP									
Venturi/Wet ESP									

Table 2.2-4 (cont.).

Source Category[b]	1,2-Dichlorobenzene			1,3-Dichlorobenzene			1,4-Dichlorobenzene[c]		
	g/Mg	lb/ton	EMISSION FACTOR RATING	g/Mg	lb/ton	EMISSION FACTOR RATING	g/Mg	lb/ton	EMISSION FACTOR RATING
Uncontrolled	3.7 E-01	7.4 E-04	E				4.1 E-01	8.2 E-04	E
Controlled									
Cyclone									
Cyclone/impingement									
Cyclone/venturi				5.0 E-02	1.0 E-04	E	7.0 E-03	1.4 E-05	E
Cyclone/venturi/impingement									
Electrostatic precipitator									
Fabric filter									
Impingement									
Venturi									
Venturi/impingement/ afterburner									
Venturi/impingement	1.9 E-01	3.8 E-04	E	2.0 E-02	4.0 E-05	E	2.4 E-01	4.8 E-04	E
Venturi/impingement/Wet ESP									
Venturi/Wet ESP									

Table 2.2-4 (cont.).

Source Category[b]	2-Nitrophenol			Acetaldehyde[c]			Acetone		
	g/Mg	lb/ton	EMISSION FACTOR RATING	g/Mg	lb/ton	EMISSION FACTOR RATING	g/Mg	lb/ton	EMISSION FACTOR RATING
Uncontrolled	6.0 E+00	1.2 E-02	E						
Controlled									
Cyclone									
Cyclone/impingement									
Cyclone/venturi	3.8 E-01	7.6 E-04	E						
Cyclone/venturi/impingement									
Electrostatic precipitator									
Fabric filter									
Impingement				1.6 E-01	3.2 E-04	E			
Venturi							3.2 E+00	6.4 E-03	E
Venturi/impingement/afterburner									
Venturi/impingement	1.2 E+00	2.4 E-03	E						
Venturi/impingement/Wet ESP									
Venturi/Wet ESP									

Table 2.2-4 (cont.).

Source Category[b]	Acetonitrile[c]			Acrylonitrile[c]			Benzene[c]		
	g/Mg	lb/ton	EMISSION FACTOR RATING	g/Mg	lb/ton	EMISSION FACTOR RATING	g/Mg	lb/ton	EMISSION FACTOR RATING
Uncontrolled	2.5 E+01	5.0 E-02	E	2.5 E+01	5.0 E-02	E	5.8 E+00	1.2 E-02	D
Controlled									
Cyclone									
Cyclone/impingement									
Cyclone/venturi				1.5 E-01	3.0 E-04	E	3.5 E-01	7.0 E-04	E
Cyclone/venturi/impingement									
Electrostatic precipitator									
Fabric filter									
Impingement									
Venturi							1.4 E+01	2.8 E-02	E
Venturi/impingement/ afterburner	7.4 E-01	1.5 E-03	E	4.9 E-01	9.8 E-04	E	1.7 E-01	3.4 E-04	E
Venturi/impingement	9.7 E+00	2.0 E-02	E	1.7 E+01	3.4 E-02	E	6.3 E+00	1.3 E-02	D
Venturi/impingement/Wet ESP									
Venturi/Wet ESP									

Table 2.2-4. (cont.).

Source Category[b]	Bis(2-ethylhexyl)phthalate[c]			Bromodichloromethane			Carbon Tetrachloride[c]		
	g/Mg	lb/ton	EMISSION FACTOR RATING	g/Mg	lb/ton	EMISSION FACTOR RATING	g/Mg	lb/ton	EMISSION FACTOR RATING
Uncontrolled	9.3 E-01	1.9 E-03	E	4.0 E-03	8.0 E-06	E	1.0 E-02	2.0 E-05	E
Controlled									
Cyclone									
Cyclone/impingement									
Cyclone/venturi	4.0 E-02	8.0 E-05	E				7.0 E-03	1.4 E-05	E
Cyclone/venturi/impingement									
Electrostatic precipitator									
Fabric filter									
Impingement									
Venturi				1.5 E+00	3.0 E-03	E			
Venturi/impingement/ afterburner							1.0 E-03	2.0 E-06	E
Venturi/impingement	3.2 E-01	6.4 E-04	E				3.0 E-02	6.0 E-05	D
Venturi/impingement/Wet ESP									
Venturi/Wet ESP									

Table 2.2-4 (cont.).

Source Category[b]	Chlorobenzene[c]			Chloroform[c]		
	g/Mg	lb/ton	EMISSION FACTOR RATING	g/Mg	lb/ton	EMISSION FACTOR RATING
Uncontrolled	7.5 E-01	1.5 E-03	E	3.0 E-02	6.0 E-05	E
Controlled						
Cyclone						
Cyclone/impingement						
Cyclone/venturi	6.0 E-03	1.2 E-05	E	2.0 E-02	4.0 E-05	E
Cyclone/venturi/impingement						
Electrostatic precipitator						
Fabric filter						
Impingement						
Venturi	4.2 E+00	8.4 E-03	E	3.3 E+00	6.6 E-03	E
Venturi/impingement/afterburner	2.6 E-01	5.2 E-04	E	4.9 E-01	9.8 E-04	E
Venturi/impingement	6.0 E-01	1.2 E-03	E	1.3 E+00	2.6 E-03	D
Venturi/impingement/Wet ESP						
Venturi/Wet ESP						

Table 2.2-4 (cont.).

Source Category[b]	Ethylbenzene[c]			Formaldehyde[c]			Methyl Ethyl Ketone[c]		
	g/Mg	lb/ton	EMISSION FACTOR RATING	g/Mg	lb/ton	EMISSION FACTOR RATING	g/Mg	lb/ton	EMISSION FACTOR RATING
Uncontrolled	8.0 E-01	1.6 E-03	E				6.1 E+00	1.2 E-02	E
Controlled									
Cyclone									
Cyclone/impingement									
Cyclone/venturi	3.0 E-03	6.0 E-06	E	1.3 E+00	2.6 E-03	E			
Cyclone/venturi/impingement									
Electrostatic precipitator									
Fabric filter									
Impingement									
Venturi	6.0 E+00	1.2 E-02	E	4.0 E-01	8.0 E-04	E	6.1 E+00	1.2 E-02	E
Venturi/impingement/ afterburner	2.0 E-02	4.0 E-05	E				5.0 E-02	1.0 E-04	E
Venturi/impingement	1.0 E+00	2.0 E-03	D				8.9 E+00	1.8 E-02	E
Venturi/impingement/Wet ESP									
Venturi/Wet ESP									

Table 2.2-4 (cont.).

Source Category[b]	Methyl Isobutyl Ketone[c]			Methylene Chloride[c]			Naphthalene[c]		
	g/Mg	lb/ton	EMISSION FACTOR RATING	g/Mg	lb/ton	EMISSION FACTOR RATING	g/Mg	lb/ton	EMISSION FACTOR RATING
Uncontrolled				4.0 E-01	8.0 E-04	D	9.2 E+00	1.8 E-02	E
Controlled									
Cyclone									
Cyclone/impingement	1.0 E-02	2.0 E-05	E						
Cyclone/venturi				3.0 E-01	6.0 E-04	E	9.7 E-01	1.9 E-03	D
Cyclone/venturi/impingement									
Electrostatic precipitator									
Fabric filter									
Impingement									
Venturi									
Venturi/impingement/ afterburner				4.0 E-01	8.0 E-04	E			
Venturi/impingement				9.0 E-01	1.8 E-03	D			
Venturi/impingement/Wet ESP									
Venturi/Wet ESP									

Table 2.2-4 (cont.).

Source Category[b]	Perchloroethylene[c]			Phenol[c]			Tetrachloroethane[c]		
	g/Mg	lb/ton	EMISSION FACTOR RATING	g/Mg	lb/ton	EMISSION FACTOR RATING	g/Mg	lb/ton	EMISSION FACTOR RATING
Uncontrolled	4.0 E-01	8.0 E-04	E	2.2 E+01	4.4 E-02	E			
Controlled									
Cyclone									
Cyclone/impingement									
Cyclone/venturi	3.0 E-01	6.0 E-04	E						
Cyclone/venturi/impingement									
Electrostatic precipitator									
Fabric filter									
Impingement									
Venturi	2.0 E-01	4.0 E-04	E				1.2 E+01	2.4 E-02	E
Venturi/impingement/ afterburner									
Venturi/impingement				1.8 E+00	3.6 E-03	E			
Venturi/impingement/Wet ESP									
Venturi/Wet ESP									

Table 2.2-4 (cont.).

Source Category[b]	Toluene[c]			Trans-1,2-Dichloroethene[c]			Trichloroethene[c]		
	g/Mg	lb/ton	EMISSION FACTOR RATING	g/Mg	lb/ton	EMISSION FACTOR RATING	g/Mg	lb/ton	EMISSION FACTOR RATING
Uncontrolled	7.8 E+00	1.5 E-02	D	9.0 E-02	1.8 E-04	E	4.0 E-01	8.0 E-04	E
Controlled									
Cyclone									
Cyclone/impingement									
Cyclone/venturi	3.3 E+00	6.6 E-03	E						
Cyclone/venturi/impingement									
Electrostatic precipitator									
Fabric filter									
Impingement									
Venturi	1.6 E+01	3.0 E-02	E						
Venturi/impingement/ afterburner	6.6 E-01	1.3 E-03	E	4.0 E-02	8.0 E-05	D			
Venturi/impingement	6.5 E+00	1.3 E-02	D	5.0 E-02	1.0 E-04	E	4.5 E-01	9.0 E-04	E
Venturi/impingement/Wet ESP									
Venturi/Wet ESP									

Table 2.2-4. (cont.).

Source Category[b]	Vinyl Chloride[c]			Xylene, m,p[c]			Xylene (total)[c]		
	g/Mg	lb/ton	EMISSION FACTOR RATING	g/Mg	lb/ton	EMISSION FACTOR RATING	g/Mg	lb/ton	EMISSION FACTOR RATING
Uncontrolled	6.6 E+00	1.3 E-02	E				9.5 E-01	1.9 E-03	E
Controlled									
Cyclone									
Cyclone/impingement									
Cyclone/venturi	1.0 E+00	2.0 E-03	E						
Cyclone/venturi/impingement									
Electrostatic precipitator	8.0 E-01	1.6 E-03	E						
Fabric filter									
Impingement									
Venturi				2.0 E+00	4.0 E-03	E			
Venturi/impingement/ afterburner									
Venturi/impingement	3.7 E+00	7.4 E-03	D						
Venturi/impingement/Wet ESP									
Venturi/Wet ESP									

[a] Units are pollutants emitted of dry sludge burned. Source Classification Code 5-01-005-15. Blanks indicate no data.
[b] Wet ESP = wet electrostatic precipitator.
[c] Hazardous air pollutants in the *Clean Air Act*.

Table 2.2-5 (Metric And English Units). SUMMARY OF METAL EMISSIONS FROM MULTIPLE HEARTH SEWAGE SLUDGE INCINERATORS[a]

Source Category[b]	Aluminum			Antimony[c]			Arsenic[c]		
	g/Mg	lb/ton	EMISSION FACTOR RATING	g/Mg	lb/ton	EMISSION FACTOR RATING	g/Mg	lb/ton	EMISSION FACTOR RATING
Uncontrolled	2.4 E+02	4.8E-01	D	1.5 E+00	3.0 E-03	E	4.7 E+00	9.4 E-03	B
Controlled									
Cyclone	3.0 E-01	6.0E-04	E	3.2 E-01	6.4 E-04	E			
Cyclone/impingement									
Cyclone/venturi							1.0 E-01	2.0 E-04	E
Cyclone/venturi/impingement							8.5 E-01	1.7 E-03	E
Electrostatic precipitator	3.8 E+02	7.6 E-02	E	4.0 E-02	8.0 E-05	E	1.2 E+00	2.4 E-03	E
Fabric filter	6.8 E-01		E	4.0 E-03	8.0 E-06	E	3.0 E-03	6.0 E-06	E
Impingement									
Venturi							5.0 E-02	1.0 E-04	E
Venturi/impingement/ afterburner							4.0 E-02	8.0 E-05	E
Venturi/impingement	9.2 E+01	1.8E-01	E	2.4 E-01	4.8 E-04	E	6.1 E-01	1.2 E-03	B
Venturi/impingement/ Wet ESP									
Venturi/Wet ESP							6.0 E-01	1.2 E-03	E

Table 2.2-5. (cont.).

Source Category[b]	Barium			Beryllium[c]			Cadmium[c]		
	g/Mg	lb/ton	EMISSION FACTOR RATING	g/Mg	lb/ton	EMISSION FACTOR RATING	g/Mg	lb/ton	EMISSION FACTOR RATING
Uncontrolled	1.5 E+01	3.0 E-02	D	1.5 E-01	3.0 E-04	E	1.6 E+01	3.7 E-02	B
Controlled									
Cyclone	1.0 E-01	2.0 E-04	E	9.0 E-03	1.8 E-05	D	1.7 E+01	3.4 E-02	D
Cyclone/impingement									
Cyclone/venturi							1.3 E+01	2.6 E-02	C
Cyclone/venturi/impingement							8.1 E+00	1.6 E-02	E
Electrostatic precipitator	7.4 E+00	1.5 E-02	E				1.7 E-01	3.4 E-04	E
Fabric filter	4.0 E-03	8.0 E-06	E				1.0 E-02	2.0 E-05	E
Impingement							1.2 E+00	2.4 E-03	E
Venturi							1.1 E-01	2.2 E-04	E
Venturi/impingement/ afterburner							3.0 E+00	6.0 E-03	E
Venturi/impingement	3.2 E+00	6.4 E-03	D	5.0 E-03	1.0 E-05	E	3.3 E+00	6.6 E-03	E
Venturi/impingement/ Wet ESP							1.0 E-01	2.0 E-04	E
Venturi/Wet ESP							4.0 E-02	8.0 E-05	E

Table 2.2-5 (cont.).

Source Category[b]	Calcium			Chromium[c]			Cobalt[c]		
	g/Mg	lb/ton	EMISSION FACTOR RATING	g/Mg	lb/ton	EMISSION FACTOR RATING	g/Mg	lb/ton	EMISSION FACTOR RATING
Uncontrolled	7.0 E+02	1.4 E+00	C	1.4 E+01	2.9 E-02	B	9.0 E-01	1.8 E-03	C
Controlled									
Cyclone	1.2 E+00	2.4 E-03	E	1.9 E+00	3.8 E-03	D	2.0 E-01	4.0 E-04	E
Cyclone/impingement				4.0 E-02	8.0 E-05	E			
Cyclone/venturi				5.0 E-01	1.0 E-03	E			
Cyclone/venturi/impingement				1.1 E+01	2.7 E-02	E			
Electrostatic precipitator	3.5 E+02	7.0 E-01	E	1.4 E+00	2.8 E-03	E	3.8 E-01	7.6 E-04	E
Fabric filter	8.0 E-02	1.6 E-04	E	4.0 E-02	8.0 E-05	E	6.0 E-03	1.2 E-05	E
Impingement				9.8 E+00	1.9 E-02	E			
Venturi				5.0 E-01	1.0 E-03	E			
Venturi/impingement/ afterburner				4.9 E+00	9.8 E-03	E			
Venturi/impingement	2.6 E+02	5.2 E-01	D	2.1 E+00	4.2 E-03	E	4.5 E-01	9.0 E-04	D
Venturi/impingement/Wet ESP				1.1 E-01	2.2 E-04	E			
Venturi/Wet ESP				1.0 E-02	2.0 E-05	E			

Table 2.2-5 (cont.).

Source Category[b]	Copper			Gold			Iron		
	g/Mg	lb/ton	EMISSION FACTOR RATING	g/Mg	lb/ton	EMISSION FACTOR RATING	g/Mg	lb/ton	EMISSION FACTOR RATING
Uncontrolled	4.0 E+01	8.0 E-02	B	3.0 E-02	6.0 E-05	E	5.6 E+02	1.1 E+00	C
Controlled									
Cyclone	2.7 E+00	5.4 E-03	E				1.7 E+00	3.4 E-03	E
Cyclone/impingement									
Cyclone/venturi	1.0 E+00	2.0 E-03	E						
Cyclone/venturi/impingement									
Electrostatic precipitator	2.0 E-01	4.0 E-04	E	9.0 E-03	1.8 E-05	E	2.5 E+01	5.0 E-02	E
Fabric filter	2.0 E-03	4.0 E-06	E	2.0 E-03	4.0 E-06	E	2.3 E-01	4.6 E-04	E
Impingement									
Venturi	4.0 E-01	8.0 E-04	E						
Venturi/impingement/afterburner	5.8 E+00	1.2 E-02	E						
Venturi/impingement	5.5 E+00	1.1 E-02	D	1.0 E-02	2.0 E-05	E	4.8 E+01	9.6 E-02	D
Venturi/impingement/Wet ESP									
Venturi/Wet ESP	1.0 E-02	2.0 E-05	E						

Table 2.2-5 (cont.).

Source Category[b]	Manganese[c]			Magnesium			Mercury[c]		
	g/Mg	lb/ton	EMISSION FACTOR RATING	g/Mg	lb/ton	EMISSION FACTOR RATING	g/Mg	lb/ton	EMISSION FACTOR RATING
Uncontrolled	9.4 E+00	1.9 E-02	C	1.4 E+02	2.8 E-01	C			
Controlled									
Cyclone	3.3 E-01	6.6 E-04	E	1.4 E+00	2.8 E-03	E	2.3 E+00	4.6E-03	E
Cyclone/impingement									
Cyclone/venturi							1.6 E+00	3.2E-03	E
Cyclone/venturi/impingement									
Electrostatic precipitator	3.2 E-01	6.4 E-04	E	8.8 E+00	1.8 E-02	E			
Fabric filter	5.0 E-03	1.0 E-05	E	3.0 E-02	6.0 E-05	E			
Impingement							9.7 E-01	1.9E-03	E
Venturi									
Venturi/impingement/afterburner									
Venturi/impingement	8.5 E-01	1.7 E-03	D	4.2 E+00	8.4 E-03	D	5.0 E-03	1.0E-05	E
Venturi/impingement/Wet ESP									
Venturi/Wet ESP									

Table 2.2-5 (cont.).

Source Category[b]	Nickel[c]			Phosphorus[c]			Potassium		
	g/Mg	lb/ton	EMISSION FACTOR RATING	g/Mg	lb/ton	EMISSION FACTOR RATING	g/Mg	lb/ton	EMISSION FACTOR RATING
Uncontrolled	8.0 E+00	1.6 E-02	B	3.8 E+02	7.6 E-01	D	5.3 E+01	1.1 E-01	E
Controlled									
Cyclone	8.0 E-02	1.6 E-04	E	8.9 E+00	1.8 E-02	E	9.0 E-01	1.8 E-03	E
Cyclone/impingement	1.3 E+00	2.6 E-03	D						
Cyclone/venturi	3.5 E-01	7.0 E-04	E						
Cyclone/venturi/impingement	4.5 E+00	9.0 E-03	E						
Electrostatic precipitator	2.0 E+00	4.0 E-03	E	6.9 E+00	1.4 E-02	E			
Fabric filter	1.4 E-02	2.8 E-05	E	2.0 E-01		E			
Impingement	4.1 E+00	8.2 E-03	E						
Venturi	6.0 E-02	1.2 E-04	E	9.6 E-01	1.9 E-03	E			
Venturi/impingement/afterburner	9.0 E-01	1.8 E-03	E						
Venturi/impingement	9.0 E-01	1.8 E-03	A	1.2 E+01	2.4 E-02	D	7.3 E+00	1.4 E-02	E
Venturi/impingement/Wet ESP									
Venturi/Wet ESP	3.0 E-03	6.0 E-06	E						

Table 2.2-5 (cont.).

Source Category[b]	Selenium[c]			Silicon			Silver		
	g/Mg	lb/ton	EMISSION FACTOR RATING	g/Mg	lb/ton	EMISSION FACTOR RATING	g/Mg	lb/ton	EMISSION FACTOR RATING
Uncontrolled	1.5 E-01	3.0 E-04	D	3.4 E+02	6.8 E-01	E	6.5 E-01	1.3 E-03	E
Controlled									
Cyclone				4.6 E+00	9.2 E-03	E			
Cyclone/impingement									
Cyclone/venturi									
Cyclone/venturi/impingement									
Electrostatic precipitator							6.0 E-03	1.2 E-05	E
Fabric filter	1.2 E-01	2.4 E-04	E				1.0 E-04	2.0 E-07	E
Impingement									
Venturi	6.0 E-02	1.2 E-04	E				4.0 E-01	8.0 E-04	E
Venturi/impingement/afterburner									
Venturi/impingement				4.4 E+01	8.8 E-02	E	9.0 E-02	1.8 E-04	E
Venturi/impingement/Wet ESP									
Venturi/Wet ESP									

Table 2.2-5 (cont.).

Source Category[b]	Sodium			Sulfur			Tin		
	g/Mg	lb/ton	EMISSION FACTOR RATING	g/Mg	lb/ton	EMISSION FACTOR RATING	g/Mg	lb/ton	EMISSION FACTOR RATING
Uncontrolled	4.7 E+01	9.4 E-02	C	3.6 E+03	7.2 E-00	D	1.3 E+01	2.6 E-02	C
Controlled									
Cyclone	1.8 E+00	3.6 E-03	E	1.9 E+01	3.9 E-02	E	5.9 E+00	1.2 E-02	E
Cyclone/impingement									
Cyclone/venturi									
Cyclone/venturi/impingement									
Electrostatic precipitator	5.5 E-01	1.1 E-03	E				2.0 E-01	4.0 E-04	E
Fabric filter	1.0 E-02	2.0 E-05	E	6.0 E+01	1.2 E-01	E	2.0 E-02	4.0 E-05	E
Impingement									
Venturi									
Venturi/impingement/afterburner									
Venturi/impingement	1.4 E+01	2.8 E-02	D	1.1 E+02	2.2 E-01	E	7.9 E+00	1.6 E-02	D
Venturi/impingement/Wet ESP									
Venturi/Wet ESP									

Table 2.2-5 (cont.).

Source Category[b]	Titanium			Vanadium			Zinc		
	g/Mg	lb/ton	EMISSION FACTOR RATING	g/Mg	lb/ton	EMISSION FACTOR RATING	g/Mg	lb/ton	EMISSION FACTOR RATING
Uncontrolled	5.1 E+01	1.0 E-01	C	3.3 E+00	6.6 E-03	C	6.6 E+01	1.3 E-01	C
Controlled							1.1 E+01	2.2 E-02	E
Cyclone	1.0 E-01	2.0 E-04	E	3.0 E-01	6.0 E-04	E			
Cyclone/impingement									
Cyclone/venturi							3.8 E+01	7.6 E-02	E
Cyclone/venturi/impingement									
Electrostatic precipitator	9.0 E-01	1.8 E-03	E	9.9 E-01	2.0 E-03	E	3.9 E-01	7.8 E-04	E
Fabric filter	6.0 E-03	1.2 E-05	E	2.0 E-03	4.0 E-06	E	4.0 E-02	8.0 E-05	E
Impingement									
Venturi							4.4 E+00	8.8 E-03	E
Venturi/impingement/ afterburner							3.3 E+01	6.6 E-02	E
Venturi/impingement	3.1 E+00	6.2 E-03	D	8.0 E-01	1.6 E-03	E	2.4 E+01	4.8 E-02	C
Venturi/impingement/Wet ESP									
Venturi/Wet ESP							2.0 E-01	4.0 E-04	E

[a] Units are pollutants emitted of dry sludge burned. Source Classification Code 5-01-005-15. Blanks indicate no data.
[b] Wet ESP = wet electrostatic precipitator.
[c] Hazardous air pollutants listed in the *Clean Air Act*.

Table 2.2-6 (Metric And English Units). CRITERIA POLLUTANT EMISSION FACTORS FOR FLUIDIZED BED SEWAGE SLUDGE INCINERATORS[a]

EMISSION FACTOR RATING: E

Source Category[b]	Particulate Matter		Sulfur Dioxide		Nitrogen Oxides[c]	
	kg/Mg	lb/ton	kg/Mg	lb/ton	kg/Mg	lb/ton
Uncontrolled	2.3 E+02	4.6 E+02	1.5 E-01	3.0 E-01	8.8 E-01	1.7 E+00
Controlled						
Cyclone						
Cyclone/impingement						
Cyclone/venturi						
Cyclone/venturi/impingement	5.0 E-01	1.0 E+00				
Electrostatic precipitator						
Fabric filter						
Impingement	1.3 E-01	2.6 E-01	3.0 E-01	6.0 E-01		
Venturi	5.7 E-01		9.2 E+00	1.8 E+01		
Venturi/impingement/afterburner						
Venturi/impingement	2.7 E-01	1.1 E+00	4.0 E-01	8.0 E-01		
Venturi/impingement/Wet ESP	1.0 E-01	2.0 E-01				
Venturi/Wet ESP						

Table 2.2-6 (cont.).

Source Category[b]	Carbon Monoxide[c] (CO)		Lead[d]		Methane VOC	
	kg/Mg	lb/ton	kg/Mg	lb/ton	kg/Mg	lb/ton
Uncontrolled	1.1 E+00	2.1 E+00	2.0 E-02	4.0 E-02		
Controlled						
Cyclone						
Cyclone/impingement						
Cyclone/venturi						
Cyclone/venturi/impingement						
Electrostatic precipitator						
Fabric filter			5.0 E-06	1.0 E-05		
Impingement			3.0 E-03	6.0 E-03		
Venturi					1.6 E+00	3.2 E+00
Venturi/impingement/afterburner						
Venturi/impingement			8.0 E-02	1.6 E-01	4.0 E-01	8.0 E-01
Venturi/impingement/Wet ESP			1.0 E-06	2.0 E-06		
Venturi/Wet ESP						

[a] Units are pollutants emitted of dry sludge burned. Source Classification Code 5-01-005-16.
[b] Wet ESP = wet electrostatic precipitator.
[c] Uncontrolled Emission Factors for NO_x and CO apply to all Air Pollution Control Device Types.
[d] Hazardous air pollutants listed in the *Clean Air Act*.

Table 2.2-7 (Metric And English Units). ACID GAS AND ORGANIC COMPOUND EMISSION FACTORS FOR FLUIDIZED BED SEWAGE SLUDGE INCINERATORS[a]

EMISSION FACTOR RATING: E

Pollutant	Uncontrolled		Impingement		Venturi/Impingement		Cyclone/Impingement	
	g/Mg	lb/ton	g/Mg	lb/ton	g/Mg	lb/ton	g/Mg	lb/ton
Sulfuric Acid (H_2SO_4)			3.0 E+01	6.0 E-02	6.0 E+01	1.2 E-01		
Hydrogen Chloride (HCl)[b]					5.0 E+01	1.0 E-01		
2,3,7,8-TCDD[b]					3.0 E-07	6.0 E-10		
Total TCDD					2.2 E-06	4.4 E-09		
Total PCDD	1.1 E-06	2.2 E-09						
Total HxCDD					9.0 E-07	1.8 E-09		
Total HpCDD					9.0 E-07	1.8 E-09		
Total OCDD					4.3 E-06	8.6 E-09		
2,3,7,8-TCDF[b]					2.0 E-07	4.0 E-10		
Total TCDF[b]					6.2 E-06	1.2 E-08		
Total PCDF[b]					5.2 E-06	1.0 E-08		
Total HxCDF[b]					4.1 E-06	8.2 E-09		
Total HpCDF[b]					1.6 E-06	3.2 E-09		
Total OCDF[b]					1.3 E-06	2.6 E-09		
1,1,1-Trichloroethane[b]					2.6 E-01	5.2 E-04		
1,2-Dichlorobenzene					6.4 E+01	1.3 E-01		
1,4-Dichlorobenzene[b]					2.4 E+02	4.8 E-01		
Benzene[b]					2.0 E-01	4.0 E-04		
Bis(2-ethylhexyl)phthalate[b]					4.1 E+01	8.2 E-02		
Carbon Tetrachloride[b]					1.2 E-02	2.4 E-05		
Chlorobenzene[b]					5.0 E-03	1.0 E-05		

Table 2.2-7 (cont.).

Pollutant	Uncontrolled		Impingement		Venturi/Impingement		Cyclone/Impingement	
	g/Mg	lb/ton	g/Mg	lb/ton	g/Mg	lb/ton	g/Mg	lb/ton
Chloroform[b]					2.0 E+00	4.0 E-03		
Ethylbenzene[b]					2.5 E-02	5.0 E-05		
Methylene Chloride[b]					7.0 E-01	1.4 E-03		
Naphthalene[b]					9.7 E+01	1.9 E-01		
Perchloroethylene[b]					1.2 E-01	2.4 E-04		
Toluene[b]							3.5 E-01	7.0 E-04
Trichloroethene[b]					3.0 E-02	6.0 E-05		

[a] Units are pollutants emitted of dry sludge burned. Source Classification Code 5-01-005-16. Blanks indicate no data.
[b] Hazardous air pollutants listed in the *Clean Air Act*.

Table 2.2-8 (Metric And English Units). METAL EMISSION FACTORS FOR FLUIDIZED BED SEWAGE SLUDGE INCINERATORS[a]

EMISSION FACTOR RATING: E

Pollutant	Uncontrolled		Impingement		Venturi/Impingement		Venturi/Impingment/ Wet ESP[b]	
	g/Mg	lb/ton	g/Mg	lb/ton	g/Mg	lb/ton	g/Mg	lb/ton
Aluminum					1.9 E+00	3.8 E-03		
Arsenic[c]	2.2 E+00	4.4 E-03			1.5 E-02	3.0 E-05	5.0 E-03	1.0 E-05
Barium					2.4 E-01	4.8 E-04		
Beryllium[c]					2.0 E-04	4.0 E-07	2.0 E-04	4.0 E-07
Cadmium[c]	2.2 E+00	4.4 E-03	4.0 E-01	8.0 E-04	5.7 E-01	1.1 E-03	1.0 E-03	2.0 E-06
Calcium[c]					5.2 E+00	1.0 E-02		
Chromium[c]			3.2 E-01	6.4 E-04	2.5 E-01	5.0 E-04	3.0 E-02	6.0 E-05
Copper					3.0 E-01	6.0 E-04		
Manganese[c]					3.0 E-01	6.0 E-04		
Magnesium					6.0 E-01	1.2 E-03		
Mercury[c]					3.0 E-02	6.0 E-05		
Nickel[c]	1.78 E+01	3.5 E-02			1.7 E+00	3.4 E-03	5.0E-03	1.0E-05
Potassium					6.0 E-01	1.2 E-03		
Selenium[c]					2.0 E-01	4.0 E-04		
Silicon					3.2 E+00	6.4 E-03		
Sulfur					8.6 E+00	1.7 E-02		
Tin					3.5 E-01	7.0 E-04		
Titanium					4.0 E-01	8.0 E-04		
Zinc					1.0 E+00	2.0 E-03		

[a] Units are pollutants emitted of dry sludge burned. Source Classification Code 5-01-005-16.
[b] Wet ESP = wet electrostatic precipitator.
[c] Hazardous air pollutants listed in the *Clean Air Act*.

Table 2.2-9 (Metric And English Units). SUMMARY OF EMISSION FACTORS FOR ELECTRIC INFRARED SEWAGE SLUDGE INCINERATORS[a]

EMISSION FACTOR RATING: E

Source Category[b]	Particulate Matter		Sulfur Dioxide		Nitrogen Oxides	
	kg/Mg	lb/ton	kg/Mg	lb/ton	kg/Mg	lb/ton
Uncontrolled	3.7 E+00	7.4 E+00	9.2 E+00	1.8 E+01	4.3 E+00	8.6 E+00
Controlled						
Cyclone						
Cyclone/impingement						
Cyclone/venturi	1.9 E+00	3.8 E+00				
Cyclone/venturi/impingement						
Electrostatic precipitator						
Fabric filter						
Impingement	8.2 E-01	1.6 E+00				
Venturi						
Venturi/impingement/ afterburner						
Venturi/impingement	9.5 E-01	1.9 E+00	2.3 E+00	4.6 E+00	2.9 E+00	5.8 E+00
Venturi/impingement/ Wet ESP						
Venturi/Wet ESP						

[a] Units are pollutants emitted of dry sludge burned. Source Classification Code 5-01-005-17.
[b] Wet ESP = wet electrostatic precipitator.

Table 2.2-10 (Metric And English Units). CUMULATIVE PARTICLE SIZE DISTRIBUTION FOR SEWAGE SLUDGE INCINERATORS[a]

EMISSION FACTOR RATING: E

Particle Size (μm)	Cumulative Mass % Stated Size				
	Uncontrolled		Controlled (Scrubber)		
	MH[b]	EI[c]	MH	FB[d]	EI
15	15	43	30	7.7	60
10	10	30	27	7.3	50
5.0	5.3	17	25	6.7	35
2.5	2.8	10	22	6.0	25
1.0	1.2	6.0	20	5.0	18
0.625	0.75	5.0	17	2.7	15

[a] Reference 5.
[b] MH = multiple hearth incinerator. Source Classification Code (SCC) 5-01-005-15.
[c] EI = electric infrared incinerator. SCC 5-01-005-17.
[d] FB = fluidized bed incinerator. SCC 5-01-005-16.

Table 2.2-11 (Metric And English Units). CUMULATIVE PARTICLE SIZE-SPECIFIC EMISSION FACTORS FOR SEWAGE SLUDGE INCINERATORS[a]

EMISSION FACTOR RATING: E

Particle Size (μm)	Cumulative Emission Factor									
	Uncontrolled				Controlled (Scrubber)					
	MH[b]		EI[c]		MH		FB[d]		EI	
	kg/Mg	lb/ton	kg/Mg	lb/ton	kg/Mg	lb/ton	kg/Mg	lb/ton	kg/Mg	lb/ton
15	6.0 E+00	1.2 E+01	4.3 E+00	8.6 E+00	1.2 E-01	2.4 E-01	2.3 E-01	4.6 E-01	1.2 E+00	2.4 E+00
10	4.1 E+00	8.2 E+00	3.0 E+00	6.0 E+00	1.1 E-01	2.2 E-01	2.2 E-01	4.4 E-01	1.0 E+00	2.0 E+00
5.0	2.1 E+00	4.2 E+00	1.7 E+00	3.4 E+00	1.0 E-01	2.0 E-01	2.0 E-01	4.0 E-01	7.0 E-01	1.4 E+00
2.5	1.1 E+00	2.2 E+00	1.0 E+00	2.0 E+00	9.0 E-02	1.8 E-01	1.8 E-01	3.6 E-01	5.0 E-01	1.0 E+00
1.0	4.7 E-01	9.4 E-01	6.0 E-01	1.2 E+00	8.0 E-02	1.6 E-01	1.5 E-01	3.0 E-01	3.5 E-01	7.0 E-01
0.625	3.0 E-01	6.0 E-01	5.0 E-01	1.0 E+00	7.0 E-02	1.4 E-01	8.0 E-02	1.6 E-01	3.0 E-01	6.0 E-01

[a] Reference 5.
[b] MH = multiple hearth incinerator. Source Classification Code (SCC) 5-01-005-15.
[c] EI = electric infrared incinerator. SCC 5-01-005-17.
[d] FB = fluidized bed incinerator. SCC 5-01-005-16.

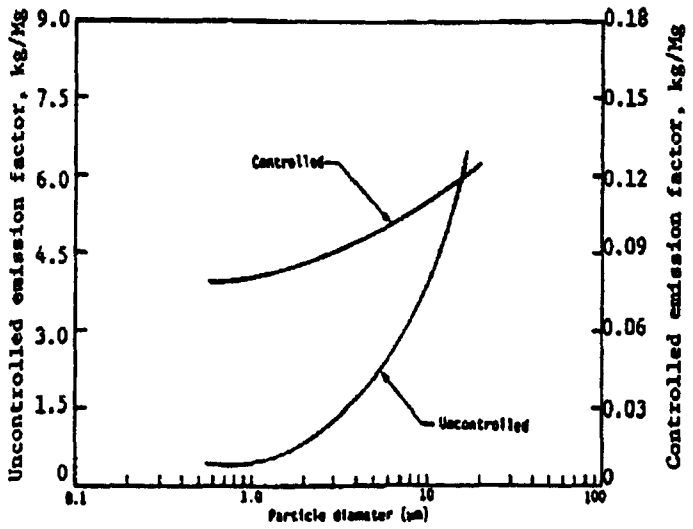

Figure 2.2-4. Cumulative Particle Size Distribution and Size-Specific Emission Factors for Multiple-Health Incinerators

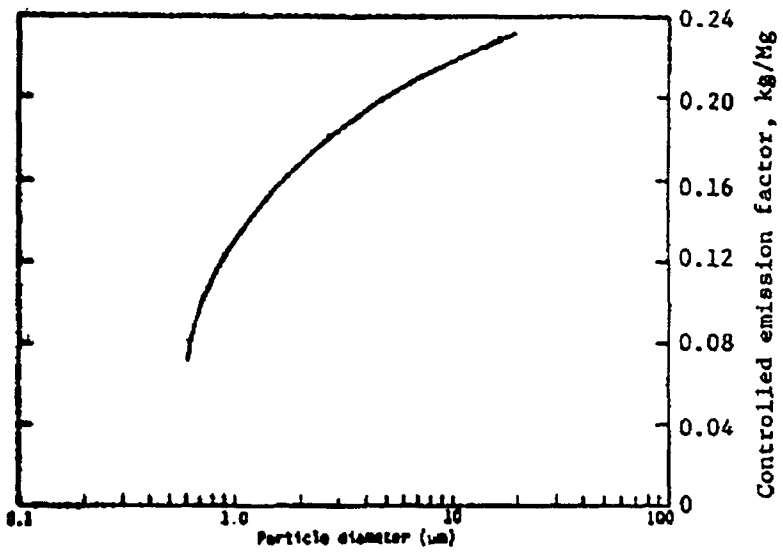

Figure 2.2-5. Cumulative Particle Size Distribution and Size-Specific Emission Factors for Fluidized-Bed Incinerators

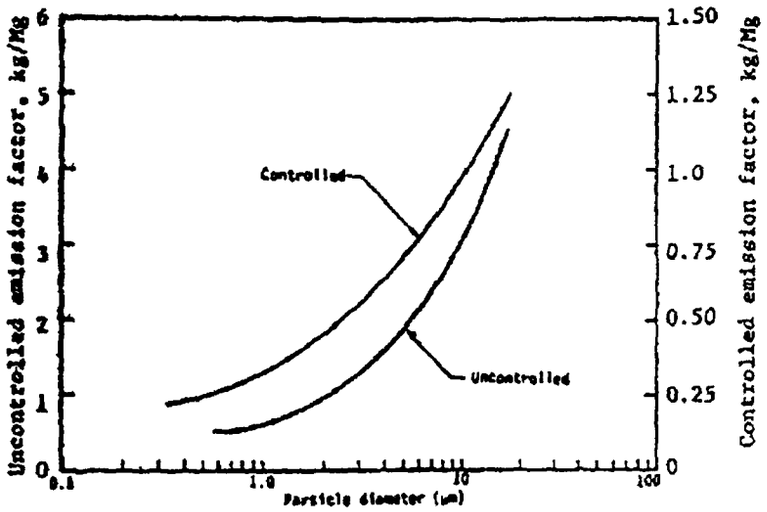

Figure 2.2-6. Cumulative Particle Size Distribution and Size-Specific Emission Factors for Electric (infrared) Incinerators

References For Section 2.2

1. *Second Review Of Standards Of Performance For Sewage Sludge Incinerators*, EPA-450/3-84-010, U. S. Environmental Protection Agency, Research Triangle Park, North Carolina, March 1984.

2. *Process Design Manual For Sludge Treatment And Disposal*, EPA-625/1-79-011, U. S. Environmental Protection Agency, Cincinnati, Ohio, September 1979.

3. *Control Techniques For Particulate Emissions From Stationary Sources - Volume 1*, EPA-450/3-81-005a, U. S. Environmental Protection Agency, Research Triangle Park, North Carolina, September 1982.

4. *Final Draft Test Report--Site 01 Sewage Sludge Incinerator SSI-A*, National Dioxin Study. Tier 4: Combustion Sources. EPA Contract No. 68-03-3148, U. S. Environmental Protection Agency, Research Triangle Park, North Carolina, July 1986.

5. *Final Draft Test Report--Site 03 Sewage Sludge Incinerator SSI-B*, National Dioxin Study. Tier 4: Combustion Sources. EPA Contract No. 68-03-3148, U. S. Environmental Protection Agency, Research Triangle Park, North Carolina, July 1986.

6. *Draft Test Report--Site 12 Sewage Sludge Incinerator SSI-C*, EPA Contract No. 68-03-3138, U. S. Environmental Protection Agency, Research Triangle Park, North Carolina, April 1986.

7. M. Trichon and R. T. Dewling, *The Fate Of Trace Metals In A Fluidized-Bed Sewage Sludge Incinerator*, (Port Washington). (GCA).

8. Engineering-Science, Inc., *Particulate And Gaseous Emission Tests At Municipal Sludge Incinerator Plants "O", "P", "Q", And "R" (4 tests)*, EPA Contract No. 68-02-2815, U. S. Environmental Protection Agency, McLean, Virginia, February 1980.

9. *Organics Screening Study Test Report. Sewage Sludge Incinerator No. 13, Detroit Water And Sewer Department, Detroit, Michigan*, EPA Contract No. 68-02-3849, PEI Associates, Inc., Cincinnati, Ohio, August 1986.

10. *Chromium Screening Study Test Report. Sewage Sludge Incinerator No. 13, Detroit Water And Sewer Department, Detroit Michigan*, EPA Contract No. 68-02-3849, PEI Associates, Inc., Cincinnati, Ohio, August 1986.

11. *Results Of The October 24, 1980, Particulate Compliance Test On The No. 1 Sludge Incinerator Wet Scrubber Stack, MWCC St. Paul Wastewater Treatment Plant in St. Paul, Minnesota*, [STAPPA/ALAPCO/05/27/86-No. 02], Interpoll Inc., Circle Pines, Minnesota, November 1980.

12. *Results Of The June 6, 1983, Emission Compliance Test On The No. 10 Incinerator System In The F&I 2 Building, MWCC Metro Plant, St. Paul, Minnesota*, [STAPPA/ALAPCO/ 05/27/86-No. 02], Interpoll Inc., Circle Pines, Minnesota, June 1983.

13. *Results Of The May 23, 1983, Emission Compliance Test On The No. 9 Incinerator System In The F&I 2 Building, MWCC Metro Plant, St. Paul, Minnesota*, [STAPPA/ALAPCO/ 05/27/86-No. 02], Interpoll Inc., Circle Pines, Minnesota, May 1983.

14. *Results Of The November 25, 1980, Particulate Emission Compliance Test On The No. 4 Sludge Incinerator Wet Scrubber Stack, MWCC St. Paul Wastewater Treatment Plant, St. Paul, Minnesota*, [STAPPA/ALAPCO/05/27/86-No. 02], Interpoll Inc., Circle Pines, Minnesota, December, 1980.

15. *Results Of The March 28, 1983, Particulate Emission Compliance Test On The No. 8 Incinerator, MWCC Metro Plant, St. Paul, Minnesota*, [STAPPA/ALAPCO/05/28/86-No. 06], Interpoll Inc., Circle Pines, Minnesota, April 1983.

16. *Particulate Emission Test Report For A Sewage Sludge Incinerator, City Of Shelby Wastewater Treatment Plant*, [STAPPA/ALAPCO/07/28/86-No. 06], North Carolina Department of Natural Resources, February 1979.

17. *Source Sampling Evaluation For Rocky River Wastewater Treatment Plant, Concord, North Carolina*, [STAPPA/ALAPCO/05/28/86-No. 06], Mogul Corp., Charlotte, North Carolina, July 1982.

18. *Performance Test Report: Rocky Mount Wastewater Treatment Facility*, [STAPPA/ALAPCO/ 07/28/86-No. 06], Envirotech, Belmont, California, July 1983.

19. *Performance Test Report For The Incineration System At The Honolulu Wastewater Treatment Plant, Honolulu, Oahu, Hawaii*, [STAPPA/ALAPCO/05/22/86-No. 11], Zimpro, Rothschild, Wisconsin, January 1984.

20. *(Test Results) Honolulu Wastewater Treatment Plant, Ewa, Hawaii*, [STAPPA/ALAPCO/05/22/86-No. 11], Zimpro, Rothschild, Wisconsin, November 1983.

21. *Air Pollution Source Test. Sampling And Analysis Of Air Pollutant Effluent From Wastewater Treatment Facility--Sand Island Wastewater Treatment Plant in Honolulu, Hawaii*, [STAPPA/ALAPCO/05/22/86-No. 11], Ultrachem, Walnut Creek, California, December 1978.

22. *Air Pollution Source Test. Sampling And Analysis Of Air Pollutant Effluent From Wastewater Treatment Facility--Sand Island Wastewater Treatment Plant In Honolulu, Hawaii--Phase II*, [STAPPA/ALAPCO/05/22/86-No. 11], Ultrachem, Walnut Creek, California, December 1979.

23. *Stationary Source Sampling Report, EEI Reference No. 2988, At The Osborne Wastewater Treatment Plant, Greensboro, North Carolina*, [STAPPA/ALAPCO/07/28/86-No. 06], Particulate Emissions and Particle Size Distribution Testing. Sludge Incinerator Scrubber Inlet and Scrubber Stack, Entropy, Research Triangle Park, North Carolina, October 1985.

24. *Metropolitan Sewer District--Little Miami Treatment Plant (three tests: August 9, 1985, September 16, 1980, And September 30, 1980) And Mill Creek Treatment Plant (one test: January 9, 1986)*, [STAPPA/ALAPCO/05/28/86-No. 14], Southwestern Ohio Air Pollution Control Agency.

25. *Particulate Emissions Compliance Testing, At The City Of Milwaukee South Shore Treatment Plant, Milwaukee, Wisconsin*, [STAPPA/ALAPCO/06/12/86-No. 19], Entropy, Research Triangle Park, North Carolina, December 1980.

26. *Particulate Emissions Compliance Testing, At The City of Milwaukee South Shore Treatment Plant, Milwaukee, Wisconsin*, [STAPPA/ALAPCO/06/12/86-No. 19], Entropy, Research Triangle Park, North Carolina, November 1980.

27. *Stack Test Report--Bayshore Regional Sewage Authority, In Union Beach, New Jersey*, [STAPPA/ALAPCO/05/22/86-No. 12], New Jersey State Department of Environmental Protection, Trenton, New Jersey, March 1982.

28. *Stack Test Report--Jersey City Sewage Authority, In Jersey City, New Jersey*, [STAPPA/ALAPCO/05/22/86-No. 12], New Jersey State Department of Environmental Protection, Trenton, New Jersey, December 1980.

29. *Stack Test Report--Northwest Bergen County Sewer Authority, In Waldwick, New Jersey*, [STAPPA/ALAPCO/05/22/86-No. 12], New Jersey State Department of Environmental Protection, Trenton, New Jersey, March 1982.

30. *Stack Test Report--Pequannock, Lincoln Park, And Fairfield Sewerage Authority, In Lincoln Park, New Jersey*, [STAPPA/ALAPCO/05/22/86-No. 12], New Jersey State Department of Environmental Protection, Trenton, New Jersey, December 1975.

31. *Atmospheric Emission Evaluation, Of The Anchorage Water And Wastewater Utility Sewage Sludge Incinerator*, ASA, Bellevue, Washington, April 1984.

32. *Stack Sampling Report For Municipal Sewage Sludge Incinerator No. 1, Scrubber Outlet (Stack), Providence, Rhode Island*, Recon Systems, Inc., Three Bridges, New Jersey, November 1980.

33. *Stack Sampling Report, Compliance Test No. 3, At The Attleboro Advanced Wastewater Treatment Facility, In Attleboro, Massachusetts*, David Gordon Associates, Inc., Newton Upper Falls, Massachusetts, May 1983.

34. *Source Emission Survey, At The Rowlett Creek Plant*, North Texas Municipal Water District, Plano, Texas, Shirco, Inc., Dallas, Texas, November 1978.

35. *Emissions Data For Infrared Municipal Sewage Sludge Incinerators (Five tests)*, Shirco, Inc., Dallas, Texas, January 1980.

37. *Electrostatic Precipitator Efficiency On A Multiple Hearth Incinerator Burning Sewage Sludge*, Contract No. 68-03-3148, U. S. Environmental Protection Agency, Research Triangle Park, North Carolina, August 1986.

38. *Baghouse Efficiency On A Multiple Hearth Incinerator Burning Sewage Sludge*, Contract No. 68-03-3148, U. S. Environmental Protection Agency, Research Triangle Park, North Carolina, August 1986.

39. J. B. Farrell and H. Wall, *Air Pollution Discharges From Ten Sewage Sludge Incinerators*, U. S. Environmental Protection Agency, Cincinnati, Ohio, August 1985.

40. *Emission Test Report. Sewage Sludge Incinerator, At The Davenport Wastewater Treatment Plant, Davenport, Iowa*, [STAPPA/ALAPCO/11/04/86-No. 119], PEDCo Environmental, Cincinnati, Ohio, October 1977.

41. *Sludge Incinerator Emission Testing. Unit No. 1 For City Of Omaha, Papillion Creek Water Pollution Control Plant*, [STAPPA/ALAPCO/10/28/86-No. 100], Particle Data Labs, Ltd., Elmhurst, Illinois, September 1978.

42. *Sludge Incinerator Emission Testing. Unit No. 2 For City Of Omaha, Papillion Creek Water Pollution Control Plant*, [STAPPA/ALAPCO/10/28/86-No. 100], Particle Data Labs, Ltd., Elmhurst, Illinois, May 1980.

43. *Particulate And Sulfur Dioxide Emissions Test Report For Zimpro On The Sewage Sludge Incinerator Stack at the Cedar Rapids Water Pollution Control Facility*, [STAPPA/ALAPCO/11/04/86-No. 119], Serco, Cedar Falls, Iowa, September 1980.

44. *Newport Wastewater Treatment Plant*, Newport, Tennessee. (Nichols; December 1979). [STAPPA/ALAPCO/10/27/86-No. 21].

45. *Maryville Wastewater Treatment Plant Sewage Sludge Incinerator Emission Test Report*, [STAPPA/ALAPCO/10/27/86-No. 21], Enviro-measure, Inc., Knoxville, Tennessee, August 1984.

46. *Maryville Wastewater Treatment Plant Sewage Sludge Incinerator Emission Test Report*, [STAPPA/ALAPCO/10/27/86-No. 21], Enviro-measure, Inc., Knoxville, Tennessee, October 1982.

47. *Southerly Wastewater Treatment Plant, Cleveland, Ohio, Incinerator No. 3*, [STAPPA/ALAPCO/11/12/86-No. 124], Envisage Environmental, Inc., Richfield, Ohio, May 1985.

48. *Southerly Wastewater Treatment Plant, Cleveland, Ohio. Incinerator No. 1*, [STAPPA/ALAPCO/11/12/86-No. 124], Envisage Environmental, Inc., Richfield, Ohio, August 1985.

49. *Final Report For An Emission Compliance Test Program (July 1, 1982), At The City Of Waterbury Wastewater Treatment Plant Sludge Incinerator, Waterbury, Connecticut*, [STAPPA/ALAPCO/12/17/86-No. 136], York Services Corp, July 1982.

50. *Incinerator Compliance Test, At The City Of Stratford Sewage Treatment Plant, Stratford, Connecticut*, [STAPPA/ALAPCO/12/17/86-No. 136], Emission Testing Labs, September 1974.

51. *Emission Compliance Tests At The Norwalk Wastewater Treatment Plant In South Smith Street, Norwalk, Connecticut*, [STAPPA/ALAPCO/12/17/86-No. 136], York Research Corp, Stamford, Connecticut, February 1975.

52. *Final Report--Emission Compliance Test Program At The East Shore Wastewater Treatment Plant In New Haven, Connecticut*, [STAPPA/ALAPCO/12/17/86-No. 136], York Services Corp., Stamford, Connecticut, September 1982.

53. *Incinerator Compliance Test At The Enfield Sewage Treatment Plant In Enfield, Connecticut*, [STAPPA/ALAPCO/12/17/86-No. 136], York Research Corp., Stamford, Connecticut, July 1973.

54. *Incinerator Compliance Test At The Glastonbury Sewage Treatment Plant In Glastonbury, Connecticut*, [STAPPA/ALAPCO/12/17/86-No. 136], York Research Corp., Stamford, Connecticut, August 1973.

55. *Results of the May 5, 1981, Particulate Emission Measurements of the Sludge Incinerator, at the Metropolitan District Commission Incinerator Plant*, [STAPPA/ALAPCO/12/17/86-No. 136], Henry Souther Laboratories, Hartford, Connecticut.

56. *Official Air Pollution Tests Conducted on the Nichols Engineering and Research Corporation Sludge Incinerator at the Wastewater Treatment Plant in Middletown, Connecticut*, [STAPPA/ALAPCO/12/17/86-No. 136], Rossnagel and Associates, Cherry Hill, New Jersey, November 1976.

57. *Measured Emissions From The West Nichols-Neptune Multiple Hearth Sludge Incinerator At The Naugatuck Treatment Company In Naugatuck, Connecticut*, [STAPPA/ALAPCO/12/17/86-No. 136], The Research Corp., East Hartford, Connecticut, April 1985.

58. *Compliance Test Report--(August 27, 1986), At The Mattabasset District Pollution Control Plant Main Incinerator In Cromwell, Connecticut*, [STAPPA/ALAPCO/12/17/86-No. 136], ROJAC Environmental Services, Inc., West Hartford, Connecticut, September 1986.

59. *Stack Sampling Report (May 21, 1986) City of New London No. 2 Sludge Incinerator Outlet Stack Compliance Test*, [STAPPA/ALAPCO/12/17/86-No. 136], Recon Systems, Inc., Three Bridges, New Jersey, June 1986.

60. *Particulate Emission Tests, At The Town of Vernon Municipal Sludge Incinerator in Vernon, Connecticut*, [STAPPA/ALAPCO/12/17/86-No. 136], The Research Corp., Wethersfield, Connecticut, March 1981.

61. *Non-Criteria Emissions Monitoring Program For The Envirotech Nine-Hearth Sewage Sludge Incinerator, At The Metropolitan Wastewater Treatment Facility In St. Paul, Minnesota*, ERT Document No. P-E081-500, October 1986.

62. D. R. Knisley, *et al.*, *Site 1 Revised Draft Emission Test Report, Sewage Sludge Test Program*, U. S. Environmental Protection Agency, Water Engineering Research Laboratory, Cincinnati, Ohio, February 9, 1989.

63. D. R. Knisley, *et al.*, *Site 2 Final Emission Test Report, Sewage Sludge Test Program*, U. S. Environmental Protection Agency, Water Engineering Research Laboratory, Cincinnati, Ohio, October 19, 1987.

64. D. R. Knisley, *et al.*, *Site 3 Draft Emission Test Report And Addendum, Sewage Sludge Test Program. Volume 1: Emission Test Results*, U. S. Environmental Protection Agency, Water Engineering Research Laboratory, Cincinnati, Ohio, October 1, 1987.

65. D. R. Knisley, *et al.*, *Site 4 Final Emission Test Report, Sewage Sludge Test Program*, U. S. Environmental Protection Agency, Water Engineering Research Laboratory, Cincinnati, Ohio, May 9, 1988.

66. R. C. Adams, *et al.*, *Organic Emissions from the Exhaust Stack of a Multiple Hearth Furnace Burning Sewage Sludge*, U. S. Environmental Protection Agency, Water Engineering Research Laboratory, Cincinnati, Ohio, September 30, 1985.

67. R. C. Adams, *et al.*, *Particulate Removal Evaluation Of An Electrostatic Precipitator Dust Removal System Installed On A Multiple Hearth Incinerator Burning Sewage Sludge*, U. S. Environmental Protection Agency, Water Engineering Research Laboratory, Cincinnati, Ohio, September 30, 1985.

68. R. C. Adams, *et al.*, *Particulate Removal Capability Of A Baghouse Filter On The Exhaust Of A Multiple Hearth Furnace Burning Sewage Sludge*, U. S. Environmental Protection Agency, Water Engineering Research Laboratory, Cincinnati, Ohio, September 30, 1985.

69. R. G. McInnes, *et al.*, *Sampling And Analysis Program At The New Bedford Municipal Sewage Sludge Incinerator*, GCA Corporation/Technology Division, U. S. Environmental Protection Agency, Research Triangle Park, North Carolina, November 1984.

70. R. T. Dewling, *et al.*, "Fate And Behavior Of Selected Heavy Metals In Incinerated Sludge." *Journal Of The Water Pollution Control Federation*, Vol. 52, No. 10, October 1980.

71. R. L. Bennet, *et al.*, *Chemical And Physical Characterization Of Municipal Sludge Incinerator Emissions*, Report No. EPA 600/3-84-047, NTIS No. PB 84-169325, U. S. Environmental Protection Agency, Environmental Sciences Research Laboratory, Research Triangle Park, North Carolina, March 1984.

72. Acurex Corporation. *1990 Source Test Data For The Sewage Sludge Incinerator*, Project 6595, Mountain View, California, April 15, 1991.

73. *Emissions Of Metals, Chromium, And Nickel Species, And Organics From Municipal Wastewater Sludge Incinerators, Volume I: Summary Report*, U. S. Environmental Protection Agency, Cincinnati, Ohio, 1992.

74. L. T. Hentz, *et al.*, *Air Emission Studies Of Sewage Sludge, Incinerators At The Western Branch Wastewater Treatment Plan*, Water Environmental Research, Vol. 64, No. 2, March/April, 1992.

75. *Source Emissions Testing Of The Incinerator #2 Exhaust Stack At The Central Costa Sanitary District Municipal Wastewater Treatment Plan, Mortmez, California*, Galson Technical Services, Berkeley, California, October, 1990.

76. R. R. Segal, *et al.*, *Emissions Of Metals, Chromium And Nickel Species, And Organics From Municipal Wastewater Sludge Incinerators, Volume II: Site 5 Test Report - Hexavalent Chromium Method Evaluation*, EPA 600/R-92/003a, March 1992.

77. R. R. Segal, *et al.*, *Emissions Of Metals, Chromium And Nickel Species, And Organics From Municipal Wastewater Sludge Incinerators, Volume III: Site 6 Test Report*, EPA 600/R-92/003a, March 1992.

78. A. L. Cone *et al.*, *Emissions Of Metals, Chromium, Nickel Species, And Organics From Municipal Wastewater Sludge Incinerators. Volume 5: Site 7 Test Report CEMS*, Entropy Environmentalists, Inc., Research Triangle Park, North Carolina, March 1992.

79. R. R. Segal, *et al.*, *Emissions Of Metals, Chromium And Nickel Species, And Organics From Municipal Wastewater Sludge Incinerators, Volume VI: Site 8 Test Report*, EPA 600/R-92/003a, March 1992.

80. R. R. Segal, *et al.*, *Emissions Of Metals, Chromium And Nickel Species, And Organics From Municipal Wastewater Sludge Incinerators, Volume VII: Site 9 Test Report*, EPA 600/R-92/003a, March 1992.

81. *Stack Sampling For THC And Specific Organic Pollutants At MWCC Incinerators*. Prepared for the Metropolitan Waste Control Commission, Mears Park Centre, St. Paul, Minnesota, July 11, 1991, QC-91-217.

2.3 Medical Waste Incineration

Medical waste incineration involves the burning of wastes produced by hospitals, veterinary facilities, and medical research facilities. These wastes include both infectious ("red bag") medical wastes as well as non-infectious, general housekeeping wastes. The emission factors presented here represent emissions when both types of these wastes are combusted rather than just infectious wastes.

Three main types of incinerators are used: controlled air, excess air, and rotary kiln. Of the incinerators identified in this study, the majority (>95 percent) are controlled air units. A small percentage (<2 percent) are excess air. Less than 1 percent were identified as rotary kiln. The rotary kiln units tend to be larger, and typically are equipped with air pollution control devices. Approximately 2 percent of the total population identified in this study were found to be equipped with air pollution control devices.

2.3.1 Process Description[1-6]

Types of incineration described in this section include:

- Controlled air,
- Excess air, and
- Rotary kiln.

2.3.1.1 Controlled-Air Incinerators -

Controlled-air incineration is the most widely used medical waste incinerator (MWI) technology, and now dominates the market for new systems at hospitals and similar medical facilities. This technology is also known as starved-air incineration, two-stage incineration, or modular combustion. Figure 2.3-1 presents a typical schematic diagram of a controlled air unit.

Combustion of waste in controlled air incinerators occurs in two stages. In the first stage, waste is fed into the primary, or lower, combustion chamber, which is operated with less than the stoichiometric amount of air required for combustion. Combustion air enters the primary chamber from beneath the incinerator hearth (below the burning bed of waste). This air is called primary or underfire air. In the primary (starved-air) chamber, the low air-to-fuel ratio dries and facilitates volatilization of the waste, and most of the residual carbon in the ash burns. At these conditions, combustion gas temperatures are relatively low (760 to 980°C [1,400 to 1,800°F]).

In the second stage, excess air is added to the volatile gases formed in the primary chamber to complete combustion. Secondary chamber temperatures are higher than primary chamber temperatures--typically 980 to 1,095°C (1,800 to 2,000°F). Depending on the heating value and moisture content of the waste, additional heat may be needed. This can be provided by auxiliary burners located at the entrance to the secondary (upper) chamber to maintain desired temperatures.

Waste feed capacities for controlled air incinerators range from about 0.6 to 50 kg/min (75 to 6,500 lb/hr) (at an assumed fuel heating value of 19,700 kJ/kg [8,500 Btu/lb]). Waste feed and ash removal can be manual or automatic, depending on the unit size and options purchased. Throughput capacities for lower heating value wastes may be higher, since feed capacities are limited by primary

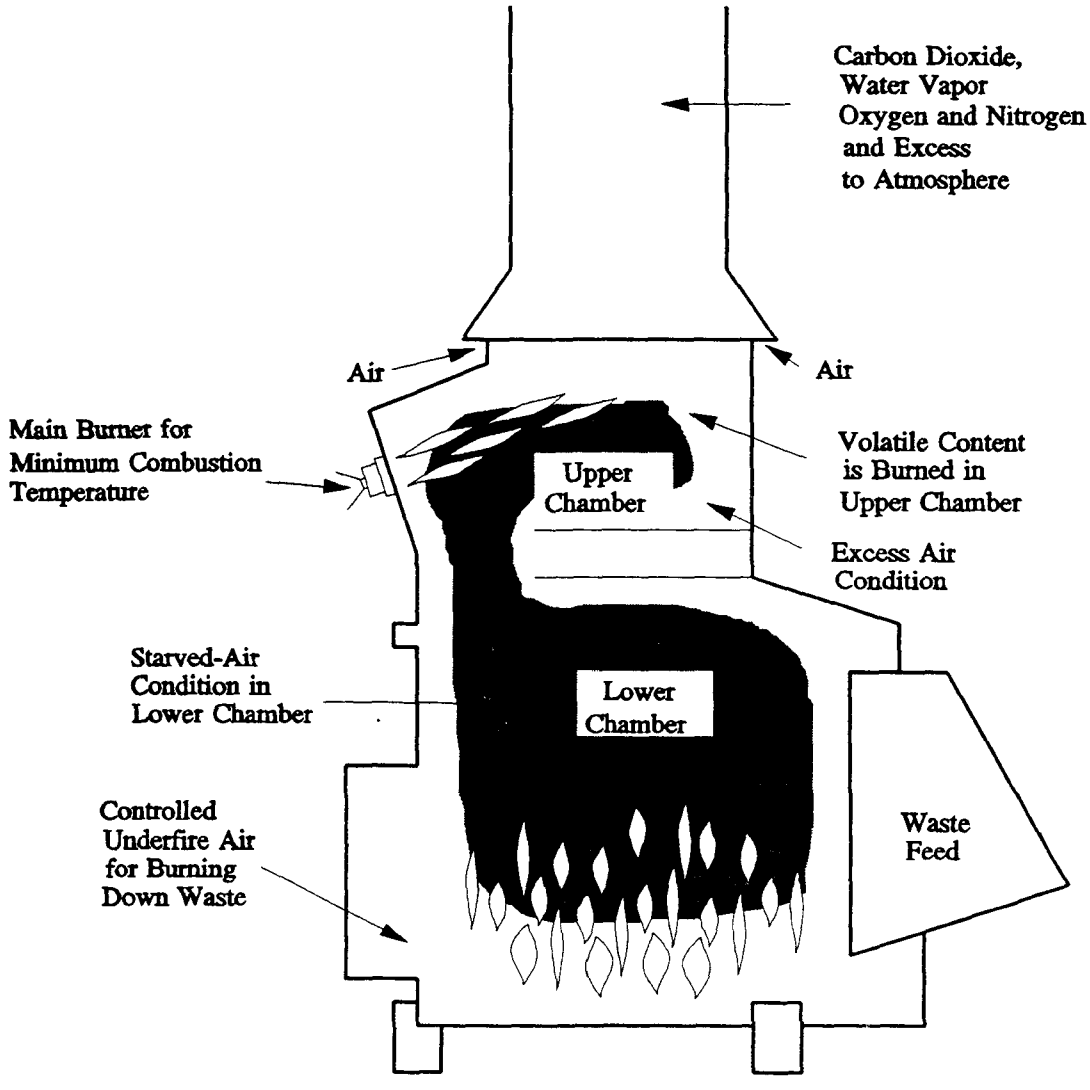

Figure 2.3-1. Controlled Air Incinerator

chamber heat release rates. Heat release rates for controlled air incinerators typically range from about 430,000 to 710,000 kJ/hr-m^3 (15,000 to 25,000 Btu/hr-ft^3).

Because of the low air addition rates in the primary chamber, and corresponding low flue gas velocities (and turbulence), the amount of solids entrained in the gases leaving the primary chamber is low. Therefore, the majority of controlled air incinerators do not have add-on gas cleaning devices.

2.3.1.2 Excess Air Incinerators -

Excess air incinerators are typically small modular units. They are also referred to as batch incinerators, multiple chamber incinerators, or "retort" incinerators. Excess air incinerators are typically a compact cube with a series of internal chambers and baffles. Although they can be operated continuously, they are usually operated in a batch mode.

Figure 2.3-2 presents a schematic for an excess air unit. Typically, waste is manually fed into the combustion chamber. The charging door is then closed, and an afterburner is ignited to bring the secondary chamber to a target temperature (typically 870 to 980°C [1600 to 1800°F]). When the target temperature is reached, the primary chamber burner ignites. The waste is dried, ignited, and combusted by heat provided by the primary chamber burner, as well as by radiant heat from the chamber walls. Moisture and volatile components in the waste are vaporized, and pass (along with combustion gases) out of the primary chamber and through a flame port which connects the primary chamber to the secondary or mixing chamber. Secondary air is added through the flame port and is mixed with the volatile components in the secondary chamber. Burners are also installed in the secondary chamber to maintain adequate temperatures for combustion of volatile gases. Gases exiting the secondary chamber are directed to the incinerator stack or to an air pollution control device. When the waste is consumed, the primary burner shuts off. Typically, the afterburner shuts off after a set time. Once the chamber cools, ash is manually removed from the primary chamber floor and a new charge of waste can be added.

Incinerators designed to burn general hospital waste operate at excess air levels of up to 300 percent. If only pathological wastes are combusted, excess air levels near 100 percent are more common. The lower excess air helps maintain higher chamber temperature when burning high-moisture waste. Waste feed capacities for excess air incinerators are usually 3.8 kg/min (500 lb/hr) or less.

2.3.1.3 Rotary Kiln Incinerators -

Rotary kiln incinerators, like the other types, are designed with a primary chamber, where the waste is heated and volatilized, and a secondary chamber, where combustion of the volatile fraction is completed. The primary chamber consists of a slightly inclined, rotating kiln in which waste materials migrate from the feed end to the ash discharge end. The waste throughput rate is controlled by adjusting the rate of kiln rotation and the angle of inclination. Combustion air enters the primary chamber through a port. An auxiliary burner is generally used to start combustion and maintain desired combustion temperatures. Both the primary and secondary chambers are usually lined with acid-resistant refractory brick, as shown in the schematic drawing, Figure 2.3-3.

Volatiles and combustion gases pass from the primary chamber to the secondary chamber. The secondary chamber operates at excess air. Combustion of the volatiles is completed in the secondary chamber. Due to the turbulent motion of the waste in the primary chamber, solids burnout rates and particulate entrainment in the flue gas are higher for rotary kiln incinerators than for other incinerator designs. As a result, rotary kiln incinerators generally have add-on gas cleaning devices.

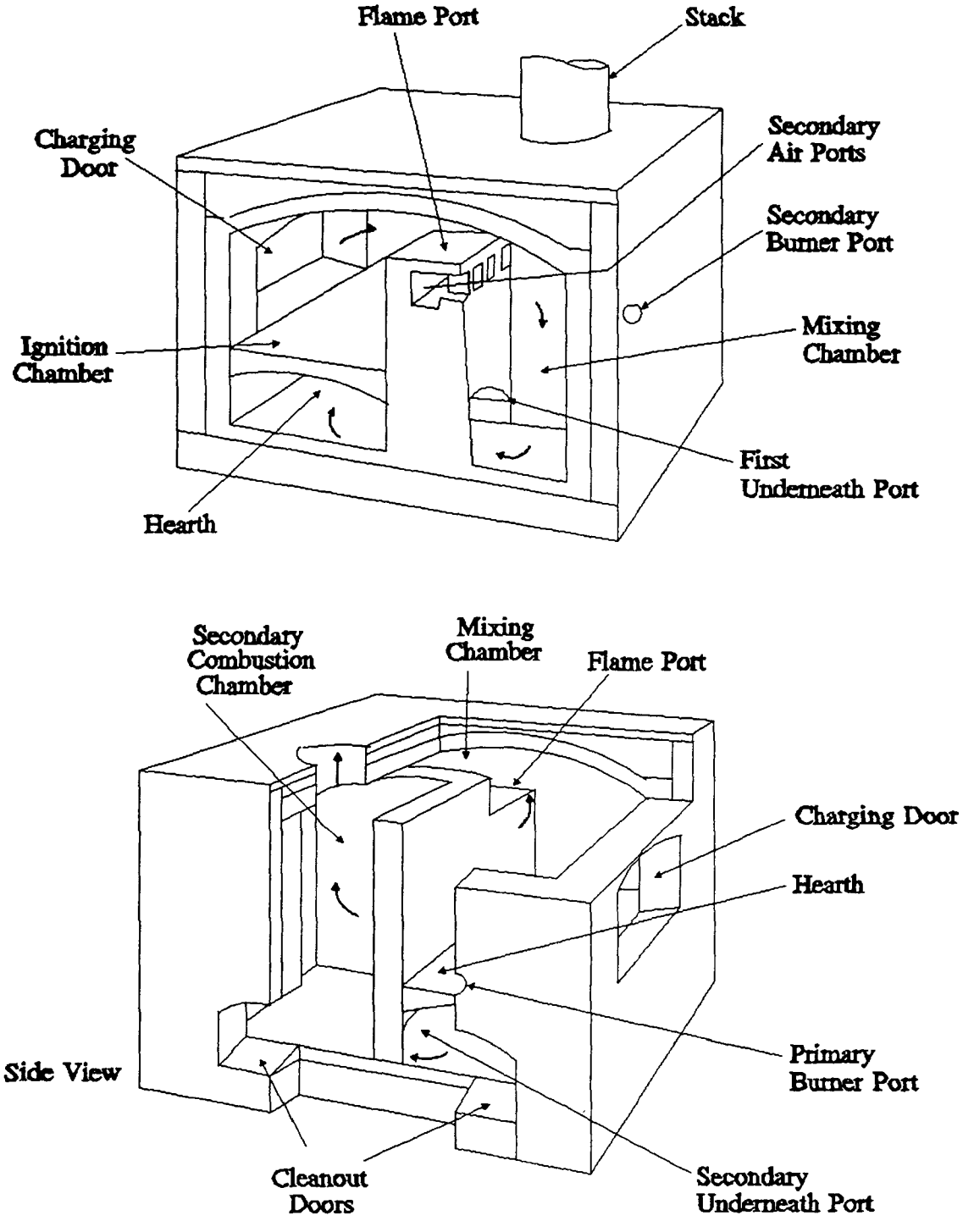

Figure 2.3-2. Excess Air Incinerator

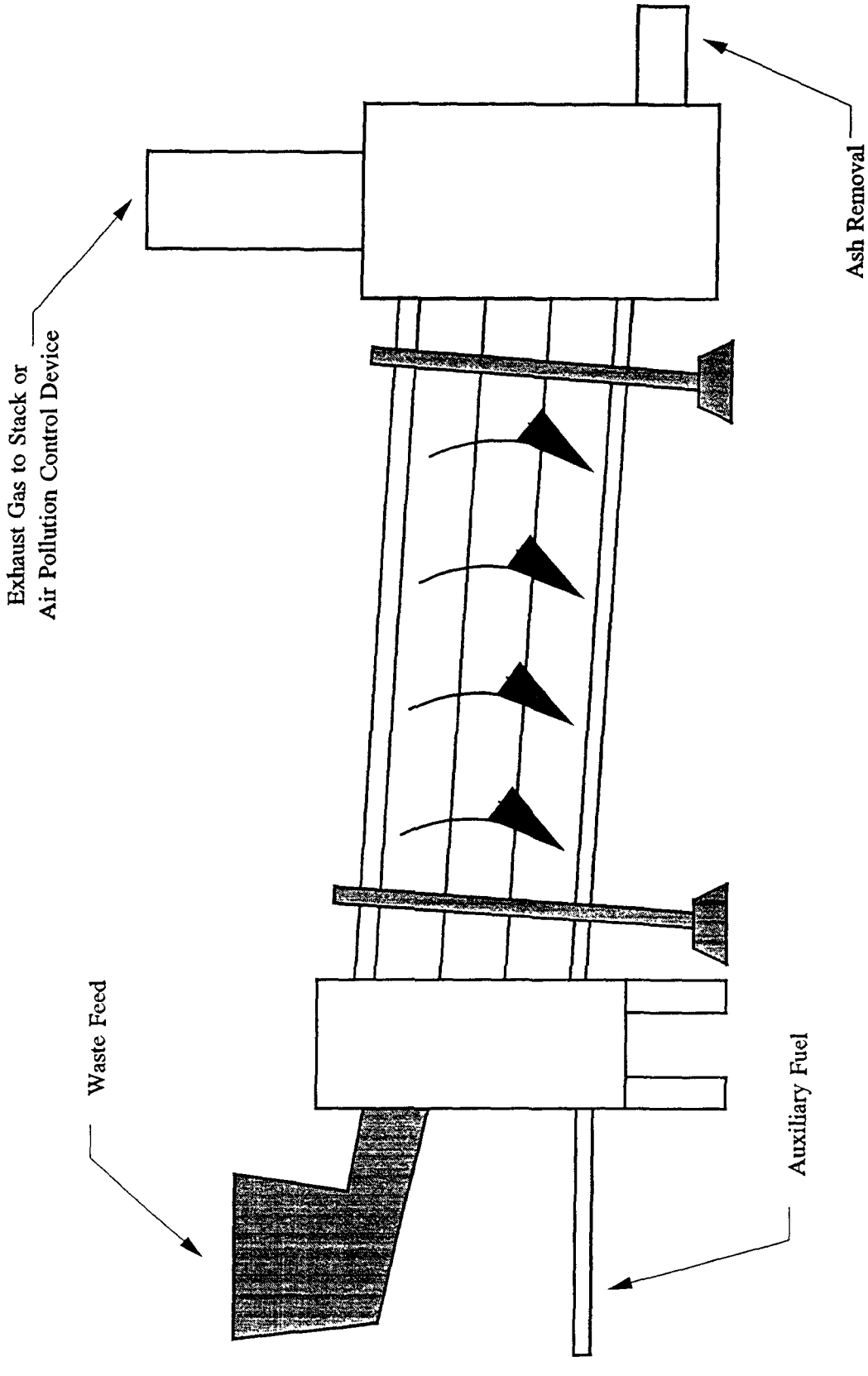

Figure 2.3-3. Rotary Kiln Incinerator

2.3.2 Emissions And Controls[2,4,7-43]

Medical waste incinerators can emit significant quantities of pollutants to the atmosphere. These pollutants include: (1) particulate matter (PM), (2) metals, (3) acid gases, (4) oxides of nitrogen (NO_x), (5) carbon monoxide (CO), (6) organics, and (7) various other materials present in medical wastes, such as pathogens, cytotoxins, and radioactive diagnostic materials.

Particulate matter is emitted as a result of incomplete combustion of organics (i. e., soot) and by the entrainment of noncombustible ash due to the turbulent movement of combustion gases. Particulate matter may exit as a solid or an aerosol, and may contain heavy metals, acids, and/or trace organics.

Uncontrolled particulate emission rates vary widely, depending on the type of incinerator, composition of the waste, and the operating practices employed. Entrainment of PM in the incinerator exhaust is primarily a function of the gas velocity within the combustion chamber containing the solid waste. Controlled air incinerators have the lowest turbulence and, consequently, the lowest PM emissions; rotary kiln incinerators have highly turbulent combustion, and thus have the highest PM emissions.

The type and amount of trace metals in the flue gas are directly related to the metals contained in the waste. Metal emissions are affected by the level of PM control and the flue gas temperature. Most metals (except mercury) exhibit fine-particle enrichment and are removed by maximizing small particle collection. Mercury, due to its high vapor pressure, does not show significant particle enrichment, and removal is not a function of small particle collection in gas streams at temperatures greater than 150°C (300°F).

Acid gas concentrations of hydrogen chloride (HCl) and sulfur dioxide (SO_2) in MWI flue gases are directly related to the chlorine and sulfur content of the waste. Most of the chlorine, which is chemically bound within the waste in the form of polyvinyl chloride (PVC) and other chlorinated compounds, will be converted to HCl. Sulfur is also chemically bound within the materials making up medical waste and is oxidized during combustion to form SO_2.

Oxides of nitrogen (NO_x) represent a mixture of mainly nitric oxide (NO) and nitrogen dioxide (NO_2). They are formed during combustion by: (1) oxidation of nitrogen chemically bound in the waste, and (2) reaction between molecular nitrogen and oxygen in the combustion air. The formation of NO_x is dependent on the quantity of fuel-bound nitrogen compounds, flame temperature, and air/fuel ratio.

Carbon monoxide is a product of incomplete combustion. Its presence can be related to insufficient oxygen, combustion (residence) time, temperature, and turbulence (fuel/air mixing) in the combustion zone.

Failure to achieve complete combustion of organic materials evolved from the waste can result in emissions of a variety of organic compounds. The products of incomplete combustion (PICs) range from low molecular weight hydrocarbon (e. g., methane or ethane) to high molecular weight compounds (e. g., polychlorinated dibenzo-p-dioxins and dibenzofurans [CDD/CDF]). In general, combustion conditions required for control of CO (i. e., adequate oxygen, temperature, residence time, and turbulence) will also minimize emissions of most organics.

Emissions of CDDs/CDFs from MWIs may occur as either a vapor or as a fine particulate. Many factors are believed to be involved in the formation of CDDs/CDFs and many theories exist

concerning the formation of these compounds. In brief, the best supported theories involve four mechanisms of formation.[2] The first theory states that trace quantities of CDDs/CDFs present in the refuse feed are carried over, unburned, to the exhaust. The second theory involves formation of CDDs/CDFs from chlorinated precursors with similar structures. Conversion of precursor material to CDDs/CDFs can potentially occur either in the combustor at relatively high temperatures or at lower temperatures such as are present in wet scrubbing systems. The third theory involves synthesis of CDDs/CDFs compounds from a variety of organics and a chlorine donor. The fourth mechanism involves catalyzed reactions on fly ash particles at low temperatures.

To date, most MWIs have operated without add-on air pollution control devices (APCDs). A small percentage (approximately 2 percent) of MWIs do use APCDs. The most frequently used control devices are wet scrubbers and fabric filters (FFs). Fabric filters provide mainly PM control. Other PM control technologies include venturi scrubbers and electrostatic precipitators (ESPs). In addition to wet scrubbing, dry sorbent injection (DSI) and spray dryer (SD) absorbers have also been used for acid gas control.

Wet scrubbers use gas-liquid absorption to transfer pollutants from a gas to a liquid stream. Scrubber design and the type of liquid solution used largely determine contaminant removal efficiencies. With plain water, removal efficiencies for acid gases could be as high as 70 percent for HCl and 30 percent for SO_2. Addition of an alkaline reagent to the scrubber liquor for acid neutralization has been shown to result in removal efficiencies of 93 to 96 percent.

Wet scrubbers are generally classified according to the energy required to overcome the pressure drop through the system. Low-energy scrubbers (spray towers) are primarily used for acid gas control only, and are usually circular in cross section. The liquid is sprayed down the tower through the rising gas. Acid gases are absorbed/neutralized by the scrubbing liquid. Low-energy scrubbers mainly remove particles larger than 5-10 micrometers (μm) in diameter.

Medium-energy scrubbers can be used for particulate matter and/or acid gas control. Medium energy devices rely mostly on impingement to facilitate removal of PM. This can be accomplished through a variety of configurations, such as packed columns, baffle plates, and liquid impingement scrubbers.

Venturi scrubbers are high-energy systems that are used primarily for PM control. A typical venturi scrubber consists of a converging and a diverging section connected by a throat section. A liquid (usually water) is introduced into the gas stream upstream of the throat. The flue gas impinges on the liquid stream in the converging section. As the gas passes through the throat, the shearing action atomizes the liquid into fine droplets. The gas then decelerates through the diverging section, resulting in further contact between particles and liquid droplets. The droplets are then removed from the gas stream by a cyclone, demister, or swirl vanes.

A fabric filtration system (baghouse) consists of a number of filtering elements (bags) along with a bag cleaning system contained in a main shell structure with dust hoppers. Particulate-laden gas passes through the bags so that the particles are retained on the upstream side of the fabric, thus cleaning the gas. A FF is typically divided into several compartments or sections. In a FF, both the collection efficiency and the pressure drop across the bag surface increase as the dust layer on the bag builds up. Since the system cannot continue to operate with an increasing pressure drop, the bags are cleaned periodically. The cleaning processes include reverse flow with bag collapse, pulse jet cleaning, and mechanical shaking. When reverse flow and mechanical shaking are used, the particulate matter is collected on the inside of the bag; particulate matter is collected on the outside of the bag in pulse jet systems. Generally, reverse flow FFs operate with lower gas flow per unit area

of bag surface (air-to-cloth ratio) than pulse jet systems and, thus, are larger and more costly for a given gas flow-rate or application. Fabric filters can achieve very high (>99.9 percent) PM removal efficiencies. These systems are also very effective in controlling fine particulate matter, which results in good control of metals and organics entrained on fine particulate.

Particulate collection in an ESP occurs in 3 steps: (1) suspended particles are given an electrical charge; (2) the charged particles migrate to a collecting electrode of opposite polarity; and (3) the collected PM is dislodged from the collecting electrodes and collected in hoppers for disposal.

Charging of the particles is usually caused by ions produced in a high voltage corona. The electric fields and the corona necessary for particle charging are provided by converting alternating current to direct current using high voltage transformers and rectifiers. Removal of the collected particulate matter is accomplished mechanically by rapping or vibrating the collecting electrode plates. ESPs have been used in many applications due to their high reliability and efficiency in controlling total PM emissions. Except for very large and carefully designed ESPs, however, they are less efficient than FFs at control of fine particulates and metals.

Dry sorbent injection (DSI) is another method for controlling acid gases. In the DSI process, a dry alkaline material is injected into the flue gas into a dry venturi within the ducting or into the duct ahead of a particulate control device. The alkaline material reacts with and neutralizes acids in the flue gas. Fabric filters are employed downstream of DSI to: (1) control the PM generated by the incinerator, (2) capture the DSI reaction products and unreacted sorbent, and (3) increase sorbent/acid gas contact time, thus enhancing acid gas removal efficiency and sorbent utilization. Fabric filters are commonly used with DSI because they provide high sorbent/acid gas contact. Fabric filters are less sensitive to PM loading changes or combustion upsets than other PM control devices since they operate with nearly constant efficiency. A potential disadvantage of ESPs used in conjunction with DSI is that the sorbent increases the electrical resistivity of the PM being collected. This phenomenon makes the PM more difficult to charge and, therefore, to collect. High resistivity can be compensated for by flue gas conditioning or by increasing the plate area and size of the ESP.

The major factors affecting DSI performance are flue gas temperature, acid gas dew point (temperature at which the acid gases condense), and sorbent-to-acid gas ratio. DSI performance improves as the difference between flue gas and acid dew point temperatures decreases and the sorbent-to-acid gas ratio increases. Acid gas removal efficiency with DSI also depends on sorbent type and the extent of sorbent mixing with the flue gas. Sorbents that have been successfully applied include hydrated lime ($Ca[OH]_2$), sodium hydroxide (NaOH), and sodium bicarbonate ($NaHCO_3$). For hydrated lime, DSI can achieve 80 to 95 percent of HCl removal and 40 to 70 percent removal of SO_2 under proper operating conditions.

The primary advantage of DSI compared to wet scrubbers is the relative simplicity of the sorbent preparation, handling, and injection systems as well as the easier handling and disposal of dry solid process wastes. The primary disadvantages are its lower sorbent utilization rate and correspondingly higher sorbent and waste disposal rates.

In the spray drying process, lime slurry is injected into the SD through either a rotary atomizer or dual-fluid nozzles. The water in the slurry evaporates to cool the flue gas, and the lime reacts with acid gases to form calcium salts that can be removed by a PM control device. The SD is designed to provide sufficient contact and residence time to produce a dry product before leaving the SD adsorber vessel. The residence time in the adsorber vessel is typically 10 to 15 seconds. The particulates leaving the SD (fly ash, calcium salts, and unreacted hydrated lime) are collected by an FF or ESP.

Emission factors and emission factor ratings for controlled air incinerators are presented in Tables 2.3-1, 2.3-2, 2.3-3, 2.3-4, 2.3-5, 2.3-6, 2.3-7, 2.3-8, 2.3-9, 2.3-10, 2.3-11, 2.3-12, 2.3-13, 2.13-14, and 2.3-15. For emissions controlled with wet scrubbers, emission factors are presented separately for low-, medium-, and high-energy wet scrubbers. Particle size distribution data for controlled air incinerators are presented in Table 2.3-15 for uncontrolled emissions and controlled emissions following a medium-energy wet scrubber/FF and a low-energy wet scrubber. Emission factors and emission factor ratings for rotary kiln incinerators are presented in Tables 2.3-16, 2.3-17, and 2.3-18. Emissions data are not available for pathogens because there is not an accepted methodology for measurement of these emissions. Refer to References 8, 9, 11, 12, and 19 for more information.

Table 2.3-1 (English And Metric Units). EMISSION FACTORS FOR NITROGEN OXIDES (NO_x), CARBON MONOXIDE (CO), AND SULFUR DIOXIDE (SO_2) FOR CONTROLLED AIR MEDICAL WASTE INCINERATORS[a]

Rating (A-E) Follows Each Factor

Control Level[b]	NO_x[c]			CO[c]			SO_2[c]		
	lb/ton	kg/Mg	EMISSION FACTOR RATING	lb/ton	kg/Mg	EMISSION FACTOR RATING	lb/ton	kg/Mg	EMISSION FACTOR RATING
Uncontrolled	3.56 E+00	1.78 E+00	A	2.95 E+00	1.48 E+00	A	2.17 E+00	1.09 E+00	B
Low Energy Scrubber/FF									
Medium Energy Scrubber/FF							3.75 E-01	1.88 E-01	E
FF							8.45 E-01	4.22 E-01	E
Low Energy Scrubber							2.09 E+00	1.04 E+00	E
High Energy Scrubber							2.57 E-02	1.29 E-02	E
DSI/FF							3.83 E-01	1.92 E-01	E
DSI/Carbon Injection/FF							7.14 E-01	3.57 E-01	E
DSI/FF/Scrubber							1.51 E-02	7.57 E-03	E
DSI/ESP									

[a] References 7-43. Source Classification Codes 5-01-005-05, 5-02-005-05. Blanks indicate no data.
[b] FF = Fabric Filter
DSI = Dry Sorbent Injection
ESP = Electrostatic Precipitator
[c] NO_x and CO emission factors for uncontrolled facilities are applicable for all add-on control devices shown.

Table 2.3-2 (English And Metric Units). EMISSION FACTORS FOR TOTAL PARTICULATE MATTER, LEAD, AND TOTAL ORGANIC COMPOUNDS (TOC) FOR CONTROLLED AIR MEDICAL WASTE INCINERATORS[a]

Rating (A-E) Follows Each Factor

	Total Particulate Matter			Lead[c]			TOC		
Control Level[b]	lb/ton	kg/Mg	EMISSION FACTOR RATING	lb/ton	kg/Mg	EMISSION FACTOR RATING	lb/ton	kg/Mg	EMISSION FACTOR RATING
Uncontrolled	4.67 E+00	2.33 E+00	B	7.28 E-02	3.64 E-02	B	2.99 E-01	1.50 E-01	B
Low Energy Scrubber/FF	9.09 E-01	4.55 E-01	E						
Medium Energy Scrubber/FF	1.61 E-01	8.03 E-02	E	1.60 E-03	7.99 E-04	E			
FF	1.75 E-01	8.76 E-02	E	9.92 E-05	4.96 E-05	E	6.86 E-02	3.43 E-01	E
Low Energy Scrubber	2.90 E+00	1.45 E+00	E	7.94 E-02	3.97 E-02	E	1.40 E-01	7.01 E-02	E
High Energy Scrubber	1.48 E+00	7.41 E-01	E	6.98 E-02	3.49 E-02	E	1.40 E-01	7.01 E-02	E
DSI/FF	3.37 E-01	1.69 E-01	E	6.25 E-05	3.12 E+01	E	4.71 E-02	2.35 E-02	E
DSI/Carbon Injection/FF	7.23 E-02	3.61 E-02	E	9.27 E-05	4.64 E-05	E			
DSI/FF/Scrubber	2.68 E+00	1.34 E+00	E	5.17 E-05	2.58 E-05	E			
DSI/ESP	7.34 E-01	3.67 E-01	E	4.70 E-03	2.35 E-03	E			

[a] References 7-43. Source Classification Codes 5-01-005-05, 5-02-005-05. Blanks indicate no data.
[b] FF = Fabric Filter
DSI = Dry Sorbent Injection
ESP = Electrostatic Precipitator
[c] Hazardous air pollutants listed in the *Clean Air Act.*

Table 2.3-3 (English And Metric Units). EMISSION FACTORS FOR HYDROGEN CHLORIDE (HCl) AND POLYCHLORINATED BIPHENYLS (PCBs) FOR CONTROLLED AIR MEDICAL WASTE INCINERATORS[a]

Rating (A-E) Follows Each Factor

Control Level[b]	HCl[c]			Total PCBs[c]		
	lb/ton	kg/Mg	EMISSION FACTOR RATING	lb/ton	kg/Mg	EMISSION FACTOR RATING
Uncontrolled	3.35 E+01	1.68 E+01	C	4.65 E-05	2.33 E-05	E
Low Energy Scrubber/FF	1.90 E+00	9.48 E-01	E			
Medium Energy Scrubber/FF	2.82 E+00	1.41 E+00	E			
FF	5.65 E+00	2.82 E+00	E			
Low Energy Scrubber	1.00 E+00	5.01 E-01	E			
High Energy Scrubber	1.39 E-01	6.97 E-02	E			
DSI/FF	1.27 E+01	6.37 E+00	D			
DSI/Carbon Injection/FF	9.01 E-01	4.50 E-01	E			
DSI/FF/Scrubber	9.43 E-02	4.71 E-02	E			
DSI/ESP	4.98 E-01	2.49 E-01	E			

[a] References 7-43. Source Classification Codes 5-01-005-05, 5-02-005-05. Blanks indicate no data.
[b] FF = Fabric Filter
DSI = Dry Sorbent Injection
ESP = Electrostatic Precipitator
[c] Hazardous air pollutants listed in the *Clean Air Act*.

Table 2.3-4 (English And Metric Units). EMISSION FACTORS FOR ALUMINUM, ANTIMONY, AND ARSENIC CONTROLLED AIR MEDICAL WASTE INCINERATORS[a]

Rating (A-E) Follows Each Factor

Control Level[b]	Aluminum			Antimony[c]			Arsenic[c]		
	lb/ton	kg/Mg	EMISSION FACTOR RATING	lb/ton	kg/Mg	EMISSION FACTOR RATING	lb/ton	kg/Mg	EMISSION FACTOR RATING
Uncontrolled	1.05 E-02	5.24 E-03	E	1.28 E-02	6.39 E-03	D	2.42 E-04	1.21 E-04	B
Low Energy Scrubber/FF									
Medium Energy Scrubber/FF				3.09 E-04	1.55 E-04	E	3.27 E-05	1.53 E-02	E
FF							3.95 E-08	1.97 E-08	E
Low Energy Scrubber							1.42 E-04	7.12 E-05	E
High Energy Scrubber				4.08 E-04	2.04 E-04	E	3.27 E-05	1.64 E-05	E
DSI/FF	3.03 E-03	1.51 E-03	E	2.10 E-04	1.05 E-04	E	1.19 E-05	5.93 E-06	E
DSI/Carbon Injection/FF	2.99 E-03	1.50 E-03	E	1.51 E-04	7.53 E-05	E	1.46 E-05	7.32 E-06	E
DSI/FF/Scrubber									
DSI/ESP							5.01 E-05	2.51 E-05	E

[a] References 7-43. Source Classification Codes 5-01-005-05, 5-02-005-05. Blanks indicate no data.
[b] FF = Fabric Filter
DSI = Dry Sorbent Injection
ESP = Electrostatic Precipitator
[c] Hazardous air pollutants listed in the *Clean Air Act*.

Table 2.3-5 (English And Metric Units). EMISSION FACTORS FOR BARIUM, BERYLLIUM, AND CADMIUM FOR CONTROLLED AIR MEDICAL WASTE INCINERATORS[a]

Rating (A-E) Follows Each Factor

Control Level[b]	Barium			Beryllium[c]			Cadmium[c]		
	lb/ton	kg/Mg	EMISSION FACTOR RATING	lb/ton	kg/Mg	EMISSION FACTOR RATING	lb/ton	kg/Mg	EMISSION FACTOR RATING
Uncontrolled	3.24 E-03	1.62 E-03	D	6.25 E-06	3.12 E-06	D	5.48 E-03	2.74 E-03	B
Low Energy Scrubber/FF									
Medium Energy Scrubber/FF	2.07 E-04	1.03 E-04	E				1.78 E-04	8.89 E-05	E
FF									
Low Energy Scrubber							6.97 E-03	3.49 E-03	E
High Energy Scrubber							7.43 E-02	3.72 E-02	E
DSI/FF	7.39 E-05	3.70 E-05	E				2.46 E-05	1.23 E-05	E
DSI/Carbon Injection/FF	7.39 E-05	3.69 E-05	E	3.84 E-06	1.92 E-06	E	9.99 E-05	4.99 E-05	E
DSI/FF/Scrubber							1.30 E-05	6.48 E-06	E
DSI/ESP							5.93 E-04	2.97 E-04	E

[a] References 7-43. Source Classification Codes 5-01-005-05, 5-02-005-05. Blanks indicate no data.
[b] FF = Fabric Filter
DSI = Dry Sorbent Injection
ESP = Electrostatic Precipitator
[c] Hazardous air pollutants listed in the *Clean Air Act*.

Table 2.3-6 (English And English Units). EMISSION FACTORS FOR CHROMIUM, COPPER, AND IRON FOR CONTROLLED AIR MEDICAL WASTE INCINERATORS[a]

Rating (A-E) Follows Each Factor

	Chromium[c]			Copper			Iron		
Control Level[b]	lb/ton	kg/Mg	EMISSION FACTOR RATING	lb/ton	kg/Mg	EMISSION FACTOR RATING	lb/ton	kg/Mg	EMISSION FACTOR RATING
Uncontrolled	7.75 E-04	3.88 E-04	B	1.25 E-02	6.24 E-03	E	1.44 E-02	7.22 E-03	C
Low Energy Scrubber/FF									
Medium Energy Scrubber/FF	2.58 E-04	1.29 E-04	E						
FF	2.15 E-06	1.07 E-06	E						
Low Energy Scrubber	4.13 E-04	2.07 E-04	E				9.47 E-03	4.73E -03	E
High Energy Scrubber	1.03 E-03	5.15 E-04	E						
DSI/FF	3.06 E-04	1.53 E-04	E	1.25 E-03	6.25 E-04	E			
DSI/Carbon Injection/FF	1.92 E-04	9.58 E-05	E	2.75 E-04	1.37 E-04	E			
DSI/FF/Scrubber	3.96 E-05	1.98 E-05	E						
DSI/ESP	6.58 E-04	3.29 E-04	E						

[a] References 7-43. Source Classification Codes 5-01-005-05, 5-02-005-05. Blanks indicate no data.
[b] FF = Fabric Filter
DSI = Dry Sorbent Injection
ESP = Electrostatic Precipitator
[c] Hazardous air pollutants listed in the *Clean Air Act*.

Table 2.3-7 (English and Metric Units). EMISSION FACTORS FOR MANGANESE, MERCURY, AND NICKEL FOR CONTROLLED AIR MEDICAL WASTE INCINERATORS[a]

Rating (A-E) Follows Each Factor

Control Level[b]	Manganese[c]			Mercury[c]			Nickel[c]		
	lb/ton	kg/Mg	EMISSION FACTOR RATING	lb/ton	kg/Mg	EMISSION FACTOR RATING	lb/ton	kg/Mg	EMISSION FACTOR RATING
Uncontrolled	5.67 E-04	2.84 E-04	C	1.07 E-01	5.37 E-02	C	5.90 E-04	2.95 E-04	B
Low Energy Scrubber/FF									
Medium Energy Scrubber/FF				3.07 E-02	1.53 E-02	E	5.30 E-04	2.65 E-04	E
FF									
Low Energy Scrubber	4.66 E-04	2.33 E-04	E	1.55 E-02	7.75 E-03	E	3.28 E-04	1.64 E-02	E
High Energy Scrubber	6.12 E-04	3.06 E-04	E	1.73 E-02	8.65 E-03	E	2.54 E-03	1.27 E-03	E
DSI/FF				1.11 E-01	5.55 E-02	E	4.54 E-04	2.27 E-04	E
DSI/Carbon Injection/FF				9.74 E-03	4.87 E-03	E	2.84 E-04	1.42 E-04	E
DSI/FF/Scrubber				3.56 E-04	1.78 E-04	E			
DSI/ESP				1.81 E-02	9.05 E-03	E	4.84 E-04	2.42 E-04	E

[a] References 7-43. Source Classification Codes 5-01-005-05, 5-02-005-05. Blanks indicate no data.
[b] FF = Fabric Filter
DSI = Dry Sorbent Injection
ESP = Electrostatic Precipitator
[c] Hazardous air pollutants listed in the *Clean Air Act*.

Table 2.3-8 (English And Metric Units). EMISSION FACTORS FOR SILVER AND THALLIUM FOR CONTROLLED AIR MEDICAL WASTE INCINERATORS[a]

Rating (A-E) Follows Each Factor

Control Level[b]	Silver			Thallium		
	lb/ton	kg/Mg	EMISSION FACTOR RATING	lb/ton	kg/Mg	EMISSION FACTOR RATING
Uncontrolled	2.26 E-04	1.13 E-04	D	1.10 E-03	5.51 E-04	D
Low Energy Scrubber/FF						
Medium Energy Scrubber/FF	1.71 E-04	8.57 E-05	E			
FF						
Low Energy Scrubber						
High Energy Scrubber	4.33 E-04	2.17 E-04	E			
DSI/FF	6.65 E-05	3.32 E-05	E			
DSI/Carbon Injection/FF	7.19 E-05	3.59 E-05	E			
DSI/FF/Scrubber						
DSI/ESP						

[a] References 7-43. Source Classification Codes 5-01-005-05, 5-02-005-05. Blanks indicate no data.
[b] FF = Fabric Filter
DSI = Dry Sorbent Injection
ESP = Electrostatic Precipitator

Table 2.3-9 (English And Metric Units). EMISSION FACTORS FOR SULFUR TRIOXIDE (SO_3) AND HYDROGEN BROMIDE (HBr) FOR CONTROLLED AIR MEDICAL WASTE INCINERATORS[a]

Rating (A-E) Follows Each Factor

Control Level[b]	SO_3			HBr		
	lb/ton	kg/Mg	EMISSION FACTOR RATING	lb/ton	kg/Mg	EMISSION FACTOR RATING
Uncontrolled				4.33 E-02	2.16 E-02	D
Low Energy Scrubber/FF						
Medium Energy Scrubber/FF				5.24 E-02	2.62 E-02	E
FF						
Low Energy Scrubber						
High Energy Scrubber						
DSI/FF						
DSI/Carbon Injection/FF				4.42 E-03	2.21 E-03	E
DSI/FF/Scrubber	9.07 E-03	4.53 E-03	E			
DSI/ESP						

[a] References 7-43. Source Classification Codes 5-01-005-05, 5-02-005-05. Blanks indicate no data.
[b] FF = Fabric Filter
DSI = Dry Sorbent Injection
ESP = Electrostatic Precipitator

Table 2.3-10 (English And Metric Units). EMISSION FACTORS FOR HYDROGEN FLUORIDE AND CHLORINE FOR CONTROLLED AIR MEDICAL WASTE INCINERATORS[a]

Rating (A-E) Follows Each Factor

Control Level[b]	Hydrogen Fluoride[c]			Chlorine[c]		
	lb/ton	kg/Mg	EMISSION FACTOR RATING	lb/ton	kg/Mg	EMISSION FACTOR RATING
Uncontrolled	1.49 E-01	7.43 E-02	D	1.05 E-01	5.23 E-02	E
Low Energy Scrubber/FF						
Medium Energy Scrubber/FF						
FF						
Low Energy Scrubber						
High Energy Scrubber						
DSI/FF						
DSI/Carbon Injection/FF	1.33 E-02	6.66 E-03	E			
DSI/FF/Scrubber						
DSI/ESP						

[a] References 7-43. Source Classification Codes 5-01-005-05, 5-02-005-05. Blanks indicate no data.
[b] FF = Fabric Filter
DSI = Dry Sorbent Injection
ESP = Electrostatic Precipitator
[c] Hazardous air pollutants listed in the *Clean Air Act*.

Table 2.3-11 (English And Metric Units). CHLORINATED DIBENZO-P-DIOXIN EMISSION FACTORS FOR CONTROLLED AIR MEDICAL WASTE INCINERATORS[a]

Rating (A-E) Follows Each Factor

	Uncontrolled			Fabric Filter			Wet Scrubber			DSI/FF[c]		
Congener[b]	lb/ton	kg/Mg	EMISSION FACTOR RATING	lb/ton	kg/Mg	EMISSION FACTOR RATING	lb/ton	kg/Mg	EMISSION FACTOR RATING	lb/ton	kg/Mg	EMISSION FACTOR RATING
TCDD												
2,3,7,8-	5.47 E-08	2.73 E-08	E	6.72 E-09	3.36 E-09	E	1.29 E-10	6.45 E-11	E	5.61 E-10	2.81 E-10	E
Total	1.00 E-06	5.01 E-07	B	1.23 E-07	6.17 E-08	E	2.67 E-08	1.34 E-08	E	6.50 E-09	3.25 E-09	E
PeCDD												
1,2,3,7,8-							6.08 E-10	3.04 E-10	E			
Total							5.53 E-10	2.77 E-10	E			
HxCDD												
1,2,3,6,7,8-	3.78 E-10	1.89 E-10	E				1.84 E-09	9.05 E-10	E			
1,2,3,7,8,9-	1.21 E-09	6.07 E-10	E				2.28 E-09	1.14 E-09	E			
1,2,3,4,7,8-							9.22 E-10	4.61 E-10	E			
Total							5.77 E-10	2.89 E-10	E			
HpCDD												
1,2,3,4,6, 7,8-	5.23 E-09	2.62 E-09	E				6.94 E-09	3.47 E-09	E			
Total							1.98 E-09	9.91 E-10	E			
OCDD - total	2.21 E-08	1.11 E-08	E									
Total CDD	2.13 E-05	1.07 E-05	B	2.68 E-06	1.34 E-06	E	1.84 E-06	9.18 E-07	E	3.44 E-07	1.72 E-07	E

[a] References 7-43. Source Classification Codes 5-01-005-05, 5-02-005-05. Blanks indicate no data.
[b] Hazardous air pollutants listed in *Clean Air Act*.
[c] FF = Fabric Filter
DSI = Dry Sorbent Injection

Table 2.3-12 (English And Metric Units). CHLORINATED DIBENZO-P-DIOXIN EMISSION FACTORS FOR CONTROLLED AIR MEDICAL WASTE INCINERATORS[a]

Rating (A-E) Follows Each Factor

Congener[b]	DSI/Carbon Injection/FF[c]			DSI/ESP[d]		
	lb/ton	kg/Mg	EMISSION FACTOR RATING	lb/ton	kg/Mg	EMISSION FACTOR RATING
TCDD						
2,3,7,8-	8.23 E-10	4.11 E-10	E	1.73 E-10	8.65 E-11	E
Total						
PeCDD						
1,2,3,7,8-						
Total						
HxCDD						
1,2,3,6,7,8-						
1,2,3,7,8,9-						
1,2,3,4,7,8-						
Total						
HpCDD						
2,3,4,6,7,8-						
1,2,3,4,6,7,8-						
Total						
OCDD - Total						
Total CDD	5.38 E-08	2.69 E-08	E			

[a] References 7-43. Source Classification Codes 5-01-005-05, 5-02-005-05. Blanks indicate no data.
[b] Hazardous air pollutants listed in the *Clean Air Act*.
[c] FF = Fabric Filter
DSI = Dry Sorbent Injection
[d] ESP = Electrostatic Precipitator

Table 2.3-13 (English And Metric Units). CHLORINATED DIBENZOFURAN EMISSION FACTORS FOR CONTROLLED AIR MEDICAL WASTE INCINERATORS[a]

Rating (A-E) Follows Each Factor

	Uncontrolled			Fabric Filter			Wet Scrubber			DSI/FF[c]		
Congener[b]	lb/ton	kg/Mg	EMISSION FACTOR RATING	lb/ton	kg/Mg	EMISSION FACTOR RATING	lb/ton	kg/Mg	EMISSION FACTOR RATING	lb/ton	kg/Mg	EMISSION FACTOR RATING
TCDF												
2,3,7,8-	2.40 E-07	1.20 E-07	E	3.85 E-08	1.97 E-08	E	1.26 E-08	6.30 E-09	E	4.93 E-09	2.47 E-09	E
Total	7.21 E-06	3.61 E-06	B	1.28 E-06	6.39 E-07	E	4.45 E-07	2.22 E-07	E	1.39 E-07	6.96 E-08	E
PeCDF												
1,2,3,7,8-	7.56 E-10	3.78 E-10	E				1.04 E-09	5.22 E-10	E			
2,3,4,7,8-	2.07 E-09	1.04 E-09	E				3.07 E-09	1.53 E-09	E			
Total							6.18 E-09	3.09 E-09	E			
HxCDF												
1,2,3,4,7,8-	7.55 E-09	3.77 E-09	E				8.96 E-09	4.48 E-09	E			
1,2,3,6,7,8-	2.53 E-09	1.26 E-09	E				3.53 E-09	1.76 E-09	E			
2,3,4,6,7,8-	7.18 E-09	3.59 E-09	E				9.59 E-09	4.80 E-09	E			
1,2,3,7,8,9-							3.51 E-10	1.76 E-10	E			
Total							5.10 E-09	2.55 E-09	E			
HpCDF												
1,2,3,4,6,7,8-	1.76 E-08	8.78 E-09	E				1.79 E-08	8.97 E-09	E			
1,2,3,4,7,8,9-	2.72 E-09	1.36 E-09	E				3.50 E-09	1.75 E-09	E			
Total							1.91 E-09	9.56 E-10	E			
OCDF - Total	7.42 E-08	3.71 E-08	E				4.91 E-10	2.45 E-10	E			
Total CDF	7.15 E-05	3.58 E-05	B	8.50 E-06	4.25 E-06	E	4.92 E-06	2.46 E-06	E	1.47 E-06	7.37 E-07	E

[a] References 7-43. Source Classification Codes 5-01-005-05, 5-02-005-05. Blanks indicate no data.
[b] Hazardous air pollutants listed in the *Clean Air Act*.
[c] FF = Fabric Filter
DSI = Dry Sorbent Injection

Table 2.3-14 (English And Metric Units). CHLORINATED DIBENZOFURANS EMISSION FACTORS FOR CONTROLLED AIR MEDICAL WASTE INCINERATORS[a]

Rating (A-E) Follows Each Factor

Congener[b]	DSI/Carbon Injection/FF[c]			DSI/ESP[d]		
	lb/ton	kg/Mg	EMISSION FACTOR RATING	lb/ton	kg/Mg	EMISSION FACTOR RATING
TCDF						
2,3,7,8-	7.31 E-10	3.65 E-10	E	1.73 E-09	8.66 E-10	E
Total	1.01 E-08	5.07 E-09	E			
PeCDF						
1,2,3,7,8-						
2,3,4,7,8-						
Total						
HxCDF						
1,2,3,4,7,8-						
1,2,3,6,7,8-						
2,3,4,6,7,8-						
1,2,3,7,8,9-						
Total						
HpCDF						
1,2,3,4,6,7,8-						
1,2,3,4,7,8,9-						
Total						
OCDF - Total						
Total CDF	9.47 E-08	4.74 E-08	E			

[a] References 7-43. Source Classification Codes 5-01-005-05, 5-02-005-05. Blanks indicate no data.
[b] Hazardous air pollutants listed in the *Clean Air Act*.
[c] FF = Fabric Filter
DSI = Dry Sorbent Injection
[d] ESP = Electrostatic Precipitator

Table 2.3-15. PARTICLE SIZE DISTRIBUTION FOR CONTROLLED AIR MEDICAL WASTE INCINERATOR PARTICULATE MATTER EMISSIONS[a]

EMISSION FACTOR RATING: E

Cut Diameter (μm)	Uncontrolled Cumulative Mass % Less Than Stated Size	Scrubber Cumulative Mass % Less Than Stated Size
0.625	31.1	0.1
1.0	35.4	0.2
2.5	43.3	2.7
5.0	52.0	28.1
10.0	65.0	71.9

[a] References 7-43. Source Classification Codes 5-01-005-05, 5-02-005-05.

Table 2.3-16 (English And Metric Units). ROTARY KILN MEDICAL WASTE INCINERATOR EMISSION FACTORS FOR CRITERIA POLLUTANTS AND ACID GASES[a]

EMISSION FACTOR RATING: E

Pollutant	Uncontrolled		SD/Fabric Filter[b]		SD/Carbon Injection/FF[c]		High Energy Scrubber	
	lb/ton	kg/Mg	lb/ton	kg/Mg	lb/ton	kg/Mg	lb/ton	kg/Mg
Carbon monoxide	3.82 E-01	1.91 E-01	3.89 E-02	1.94 E-02	4.99 E-02	2.50 E-02	5.99 E-02	3.00 E-02
Nitrogen oxides	4.63 E+00	2.31 E+00	5.25 E+00	2.63 E+00	4.91 E+00	2.45 E+00	4.08 E+00	2.04 E+00
Sulfur dioxide	1.09 E+00	5.43 E-01	6.47 E-01	3.24 E-01	3.00 E-01	1.50 E-01		
PM	3.45 E+01	1.73 E+01	3.09 E-01	1.54 E-01	7.56 E-02	3.78 E-02	8.53 E-01	4.27 E-01
TOC	6.66 E-02	3.33 E-02	4.11 E-02	2.05 E-02	5.05 E-02	2.53 E-02	2.17 E-02	1.08 E-02
HCl[d]	4.42 E+01	2.21 E+01	2.68 E-01	1.34 E-01	3.57 E-01	1.79 E-01	2.94 E+01	1.47 E+01
HF[d]	9.31 E-02	4.65 E-02	2.99 E-02	1.50 E-02				
HBr	1.05 E+00	5.25 E-01	6.01 E-02	3.00 E-02	1.90 E-02	9.48 E-03		
H_2SO_4							2.98 E+00	1.49 E+00

[a] References 7-43. Source Classification Codes 5-01-005-05, 5-02-005-05. Blanks indicate no data.
[b] SD = Spray Dryer
[c] FF = Fabric Filter
[d] Hazardous air pollutant listed in the *Clean Air Act*.

Table 2.3-17 (English And Metric Units). ROTARY KILN MEDICAL WASTE INCINERATOR EMISSION FACTORS FOR METALS[a]

EMISSION FACTOR RATING: E

Pollutant	Uncontrolled		SD/Fabric Filter[b]		SD/Carbon Injection/FF[c]	
	lb/ton	kg/Mg	lb/ton	kg/Mg	lb/ton	kg/Mg
Aluminum	6.13 E-01	3.06 E-01	4.18 E-03	2.09 E-03	2.62 E-03	1.31 E-03
Antimony[d]	1.99 E-02	9.96 E-03	2.13 E-04	1.15 E-04	1.41 E-04	7.04 E-05
Arsenic[d]	3.32 E-04	1.66 E-04				
Barium	8.93 E-02	4.46 E-02	2.71 E-04	1.35 E-04	1.25 E-04	6.25 E-05
Beryllium[d]	4.81 E-05	2.41 E-05	5.81 E-06	2.91 E-06		
Cadmium[d]	1.51 E-02	7.53 E-03	5.36 E-05	2.68 E-05	2.42 E-05	1.21 E-05
Chromium[d]	4.43 E-03	2.21 E-03	9.85 E-05	4.92 E-05	7.73 E-05	3.86 E-05
Copper	1.95 E-01	9.77 E-02	6.23 E-04	3.12 E-04	4.11 E-04	2.06 E-04
Lead[d]	1.24 E-01	6.19 E-02	1.89 E-04	9.47 E-05	7.38 E-05	3.69 E-05
Mercury[d]	8.68 E-02	4.34 E-02	6.65 E-02	3.33 E-02	7.86 E-03	3.93 E-03
Nickel[d]	3.53 E-03	1.77 E-03	8.69 E-05	4.34 E-05	3.58 E-05	1.79 E-05
Silver	1.30 E-04	6.51 E-05	9.23 E-05	4.61 E-05	8.05 E-05	4.03 E-05
Thallium	7.58 E-04	3.79 E-04				

[a] References 7-43. Source Classification Codes 5-01-005-05, 5-02-005-05. ND = no data. Blanks indicate no data.
[b] SD = Spray Dryer.
[c] FF = Fabric Filter.
[d] Hazardous air pollutant listed in the *Clean Air Act*.

Table 2.3-18 (English And Metric Units). ROTARY KILN MEDICAL WASTE INCINERATOR EMISSION FACTORS FOR DIOXINS AND FURANS[a]

EMISSION FACTOR RATING: E

Congener[d]	Uncontrolled		SD/Fabric Filter[b]		SD/Carbon Injection/FF[c]	
	lb/ton	kg/Mg	lb/ton	kg/Mg	lb/ton	kg/Mg
2,3,7,8-TCDD	6.61 E-10	3.30 E-10	4.52 E-10	2.26 E-10	6.42 E-11	3.21 E-11
Total TCDD	7.23 E-09	3.61 E-09	4.16 E-09	2.08 E-09	1.55 E-10	7.77 E-11
Total CDD	7.49 E-07	3.75 E-07	5.79 E-08	2.90 E-08	2.01 E-08	1.01 E-08
2,3,7,8-TCDF	1.67 E-08	8.37 E-09	1.68 E-08	8.42 E-09	4.96 E-10	2.48 E-10
Total TCDF	2.55 E-07	1.27 E-07	1.92 E-07	9.58 E-08	1.15 E-08	5.74 E-09
Total CDF	5.20 E-06	2.60 E-06	7.91 E-07	3.96 E-07	7.57 E-08	3.78 E-08

[a] References 7-43. Source Classification Codes 5-01-005-05, 5-02-005-05.
[b] SD = Spray Dryer.
[c] FF = Fabric Filter.
[d] Hazardous air pollutants listed in the *Clean Air Act*.

References For Section 2.3

1. *Locating And Estimating Air Toxic Emissions From Medical Waste Incinerators*, U. S. Environmental Protection Agency, Rochester, New York, September 1991.

2. *Hospital Waste Combustion Study: Data Gathering Phase*, EPA-450/3-88-017, U. S. Environmental Protection Agency, Research Triangle Park, North Carolina, December 1988.

3. C. R. Brunner, *"Biomedical Waste Incineration"*, presented at the 80th Annual Meeting of the Air Pollution Control Association, New York, New York, June 21-26, 1987. p.10.

4. *Flue Gas Cleaning Technologies For Medical Waste Combustors, Final Report*, U. S. Environmental Protection Agency, Research Triangle Park, North Carolina, June 1990.

5. *Municipal Waste Combustion Study; Recycling Of Solid Waste*, U. S. Environmental Protection Agency, EPA Contract 68-02-433, pp.5-6.

6. S. Black and J. Netherton, *Disinfection, Sterilization, And Preservation. Second Edition*, 1977, p. 729.

7. J. McCormack, *et al.*, *Evaluation Test On A Small Hospital Refuse Incinerator At Saint Bernardine's Hospital In San Bernardino, California*, California Air Resources Board, July 1989.

8. *Medical Waste Incineration Emission Test Report, Cape Fear Memorial Hospital, Wilmington, North Carolina*, U. S. Environmental Protection Agency, December 1991.

9. *Medical Waste Incineration Emission Test Report, Jordan Hospital, Plymouth, Massachusetts*, U. S. Environmental Protection Agency, February 1992.

10. J. E. McCormack, *Evaluation Test Of The Kaiser Permanente Hospital Waste Incinerator in San Diego*, California Air Resources Board, March 1990.

11. *Medical Waste Incineration Emission Test Report, Lenoir Memorial Hospital, Kinston, North Carolina*, U. S. Environmental Protection Agency, August 12, 1991.

12. *Medical Waste Incineration Emission Test Report, AMI Central Carolina Hospital, Sanford, North Carolina*, U. S. Environmental Protection Agency, December 1991.

13. A. Jenkins, *Evaluation Test On A Hospital Refuse Incinerator At Cedars Sinai Medical Center, Los Angeles, California*, California Air Resources Board, April 1987.

14. A. Jenkins, *Evaluation Test On A Hospital Refuse Incinerator At Saint Agnes Medical Center, Fresno, California*, California Air Resources Board, April 1987.

15. A. Jenkins, *et al.*, *Evaluation Retest On A Hospital Refuse Incinerator At Sutter General Hospital, Sacramento, California*, California Air Resources Board, April 1988.

16. *Test Report For Swedish American Hospital Consumat Incinerator*, Beling Consultants, Rockford, Illinois, December 1986.

17. J. E. McCormack, *ARB Evaluation Test Conducted On A Hospital Waste Incinerator At Los Angeles County--USC Medical Center, Los Angeles, California*, California Air Resources Board, January 1990.

18. M. J. Bumbaco, *Report On A Stack Sampling Program To Measure The Emissions Of Selected Trace Organic Compounds, Particulates, Heavy Metals, And HCl From The Royal Jubilee Hospital Incinerator, Victoria, British Columbia*, Environmental Protection Programs Directorate, April 1983.

19. *Medical Waste Incineration Emission Test Report, Borgess Medical Center, Kalamazoo, Michigan*, EMB Report 91-MWI-9, U. S. Environmental Protection Agency, Office of Air Quality Planning and Standards, December 1991.

20. *Medical Waste Incineration Emission Test Report, Morristown Memorial Hospital, Morristown, New Jersey*, EMB Report 91-MWI-8, U. S. Environmental Protection Agency, Office of Air Quality Planning and Standards, December 1991.

21. *Report Of Emission Tests, Burlington County Memorial Hospital, Mount Holly, New Jersey*, New Jersey State Department of Environmental Protection, November 28, 1989.

22. *Results Of The November 4 And 11, 1988 Particulate And Chloride Emission Compliance Test On The Morse Boulger Incinerator At The Mayo Foundation Institute Hills Research Facility Located In Rochester, Minnesota*, HDR Techserv, Inc., November 39, 1988.

23. *Source Emission Tests At ERA Tech, North Jackson, Ohio*, Custom Stack Analysis Engineering Report, CSA Company, December 28, 1988.

24. Memo to Data File, Hershey Medical Center, Derry Township, Pennsylvania, from Thomas P. Bianca, Environmental Resources, Commonwealth of Pennsylvania, May 9, 1990.

25. *Stack Emission Testing, Erlanger Medical Center, Chattanooga, Tennessee*, Report I-6299-2, Campbell & Associates, May 6, 1988.

26. *Emission Compliance Test Program, Nazareth Hospital, Philadelphia, Pennsylvania*, Ralph Manco, Nazareth Hospital, September 1989.

27. *Report Of Emission Tests, Hamilton Hospital, Hamilton, New Jersey*, New Jersey State Department of Environmental Protection, December 19, 1989.

28. *Report of Emission Tests, Raritan Bay Health Services Corporation, Perth Amboy, New Jersey*, New Jersey State Department of Environmental Protection, December 13, 1989.

29. K. A. Hansen, *Source Emission Evaluation On A Rotary Atomizing Scrubber At Klamath Falls, Oregon*, AM Test, Inc., July 19, 1989.

30. A. A. Wilder, *Final Report For Air Emission Measurements From A Hospital Waste Incinerator*, Safeway Disposal Systems, Inc., Middletown, Connecticut.

31. *Stack Emission Testing, Erlanger Medical Center, Chattanooga, Tennessee*, Report I-6299, Campbell & Associates, April 13, 1988.

32. *Compliance Emission Testing For Memorial Hospital, Chattanooga, Tennessee*, Air Systems Testing, Inc., July 29, 1988.

33. *Source Emission Tests At ERA Tech, Northwood, Ohio*, Custom Stack Analysis Engineering Report, CSA Company, July 27, 1989.

34. *Compliance Testing For Southland Exchange Joint Venture, Hampton, South Carolina*, ETS, Inc., July 1989.

35. *Source Test Report, MEGA Of Kentucky*, Louisville, Kentucky, August, 1988.

36. *Report On Particulate And HCl Emission Tests On Therm-Tec Incinerator Stack, Elyra, Ohio*, Maurice L. Kelsey & Associates, Inc., January 24, 1989.

37. *Compliance Emission Testing For Particulate And Hydrogen Chloride At Bio-Medical Service Corporation, Lake City, Georgia*, Air Techniques Inc., May 8, 1989.

38. *Particulate And Chloride Emission Compliance Test On The Environmental Control Incinerator At The Mayo Foundation Institute Hills Research Facility, Rochester, Minnesota*, HDR Techserv, Inc., November 30, 1988.

39. *Report On Particulate And HCl Emission Tests On Therm-Tec Incinerator Stack, Cincinnati, Ohio*, Maurice L. Kelsey & Associates, Inc., May 22, 1989.

40. *Report On Compliance Testing, Hamot Medical Center, Erie, Pennsylvania*, Hamot Medical Center, July 19, 1990.

41. *Compliance Emission Testing For HCA North Park Hospital, Hixson, Tennessee*, Air Systems Testing, Inc., February 16, 1988.

42. *Compliance Particulate Emission Testing On The Pathological Waste Incinerator, Humana Hospital-East Ridge, Chattanooga, Tennessee*, Air Techniques, Inc., November 12, 1987.

43. *Report Of Emission Tests, Helene Fuld Medical Center, Trenton, New Jersey*, New Jersey State Department of Environmental Protection, December 1, 1989.

2.4 Municipal Solid Waste Landfills

2.4.1 General[1-4]

A municipal solid waste (MSW) landfill unit is a discrete area of land or an excavation that receives household waste, and that is not a land application unit, surface impoundment, injection well, or waste pile. An MSW landfill unit may also receive other types of wastes, such as commercial solid waste, nonhazardous sludge, and industrial solid waste. The municipal solid waste types potentially accepted by MSW landfills include (most landfills accept only a few of the following categories):

- MSW,
- Household hazardous waste,
- Municipal sludge,
- Municipal waste combustion ash,
- Infectious waste,
- Waste tires,
- Industrial non-hazardous waste,
- Conditionally exempt small quantity generator (CESQG) hazardous waste,
- Construction and demolition waste,
- Agricultural wastes,
- Oil and gas wastes, and
- Mining wastes.

In the United States, approximately 57 percent of solid waste is landfilled, 16 percent is incinerated, and 27 percent is recycled or composted. There were an estimated 2,500 active MSW landfills in the United States in 1995. These landfills were estimated to receive 189 million megagrams (Mg) (208 million tons) of waste annually, with 55 to 60 percent reported as household waste, and 35 to 45 percent reported as commercial waste.

2.4.2 Process Description[2,5]

There are three major designs for municipal landfills. These are the area, trench, and ramp methods. All of these methods utilize a three step process, which includes spreading the waste, compacting the waste, and covering the waste with soil. The trench and ramp methods are not commonly used, and are not the preferred methods when liners and leachate collection systems are utilized or required by law. The area fill method involves placing waste on the ground surface or landfill liner, spreading it in layers, and compacting with heavy equipment. A daily soil cover is spread over the compacted waste. The trench method entails excavating trenches designed to receive a day's worth of waste. The soil from the excavation is often used for cover material and wind breaks. The ramp method is typically employed on sloping land, where waste is spread and compacted similar to the area method, however, the cover material obtained is generally from the front of the working face of the filling operation.

Modern landfill design often incorporates liners constructed of soil (i.e., recompacted clay), or synthetics (i.e., high density polyethylene), or both to provide an impermeable barrier to leachate (i.e., water that has passed through the landfill) and gas migration from the landfill.

2.4.3 Control Technology[1,2,6]

The Resource Conservation and Recovery Act (RCRA) Subtitle D regulations promulgated on October 9, 1991 require that the concentration of methane generated by MSW landfills not exceed 25 percent of the lower explosive limit (LEL) in on-site structures, such as scale houses, or the LEL at the facility property boundary.

The New Source Performance Standards (NSPS) and Emission Guidelines for air emissions from MSW landfills for certain new and existing landfills were published in the Federal Register on March 1, 1996. The regulation requires that Best Demonstrated Technology (BDT) be used to reduce MSW landfill emissions from affected new and existing MSW landfills emitting greater than or equal to 50 Mg/yr (55 tons/yr) of non-methane organic compounds (NMOCs). The MSW landfills that are affected by the NSPS/Emission Guidelines are each new MSW landfill, and each existing MSW landfill that has accepted waste since November 8, 1987, or that has capacity available for future use. The NSPS/Emission Guidelines affect landfills with a design capacity of 2.5 million Mg (2.75 million tons) or more. Control systems require: (1) a well-designed and well-operated gas collection system, and (2) a control device capable of reducing NMOCs in the collected gas by 98 weight-percent.

Landfill gas (LFG) collection systems are either active or passive systems. Active collection systems provide a pressure gradient in order to extract LFG by use of mechanical blowers or compressors. Passive systems allow the natural pressure gradient created by the increase in pressure created by LFG generation within the landfill to mobilize the gas for collection.

LFG control and treatment options include (1) combustion of the LFG, and (2) purification of the LFG. Combustion techniques include techniques that do not recover energy (i.e., flares and thermal incinerators), and techniques that recover energy (i.e., gas turbines and internal combustion engines) and generate electricity from the combustion of the LFG. Boilers can also be employed to recover energy from LFG in the form of steam. Flares involve an open combustion process that requires oxygen for combustion, and can be open or enclosed. Thermal incinerators heat an organic chemical to a high enough temperature in the presence of sufficient oxygen to oxidize the chemical to carbon dioxide (CO_2) and water. Purification techniques can also be used to process raw landfill gas to pipeline quality natural gas by using adsorption, absorption, and membranes.

2.4.4 Emissions[2,7]

Methane (CH_4) and CO_2 are the primary constituents of landfill gas, and are produced by microorganisms within the landfill under anaerobic conditions. Transformations of CH_4 and CO_2 are mediated by microbial populations that are adapted to the cycling of materials in anaerobic environments. Landfill gas generation, including rate and composition, proceeds through four phases. The first phase is aerobic [i.e., with oxygen (O_2) available] and the primary gas produced is CO_2. The second phase is characterized by O_2 depletion, resulting in an anaerobic environment, where large amounts of CO_2 and some hydrogen (H_2) are produced. In the third phase, CH_4 production begins, with an accompanying reduction in the amount of CO_2 produced. Nitrogen (N_2) content is initially high in landfill gas in the first phase, and declines sharply as the landfill proceeds through the second and third phases. In the fourth phase, gas production of CH_4, CO_2, and N_2 becomes fairly steady. The total time and phase duration of gas generation varies with landfill conditions (i.e., waste composition, design management, and anaerobic state).

Typically, LFG also contains a small amount of non-methane organic compounds (NMOC). This NMOC fraction often contains various organic hazardous air pollutants (HAP), greenhouse gases (GHG), and compounds associated with stratospheric ozone depletion. The NMOC fraction also contains volatile organic compounds (VOC). The weight fraction of VOC can be determined by subtracting the weight fractions of individual compounds that are non-photochemically reactive (i.e., negligibly-reactive organic compounds as defined in 40 CFR 51.100).

Other emissions associated with MSW landfills include combustion products from LFG control and utilization equipment (i.e., flares, engines, turbines, and boilers). These include carbon monoxide (CO), oxides of nitrogen (NO_x), sulfur dioxide (SO_2), hydrogen chloride (HCl), particulate matter (PM) and other combustion products (including HAPs). PM emissions can also be generated in the form of fugitive dust created by mobile sources (i.e., garbage trucks) traveling along paved and unpaved surfaces. The reader should consult AP-42 Volume I Sections 13.2.1 and 13.2.2 for information on estimating fugitive dust emissions from paved and unpaved roads.

The rate of emissions from a landfill is governed by gas production and transport mechanisms. Production mechanisms involve the production of the emission constituent in its vapor phase through vaporization, biological decomposition, or chemical reaction. Transport mechanisms involve the transportation of a volatile constituent in its vapor phase to the surface of the landfill, through the air boundary layer above the landfill, and into the atmosphere. The three major transport mechanisms that enable transport of a volatile constituent in its vapor phase are diffusion, convection, and displacement.

2.4.4.1 Uncontrolled Emissions — To estimate uncontrolled emissions of the various compounds present in landfill gas, total landfill gas emissions must first be estimated. Uncontrolled CH_4 emissions may be estimated for individual landfills by using a theoretical first-order kinetic model of methane production developed by the EPA.[8] This model is known as the Landfill Air Emissions Estimation model, and can be accessed from the Office of Air Quality Planning and Standards Technology Transfer Network Website (OAQPS TTN Web) in the Clearinghouse for Inventories and Emission Factors (CHIEF) technical area (URL http://www.epa.gov/ttn/chief). The Landfill Air Emissions Estimation model equation is as follows:

$$Q_{CH_4} = L_o R (e^{-kc} - e^{-kt}) \quad (1)$$

where:

Q_{CH_4}	=	Methane generation rate at time t, m^3/yr;
L_O	=	Methane generation potential, m^3 CH_4/Mg refuse;
R	=	Average annual refuse acceptance rate during active life, Mg/yr;
e	=	Base log, unitless;
k	=	Methane generation rate constant, yr^{-1};
c	=	Time since landfill closure, yrs (c = 0 for active landfills); and
t	=	Time since the initial refuse placement, yrs.

It should be noted that the model above was designed to estimate LFG generation and not LFG emissions to the atmosphere. Other fates may exist for the gas generated in a landfill, including capture and subsequent microbial degradation within the landfill's surface layer. Currently, there are no data that adequately address this fate. It is generally accepted that the bulk of the gas generated will be emitted through cracks or other openings in the landfill surface.

Site-specific landfill information is generally available for variables R, c, and t. When refuse acceptance rate information is scant or unknown, R can be determined by dividing the refuse in place by the age of the landfill. If a facility has documentation that a certain segment (cell) of a landfill received *only* nondegradable refuse, then the waste from this segment of the landfill can be excluded from the calculation of R. Nondegradable refuse includes concrete, brick, stone, glass, plaster, wallboard, piping, plastics, and metal objects. The average annual acceptance rate should only be estimated by this method when there is inadequate information available on the actual average acceptance rate. The time variable, t, includes the total number of years that the refuse has been in place (including the number of years that the landfill has accepted waste and, if applicable, has been closed).

Values for variables L_o and k must be estimated. Estimation of the potential CH_4 generation capacity of refuse (L_o) is generally treated as a function of the moisture and organic content of the refuse. Estimation of the CH_4 generation constant (k) is a function of a variety of factors, including moisture, pH, temperature, and other environmental factors, and landfill operating conditions. Specific CH_4 generation constants can be computed by the use of EPA Method 2E (40 CFR Part 60 Appendix A).

The Landfill Air Emission Estimation model includes both regulatory default values and recommended AP-42 default values for L_o and k. The regulatory defaults were developed for compliance purposes (NSPS/Emission Guideline). As a result, the model contains conservative L_o and k default values in order to protect human health, to encompass a wide range of landfills, and to encourage the use of site-specific data. Therefore, different L_o and k values may be appropriate in estimating landfill emissions for particular landfills and for use in an emissions inventory.

Recommended AP-42 defaults include a k value of 0.04/yr for areas recieving 25 inches or more of rain per year. A default k of 0.02/yr should be used in drier areas (<25 inches/yr). An L_o value of 100 m^3/Mg (3,530 ft^3/ton) refuse is appropriate for most landfills. Although the recommended default k and L_o are based upon the best fit to 21 different landfills, the predicted methane emissions ranged from 38 to 492% of actual, and had a relative standard deviation of 0.85. It should be emphasized that in order to comply with the NSPS/Emission Guideline, the regulatory defaults for k and L_o must be applied as specified in the final rule.

When gas generation reaches steady state conditions, LFG consists of approximately 40 percent by volume CO_2, 55 percent CH_4, 5 percent N_2 (and other gases), and trace amounts of NMOCs. Therefore, the estimate derived for CH_4 generation using the Landfill Air Emissions Estimation model can also be used to represent CO_2 generation. Addition of the CH_4 and CO_2 emissions will yield an estimate of total landfill gas emissions. If site-specific information is available to suggest that the CH_4 content of landfill gas is not 55 percent, then the site-specific information should be used, and the CO_2 emission estimate should be adjusted accordingly.

Most of the NMOC emissions result from the volatilization of organic compounds contained in the landfilled waste. Small amounts may be created by biological processes and chemical reactions within the landfill. The current version of the Landfill Air Emissions Estimation model contains a proposed regulatory default value for total NMOC of 4,000 ppmv, expressed as hexane. However, available data show that there is a range of over 4,400 ppmv for total NMOC values from landfills. The proposed regulatory default value for NMOC concentration was developed for regulatory compliance purposes and to provide the most cost-effective default values on a national basis. For emissions inventory purposes, site-specific information should be taken into account when determining the total NMOC concentration. In the absence of site-specific information, a value of 2,420 ppmv as hexane is suggested for landfills known to have co-disposal of MSW and non-residential waste. If the landfill is known to contain only MSW or

have very little organic commercial/industrial wastes, then a total NMOC value of 595 ppmv as hexane should be used. In addition, as with the landfill model defaults, the regulatory default value for NMOC content must be used in order to comply with the NSPS/Emission Guideline.

If a site-specific total pollutant concentration is available (i.e., as measured by EPA Reference Method 25C), it must be corrected for air infiltration which can occur by two different mechanisms: LFG sample dilution, and air intrusion into the landfill. These corrections require site-specific data for the LFG CH_4, CO_2, nitrogen (N_2), and oxygen (O_2) content. If the ratio of N_2 to O_2 is less than or equal to 4.0 (as found in ambient air), then the total pollutant concentration is adjusted for sample dilution by assuming that CO_2 and CH_4 are the primary (100 percent) constituents of landfill gas, and the following equation is used:

$$C_P \text{ (ppmv) (corrected for air infiltration)} = \frac{C_P \text{ (ppmv) } (1 \times 10^6)}{C_{CO_2} \text{ (ppmv)} + C_{CH_4} \text{ (ppmv)}} \qquad (2)$$

where:

C_P	=	Concentration of pollutant P in landfill gas (i.e., NMOC as hexane), ppmv;
C_{CO_2}	=	CO_2 concentration in landfill gas, ppmv;
C_{CH_4}	=	CH_4 Concentration in landfill gas, ppmv; and
1×10^6	=	Constant used to correct concentration of P to units of ppmv.

If the ratio of N_2 to O_2 concentrations (i.e., C_{N_2}, C_{O_2}) is greater than 4.0, then the total pollutant concentration should be adjusted for air intrusion into the landfill by using equation 2 and adding the concentration of N_2 (i.e., C_{N_2}) to the denominator. Values for C_{CO_2}, C_{CH_4}, C_{N_2}, C_{O_2}, can usually be found in the source test report for the particular landfill along with the total pollutant concentration data.

To estimate emissions of NMOC or other landfill gas constituents, the following equation should be used:

$$Q_P = 1.82\ Q_{CH_4} * \frac{C_P}{(1 \times 10^6)} \qquad (3)$$

where:

Q_P	=	Emission rate of pollutant P (i.e. NMOC), m^3/yr;
Q_{CH_4}	=	CH_4 generation rate, m^3/yr (from the Landfill Air Emissions Estimation model);
C_P	=	Concentration of P in landfill gas, ppmv; and
1.82	=	Multiplication factor (assumes that approximately 55 percent of landfill gas is CH_4 and 45 percent is CO_2, N_2, and other constituents).

Uncontrolled mass emissions per year of total NMOC (as hexane), CO_2, CH_4, and speciated organic and inorganic compounds can be estimated by the following equation:

$$UM_P = Q_P * \left[\frac{MW_P * 1 \text{ atm}}{(8.205\text{x}10^{-5} \text{ m}^3\text{-atm/gmol-}^\circ\text{K})(1000\text{g/kg})(273 + T\,^\circ\text{K})} \right] \quad (4)$$

where:

UM_P	=	Uncontrolled mass emissions of pollutant P (i.e., NMOC), kg/yr;
MW_P	=	Molecular weight of P, g/gmol (i.e., 86.18 for NMOC as hexane);
Q_P	=	NMOC emission rate of P, m^3/yr; and
T	=	Temperature of landfill gas, °C.

This equation assumes that the operating pressure of the system is approximately 1 atmosphere. If the temperature of the landfill gas is not known, a temperature of 25°C (77°F) is recommended.

Uncontrolled default concentrations of speciated organics along with some inorganic compounds are presented in Table 2.4-1. These default concentrations have already been corrected for air infiltration and can be used as input parameters to equation 3 or the Landfill Air Emission Estimation model for estimating speciated emissions from landfills when site-specific data are not available. An analysis of the data, based on the co-disposal history (with non-residential wastes) of the individual landfills from which the concentration data were derived, indicates that for benzene, NMOC, and toluene, there is a difference in the uncontrolled concentrations. Table 2.4-2 presents the corrected concentrations for benzene, NMOC, and toluene to use based on the site's co-disposal history.

It is important to note that the compounds listed in Tables 2.4-1 and 2.4-2 are not the only compounds likely to be present in LFG. The listed compounds are those that were identified through a review of the available literature. The reader should be aware that additional compounds are likely present, such as those associated with consumer or industrial products. Given this information, extreme caution should be exercised in the use of the default VOC weight fractions and concentrations given at the bottom of Table 2.4-2. These default VOC values are heavily influenced by the ethane content of the LFG. Available data have shown that there is a range of over 1,500 ppmv in LFG ethane content among landfills.

2.4.4.2 Controlled Emissions — Emissions from landfills are typically controlled by installing a gas collection system, and combusting the collected gas through the use of internal combustion engines, flares, or turbines. Gas collection systems are not 100 percent efficient in collecting landfill gas, so emissions of CH_4 and NMOC at a landfill with a gas recovery system still occur. To estimate controlled emissions of CH_4, NMOC, and other constituents in landfill gas, the collection efficiency of the system must first be estimated. Reported collection efficiencies typically range from 60 to 85 percent, with an average of 75 percent most commonly assumed. Higher collection efficiencies may be achieved at some sites (i.e., those engineered to control gas emissions). If site-specific collection efficiencies are available (i.e., through a comprehensive surface sampling program), then they should be used instead of the 75 percent average.

Controlled emission estimates also need to take into account the control efficiency of the control device. Control efficiencies based on test data for the combustion of CH_4, NMOC, and some speciated organics with differing control devices are presented in Table 2.4-3. Emissions from the control devices need to be added to the uncollected emissions to estimate total controlled emissions.

Controlled CH_4, NMOC, and speciated emissions can be calculated with equation 5. It is assumed that the landfill gas collection and control system operates 100 percent of the time. Minor durations of system downtime associated with routine maintenance and repair (i.e., 5 to 7 percent) will not appreciably effect emission estimates. The first term in equation 5 accounts for emissions from uncollected landfill gas, while the second term accounts for emissions of the pollutant that were collected but not combusted in the control or utilization device:

$$CM_P = \left[UM_P * \left(1 - \frac{\eta_{col}}{100}\right)\right] + \left[UM_P * \frac{\eta_{col}}{100} * \left(1 - \frac{\eta_{cnt}}{100}\right)\right] \quad (5)$$

where:

CM_P	=	Controlled mass emissions of pollutant P, kg/yr;
UM_P	=	Uncontrolled mass emissions of P, kg/yr (from equation 4 or the Landfill Air Emissions Estimation Model);
η_{col}	=	Collection efficiency of the landfill gas collection system, percent; and
η_{cnt}	=	Control efficiency of the landfill gas control or utilization device, percent.

Emission factors for the secondary compounds, CO and NO_x, exiting the control device are presented in Tables 2.4-4 and 2.4-5. These emission factors should be used when equipment vendor guarantees are not available.

Controlled emissions of CO_2 and sulfur dioxide (SO_2) are best estimated using site-specific landfill gas constituent concentrations and mass balance methods.[68] If site-specific data are not available, the data in tables 2.4-1 through 2.4-3 can be used with the mass balance methods that follow.

Controlled CO_2 emissions include emissions from the CO_2 component of landfill gas (equivalent to uncontrolled emissions) and additional CO_2 formed during the combustion of landfill gas. The bulk of the CO_2 formed during landfill gas combustion comes from the combustion of the CH_4 fraction. Small quantities will be formed during the combustion of the NMOC fraction, however, this typically amounts to less than 1 percent of total CO_2 emissions by weight. Also, the formation of CO through incomplete combustion of landfill gas will result in small quantities of CO_2 not being formed. This contribution to the overall mass balance picture is also very small and does not have a significant impact on overall CO_2 emissions.[68]

The following equation which assumes a 100 percent combustion efficiency for CH_4 can be used to estimate CO_2 emissions from controlled landfills:

$$CM_{CO_2} = UM_{CO_2} + \left[UM_{CH_4} * \frac{\eta_{col}}{100} * 2.75\right] \quad (6)$$

where:

CM_{CO_2}	=	Controlled mass emissions of CO_2, kg/yr;
UM_{CO_2}	=	Uncontrolled mass emissions of CO_2, kg/yr (from equation 4 or the Landfill Air Emission Estimation Model);
UM_{CH_4}	=	Uncontrolled mass emissions of CH_4, kg/yr (from equation 4 on the Landfill Air Emission Estimation Model);
η_{col}	=	Efficiency of the landfill gas collection system, percent; and
2.75	=	Ratio of the molecular weight of CO_2 to the molecular weight of CH_4.

To prepare estimates of SO_2 emissions, data on the concentration of reduced sulfur compounds within the landfill gas are needed. The best way to prepare this estimate is with site-specific information on the total reduced sulfur content of the landfill gas. Often these data are expressed in ppmv as sulfur (S). Equations 3 and 4 should be used first to determine the uncontrolled mass emission rate of reduced sulfur compounds as sulfur. Then, the following equation can be used to estimate SO_2 emissions:

$$CM_{SO_2} = UM_S * \frac{\eta_{col}}{100} * 2.0 \qquad (7)$$

where:

CM_{SO_2}	=	Controlled mass emissions of SO_2, kg/yr;
UM_S	=	Uncontrolled mass emissions of reduced sulfur compounds as sulfur, kg/yr (from equations 3 and 4);
η_{col}	=	Efficiency of the landfill gas collection system, percent; and
2.0	=	Ratio of the molecular weight of SO_2 to the molecular weight of S.

The next best method to estimate SO_2 concentrations, if site-specific data for total reduced sulfur compounds as sulfur are not available, is to use site-specific data for speciated reduced sulfur compound concentrations. These data can be converted to ppmv as S with equation 8. After the total reduced sulfur as S has been obtained from equation 8, then equations 3, 4, and 7 can be used to derive SO_2 emissions.

$$C_S = \sum_{i=1}^{n} C_P * S_P \qquad (8)$$

where:

C_S	=	Concentration of total reduced sulfur compounds, ppmv as S (for use in equation 3);
C_P	=	Concentration of each reduced sulfur compound, ppmv;
S_P	=	Number of moles of S produced from the combustion of each reduced sulfur compound (i.e., 1 for sulfides, 2 for disulfides); and
n	=	Number of reduced sulfur compounds available for summation.

If no site-specific data are available, a value of 46.9 ppmv can be assumed for C_S (for use in equation 3). This value was obtained by using the default concentrations presented in Table 2.4-1 for reduced sulfur compounds and equation 8.

Hydrochloric acid [Hydrogen Chloride (HCl)] emissions are formed when chlorinated compounds in LFG are combusted in control equipment. The best methods to estimate emissions are mass balance methods that are analogous to those presented above for estimating SO_2 emissions. Hence, the best source of data to estimate HCl emissions is site-specific LFG data on total chloride [expressed in ppmv as the chloride ion (Cl^-)]. If these data are not available, then total chloride can be estimated from data on individual chlorinated species using equation 9 below. However, emission estimates may be

underestimated, since not every chlorinated compound in the LFG will be represented in the laboratory report (i.e., only those that the analytical method specifies).

$$C_{Cl} = \sum_{i=1}^{n} C_P * Cl_P \qquad (9)$$

where:

C_{Cl}	=	Concentration of total chloride, ppmv as Cl^- (for use in equation 3);
C_P	=	Concentration of each chlorinated compound, ppmv;
Cl_P	=	Number of moles of Cl^- produced from the combustion of each chlorinated compound (i.e., 3 for 1,1,1-trichloroethane); and
n	=	Number of chlorinated compounds available for summation.

After the total chloride concentration (C_{Cl}) has been estimated, equations 3 and 4 should be used to determine the total uncontrolled mass emission rate of chlorinated compounds as chloride ion (UM_{Cl}). This value is then used in equation 10 below to derive HCl emission estimates:

$$CM_{HCl} = UM_{Cl} * \frac{\eta_{col}}{100} * 1.03 * \left(1 - \frac{\eta_{cnt}}{100}\right) \qquad (10)$$

where:

CM_{HCl}	=	Controlled mass emissions of HCl, kg/yr;
UM_{Cl}	=	Uncontrolled mass emissions of chlorinated compounds as chloride, kg/yr (from equations 3 and 4);
η_{col}	=	Efficiency of the landfill gas collection system, percent;
1.03	=	Ratio of the molecular weight of HCl to the molecular weight of Cl^-; and
η_{cnt}	=	Control efficiency of the landfill gas control or utilization device, percent.

In estimating HCl emissions, it is assumed that all of the chloride ion from the combustion of chlorinated LFG constituents is converted to HCl. If an estimate of the control efficiency, η_{cnt}, is not available, then the high end of the control efficiency range for the equipment listed in Table 9 should be used. This assumption is recommended to assume that HCl emissions are not under-estimated.

If site-specific data on total chloride or speciated chlorinated compounds are not available, then a default value of 42.0 ppmv can be used for C_{Cl}. This value was derived from the default LFG constituent concentrations presented in Table 2.4-1. As mentioned above, use of this default may produce underestimates of HCl emissions since it is based only on those compounds for which analyses have been performed. The constituents listed in Table 2.4-1are likely not all of the chlorinated compounds present in LFG.

The reader is referred to Sections 11.2-1 (Unpaved Roads, SCC 50100401), and 11-2.4 (Heavy Construction Operations) of Volume I, and Section II-7 (Construction Equipment) of Volume II, of the AP-42 document for determination of associated fugitive dust and exhaust emissions from these emission sources at MSW landfills.

2.4.5 Updates Since the Fifth Edition

The Fifth Edition was released in January 1995. This is revision includes major revisions of the text and recommended emission factors conained in the section. The most significant revisions to this section since publication in the Fifth Edition are summarized below.

- The equations to calculate the CH_4, CO_2 and other constituents were simplified.
- The default L0 and k were revised based upon an expanded base of gas generation data.
- The default ratio of CO_2 to CH_4 was revised based upon averages observed in available source test reports.
- The default concentrations of LFG constituents were revised based upon additional data.
- Additional control efficiencies were included and existing efficiencies were revised based upon additional emission test data.
- Revised and expanded the recommended emission factors for secondary compounds emitted from typical control devices.

Table 2.4-1. DEFAULT CONCENTRATIONS FOR LFG CONSTITUENTS[a]

(SCC 50100402, 50300603)

Compound	Molecular Weight	Default Concentration (ppmv)	Emission Factor Rating
1,1,1-Trichloroethane (methyl chloroform)[a]	133.42	0.48	B
1,1,2,2-Tetrachloroethane[a]	167.85	1.11	C
1,1-Dichloroethane (ethylidene dichloride)[a]	98.95	2.35	B
1,1-Dichloroethene (vinylidene chloride)[a]	96.94	0.20	B
1,2-Dichloroethane (ethylene dichloride)[a]	98.96	0.41	B
1,2-Dichloropropane (propylene dichloride)[a]	112.98	0.18	D
2-Propanol (isopropyl alcohol)	60.11	50.1	E
Acetone	58.08	7.01	B
Acrylonitrile[a]	53.06	6.33	D
Bromodichloromethane	163.83	3.13	C
Butane	58.12	5.03	C
Carbon disulfide[a]	76.13	0.58	C
Carbon monoxide[b]	28.01	141	E
Carbon tetrachloride[a]	153.84	0.004	B
Carbonyl sulfide[a]	60.07	0.49	D
Chlorobenzene[a]	112.56	0.25	C
Chlorodifluoromethane	86.47	1.30	C
Chloroethane (ethyl chloride)[a]	64.52	1.25	B
Chloroform[a]	119.39	0.03	B
Chloromethane	50.49	1.21	B
Dichlorobenzene[c]	147	0.21	E
Dichlorodifluoromethane	120.91	15.7	A
Dichlorofluoromethane	102.92	2.62	D
Dichloromethane (methylene chloride)[a]	84.94	14.3	A
Dimethyl sulfide (methyl sulfide)	62.13	7.82	C
Ethane	30.07	889	C
Ethanol	46.08	27.2	E
Ethyl mercaptan (ethanethiol)	62.13	2.28	D
Ethylbenzene[a]	106.16	4.61	B
Ethylene dibromide	187.88	0.001	E
Fluorotrichloromethane	137.38	0.76	B
Hexane[a]	86.18	6.57	B
Hydrogen sulfide	34.08	35.5	B
Mercury (total)[a,d]	200.61	2.92×10^{-4}	E

Table 2.4-1. (Concluded)

Compound	Molecular Weight	Default Concentration (ppmv)	Emission Factor Rating
Methyl ethyl ketone[a]	72.11	7.09	A
Methyl isobutyl ketone[a]	100.16	1.87	B
Methyl mercaptan	48.11	2.49	C
Pentane	72.15	3.29	C
Perchloroethylene (tetrachloroethylene)[a]	165.83	3.73	B
Propane	44.09	11.1	B
t-1,2-dichloroethene	96.94	2.84	B
Trichloroethylene (trichloroethene)[a]	131.38	2.82	B
Vinyl chloride[a]	62.50	7.34	B
Xylenes[a]	106.16	12.1	B

NOTE: This is not an all-inclusive list of potential LFG constituents, only those for which test data were available at multiple sites. References 10-67. Source Classification Codes in parentheses.

[a] Hazardous Air Pollutants listed in Title III of the 1990 Clean Air Act Amendments.

[b] Carbon monoxide is not a typical constituent of LFG, but does exist in instances involving landfill (underground) combustion. Therefore, this default value should be used with caution. Of 18 sites where CO was measured, only 2 showed detectable levels of CO.

[c] Source tests did not indicate whether this compound was the para- or ortho- isomer. The para isomer is a Title III-listed HAP.

[d] No data were available to speciate total Hg into the elemental and organic forms.

Table 2.4-2. DEFAULT CONCENTRATIONS OF BENZENE, NMOC, AND TOLUENE BASED ON WASTE DISPOSAL HISTORY[a]

(SCC 50100402, 50300603)

Pollutant	Molecular Weight	Default Concentration (ppmv)	Emission Factor Rating
Benzene[b]	78.11		
Co-disposal		11.1	D
No or Unknown co-disposal		1.91	B
NMOC (as hexane)[c]	86.18		
Co-disposal		2420	D
No or Unknown co-disposal		595	B
Toluene[b]	92.13		
Co-disposal		165	D
No or Unknown co-disposal		39.3	A

[a] References 10-54. Source Classification Codes in parentheses.
[b] Hazardous Air Pollutants listed in Title III of the 1990 Clean Air Act Amendments.
[c] For NSPS/Emission Guideline compliance purposes, the default concentration for NMOC as specified in the final rule must be used. For purposes not associated with NSPS/Emission Guideline compliance, the default VOC content at co-disposal sites = 85 percent by weight (2,060 ppmv as hexane); at No or Unknown sites = 39 percent by weight 235 ppmv as hexane).

Table 2.4-3. CONTROL EFFICIENCIES FOR LFG CONSTITUENTS[a]

Control Device	Constituent[b]	Control Efficiency (%)		
		Typical	Range	Rating
Boiler/Steam Turbine (50100423)	NMOC	98.0	96-99+	D
	Halogenated Species	99.6	87-99+	D
	Non-Halogenated Species	99.8	67-99+	D
Flare[c] (50100410) (50300601)	NMOC	99.2	90-99+	B
	Halogenated Species	98.0	91-99+	C
	Non-Halogenated Species	99.7	38-99+	C
Gas Turbine (50100420)	NMOC	94.4	90-99+	E
	Halogenated Species	99.7	98-99+	E
	Non-Halogenated Species	98.2	97-99+	E
IC Engine (50100421)	NMOC	97.2	94-99+	E
	Halogenated Species	93.0	90-99+	E
	Non-Halogenated Species	86.1	25-99+	E

[a] References 10-67. Source Classification Codes in parentheses.
[b] Halogenated species are those containing atoms of chlorine, bromine, fluorine, or iodine. For any equipment, the control efficiency for mercury should be assumed to be 0. See section 2.4.4.2 for methods to estimate emissions of SO_2, CO_2, and HCl.
[c] Where information on equipment was given in the reference, test data were taken from enclosed flares. Control efficiencies are assumed to be equally representative of open flares.

Table 2.4-4. (Metric Units) EMISSION FACTORS FOR SECONDARY COMPOUNDS EXITING CONTROL DEVICES[a]

Control Device	Pollutant[b]	Typical Rate, kg/hr/dscmm Methane	Emission Factor Rating
Flare[c]	Nitrogen dioxide	0.039	C
(50100410)	Carbon monoxide	0.72	C
(50300601)	Particulate matter	0.016	D
IC Engine	Nitrogen dioxide	0.24	D
(50100421)	Carbon monoxide	0.45	C
	Particulate matter	0.046	E
Boiler/Steam Turbine[d]	Nitrogen dioxide	0.032	D
(50100423)	Carbon monoxide	5.4×10^{-3}	E
	Particulate matter	7.9×10^{-3}	D
Gas Turbine	Nitrogen dioxide	0.083	D
(50100420)	Carbon monoxide	0.22	E
	Particulate matter	0.021	E

[a] Source Classification Codes in parentheses.
[b] No data on PM size distributions were available, however for other gas-fired combustion sources, most of the particulate matter is less than 2.5 microns in diameter. Hence, this emission factor can be used to provide estimates of PM-10 or PM-2.5 emissions. See section 2.4.4.2 for methods to estimate CO_2, SO_2, and HCl.
[c] Where information on equipment was given in the reference, test data were taken from enclosed flares. Control efficiencies are assumed to be equally representative of open flares.
[d] All source tests were conducted on boilers, however emission factors should also be representative of steam turbines. Emission factors are representative of boilers equipped with low-NO_x burners and flue gas recirculation. No data were available for uncontrolled NO_x emissions.

Table 2.4-5. (English Units) EMISSION RATES FOR SECONDARY COMPOUNDS EXITING CONTROL DEVICES[a]

Control Device	Pollutant[b]	Typical Rate, lb/hr/dscfm Methane	Emission Factor Rating
Flare[c]	Nitrogen dioxide	2.4×10^{-3}	C
(50100410)	Carbon monoxide	0.045	C
(50300601)	Particulate matter	1.0×10^{-3}	D
IC Engine	Nitrogen dioxide	0.015	D
(50100421)	Carbon monoxide	0.028	C
	Particulate matter	2.9×10^{-3}	E
Boiler/Steam Turbine[d]	Nitrogen dioxide	2.0×10^{-3}	E
(50100423)	Carbon monoxide	3.4×10^{-4}	E
	Particulate matter	4.9×10^{-4}	E
Gas Turbine	Nitrogen dioxide	5.2×10^{-3}	D
(50100420)	Carbon monoxide	0.014	D
	Particulate matter	1.3×10^{-3}	E

[a] Source Classification Codes in parentheses.
[b] Based on data for other combustion sources, most of the particulate matter will be less than 2.5 microns in diameter. Hence, this emission rate can be used to provide estimates of PM-10 or PM-2.5 emissions. See section 2.4.4.2 for methods to estimate CO_2, SO_2, and HCl.
[c] Where information on equipment was given in the reference, test data were taken from enclosed flares. Control efficiencies are assumed to be equally representative of open flares.
[d] All source tests were conducted on boilers, however emission factors should also be representative of steam turbines. Emission factors are representative of boilers equipped with low-NO_x burners and flue gas recirculation. No data were available for uncontrolled NO_x emissions.

References for Section 2.4

1. "Criteria for Municipal Solid Waste Landfills," 40 CFR Part 258, Volume 56, No. 196, October 9, 1991.

2. *Air Emissions from Municipal Solid Waste Landfills - Background Information for Proposed Standards and Guidelines,* Office of Air Quality Planning and Standards, EPA-450/3-90-011a, Chapters 3 and 4, U. S. Environmental Protection Agency, Research Triangle Park, NC, March 1991.

3. *Characterization of Municipal Solid Waste in the United States: 1992 Update,* Office of Solid Waste, EPA-530-R-92-019, U. S. Environmental Protection Agency, Washington, DC, NTIS No. PB92-207-166, July 1992.

4. Eastern Research Group, Inc., *List of Municipal Solid Waste Landfills,* Prepared for the U. S. Environmental Protection Agency, Office of Solid Waste, Municipal and Industrial Solid Waste Division, Washington, DC, September 1992.

5. *Suggested Control Measures for Landfill Gas Emissions,* State of California Air Resources Board, Stationary Source Division, Sacramento, CA, August 1990.

6. "Standards of Performance for New Stationary Sources and Guidelines for Control of Existing Sources: Municipal Solid Waste Landfills; Proposed Rule, Guideline, and Notice of Public Hearing," 40 CFR Parts 51, 52, and 60, Vol. 56, No. 104, May 30, 1991.

7. S.W. Zison, Landfill Gas Production Curves: Myth Versus Reality, Pacific Energy, City of Commerce, CA, [Unpublished]

8. R.L. Peer, et al., Memorandum *Methodology Used to Revise the Model Inputs in the Municipal Solid Waste Landfills Input Data Bases (Revised),* to the Municipal Solid Waste Landfills Docket No. A-88-09, April 28, 1993.

9. A.R. Chowdhury, *Emissions from a Landfill Gas-Fired Turbine/Generator Set, Source Test Report C-84-33,* Los Angeles County Sanitation District, South Coast Air Quality Management District, June 28, 1984.

10. Engineering-Science, Inc., *Report of Stack Testing at County Sanitation District Los Angeles Puente Hills Landfill,* Los Angeles County Sanitation District, August 15, 1984.

11. J.R. Manker, *Vinyl Chloride (and Other Organic Compounds) Content of Landfill Gas Vented to an Inoperative Flare, Source Test Report 84-496,* David Price Company, South Coast Air Quality Management District, November 30, 1984.

12. S. Mainoff, *Landfill Gas Composition, Source Test Report 85-102,* Bradley Pit Landfill, South Coast Air Quality Management District, May 22, 1985.

13. J. Littman, *Vinyl Chloride and Other Selected Compounds Present in A Landfill Gas Collection System Prior to and after Flaring, Source Test Report 85-369,* Los Angeles County Sanitation District, South Coast Air Quality Management District, October 9, 1985.

14. W.A. Nakagawa, *Emissions from a Landfill Exhausting Through a Flare System, Source Test Report 85-461,* Operating Industries, South Coast Air Quality Management District, October 14, 1985.

15. S. Marinoff, *Emissions from a Landfill Gas Collection System, Source Test Report 85-511.* Sheldon Street Landfill, South Coast Air Quality Management District, December 9, 1985.

16. W.A. Nakagawa, *Vinyl Chloride and Other Selected Compounds Present in a Landfill Gas Collection System Prior to and after Flaring, Source Test Report 85-592,* Mission Canyon Landfill, Los Angeles County Sanitation District, South Coast Air Quality Management District, January 16, 1986.

17. California Air Resources Board, *Evaluation Test on a Landfill Gas-Fired Flare at the BKK Landfill Facility,* West Covina, CA, ARB-SS-87-09, July 1986.

18. S. Marinoff, *Gaseous Composition from a Landfill Gas Collection System and Flare, Source Test Report 86-0342,* Syufy Enterprises, South Coast Air Quality Management District, August 21, 1986.

19. *Analytical Laboratory Report for Source Test,* Azusa Land Reclamation, June 30, 1983, South Coast Air Quality Management District.

20. J.R. Manker, *Source Test Report C-84-202,* Bradley Pit Landfill, South Coast Air Quality Management District, May 25, 1984.

21. S. Marinoff, *Source Test Report 84-315*, Puente Hills Landfill, South Coast Air Quality Management District, February 6, 1985.

22. P.P. Chavez, *Source Test Report 84-596*, Bradley Pit Landfill, South Coast Air Quality Management District, March 11, 1985.

23. S. Marinoff, *Source Test Report 84-373*, Los Angeles By-Products, South Coast air Quality Management District, March 27, 1985.

24. J. Littman, *Source Test Report 85-403*, Palos Verdes Landfill, South Coast Air Quality Management District, September 25, 1985.

25. S. Marinoff, *Source Test Report 86-0234*, Pacific Lighting Energy Systems, South Coast Air Quality Management District, July 16, 1986.

26. South Coast Air Quality Management District, *Evaluation Test on a Landfill Gas-Fired Flare at the Los Angeles County Sanitation District's Puente Hills Landfill Facility*, [ARB/SS-87-06], Sacramento, CA, July 1986.

27. D.L. Campbell, et al., *Analysis of Factors Affecting Methane Gas Recovery from Six Landfills*, Air and Energy Engineering Research Laboratory, EPA-600/2-91-055, U. S. Environmental Protection Agency, Research Triangle Park, NC, September 1991.

28. Browning-Ferris Industries, Source Test Report, Lyon Development Landfill, August 21, 1990.

29. X.V. Via, *Source Test Report*, Browning-Ferris Industries, Azusa Landfill.

30. M. Nourot, *Gaseous Composition from a Landfill Gas Collection System and Flare Outlet*. Laidlaw Gas Recovery Systems, to J.R. Farmer, OAQPS:ESD, December 8, 1987.

31. D.A. Stringham and W.H. Wolfe, *Waste Management of North America, Inc.*, to J.R. Farmer, OAQPS:ESD, January 29, 1988, Response to Section 114 questionnaire.

32. V. Espinosa, *Source Test Report 87-0318*, Los Angeles County Sanitation District Calabasas Landfill, South Coast Air Quality Management District, December 16, 1987.

33. C.S. Bhatt, *Source Test Report 87-0329*, Los Angeles County Sanitation District, Scholl Canyon Landfill, South Coast Air Quality Management District, December 4, 1987.

34. V. Espinosa, *Source Test Report 87-0391*, Puente Hills Landfill, South Coast Air Quality Management District, February 5, 1988.

35. V. Espinosa, *Source Test Report 87-0376*, Palos Verdes Landfill, South Coast Air Quality Management District, February 9, 1987.

36. Bay Area Air Quality Management District, *Landfill Gas Characterization*, Oakland, CA, 1988.

37. Steiner Environmental, Inc., *Emission Testing at BFI's Arbor Hills Landfill, Northville, Michigan*, September 22 through 25, 1992, Bakersfield, CA, December 1992.

38. PEI Associates, Inc., *Emission Test Report - Performance Evaluation Landfill-Gas Enclosed Flare, Browning Ferris Industries*, Chicopee, MA, 1990.

39. Kleinfelder Inc., *Source Test Report Boiler and Flare Systems*, Prepared for Laidlaw Gas Recovery Systems, Coyote Canyon Landfill, Diamond Bar, CA, 1991.

40. Bay Area Air Quality Management District, *McGill Flare Destruction Efficiency Test Report for Landfill Gas at the Durham Road Landfill*, Oakland, CA, 1988.

41. San Diego Air Pollution Control District, *Solid Waste Assessment for Otay Valley/Annex Landfill.* San Diego, CA, December 1988.

42. PEI Associates, Inc., *Emission Test Report - Performance Evaluation Landfill Gas Enclosed Flare,* Rockingham, VT, September 1990.

43. Browning-Ferris Industries, *Gas Flare Emissions Source Test for Sunshine Canyon Landfill.* Sylmar, CA, 1991.

44. Scott Environmental Technology, *Methane and Nonmethane Organic Destruction Efficiency Tests of an Enclosed Landfill Gas Flare*, April 1992.

45. BCM Engineers, Planners, Scientists and Laboratory Services, *Air Pollution Emission Evaluation Report for Ground Flare at Browning Ferris Industries Greentree Landfill, Kersey, Pennsylvania.* Pittsburgh, PA, May 1992.

46. EnvironMETeo Services Inc., *Stack Emissions Test Report for Ameron Kapaa Quarry,* Waipahu, HI, January 1994.

47. Waukesha Pearce Industries, Inc., *Report of Emission Levels and Fuel Economies for Eight Waukesha 12V-AT25GL Units Located at the Johnston, Rhode Island Central Landfill,* Houston TX, July 19, 1991.

48. Mostardi-Platt Associates, Inc., *Gaseous Emission Study Performed for Waste Management of North America, Inc., CID Environmental Complex Gas Recovery Facility, August 8, 1989.* Chicago, IL, August 1989.

49. Mostardi-Platt Associates, Inc., *Gaseous Emission Study Performed for Waste Management of North America, Inc., at the CID Environmental Complex Gas Recovery Facility, July 12-14, 1989.* Chicago, IL, July 1989.

50. Browning-Ferris Gas Services, Inc., *Final Report for Emissions Compliance Testing of One Waukesha Engine Generator*, Chicopee, MA, February 1994.

51. Browning-Ferris Gas Services, Inc., *Final Report for Emissions Compliance Testing of Three Waukesha Engine Generators*, Richmond, VA, February 1994.

52. South Coast Environmental Company (SCEC), *Emission Factors for Landfill Gas Flares at the Arizona Street Landfill*, Prepared for the San Diego Air Pollution Control District, San Diego, CA, November 1992.

53. Carnot, *Emission Tests on the Puente Hills Energy from Landfill Gas (PERG) Facility - Unit 400, September 1993*, Prepared for County Sanitation Districts of Los Angeles County, Tustin, CA, November 1993.

54. Pape & Steiner Environmental Services, *Compliance Testing for Spadra Landfill Gas-to-Energy Plant, July 25 and 26, 1990*, Bakersfield, CA, November 1990.

55. AB2588 Source Test Report for Oxnard Landfill, July 23-27, 1990, by Petro Chem Environmental Services, Inc., for Pacific Energy Systems, Commerce, CA, October 1990.

56. AB2588 Source Test Report for Oxnard Landfill, October 16, 1990, by Petro Chem Environmental Services, Inc., for Pacific Energy Systems, Commerce, CA, November 1990.

57. Engineering Source Test Report for Oxnard Landfill, December 20, 1990, by Petro Chem Environmental Services, Inc., for Pacific Energy Systems, Commerce, CA, January 1991.

58. AB2588 Emissions Inventory Report for the Salinas Crazy Horse Canyon Landfill, Pacific Energy, Commerce, CA, October 1990.

59. Newby Island Plant 2 Site IC Engine's Emission Test, February 7-8, 1990, Laidlaw Gas Recovery Systems, Newark, CA, February 1990.

60. Landfill Methane Recovery Part II: Gas Characterization, Final Report, Gas Research Institute, December 1982.

61. Letter from J.D. Thornton, Minnesota Pollution Control Agency, to R. Myers, U.S. EPA, February 1, 1996.

62. Letter and attached documents from M. Sauers, GSF Energy, to S. Thorneloe, U.S. EPA, May 29, 1996.

63. Landfill Gas Particulate and Metals Concentration and Flow Rate, Mountaingate Landfill Gas Recovery Plant, Horizon Air Measurement Services, prepared for GSF Energy, Inc., May 1992.

64. Landfill Gas Engine Exhaust Emissions Test Report in Support of Modification to Existing IC Engine Permit at Bakersfield Landfill Unit #1, Pacific Energy Services, December 4, 1990.

65. Addendum to Source Test Report for Superior Engine #1 at Otay Landfill, Pacific Energy Services, April 2, 1991.

66. Source Test Report 88-0075 of Emissions from an Internal Combustion Engine Fueled by Landfill Gas, Penrose Landfill, Pacific Energy Lighting Systems, South Coast Air Quality Management District, February 24, 1988.

67. Source Test Report 88-0096 of Emissions from an Internal Combustion Engine Fueled by Landfill Gas, Toyon Canyon Landfill, Pacific Energy Lighting Systems, March 8, 1988.

68. Letter and attached documents from C. Nesbitt, Los Angeles County Sanitation Districts, to K. Brust, E.H. Pechan and Associates, Inc., December 6, 1996.

69. Determination of Landfill Gas Composition and Pollutant Emission Rates at Fresh Kills Landfill, revised Final Report, Radian Corporation, prepared for U.S. EPA, November 10, 1995.

70. Advanced Technology Systems, Inc., *Report on Determination of Enclosed Landfill Gas Flare Performance*, Prepared for Y & S Maintenance, Inc., February 1995.

71. Chester Environmental, *Report on Ground Flare Emissions Test Results*, Prepared for Seneca Landfill, Inc., October 1993.

72. Smith Environmental Technologies Corporation, *Compliance Emission Determination of the Enclosed Landfill Gas Flare and Leachate Treatment Process Vents*, Prepared for Clinton County Solid Waste Authority, April 1996.

73. AirRecon®, Division of RECON Environmental Corp., *Compliance Stack Test Report for the Landfill Gas FLare Inlet & Outlet at Bethlehem Landfill*, Prepared for LFG Specialties Inc., December 3, 1996.

74. ROJAC Environmental Services, Inc., *Compliance Test Report, Hartford Landfill Flare Emissions Test Program*, November 19, 1993.

75. Normandeau Associates, Inc., *Emissions Testing of a Landfill Gas Flare at Contra Costa Landfill, Antioch, California, March 22, 1994 and April 22, 1994*, May 17, 1994.

76. Roe, S.M., et. al., *Methodologies for Quantifying Pollution Prevention Benefits from Landfill Gas Control and Utilization*, Prepared for U.S. EPA, Office of Air and Radiation, Air and Energy Engineering Laboratory, EPA-600/R-95-089, July 1995.

2.5 Open Burning

2.5.1 General[1]

Open burning can be done in open drums or baskets, in fields and yards, and in large open dumps or pits. Materials commonly disposed of in this manner include municipal waste, auto body components, landscape refuse, agricultural field refuse, wood refuse, bulky industrial refuse, and leaves.

Current regulations prohibit open burning of hazardous waste. One exception is for open burning and detonation of explosives, particularly waste explosives that have the potential to detonate, and bulk military propellants which cannot safely be disposed of through other modes of treatment.

The following Source Classification Codes (SCCs) pertain to open burning:

Government

5-01-002-01	General Refuse
5-01-002-02	Vegetation Only

Commercial/Institutional

5-02-002-01	Wood
5-02-002-02	Refuse

Industrial

5-03-002-01	Wood/Vegetation/Leaves
5-03-002-02	Refuse
5-03-002-03	Auto Body Components
5-03-002-04	Coal Refuse Piles
5-03-002-05	Rocket Propellant

2.5.2 Emissions[1-22]

Ground-level open burning emissions are affected by many variables, including wind, ambient temperature, composition and moisture content of the debris burned, and compactness of the pile. In general, the relatively low temperatures associated with open burning increase emissions of particulate matter, carbon monoxide, and hydrocarbons and suppress emissions of nitrogen oxides. Emissions of sulfur oxides are a direct function of the sulfur content of the refuse.

2.5.2.1 Municipal Refuse -

Emission factors for the open burning of municipal refuse are presented in Table 2.5-1.

2.5.2.2 Automobile Components -

Emission factors for the open burning of automobile components including upholstery, belts, hoses, and tires are presented in Table 2.5-1.

Emission factors for the burning of scrap tires only are presented in Tables 2.5-2, 2.5-3, and 2.5-4. Although it is illegal in many states to dispose of tires using open burning, fires often occur at

Table 2.5-1 (Metric And English Units). EMISSION FACTORS FOR OPEN BURNING OF MUNICIPAL REFUSE

EMISSION FACTOR RATING: D

Source	Particulate	Sulfur Oxides	Carbon Monoxide	TOC[a]		Nitrogen Oxides
				Methane	Nonmethane	
Municipal Refuse[b]						
kg/Mg	8	0.5	42	6.5	15	3
lb/ton	16	1.0	85	13	30	6
Automobile Components[c]						
kg/Mg	50	Neg	62	5	16	2
lb/ton	100	Neg	125	10	32	4

[a] Data indicate that total organic compounds (TOC) emissions are approximately 25% methane, 8% other saturates, 18% olefins, 42% others (oxygenates, acetylene, aromatics, trace formaldehyde).
[b] References 2 and 7.
[c] Reference 2. Upholstery, belts, hoses, and tires burned together.

tire stockpiles and through illegal burning activities. If the emission factors presented here are used to estimate emissions from an accidental tire fire, it should be kept in mind that emissions from burning tires are generally dependent on the burn rate of the tire. A greater potential for emissions exists at lower burn rates, such as when a tire is smoldering, rather than burning out of control. In addition, the emission factors presented here for tire "chunks" are probably more appropriate than for "shredded" tires for estimating emissions from an accidental tire fire because there is likely to be more air-space between the tires in an actual fire. As discussed in Reference 21, it is difficult to estimate emissions from a large pile of tires based on these results, but emissions can be related to a mass burn rate. To use the information presented here, it may be helpful to use the following estimates: tires tested in Reference 21 weighed approximately 7 kilograms (kg) (15.4 pounds [lb]) and the volume of 1 tire is approximately 0.2 cubic meter (m^3) (7 cubic feet [ft^3]). Table 2.5-2 presents emission factors for particulate metals. Table 2.5-3 presents emission factors for polycyclic aromatic hydrocarbons (PAH), and Table 2.5-4 presents emissions for other volatile hydrocarbons. For more detailed information on this subject consult the reference cited at the end of this chapter.

2.5.2.3 Agricultural Waste -

Organic Agricultural Waste -

Organic refuse burning consists of burning field crops, wood, and leaves. Emissions from organic agricultural refuse burning are dependent mainly on the moisture content of the refuse and, in the case of the field crops, on whether the refuse is burned in a headfire or a backfire. Headfires are started at the upwind side of a field and allowed to progress in the direction of the wind, whereas backfires are started at the downwind edge and forced to progress in a direction opposing the wind.

Other variables such as fuel loading (how much refuse material is burned per unit of land area) and how the refuse is arranged (in piles, rows, or spread out) are also important in certain instances. Emission factors for open agricultural burning are presented in Table 2.5-5 as a function of refuse type and also, in certain instances, as a function of burning techniques and/or moisture content when these variables are known to significantly affect emissions. Table 2.5-5 also presents typical fuel loading values associated with each type of refuse. These values can be used, along with

Table 2.5-2 (Metric And English Units). PARTICULATE METALS EMISSION FACTORS FROM OPEN BURNING OF TIRES[a]

EMISSION FACTOR RATING: C

Tire Condition	Chunk[b]		Shredded[b]	
Pollutant	mg / kg tire	lb / 1000 tons tire	mg / kg tire	lb / 1000 tons tire
Aluminum	3.07	6.14	2.37	4.73
Antimony[c]	2.94	5.88	2.37	4.73
Arsenic[c]	0.05	0.10	0.20	0.40
Barium	1.46	2.92	1.18	2.35
Calcium	7.15	14.30	4.73	9.47
Chromium[c]	1.97	3.94	1.72	3.43
Copper	0.31	0.62	0.29	0.58
Iron	11.80	23.61	8.00	15.99
Lead[c]	0.34	0.67	0.10	0.20
Magnesium	1.04	2.07	0.75	1.49
Nickel[c]	2.37	4.74	1.08	2.15
Selenium[c]	0.06	0.13	0.20	0.40
Silicon	41.00	82.00	27.52	55.04
Sodium	7.68	15.36	5.82	11.63
Titanium	7.35	14.70	5.92	11.83
Vanadium	7.35	14.70	5.92	11.83
Zinc	44.96	89.92	24.75	49.51

[a] Reference 21.
[b] Values are weighted averages.
[c] Hazardous air pollutants listed in the *Clean Air Act*.

Table 2.5-3 (Metric And English). POLYCYCLIC AROMATIC HYDROCARBON EMISSION FACTORS FROM OPEN BURNING OF TIRES[a]

EMISSION FACTOR RATING: D

Tire Condition	Chunk[b,c]		Shredded[b,c]	
Pollutant	mg / kg tire	lb / 1000 tons tire	mg / kg tire	lb / 1000 tons tire
Acenaphthene	718.20	1436.40	2385.60	4771.20
Acenaphthylene	570.20	1140.40	568.08	1136.17
Anthracene	265.60	531.20	49.61	99.23
Benzo(A)pyrene	173.80	347.60	115.16	230.32
Benzo(B)fluoranthene	183.10	366.20	89.07	178.14
Benzo(G,H,I)perylene	36.20	72.40	160.84	321.68
Benzo(K)fluoranthene	281.80	563.60	100.24	200.48
Benz(A)anthracene	7.90	15.80	103.71	207.43
Chrysene	48.30	96.60	94.83	189.65
Dibenz(A,H)anthracene	54.50	109.00	0.00	0.00
Fluoranthene	42.30	84.60	463.35	926.69
Fluorene	43.40	86.80	189.49	378.98
Indeno(1,2,3-CD)pyrene	58.60	117.20	86.38	172.76
Naphthalene[d]	0.00	0.00	490.85	981.69
Phenanthrene	28.00	56.00	252.73	505.46
Pyrene	35.20	70.40	153.49	306.98

[a] Reference 21.
[b] 0.00 values indicate pollutant was not found.
[c] Values are weighted averages.
[d] Hazardous air pollutants listed in the *Clean Air Act*.

Table 2.5-4 (Metric And English Units). EMISSION FACTORS FOR ORGANIC COMPOUNDS FROM OPEN BURNING OF TIRES[a]

EMISSION FACTOR RATING: C

Tire Condition	Chunk[b,c]		Shredded[b,c]	
Pollutant	mg / kg tire	lb / 1000 tons tire	mg / kg tire	lb / 1000 tons tire
1,1'Biphenyl, methyl	12.71	25.42	0.00	0.00
1h Fluorene	191.27	382.54	315.18	630.37
1-Methyl naphthalene	299.20	598.39	227.87	455.73
2-Methyl naphthalene	321.47	642.93	437.06	874.12
Acenaphthalene	592.70	1185.39	549.32	1098.63
Benzaldehyde	223.34	446.68	322.05	644.10
Benzene[d]	1526.39	3052.79	1929.93	3859.86
Benzodiazine	13.12	26.23	17.43	34.87
Benzofuran	40.62	81.24	0.00	0.00
Benzothiophene	10.31	20.62	914.91	1829.82
Benzo(B)thiophene	50.37	100.74	0.00	0.00
Benzsisothiazole	0.00	0.00	151.66	303.33
Biphenyl[d]	190.08	380.16	329.65	659.29
Butadiene[d]	117.14	234.28	138.97	277.95
Cyanobenzene	203.81	407.62	509.34	1018.68
Cyclopentadiene	67.40	134.80	0.00	0.00

Table 2.5-4 (cont.).

Tire Condition	Chunk[b,c]		Shredded[b,c]	
Pollutant	mg / kg tire	lb / 1000 tons tire	mg / kg tire	lb / 1000 tons tire
Dihydroindene	9.82	19.64	30.77	61.53
Dimethyl benzene	323.58	647.16	940.91	1881.83
Dimethyl hexadiene	6.22	12.44	73.08	146.15
Dimethyl naphthalene	35.28	70.55	155.28	310.57
Dimethyldihydro indene	5.02	10.04	27.60	55.20
Ethenyl, dimethyl benzene	11.50	23.01	196.34	392.68
Ethenyl, methyl benzene	12.48	24.95	21.99	43.98
Ethenyl benzene[d]	539.72	1079.44	593.15	1186.31
Ethenyl cyclohexene	4.85	9.70	89.11	178.22
Ethenylmethyl benzene	103.13	206.26	234.59	469.19
Ethyenylmethyl benzene	0.00	0.00	42.04	84.07
Ethyl, methyl benzene	79.29	158.58	223.79	447.58
Ethyl benzene	138.94	277.87	335.12	670.24
Ethynyl, methyl benzene	459.31	918.62	345.25	690.50
Ethynyl benzene	259.82	519.64	193.49	386.98
Heptadiene	6.40	12.79	42.12	84.24
Hexahydro azepinone	64.35	128.69	764.03	1528.05

Table 2.5-4 (cont.).

Tire Condition	Chunk[b,c]		Shredded[b,c]	
Pollutant	mg / kg tire	lb / 1000 tons tire	mg / kg tire	lb / 1000 tons tire
Indene	472.74	945.48	346.23	692.47
Isocyano benzene	283.78	567.55	281.13	562.25
Isocyano naphthalene	10.75	21.51	0.00	0.00
Limonene	48.11	96.22	2309.57	4619.14
Methyl, ethenyl benzene	21.15	42.30	67.05	134.10
Methyl, methylethenyl benzene	35.57	71.13	393.78	787.56
Methyl, methylethyl benzene	109.69	219.39	1385.03	2770.07
Methyl benzaldehyde	0.00	0.00	75.49	150.98
Methyl benzene	1129.80	2259.60	1395.04	2790.08
Methyl cyclohexene	3.91	7.83	33.44	66.88
Methyl hexadiene	15.59	31.18	102.20	204.40
Methyl indene	50.04	100.07	286.68	573.36
Methyl, methylethyl benzene	11.76	23.52	114.33	228.66
Methyl naphthalene	144.78	289.56	122.68	245.37
Methyl, propyl benzene	0.00	0.00	30.14	60.28
Methyl thiophene	4.39	8.78	10.52	21.03
Methylene indene	30.37	60.75	58.91	117.82

Table 2.5-4 (cont.).

Tire Condition	Chunk[b,c]		Shredded[b,c]	
Pollutant	mg / kg tire	lb / 1000 tons tire	mg / kg tire	lb / 1000 tons tire
Methylethyl benzene	41.40	82.79	224.23	448.46
Phenol[d]	337.71	675.41	704.90	1409.80
Propenyl, methyl benzene	0.00	0.00	456.59	913.18
Propenyl naphthalene	26.80	53.59	0.00	0.00
Propyl benzene	19.43	38.87	215.13	430.26
Styrene[d]	618.77	1237.53	649.92	1299.84
Tetramethyl benzene	0.00	0.00	121.72	243.44
Thiophene	17.51	35.02	31.11	62.22
Trichlorofluoromethane	138.10	276.20	0.00	0.00
Trimethyl benzene	195.59	391.18	334.80	669.59
Trimethyl naphthalene	0.00	0.00	316.26	632.52

[a] Reference 21.
[b] 0.00 values indicate the pollutant was not found.
[c] Values are weight averages.
[d] Hazardous air pollutants listed in the *Clean Air Act*.

Table 2.5-5 (Metric And English Units). EMISSION FACTORS AND FUEL LOADING FACTORS FOR OPEN BURNING OF AGRICULTURAL MATERIALS[a]

EMISSION FACTOR RATING: D

Refuse Category	Particulate[b]		Carbon Monoxide		TOC[c] Methane		TOC[c] Nonmethane		Fuel Loading Factors (waste production)	
	kg/Mg	lb/ton	kg/Mg	lb/ton	kg/Mg	lb/ton	kg/Mg	lb/ton	Mg/hectare	ton/acre
Field Crops[d]										
Unspecified	11	21	58	117	2.7	5.4	9	18	4.5	2
Burning techniques not significant[e]										
Asparagus[f]	20	40	75	150	10	20	33	66	3.4	1.5
Barley	11	22	78	157	2.2	4.5	7.5	15	3.8	1.7
Corn	7	14	54	108	2	4	6	12	9.4	4.2
Cotton	4	8	88	176	0.7	1.4	2.5	5	3.8	1.7
Grasses	8	16	50	101	2.2	4.5	7.5	15		
Pineapple[g]	4	8	56	112	1	2	3	6		
Rice[h]	4	9	41	83	1.2	2.4	4	8	6.7	3.0
Safflower	9	18	72	144	3	6	10	20	2.9	1.3
Sorghum	9	18	38	77	1	2	3.5	7	6.5	2.9
Sugar cane[i]	2.3-3.5	6-8.4	30-41	60-81	0.6-2	1.2-3.8	2-6	4-12	8-46	3-17
Headfire Burning[j]										
Alfalfa	23	45	53	106	4.2	8.5	14	28	1.8	0.8
Bean (red)	22	43	93	186	5.5	11	18	36	5.6	2.5
Hay (wild)	16	32	70	139	2.5	5	8.5	17	2.2	1.0
Oats	22	44	68	137	4	7.8	13	26	3.6	1.6
Pea	16	31	74	147	4.5	9	15	29	5.6	2.5
Wheat	11	22	64	128	2	4	6.5	13	4.3	1.9

Table 2.5-5 (cont.).

Refuse Category	Particulate[b]		Carbon Monoxide		TOC[c] Methane		TOC[c] Nonmethane		Fuel Loading Factors (waste production)	
	kg/Mg	lb/ton	kg/Mg	lb/ton	kg/Mg	lb/ton	kg/Mg	lb/ton	Mg/hectare	ton/acre
Backfire Burning[k]										
Alfalfa	14	29	60	119	4.5	9	14	29	1.8	0.8
Bean (red)	7	14	72	148	3	6	10	19	5.6	2.5
Hay (wild)	8	17	75	150	2	4	6.5	13	2.2	1.0
Oats	11	21	68	136	2	4	7	14	3.6	1.6
Wheat	6	13	54	108	1.3	2.6	4.5	9	4.3	1.9
Vine Crops	3	5	26	51	0.8	1.7	3	5	5.6	2.5
Weeds										
Unspecified	8	15	42	85	1.5	3	4.5	9	7.2	3.2
Russian thistle (tumbleweed)	11	22	154	309	0.2	0.5	0.8	1.5	0.2	0.1
Tales (wild reeds)	3	5	17	34	3.2	6.5	10	21		
Orchard Crops[d,l,m]										
Unspecified	3	6	26	52	1.2	2.5	4	8	3.6	1.6
Almond	3	6	23	46	1	2	3	6	3.6	1.6
Apple	2	4	21	42	0.5	1	1.5	3	5.2	2.3
Apricot	3	6	24	49	1	2	3	6	4	1.8
Avocado	10	21	58	116	3.8	7.5	12	25	3.4	1.5
Cherry	4	8	22	44	1.2	2.5	4	8	2.2	1.0
Citrus (orange, lemon)	3	6	40	81	1.5	3	5	9	2.2	1.0
Date palm	5	10	28	56	0.8	1.7	3	5	2.2	1.0
Fig	4	7	28	57	1.2	2.5	4	8	4.9	2.2
Nectarine	2	4	16	33	0.5	1	1.5	3	4.5	2.0

Table 2.5-5 (cont.).

Refuse Category	Particulate[b]		Carbon Monoxide		TOC[c] Methane		TOC[c] Nonmethane		Fuel Loading Factors (waste production)	
	kg/Mg	lb/ton	kg/Mg	lb/ton	kg/Mg	lb/ton	kg/Mg	lb/ton	Mg/hectare	ton/acre
Orchard Crops[d,l,m]										
Olive	6	12	57	114	2	4	7	14	2.7	1.2
Peach	3	6	21	42	0.6	1.2	2	4	5.6	2.5
Pear	4	9	28	57	1	2	3.5	7	5.8	2.6
Prune	2	3	24	47	1	2	3	6	2.7	1.2
Walnut	3	6	24	47	1	2	3	6	2.7	1.2
Forest Residues[n]										
Unspecified	8	17	70	140	2.8	5.7	9	19	157	70
Hemlock, Douglas fir, cedar[p]	2	4	45	90	0.6	1.2	2	4	ND	ND
Ponderosa pine[q]	6	12	98	195	1.7	3.3	5.5	11	ND	ND

[a] Expressed as weight of pollutant emitted per weight of refuse material burned. ND = no data.
[b] Reference 12. Particulate matter from most agricultural refuse burning has been found to be in the submicrometer size range.
[c] Data indicate that total organic compound (TOC) emissions average 22% methane, 7.5% other saturates, 17% olefins, 15% acetylene, 38.5% unidentified. Unidentified TOCs are expected to include aldehydes, ketones, aromatics, cycloparaffins.
[d] References 12-13 for emission factors, Reference 14 for fuel loading factors.
[e] For these refuse materials, no significant difference exists between emissions from headfiring and backfiring.
[f] Factors represent emissions under typical high moisture conditions. If ferns are dried to < 15% moisture, particulate emissions will be reduced by 30%, CO emissions 23%, TOC emissions 74%.
[g] Reference 11. When pineapple is allowed to dry to <20% moisture, as it usually is, firing technique is not important. When headfired at 20% moisture, particulate emissions will increase to 11.5 kg/Mg (23 lb/ton) and TOCs will increase to 6.5 kg/Mg (13 lb/ton).
[h] Factors are for dry (15% moisture) rice straw. If rice straw is burned at higher moisture levels, particulate emissions will increase to 14.5 kg/Mg (29 lb/ton), CO emissions to 80.5 kg/Mg (181 lb/ton), and VOC emissions to 11.5 kg/Mg (23 lb/ton).
[i] Reference 20. See Section 8.12 for discussion of sugar cane burning. The following fuel loading factors are to be used in the corresponding states: Louisiana, 8 - 13.6 Mg/hectare (3 - 5 ton/acre); Florida, 11 - 19 Mg/hectare (4 - 7 ton/acre); Hawaii, 30 - 48 Mg/hectare (11 - 17 ton/acre). For other areas, values generally increase with length of growing season. Use larger end of the emission factor range for lower loading factors.

Table 2.5-5 (cont.).

[j] See text for definition of headfiring.
[k] See text for definition of backfiring. This category, for emission estimation purposes, includes another technique used occasionally to limit emissions, called into-the-wind striplighting, which is lighting fields in strips into the wind at 100 - 200 meter (300 - 600 feet) intervals.
[l] Orchard prunings are usually burned in piles. There are no significant differences in emissions between burning a "cold pile" and using a roll-on technique, where prunings are bulldozed onto the embers of a preceding fire.
[m] If orchard removal is the purpose of a burn, 66 Mg/hectare (30 ton/acre) of waste will be produced.
[n] Reference 10. NO_x emissions estimated at 2 kg/Mg (4 lb/ton).
[p] Reference 15.
[q] Reference 16.

the corresponding emission factors, to estimate emissions from certain categories of agricultural burning when the specific fuel loadings for a given area are not known.

Emissions from leaf burning are dependent upon the moisture content, density, and ignition location of the leaf piles. Increasing the moisture content of the leaves generally increases the amount of carbon monoxide, hydrocarbon, and particulate emissions. Carbon monoxide emissions decrease if moisture content is high but increase if moisture content is low. Increasing the density of the piles increases the amount of hydrocarbon and particulate emissions, but has a variable effect on carbon monoxide emissions.

The highest emissions from open burning of leaves occur when the base of the leaf pile is ignited. The lowest emissions generally arise from igniting a single spot on the top of the pile. Particulate, hydrocarbon, and carbon monoxide emissions from windrow ignition (piling the leaves into a long row and igniting one end, allowing it to burn toward the other end) are intermediate between top and bottom ignition. Emission factors for leaf burning are presented in Table 2.5-6. For more detailed information on this subject, the reader should consult the reference cited at the end of this section.

2.5.2.4 Agricultural Plastic Film -

Agricultural plastic film that has been used for ground moisture and weed control. Large quantities of plastic film are commonly disposed of when field crops are burned. The plastic film may also be gathered into large piles and burned separately or burned in an air curtain. Emissions from burning agricultural plastic are dependent on whether the film is new or has been exposed to exposed to vegetation and possibly pesticides. Table 2.5-7 presents emission factors for organic compounds emitted from burning new and used plastic film in piles or in piles where air has been forced through them to simulate combustion in an air curtain. Table 2.5-8 presents emission factors for PAHs emitted from open burning of inorganic plastic film.

Table 2.5-6 (Metric And English Units). EMISSION FACTORS FOR LEAF BURNING[a]

EMISSION FACTOR RATING: D

Leaf Species	Particulate[b]		Carbon Monoxide		TOC[c]			
					Methane		Nonmethane	
	kg/Mg	lb/ton	kg/Mg	lb/ton	kg/Mg	lb/ton	kg/Mg	lb/ton
Black Ash	18	36	63.5	127	5.5	11	13.5	27
Modesto Ash	16	32	81.5	163	5	10	12	24
White Ash	21.5	43	57	113	6.5	13	16	32
Catalpa	8.5	17	44.5	89	2.5	5	6.5	13
Horse Chestnut	27	54	73.5	147	8	17	20	40
Cottonwood	19	38	45	90	6	12	14	28
American Elm	13	26	59.5	119	4	8	9.5	19
Eucalyptus	18	36	45	90	5.5	11	13.5	27
Sweet Gum	16.5	33	70	140	5	10	12.5	25
Black Locust	35	70	65	130	11	22	26	52
Magnolia	6.5	13	27.5	55	2	4	5	10
Silver Maple	33	66	51	102	110	20	24.5	49
American Sycamore	7.5	15	57.5	115	2.5	5	5.5	11
California Sycamore	5	10	52	104	1.5	3	3.5	7
Tulip	10	20	38.5	77	3	6	7.5	15
Red Oak	46	92	68.5	137	14	28	34	69
Sugar Maple	26.5	53	54	108	8	16	20	40
Unspecified	19	38	56	112	6	12	14	28

[a] References 18-19. Factors are an arithmetic average of results obtained by burning high and low moisture content conical piles, ignited either at the top or around the periphery of the bottom. The windrow arrangement was only tested on Modesto Ash, Catalpa, American Elm, Sweet Gum, Silver Maple, and Tulip Poplar, and results are included in the averages for these species.

[b] The majority of particulate is submicrometer in size.

[c] Tests indicate that total organic compound (TOC) emissions average 29% methane, 11% other saturates, 33% olefins, 27% other (aromatics, acetylene, oxygenates).

Table 2.5-7 (Metric And English Units). EMISSION FACTORS FOR ORGANIC COMPOUNDS FROM BURNING PLASTIC FILM[a]

EMISSION FACTOR RATING: C

Pollutant	Units	Condition Of Plastic			
		Unused Plastic		Used Plastic	
		Pile[b]	Forced Air[c]	Pile[b]	Forced Air[c]
Benzene	mg/kg plastic	0.0478	0.0288	0.0123	0.0244
	lb/1000 tons plastic	0.0955	0.0575	0.0247	0.0488
Toluene	mg/kg plastic	0.0046	0.0081	0.0033	0.0124
	lb/1000 tons plastic	0.0092	0.0161	0.0066	0.0248
Ethyl benzene	mg/kg plastic	0.0006	0.0029	0.0012	0.0056
	lb/1000 tons plastic	0.0011	0.0058	0.0025	0.0111
1-Hexene	mg/kg plastic	0.0010	0.0148	0.0043	0.0220
	lb/1000 tons plastic	0.0020	0.0296	0.0086	0.0440

[a] Reference 22.
[b] Emission factors are for plastic gathered in a pile and burned.
[c] Emission factors are for plastic burned in a pile with a forced air current.

Table 2.5-8 (Metric And English Units). POLYCYCLIC AROMATIC HYDROCARBON EMISSION FACTORS FROM OPEN BURNING OF AGRICULTURAL PLASTIC FILM[a]

EMISSION FACTOR RATING: C

Pollutant	Units	Condition Of Plastic			
		Unused Plastic		Used Plastic	
		Pile[b]	Forced Air[c]	Pile[b]	Forced Air[c,d]
Anthracene	μg/kg plastic film	7.14	0.66	1.32	0.40
	lb/1000 tons plastic film	0.0143	0.0013	0.0026	0.0008
Benzo(A)pyrene	μg/kg plastic film	41.76	1.45	7.53	0.00
	lb/1000 tons plastic film	0.0835	0.0029	0.0151	0.0000
Benzo(B)fluoranthene	μg/kg plastic film	34.63	1.59	9.25	0.93
	lb/1000 tons plastic film	0.0693	0.0032	0.0185	0.0019
Benzo(e)pyrene	μg/kg plastic film	32.38	1.45	9.65	0.00
	lb/1000 tons plastic film	0.0648	0.0029	0.0193	0.0000
Benzo(G,H,I)perylene	μg/kg plastic film	49.43	2.11	14.93	0.00
	lb/1000 tons plastic film	0.0989	0.0042	0.0299	0.0000
Benzo(K)fluoranthene	μg/kg plastic film	13.74	0.66	2.51	0.00
	lb/1000 tons plastic film	0.0275	0.0013	0.0050	0.0000
Benz(A)anthracene	μg/kg plastic film	52.73	2.91	14.41	1.19
	lb/1000 tons plastic film	0.1055	0.0058	0.0288	0.0024
Chrysene	μg/kg plastic film	54.98	3.70	17.18	1.19
	lb/1000 tons plastic film	0.1100	0.0074	0.0344	0.0024

Table 2.5-8 (cont.).

Pollutant	Units	Condition Of Plastic			
		Unused Plastic		Used Plastic	
		Pile[b]	Forced Air[c]	Pile[b]	Forced Air[c,d]
Fluoranthene	μg/kg plastic film	313.08	53.39	107.05	39.12
	lb/1000 tons plastic film	0.6262	0.1068	0.2141	0.0782
Indeno(1,2,3-CD)pyrene	μg/kg plastic film	40.04	2.78	10.70	0.00
	lb/1000 tons plastic film	0.0801	0.0056	0.0214	0.0000
Phenanthrene	μg/kg plastic film	60.40	12.56	24.05	8.72
	lb/1000 tons plastic film	0.1208	0.0251	0.0481	0.0174
Pyrene	μg/kg plastic film	203.26	18.24	58.81	5.95
	lb/1000 tons plastic film	0.4065	0.0365	0.1176	0.0119
Retene	μg/kg plastic film	32.38	2.91	18.77	3.04
	lb/1000 tons plastic film	0.0648	0.0058	0.0375	0.0061

[a] Reference 22.
[b] Emission factors are for plastic gathered in a pile and burned.
[c] Emission factors are for plastic burned in a pile with a forced air current.
[d] 0.00 and 0.0000 values indicate pollutant was not found at that factor level.

References For Section 2.5

1. *Air Pollutant Emission Factors. Final Report*, National Air Pollution Control Administration, Durham, NC Contract Number CPA A-22-69-119, Resources Research, Inc., Reston, VA, April 1970.

2. R. W. Gerstle and D. A. Kemnitz, "Atmospheric Emissions From Open Burning", *Journal Of Air Pollution Control Association*, 12: 324-327, May 1967.

3. J. O. Burkle, *et al.*, *"The Effects Of Operating Variables And Refuse Types On Emissions From A Pilot-Scale Trench Incinerator"*, In: *Proceedings Of 1968 Incinerator Conference, American Society Of Mechanical Engineers*. New York. p.34-41, May 1968.

4. M. I. Weisburd and S. S. Griswold (eds.), *Air Pollution Control Field Operations Guide: A Guide For Inspection And Control*, PHS Publication No. 937, U. S. DHEW, PHS, Division Of Air Pollution, Washington, D.C., 1962.

5. Unpublished Data On Estimated Major Air Contaminant Emissions, State Of New York Department Of Health, Albany, NY, April 1, 1968.

6. E. F. Darley, *et al.*, "Contribution Of Burning Of Agricultural Wastes To Photochemical Air Pollution", *Journal Of Air Pollution Control Association*, 16: 685-690, December 1966.

7. M. Feldstein, *et al.*, "The Contribution Of The Open Burning Of Land Clearing Debris To Air Pollution", *Journal Of Air Pollution Control Association*, 13: 542-545, November 1963.

8. R. W. Boubel, *et al.*, "Emissions From Burning Grass Stubble And Straw", *Journal Of Air Pollution Control Association*, 19: 497-500, July 1969.

9. "Waste Problems Of Agriculture And Forestry", *Environmental Science And Technology*, 2:498, July 1968.

10. G. Yamate, *et al.*, "An Inventory Of Emissions From Forest Wildfires, Forest Managed Burns, And Agricultural Burns And Development Of Emission Factors For Estimating Atmospheric Emissions From Forest Fires", Presented At 68th Annual Meeting Air Pollution Control Association, Boston, MA, June 1975.

11. E. F. Darley, *Air Pollution Emissions From Burning Sugar Cane And Pineapple From Hawaii*, University Of California, Riverside, Calif. Prepared For Environmental Protection Agency, Research Triangle Park, N.C, as amendment of Research Grant No. R800711. August 1974.

12. E. F. Darley, *et al.*, *Air Pollution From Forest And Agricultural Burning. California Air Resources Board Project 2-017-1*, California Air Resources Board Project No. 2-017-1, University Of California, Davis, CA, April 1974.

13. E. F. Darley, Progress Report On Emissions From Agricultural Burning, California Air Resources Board Project 4-011, University Of California, Riverside, CA, Private communication with permission of Air Resources Board, June 1975.

14. Private communication on estimated waste production from agricultural burning activities. California Air Resources Board, Sacramento, CA. September 1975.

15. L. Fritschen, *et al.*, *Flash Fire Atmospheric Pollution*. U. S. Department of Agriculture, Washington, D.C., Service Research Paper PNW-97. 1970.

16. D. W. Sandberg, *et al.*, "Emissions From Slash Burning And The Influence Of Flame Retardant Chemicals". *Journal Of Air Pollution Control Association*, *25*:278, 1975.

17. L. G. Wayne And M. L. McQueary, *Calculation Of Emission Factors For Agricultural Burning Activities*, EPA-450-3-75-087, Environmental Protection Agency, Research Triangle Park, NC, Prepared Under Contract No. 68-02-1004, Task Order No. 4. By Pacific Environmental Services, Inc., Santa Monica, CA, November 1975.

18. E. F. Darley, *Emission Factor Development For Leaf Burning*, University of California, Riverside, CA, Prepared For Environmental Protection Agency, Research Triangle Park, NC, Under Purchase Order No. 5-02-6876-1, September 1976.

19. E. F. Darley, *Evaluation Of The Impact Of Leaf Burning — Phase I: Emission Factors For Illinois Leaves*, University Of California, Riverside, CA, Prepared For State of Illinois, Institute For Environmental Quality, August 1975.

20. J. H. Southerland and A. McBath. *Emission Factors And Field Loading For Sugar Cane Burning*, MDAD, OAQPS, U. S. Environmental Protection Agency, Research Triangle Park, NC, January 1978.

21. *Characterization Of Emissions From The Simulated Open Burning Of Scrap Tires*, EPA-600/2-89-054, U. S. Environmental Protection Agency, Research Triangle Park, NC, October 1989.

22. W. P. Linak, *et al.*, "Chemical And Biological Characterization Of Products Of Incomplete Combustion From The Simulated Field Burning Of Agricultural Plastic", *Journal Of Air Pollution Control Association*, *39*(6), EPA-600/J-89/025, U. S. Environmental Protection Agency Control Technology Center, June 1989.

2.6 Automobile Body Incineration

The information presented in this section has been reviewed but not updated since it was originally prepared because no recent data were found and it is rarely practiced today. Auto bodies are likely to be shredded or crushed and used as scrap metal in secondary metal production operations, which are discussed in Chapter 12 (Metallurgical Industry).

2.6.1 Process Description

Auto incinerators consist of a single primary combustion chamber in which one or several partially stripped cars are burned. (Tires are removed.) Approximately 30 to 40 minutes is required to burn two bodies simultaneously.[2] As many as 50 cars per day can be burned in this batch-type operation, depending on the capacity of the incinerator. Continuous operations in which cars are placed on a conveyor belt and passed through a tunnel-type incinerator have capacities of more than 50 cars per 8-hour day.

2.6.2 Emissions And Controls[1]

Both the degree of combustion as determined by the incinerator design and the amount of combustible material left on the car greatly affect emissions. Temperatures on the order of 650°C (1200°F) are reached during auto body incineration.[2] This relatively low combustion temperature is a result of the large incinerator volume needed to contain the bodies as compared with the small quantity of combustible material. The use of overfire air jets in the primary combustion chamber increases combustion efficiency by providing air and increased turbulence.

In an attempt to reduce the various air pollutants produced by this method of burning, some auto incinerators are equipped with emission control devices. Afterburners and low-voltage electrostatic precipators have been used to reduce particulate emissions; the former also reduces some of the gaseous emissions.[3,4] When afterburners are used to control emissions, the temperature in the secondary combustion chamber should be at least 815°C (1500°F). Lower temperatures result in higher emissions. Emission factors for auto body incinerators are presented in Table 2.6-1. Particulate matter is likely to be mostly in the PM-10 range, but no data are available to support this hypothesis. Although no data are available, emissions of HCl are expected due to the increased use of chlorinated plastic materials in automobiles.

Table 2.6-1 (English And Metric Units). EMISSION FACTORS FOR AUTO BODY INCINERATION[a]

EMISSION FACTOR RATING: D

Pollutants	Uncontrolled		With Afterburner	
	lb/car	kg/car	lb/car	kg/car
Particulates[b]	2	0.9	1.5	0.68
Carbon monoxide[c]	2.5	1.1	Neg	Neg
TOC (as CH_4)[c]	0.5	0.23	Neg	Neg
Nitrogen oxides (NO_2)[d]	0.1	0.05	0.02	0.01
Aldehydes (HCOH)[d]	0.2	0.09	0.06	0.03
Organic acids (acetic)[d]	0.21	0.10	0.07	0.03

[a] Based on 250 lb (113 kg) of combustible material on stripped car body.
[b] References 2 and 4.
[c] Based on data for open burning and References 2 and 5.
[d] Reference 3.

References For Section 2.6

1. *Air Pollutant Emission Factors Final Report*, National Air Pollution Control Administration, Durham, NC, Contract Number CPA-22-69-119, Resources Research Inc. Reston, VA, April 1970.

2. E. R. Kaiser and J. Tolcias, "Smokeless Burning Of Automobile Bodies", *Journal of the Air Pollution Control Association*, *12*:64-73, February 1962.

3. F. M. Alpiser, "Air Pollution From Disposal Of Junked Autos", *Air Engineering*, *10*:18-22, November 1968.

4. Private communication with D. F. Walters, U. S. DHEW, PHS, Division of Air Pollution, Cincinnati, OH, July 19, 1963.

5. R. W. Gerstle and D. A. Kemnitz, "Atmospheric Emissions From Open Burning", *Journal of the Air Pollution Control Association*, *17*:324-327. May 1967.

2.7 Conical Burners

The information presented in this section has not been updated since it was originally prepared because no recent data were found. The use of conical burners is much less prevalent now than in the past and they are essentially obsolete.

2.7.1 Process Description[1]

Conical burners are generally truncated metal cones with screened top vents. The charge is placed on a raised grate by either conveyor or bulldozer; however, the use of a conveyor results in more efficient burning. No supplemental fuel is used, but combustion air is often supplemented by underfire air blown into the chamber below the grate and by overfire air introduced through peripheral openings in the shell.

2.7.2 Emissions And Controls

The quantities and types of pollutants released from conical burners are dependent on the composition and moisture content of the charged material, control of combustion air, type of charging system used, and the condition in which the incinerator is maintained. The most critical of these factors seems to be the level of maintenance on the incinerators. It is not uncommon for conical burners to have missing doors and numerous holes in the shell, resulting in excessive combustion air, low temperatures, and, therefore, high emission rates of combustible pollutants.[2]

Particulate control systems have been adapted to conical burners with some success. These control systems include water curtains (wet caps) and water scrubbers. Emission factors for conical burners are shown in Table 2.7-1.

Table 2.7-1 (English And Metric Units). EMISSION FACTORS FOR WASTE INCINERATION IN CONICAL BURNERS WITHOUT CONTROLS[a]

EMISSION FACTOR RATING: D

Type of Waste	Particulates		Sulfur Oxides		Carbon Monoxide		NMOC		Nitrogen Oxides	
	lb/ton	kg/Mg	lb/ton	kg/Mg	lb/ton	kg/Mg	lb/ton	kg/Mg	lb/ton	kg/Mg
Municipal refuse[b]	20 (10 to 60)[c,d]	10	2	1	60	30	20	10	5	2.5
Wood refuse[e]	1[f] 7[g] 20[h]	0.5 3.5 10	0.1	0.05	130	65	11	5.5	1	0.5

[a] Moisture content as fired is approximately 50% for wood waste. Blanks indicate no data.
[b] Except for particulates, factors are based on comparison with other waste disposal practices.
[c] Use high side of range for intermittent operations charged with a bulldozer.
[d] Based on Reference 3.
[e] References 4-9.
[f] Satisfactory operation: properly maintained burner with adjustable underfire air supply and adjustable, tangential overfire air inlets, approximately 500% excess air, and 370°C (700°F) exit gas temperature.
[g] Unsatisfactory operation: properly maintained burner with radial overfire air supply near bottom of shell, approximately 1200% excess air, and 204°C (400°F) exit gas temperature.
[h] Very unsatisfactory operation: improperly maintained burner with radial overfire air supply near bottom of shell and many gaping holes in shell, approximately 1500% excess air and 204°C (400°F) exit gas temperature.

References For Section 2.7

1. *Air Pollutant Emission Factors*, Final Report, CPA-22-69-119, Resources Research Inc. Reston, VA. Prepared for National Air Pollution Control Administration, Durham, NC April 1970.

2. T. E. Kreichelt, *Air Pollution Aspects Of Teepee Burners*, U. S. DHEW, PHS, Division of Air Pollution. Cincinnati, Ohio. PHS Publication Number 999-AP-28. September 1966.

3. P. L. Magill and R. W. Benoliel, "Air Pollution In Los Angeles County: Contribution Of Industrial Products", *Ind. Eng. Chem*, *44*:1347-1352. June 1952.

4. Private communication with Public Health Service, Bureau of Solid Waste Management, Cincinnati, Ohio. October 31, 1969.

5. D. M. Anderson, *et al.*, *Pure Air For Pennsylvania*, Pennsylvania State Department of Health, Harrisburg PA, November 1961. p. 98.

6. R. W. Boubel, *et al.*, *Wood Waste Disposal And Utilization*. Engineering Experiment Station, Oregon State University, Corvallis, OR, Bulletin Number 39. June 1958. p.57.

7. A. B. Netzley and J. E. Williamson. *Multiple Chamber Incinerators For Burning Wood Waste, In: Air Pollution Engineering Manual*, Danielson, J. A. (ed.). U. S. DHEW, PHS, National Center for Air Pollution Control. Cincinnati, OH. PHS Publication Number 999-AP-40. 1967. p. 436-445.

8. H. Droege and G. Lee, The Use Of Gas Sampling And Analysis For The Evaluation Of Teepee Burners, Bureau Of Air Sanitation, California Department Of Public Health, (Presented At The 7th Conference On Methods In Air Pollution Studies, Los Angeles, CA, January 1965.)

9. R. W. Boubel, "Particulate Emissions From Sawmill Waste Burners", Engineering Experiment Station, Oregon State University, Corvallis, OR, Bulletin Number 42, August 1968, p. 7-8.

3. STATIONARY INTERNAL COMBUSTION SOURCES

Internal combustion engines often are used in applications similar to those associated with external combustion sources. The major items within this category are gas turbines and large heavy-duty general utility reciprocating engines. Most stationary internal combustion engines are used to generate electric power, to pump gas or other fluids, or to compress air for pneumatic machinery. The major pollutants of concern are total organic compounds and oxides of nitrogen. There also may be organic compounds that may be toxic or hazardous.

3.1 Stationary Gas Turbines For Electricity Generation

3.1.1 General[1]

A gas turbine is an internal combustion engine that operates with rotary rather than reciprocating motion. Gas turbines are used in a broad scope of applications including electric power generators, and in various process industries. Gas turbines are available with power outputs ranging in size from 300 horsepower (hp) to over 268,000 hp, with an average size of 40,200 hp.[2] Gas turbines greater than 4,021 hp that are used in electrical generation are used for continuous, peaking, or standby power. The primary fuels used are natural gas and distillate (No. 2) fuel oil.[3]

3.1.2 Process Description[1]

Gas turbines comprise three major components: compressor, combustor, and power turbine. Ambient air is drawn in and compressed up to 30 times ambient pressure and directed to the combustor section where fuel is introduced, ignited, and burned. Combustors can either be annular, can-annular, or silo. An annular combustor is a doughnut-shaped, single, continuous chamber that rings the turbine in a plane perpendicular to the air flow. Can-annular combustors are similar to the annular; however, they incorporate can-shaped chambers rather than a single continuous chamber. A silo combustor has one or more chambers mounted external to the gas turbine body.[2]

Hot combustion gases are diluted with additional air from the compressor section and directed to the turbine section at temperatures up to 2350°F. Energy from the hot, expanding exhaust gases are then recovered in the form of shaft horsepower, of which more than 50 percent is needed to drive the internal compressor and the balance of recovered shaft energy is available to drive the external load unit.[2]

The heat content of the gases exiting the turbine can either be discarded without heat recovery (simple cycle); used with a heat exchanger to preheat combustion air entering the combustor can (regenerative cycle); used with or without supplementary firing, in a heat recovery steam generator to raise process steam (cogeneration); or used with or without supplementary firing to raise steam for a steam turbine Rankine cycle (combined cycle or repowering).

Gas turbines may have one, two, or three shafts to transmit power from the inlet air compression turbine, the power turbine, and the exhaust turbine. Of the four basic turbine operating cycles (simple, regenerative, cogeneration, and combined cycles), three configurations (1, 2, or 3 shaft), and three types of combustors (annular, can-annular, and silo) for gas turbines, the majority of gas turbines used in large stationary installations are either peaking simple cycle two-shaft or base load combined cycle gas turbines.

If the heat recovery steam generator (HRSG) is not supplementary fuel fired, the simple cycle input-specific emission factors (pounds per million British thermal unit [lb/MMBtu]) will apply to cogeneration/combined cycle systems. The output-specific emissions (pounds per horsepower-hour [lb/hp-hr]) will decrease according to the ratio of simple cycle to combined cycle power output. If the HRSG is supplementary fired, the emissions and fuel usage must be considered to estimate stack emissions.

Gas turbines firing distillate oil may emit trace metals carried over from the metals content of the fuel. If the fuel analysis is known, the metals content of the fuel ash should be used for flue gas emission factors assuming all metals pass through the turbine.

3.1.3 Emissions

The primary pollutants from gas turbine engines are nitrogen oxides (NO_x) and carbon monoxide (CO). To a lesser extent, hydrocarbons (HC) and other organic compounds, and particulate matter (PM), which includes both visible (smoke) and nonvisible emissions are also emitted. Nitrogen oxide formation is strongly dependent on the high temperatures developed in the combustor. Smoke, CO, and HC, are primarily the result of incomplete combustion. Ash and metallic additives in the fuel may also contribute to the particulate loading in the exhaust. Oxides of sulfur (SO_x) will only appear in a significant quantity if heavy oils are fired in the turbine. Emissions of sulfur compounds, mainly sulfur dioxide (SO_2), are directly related to the sulfur content of the fuel.

3.1.3.1 Nitrogen Oxides -

Nitrogen oxides formation occurs by two fundamentally different mechanisms. The principal mechanism with turbines firing gas or distillate fuel is thermal NO_x, which arises from the thermal dissociation and subsequent reaction of nitrogen (N_2) and oxygen (O_2) molecules in the combustion air. Most thermal NO_x is formed in high temperature stoichiometric flame pockets downstream of the fuel injectors where combustion air has mixed sufficiently with the fuel to produce the peak temperature fuel/air interface. A component of thermal NO_x, called prompt NO_x, is formed from early reactions of nitrogen intermediaries and hydrocarbon radicals from the fuel. The prompt NO_x forms within the flame and is usually negligible compared to the amount of thermal NO_x formed. The second mechanism, fuel NO_x, stems from the evolution and reaction of fuel-bound nitrogen compounds with oxygen. Natural gas has negligible chemically-bound fuel nitrogen (although some molecular nitrogen is present). Essentially all NO_x formed is thermal NO_x. Distillate oils have low levels of fuel-bound nitrogen. These levels usually are significant only for high degrees of NO_x controls where thermal NO_x has been suppressed to the level where fuel NO_x is significant.

The maximum thermal NO_x production occurs at a slightly fuel-lean mixture because of excess oxygen available for reaction. The control of stoichiometry is critical in achieving reductions in thermal NO_x. The thermal NO_x generation also decreases rapidly as the temperature drops below the adiabatic temperature (for a given stoichiometry). Maximum reduction of thermal NO_x generation can thus be achieved by control of both the combustion temperature and the stoichiometry. Gas turbines operate with high overall levels of excess air, because turbines use combustion air dilution as the means to maintain the turbine inlet temperature below design limits. In older gas turbine models, where combustion is in the form of a diffusion flame, most of the dilution takes place in the can downstream of the primary flame, so that the high excess air levels are not indicative of the NO_x forming potential. The combustion in conventional can designs is by diffusion flames which are characterized by regions of near-stoichiometric fuel/air mixtures where temperatures are very high and the majority of NO_x is formed. Since the localized NO_x forming regions are at much higher temperatures than the adiabatic flame temperature for the overall mixture, the rate of NO_x formation is dependent on the fuel/air mixing process. The mixing determines the prevalence of the high temperature regions as well as the peak temperature attained. Also, operation at full loads gives higher temperatures in the peak NO_x forming regions. Newer model gas turbines use lean, pre-mixed combustion resulting in lower flame (hot spot) temperature and lower NO_x.

Ambient conditions also affect emissions and power output from turbines more than from external combustion systems. The operation at high excess air levels and at high pressures increases the influence of inlet humidity, temperature, and pressure.[4] Variations of emissions of 30 percent or greater have been exhibited with changes in ambient humidity and temperature. Humidity acts to absorb heat in the primary flame zone through the sensible heat and, if condensation occurs during compression, the latent heat of vaporization. For a given fuel firing rate, lower ambient temperatures lower the peak flame temperature, lowering NO_x significantly. Lower barometric pressure will also lower the temperature exiting the compressor turbine which will lower NO_x.

3.1.3.2 Carbon Monoxide and Total Organic Compounds (Hydrocarbons) -

Carbon monoxide and HC emissions both result from incomplete combustion. Carbon monoxide results when there is insufficient residence time at high temperature to complete the final step in HC oxidation. The oxidation of CO to CO_2 at gas turbine temperatures is a slow reaction compared to most HC oxidation reactions. In gas turbines, failure to achieve CO burnout may result from quenching in the can by the dilution air. With liquid fuels, this can be aggravated by carryover of larger droplets from the atomizer at the fuel injector. In gas turbines, CO emissions are usually higher when the unit is run at low loads.

The pollutants commonly classified as HCs can encompass a wide spectrum of volatile and semi-volatile organic compounds. They are discharged into the atmosphere when some of the fuel remains unburned or is only partially burned during the combustion process. With natural gas, some organics are carried over as unreacted, trace constituents of the gas, while others may be pyrolysis products of the heavier hydrocarbon constituents. With liquid fuels, large droplet carryover to the quench zone accounts for much of the unreacted and partially pyrolized organic emissions.

3.1.3.3 Particulate Matter -

Particulate emissions from turbines primarily result from carryover of noncombustible trace constituents in the fuel. Particulate are typically nondetectable with natural gas firing and marginally detectable with conventional sampling systems with distillate oil firing because of the low ash content. Particulate may also be formed from agglomerated soot particles, particularly from liquid fuel firing.

3.1.3.4 Greenhouse Gases - [5-11]

Carbon dioxide (CO_2), methane (CH_4), and nitrous oxide (N_2O) emissions are all produced during natural gas and distillate oil combustion in gas turbines. Nearly all of the fuel carbon is converted to CO_2 during the combustion process (typically 99.5 percent for gas and 99 percent for distillate oil). This conversion is relatively independent of firing configuration. Although the formation of CO acts to reduce CO_2 emissions, the amount of CO produced is insignificant compared to the amount of CO_2 produced. The majority of the fuel carbon not converted to CO_2 is due to incomplete combustion.

Formation of N_2O during the combustion process is governed by a complex series of reactions and its formation is dependent upon many factors. Formation of N_2O is minimized when combustion temperatures are kept high (above 1475°F) and excess air is kept to a minimum (less than 1 percent).

Methane emissions vary with the fuel, combustion temperature, and firing configuration, but are highest during periods of incomplete combustion or low-temperature combustion, such as during the start-up or shut-down cycle. Typically, conditions that favor formation of N_2O also favor emissions of CH_4.

3.1.4 Control Technologies[12]

There are three generic types of emission controls in use for gas turbines; wet controls using steam or water injection to reduce combustion temperatures for NO_x control; dry controls using advanced combustor design to suppress NO_x formation and/or promote CO burnout; and post-combustion catalytic control to selectively reduce NO_x and/or oxidize CO formed in the turbine.

3.1.4.1 Water Injection -

Water or steam injection is a mature technology that has been demonstrated as very effective in suppressing NO_x emissions from gas turbines. The effect of steam and water injection is to increase the thermal mass by dilution and thereby reduce the adiabatic flame temperature and the peak flame temperature in the NO_x forming regions. With water injection, there is additional benefit of absorbing the latent heat of vaporization from the flame zone. Water or steam is typically injected at a water-to-fuel weight ratio of less than one. Depending on the initial NO_x levels, such rates of injection may reduce NO_x by 60 percent or higher. Wet injection is usually accompanied by an efficiency penalty (typically 2 to 3 percent) but an increase in power output (typically 5 to 6 percent). The power increase results because fuel flow is increased to maintain turbine inlet temperature at manufacturer's specifications. Both CO and HC emissions are increased by large rates of water injection.

3.1.4.2 Dry Controls -

Since thermal NO_x is a function of both temperature (exponentially) and time (linearly), the bases of dry controls are to either lower the combustor temperature using lean mixtures of air and fuel and/or staging, or decrease the residence time of the combustor. A combination of methods may be used to reduce NO_x emissions such as; lean combustion; reduced combustor residence time; two stage lean/lean combustion; or two stage rich/lean combustion.

Most gas turbine combustors were originally designed to operate with a stoichiometric mixture (theoretical amount of air required to react with the fuel). Lean combustion involves increasing the air-to-fuel ratio of the mixture so that the peak and average temperature within the combustor will be less than that of the stoichiometric mixture. A lean mixture of air and fuel can be premixed before ignition, a stoichiometric mixture can be ignited and additional air can be introduced at a later stage (staging) creating an overall lean mixture in the turbine, or a combination of both can occur. Introducing excess air at a later stage not only creates a leaner mixture but it also can reduce the residence time of the combustor, given enough excess air is added at the later stage to create a mixture so lean that it will no longer combust. The residence time of a combustor can also be decreased by increasing the turbulence within the combustor.

Two-stage lean/lean combustors are essentially fuel-staged combustors in which each stage burns lean. The two-stage lean/lean combustor allows the turbine to operate with an extremely lean mixture and a stable flame that should not "blow off" or extinguish. A small stoichiometric pilot flame ignites the premixed gas and provides flame stability. The high NO_x emissions associated with the higher temperature pilot flame is minor side effect compared to the desirable low NO_x emissions generated by the extremely lean mixture.

Two stage rich/lean combustors are essentially air-staged combustors in which the primary zone is operated fuel rich and the secondary zone is operated fuel lean. The rich mixture will produce lower temperatures (compared to stoichiometric) and higher concentrations of CO and H_2 because of

incomplete combustion. The rich mixture decreases the amount of oxygen available for NO_x generation and the increased CO and H_2 concentrations help to reduce some of the NO_x formed. Before entering the secondary zone, the exhaust of the primary zone is quenched (to extinguish the flame) by large amounts of air and a lean mixture is created. The combustion of the lean mixture is then completed in the secondary zone.

3.1.4.3 Selective Catalytic Reduction Systems -

Selective catalytic reduction systems selectively reduce NO_x emissions by injecting ammonia (NH_3) into the exhaust gas stream upstream of a catalyst. Nitrogen oxides, NH_3, and O_2 react on the surface of the catalyst to form N_2 and H_2O. The exhaust gas must contain a minimum amount of O_2 and be within a particular temperature range (typically 450 to 850°F) in order for the SCR system to operate properly. The range is dictated by the catalyst, typically made from noble metals, base metal oxides such as vanadium and titanium, or zeolite-based material. Exhaust gas temperatures greater than the upper limit (850°F) will cause NO_x and NH_3 to pass through the catalyst unreacted. Ammonia emissions, called NH_3 slip, may be a consideration when specifying a SCR system.

Ammonia, either in the form of liquid anhydrous ammonia, or aqueous ammonia hydroxide is stored on site and injected into the exhaust stream upstream of the catalyst. Although a SCR system can operate alone, it is typically used in conjunction with water/steam injection systems to reduce NO_x emissions to their lowest levels (less than 10 ppm at 15 percent oxygen for SCR and wet injection systems).

The catalyst and catalyst housing used in SCR systems tend to be very large and dense (in terms of surface area to volume ratio) because of the high exhaust flow rates and long residence times required for NO_x, O_2, and NH_3, to react on the catalyst. Most catalysts are configured in a parallel-plate, "honeycomb" design to maximize the surface area-to-volume ratio of the catalyst. Some SCR installations are incorporating CO catalytic oxidation modules along with the NO_x reduction catalyst for simultaneous CO/NO_x control.

The average gaseous emission factors for uncontrolled gas turbines (firing natural gas and fuel oil) are presented in Table 3.1-1. There is some variation in emissions over the population of large uncontrolled gas turbines because of the diversity of engine designs, sizes, and models. Table 3.1-2 presents emission factors for gas turbines controlled with water injection, steam injection, and selective catalytic reduction. Emission factors for fuel oil-fired turbines controlled with water injection are given in Table 3.1-3. Table 3.1-4 presents trace element emission factors for distillate oil-fired turbines.

3.1.5 Updates Since the Fifth Edition

The Fifth Edition was released in January 1995. Revisions to this section since that date are summarized below. For further detail, consult the memoranda describing each supplement or the background report for this section. These and other documents can be found on the CHIEF electronic bulletin board (919-541-5742), or on the new EFIG home page (http://www.epa.gov/oar/oaqps/efig/).

Supplement A, February 1996

- For the PM factors, a footnote was added to clarify that condensables and all PM from oil- and gas-fired turbines are considered PM-10.
- In the table for large uncontrolled gas turbines, a sentence was added to footnote "e" to indicate that when sulfur content is not available, 0.6 $lb/10^6 ft^3$ (0.0006 lb/MMBtu) can be used.

Supplement B, October 1996

- Text was revised and updated for the general section.
- Text was added regarding firing practices and process description.
- Text was revised and updated for emissions and controls.
- All factors for turbines with SCR-water injection control were corrected.
- The CO_2 factor was revised and a new set of N_2O factors were added.

Table 3.1-1. EMISSION FACTORS FOR LARGE UNCONTROLLED GAS TURBINES[a]

Pollutant	EMISSION FACTOR RATING[b]	Natural Gas (SCC 2-01-002-01)		Fuel Oil (Distillate) (SCC 2-01-001-01)	
		Emission Factor[c] (lb/hp-hr) (power output)	Emission Factor (lb/MMBtu) (fuel input)	Emission Factor[c] (lb/hp-hr) (power output)	Emission Factor (lb/MMBtu) (fuel input)
NO_x	C	3.53 E-03	0.44	5.60 E-03	0.698
CO	D	8.60 E-04	0.11	3.84 E-04	0.048
CO_2[d]	B	0.876	109	1.32	165
TOC (as methane)	D	1.92 E-04	0.024	1.37 E-04	0.017
SO_x (as SO_2)[e]	B	7.52 E-03S	0.94S	8.09 E-03S	1.01S
PM-10					
Solids	E	1.54 E-04	0.0193	3.04 E-04	0.038
Condensables	E	1.81 E-04	0.0226	1.85 E-04	0.023
Sizing %					
<0.05 μm	D	15%	15%	16%	16%
<0.10 μm	D	40%	40%	48%	48%
<0.15 μm	D	63%	63%	72%	72%
<0.20 μm	D	78%	78%	85%	85%
<0.25 μm	D	89%	89%	93%	93%
<1 μm	D	100%	100%	100%	100%

[a] References 2-3,8-11,13-18. SCC = Source Classification Code. PM-10 = particulate matter less than or equal to 10 μm aerodynamic diameter; sizing % is expressed in μm. Condensables are also PM-10 and all PM from oil and gas-fired turbines is less than 1μm in size and therefore are considered PM-10. To convert lb/hp-hr to g/kw-hr, multiply by 608. To convert from lb/MMBtu to ng/J, multiply by 430.

[b] Ratings reflect limited data and/or a lack of documentation of test results; they may not apply to specific facilities or populations and should be used with care.

[c] Calculated from lb/MMBtu assuming an average heat rate of 8,000 Btu/hp-hr.

[d] Based on 99.5% conversion of fuel carbon to CO_2 for natural gas and 99% conversion for No. 2 oil.

[e] All sulfur in the fuel is assumed to be converted to SO_2. S = % sulfur in fuel. For example, if sulfur content in the fuel is 3.4%, then S = 3.4. When sulfur content is not available, 0.6 lb/10^6 ft^3 (0.0006 lb/MMBtu) can be used; however, the equation is more accurate.

Table 3.1-2. EMISSION FACTORS FOR LARGE CONTROLLED GAS TURBINES[a]
(SCC 2-01-002-01)

EMISSION FACTOR RATING: C

Pollutant	Water Injection (0.8 water/fuel ratio)		Steam Injection (1.2 water/fuel ratio)		Selective Catalytic Reduction (with water injection)
	Emission Factor (lb/hp-hr) (power output)	Emission Factor (lb/MMBtu) (fuel input)	Emission Factor (lb/hp-hr) (power output)	Emission Factor (lb/MMBtu) (fuel input)	Emission Factor (lb/MMBtu) (fuel input)
NO_x	1.10 E-03	0.14	9.75 E-04	0.12	0.0088[b]
CO	2.07 E-03	0.28	1.16 E-03	0.16	0.0084
N_2O[c]	2.00 E-05	0.003	2.00 E-05	0.003	ND
TOC (as methane)	ND	ND	ND	ND	0.014
NH_3	ND	ND	ND	ND	0.0065
NMHC	ND	ND	ND	ND	0.0032
Formaldehyde[d]	ND	ND	ND	ND	0.0027

[a] References 13,19-24. All data are averages of a limited number of tests and may not be typical of those reductions that can be achieved at a specific location. To convert from lb/hp-hr to g/kw-hr, multiply by 0.608. To convert from lb/MMBtu to ng/J, multiply by 430. NMHC = nonmethane hydrocarbons. ND = no data. SCC = Source Classification Code.
[b] An SCR catalyst reduces NO_x by an average of 78%.
[c] EMISSION FACTOR RATING: E. Based on limited source tests on a single turbine (Reference 5). Results may not be typical for all locations.
[d] Hazardous air pollutant listed in the *Clean Air Act*.

Table 3.1-3. EMISSION FACTORS FOR DISTILLATE OIL-FIRED TURBINES CONTROLLED WITH WATER INJECTION[a]
(SCC 2-01-001-01)

EMISSION FACTOR RATING: E

Pollutant	Water Injection (0.8 water/fuel ratio)	
	Emission Factor[b] (lb/hp-hr) (power output)	Emission Factor (lb/MMBtu) (fuel input)
NO_x	2.31 E-03	0.290
CO	1.54 E-04	0.0192
TOC (as methane)	3.84 E-05	0.0048
SO_x[c]	__[d]	__[d]
PM-10[e]	2.98 E-04	0.0372

[a] Reference 25. To convert from lb/hp-hr to g/kw-hr, multiply by 0.608. To convert from lb/MMBtu to ng/J, multiply by 430. PM-10 = particulate matter ≤ 10 μm aerometric diameter. SCC = Source Classification Code.
[b] Calculated from fuel input assuming an average heat rate of 8,000 Btu/hp-hr.
[c] EMISSION FACTOR RATING: B
[d] All sulfur in the fuel is assumed to be converted to SO_x.
[e] All PM is ≤ 1 μm in size.

Table 3.1-4. TRACE ELEMENT EMISSION FACTORS FOR DISTILLATE OIL-FIRED TURBINES[a]
(SCC 2-01-001-01)

EMISSION FACTOR RATING: E[b]

Trace Element	Emission Factor (lb/MMBtu)
Aluminum	1.5 E-04
Antimony[c]	2.2 E-05
Arsenic[c]	4.9 E-06
Barium	2.0 E-05
Beryllium[c]	3.3 E-07
Boron	6.5 E-05
Bromine	4.2 E-06
Cadmium[c]	4.2 E-06
Calcium	7.7 E-04
Chromium[c]	4.7 E-05
Cobalt[c]	9.1 E-06
Copper	1.3 E-03
Iron	6.0 E-04
Lead[c]	5.8 E-05
Magnesium	2.3 E-04
Manganese[c]	3.4 E-04
Mercury[c]	9.1 E-07
Molybdenum	8.4 E-06
Nickel[c]	1.2 E-03
Phosphorus[c]	3.0 E-04
Potassium	4.3 E-04
Selenium[c]	5.3 E-06
Silicon	1.3 E-03
Sodium	1.4 E-03
Tin	8.1 E-05
Vanadium	4.4 E-06
Zinc	6.8 E-04

[a] Reference 2. To convert from lb/MMBtu to ng/J, multiply by 430. SCC = Source Classification Code.
[b] Ratings reflect limited data; they may not apply to specific facilities or populations and should be used with care.
[c] Hazardous air pollutant listed in the *Clean Air Act*.

References For Section 3.1

1. *Alternative Control Techniques Document - NO_x Emissions from Stationary Gas Turbines*, EPA 453/R-93-007, January 1993.

2. C. C. Shih, *et al.*, *Emissions Assessment Of Conventional Stationary Combustion Systems, Vol. II: Internal Combustion Sources*, EPA-600/7-79-029c, U. S. Environmental Protection Agency, Cincinnati, OH, February 1979.

3. *Final Report - Gas Turbine Emission Measurement Program*, GASLTR787, General Applied Science Laboratories, Westbury, NY, August 1974.

4. *Standards Support And Environmental Impact Statement, Volume 1: Proposed Standards Of Performance For Stationary Gas Turbines*, EPA-450/2-77-017a, U. S. Environmental Protection Agency, Research Triangle Park, NC, September 1977.

5. L. P. Nelson, *et al.*, *Global Combustion Sources Of Nitrous Oxide Emissions*, Research Project 2333-4 Interim Report, Sacramento: Radian Corporation, 1991.

6. R. L. Peer, *et al.*, *Characterization Of Nitrous Oxide Emission Sources*, U. S. Environmental Protection Agency, Office of Research and Development, Research Triangle Park, NC, 1995.

7. S. D. Piccot, *et al.*, *Emissions And Cost Estimates For Globally Significant Anthropogenic Combustion Sources Of NO_x, N_2O, CH_4, CO, And CO_2*, U. S. Environmental Protection Agency, Office of Research and Development, Research Triangle Park, NC, 1990.

8. G. Marland and R. M. Rotty, *Carbon Dioxide Emissions From Fossil Fuels: A Procedure For Estimation And Results For 1951-1981*, DOE/NBB-0036 TR-003, Carbon Dioxide Research Division, Office of Energy Research, U. S. Department of Energy, Oak Ridge, TN, 1983.

9. G. Marland and R. M. Rotty, *Carbon Dioxide Emissions From Fossil Fuels: A Procedure For Estimation And Results For 1950-1982*, Tellus 36B:232-261, 1984.

10. *Inventory Of U. S. Greenhouse Gas Emissions And Sinks: 1990-1991*, EPA-230-R-96-006, U. S. Environmental Protection Agency, Washington, DC, November 1995.

11. *IPCC Guidelines For National Greenhouse Gas Inventories Workbook*, Intergovernmental Panel on Climate Change/Organization for Economic Cooperation and Development, Paris, France, 1995.

12. L. M. Campbell and G. S. Shareef, *Sourcebook: NO_x Control Technology Data*, Radian Corp., EPA-600/2-91-029, Air and Energy Engineering Research Laboratory, U. S. Environmental Protection Agency, Research Triangle Park, July 1991.

13. P. C. Malte, *et al.*, *NO_x Exhaust Emissions For Gas-Fired Turbine Engines*, ASME 90-GT-392, The American Society Of Mechanical Engineers, Bellevue, WA, June 1990.

14. C. T. Hare and K. J. Springer, *Exhaust Emissions From Uncontrolled Vehicles And Related Equipment Using Internal Combustion Engines, Part 6: Gas Turbines, Electric Utility Power Plant*, APTD-1495, U. S. Environmental Protection Agency, Research Triangle Park, NC, February 1974.

15. M. Lieferstein, *Summary Of Emissions From Consolidated Edison Gas Turbine*, Department Of Air Resources, City Of New York, NY, November 5, 1975.

16. J. F. Hurley and S. Hersh, *Effect Of Smoke And Corrosion Suppressant Additives On Particulate And Gaseous Emissions From Utility Gas Turbine*, EPRI FP-398, Electric Power Research Institute, Palo Alto, CA, March 1977.

17. A. R. Crawford, *et al.*, "The Effect Of Combustion Modification On Pollutants And Equipment Performance Of Power Generation Equipment", In *Proceedings Of The Stationary Source Combustion Symposium, Vol. III: Field Testing And Surveys*, EPA-600/2-76-152c, U. S. Environmental Protection Agency, Cincinnati, OH, June 1976.

18. D. E. Carl, *et al.*, "Exhaust Emissions From A 25-MW Gas Turbine Firing Heavy And Light Distillate Fuel Oils And Natural Gas", presented at the Gas Turbine Conference And Products Show, Houston, TX, March 2-6, 1975.

19. G. S. Shareef and D. K. Stone, *Evaluation Of SCR NO_x Controls For Small Natural Gas-fueled Prime Movers - Phase I*, GRI-90/0138, Gas Research Institute, Chicago, IL, July 1990.

20. R. R. Pease, *SCAQMD Engineering Division Report - Status Report On SCR For Gas Turbines*, South Coast Air Quality Management District, Diamond Bar, CA, July 1984.

21. *CEMS Certification And Compliance Testing At Chevron USA, Inc.'s Gaviota Gas Plant*, Report PS-89-1837, Chevron USA, Inc., Goleta, CA, June 21, 1989.

22. *Emission Testing At The Bonneville Pacific Cogeneration Plant*, Report PS-92-2702, Bonneville Pacific Corporation, Santa Maria, CA, March 1992.

23. Compliance test report on a production gas-fired IC engine, ESA, 19770-462, Procter And Gamble, Sacramento, CA, December 1986.

24. Compliance test report on a cogeneration facility, CR 75600-2160, Procter And Gamble, Sacramento, CA, May 1990.

25. R. Larkin and E. B. Higginbotham, *Combustion Modification Controls For Stationary Gas Turbines, Vol. II: Utility Unit Field Test*, EPA 600/7-81-122, U. S. Environmental Protection Agency, Cincinnati, OH, July 1981.

3.2 Heavy-duty Natural Gas-fired Pipeline Compressor Engines And Turbines

3.2.1 General[1-3]

Natural gas-fired internal combustion engines are used in the natural gas industry at pipeline compressor and storage stations. The engines and gas turbines are used to provide mechanical shaft power that drives compressors. At pipeline compressor stations, the engine or turbine is used to help move natural gas from station to station. At storage facilities, they are used to help inject the natural gas into high pressure underground cavities (natural gas storage fields), e. g., empty oil fields. Although they can operate at a fairly constant load, pipeline engines or turbines must be able to operate under varying pipeline requirements. The size of these engines ranges from 800 brake horsepower (bhp) to 5,000 bhp. For gas turbines, the capacity ranges from 1,000 to 15,000 bhp.

3.2.2 Process Description[1-3]

Reciprocating engines are separated into 3 design classes: 2-cycle (stroke) lean burn, 2-stroke ultra lean (clean) burn, 4-stroke lean burn, 4-stroke clean burn, and 4-stroke rich burn. Each of these have design differences that affect both baseline emissions as well as the potential for emissions control. Two-stroke engines complete the power cycle in a single crankshaft revolution as compared to the two crankshaft revolutions required for 4-stroke engines.

In a 2-stroke engine, the air/fuel charge is injected with the piston near the bottom of the power stroke. The intake ports are then covered or closed, and the piston moves to the top of the cylinder, thereby compressing the charge. Following ignition and combustion, the power stroke starts with the downward movement of the piston. Exhaust ports or valves are then uncovered to exhaust the combustion products, and a new air/fuel charge is injected. Two-stroke engines may be turbocharged using an exhaust-powered turbine to pressurize the charge for injection into the cylinder and to increase cylinder scavenging. Non-turbocharged engines may be either blower scavenged or piston scavenged to improve removal of combustion products.

Four-stroke engines use a separate engine revolution for the intake/compression cycle and the power/exhaust cycle. These engines may be either naturally aspirated, using the suction from the piston to entrain the air charge, or turbocharged, using an exhaust-driven turbine to pressurize the charge. Turbocharged units produce a higher power output for a given engine displacement, whereas naturally aspirated units have lower initial cost and maintenance. Rich burn engines operate near the stoichiometric air/fuel ratio with exhaust excess oxygen levels less than 4 percent. Lean burn engines may operate up to the lean flame extinction limit, with exhaust oxygen levels of 12 percent or greater. Pipeline population statistics show a nearly equal installed capacity of turbines and reciprocating engines. For reciprocating engines, 2-stroke designs contribute approximately two-thirds of installed capacity.

Almost all of the gas turbines used by the natural gas industry for pipeline and storage facilities are simple cycle. A gas turbine is an internal combustion engine that operates with rotary rather than reciprocating motion. Gas turbines are essentially composed of several major components: compressor, combustor, and power turbine. Natural gas and compressed air (up to 30 atmospheres pressure) are injected separately into the combustor can, mixed, and reacted.

The hot expanding exhaust gases are then passed into the power turbine to produce usable shaft energy. The heat content of the exhaust gases exiting the turbine are not commonly utilized with pipeline

applications, although other applications use heat recovery steam generators for cogeneration or combined cycle application.

Gas turbines may have one, two, or three shafts to transmit power from the inlet air compression turbine, the power turbine, and the exhaust turbine. The majority of gas turbines used in pipeline installations are simple cycle two-shaft gas turbines. There are three types of combustor can design in use: annular, can-annular, and silo. The type of combustor can design depends on the make/model of the gas turbine. Several stationary engine designs are aircraft-derivative using an annular or can-annular design.

3.2.3 Emissions

The primary pollutants from natural gas-fueled reciprocating engines and gas turbines are nitrogen oxide (NO_x), carbon monoxide (CO), and total organic compounds (TOC). Nitrogen oxide formation is strongly dependent on the high temperatures developed in the cylinder or combustor can. The other pollutants, CO and HC species, are primarily the result of incomplete combustion. Trace amounts of metals and non-combustible inorganic material may be carried over from the lubricating oil, from engine wear, or from trace constituents in the gas. Sulfur oxides are very low since sulfur compounds are removed in the gas treatment plant prior to entry into the pipeline.

3.2.3.1 Nitrogen Oxides -

Nitrogen oxide formation occurs by two fundamentally different mechanisms. The principle mechanism with gas-fired engines and turbines is thermal NO_x, which arises from the thermal dissociation and subsequent reaction of nitrogen (N_2) and oxygen (O_2) molecules in the combustion air. Most thermal NO_x is formed in high-temperature regions in the cylinder or combustor can where combustion air has mixed sufficiently with the fuel to produce the peak temperature fuel/air interface. A component of thermal NO_x, called prompt NO_x, is formed from early reactions of nitrogen intermediaries and hydrocarbon radicals from the fuel. The prompt NO_x forms within the flame and is usually negligible compared to the amount of thermal NO_x formed. The second mechanism, fuel NO_x, stems from the evolution and reaction of fuel-bound N_2 compounds with oxygen. Natural gas has negligible chemically bound fuel N_2 (although some molecular nitrogen) and essentially all NO_x formed is thermal NO_x. The formation of prompt NO_x can form a significant part of total NO_x only under highly controlled situations where thermal NO_x is suppressed. It is more prevalent with rich burn engines. The rates of these reactions are highly dependent upon the stoichiometric ratio, combustion temperature, and residence time at the combustion temperature.

The maximum thermal NO_x production occurs at a slightly lean fuel/air mixture ratio because of the excess availability of oxygen for reaction. The control of stoichiometry is critical in achieving reductions in thermal NO_x. Premixing with lean burn reciprocating engines is effective in suppressing NO_x relative to rich burn engines. The thermal NO_x generation decreases rapidly as the temperature drops below the adiabatic temperature. Thus, maximum reduction of thermal NO_x generation can be achieved by control of both the combustion temperature and the stoichiometry.

Gas turbines operate with high overall levels of excess air because turbines use combustion air dilution as the means to maintain the turbine inlet temperature below design limits. Most of the dilution takes place in the can downstream of the primary flame, so that high excess air levels are not indicative of the NO_x-forming potential. The combustion in conventional designs is by diffusion flames that are characterized by regions of near-stoichiometric fuel/air mixtures where temperatures are very high and the majority of NO_x is formed. Since the localized NO_x-forming regions are at much higher temperatures than the adiabatic flame temperature for the overall mixture, the rate of NO_x formation is dependent on

the fuel/air mixing process. The mixing determines the prevalence of the high temperature regions as well as the peak temperature attained.

3.2.3.2 Carbon Monoxide and Total Organic Compounds (Hydrocarbons) -

Carbon monoxide and hydrocarbon emissions both result from the products of incomplete combustion. Carbon monoxide results when there is insufficient residence time at high temperature to complete the final step in hydrocarbon oxidation. In reciprocating engines, CO emissions may indicate early quenching of combustion gases on cylinder walls or valve surfaces. The oxidation of CO to carbon dioxide (CO_2) is a slow reaction compared to most hydrocarbon oxidation reactions. In gas turbines, failure to achieve CO burnout may result from quenching in the can by the dilution air. CO emissions are usually higher when the unit is run at low loads.

The pollutants commonly classified as hydrocarbons can encompass a wide spectrum of volatile and semi-volatile organic compounds. They are discharged into the atmosphere when some of the gas remains unburned or is only partially burned during the combustion process. With natural gas, some organics are carryover, unreacted, trace constituents of the gas, while others may be pyrolysis products of the heavier hydrocarbon constituents. Partially burned hydrocarbons can occur because of poor air/fuel homogeneity due to incomplete mixing prior to, or during, combustion; incorrect air/fuel ratios in the cylinder during combustion due to maladjustment of the engine fuel system; or low cylinder temperature due to excessive cooling through the walls or early cooling of the gases by expansion of the combustion volume caused by piston motion before combustion is completed.

3.2.3.3 Particulate Matter and PM-10[4] -

Particulate emissions with gas-fired turbines and reciprocating engines are non-detectable with conventional protocols unless the engines are operated in a sooting condition. Otherwise, particulate could arise from carryover of non-combustible trace constituents in the gas or from lube oil.

3.2.4 Control Technologies

Three generic control techniques have been developed for reciprocating engines and gas turbines: parametric controls (timing and operating at a leaner air/fuel ratio for reciprocating engines and water injection for gas turbines); combustion modification such as advanced engine design for new sources or major modification to existing sources (clean burn reciprocating head designs and dry gas turbine combustor can designs); and postcombustion catalytic NO_x reduction (selective catalytic reduction [SCR] for gas turbines and lean burn reciprocating engines and nonselective catalytic reduction [NSCR] for rich burn engines).

3.2.4.1 Control Techniques for Rich Burn Reciprocating Engines[5] -

Nonselective Catalytic Reduction -

This technique uses the residual hydrocarbons and CO in the rich burn engine exhaust as a reducing agent for NO_x. In NSCR, hydrocarbons will be oxidized by O_2 and NO_x, hence the designation "nonselective". This is in contrast to ammonia injection for SCR where ammonia selectively reacts with NO_x. The excess hydrocarbons and NO_x pass over a catalyst, usually a noble metal (platinum, rhodium, or palladium) which reduces the reactants to N_2, CO_2, and H_2O.

The NSCR technique is effectively limited to engines with normal exhaust oxygen levels of 4 percent or less. This includes 4-cycle naturally aspirated engines and some 4-cycle turbocharged engines. Engines operating with NSCR require tight air/fuel control to maintain high reduction effectiveness without high hydrocarbon emissions. To achieve optimum NO_x reduction performance, the engine may need to be run in a richer fuel condition than normal.

Prestratified Charge -

Prestratified charge combustion is a retrofit system that is limited to 4-cycle carbureted natural gas engines. In this system, controlled amounts of air are introduced into the intake manifold in a specified sequence and quantity. This stratification provides both a fuel rich ignition and rapid flame cooling resulting in reduced formation of NO_x.

3.2.4.2 Control Techniques for Lean Burn Reciprocating Engines -

Lean Combustion -

Lean combustion techniques use increased bulk air/fuel ratios to lower peak flame temperature and reduce NO_x formation. Typically, air/fuel ratios are increased from normal levels of 20 to 35 up to controlled levels of 45 to 50. The upper limit is constrained by the onset of misfiring at the lean limit. This condition also increases CO and HC emissions.

To maintain acceptable engine performance at lean conditions, high energy ignition systems have been developed that promote flame stability at very lean conditions. With high energy ignition, a rich mixture is ignited in a small ignition cell located in the cylinder head. The ignition cell flame passes to the cylinder where it provides a uniform ignition source. The technique can be retrofit to existing turbocharged 2- and 4-cycle engines. With new engine designs, NO_x reductions of 80 to 90 percent have been achieved compared to spark ignition designs. In most cases, the NO_x reductions have been accompanied by increases in power output and increased fuel economy.

Selective Catalytic Reduction -

Selective catalytic reduction (SCR) is applicable to lean burn engines. Ammonia (NH_3) is injected upstream of a noble metal, metal oxide or zeolite catalyst to give an NH_3: NO_x ratio of about 1:1. The mixture of NH_3 and NO_x is selectively reduced over the catalyst within a temperature range of 600 to 900°F depending on the catalyst. The major system components are the catalyst and associated housing, the ammonia storage and delivery system, and the control system. The performance has been less acceptable than NSCR with rich burn engines, or SCR with gas turbines. The primary difficulty with lean burn engines has been maintaining air/fuel control, very limited automatic controls, and engine performance and the inherent variety of engine loading while achieving the necessary exhaust temperature window for efficient SCR operation.

3.2.4.3 Control Technologies for Gas Turbines -

Water Injection -

Water or steam injection is a technology that has been demonstrated as very effective in suppressing NO_x emissions from gas turbines. The effect of steam and water injection is to increase the thermal mass by dilution and thereby reduce the adiabatic flame temperature and the peak flame temperatures in the NO_x-forming regions. With water injection, there is the additional benefit of absorbing the latent heat of vaporization from the flame zone. Water or steam is typically injected at a water-to-fuel weight ratio of less than 1. Depending on the initial NO_x levels, such rates of injection may reduce NO_x by 60 percent or higher. Wet injection is usually accompanied by an efficiency penalty but an increase in power output. Efficiency penalties of 2 to 3 percent are typical. The power increase results because fuel flow is increased to maintain turbine inlet temperature at manufacturers' specifications. Power increases with water or steam injection of 5 to 6 percent are typical. Both CO and HC emissions are increased by large rates of water injection.

The use of wet injection may be constrained in some applications such as pipeline pumping by the unavailability of pure water for injection. The choice between water or steam is usually driven by the availability of steam. Most operators prefer steam because of fewer operational problems, better heat

rate, and increased power augmentation compared to water. The use of water with low mineral content is a significant cost item with water injection. The reliability of the water treatment system and injection pumps also can be a major issue in continuous operation under low NO_x conditions.

Selective Catalytic Reduction Systems -

Selective catalytic reduction systems are postcombustion technologies that have recently been applied in limited cases to gas turbines. An SCR system consists of an ammonia storage, feed, and injection system, and a catalyst and catalyst housing. Selective catalytic reduction systems selectively reduce NO_x emissions by injecting NH_3 into the exhaust gas stream upstream of the catalyst. Nitrogen oxides, NH_3, and O_2 react on the surface of the catalyst to form N_2 and H_2O. For the SCR system to operate properly, the exhaust gas must be within a particular temperature range (typically between 450 and 850°F). The temperature range is dictated by the catalyst (typically made from noble metals, base metal oxides such as vanadium and titanium, and zeolite-based material). Exhaust gas temperatures greater than the upper limit (850°F) will pass the NO_x and ammonia unreacted through the catalyst. Ammonia emissions, called NH_3 slip, are a key consideration when specifying a SCR system. Ammonia, either in the form of liquid anhydrous ammonia, or aqueous ammonia hydroxide is stored on site and injected into the exhaust stream upstream of the catalyst. Although an SCR system can operate alone, it is typically used in conjunction with water/steam injection systems to reduce NO_x emissions to their lowest levels (less than 10 ppm at 15 percent oxygen).

Combustion Modifications -

Several different methods or approaches of reducing NO_x emissions from gas turbines are currently being researched and developed by the manufacturers of gas turbines. Since thermal NO_x is a function of both temperature (exponentially) and time (linearally), the basis of these controls are to either lower the combustor temperature using lean mixtures air and fuel and/or staging the combustion or decrease the residence time of the combustor. Some manufacturers use a combination of these methods to reduce NO_x emissions. These methods or approaches are lean combustion; reduced combustor residence time; two-stage lean/lean combustion; and two-stage rich/lean combustion.

Most gas turbine combustors were originally designed to operate with a stoichiometric mixture (theoretical amount of air required to react with the fuel). Lean combustion involves increasing the air/fuel ratio of the mixture so that the peak and average temperature within the combustor will be less than that of the stoichiometric mixture. A lean mixture of air and fuel can be premixed before ignition, a stoichiometric mixture can be ignited and additional air can be introduced at a later stage (staging) creating an overall lean mixture in the turbine, or a combination of both can occur. Introducing excess air at a later stage not only creates a leaner mixture but can also reduce the residence time of the combustor (given enough excess air is added at the latter stage to create a mixture so lean that it will no longer combust). Also, the residence time of a combustor can be decreased by increasing the turbulence within the combustor.

Two-stage lean/lean combustors are essentially fuel-staged combustors in which each stage burns lean. The two-stage lean/lean combustor allows the turbine to operate with an extremely lean mixture and a stable flame that should not "blow off" or extinguish. A small stoichiometric pilot flame ignites the premixed gas and provides flame stability. The high NO_x emissions associated with the higher-temperature pilot flame is minor compared to the low NO_x emissions generated by the extremely lean mixture.

Two-stage rich/lean combustors are essentially air-staged combustors in which the primary stage/zone is operated fuel rich and the secondary stage/zone is operated fuel lean. The rich mixture will produce lower temperatures (compared to stoichiometric) and higher concentrations of CO and H_2 because of incomplete combustion. The rich mixture decreases the amount of oxygen available for NO_x

generation and the increased CO and H_2 concentrations will help reduce some of the NO_x formed. Before entering the secondary zone, the exhaust of the primary zone is quenched (to extinguish the flame) by large amounts of air and a lean mixture is now created. The combustion of the lean mixture is then completed in the secondary zone.

Emission factors for natural gas-fired pipeline compressor engines are presented in Table 3.2-1 for baseline operation and in Tables 3.2-2, 3.2-3, 3.2-4, and 3.2-5 for controlled operation. The factors for controlled operation are taken from a single source test. Table 3.2-6 lists noncriteria emission factors for uncontrolled natural gas prime movers.

3.2.5 Updates Since the Fifth Edition

The Fifth Edition was released in January 1995. Revisions to this section since that date are summarized below. For further detail, consult the memoranda describing each supplement or the background report for this section. These and other documents can be found on the CHIEF electronic bulletin board (919-541-5742), or on the new EFIG home page (http://www.epa.gov/oar/oaqps/efig/).

Supplement A, February 1996

- In the table for uncontrolled natural gas prime movers, the SCC for 4-cycle lean burn was changed from 2-01-002-53 to 2-02-002-54. The SCC for 4-cycle rich burn was changed from 2-02-002-54 to 2-02-02-002-53.

- An SCC (2-02-002-53) was provided for 4-cycle rich burn engines, and the "less than" symbol (<) was restored to the appropriate factors.

Supplement B, October 1996

- The introduction section was revised.

- Text was added concerning process description of turbines.

- Text was revised concerning emissions and controls.

- References in various tables were editorially corrected.

- The inconsistency between a CO_2 factor in the table and an equation in the footnote was corrected.

Table 3.2-1. CRITERIA EMISSION FACTORS FOR UNCONTROLLED NATURAL GAS PRIME MOVERS[a]

EMISSION FACTOR RATING: A

Pollutant	Gas Turbines (SCC 2-02-002-01)		2-Cycle Lean Burn (SCC 2-02-002-52)		4-Cycle Lean Burn (SCC 2-02-002-54)		4-Cycle Rich Burn (SCC 2-02-002-53)	
	Emission Factor (lb/hp-hr) (power output)	Emission Factor (lb/MMBtu) (fuel input)	Emission Factor (lb/hp-hr) (power output)	Emission Factor (lb/MMBtu) (fuel input)	Emission Factor (lb/hp-hr) (power output)	Emission Factor (lb/MMBtu) (fuel input)	Emission Factor (lb/hp-hr) (power output)	Emission Factor (lb/MMBtu) (fuel input)
NO_x	2.87 E-03	0.34	0.024	2.7	0.026	3.2	0.022	2.3
CO	1.83 E-03	0.17	3.31 E-03	0.38	3.53 E-03	0.42	0.019	1.6
CO_2[b]	0.88	109	0.77	109	0.77	109	0.77	109
TOC	3.97 E-04	0.053	0.013	1.5	0.011	1.3	2.65 E-03	0.27
TNMOC	2.20 E-05	0.002	9.48 E-04	0.11	1.59 E-03	0.18	3.09 E-04	0.03
CH_4	3.75 E-04	0.051	0.012	1.4	9.04 E-03	1.1	2.43 E-03	0.24

[a] References 6-13. Factors are based on large population of engines. Factors for individual engines from specific manufacturers may vary. To convert from lb/hp-hr to kg/kw-hr, multiply by 0.608. To convert from lb/MMBtu to ng/J, multiply by 430. SCC = Source Classification Code. TNMOC = total nonmethane organic compounds.

[b] Based on 99.5% conversion of the fuel carbon to CO_2. CO_2 [lb/MMBtu] = (3.67)(%CON)(C/E), where %CON = percent conversion of fuel carbon to CO_2, C = carbon content of fuel by weight (0.75), and E = energy content of fuel, 0.0250 MMBtu/lb.

Table 3.2-2. EMISSION FACTORS FOR CONTROLLED NATURAL GAS PRIME MOVERS: COMBUSTION MODIFICATIONS ON 2-CYCLE LEAN BURN ENGINE[a]
(SCC 2-02-002-52)

EMISSION FACTOR RATING: E (except as noted)

Pollutant	Baseline		Increased Air/Fuel Ratio With Intercooling	
	Emission Factor (lb/hp-hr)	Emission Factor (lb/MMBtu)	Emission Factor (lb/hp-hr)	Emission Factor (lb/MMBtu)
NO_x	0.022	2.9	0.011	1.5
CO	2.07 E-03	0.28	3.31 E-03	0.46
CO_2[b]	0.77	109	0.77	109
TOC	0.017	2.2	0.019	2.6
TNMOC	0.011	1.6	0.013	1.8
CH_4	5.07 E-03	0.68	5.51 E-03	0.75
PM-10				
Total (front+back halves)	3.53 E-04	0.046	3.97 E-04	0.055
Solids (front half)	2.16 E-04	0.029	2.87 E-04	0.038
Condensables (back half)	1.26 E-04	0.017	1.28 E-04	0.017

[a] Reference 10-14,17-19. Factors reflect a single data set and as such baseline emissions for this engine were slightly different from the uncontrolled emission factor for 2-cycle lean burn engines. To convert from lb/hp-hr to kg/kw-hr, multiply by 0.608. To convert from lb/MMBtu to ng/J, multiply by 430. TNMOC = total nonmethane organic compounds. PM-10 = particulate matter ≤ 10 micrometers (μm) aerodynamic diameter. (All particulate is assumed to be ≤ 1 μm aerodynamic diameter). SCC = Source Classification Code.

[b] EMISSION FACTOR RATING: A. Based on 99.5% conversion of the fuel carbon to CO_2. CO_2[lb/MMBtu] = (3.67)(%CON)(C/E), where %CON = percent conversion of fuel carbon to CO_2, C = carbon content of fuel by weight (0.75), and E = energy content of fuel, 0.0250 MMBtu/lb. CO_2 emissions are not affected by controls.

Table 3.2-3. EMISSION FACTORS FOR CONTROLLED NATURAL GAS PRIME MOVERS: NONSELECTIVE CATALYTIC REDUCTION ON 4-CYCLE RICH BURN ENGINE[a] (SCC 2-02-002-53)

EMISSION FACTOR RATING: E (except as noted)

Pollutant	Inlet		Outlet	
	Emission Factor (lb/hp-hr)	Emission Factor (lb/MMBtu)	Emission Factor (lb/hp-hr)	Emission Factor (lb/MMBtu)
NO_x	0.017	1.8	5.51 E-03	0.58
CO	0.026	2.8	0.022	2.4
CO_2[b]	0.77	109	0.77	109
TOC	7.28 E-04	0.079	4.41 E-04	0.047
NH_3	1.10 E-04	0.012	1.81 E-03	0.19
C7 - C16	4.19 E-05	0.0042	9.04 E-06	0.0009
C16+	3.75 E-05	0.004	1.32 E-06	0.0001
PM solids (front half)	6.61 E-06	0.0007	6.61 E-06	0.0007
Benzene[c]	ND	7.1 E-04	ND	1.1 E-04
Toluene[c]	ND	2.3 E-04	ND	<2.3 E-05
Xylenes[c]	ND	<5.9 E-05	ND	<4.0 E-05
Propylene	ND	<1.6 E-04	ND	<1.6 E-04
Naphthalene[c]	ND	<4.9 E-05	ND	<4.9 E-05
Formaldehyde[c]	ND	<1.6 E-03	ND	<7.2 E-06
Acetaldehyde[c]	ND	<6.1 E-05	ND	<4.8 E-06
Acrolein[c]	ND	<3.7 E-05	ND	<9.6 E-06

Table 3.2-3 (cont.).

[a] References 8,10-13,15-18. Factors reflect very limited data and as such inlet emissions were slightly different from the uncontrolled emission factor for 4-cycle rich burn engines. To convert from lb/hp-hr to kg/kw-hr, multiply by 0.608. To convert from lb/MMBtu to ng/J, multiply by 430. ND = No data. SCC = Source Classification Code.

[b] EMISSION FACTOR RATING: A. Based on 99.5% conversion of the fuel carbon to CO_2. CO_2(lb/MMBtu) = (3.67)(%CON)(C/E), where %CON = percent conversion of fuel carbon to CO_2, C = carbon content of fuel by weight (0.75), and E = energy content of fuel, 0.0250 MMBtu/lb. CO_2 emissions are not affected by controls.

[c] Hazardous air pollutant listed in the *Clean Air Act*.

Table 3.2-4. EMISSION FACTORS FOR CONTROLLED NATURAL GAS PRIME MOVERS: SELECTIVE CATALYTIC REDUCTION ON 4-CYCLE LEAN BURN ENGINE[a] (SCC 2-02-002-54)

EMISSION FACTOR RATING: E (except as noted)

Pollutant	Inlet		Outlet	
	Emission Factor (lb/hp-hr)	Emission Factor (lb/MMBtu)	Emission Factor (lb/hp-hr)	Emission Factor (lb/MMBtu)
NO_x	0.042	6.4	7.94 E-03	1.2
CO	2.65 E-03	0.38	2.43 E-03	0.37
CO_2[b]	0.77	109	0.77	109
NH_3	ND	ND	5.95 E-04	0.091
C7 - C16	1.54 E-05	0.0023	6.83 E-06	0.0013
C16+	2.87 E-05	0.0044	5.29 E-06	0.0008

[a] References 10-13,16-19. Factors reflect very limited data and as such inlet emissions were slightly different from the uncontrolled emission factor for 4-cycle lean bum engines. To convert from lb/hp-hr to kg/kw-hr multiply by 0.608. To convert from lb/MMBtu to ng/J, multiply by 430. ND = No data. SCC = Source Classification Code.

[b] EMISSION FACTOR RATING: A. Based on 99.5% conversion of the fuel carbon to CO_2. CO_2 [lb/MMBtu] = (3.67)(%CON)(C/E), where %CON = percent conversion of fuel carbon to CO_2, C = carbon content of fuel by weight (0.75), and E = energy content of fuel, 0.0250 MMBtu/lb. CO_2 emissions are not affected by controls.

Table 3.2-5. EMISSION FACTORS FOR CONTROLLED NATURAL GAS PRIME MOVERS: CLEAN BURN AND PRECOMBUSTION CHAMBER ON 2-CYCLE LEAN BURN ENGINE[a] (SCC 2-02-002-52)

EMISSION FACTOR RATING: C (except as noted)

Pollutant	Clean Burn		Precombustion Chamber	
	Emission Factor (lb/hp-hr)	Emission Factor (lb/MMBtu)	Emission Factor (lb/hp-hr)	Emission Factor (lb/MMBtu)
NO_x	5.07 E-03	0.83	6.39 E-03	0.85
CO	2.43 E-03	0.30	5.29 E-03	0.67
CO_2[b]	0.77	109	0.77	109
TOC	5.51 E-03	0.77	0.014	1.8
TNMOC	2.65 E-04	0.15	1.94 E-03	0.25
CH_4	5.29 E-03	0.62	0.012	1.5

[a] Reference 7,10-13,17-19. CO_2 emissions are not affected by controls. To convert from lb/hp-hr to kg/kw-hr, multiply by 0.608. To convert from lb/MMBtu to ng/J, multiply by 430. TNMOC = total nonmethane organic compounds. SCC = Source Classification Code.

[b] EMISSION FACTOR RATING: A. Based on 99.5% conversion of the fuel carbon to CO_2. CO_2 [lb/MMBtu] = (3.67)(%CON)(C/E), where %CON = percent conversion of fuel carbon to CO_2, C = carbon content of fuel by weight (0.75), and E = energy content of fuel, 0.0250 MMBtu/lb.

Table 3.2-6. NONCRITERIA EMISSION FACTORS FOR UNCONTROLLED NATURAL GAS 2-CYCLE LEAN BURN ENGINES

EMISSION FACTOR RATING: E

Pollutant	Emission Factors (lb/hp-hr)
Formaldehyde[b]	2.93 E-03
Benzene[b]	3.62 E-06
Toluene[b]	3.62 E-06
Ethylbenzene[b]	1.81 E-06
Xylenes[b]	5.43 E-06

[a] Reference 20. Source Classification Code 2-02-002-52. Ratings reflect very limited data and may not apply to specific facilities. To convert from lb/hp-hr to kg/kw-hr, multiply by 0.608.
[b] Hazardous air pollutant listed in the *Clean Air Act*.

References For Section 3.2

1. *Standards Support And Environmental Impact Statement, Volume I: Proposed Standards Of Performance For Stationary Gas Turbines*, EPA-450/2-77-017a, September 1977.

2. *Engines, Turbines, And Compressors Directory*, American Gas Association, Catalog #XF0488.

3. *Standards Support And Environmental Impact Statement, Volume I: Stationary Internal Combustion Engines*, EPA-450/2-78-125a, U. S. Environmental Protection Agency, Office of Air Quality Planning and Standards, Research Triangle Park, NC, July 1979.

4. *Limiting Net Greenhouse Gas Emissions In The United States, Volume II: Energy Responses*, Report for the Office of Environmental Analysis, Office of Policy, Planning and Analysis, Department of Energy (DOE), DOE/PE-0101 Volume II, September 1991.

5. C. Castaldini, *Evaluation Of Water Injection Impacts For Gas Turbine NO_x Control At Compressor Stations*, prepared by Acurex Corp. for the Gas Research Institute, GRI-90/0138, July 1990.

6. N. L. Martin and R. H. Thring, *Computer Database Of Emissions Data For Stationary Reciprocating Natural Gas Engines And Gas Turbines In Use By The Gas Pipeline Transmission Industry Users Manual (Electronic Database Included)*, GRI-89/0041, Gas Research Institute, Chicago, IL, February 1989.

7. R. E. Fanick, *et al.*, *Emissions Data For Stationary Reciprocating Engines And Gas Turbines In Use By The Gas Pipeline Transmission Industry — Phases I & II*, Project PR-15-613, Pipeline Research Committee, American Gas Association, Arlington, VA, April 1988.

8. C. Castaldini, *NO_x Reduction Technologies For Natural Gas Industry Prime Movers*, GRI-90/0215, Gas Research Institute, Chicago, IL, August 1990.

9. C. Urban, *Compilation Of Emissions Data For Stationary Reciprocating Gas Engines And Gas Turbines In Use By American Gas Association Member Companies*, prepared by Southwest Research Institute Pipeline Research Committee of the American Gas Association, Project PR-15-86, May 1980.

10. G. Marland and R. M. Rotty, *Carbon Dioxide Emissions From Fossil Fuels: A Procedure For Estimation And Results For 1951-1981*, DOE/NBB-0036 TR-003, Carbon Dioxide Research Division, Office of Energy Research, U. S. Department of Energy, Oak Ridge, TN, 1983.

11. G. Marland and R. M. Rotty, *Carbon Dioxide Emissions From Fossil Fuels: A Procedure For Estimation And Results For 1950-1982*, Tellus 36B:232-261, 1984.

12. *Inventory Of U. S. Greenhouse Gas Emissions And Sinks: 1990-1991*, EPA-230-R-96-006, U. S. Environmental Protection Agency, Washington, DC, November 1995.

13. *IPCC Guidelines For National Greenhouse Gas Inventories Workbook*, Intergovernmental Panel on Climate Change/Organization for Economic Cooperation and Development, Paris, France, 1995.

14. C. Castaldini, *Environmental Assessment Of NO_x Control On A Spark-ignited Large Bore Reciprocating Internal Combustion Engine*, EPA-600/7-86-002A, U. S. Environmental Protection Agency, Cincinnati, OH, January 6, 1986.

15. C. Castaldini and L. R. Waterland, *Environmental Assessment Of A Reciprocating Engine Retrofitted With Nonselective Catalytic Reduction*, EPA-600/7-84-073B, U. S. Environmental Protection Agency, Cincinnati, OH, June 1984.

16. *Air Pollution Source Testing For California AB2588 On An Oil Platform Operated By Chevron USA, Inc. Platform Hope, California*, Chevron USA, Inc., Ventura, CA, August 29, 1990.

17. *Air Pollution Source Testing For California AB2588 Of Engines At The Chevron USA, Inc. Carpinteria Facility*, Chevron USA, Inc., Ventura, CA, August 30, 1990.

18. *Pooled Source Emission Test Report: Gas Fired IC Engines In Santa Barbara County*, ARCO, Bakersfield, CA, July 1990.

19. C. Castaldini and L. R. Waterland, *Environmental Assessment Of A Reciprocating Engine Retrofitted With Selective Catalytic Reduction*, EPA Contract No. 68-02-3188, U. S. Environmental Protection Agency, Research Triangle Park, NC, December 1984.

20. *Engines, Turbines, And Compressors Directory*, Catalog #XF0488, American Gas Association, Arlington, VA, 1985.

3.3 Gasoline And Diesel Industrial Engines

3.3.1 General

The engine category addressed by this section covers a wide variety of industrial applications of both gasoline and diesel internal combustion (IC) engines such as aerial lifts, fork lifts, mobile refrigeration units, generators, pumps, industrial sweepers/scrubbers, material handling equipment (such as conveyors), and portable well-drilling equipment. The three primary fuels for reciprocating IC engines are gasoline, diesel fuel oil (No.2), and natural gas. Gasoline is used primarily for mobile and portable engines. Diesel fuel oil is the most versatile fuel and is used in IC engines of all sizes. The rated power of these engines covers a rather substantial range, up to 250 horsepower (hp) for gasoline engines and up to 600 hp for diesel engines. (Diesel engines greater than 600 hp are covered in Section 3.4, "Large Stationary Diesel And All Stationary Dual-fuel Engines".) Understandably, substantial differences in engine duty cycles exist. It was necessary, therefore, to make reasonable assumptions concerning usage in order to formulate some of the emission factors.

3.3.2 Process Description

All reciprocating IC engines operate by the same basic process. A combustible mixture is first compressed in a small volume between the head of a piston and its surrounding cylinder. The mixture is then ignited, and the resulting high-pressure products of combustion push the piston through the cylinder. This movement is converted from linear to rotary motion by a crankshaft. The piston returns, pushing out exhaust gases, and the cycle is repeated.

There are 2 methods used for stationary reciprocating IC engines: compression ignition (CI) and spark ignition (SI). This section deals with both types of reciprocating IC engines. All diesel-fueled engines are compression ignited, and all gasoline-fueled engines are spark ignited.

In CI engines, combustion air is first compression heated in the cylinder, and diesel fuel oil is then injected into the hot air. Ignition is spontaneous because the air temperature is above the autoignition temperature of the fuel. SI engines initiate combustion by the spark of an electrical discharge. Usually the fuel is mixed with the air in a carburetor (for gasoline) or at the intake valve (for natural gas), but occasionally the fuel is injected into the compressed air in the cylinder.

CI engines usually operate at a higher compression ratio (ratio of cylinder volume when the piston is at the bottom of its stroke to the volume when it is at the top) than SI engines because fuel is not present during compression; hence there is no danger of premature autoignition. Since engine thermal efficiency rises with increasing pressure ratio (and pressure ratio varies directly with compression ratio), CI engines are more efficient than SI engines. This increased efficiency is gained at the expense of poorer response to load changes and a heavier structure to withstand the higher pressures.[1]

3.3.3 Emissions

Most of the pollutants from IC engines are emitted through the exhaust. However, some total organic compounds (TOC) escape from the crankcase as a result of blowby (gases that are vented from the oil pan after they have escaped from the cylinder past the piston rings) and from the fuel tank and carburetor because of evaporation. Nearly all of the TOCs from diesel CI engines enter the

atmosphere from the exhaust. Evaporative losses are insignificant in diesel engines due to the low volatility of diesel fuels.

The primary pollutants from internal combustion engines are oxides of nitrogen (NO_x), total organic compounds (TOC), carbon monoxide (CO), and particulates, which include both visible (smoke) and nonvisible emissions. Nitrogen oxide formation is directly related to high pressures and temperatures during the combustion process and to the nitrogen content, if any, of the fuel. The other pollutants, HC, CO, and smoke, are primarily the result of incomplete combustion. Ash and metallic additives in the fuel also contribute to the particulate content of the exhaust. Sulfur oxides (SO_x) also appear in the exhaust from IC engines. The sulfur compounds, mainly sulfur dioxide (SO_2), are directly related to the sulfur content of the fuel.[2]

3.3.3.1 Nitrogen Oxides -

Nitrogen oxide formation occurs by two fundamentally different mechanisms. The predominant mechanism with internal combustion engines is thermal NO_x which arises from the thermal dissociation and subsequent reaction of nitrogen (N_2) and oxygen (O_2) molecules in the combustion air. Most thermal NO_x is formed in the high-temperature region of the flame from dissociated molecular nitrogen in the combustion air. Some NO_x, called prompt NO_x, is formed in the early part of the flame from reaction of nitrogen intermediary species, and HC radicals in the flame. The second mechanism, fuel NO_x, stems from the evolution and reaction of fuel-bound nitrogen compounds with oxygen. Gasoline, and most distillate oils have no chemically-bound fuel N_2 and essentially all NO_x formed is thermal NO_x.

3.3.3.2 Total Organic Compounds -

The pollutants commonly classified as hydrocarbons are composed of a wide variety of organic compounds and are discharged into the atmosphere when some of the fuel remains unburned or is only partially burned during the combustion process. Most unburned hydrocarbon emissions result from fuel droplets that were transported or injected into the quench layer during combustion. This is the region immediately adjacent to the combustion chamber surfaces, where heat transfer outward through the cylinder walls causes the mixture temperatures to be too low to support combustion.

Partially burned hydrocarbons can occur because of poor air and fuel homogeneity due to incomplete mixing, before or during combustion; incorrect air/fuel ratios in the cylinder during combustion due to maladjustment of the engine fuel system; excessively large fuel droplets (diesel engines); and low cylinder temperature due to excessive cooling (quenching) through the walls or early cooling of the gases by expansion of the combustion volume caused by piston motion before combustion is completed.[2]

3.3.3.3 Carbon Monoxide -

Carbon monoxide is a colorless, odorless, relatively inert gas formed as an intermediate combustion product that appears in the exhaust when the reaction of CO to CO_2 cannot proceed to completion. This situation occurs if there is a lack of available oxygen near the hydrocarbon (fuel) molecule during combustion, if the gas temperature is too low, or if the residence time in the cylinder is too short. The oxidation rate of CO is limited by reaction kinetics and, as a consequence, can be accelerated only to a certain extent by improvements in air and fuel mixing during the combustion process.[2-3]

3.3.3.4 Smoke and Particulate Matter -

White, blue, and black smoke may be emitted from IC engines. Liquid particulates appear as white smoke in the exhaust during an engine cold start, idling, or low load operation. These are formed in the quench layer adjacent to the cylinder walls, where the temperature is not high enough to ignite the fuel. Blue smoke is emitted when lubricating oil leaks, often past worn piston rings, into the combustion chamber and is partially burned. Proper maintenance is the most effective method of preventing blue smoke emissions from all types of IC engines. The primary constituent of black smoke is agglomerated carbon particles (soot) formed in regions of the combustion mixtures that are oxygen deficient.[2]

3.3.3.5 Sulfur Oxides -

Sulfur oxides emissions are a function of only the sulfur content in the fuel rather than any combustion variables. In fact, during the combustion process, essentially all the sulfur in the fuel is oxidized to SO_2. The oxidation of SO_2 gives sulfur trioxide (SO_3), which reacts with water to give sulfuric acid (H_2SO_4), a contributor to acid precipitation. Sulfuric acid reacts with basic substances to give sulfates, which are fine particulates that contribute to PM-10 and visibility reduction. Sulfur oxide emissions also contribute to corrosion of the engine parts.[2-3]

3.3.4 Control Technologies

Control measures to date are primarily directed at limiting NO_x and CO emissions since they are the primary pollutants from these engines. From a NO_x control viewpoint, the most important distinction between different engine models and types of reciprocating engines is whether they are rich-burn or lean-burn. Rich-burn engines have an air-to-fuel ratio operating range that is near stoichiometric or fuel-rich of stoichiometric and as a result the exhaust gas has little or no excess oxygen. A lean-burn engine has an air-to-fuel operating range that is fuel-lean of stoichiometric; therefore, the exhaust from these engines is characterized by medium to high levels of O_2. The most common NO_x control technique for diesel and dual-fuel engines focuses on modifying the combustion process. However, selective catalytic reduction (SCR) and nonselective catalytic reduction (NSCR) which are post-combustion techniques are becoming available. Controls for CO have been partly adapted from mobile sources.[4]

Combustion modifications include injection timing retard (ITR), preignition chamber combustion (PCC), air-to-fuel ratio adjustments, and derating. Injection of fuel into the cylinder of a CI engine initiates the combustion process. Retarding the timing of the diesel fuel injection causes the combustion process to occur later in the power stroke when the piston is in the downward motion and combustion chamber volume is increasing. By increasing the volume, the combustion temperature and pressure are lowered, thereby lowering NO_x formation. ITR reduces NO_x from all diesel engines; however, the effectiveness is specific to each engine model. The amount of NO_x reduction with ITR diminishes with increasing levels of retard.[4]

Improved swirl patterns promote thorough air and fuel mixing and may include a precombustion chamber (PCC). A PCC is an antechamber that ignites a fuel-rich mixture that propagates to the main combustion chamber. The high exit velocity from the PCC results in improved mixing and complete combustion of the lean air/fuel mixture which lowers combustion temperature, thereby reducing NO_x emissions.[4]

The air-to-fuel ratio for each cylinder can be adjusted by controlling the amount of fuel that enters each cylinder. At air-to-fuel ratios less than stoichiometric (fuel-rich), combustion occurs under conditions of insufficient oxygen which causes NO_x to decrease because of lower oxygen and lower temperatures. Derating involves restricting the engine operation to lower than normal levels of power production for the given application. Derating reduces cylinder pressures and temperatures, thereby lowering NO_x formation rates.[4]

SCR is an add-on NO_x control placed in the exhaust stream following the engine and involves injecting ammonia (NH_3) into the flue gas. The NH_3 reacts with NO_x in the presence of a catalyst to form water and nitrogen. The effectiveness of SCR depends on fuel quality and engine duty cycle (load fluctuations). Contaminants in the fuel may poison or mask the catalyst surface causing a reduction or termination in catalyst activity. Load fluctuations can cause variations in exhaust temperature and NO_x concentration which can create problems with the effectiveness of the SCR system.[4]

NSCR is often referred to as a three-way conversion catalyst system because the catalyst reactor simultaneously reduces NO_x, CO, and HC and involves placing a catalyst in the exhaust stream of the engine. The reaction requires that the O_2 levels be kept low and that the engine be operated at fuel-rich air-to-fuel ratios.[4]

The most accurate method for calculating such emissions is on the basis of "brake-specific" emission factors (pounds per horsepower-hour [lb/hp-hr]). Emissions are the product of the brake-specific emission factor, the usage in hours, the rated power available, and the load factor (the power actually used divided by the power available). However, for emission inventory purposes, it is often easier to assess this activity on the basis of fuel used.

Once reasonable usage and duty cycles for this category were ascertained, emission values were aggregated to arrive at the factors for criteria and organic pollutants presented. Factors in Table 3.3-1 are in pounds per million British thermal unit (lb/MMBtu). Emission data for a specific design type were weighted according to estimated material share for industrial engines. The emission factors in these tables, because of their aggregate nature, are most appropriately applied to a population of industrial engines rather than to an individual power plant. Table 3.3-2 shows unweighted speciated organic compound and air toxic emission factors based upon only 2 engines. Their inclusion in this section is intended for rough order-of-magnitude estimates only.

Table 3.3-3 summarizes whether the various diesel emission reduction technologies (some of which may be applicable to gasoline engines) will generally increase or decrease the selected parameter. These technologies are categorized into fuel modifications, engine modifications, and exhaust after-treatments. Current data are insufficient to quantify the results of the modifications. Table 3.3-3 provides general information on the trends of changes on selected parameters.

3.3.5 Updates Since the Fifth Edition

The Fifth Edition was released in January 1995. Revisions to this section since that date are summarized below. For further detail, consult the memoranda describing each supplement or the background report for this section. These and other documents can be found on the CHIEF electronic bulletin board (919-541-5742), or on the new EFIG home page (http://www.epa.gov/oar/oaqps/efig/).

Supplement A, February 1996

No changes.

Supplement B, October 1996

- Text was revised concerning emissions and controls.
- The CO_2 emission factor was adjusted to reflect 98.5 percent conversion efficiency.

Table 3.3-1. EMISSION FACTORS FOR UNCONTROLLED GASOLINE AND DIESEL INDUSTRIAL ENGINES[a]

Pollutant	Gasoline Fuel (SCC 2-02-003-01, 2-03-003-01)		Diesel Fuel (SCC 2-02-001-02, 2-03-001-01)		EMISSION FACTOR RATING
	Emission Factor (lb/hp-hr) (power output)	Emission Factor (lb/MMBtu) (fuel input)	Emission Factor (lb/hp-hr) (power output)	Emission Factor (lb/MMBtu) (fuel input)	
NO_x	0.011	1.63	0.031	4.41	D
CO	0.439	62.7	6.68 E-03	0.95	D
SO_x	5.91 E-04	0.084	2.05 E-03	0.29	D
PM-10[b]	7.21 E-04	0.10	2.20 E-03	0.31	D
CO_2[c]	1.08	154	1.15	164	B
Aldehydes	4.85 E-04	0.07	4.63 E-04	0.07	D
TOC					
Exhaust	0.015	2.10	2.47 E-03	0.35	D
Evaporative	6.61 E-04	0.09	0.00	0.00	E
Crankcase	4.85 E-03	0.69	4.41 E-05	0.01	E
Refueling	1.08 E-03	0.15	0.00	0.00	E

[a] References 2,5-6,9-14. When necessary, an average brake-specific fuel consumption (BSFC) of 7,000 Btu/hp-hr was used to convert from lb/MMBtu to lb/hp-hr. To convert from lb/hp-hr to kg/kw-hr, multiply by 0.608. To convert from lb/MMBtu to ng/J, multiply by 430. SCC = Source Classification Code. TOC = total organic compounds.

[b] PM-10 = particulate matter less than or equal to 10 μm aerodynamic diameter. All particulate is assumed to be ≤ 1 μm in size.

[c] Assumes 99% conversion of carbon in fuel to CO_2 with 87 weight % carbon in diesel, 86 weight % carbon in gasoline, average BSFC of 7,000 Btu/hp-hr, diesel heating value of 19,300 Btu/lb, and gasoline heating value of 20,300 Btu/lb.

Table 3.3-2. SPECIATED ORGANIC COMPOUND EMISSION FACTORS FOR UNCONTROLLED DIESEL ENGINES[a]

EMISSION FACTOR RATING: E

Pollutant	Emission Factor (Fuel Input) (lb/MMBtu)
Benzene[b]	9.33 E-04
Toluene[b]	4.09 E-04
Xylenes[b]	2.85 E-04
Propylene[b]	2.58 E-03
1,3-Butadiene[b,c]	<3.91 E-05
Formaldehyde[b]	1.18 E-03
Acetaldehyde[b]	7.67 E-04
Acrolein[b]	<9.25 E-05
Polycyclic aromatic hydrocarbons (PAH)	
Naphthalene[b]	8.48 E-05
Acenaphthylene	<5.06 E-06
Acenaphthene	<1.42 E-06
Fluorene	2.92 E-05
Phenanthrene	2.94 E-05
Anthracene	1.87 E-06
Fluoranthene	7.61 E-06
Pyrene	4.78 E-06
Benzo(a)anthracene	1.68 E-06
Chrysene	3.53 E-07
Benzo(b)fluoranthene	<9.91 E-08
Benzo(k)fluoranthene	<1.55 E-07
Benzo(a)pyrene	<1.88 E-07
Indeno(1,2,3-cd)pyrene	<3.75 E-07
Dibenz(a,h)anthracene	<5.83 E-07
Benzo(g,h,l)perylene	<4.89 E-07
TOTAL PAH	1.68 E-04

[a] Based on the uncontrolled levels of 2 diesel engines from References 6-7. Source Classification Codes 2-02-001-02, 2-03-001-01. To convert from lb/MMBtu to ng/J, multiply by 430.
[b] Hazardous air pollutant listed in the *Clean Air Act*.
[c] Based on data from 1 engine.

Table 3.3-3. EFFECT OF VARIOUS EMISSION CONTROL TECHNOLOGIES ON DIESEL ENGINES[a]

Technology	Affected Parameter	
	Increase	Decrease
Fuel modifications		
Sulfur content increase	PM, wear	
Aromatic content increase	PM, NO_x	
Cetane number		PM, NO_x
10% and 90% boiling point		PM
Fuel additives		PM, NO_x
Water/Fuel emulsions		NO_x
Engine modifications		
Injection timing retard	PM, BSFC	NO_x, power
Fuel injection pressure	PM, NO_x	
Injection rate control		NO_x, PM
Rapid spill nozzles		PM
Electronic timing & metering		NO_x, PM
Injector nozzle geometry		PM
Combustion chamber modifications		NO_x, PM
Turbocharging	PM, power	NO_x
Charge cooling		NO_x
Exhaust gas recirculation	PM, power, wear	NO_x
Oil consumption control		PM, wear
Exhaust after-treatment		
Particulate traps		PM
Selective catalytic reduction		NO_x
Oxidation catalysts		TOC, CO, PM

[a] Reference 8. PM = particulate matter. BSFC = brake-specific fuel consumption.

References For Section 3.3

1. H. I. Lips, *et al., Environmental Assessment Of Combustion Modification Controls For Stationary Internal Combustion Engines*, EPA-600/7-81-127, U. S. Environmental Protection Agency, Cincinnati, OH, July 1981.

2. *Standards Support And Environmental Impact Statement, Volume 1: Stationary Internal Combustion Engines*, EPA-450/2-78-125a, U. S. Environmental Protection Agency, Research Triangle Park, NC, July 1979.

3. M. Hoggan, *et al., Air Quality Trends In California's South Coast And Southeast Desert Air Basins, 1976-1990, Air Quality Management Plan, Appendix II-B*, South Coast Air Quality Management District, July 1991.

4. R. B. Snyder, *Alternative Control Techniques Document .. NO_x Emissions From Stationary Reciprocating Internal Combustion Engines*, EPA-453/R-93-032, U. S. Environmental Protection Agency, Research Triangle Park, July 1993.

5. C. T. Hare and K. J. Springer, *Exhaust Emissions From Uncontrolled Vehicles And Related Equipment Using Internal Combustion Engines, Part 5: Farm, Construction, And Industrial Engines*, APTD-1494, U. S. Environmental Protection Agency, Research Triangle Park, NC, October 1973.

6. *Pooled Source Emission Test Report: Oil And Gas Production Combustion Sources, Fresno And Ventura Counties, California*, ENSR 7230-007-700, Western States Petroleum Association, Bakersfield, CA, December 1990.

7. W. E. Osborn and M. D. McDannel, *Emissions Of Air Toxic Species: Test Conducted Under AB2588 For The Western States Petroleum Association*, CR 72600-2061, Western States Petroleum Association, Glendale, CA, May 1990.

8. *Technical Feasibility Of Reducing NO_x And Particulate Emissions From Heavy-duty Engines*, CARB Contract A132-085, California Air Resources Board, Sacramento, CA, March 1992.

9. G. Marland and R. M. Rotty, *Carbon Dioxide Emissions From Fossil Fuels: A Procedure For Estimation And Results For 1951-1981*, DOE/NBB-0036 TR-003, Carbon Dioxide Research Division, Office of Energy Research, U. S. Department of Energy, Oak Ridge, TN, 1983.

10. A. Rosland, *Greenhouse Gas Emissions in Norway: Inventories and Estimation Methods*, Oslo: Ministry of Environment, 1993.

11. *Sector-Specific Issues and Reporting Methodologies Supporting the General Guidelines for the Voluntary Reporting of Greenhouse Gases under Section 1605(b) of the Energy Policy Act of 1992* (1994) DOE/PO-0028, Volume 2 of 3, U.S. Department of Energy.

12. G. Marland and R. M. Rotty, *Carbon Dioxide Emissions From Fossil Fuels: A Procedure For Estimation And Results For 1950-1982*, Tellus 36B:232-261, 1984.

13. *Inventory Of U. S. Greenhouse Gas Emissions And Sinks: 1990-1991*, EPA-230-R-96-006, U. S. Environmental Protection Agency, Washington, DC, November 1995.

14. *IPCC Guidelines For National Greenhouse Gas Inventories Workbook*, Intergovernmental Panel on Climate Change/Organization for Economic Cooperation and Development, Paris, France, 1995.

3.4 Large Stationary Diesel And All Stationary Dual-fuel Engines

3.4.1 General

The primary domestic use of large stationary diesel engines (greater than 600 horsepower [hp]) is in oil and gas exploration and production. These engines, in groups of 3 to 5, supply mechanical power to operate drilling (rotary table), mud pumping, and hoisting equipment, and may also operate pumps or auxiliary power generators. Another frequent application of large stationary diesels is electricity generation for both base and standby service. Smaller uses include irrigation, hoisting, and nuclear power plant emergency cooling water pump operation.

Dual-fuel engines were developed to obtain compression ignition performance and the economy of natural gas, using a minimum of 5 to 6 percent diesel fuel to ignite the natural gas. Large dual-fuel engines have been used almost exclusively for prime electric power generation. This section includes all dual-fuel engines.

3.4.2 Process Description

All reciprocating internal combustion (IC) engines operate by the same basic process. A combustible mixture is first compressed in a small volume between the head of a piston and its surrounding cylinder. The mixture is then ignited, and the resulting high-pressure products of combustion push the piston through the cylinder. This movement is converted from linear to rotary motion by a crankshaft. The piston returns, pushing out exhaust gases, and the cycle is repeated.

There are 2 ignition methods used in stationary reciprocating IC engines, compression ignition (CI) and spark ignition (SI). In CI engines, combustion air is first compression heated in the cylinder, and diesel fuel oil is then injected into the hot air. Ignition is spontaneous because the air temperature is above the autoignition temperature of the fuel. SI engines initiate combustion by the spark of an electrical discharge. Usually the fuel is mixed with the air in a carburetor (for gasoline) or at the intake valve (for natural gas), but occasionally the fuel is injected into the compressed air in the cylinder. Although all diesel- fueled engines are compression ignited and all gasoline- and gas-fueled engines are spark ignited, gas can be used in a CI engine if a small amount of diesel fuel is injected into the compressed gas/air mixture to burn any mixture ratio of gas and diesel oil (hence the name dual fuel), from 6 to 100 percent diesel oil.

CI engines usually operate at a higher compression ratio (ratio of cylinder volume when the piston is at the bottom of its stroke to the volume when it is at the top) than SI engines because fuel is not present during compression; hence there is no danger of premature autoignition. Since engine thermal efficiency rises with increasing pressure ratio (and pressure ratio varies directly with compression ratio), CI engines are more efficient than SI engines. This increased efficiency is gained at the expense of poorer response to load changes and a heavier structure to withstand the higher pressures.[1]

3.4.3 Emissions And Controls

Most of the pollutants from IC engines are emitted through the exhaust. However, some total organic compounds (TOC) escape from the crankcase as a result of blowby (gases that are vented from the oil pan after they have escaped from the cylinder past the piston rings) and from the fuel tank

and carburetor because of evaporation. Nearly all of the TOCs from diesel CI engines enter the atmosphere from the exhaust. Crankcase blowby is minor because TOCs are not present during compression of the charge. Evaporative losses are insignificant in diesel engines due to the low volatility of diesel fuels. In general, evaporative losses are also negligible in engines using gaseous fuels because these engines receive their fuel continuously from a pipe rather than via a fuel storage tank and fuel pump.

The primary pollutants from internal combustion engines are oxides of nitrogen (NO_x), hydrocarbons and other organic compounds, carbon monoxide (CO), and particulates, which include both visible (smoke) and nonvisible emissions. Nitrogen oxide formation is directly related to high pressures and temperatures during the combustion process and to the nitrogen content, if any, of the fuel. The other pollutants, HC, CO, and smoke, are primarily the result of incomplete combustion. Ash and metallic additives in the fuel also contribute to the particulate content of the exhaust. Sulfur oxides also appear in the exhaust from IC engines. The sulfur compounds, mainly sulfur dioxide (SO_2), are directly related to the sulfur content of the fuel.[2]

3.4.3.1 Nitrogen Oxides -

Nitrogen oxide formation occurs by two fundamentally different mechanisms. The predominant mechanism with internal combustion engines is thermal NO_x which arises from the thermal dissociation and subsequent reaction of nitrogen (N_2) and oxygen (O_2) molecules in the combustion air. Most thermal NO_x is formed in the high-temperature region of the flame from dissociated molecular nitrogen in the combustion air. Some NO_x, called prompt NO_x, is formed in the early part of the flame from reaction of nitrogen intermediary species, and HC radicals in the flame. The second mechanism, fuel NO_x, stems from the evolution and reaction of fuel-bound nitrogen compounds with oxygen. Gasoline, and most distillate oils, have no chemically-bound fuel N_2 and essentially all NO_x formed is thermal NO_x.

3.4.3.2 Total Organic Compounds -

The pollutants commonly classified as hydrocarbons are composed of a wide variety of organic compounds and are discharged into the atmosphere when some of the fuel remains unburned or is only partially burned during the combustion process. Most unburned hydrocarbon emissions result from fuel droplets that were transported or injected into the quench layer during combustion. This is the region immediately adjacent to the combustion chamber surfaces, where heat transfer outward through the cylinder walls causes the mixture temperatures to be too low to support combustion.

Partially burned hydrocarbons can occur because of poor air and fuel homogeneity due to incomplete mixing, before or during combustion; incorrect air/fuel ratios in the cylinder during combustion due to maladjustment of the engine fuel system; excessively large fuel droplets (diesel engines); and low cylinder temperature due to excessive cooling (quenching) through the walls or early cooling of the gases by expansion of the combustion volume caused by piston motion before combustion is completed.[2]

3.4.3.3 Carbon Monoxide -

Carbon monoxide is a colorless, odorless, relatively inert gas formed as an intermediate combustion product that appears in the exhaust when the reaction of CO to CO_2 cannot proceed to completion. This situation occurs if there is a lack of available oxygen near the hydrocarbon (fuel) molecule during combustion, if the gas temperature is too low, or if the residence time in the cylinder is too short. The oxidation rate of CO is limited by reaction kinetics and, as a consequence, can be accelerated only to a certain extent by improvements in air and fuel mixing during the combustion process.[2-3]

3.4.3.4 Smoke, Particulate Matter, and PM-10 -

White, blue, and black smoke may be emitted from IC engines. Liquid particulates appear as white smoke in the exhaust during an engine cold start, idling, or low load operation. These are formed in the quench layer adjacent to the cylinder walls, where the temperature is not high enough to ignite the fuel. Blue smoke is emitted when lubricating oil leaks, often past worn piston rings, into the combustion chamber and is partially burned. Proper maintenance is the most effective method of preventing blue smoke emissions from all types of IC engines. The primary constituent of black smoke is agglomerated carbon particles (soot).[2]

3.4.3.5 Sulfur Oxides -

Sulfur oxide emissions are a function of only the sulfur content in the fuel rather than any combustion variables. In fact, during the combustion process, essentially all the sulfur in the fuel is oxidized to SO_2. The oxidation of SO_2 gives sulfur trioxide (SO_3), which reacts with water to give sulfuric acid (H_2SO_4), a contributor to acid precipitation. Sulfuric acid reacts with basic substances to give sulfates, which are fine particulates that contribute to PM-10 and visibility reduction. Sulfur oxide emissions also contribute to corrosion of the engine parts.[2,3]

Table 3.4-1 contains gaseous emission factors for the pollutants discussed above, expressed in units of pounds per horsepower-hour (lb/hp-hr), and pounds per million British thermal unit (lb/MMBtu). Table 3.4-2 shows the particulate and particle-sizing emission factors. Table 3.4-3 shows the speciated organic compound emission factors and Table 3.4-4 shows the emission factors for polycyclic aromatic hydrocarbons (PAH). These tables do not provide a complete speciated organic compound and PAH listing because they are based only on a single engine test; they are to be used only for rough order of magnitude comparisons.

Table 3.4-5 shows the NO_x reduction and fuel consumption penalties for diesel and dual-fueled engines based on some of the available control techniques. The emission reductions shown are those that have been demonstrated. The effectiveness of controls on a particular engine will depend on the specific design of each engine, and the effectiveness of each technique could vary considerably. Other NO_x control techniques exist but are not included in Table 3.4-5. These techniques include internal/external exhaust gas recirculation, combustion chamber modification, manifold air cooling, and turbocharging.

3.4.4 Control Technologies

Control measures to date are primarily directed at limiting NO_x and CO emissions since they are the primary pollutants from these engines. From a NO_x control viewpoint, the most important distinction between different engine models and types of reciprocating engines is whether they are rich-burn or lean-burn. Rich-burn engines have an air-to-fuel ratio operating range that is near stoichiometric or fuel-rich of stoichiometric and as a result the exhaust gas has little or no excess oxygen. A lean-burn engine has an air-to-fuel operating range that is fuel-lean of stoichiometric; therefore, the exhaust from these engines is characterized by medium to high levels of O_2. The most common NO_x control technique for diesel and dual fuel engines focuses on modifying the combustion process. However, selective catalytic reduction (SCR) and nonselective catalytic reduction (NSCR) which are post-combustion techniques are becoming available. Control for CO have been partly adapted from mobile sources.[5]

Combustion modifications include injection timing retard (ITR), preignition chamber combustion (PCC), air-to-fuel ratio, and derating. Injection of fuel into the cylinder of a CI engine initiates the combustion process. Retarding the timing of the diesel fuel injection causes the combustion process to occur later in the power stroke when the piston is in the downward motion and

combustion chamber volume is increasing. By increasing the volume, the combustion temperature and pressure are lowered, thereby lowering NO_x formation. ITR reduces NO_x from all diesel engines; however, the effectiveness is specific to each engine model. The amount of NO_x reduction with ITR diminishes with increasing levels of retard.[5]

Improved swirl patterns promote thorough air and fuel mixing and may include a precombustion chamber (PCC). A PCC is an antechamber that ignites a fuel-rich mixture that propagates to the main combustion chamber. The high exit velocity from the PCC results in improved mixing and complete combustion of the lean air/fuel mixture which lowers combustion temperature, thereby reducing NO_x emissions.[5]

The air-to-fuel ratio for each cylinder can be adjusted by controlling the amount of fuel that enters each cylinder. At air-to-fuel ratios less than stoichiometric (fuel-rich), combustion occurs under conditions of insufficient oxygen which causes NO_x to decrease because of lower oxygen and lower temperatures. Derating involves restricting engine operation to lower than normal levels of power production for the given application. Derating reduces cylinder pressures and temperatures thereby lowering NO_x formation rates.[5]

SCR is an add-on NO_x control placed in the exhaust stream following the engine and involves injecting ammonia (NH_3) into the flue gas. The NH_3 reacts with the NO_x in the presence of a catalyst to form water and nitrogen. The effectiveness of SCR depends on fuel quality and engine duty cycle (load fluctuations). Contaminants in the fuel may poison or mask the catalyst surface causing a reduction or termination in catalyst activity. Load fluctuations can cause variations in exhaust temperature and NO_x concentration which can create problems with the effectiveness of the SCR system.[5]

NSCR is often referred to as a three-way conversion catalyst system because the catalyst reactor simultaneously reduces NO_x, CO, and HC and involves placing a catalyst in the exhaust stream of the engine. The reaction requires that the O_2 levels be kept low and that the engine be operated at fuel-rich air-to-fuel ratios.[5]

3.4.5 Updates Since the Fifth Edition

The Fifth Edition was released in January 1995. Revisions to this section since that date are summarized below. For further detail, consult the memoranda describing each supplement or the background report for this section. These and other documents can be found on the CHIEF electronic bulletin board (919-541-5742), or on the new EFIG home page (http://www.epa.gov/oar/oaqps/efig/).

Supplement A, February 1996

No changes.

Supplement B, October 1996

- The general text was updated.
- Controlled NO_x factors and PM factors were added for diesel units.
- Math errors were corrected in factors for CO from diesel units and for uncontrolled NO_x from dual fueled units.

Table 3.4-1. GASEOUS EMISSION FACTORS FOR LARGE STATIONARY DIESEL AND ALL STATIONARY DUAL-FUEL ENGINES[a]

Pollutant	Diesel Fuel (SCC 2-02-004-01)			Dual Fuel[b] (SCC 2-02-004-02)		
	Emission Factor (lb/hp-hr) (power output)	Emission Factor (lb/MMBtu) (fuel input)	EMISSION FACTOR RATING	Emission Factor (lb/hp-hr) (power output)	Emission Factor (lb/MMBtu) (fuel input)	EMISSION FACTOR RATING
NO_x						
Uncontrolled	0.024	3.2	B	0.018	2.7	D
Controlled	0.013[c]	1.9[c]	B	ND	ND	NA
CO	5.5 E-03	0.85	C	7.5 E-03	1.16	D
SO_x[d]	8.09 E-03S_1	1.01S_1	B	4.06 E-04S_1 + 9.57 E-03S_2	0.05S_1 + 0.895S_2	B
CO_2[e]	1.16	165	B	0.772	110	B
PM	0.0007[c]	0.1[c]	B	ND	ND	NA
TOC (as CH_4)	7.05 E-04	0.09	C	5.29 E-03	0.8	D
Methane	f	f	E	3.97 E-03	0.6	E
Nonmethane	f	f	E	1.32 E-03	0.2[g]	E

[a] Based on uncontrolled levels for each fuel, from References 2,6-7. When necessary, the average heating value of diesel was assumed to be 19,300 Btu/lb with a density of 7.1 lb/gallon. The power output and fuel input values were averaged independently from each other, because of the use of actual brake-specific fuel consumption (BSFC) values for each data point and of the use of data possibly sufficient to calculate only 1 of the 2 emission factors (e. g., enough information to calculate lb/MMBtu, but not lb/hp-hr). Factors are based on averages across all manufacturers and duty cycles. The actual emissions from a particular engine or manufacturer could vary considerably from these levels. To convert from lb/hp-hr to kg/kw-hr, multiply by 0.608. To convert from lb/MMBtu to ng/J, multiply by 430. SCC = Source Classification Code.

[b] Dual fuel assumes 95% natural gas and 5% diesel fuel.

[c] References 8-26. Controlled NO_x is by ignition timing retard.

[d] Assumes that all sulfur in the fuel is converted to SO_2. S_1 = % sulfur in fuel oil; S_2 = % sulfur in natural gas. For example, if sulfer content is 1.5%, then S = 1.5.

[e] Assumes 100% conversion of carbon in fuel to CO_2 with 87 weight % carbon in diesel, 70 weight % carbon in natural gas, dual-fuel mixture of 5% diesel with 95% natural gas, average BSFC of 7,000 Btu/hp-hr, diesel heating value of 19,300 Btu/lb, and natural gas heating value of 1050 Btu/scf.

[f] Based on data from 1 engine, TOC is by weight 9% methane and 91% nonmethane.

[g] Assumes that nonmethane organic compounds are 25% of TOC emissions from dual-fuel engines. Molecular weight of nonmethane gas stream is assumed to be that of methane.

Table 3.4-2. PARTICULATE AND PARTICLE-SIZING EMISSION FACTORS FOR LARGE UNCONTROLLED STATIONARY DIESEL ENGINES[a]

EMISSION FACTOR RATING: E

Pollutant	Emission Factor (lb/MMBtu) (fuel input)
Filterable particulate[b]	
< 1 μm	0.0478
< 3 μm	0.0479
< 10 μm	0.0496
Total filterable particulate	0.0620
Condensable particulate	0.0077
Total PM-10[c]	0.0573
Total particulate[d]	0.0697

[a] Based on 1 uncontrolled diesel engine from Reference 6. Source Classification Code 2-02-004-01. The data for the particulate emissions were collected using Method 5, and the particle size distributions were collected using a Source Assessment Sampling System. To convert from lb/MMBtu to ng/J, multiply by 430. PM-10 = particulate matter ≤ 10 micrometers (μm) aerometric diameter.

[b] Particle size is expressed as aerodynamic diameter.

[c] Total PM-10 is the sum of filterable particulate less than 10 μm aerodynamic diameter and condensable particulate.

[d] Total particulate is the sum of the total filterable particulate and condensable particulate.

Table 3.4-3. SPECIATED ORGANIC COMPOUND EMISSION FACTORS FOR LARGE UNCONTROLLED STATIONARY DIESEL ENGINES[a]

EMISSION FACTOR RATING: E

Pollutant	Emission Factor (lb/MMBtu) (fuel input)
Benzene[b]	7.76 E-04
Toluene[b]	2.81 E-04
Xylenes[b]	1.93 E-04
Propylene	2.79 E-03
Formaldehyde[b]	7.89 E-05
Acetaldehyde[b]	2.52 E-05
Acrolein[b]	7.88 E-06

[a]Based on 1 uncontrolled diesel engine from Reference 7. Source Classification Code 2-02-004-01. Not enough information to calculate the output-specific emission factors of lb/hp-hr. To convert from lb/MMBtu to ng/J, multiply by 430.
[b]Hazardous air pollutant listed in the *Clean Air Act*.

Table 3.4-4. PAH EMISSION FACTORS FOR LARGE UNCONTROLLED STATIONARY DIESEL ENGINES[a]

EMISSION FACTOR RATING: E

PAH	Emission Factor (lb/MMBtu) (fuel input)
Naphthalene[b]	1.30 E-04
Acenaphthylene	9.23 E-06
Acenaphthene	4.68 E-06
Fluorene	1.28 E-05
Phenanthrene	4.08 E-05
Anthracene	1.23 E-06
Fluoranthene	4.03 E-06
Pyrene	3.71 E-06
Benz(a)anthracene	6.22 E-07
Chrysene	1.53 E-06
Benzo(b)fluoranthene	1.11 E-06
Benzo(k)fluoranthene	<2.18 E-07
Benzo(a)pyrene	<2.57 E-07
Indeno(1,2,3-cd)pyrene	<4.14 E-07
Dibenz(a,h)anthracene	<3.46 E-07
Benzo(g,h,l)perylene	<5.56 E-07
TOTAL PAH	<2.12 E-04

[a] Based on 1 uncontrolled diesel engine from Reference 7. Source Classification Code 2-02-004-01. Not enough information to calculate the output-specific emission factors of lb/hp-hr. To convert from lb/MMBtu to ng/J, multiply by 430.

[b] Hazardous air pollutant listed in the *Clean Air Act*.

Table 3.4-5. NO_x REDUCTION AND FUEL CONSUMPTION PENALTIES FOR LARGE STATIONARY DIESEL AND DUAL-FUEL ENGINES[a]

Control Approach		Diesel (SCC 2-02-004-01)		Dual Fuel (SCC 2-02-004-02)	
		NO_x Reduction (%)	ΔBSFC[b] (%)	NO_x Reduction (%)	ΔBSFC (%)
Derate	10%	ND	ND	<20	4
	20%	<20	4	ND	ND
	25%	5 - 23	1 - 5	1 - 33	1 - 7
Retard	2°	<20	4	<20	3
	4°	<40	4	<40	1
	8°	28 - 45	2 - 8	50 - 73	3 - 5
Air-to-fuel	3%	ND	ND	<20	0
	±10%	7 - 8	3	25 - 40	1 - 3
Water injection (H_2O/fuel ratio)	50%	25 - 35	2 - 4	ND	ND
SCR		80 - 95	0	80 - 95	0

[a] References 1,27-28. The reductions shown are typical and will vary depending on the engine and duty cycle. SCC = Source Classification Code. ΔBSFC = change in brake-specific fuel consumption. ND = no data.

References For Section 3.4

1. H. I. Lips, *et al.*, *Environmental Assessment Of Combustion Modification Controls For Stationary Internal Combustion Engines*, EPA-600/7-81-127, U. S. Environmental Protection Agency, Cincinnati, OH, July 1981.

2. *Standards Support And Environmental Impact Statement, Volume I: Stationary Internal Combustion Engines*, EPA-450/2-78-125a, U. S. Environmental Protection Agency, Research Triangle Park, NC, July 1979.

3. M. Hoggan, et. al., *Air Quality Trends in California's South Coast and Southeast Desert Air Basins, 1976-1990*, "Air Quality Management Plan, Appendix II-B", South Coast Air Quality Management District, July 1991.

4. *Limiting Net Greenhouse Gas Emissions In the United States, Volume II: Energy Responses*, report for the Office of Environmental Analysis, Office of Policy, Planning and Analysis, Department of Energy (DDE), DOE/PE-0101 Volume II, September 1991.

5. Snyder, R. B., *Alternative Control Techniques Document—NO_x Emissions from Stationary Reciprocating Internal Combustion Engines*, EPA-453/R-93-032, U. S. Environmental Protection Agency, Research Triangle Park, July 1993.

6. C. Castaldini, *Environmental Assessment Of NO_x Control On A Compression Ignition Large Bore Reciprocating Internal Combustion Engine, Volume I: Technical Results*, EPA-600/7-86/001a, U. S. Environmental Protection Agency, Cincinnati, OH, April 1984.

7. *Pooled Source Emission Test Report: Oil And Gas Production Combustion Sources, Fresno And Ventura Counties, California*, ENSR # 7230-007-700, Western States Petroleum Association, Bakersfield, CA, December 1990.

8. *Final Report For An Emission Compliance Test Program On Two Standby Generators Located At American Car Company*, Greenwich, CT, York Services Corp., 1987.

9. *Final Report For An Emission Compliance Test Program On A Standby Diesel Generator At South Central Connecticut Regional Water Authority*, West Haven, CT, York Services Corp., 1988.

10. *Air Emission From Stationary Diesel Engines For The Alaska Rural Electric Cooperative Association*, Environmetrics, 1992.

11. *Compliance Test Report For Particulate Emissions From A Caterpillar Diesel Generator*, St. Mary's Hospital, Waterburg, CT, TRC Environmental Consultants, 1987.

12. *Compliance Measured Particulate Emissions From An Emergency Diesel Generator, Silorsky Aircraft, United Technologies*, Stratford, CT, TRC Environmental Consultants, 1987.

13. *Compliance Test Report For Particulate Emissions From A Cummins Diesel Generator*, Colonial Gold Limited Partnership, Hartford, CT, TRC Environmental Consultants, 1988.

14. *Compliance Test Report For Particulate Emissions From A Cummins Diesel Generator*, CIGNA Insurance Company, Bloomfield, CT, TRC Environmental Consultants, 1988.

15. *Compliance Test Report For Particulate Emission From A Waukesha Diesel Generator*, Bristol Meyers, Wallinsford, CT, TRC Environmental Consultants, 1987.

16. *Compliance Test Report For Particulate Emissions From A Cummins Diesel Generator*, Connecticut General Life Insurance, Windsor, CT, TRC Environmental Consultants, 1987.

17. *Compliance Measured Particulate Emissions From An Emergency Diesel Generator*, Danbury Hospital, Danbury, CT, TRC Environmental Consultants, 1988.

18. *Compliance Test Report For Particulate Emissions From A Caterpillar Diesel Generator*, Colonial Metro Limited Partnership, Hartford, CT, TRC Environmental Consultants, 1988.

19. *Compliance Test Report For Particulate Emissions From A Caterpillar Diesel Generator*, Boehringer -Ingelheim Pharmaceuticals, Danbury, CT, TRC Environmental Consultants, 1988.

20. *Compliance Test Report For Emissions Of Particulate From An Emergency Diesel Generator*, Meriden - Wallingford Hospital, Meriden, CT, TRC Environmental Consultants, 1987.

21. *Compliance Test Report Johnson Memorial Hospital Emergency Generator Exhaust Stack*, Stafford Springs, CT, ROJAC Environmental Services, 1987.

22. *Compliance Test Report Union Carbide Corporation Generator Exhaust Stack*, Danbury, CT, ROJAC Environmental Services, 1988.

23. *Compliance Test Report Hartford Insurance Company Emergency Generator Exhaust Stack*, Bloomfield, CT, ROJAC Environmental Services, 1987.

24. *Compliance Test Report Hartford Insurance Group Emergency Generator Exhaust Stack*, Hartford, CT, ROJAC Environmental Services, 1987.

25. *Compliance Test Report Southern New England Telephone Company Emergency Generator Exhaust Stack*, North Haven, CT, ROJAC Environmental Services, 1988.

26. *Compliance Test Report Pfizer, Inc. Two Emergency Generator Exhaust Stacks*, Groton, CT, ROJAC Environmental Services, 1987.

27. L. M. Campbell, *et al.*, *Sourcebook: NO_x Control Technology Data, Control Technology Center*, EPA-600/2-91-029, U. S. Environmental Protection Agency, Cincinnati, OH, July 1991.

28. *Catalysts For Air Pollution Control*, Manufacturers Of Emission Controls Association (MECA), Washington, DC, March 1992.

4. EVAPORATION LOSS SOURCES

Evaporation losses include the organic solvents emitted from dry cleaning plants, surface coating operations, and degreasing operations. This chapter presents the volatile organic emissions from these sources. Where possible, the effect is shown of controls to reduce the emissions of organic compounds.

4.1 Dry Cleaning

4.1.1 General[1,2]

Dry cleaning involves the cleaning of fabrics with nonaqueous organic solvents. The dry cleaning process requires 3 steps: (1) washing the fabric in solvent, (2) spinning to extract excess solvent, and (3) drying by tumbling in a hot air stream.

Two general types of cleaning fluids are used in the industry, petroleum solvents and synthetic solvents. Petroleum solvents, such as Stoddard or 140-F, are inexpensive combustible hydrocarbon mixtures similar to kerosene. Operations using petroleum solvents are known as petroleum plants. Synthetic solvents are nonflammable but more expensive halogenated hydrocarbons. Perchloroethylene and trichlorotrifluoroethane are the 2 synthetic dry cleaning solvents presently in use. Operations using these synthetic solvents are respectively called "perc" plants and fluorocarbon plants.

There are 2 basic types of dry cleaning machines, transfer and dry-to-dry. Transfer machines accomplish washing and drying in separate machines. Usually, the washer extracts excess solvent from the clothes before they are transferred to the dryer, but some older petroleum plants have separate extractors for this purpose. Dry-to-dry machines are single units that perform all of the washing, extraction, and drying operations. All petroleum solvent machines are the transfer type, but synthetic solvent plants can be either type.

The dry cleaning industry can be divided into 3 sectors: coin-operated facilities, commercial operations, and industrial cleaners. Coin-operated facilities are usually part of a laundry supplying "self-service" dry cleaning for consumers. Only synthetic solvents are used in coin operated dry cleaning machines. Such machines are small, with a capacity of 3.6 to 11.5 kg (8 to 25 lb) of clothing.

Commercial operations, such as small neighborhood or franchise dry cleaning shops, clean soiled apparel for the consumer. Generally, perchloroethylene and petroleum solvents are used in commercial operations. A typical "perc" plant operates a 14 to 27 kg (30 to 60 lb) capacity washer/extractor and an equivalent size reclaiming dryer.

Industrial cleaners are larger dry cleaning plants which supply rental service of uniforms, mats, mops, etc., to businesses or industries. Perchloroethylene is used by approximately 50 percent of the industrial dry cleaning establishments. A typical large industrial cleaner has a 230 kg (500 lb) capacity washer/extractor and 3 to 6 38-kg (100-lb) capacity dryers.

A typical perc plant is shown in Figure 4.1-1. Although 1 solvent tank may be used, the typical perc plant uses 2 tanks for washing. One tank contains pure solvent, and the other contains "charged" solvent (used solvent to which small amounts of detergent have been added to aid in cleaning). Generally, clothes are cleaned in charged solvent and rinsed in pure solvent. A water bath may also be used.

After the clothes have been washed, the used solvent is filtered, and part of the filtered solvent is returned to the charged solvent tank for washing the next load. The remaining solvent is then distilled to remove oils, fats, greases, etc., and is returned to the pure solvent tank. The

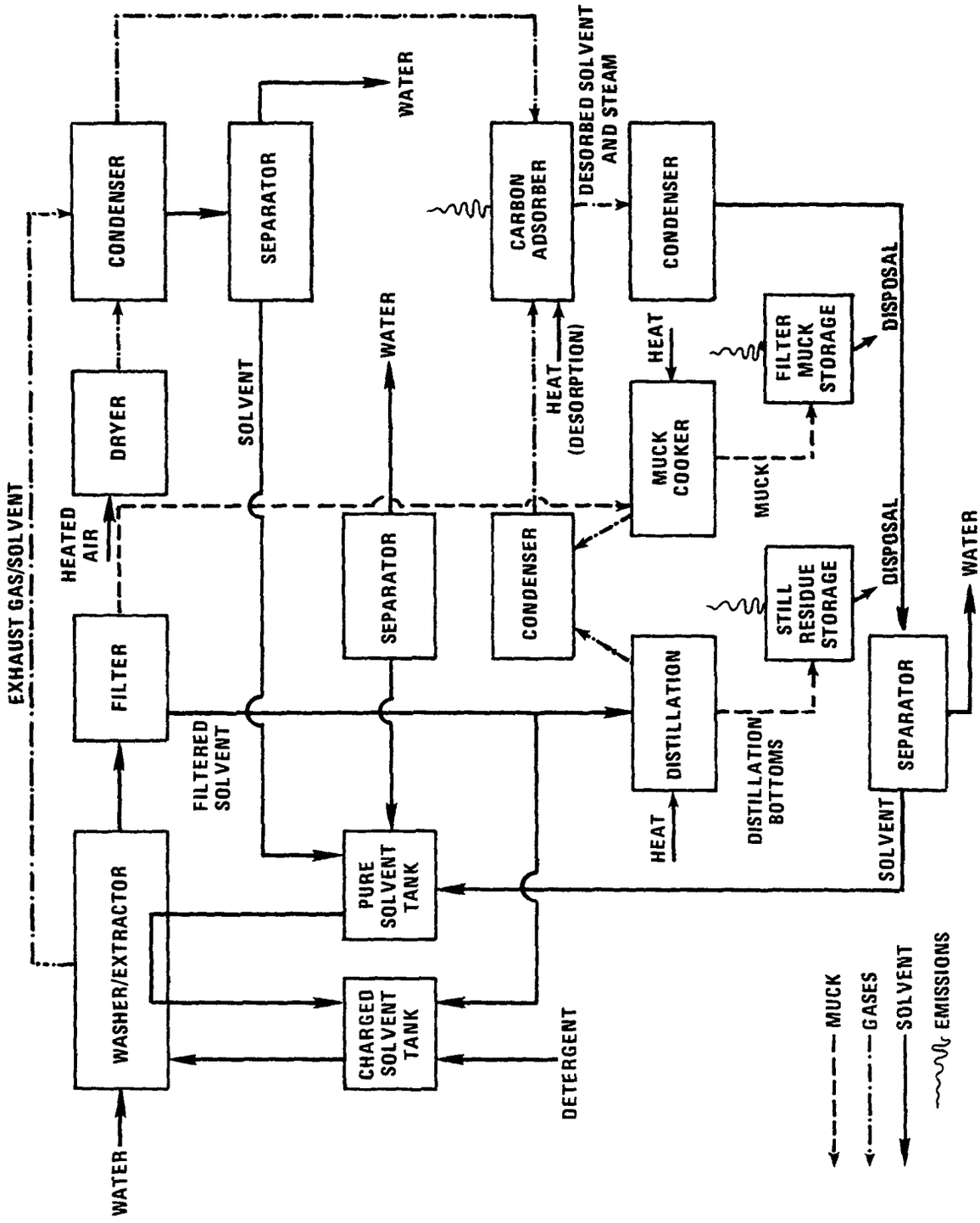

Figure 4.1-1. Perchloroethylene dry cleaning plant flow diagram.

collected solids (muck) are usually removed from the filter once a day. Before disposal, the muck may be "cooked" to recover additional solvent. Still and muck cooker vapors are vented to a condenser and separator, where more solvent is reclaimed. In many perc plants, the condenser offgases are vented to a carbon adsorption unit for additional solvent recovery.

After washing, the clothes are transferred to the dryer to be tumbled in a heated air stream. Exhaust gases from the dryer, along with a small amount of exhaust gases from the washer/extractor, are vented to a water-cooled condenser and water separator. Recovered solvent is returned to the pure solvent storage tank. In 30 to 50 percent of the perc plants, the condenser offgases are vented to a carbon adsorption unit for additional solvent recovery. To reclaim this solvent, the unit must be periodically desorbed with steam, usually at the end of each day. Desorbed solvent and water are condensed and separated, and recovered solvent is returned to the pure solvent tank.

A petroleum plant would differ from Figure 4.1-1 chiefly in that there would be no recovery of solvent from the washer and dryer and no muck cooker. A fluorocarbon plant would differ in that an unvented refrigeration system would be used in place of a carbon adsorption unit. Another difference is that a typical fluorocarbon plant could use a cartridge filter which is drained and disposed of after several hundred cycles.

4.1.2 Emissions And Controls[1-3]

The solvent itself is the primary emission from dry cleaning operations. Solvent is given off by washer, dryer, solvent still, muck cooker, still residue, and filter muck storage areas, as well as by leaky pipes, flanges, and pumps.

Petroleum plants have not generally employed solvent recovery, because of the low cost of petroleum solvents and the fire hazards associated with collecting vapors. Some emission control, however, can be obtained by maintaining all equipment (e. g., preventing lint accumulation, solvent leakage, etc.) and by using good operating practices (e. g., not overloading machinery). Both carbon adsorption and incineration appear to be technically feasible controls for petroleum plants, but costs are high.

Solvent recovery is necessary in perc plants due to the higher cost of perchloroethylene. As shown in Figure 4.1-1, recovery is effected on the washer, dryer, still, and muck cooker through the use of condensers, water/solvent separators and carbon adsorption units. Typically once a day, solvent in the carbon adsorption unit is desorbed with steam, condensed, separated from the condensed water, and returned to the pure solvent storage tank. Residual solvent emitted from treated distillation bottoms and muck is not recovered. As in petroleum plants, good emission control can be obtained by good housekeeping (maintaining all equipment and using good operating practices).

All fluorocarbon machines are of the dry-to-dry variety to conserve solvent vapor, and all are closed systems with built in solvent recovery. High emissions can occur, however, as a result of poor maintenance and operation of equipment. Refrigeration systems are installed on newer machines to recover solvent from the washer/dryer exhaust gases.

Emission factors for dry cleaning operations are presented in Table 4.1-1.

Typical coin-operated and commercial plants emit less than 10^6 grams (1 ton) per year. Some applications of emission estimates are too broad to identify every small facility. For estimates over large areas, the factors in Table 4.1-2 may be applied for coin-operated and commercial dry cleaning emissions.

Table 4.1-1 (Metric And English Units). SOLVENT LOSS EMISSION FACTORS FOR DRY CLEANING OPERATIONS

EMISSION FACTOR RATING: B

Solvent Type (Process Used)	Source	Emission Rate[a]	
		Typical System, kg/100 kg (lb/100 lb)	Well-Controlled System, kg/100 kg (lb/100 lb)
Petroleum	Washer/dryer[b]	18	2[c]
(transfer process)	Filter disposal		
	Uncooked (drained)	8	
	Centrifuged		0.5 - 1
	Still residue disposal	1	0.5 - 1
	Miscellaneous[d]	1	1
Perchloroethylene	Washer/dryer/still/muck cooker	8[c]	0.3[c]
(transfer process)	Filter disposal		
	Uncooked muck	14	
	Cooked muck	1.3	0.5 - 1.3
	Cartridge filter	1.1	0.5 - 1.1
	Still residue disposal	1.6	0.5 - 1.6
	Miscellaneous[d]	1.5	1
Trichlorotrifluoroethane	Washer/dryer/still[f]	0	0
(dry-to-dry process)	Cartridge filter disposal	1	1
	Still residue disposal	0.5	0.5
	Miscellaneous[d]	1 - 3	1 - 3

Table 4.1-1 (cont.).

[a] References 1-4. Units are in terms of weight solvent per weight of clothes cleaned (capacity x loads). Emissions also may be estimated by determining the amount of solvent consumed. Assuming that all solvent input is eventually evaporated to the atmosphere, an emission factor of 1000 kg/Mg (2000 lb/ton) of solvent consumed can be applied.

[b] Different materials in wash retain a different amount of solvent (synthetics, 10 kg/100 kg [10 lb/100 lb]; cotton, 20 kg/100 kg [20 lb/100 lb]; leather, 40 kg/100 kg [40 lb/100 lb]).

[c] Emissions from washer, dryer, still, and muck cooker are passed collectively through a carbon adsorber.

[d] Miscellaneous sources include fugitives from flanges, pumps, pipes, and storage tanks, and fixed losses such as opening and closing dryers, etc.

[e] Uncontrolled emissions from washer, dryer, still, and muck cooker average about 8 kg/100 kg (8 lb/100 lb). About 15% of solvent emitted is from washer, 75% dryer, 5% each from still and muck cooker.

[f] Based on the typical refrigeration system installed in fluorocarbon plants.

Table 4.1-2 (Metric And English Units). PER CAPITA SOLVENT LOSS EMISSION FACTORS FOR DRY CLEANING PLANTS[a]

EMISSION FACTOR RATING: B

Operation	Emission Factors	
	kg/yr/capita (lb/year/cap)	g/day/capita[b] (lb/day/cap)
Commercial	0.6 (1.3)	1.9 (0.004)
Coin-operated	0.2 (0.4)	0.6 (0.001)

[a] References 2-4. All nonmethane VOC.
[b] Assumes a 6-day operating week (313 days/yr).

References For Section 4.1

1. *Study To Support New Source Performance Standards For The Dry Cleaning Industry*, EPA Contract No. 68-02-1412, TRW, Inc., Vienna, VA, May 1976.

2. *Perchloroethylene Dry Cleaners — Background Information For Proposed Standards*, EPA-450/3-79-029a, U. S. Environmental Protection Agency, Research Triangle Park, NC, August 1980.

3. *Control Of Volatile Organic Emissions From Perchloroethylene Dry Cleaning Systems*, EPA-450/2-78-050, U. S. Environmental Protection Agency, Research Triangle Park, NC, December 1978.

4. *Control Of Volatile Organic Emissions From Petroleum Dry Cleaners (Draft)*, Office Of Air Quality Planning And Standards, U. S. Environmental Protection Agency, Research Triangle Park, NC, February 1981.

4.2 Surface Coating

Surface coating operations involve the application of paint, varnish, lacquer, or paint primer, for decorative or protective purposes. This is accomplished by brushing, rolling, spraying, flow coating, and dipping operations. Some industrial surface coating operations include automobile assembly, job enameling, and manufacturing of aircraft, containers, furniture, appliances, and plastic products. Nonindustrial applications of surface coatings include automobile refinishing and architectural coating of domestic, industrial, government, and institutional structures, including building interiors and exteriors and exteriors and signs and highway markings. Nonindustrial Surface Coating is discussed below in Section 4.2.1, and Industrial Surface Coating in Section 4.2.2.

Emissions of volatile organic compounds (VOC) occur in surface coating operations because of evaporation of the paint vehicle, thinner, or solvent used to facilitate the application of coatings. The major factor affecting these emissions is the amount of volatile matter contained in the coating. The volatile portion of most common surface coatings averages about 50 percent, and most, if not all, of this is emitted during the application of coatings. The compounds released include aliphatic and aromatic hydrocarbons, alcohols, ketones, esters, alkyl and aryl hydrocarbon solvents, and mineral spirits. Table 4.2-1 presents emission factors for general surface coating operations.

Table 4.2-1 (Metric And English Units). EMISSION FACTORS FOR GENERAL SURFACE COATING APPLICATIONS[a]

EMISSION FACTOR RATING: B

Coating Type	VOC Emissions	
	kg/Mg	lb/ton
Paint	560	1,120
Varnish and shellac	500	1,000
Lacquer	770	1,540
Enamel	420	840
Primer (zinc chromate)	660	1,320

[a] References 1-2.

References For Section 4.2

1. *Products Finishing*, *41*(6A):4-54, March 1977.

2. *Air Pollution Engineering Manual*, Second Edition, AP-40, U. S. Environmental Protection Agency, Research Triangle Park, NC, May 1973. Out of Print.

4.2.1 Nonindustrial Surface Coating[1,3,5]

Nonindustrial surface coating operations are nonmanufacturing applications of surface coating. Two major categories are architectural surface coating and automobile refinishing. Architectural surface coating is considered to involve both industrial and nonindustrial structures. Automobile refinishing pertains to the painting of damaged or worn highway vehicle finishes and not to the painting of vehicles during manufacture.

Emissions from coating a single architectural structure or an automobile are calculated by using total volume and content and specific application. To estimate emissions for a large geographical area which includes many major and minor applications of nonindustrial surface coatings requires that area source estimates be developed. Architectural surface coating and auto refinishing emissions data are often difficult to compile for a large geographical area. In cases where a large emissions inventory is being developed and/or where resources are unavailable for detailed accounting of actual coatings volume for these applications, emissions may be assumed proportional to population or to number of employees in the activity. Table 4.2.1-1 presents factors from national emission data and gives emissions per population or employee for architectural surface coating and automobile refinishing.

Table 4.2.1-1 (Metric And English Units). NATIONAL EMISSIONS AND EMISSION FACTORS FOR VOC FROM ARCHITECTURAL SURFACE COATING AND AUTOMOBILE REFINISHING[a]

EMISSION FACTOR RATING: C

Emissions	Architectural Surface Coating	Automobile Refinishing
National		
Mg/yr (ton/yr)	446,000 (491,000)	181,000 (199,000)
Per capita		
kg/yr (lb/yr)	2.09 (4.6)	0.84 (1.9)
g/day (lb/day)	5.8 (0.013)[b]	2.7 (0.006)[c]
Per employee		
Mg/yr (ton/yr)	ND	2.3 (2.6)
kg/day (lb/day)	ND	7.4 (16.3)[c]

[a] References 3,5-8. All nonmethane organics. ND = no data.
[b] Reference 8. Calculated by dividing kg/yr (lb/yr) by 365 days and converting to appropriate units.
[c] Assumes a 6-day operating week (312 days/yr).

Using waterborne architectural coatings reduces VOC emissions. Current consumption trends indicate increasing substitution of waterborne architectural coatings for those using solvent. Automobile refinishing often is done in areas only slightly enclosed, which makes emissions control

difficult. Where automobile refinishing takes place in an enclosed area, control of the gaseous emissions can be accomplished by the use of adsorbers (activated carbon) or afterburners. The collection efficiency of activated carbon has been reported at 90 percent or greater. Water curtains or filler pads have little or no effect on escaping solvent vapors, but they are widely used to stop paint particulate emissions.

References For Section 4.2.1

1. *Air Pollution Engineering Manual*, Second Edition, AP-40, U. S. Environmental Protection Agency, Research Triangle Park, NC, May 1973. Out of Print.

2. *Control Techniques For Hydrocarbon And Organic Gases From Stationary Sources*, AP-68, U. S. Environmental Protection Agency, Research Triangle Park, NC, October 1969.

3. *Control Techniques Guideline For Architectural Surface Coatings (Draft)*, Office Of Air Quality Planning And Standards, U. S. Environmental Protection Agency, Research Triangle Park, NC, February 1979.

4. *Air Pollutant Emission Factors*, HEW Contract No. CPA-22-69-119, Resources Research Inc., Reston, VA, April 1970.

5. *Procedures For The Preparation Of Emission Inventories For Volatile Organic Compounds, Volume I*, Second Edition, EPA-450/2-77-028, U. S. Environmental Protection Agency, Research Triangle Park, NC, September 1980.

6. W. H. Lamason, "Technical Discussion Of Per Capita Emission Factors For Several Area Sources Of Volatile Organic Compounds", Technical Support Division, U. S. Environmental Protection Agency, Research Triangle Park, NC, March 15, 1981. Unpublished.

7. *End Use Of Solvents Containing Volatile Organic Compounds*, EPA-450/3-79-032, U. S. Environmental Protection Agency, Research Triangle Park, NC, May 1979.

8. Written communications between Bill Lamason and Chuck Mann, Technical Support Division, U. S. Environmental Protection Agency, Research Triangle Park, NC, October 1980, and March 1981.

4.2.2 Industrial Surface Coating

4.2.2.1 General Industrial Surface Coatings

4.2.2.2 Can Coating

4.2.2.3 Magnet Wire Coating

4.2.2.4 Other Metal Coating

4.2.2.5 Flat Wood Interior Panel Coating

4.2.2.6 Paper Coating

4.2.2.7 Polymeric Coating Of Supporting Substrates

4.2.2.8 Automobile And Light Duty Truck Surface Coating Operations

4.2.2.9 Pressure Sensitive Tapes And Labels

4.2.2.10 Metal Coil Surface Coating

4.2.2.11 Large Appliance Surface Coating

4.2.2.12 Metal Furniture Surface Coating

4.2.2.13 Magnetic Tape Manufacturing

4.2.2.14 Surface Coating Of Plastic Parts For Business Machines

4.2.2.1 General Industrial Surface Coating[1-4]

4.2.2.1.1 Process Description

Surface coating is the application of decorative or protective materials in liquid or powder form to substrates. These coatings normally include general solvent type paints, varnishes, lacquers, and water thinned paints. After application of coating by 1 of a variety of methods such as brushing, rolling, spraying, dipping and flow coating, the surface is air and/or heat dried to remove the volatile solvents from the coated surface. Powder type coatings can be applied to a hot surface or can be melted after application and caused to flow together. Other coatings can be polymerized after application by thermal curing with infrared or electron beam systems.

Coating Operations -

There are both "toll" ("independent") and "captive" surface coating operations. Toll operations fill orders to various manufacturer specifications, and thus change coating and solvent conditions more frequently than do captive companies, which fabricate and coat products within a single facility and which may operate continuously with the same solvents. Toll and captive operations differ in emission control systems applicable to coating lines, because not all controls are technically feasible in toll situations.

Coating Formulations -

Conventional coatings contain at least 30 volume percent solvents to permit easy handling and application. They typically contain 70 to 85 percent solvents by volume. These solvents may be of 1 component or of a mixture of volatile ethers, acetates, aromatics, cellosolves, aliphatic hydrocarbons, and/or water. Coatings with 30 volume percent of solvent or less are called low solvent or "high solids" coatings.

Waterborne coatings, which have recently gained substantial use, are of several types: water emulsion, water soluble and colloidal dispersion, and electrocoat. Common ratios of water to solvent organics in emulsion and dispersion coatings are 80:20 and 70:30.

Two-part catalyzed coatings to be dried, powder coatings, hot melts, and radiation cured (ultraviolet and electron beam) coatings contain essentially no volatile organic compounds (VOC), although some monomers and other lower molecular weight organics may volatilize.

Depending on the product requirements and the material being coated, a surface may have 1 or more layers of coating applied. The first coat may be applied to cover surface imperfections or to assure adhesion of the coating. The intermediate coats usually provide the required color, texture or print, and a clear protective topcoat is often added. General coating types do not differ from those described, although the intended use and the material to be coated determine the composition and resins used in the coatings.

Coating Application Procedures -

Conventional spray, which is air atomized and usually hand operated, is 1 of the most versatile coating methods. Colors can be changed easily, and a variety of sizes and shapes can be painted under many operating conditions. Conventional, catalyzed, or waterborne coatings can be applied with little modification. The disadvantages are low efficiency from overspray and high energy requirements for the air compressor.

In hot airless spray, the paint is forced through an atomizing nozzle. Since volumetric flow is less, overspray is reduced. Less solvent is also required, thus reducing VOC emissions. Care must be taken for proper flow of the coating, to avoid plugging and abrading of the nozzle orifice. Electrostatic spray is most efficient for low viscosity paints. Charged paint particles are attracted to an oppositely charged surface. Spray guns, spinning discs, or bell shaped atomizers can be used to atomize the paint. Application efficiencies of 90 to 95 percent are possible, with good "wraparound" and edge coating. Interiors and recessed surfaces are difficult to coat, however.

Roller coating is used to apply coatings and inks to flat surfaces. If the cylindrical rollers move in the same direction as the surface to be coated, the system is called a direct roll coater. If they rotate in the opposite direction, the system is a reverse roll coater. Coatings can be applied to any flat surface efficiently and uniformly and at high speeds. Printing and decorative graining are applied with direct rollers. Reverse rollers are used to apply fillers to porous or imperfect substrates, including papers and fabrics, to give a smooth uniform surface.

Knife coating is relatively inexpensive, but it is not appropriate for coating unstable materials, such as some knit goods, or when a high degree of accuracy in the coating thickness is required.

Rotogravure printing is widely used in coating vinyl imitation leathers and wallpaper, and in the application of a transparent protective layer over the printed pattern. In rotogravure printing, the image area is recessed, or "intaglio", relative to the copper plated cylinder on which the image is engraved. The ink is picked up on the engraved area, and excess ink is scraped off the nonimage area with a "doctor blade". The image is transferred directly to the paper or other substrate, which is web fed, and the product is then dried.

Dip coating requires that the surface of the subject be immersed in a bath of paint. Dipping is effective for coating irregularly shaped or bulky items and for priming. All surfaces are covered, but coating thickness varies, edge blistering can occur, and a good appearance is not always achieved.

In flow coating, materials to be coated are conveyed through a flow of paint. Paint flow is directed, without atomization, toward the surface through multiple nozzles, then is caught in a trough and recycled. For flat surfaces, close control of film thickness can be maintained by passing the surface through a constantly flowing curtain of paint at a controlled rate.

4.2.2.1.2 Emissions And Controls

Essentially all of the VOC emitted from the surface coating industry is from the solvents which are used in the paint formulations, used to thin paints at the coating facility, or used for cleanup. All unrecovered solvent can be considered potential emissions. Monomers and low molecular weight organics can be emitted from those coatings that do not include solvents, but such emissions are essentially negligible.

Emissions from surface coating for an uncontrolled facility can be estimated by assuming that all VOC in the coatings is emitted. Usually, coating consumption volume will be known, and some information about the types of coatings and solvents will be available. The choice of a particular emission factor will depend on the coating data available. If no specific information is given for the coating, it may be estimated from the data in Table 4.2.2.1-1.

All solvents separately purchased as solvent that are used in surface coating operations and are not recovered subsequently can be considered potential emissions. Such VOC emissions at a facility can result from onsite dilution of coatings with solvent, from "makeup solvents" required in flow

Table 4.2.2.1-1 (Metric And English Units). VOC EMISSION FACTORS FOR UNCONTROLLED SURFACE COATING[a]

EMISSION FACTOR RATING: B

Available Information On Coating	Emissions Of VOC[b] kg/liter Of Coating Or lb/gal Of Coating[c]
Conventional or waterborne paints:	
VOC, wt % (d)	d • (coating density)/100
or	
VOC, vol % (V)	V • (solvent density)/100
Waterborne paint:	
X = VOC as wt % of total volatiles including water; and d = total volatiles as wt % of coating	d • X • (coating density)/100
or	
Y = VOC as vol % of total volatiles including water; and V = total volatiles as vol % of coating	V • Y • (solvent density)/100

[a] Based on material balance, assuming entire VOC content is emitted.

[b] For special purposes, factors expressed in kg per liter of coating less water may be desired. These can be computed as follows:

$$\frac{\text{kg per liter of coating}}{1 - (\text{vol \% water}/100)} = \text{kg per liter of coating less water}$$

[c] If coating density is not known, typical densities are given in Table 4.2.2.1-2. If solvent density is not known, the average density of solvent in coatings is 0.88 kg/L (7.36 lb/gal).

coating and, in some instances, dip coating, and from the solvents used for cleanup. Makeup solvents are added to coatings to compensate for standing losses, concentration or amount, and thus to bring the coating back to working specifications. Solvent emissions should be added to VOC emissions from coatings to get total emissions from a coating facility.

Typical ranges of control efficiencies are given in Table 4.2.2.1-3. Emission controls normally fall under 1 of 3 categories: modification in paint formula, process changes, or add-on controls. These are discussed further in the specific subsections that follow.

Table 4.2.2.1-2 (Metric And English Units). TYPICAL DENSITIES AND SOLIDS CONTENTS OF COATINGS[a]

Type Of Coating	Density		Solids (Volume %)
	kg/L	lb/gal	
Enamel, air dry	0.91	7.6	39.6
Enamel, baking	1.09	9.1	42.8
Acrylic enamel	1.07	8.9	30.3
Alkyd enamel	0.96	8.0	47.2
Primer surfacer	1.13	9.4	49.0
Primer, epoxy	1.26	10.5	57.2
Varnish, baking	0.79	6.6	35.3
Lacquer, spraying	0.95	7.9	26.1
Vinyl, roller coat	0.92	7.7	12.0
Polyurethane	1.10	9.2	31.7
Stain	0.88	7.3	21.6
Sealer	0.84	7.0	11.7
Magnet wire enamel	0.94	7.8	25.0
Paper coating	0.92	7.7	22.0
Fabric coating	0.92	7.7	22.0

[a] Reference 1.

Table 4.2.2.1-3. CONTROL EFFICIENCIES FOR SURFACE COATING OPERATIONS[a]

Control Option	Reduction[b] (%)
Substitute waterborne coatings	60 - 95
Substitute low solvent coatings	40 - 80
Substitute powder coatings	92 - 98
Add afterburners/incinerators	95

[a] References 2-4.
[b] Expressed as % of total uncontrolled emission load.

References For Section 4.2.2.1

1. *Controlling Pollution From the Manufacturing And Coating Of Metal Products: Metal Coating Air Pollution Control*, EPA-625/3-77-009, U. S. Environmental Protection Agency, Cincinnati, OH, May 1977.

2. H. R. Powers, "Economic And Energy Savings Through Coating Selection", The Sherwin-Williams Company, Chicago, IL, February 8, 1978.

3. *Air Pollution Engineering Manual*, Second Edition, AP-40, U. S. Environmental Protection Agency, Research Triangle Park, NC, May 1973. Out of Print.

4. *Products Finishing*, *41*(6A):4-54, March 1977.

4.2.2.2 Can Coating[1-4]

4.2.2.2.1 Process Description

Cans may be made from a rectangular sheet (body blank) and 2 circular ends (3-piece cans), or they can be drawn and wall ironed from a shallow cup to which an end is attached after the can is filled (2-piece cans). There are major differences in coating practices, depending on the type of can and the product packaged in it. Figure 4.2.2.2-1 depicts a 3-piece can sheet printing operation.

There are both "toll" and "captive" can coating operations. The former fill orders to customer specifications, and the latter coat the metal for products fabricated within one facility. Some can coating operations do both toll and captive work, and some plants fabricate just can ends.

Three-piece can manufacturing involves sheet coating and can fabricating. Sheet coating includes base coating and printing or lithographing, followed by curing at temperatures of up to 220°C (425°F). When the sheets have been formed into cylinders, the seam is sprayed, usually with a lacquer, to protect the exposed metal. If they are to contain an edible product, the interiors are spray coated, and the cans baked at up to 220°C (425°F).

Two-piece cans are used largely by beer and other beverage industries. The exteriors may be reverse roll coated in white and cured at 170 to 200°C (325 to 400°F). Several colors of ink are then transferred (sometimes by lithographic printing) to the cans as they rotate on a mandrel. A protective varnish may be roll coated over the inks. The coating is then cured in a single or multipass oven at temperatures of 180 to 200°C (350 to 400°F). The cans are spray coated on the interior and spray and/or roll coated on the exterior of the bottom end. A final baking at 110 to 200°C (225 to 400°F) completes the process.

4.2.2.2.2 Emissions And Controls

Emissions from can coating operations depend on composition of the coating, coated area, thickness of coat, and efficiency of application. Post-application chemical changes and nonsolvent contaminants like oven fuel combustion products may also affect the composition of emissions. All solvent used and not recovered can be considered potential emissions.

Sources of can coating VOC emissions include the coating area and the oven area of the sheet base and lithographic coating lines, the 3-piece can side seam and interior spray coating processes, and the 2-piece can coating and end sealing compound lines. Emission rates vary with line speed, can or sheet size, and coating type. On sheet coating lines, where the coating is applied by rollers, most solvent evaporates in the oven. For other coating processes, the coating operation itself is the major source. Emissions can be estimated from the amount of coating applied by using the factors in Table 4.2.2.1-1 or, if the number and general nature of the coating lines are known, from Table 4.2.2.2-1.

Incineration and the use of waterborne and low solvent coatings both reduce organic vapor emissions. Other technically feasible control options, such as electrostatically sprayed powder coatings, are not presently applicable to the whole industry. Catalytic and thermal incinerators both can be used. Primers, backers (coatings on the reverse or backside of the coil), and some waterborne low- to medium-gloss topcoats have been developed that equal the performance of organic

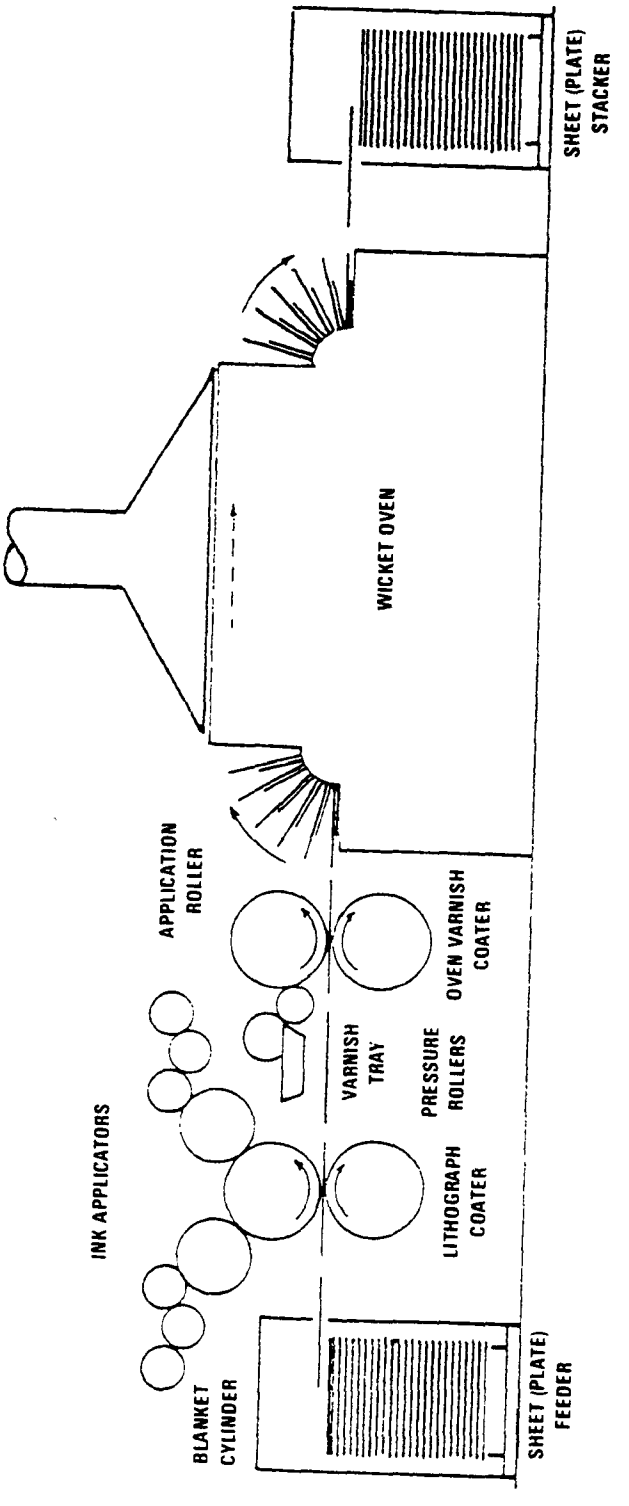

Figure 4.2.2.2-1. Three-piece can sheet printing operation.

Table 4.2.2.2-1 (Metric And English Units). VOC EMISSION FACTORS FOR CAN COATING PROCESSES[a]

EMISSION FACTOR RATING: B

Process	Typical Emissions From Coating Line[b]		Estimated Fraction From Coater Area (%)	Estimated Fraction From Oven (%)	Typical Organic Emissions[c]	
	kg/hr	lb/hr			Mg/yr	ton/yr
Three-piece can sheet base coating line	51	112	9 - 12	88 - 91	160	176
Three-piece can sheet lithographic coating line	30	65	8 - 11	89 - 92	50	55
Three-piece beer and beverage can — side seam spray coating process	5	12	100	air dried	18	20
Three-piece beer and beverage can — interior body spray coating process	25	54	75 - 85	15 - 25	80	88
Two-piece can coating line	39	86	ND	ND	260	287
Two-piece can end sealing compound line	4	8	100	air dried	14	15

[a] Reference 3. ND = no data.
[b] Organic solvent emissions will vary according to line speed, size of can or sheet being coated, and type of coating used.
[c] Based upon normal operating conditions.

solventborne coatings for aluminum but have not yet been applied at full line speed in all cases. Waterborne coatings for other metals are being developed.

Available control technology includes the use of add-on devices like incinerators and carbon adsorbers and a conversion to low solvent and ultraviolet curable coatings. Thermal and catalytic incinerators both may be used to control emissions from 3-piece can sheet base coating lines, sheet lithographic coating lines, and interior spray coating. Incineration is applicable to 2-piece can coating lines. Carbon adsorption is most acceptable to low temperature processes which use a limited number of solvents. Such processes include 2- and 3-piece can interior spray coating, 2-piece can end sealing compound lines, and 3-piece can side seam spray coating.

Low solvent coatings are not yet available to replace all the organic solventborne formulations presently used in the can industry. Waterborne basecoats have been successfully applied to 2-piece cans. Powder coating technology is used for side seam coating of noncemented 3-piece cans.

Ultraviolet curing technology is available for rapid drying of the first 2 colors of ink on 3-piece can sheet lithographic coating lines.

The efficiencies of various control technologies for can coating lines are presented in Table 4.2.2.2-2.

Table 4.2.2.2-2. CONTROL EFFICIENCIES FOR CAN COATING LINES[a]

Affected Facility[b]	Control Option	Reduction (%)[c]
Two-piece Can Lines		
Exterior coating	Thermal and catalytic incineration	90
	Waterborne and high solids coating	60 - 90
	Ultraviolet curing	≤100
Interior spraying coating	Thermal and catalytic incineration	90
	Waterborne and high solids coating	60 - 90
	Powder coating	100
	Carbon adsorption	90
Three-piece Can Lines		
Sheet coating lines		
Exterior coating	Thermal and catalytic incineration	90
	Waterborne and high solids coating	60 - 90
	Ultraviolet curing	≤100
Interior spray coating	Thermal and catalytic incineration	90
	Waterborne and high solids coating	60 - 90
Can fabricating lines		
Side seam spray coating	Waterborne and high solids coating	60 - 90
	Powder (only for uncemented seams)	100
Interior spray coating	Thermal and catalytic incineration	90
	Waterborne and high solids coating	60 - 90
	Powder (only for uncemented seams)	100
	Carbon adsorption	90
End Coating Lines		
Sealing compound	Waterborne and high solids coating	70 - 95
Sheet coating	Carbon adsorption	90
	Thermal and catalytic incineration	90
	Waterborne and high solids coating	60 - 90

[a] Reference 3.
[b] Coil coating lines consist of coaters, ovens, and quench areas. Sheet, can, and end wire coating lines consist of coaters and ovens.
[c] Compared to conventional solvent base coatings used without any added thinners.

References For Section 4.2.2.2

1. T. W. Hughes, *et al.*, *Source Assessment: Prioritization Of Air Pollution From Industrial Surface Coating Operations*, EPA-650/2-75-019a, U. S. Environmental Protection Agency, Cincinnati, OH, November 1975.

2. *Control Of Volatile Organic Emissions From Existing Stationary Sources, Volume I: Control Methods For Surface Coating Operations*, EPA-450/2-76- 028, U. S. Environmental Protection Agency, Research Triangle Park, NC, May 1977.

3. *Control Of Volatile Organic Emissions From Existing Stationary Sources, Volume II: Surface Coating Of Cans, Coils, Paper Fabrics, Automobiles, And Light Duty Trucks*, EPA-450/2-77-008, U. S. Environmental Protection Agency, Research Triangle Park, NC, May 1977.

4. *Air Pollution Control Technology Applicable To 26 Sources Of Volatile Organic Compounds*, Office Of Air Quality Planning And Standards, U. S. Environmental Protection Agency, Research Triangle Park, NC, May 27, 1977. Unpublished.

4.2.2.3 Magnet Wire Coating[1]

4.2.2.3.1 Process Description

Magnet wire coating is applying a coat of electrically insulating varnish or enamel to aluminum or copper wire used in electrical machinery. The wire is usually coated in large plants that both draw and insulate it and then sell it to electrical equipment manufacturers. The wire coating must meet rigid electrical, thermal, and abrasion specifications.

Figure 4.2.2.3-1 shows a typical wire coating operation. The wire is unwound from spools and passed through an annealing furnace. Annealing softens the wire and cleans it by burning off oil and dirt. Usually, the wire then passes through a bath in the coating applicator and is drawn through an orifice or coating die to scrape off the excess. It is then dried and cured in a 2-zone oven first at 200°C, then 430°C (400 and 806°F). Wire may pass through the coating applicator and the oven as many as 12 times to acquire the necessary thickness of coating.

4.2.2.3.2 Emissions And Controls

Emissions from wire coating operations depend on composition of the coating, thickness of coat and efficiency of application. Postapplication chemical changes, and nonsolvent contaminants such as oven fuel combustion products, may also affect the composition of emissions. All solvent used and not recovered can be considered potential emissions.

The exhaust from the oven is the most important source of solvent emissions in the wire coating plant. Emissions from the applicator are comparatively low, because a dip coating technique is used (see Figure 4.2.2.3-1).

Volatile organic compound (VOC) emissions may be estimated from the factors in Table 4.2.2.1-1, if the coating usage is known and if the coater has no controls. Most wire coaters built since 1960 do have controls, so the information in the following paragraph may be applicable. Table 4.2.2.3-1 gives estimated emissions for a typical wire coating line.

Incineration is the only commonly used technique to control emissions from wire coating operations. Since about 1960, all major wire coating designers have incorporated catalytic incinerators into their oven designs because of the economic benefits. The internal catalytic incinerator burns solvent fumes and circulates heat back into the wire drying zone. Fuel otherwise needed to operate the oven is eliminated or greatly reduced, as are costs. Essentially all solvent emissions from the oven can be directed to an incinerator with a combustion efficiency of at least 90 percent.

Ultraviolet cured coatings are available for special systems. Carbon adsorption is not practical. Use of low solvent coatings is only a potential control, because they have not yet been developed with properties that meet industry's requirements.

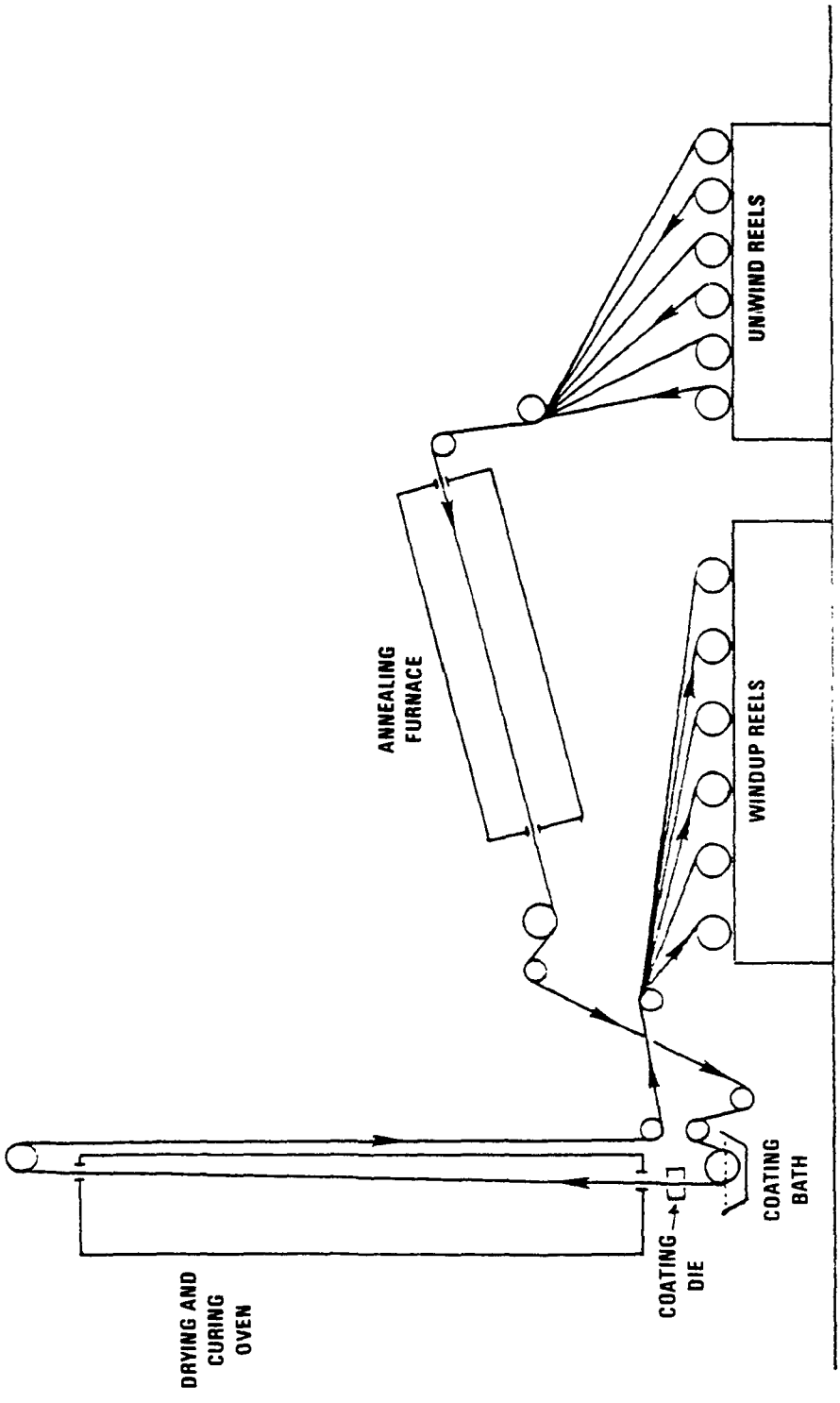

Figure 4.2.2.3-1. Wire coating line emission points.

Table 4.2.2.3-1 (Metric And English Units). ORGANIC SOLVENT EMISSIONS FROM A TYPICAL WIRE COATING LINE[a]

Coating Line[b]		Annual Totals[c]	
kg/hr	lb/hr	Mg/yr	ton/yr
12	26	84	93

[a] Reference 1.
[b] Organic solvent emissions vary from line to line by size and speed of wire, number of wires per oven, and number of passes through oven. A typical line may coat 544 kg (1,200 lb) wire/day. A plant may have many lines.
[c] Based upon normal operating conditions of 7,000 hr/yr for one line without incinerator.

References For Section 4.2.2.3

1. *Control Of Volatile Organic Emissions From Existing Stationary Sources, Volume IV: Surface Coating For Insulation Of Magnet Wire*, EPA-450/2-77-033, U. S. Environmental Protection Agency, Research Triangle Park, NC, December 1977.

2. *Controlled And Uncontrolled Emission Rates And Applicable Limitations For Eighty Processes*, EPA Contract Number 68-02-1382, TRC Of New England, Wethersfield, CT, September 1976.

4.2.2.4 Other Metal Coating[1-4]

4.2.2.4.1 Process Description

Large appliance, metal furniture, and miscellaneous metal part and product coating lines have many common operations, similar emissions and emission points, and available control technology. Figure 4.2.2.4-1 shows a typical metal furniture coating line.

Large appliances include doors, cases, lids, panels, and interior support parts of washers, dryers, ranges, refrigerators, freezers, water heaters, air conditioners, and associated products. Metal furniture includes both outdoor and indoor pieces manufactured for household, business, or institutional use. "Miscellaneous parts and products" herein denotes large and small farm machinery, small appliances, commercial and industrial machinery, fabricated metal products and other industries that coat metal under Standard Industrial Classification (SIC) codes 33 through 39.

Large Appliances -

The coatings applied to large appliances are usually epoxy, epoxy/acrylic, or polyester enamels for the primer or single coat, and acrylic enamels for the topcoat. Coatings containing alkyd resins are also used. Prime and interior single coats are applied at 25 to 36 volume percent solids. Topcoats and exterior single coats are applied at 30 to 40 volume percent. Lacquers may be used to touch up any scratches that occur during assembly. Coatings contain 2 to 15 solvents, typical of which are esters, ketones, aliphatics, alcohols, aromatics, ethers, and terpenes.

Small parts are generally dip coated, and flow or spray coating is used for larger parts. Dip and flow coating are performed in an enclosed room vented either by a roof fan or by an exhaust system adjoining the drain board or tunnel. Down or side draft booths remove overspray and organic vapors from prime coat spraying. Spray booths are also equipped with dry filters or a water wash to trap overspray.

Parts may be touched up manually with conventional or airless spray equipment. Then they are sent to a flashoff area (either open or tunneled) for about 7 minutes and are baked in a multipass oven for about 20 minutes at 180 to 230°C (350 to 450°F). At that point, large appliance exterior parts go on to the topcoat application area, and single coated interior parts are moved to the assembly area of the plant.

The topcoat, and sometimes primers, are applied by automated electrostatic disc, bell, or other types of spray equipment. Topcoats often are more than 1 color, changed by automatically flushing out the system with solvent. Both the topcoat and touchup spray areas are designed with side- or down-draft exhaust control. The parts go through about a 10-minute flashoff period, followed by baking in a multipass oven for 20 to 30 minutes at 140 to 180°C (270 to 350°F).

Metal Furniture -

Most metal furniture coatings are enamels, although some lacquers are used. The most common coatings are alkyds, epoxies, and acrylics, which contain the same solvents used in large appliance coatings, applied at about 25 to 35 percent solids.

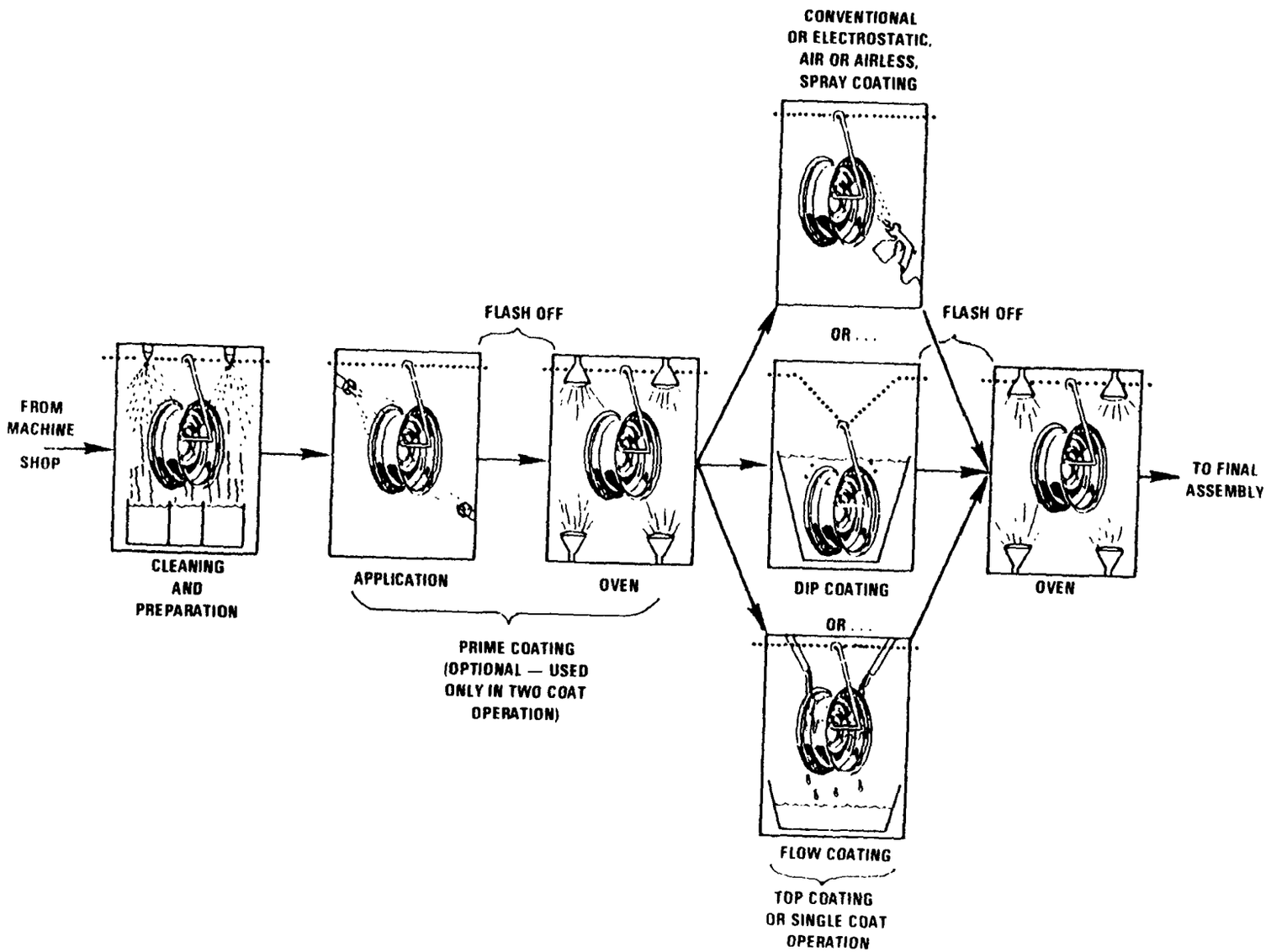

Figure 4.2.2.4-1. Metal product coating line emission points.

On a typical metal furniture coating line (see Figure 4.2.2.4-1), the prime coat can be applied with the same methods used for large appliances, but it may be cured at slightly lower temperatures, 150 to 200°C (300 to 400°F). The topcoat, usually the only coat, is applied with electrostatic spray or with conventional airless or air spray. Most spray coating is manual, in contrast to large appliance operations. Flow coating or dip coating is done, if the plant generally uses only 1 or 2 colors on a line.

The coated furniture is usually baked, but in some cases it is air dried. If it is to be baked, it passes through a flashoff area into a multizone oven at temperatures ranging from 150 to 230°C (300 to 450°F).

Miscellaneous Metal Parts And Products -

Both enamels (30 to 40 volume percent solids) and lacquers (10 to 20 volume percent solids) are used to coat miscellaneous metal parts and products, although enamels are more common. Coatings often are purchased at higher volume percent solids but are thinned before application (frequently with aromatic solvent blends). Alkyds are popular with industrial and farm machinery manufacturers. Most of the coatings contain several (up to 10) different solvents, including ketones, esters, alcohols, aliphatics, ethers, aromatics, and terpenes.

Single or double coatings are applied in conveyored or batch operations. Spraying is usually employed for single coats. Flow and dip coating may be used when only 1 or 2 colors are applied. For 2-coat operations, primers are usually applied by flow or dip coating, and topcoats are almost always applied by spraying. Electrostatic spraying is common. Spray booths and areas are kept at a slight negative pressure to capture overspray.

A manual 2-coat operation may be used for large items like industrial and farm machinery. The coatings on large products are often air dried rather than oven baked, because the machinery, when completely assembled, includes heat sensitive materials and may be too large to be cured in an oven. Miscellaneous parts and products can be baked in single or multipass ovens at 150 to 230°C (300 to 450°F).

4.2.2.4.2 Emissions And Controls

Volatile organic compounds (VOC) are emitted from application and flashoff areas and the ovens of metal coating lines (see Figure 4.2.2.4-1). The composition of emissions varies among coating lines according to physical construction, coating method, and type of coating applied, but distribution of emissions among individual operations has been assumed to be fairly constant, regardless of the type of coating line or the specific product coated, as Table 4.2.2.4-1 indicates. All solvent used can be considered potential emissions. Emissions can be calculated from the factors in Table 4.2.2.1-1 if coatings use is known, or from the factors in Table 4.2.2.4-1 if only a general description of the plant is available. For emissions from the cleansing and pretreatment area, see Section 4.6, Solvent Degreasing.

When powder coatings, which contain almost no VOC, are applied to some metal products as a coating modification, emissions are greatly reduced. Powder coatings are applied as single coats on some large appliance interior parts and as topcoat for kitchen ranges. They are also used on metal bed and chair frames, shelving, and stadium seating, and they have been applied as single coats on small appliances, small farm machinery, fabricated metal product parts, and industrial machinery components. The usual application methods are manual or automatic electrostatic spray.

Table 4.2.2.4-1 (Metric And English Units). EMISSION FACTORS FOR TYPICAL METAL COATING PLANTS[a]

EMISSION FACTOR RATING: B

Type Of Plant	Production Rate	Emissions		Estimated Emissions (%)	
		Mg/yr	ton/yr	Application And Flashoff	Ovens
Large appliances					
Prime and topcoat spray	768,000 units/yr	315	347	80	20
Metal furniture[b]					
Single spray[c]	48 x 10^6 ft^2/yr	500	550	65 - 80	20 - 35
Single dip[d]	23 x 10^6 ft^2/yr	160	176	50 - 60	40 - 50
Miscellaneous metal[b]					
Conveyor single flow[d]	16 x 10^6 ft^2/yr	111	122	50 - 60	40 - 50
Conveyor dip	16 x 10^6 ft^2/yr	111	122	40 - 50	50 - 60
Conveyor single spray[e]	16 x 10^6 ft^2/yr	200	220	70 - 80	20 - 30
Conveyor two coat, flow and spray	16 x 10^6 ft^2/yr	311	342	60 - 70	30 - 40
Conveyor two coat, dip and spray	16 x 10^6 ft^2/yr	311	342	60 - 70	30 - 40
Conveyor two coat, spray	16 x 10^6 ft^2/yr	400	440	70 - 80	20 - 30
Manual two coat, spray and air dry	8.5 x 10^6 ft^2/yr	212	223	100	0

[a] References 1-4.

[b] Estimated from area coated, assumed dry coating thickness of 1 mil, coating of 75% solvent by volume and 25% solids by volume, appropriate transfer efficiency (TE), and solvent density of 0.88 kg/liter (7.36 lb/gal). The equation to be used is:

$$E\ (\text{tons/yr}) = 2.29 \times 10^{-6}\ \text{area coated}\ (ft^2) \times \frac{V}{100 - V} \times \frac{1}{TE}$$

or

$$E\ (\text{Mg/yr}) = 2.09 \times 10^{-6}\ \text{area coated}\ (ft^2) \times \frac{V}{100 - V} \times \frac{1}{TE}$$

where V = VOC as volume %.

[c] Transfer efficiency assumed to be 60%, presuming the coater uses manual electrostatic equipment.

[d] Flow and dip coat transfer efficiencies assumed to be 90%.

[e] Transfer efficiency assumed to be 50%, presuming the coater uses electrostatic equipment but coats a wide range of product sizes and configurations.

Improving transfer efficiency is a method of reducing emissions. One such technique is the electrostatic application of the coating, and another is dip coating with waterborne paint. For example, many makers of large appliances are now using electrodeposition to apply prime coats to exterior parts and single coats to interiors, because this technique increases corrosion protection and resistance to detergents. Electrodeposition of these waterborne coatings is also being used at several metal furniture coating plants and at some farm, commercial machinery, and fabricated metal products facilities.

Automated electrostatic spraying is most efficient, but manual and conventional methods can be used, also. Roll coating is another option on some miscellaneous parts. Use of higher solids coatings is a practiced technique for reduction of VOC emissions.

Carbon adsorption is technically feasible for collecting emissions from prime, top, and single-coat applications and flashoff areas. However, the entrained sticky paint particles are a filtration problem, and adsorbers are not commonly used.

Incineration is used to reduce organic vapor emissions from baking ovens for large appliances, metal furniture, and miscellaneous products, and it is an option for control of emissions from application and flashoff areas.

Table 4.2.2.4-1 gives emission factors for large appliance, metal furniture, and miscellaneous metal parts coating lines, and Table 4.2.2.4-2 gives their estimated control efficiencies.

Table 4.2.2.4-2. ESTIMATED CONTROL EFFICIENCIES FOR METAL COATING LINES[a]

Control Technology	Application			Organic Emissions Reduction (%)		
	Large Appliances	Metal Furniture	Miscellaneous	Large Appliances	Metal Furniture	Miscellaneous
Powder	Top, exterior or interior single coat	Top or single coat	Oven-baked single coat or topcoat	95 - 99[b]	95 - 99[b]	95 - 98[c]
Waterborne (spray, dip, flowcoat)	All applications	Prime, top or single coat	Oven-baked single coat, primer and topcoat; air dried primer and topcoat	70 - 90[b]	60 - 90[b]	60 - 90[c]
Waterborne (electrodeposition)	Prime or interior single coat	Prime or single coat	Oven-baked single coat and primer	90 - 95[b]	90 - 95[b]	90 - 95[c]
Higher solids (spray)	Top or exterior single coat and sound deadener	Top or single coat	Oven-baked single coat and topcoat; air dried primer and topcoat	60 - 80[b]	50 - 80[b]	50 - 80[c]
Carbon absorption	Prime, single or topcoat application and flashoff areas	Prime, top or single coat application and flashoff areas	Oven-baked single coat, primer and topcoat application and flashoff areas; air dried primer and topcoat application and drying areas	90[d]	90[d]	90[d]
Incineration	Prime, top or single coat ovens	Ovens	Ovens	90[d]	90[d]	90+[d]

[a] References 1-3.

[b] The base case against which these % reductions were calculated is a high organic solvent coating that contains 25 volume % solids and 75 volume % organic solvents. Transfer efficiencies for liquid coatings are assumed to be about 80% for spray and 90% for dip or flowcoat, for powders about 93%, and for electrodeposition, 99%.

[c] Figures reflect the range of reduction possible. Actual reduction achieved depends on compositions of the conventional coating originally used and replacement low organic solvent coating, on transfer efficiency, and on relative film thicknesses of the two coatings.

[d] Reduction is only across the control device and does not account for capture efficiency.

References For Section 4.2.2.4

1. *Control Of Volatile Organic Emissions From Existing Stationary Sources, Volume III: Surface Coating Of Metal Furniture*, EPA-450/2-77-032, U. S. Environmental Protection Agency, Research Triangle Park, NC, December 1977.

2. *Control Of Volatile Organic Emissions From Existing Stationary Sources, Volume V: Surface Coating Of Large Appliances*, EPA-450/2-77-034, U. S. Environmental Protection Agency, Research Triangle Park, NC, December 1977.

3. *Control Of Volatile Organic Emissions From Existing Stationary Sources, Volume V: Surface Coating Of Miscellaneous Metal Parts And Products*, EPA-450/2-78-015, U. S. Environmental Protection Agency, Research Triangle Park, NC, June 1978.

4. G. T. Helms, "Appropriate Transfer Efficiencies For Metal Furniture And Large Appliance Coating", Memorandum, Office Of Air Quality Planning And Standards, U. S. Environmental Protection Agency, Research Triangle Park, NC, November 28, 1980.

4.2.2.5 Flat Wood Interior Panel Coating

4.2.2.5.1 Process Description[1]

Finished flat wood construction products are interior panels made of hardwood plywoods (natural and lauan), particle board, and hardboard.

Fewer than 25 percent of the manufacturers of such flat wood products coat the products in their plants, and in some of the plants that do coat, only a small percentage of total production is coated. At present, most coating is done by toll coaters who receive panels from manufacturers and undercoat or finish them according to customer specifications and product requirements.

Some of the layers and coatings that can be factory-applied to flat woods are filler, sealer, groove coat, primer, stain, basecoat, ink, and topcoat. Solvents used in organic base flat wood coatings are usually component mixtures, including methyl ethyl ketone, methyl isobutyl ketone, toluene, xylene, butyl acetates, propanol, ethanol, butanol, naphtha, methanol, amyl acetate, mineral spirits, SoCal I and II, glycols, and glycol ethers. Those most often used in waterborne coatings are glycol, glycol ethers, propanol, and butanol.

Various forms of roll coating are the preferred techniques for applying coatings to flat woods. Coatings used for surface cover can be applied with a direct roller coater, and reverse roll coaters are generally used to apply fillers, forcing the filler into panel cracks and voids. Precision coating and printing (usually with offset gravure grain printers) are also forms of roll coating, and several types of curtain coating may be employed, also (usually for topcoat application). Various spray techniques and brush coating may be used, too.

Printed interior panelings are produced from plywoods with hardwood surfaces (primarily lauan) and from various wood composition panels, including hardboard and particle board. Finishing techniques are used to cover the original surface and to produce various decorative effects. Figure 4.2.2.5-1 is a flow diagram showing some, but not all, typical production line variations for printed interior paneling.

Groove coatings, applied in different ways and at different points in the coating procedure, are usually pigmented low resin solids reduced with water before use, therefore yielding few, if any, emissions. Fillers, usually applied by reverse roll coating, may be of various formulations: (1) polyester (which is ultraviolet cured) (2) water base, (3) lacquer base, (4) polyurethane, and (5) alkyd urea base. Water base fillers are in common use on printed paneling lines.

Sealers may be of water or solvent base, usually applied by airless spray or direct roll coating, respectively. Basecoats, which are usually direct roll coated, generally are of lacquer, synthetic, vinyl modified alkyd urea, catalyzed vinyl, or water base.

Inks are applied by an offset gravure printing operation similar to direct roll coating. Most lauan printing inks are pigments dispersed in alkyd resin, with some nitrocellulose added for better wipe and printability. Water base inks have a good future for clarity, cost, and environmental reasons. After printing, a board goes through 1 or 2 direct or precision roll coaters for application of the clear protective topcoat. Some topcoats are synthetic, prepared from solvent soluble alkyd or polyester resins, urea formaldehyde cross linkings, resins, and solvents.

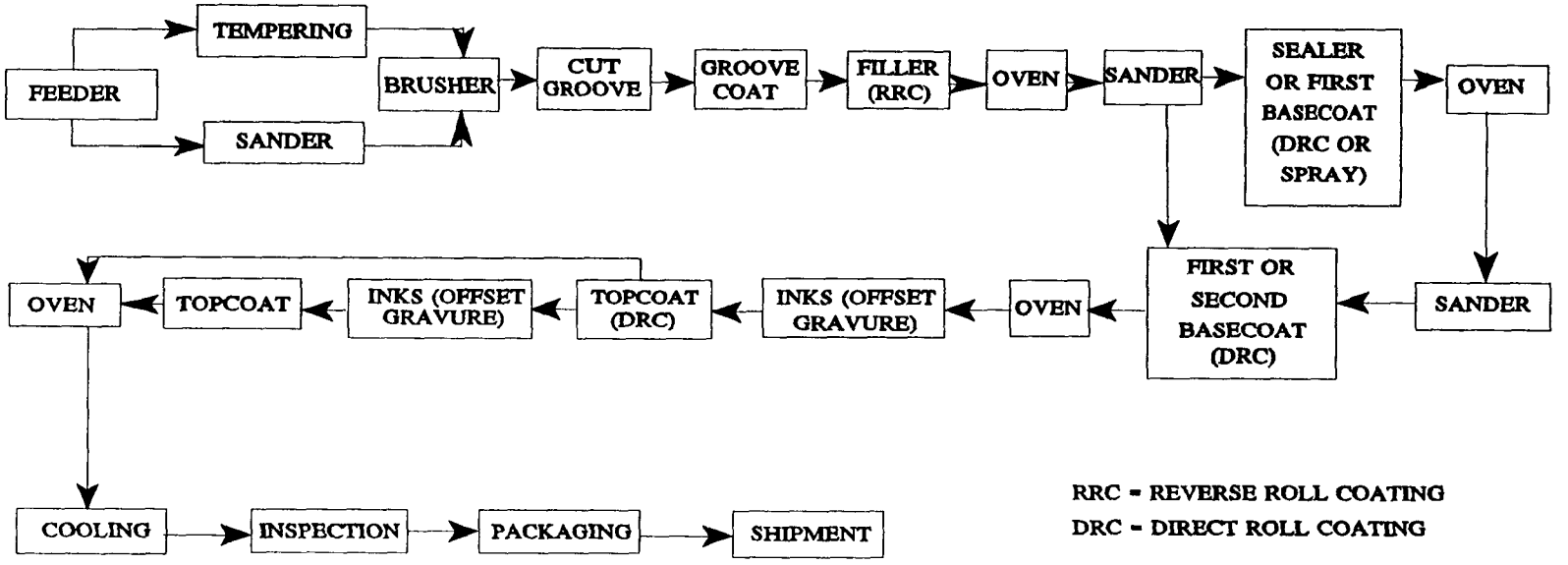

Figure 4.2.2.5-1. Flat wood interior panel coating line emission points.

Natural hardwood plywood panels are coated with transparent or clear finishes to enhance and protect their face ply of hardwood veneer. Typical production lines are similar to those for printed interior paneling, except that a primer sealer is applied to the filled panel, usually by direct roll coating. The panel is then embossed and "valley printed" to give a "distressed" or antique appearance. No basecoat is required. A sealer is also applied after printing but before application of the topcoat, which may be curtain coated, although direct roll coating remains the usual technique.

4.2.2.5.2 Emissions And Controls[1-2]

Emissions of volatile organic compounds (VOC) at flat wood coating plants occur primarily from reverse roll coating of filler, direct roll coating of sealer and basecoat, printing of wood grain patterns, direct roll or curtain coating of topcoat(s), and oven drying after 1 or more of those operations (see Figure 4.2.2.5-1). All solvent used and not recovered can be considered potential emissions. Emissions can be calculated from the factors in Table 4.2.2.1-1 if the coating use is known. Emissions for interior printed panels can be estimated from the factors in Table 4.2.2.5-1, if the area of coated panels is known.

Waterborne coatings are increasingly used to reduce emissions. They can be applied to almost all flat wood except redwood and, possibly, cedar. The major use of waterborne flat wood coatings is in the filler and basecoat applied to printed interior paneling. Limited use has been made of waterborne materials for inks, groove coats, and topcoats with printed paneling, and for inks and groove coats with natural hardwood panels.

Ultraviolet curing systems are applicable to clear or semitransparent fillers, topcoats on particle board coating lines, and specialty coating operations. Polyester, acrylic, urethane, and alkyd coatings can be cured by this method.

Afterburners can be used to control VOC emissions from baking ovens, and there would seem to be ample recovered heat to use. Extremely few flat wood coating operations have afterburners as add-on controls, though, despite the fact that they are a viable control option for reducing emissions where product requirements restrict the use of other control techniques.

Carbon adsorption is technically feasible, especially for specific applications (e. g., redwood surface treatment), but the use of multicomponent solvents and different coating formulations in several steps along the coating line has thus far precluded its use to control flat wood coating emissions and to reclaim solvents. The use of low solvent coatings to fill pores and to seal wood has been demonstrated.

Table 4.2.2.5-1 (Metric And English Units). VOC EMISSION FACTORS FOR INTERIOR PRINTED PANELS[a]

EMISSION FACTOR RATING: B

Paint Category	Coverage[b]				Uncontrolled VOC Emissions					
	liter/100 m^2		gal/1000 ft^2		kg/100 m^2 Coated			lb/1000 ft^2 Coated		
	Water-borne	Conven-tional	Water-borne	Conven-tional	Water-borne	Conven-tional	Ultra-violet[c]	Water-borne	Conven-tional	Ultra-violet[c]
Filler	6.5	6.9	1.6	1.7	0.3	3.0	Neg	0.6	6.1	Neg
Sealer	1.4	1.2	0.35	0.3	0.2	0.5	0	0.4	1.1	0
Basecoat	2.6	3.2	3.2	0.65	0.8	0.2	0.24	0.5	5.0	0.5
Ink	0.4	0.4	0.1	0.1	0.1	0.3	0.10	0.2	0.6	0.2
Topcoat	2.6	2.8	0.65	0.7	0.4	1.8	Neg	0.8	3.7	Neg
Total	13.5	14.5	3.4	3.6	1.2	8.0	0.4	2.5	16.5	0.8

[a] Reference 1. Organics are all nonmethane. Neg = negligible.
[b] Reference 3. From Abitibi Corp., Cucamonga, CA. Adjustments between water and conventional paints made using typical nonvolatiles content.
[c] UV line uses no sealer, uses waterborne basecoat and ink. Total adjusted to cover potential emissions from UV coatings.

References For Section 4.2.2.5

1. *Control Of Volatile Organic Emissions From Existing Stationary Sources, Volume VII: Factory Surface Coating Of Flat Wood Interior Paneling*, EPA-450/2-78-032, U. S. Environmental Protection Agency, Research Triangle Park, NC, June 1978.

2. *Air Pollution Control Technology Applicable To 26 Sources Of Volatile Organic Compounds*, Office Of Air Quality Planning And Standards, U. S. Environmental Protection Agency, Research Triangle Park, NC, May 27, 1977. Unpublished.

3. *Products Finishing*, *41*(6A):4-54, March 1977.

4.2.2.6 Paper Coating

4.2.2.6.1 Process Description[1-2]

Paper is coated for various decorative and functional purposes with waterborne, organic solventborne, or solvent-free extruded materials. Paper coating is not to be confused with printing operations, which use contrast coatings that must show a difference in brightness from the paper to be visible. Coating operations are the application of a uniform layer or coating across a substrate. Printing results in an image or design on the substrate.

Waterborne coatings improve printability and gloss but cannot compete with organic solventborne coatings in resistance to weather, scuff, and chemicals. Solventborne coatings, as an added advantage, permit a wide range of surface textures. Most solventborne coating is done by paper converting companies that buy paper from mills and apply coatings to produce a final product. Among the many products that are coated with solventborne materials are adhesive tapes and labels, decorated paper, book covers, zinc oxide-coated office copier paper, carbon paper, typewriter ribbons, and photographic film.

Organic solvent formulations generally used are made up of film-forming materials, plasticizers, pigments, and solvents. The main classes of film formers used in paper coating are cellulose derivatives (usually nitrocellulose) and vinyl resins (usually the copolymer of vinyl chloride and vinyl acetate). Three common plasticizers are dioctyl phthalate, tricresyl phosphate, and castor oil. The major solvents used are toluene, xylene, methyl ethyl ketone, isopropyl alcohol, methanol, acetone, and ethanol. Although a single solvent is frequently used, a mixture is often necessary to obtain the optimum drying rate, flexibility, toughness, and abrasion resistance.

A variety of low solvent coatings, with negligible emissions, have been developed for some uses to form organic resin films equal to those of conventional solventborne coatings. They can be applied up to 1/8 inch thick (usually by reverse roller coating) to products like artificial leather goods, book covers, and carbon paper. Smooth hot melt finishes can be applied over rough textured paper by heated gravure or roll coaters at temperatures from 65 to 230°C (150 to 450°F).

Plastic extrusion coating is a type of hot melt coating in which a molten thermoplastic sheet (usually low or medium density polyethylene) is extruded from a slotted die at temperatures of up to 315°C (600°F). The substrate and the molten plastic coat are united by pressure between a rubber roll and a chill roll which solidifies the plastic. Many products, such as the polyethylene-coated milk carton, are coated with solvent-free extrusion coatings.

Figure 4.2.2.6-1 shows a typical paper coating line that uses organic solventborne formulations. The application device is usually a reverse roller, a knife, or a rotogravure printer. Knife coaters can apply solutions of much higher viscosity than roll coaters can, thus emitting less solvent per pound of solids applied. The gravure printer can print patterns or can coat a solid sheet of color on a paper web.

Ovens may be divided into from 2 to 5 temperature zones. The first zone is usually at about 430°C (110°F), and other zones have progressively higher temperatures to cure the coating after most solvent has evaporated. The typical curing temperature is 120°C (250°F), and ovens are generally limited to 200°C (400°F) to avoid damage to the paper. Natural gas is the fuel most often used in

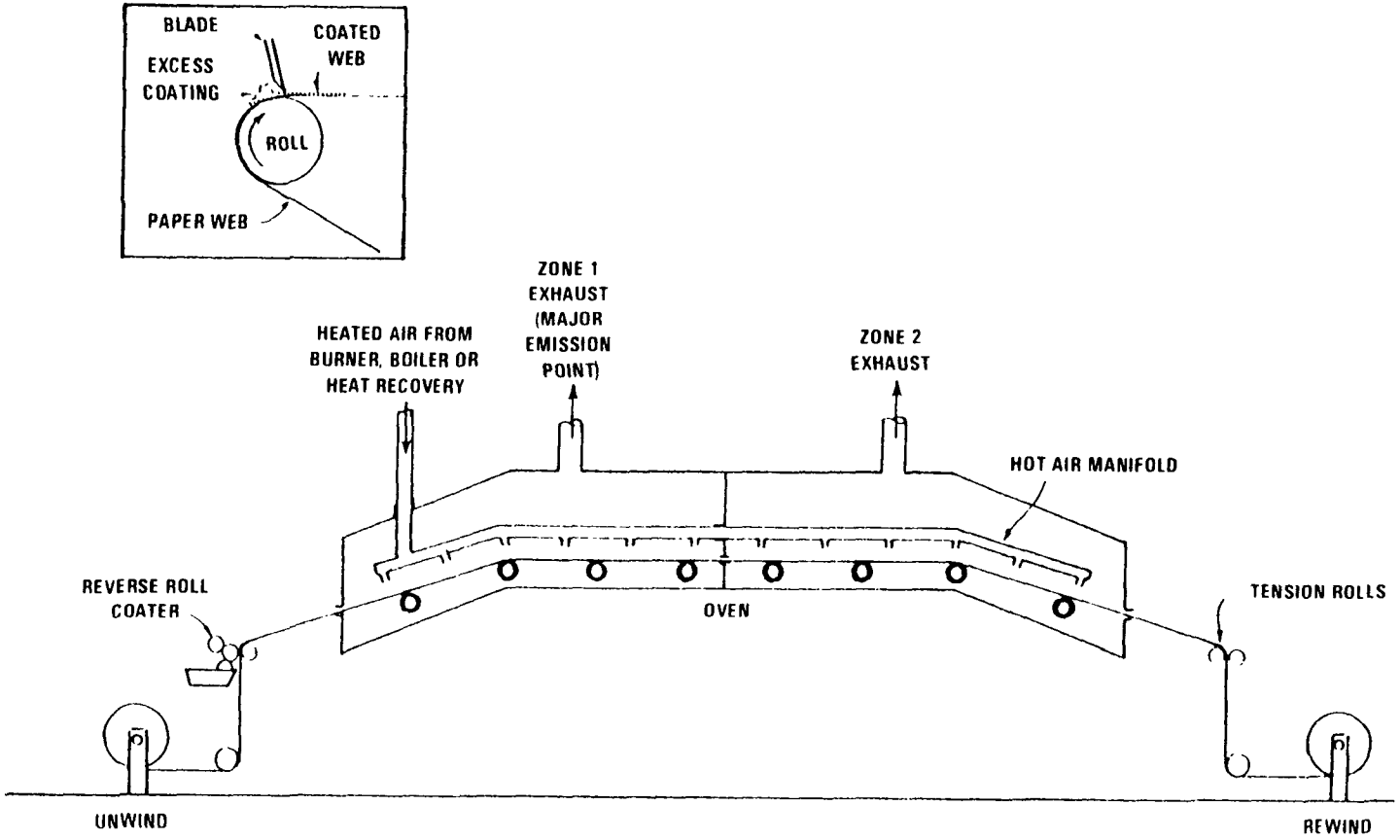

Figure 4.2.2.6-1. Paper coating line emission points.

direct-fired ovens, but fuel oil is sometimes used. Some of the heavier grades of fuel oil can create problems, because sulfur oxide (SO) and particulate may contaminate the paper coating. Distillate fuel oil usually can be used satisfactorily. Steam produced from burning solvent retrieved from an adsorber or vented to an incinerator may also be used to heat curing ovens.

4.2.2.6.2 Emissions And Controls[2]

The main emission points from paper coating lines are the coating applicator and the oven (see Figure 4.2.2.6-1). In a typical paper-coating plant, about 70 percent of all solvents used are emitted from the coating lines, with most coming from the first zone of the oven. The other 30 percent are emitted from solvent transfer, storage, and mixing operations and can be reduced through good housekeeping practices. All solvent used and not recovered or destroyed can be considered potential emissions.

Volatile organic compound (VOC) emissions from individual paper coating plants vary with size and number of coating lines, line construction, coating formulation, and substrate composition, so each must be evaluated individually. VOC emissions can be estimated from the factors in Table 4.2.2.6-1 if coating use is known and sufficient information on coating composition is available. Since many paper coating formulas are proprietary, it may be necessary to have information on the total solvent used and to assume that, unless a control device is used, essentially all solvent is emitted. Rarely would as much as 5 percent be retained in the product.

Table 4.2.2.6-1. CONTROL EFFICIENCIES FOR PAPER COATING LINES[a]

Affected Facility	Control Method	Efficiency (%)
Coating line	Incineration	95
	Carbon adsorption	90+
	Low solvent coating	80 - 99[b]

[a] Reference 2.
[b] Based on comparison with a conventional coating containing 35% solids and 65% organic solvent, by volume.

Almost all solvent emissions from the coating lines can be collected and sent to a control device. Thermal incinerators have been retrofitted to a large number of oven exhausts, with primary and even secondary heat recovery systems heating the ovens. Carbon adsorption is most easily adaptable to lines which use single solvent coating. If solvent mixtures are collected by adsorbers, they usually must be distilled for reuse.

Although available for some products, low solvent coatings are not yet available for all paper-coating operations. The nature of the products, such as some types of photographic film, may preclude development of a low-solvent option. Furthermore, the more complex the mixture of organic solvents in the coating, the more difficult and expensive to reclaim them for reuse with a carbon adsorption system.

References For Section 4.2.2.6

1. T. W. Hughes, *et al.*, *Source Assessment: Prioritization Of Air Pollution From Industrial Surface Coating Operations*, EPA-650/2-75-019a, U. S. Environmental Protection Agency, Cincinnati, OH, February 1975.

2. *Control Of Volatile Organic Emissions From Existing Stationary Sources, Volume II: Surface Coating Of Cans, Coils, Paper Fabrics, Automobiles, And Light Duty Trucks*, EPA-450/2-77-008, U. S. Environmental Protection Agency, Research Triangle Park, NC, May 1977.

4.2.2.7 Polymeric Coating Of Supporting Substrates[1-8]

"Polymeric coating of supporting substrates" is defined as a web coating process other than paper coating that applies an elastomer or other polymeric material onto a supporting substrate. Typical substrates include woven, knit, and nonwoven textiles; fiberglass; leather; yarn; and cord. Examples of polymeric coatings are natural and synthetic rubber, urethane, polyvinyl chloride, acrylic, epoxy, silicone, phenolic resins, and nitrocellulose. Plants have from 1 to more than 10 coating lines. Most plants are commission coaters where coated substrates are produced according to customer specifications. Typical products include rainwear, conveyor belts, V-belts, diaphragms, gaskets, printing blankets, luggage, and aircraft and military products. This industrial source category has been retitled from "Fabric Coating" to that listed above to reflect the general use of polymeric coatings on substrate materials including but not limited to conventional textile fabric substrates.

4.2.2.7.1 Process Description[1-3]

The process of applying a polymeric coating to a supporting substrate consists of mixing the coating ingredients (including solvents), conditioning the substrate, applying the coating to the substrate, drying/curing the coating in a drying oven, and subsequent curing or vulcanizing if necessary. Figure 4.2.2.7-1 is a schematic of a typical solvent-borne polymeric coating operation identifying volatile organic compound (VOC) emission locations. Typical plants have 1 or 2 small ($\leq$38 m^3 or 10,000 gallons) horizontal or vertical solvent storage tanks that are operated at atmospheric pressure; however, some plants have as many as 5. Coating preparation equipment includes the mills, mixers, holding tanks, and pumps used to prepare polymeric coatings for application. Urethane coatings typically are purchased premixed and require little or no mixing at the coating plant. The conventional types of equipment for applying organic solvent-borne and waterborne coatings include knife-over-roll, dip, and reverse-roll coaters Once applied to the substrate, liquid coatings are solidified by evaporation of the solvent in a steam-heated or direct-fired oven. Drying ovens usually are of forced-air convection design in order to maximize drying efficiency and prevent a dangerous localized buildup of vapor concentration or temperature. For safe operation, the concentration of organic vapors is usually held between 10 and 25 percent of the lower explosive limit (LEL). Newer ovens may be designed for concentrations of up to 50 percent of the LEL through the addition of monitors, alarms, and fail-safe shutdown systems. Some coatings require subsequent curing or vulcanizing in separate ovens.

4.2.2.7.2 Emission Sources[1-3]

The significant VOC emission sources in a polymeric coating plant include the coating preparation equipment, the coating application and flashoff area, and the drying ovens. Emissions from the solvent storage tanks and the cleanup area are normally only a small percentage of the total.

In the mixing or coating preparation area, VOCs are emitted from the individual mixers and holding tanks during the following operations: filling of mixers, transfer of the coating, intermittent activities such as changing the filters in the holding tanks, and mixing (if mix equipment is not equipped with tightly fitting covers). The factors affecting emissions in the mixing area include tank size, number of tanks, solvent vapor pressure, throughput, and the design and performance of tank covers.

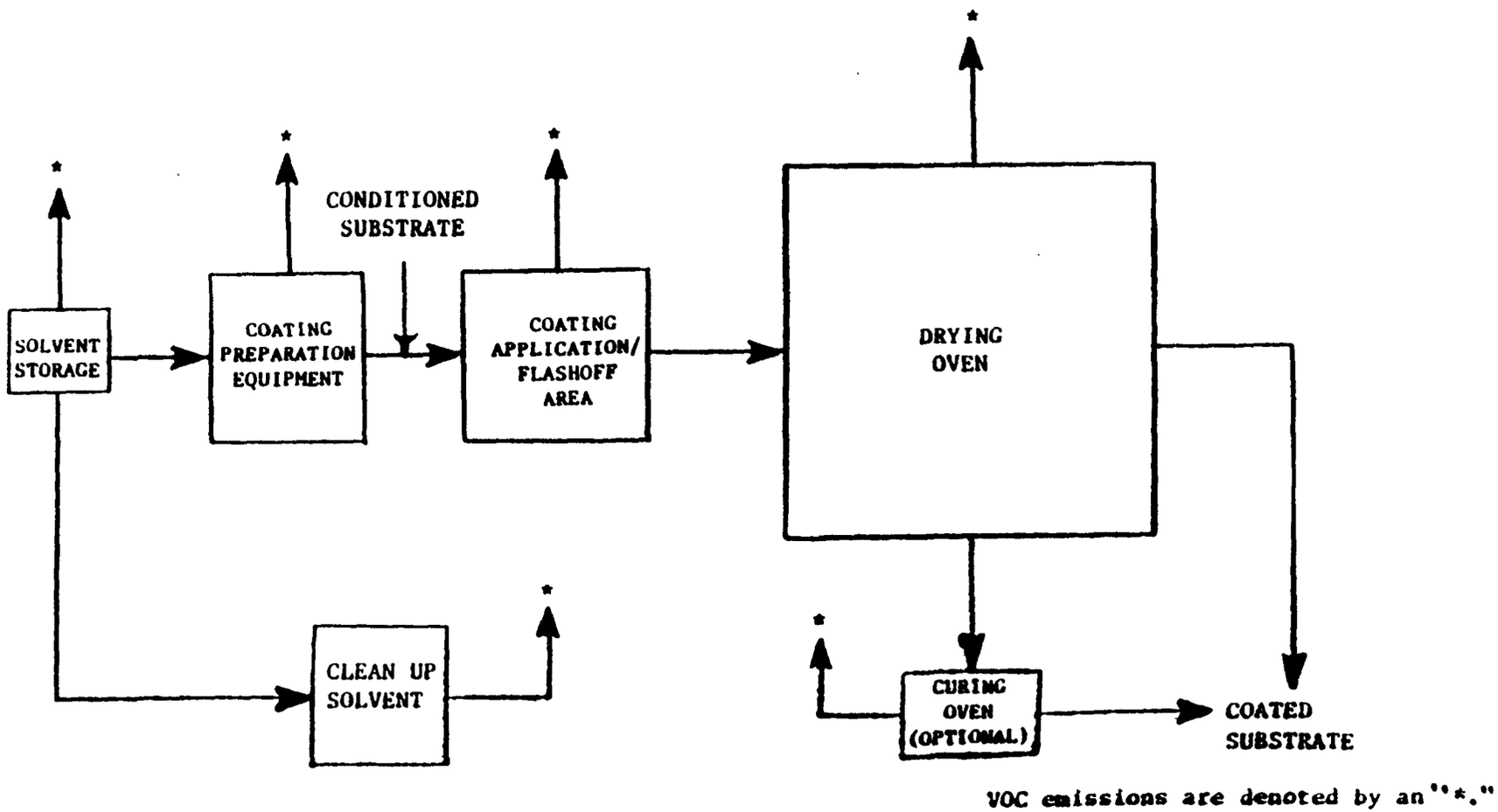

Figure 4.2.2.7-1. Solventborne polymeric coating operation and VOC emission locations.[1]

Emissions from the coating application area result from the evaporation of solvent around the coating application equipment during the application process and from the exposed substrate as it travels from the coater to the drying oven entrance (flashoff). The factors affecting emissions are the solvent content of the coating, line width and speed, coating thickness, volatility of the solvent(s), temperature, distance between coater and oven, and air turbulence in the coating area.

Emissions from the drying oven result from the fraction of the remaining solvent that is driven off in the oven. The factors affecting uncontrolled emissions are the solvent content of the coating and the amount of solvent retained in the finished product. Fugitive emissions due to the opening of oven doors also may be significant in some operations. Some plasticizers and reaction byproducts may be emitted if the coating is subsequently cured or vulcanized. However, emissions from the curing or vulcanizing of the coating are usually negligible compared to the total emissions from the operation.

Solvent type and quantity are the common factors affecting emissions from all the operations in a polymeric coating facility. The rate of evaporation or drying is dependent upon solvent vapor pressure at a given temperature and concentration. The most commonly used organic solvents are toluene, dimethyl formamide (DHF), acetone, methyl ethyl ketone (MEK), isopropyl alcohol, xylene, and ethyl acetate. Factors affecting solvent selection are cost, solvency, toxicity, availability, desired rate of evaporation, ease of use after solvent recovery, and compatibility with solvent recovery equipment.

4.2.2.7.3 Emissions Control[1,2,4-7]

A control system for evaporative emissions consists of 2 components: a capture device and a control device. The efficiency of the control system is determined by the efficiencies of the 2 components.

A capture device is used to contain emissions from a process operation and direct them to a stack or to a control device. Covers, vents, hoods, and partial and total enclosures are alternative capture devices used on coating preparation equipment. Hoods and partial and total enclosures are typical capture devices for use in the coating application area. A drying oven can be considered a capture device because it both contains and directs VOC emissions from the process. The efficiency of capture devices is variable and depends upon the quality of design and the level of operation and maintenance.

A control device is any equipment that has as its primary function the reduction of emissions. Control devices typically used in this industry are carbon adsorbers, condensers, and incinerators. Tightly fitting covers on coating preparation equipment may be considered both capture and control devices.

Carbon adsorption units use activated carbon to adsorb VOCs from a gas stream; the VOCs are later recovered from the carbon. Two types of carbon adsorbers are available: fixed-bed and fluidized bed. Fixed-bed carbon adsorbers are designed with a steam-stripping technique to recover the VOC material and regenerate the activated carbon. The fluidized-bed units used in this industry are designed to use nitrogen for VOC vapor recovery and carbon regeneration. Both types achieve typical VOC control efficiencies of 95 percent when properly designed, operated, and maintained.

Condensation units control VOC emissions by cooling the solvent-laden gas to the dew point of the solvent(s) and collecting the droplets. There are 2 condenser designs commercially available: nitrogen (inert gas) atmosphere, and air atmosphere. These systems differ in the design and operation

of the drying oven (i. e., use of nitrogen or air in the oven) and in the method of cooling the solvent laden air (i. e., liquified nitrogen or refrigeration). Both design types can achieve VOC control efficiencies of 95 percent.

Incinerators control VOC emissions through oxidation of the organic compounds into carbon dioxide and water. Incinerators used to control VOC emissions may be of thermal or catalytic design and may use primary or secondary heat recovery to reduce fuel costs. Thermal incinerators operate at approximately 890°C (1600°F) to ensure oxidation of the organic compounds. Catalytic incinerators operate in the rage of 325 to 430°C (600 to 800°F) while using a catalyst to achieve comparable oxidation of VOCs. Both design types achieve a typical VOC control efficiency of 98 percent.

Tightly fitting covers control VOC emissions from mix vessels by reducing evaporative losses. Airtight covers can be fitted with conservation vents to avoid excessive internal pressure or vacuum. The parameters affecting the efficiency of these controls are solvent vapor pressure, cyclic temperature change, tank size, throughput, and the pressure and vacuum settings on the conservation vents. A good system of tightly fitting covers on mixing area vessels is estimated to reduce emissions by approximately 40 percent. Control efficiencies of 95 or 98 percent can be obtained by directing the captured VOCs to an adsorber, condenser, or incinerator.

When the efficiencies of the capture device and control device are known, the efficiency of the control system can be computed by the following equation:

(capture efficiency) x (control efficiency) = (control system efficiency)

The terms of this equation are fractional efficiencies rather than percentages. For instance, a system of hoods delivering 60 percent of VOC emissions to a 90 percent efficient carbon adsorber would result in a control system efficiency of 54 percent (0.60 x 0.90 = 0.54). Table 4.2.2.7-1 summarizes the control system efficiencies that may be used in the absence of measured data on mix equipment and coating operations.

Table 4.2.2.7-1. SUMMARY OF CONTROL EFFICIENCIES[a]

Control Technology	Overall Control Efficiency, %[b]
Coating Preparation Equipment	
Uncontrolled	0
Sealed covers with conservation vents	40
Sealed covers with carbon adsorber/condenser	95
Coating Operations[c]	
Local ventilation with carbon adsorber/condenser	81
Partial enclosure with carbon adsorber/condenser	90
Total enclosure with carbon adsorber/condenser	93
Total enclosure with incinerator	96

[a] Reference 1. To be used in the absence of measured data.
[b] To be applied to uncontrolled emissions from indicated process area, not from entire plant.
[c] Includes coating application/flashoff area and drying oven.

4.2.2.7.4 Emissions Estimation Techniques[1,4-8]

In this diverse industry, realistic estimates of emissions require solvent usage data. Due to the wide variation found in coating formulations, line speeds, and products, no meaningful inferences can be made based simply on the equipment present.

Plantwide emissions can be estimated by performing a liquid material balance in uncontrolled plants and in those where VOCs are recovered for reuse or sale. This technique is based on the assumption that all solvent purchased replaces VOC's which have been emitted. Any identifiable and quantifiable side-streams should be subtracted from this total. The general formula for this is:

$$\begin{pmatrix}\text{solvent}\\ \text{purchased}\end{pmatrix} - \begin{pmatrix}\text{quantifiable}\\ \text{solvent output}\end{pmatrix} = \begin{pmatrix}\text{VOC}\\ \text{emitted}\end{pmatrix}$$

The first term encompasses all solvent purchased including thinners, cleaning agents, and the solvent content of any premixed coatings, as well as any solvent directly used in coating formulation. From this total, any quantifiable solvent outputs are subtracted. These outputs may include solvent retained in the finished product, reclaimed solvent sold for use outside the plant, and solvent contained in waste streams. Reclaimed solvent which is reused at the plant is <u>not</u> subtracted.

The advantages of this method are that it is based on data that are usually readily available, it reflects actual operations rather than theoretical steady-state production and control conditions, and it includes emissions from all sources at the plant. However, care should be taken not to apply this method over too short a time span. Solvent purchases, production, and waste removal occur in their own cycles, which may not coincide exactly.

Occasionally, a liquid material balance may be possible on a smaller scale than the entire plant. Such an approach may be feasible for a single coating line or group of lines served by a dedicated mixing area and a dedicated control and recovery system. In this case, the computation begins with total solvent metered to the mixing area instead of solvent purchased. Reclaimed solvent is subtracted from this volume whether or not it is reused onsite. Of course, other solvent input and output streams must be accounted for as previously indicated. The difference between total solvent input and total solvent output is then taken to be the quantity of VOCs emitted from the equipment in question.

The configuration of meters, mixing areas, production equipment, and controls usually will not make this approach possible. In cases where control devices destroy potential emissions or a liquid material balance is inappropriate for other reasons, plant-wide emissions can be estimated by summing the emissions calculated for specific areas of the plant. Techniques for these calculations are presented below.

Estimating VOC emissions from a coating operation (application/flashoff area and drying oven) starts with the assumption that the uncontrolled emission level is equal to the quantity of solvent contained in the coating applied. In other words, all the VOC in the coating evaporates by the end of the drying process. This quantity should be adjusted downward to account for solvent retained in the finished product in cases where it is quantifiable and significant.

Two factors are necessary to calculate the quantity of solvent applied: the solvent content of the coating and the quantity of coating applied. Coating solvent content can be directly measured using EPA Reference Method 24. Alternative ways of estimating the VOC content include the use of

either data on coating formulation that are usually available from the plant owner/operator or premixed coating manufacturer or, if these cannot be obtained, approximations based on the information in Table 4.2.2.7-2. The amount of coating applied may be directly metered. If it is not, it must be determined from production data. These should be available from the plant owner/operator. Care should be taken in developing these 2 factors to ensure that they are in compatible units.

Table 4.2.2.7-2. SOLVENT AND SOLIDS CONTENT OF POLYMERIC COATINGS[a]

Polymer Type	Typical Percentage, By Weight	
	% solvent	% solids
Rubber	50 - 70	30 - 50
Urethanes	50 - 60	40 - 50
Acrylics	—[b]	50
Vinyl[c]	60 - 80	20 - 40
Vinyl plastisol	5	95
Organisol	15 - 40	60 - 85
Epoxies	30 - 40	60 - 70
Silicone	50 - 60	40 - 50
Nitrocellulose	70	30

[a] Reference 1.
[b] Organic solvents are generally not used in the formulation of acrylic coatings. Therefore, the solvent content for acrylic coatings represents nonorganic solvent use (i. e., water).
[c] Solventborne vinyl coating.

When an estimate of uncontrolled emissions is obtained, the controlled emissions level is computed by applying a control system efficiency factor:

$$\begin{pmatrix}\text{uncontrolled}\\ \text{VOC}\end{pmatrix} \times \begin{pmatrix}1 - \text{control system efficiency}\end{pmatrix} = \begin{pmatrix}\text{VOC}\\ \text{emitted}\end{pmatrix}$$

As previously explained, the control system efficiency is the product of the efficiencies of the capture device and the control device. If these values are not known, typical efficiencies for some combinations of capture and control devices are presented in Table 4.2.2.7-1. It is important to note that these control system efficiencies are applicable only to emissions that occur within the areas served by the systems. Emissions from such sources as process wastewater or discarded waste coatings may not be controlled at all.

In cases where emission estimates from the mixing area alone are desired, a slightly different approach is necessary. Here, uncontrolled emissions will be only that portion of total solvent that evaporates during the mixing process. A liquid material balance across the mixing area (i. e., solvent entering minus solvent content of coating applied) would provide a good estimate. In the absence of

any measured value, it may be assumed that approximately 10 percent of the total solvent entering the mixing area is emitted during the mixing process, but this can vary widely. When an estimate of uncontrolled mixing area emissions has been made, the controlled emission rate can be calculated as discussed previously. Table 4.2.2.7-1 lists typical overall control efficiencies for coating mix preparation equipment.

Solvent storage tanks of the size typically found in this industry are regulated by only a few States and localities. Tank emissions are generally small (< 125 kg/yr [275 lb/yr]). If an estimate of emissions is desired, it can be computed using the equations, tables, and figures provided in Chapter 7.

References For Section 4.2.2.7

1. *Polymeric Coating Of Supporting Substrates, Background Information For Proposed Standards*, EPA-450/3-85-022a, U. S. Environmental Protection Agency, Research Triangle Park, NC, October 1985.

2. *Control Of Volatile Organic Emissions From Existing Stationary Sources — Volume II: Surface Coating Of Cans, Coils, Paper, Fabrics, Automobiles, and Light Duty Trucks*, EPA-450/2-77-008, U. S. Environmental Protection Agency, Research Triangle Park, NC, May 1977.

3. E. J. Maurer, "Coating Operation Equipment Design And Operating Parameters", Memorandum To Polymeric Coating Of Supporting Substrates File, MRS, Raleigh, NC, April 23, 1984.

4. *Control Of Volatile Organic Emissions From Existing Stationary Sources, Volume I: Control Methods For Surface-Coating Operations*, EPA-450/2-76-028, U. S. Environmental Protection Agency, Research Triangle Park, NC, November 1976.

5. G. Crane, *Carbon Adsorption For VOC Control*, U. S. Environmental Protection Agency, Research Triangle Park, NC, January 1982.

6. D. Moscone, "Thermal Incinerator Performance For NSPS", Memorandum, Office Of Air Quality Planning And Standards, U. S. Environmental Protection Agency, Research Triangle Park, NC, June 11, 1980.

7. D. Moscone, "Thermal Incinerator Performance For NSPS, Addendum", Memorandum, Office Of Air Quality Planning And Standards, U. S. Environmental Protection Agency, Research Triangle Park, NC, July 22, 1980.

8. C. Beall, "Distribution Of Emissions Between Coating Mix: Preparation Area And The Coating Line", Memorandum To Magnetic Tape Coating Project File, MRS, Raleigh, NC, June 22, 1984.

4.2.2.8 Automobile And Light Duty Truck Surface Coating Operations[1-4]

4.2.2.8.1 General

Surface coating of an automobile body is a multistep operation carried out on an assembly line conveyor system. Such a line operates at a speed of 3 to 8 meters (9 to 25 feet) per minute and usually produces 30 to 70 units per hour. An assembly plant may operate up to 2 8-hour production shifts per day, with a third shift used for cleanup and maintenance. Plants may stop production for a vacation of one-and-a-half weeks at Christmas through New Year's Day and may stop for several weeks in summer for model changeover.

Although finishing processes vary from plant to plant, they have some common characteristics. Major steps of such processes are:

Solvent[a] wipe	Curing of guide coat
Phosphating treatment	Application of topcoat(s)
Application of prime coat	Curing of topcoat(s)
Curing of prime coat	Final repair operations
Application of guide coat	

A general diagram of these consecutive steps is presented in Figure 4.2.2.8-1. Application of a coating takes place in a dip tank or spray booth, and curing occurs in the flashoff area and bake oven. The typical structures for application and curing are contiguous, to prevent exposure of the wet body to the ambient environment before the coating is cured.

The automobile body is assembled from a number of welded metal sections. The body and the parts to be coated all pass through the same metal preparation process.

First, surfaces are wiped with solvent to eliminate traces of oil and grease. Second, a phosphating process prepares surfaces for the primer application. Since iron and steel rust readily, phosphate treatment is necessary to retard such. Phosphating also improves the adhesion of the primer and the metal. The phosphating process occurs in a multistage washer, with detergent cleaning, rinsing, and coating of the metal surface with zinc phosphate. The parts and bodies pass through a water spray cooling process. If solventborne primer is to be applied, they are then oven dried.

A primer is applied to protect the metal surface from corrosion and to ensure good adhesion of subsequent coatings. Approximately half of all assembly plants use solventborne primers with a combination of manual and automatic spray application. The rest use waterborne primers. As new plants are constructed and existing plants modernized, the use of waterborne primers is expected to increase.

Waterborne primer is most often applied in an electrodeposition (EDP) bath. The composition of the bath is about 5 to 15 volume percent solids, 2 to 10 percent solvent, and the rest water. The solvents used are typically organic compounds of higher molecular weight and low volatility, like ethylene glycol monobutyl ether.

---

[a]The term "solvent" here means organic solvent.

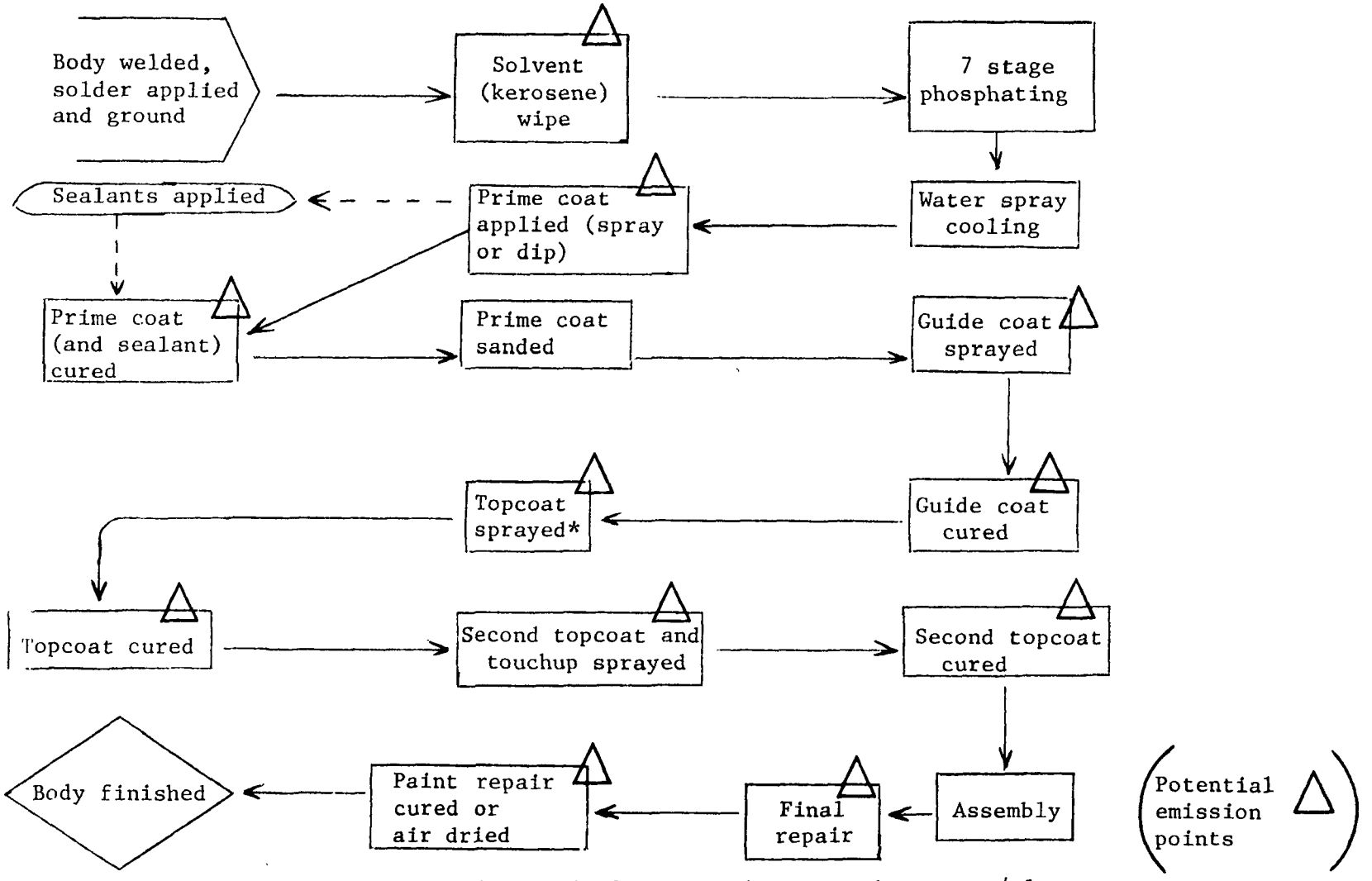

*To get sufficient film build, for two colors or a base coat/clear coat, there may be multiple topcoats.

Figure 4.2.2.8-1. Typical automobile and light duty truck surface coating line.

When EDP is used, a guide coat (also called a primer surfacer) is applied between the primer and the topcoat to build film thickness, to fill in surface imperfections, and to permit sanding between the primer and topcoat. Guide coats are applied by a combination of manual and automatic spraying and can be solventborne or waterborne. Powder guide coat is used at one light duty truck plant.

The topcoat provides the variety of colors and surface appearance to meet customer demand. Topcoats are applied in 1 to 3 steps to ensure sufficient coating thickness. An oven bake may follow each topcoat application, or the coating may be applied wet on wet. At a minimum, the final topcoat is baked in a high-temperature oven.

Topcoats in the automobile industry traditionally have been solventborne lacquers and enamels. Recent trends have been to higher solids content. Powder topcoats have been tested at several plants.

The current trend in the industry is toward base coat/clear coat (BC/CC) topcoating systems, consisting of a relatively thin application of highly pigmented metallic base coat followed by a thicker clear coat. These BC/CC topcoats have more appealing appearance than do single coat metallic topcoats, and competitive pressures are expected to increase their use by U. S. manufacturers.

The VOC content of most BC/CC coatings in use today is higher than that of conventional enamel topcoats. Development and testing of lower VOC content (higher solids) BC/CC coatings are being done, however, by automobile manufacturers and coating suppliers.

Following the application of the topcoat, the body goes to the trim operation area, where vehicle assembly is completed. The final step of the surface coating operation is generally the final repair process, in which damaged coating is repaired in a spray booth and is air dried or baked in a low temperature oven to prevent damage of heat sensitive plastic parts added in the trim operation area.

4.2.2.8.2 Emissions And Controls

Volatile organic compounds (VOC) are the major pollutants from surface coating operations. Potential VOC emitting operations are shown in Figure 4.2.2.8-1. The application and curing of the prime coat, guide coat, and topcoat account for 50 to 80 percent of the VOC emitted from assembly plants. Final topcoat repair, cleanup, and miscellaneous sources such as the coating of small component parts and application of sealants, account for the remaining 20 percent. Approximately 75 to 90 percent of the VOC emitted during the application and curing process is emitted from the spray booth and flashoff area, and 10 to 25 percent from the bake oven. This emissions split is heavily dependent on the types of solvents used and on transfer efficiency. With improved transfer efficiencies and the newer coatings, it is expected that the percent of VOC emitted from the spray booth and the flashoff area will decrease, and the percent of VOC emitted from the bake oven will remain fairly constant. Higher solids coatings, with their slower solvents, will tend to have a greater fraction of emissions from the bake oven.

Several factors affect the mass of VOC emitted per vehicle from surface coating operations in the automotive industry. Among these are:

VOC content of coatings (pounds of coating, less water)
Volume solids content of coating
Area coated per vehicle

Film thickness
Transfer efficiency

The greater the quantity of VOC in the coating composition, the greater will be the emissions. Lacquers having 12 to 18 volume percent solids are higher in VOCs than enamels having 24 to 33 volume percent solids. Emissions are also influenced by the area of the parts being coated, the coating thickness, the configuration of the part, and the application technique.

The transfer efficiency (fraction of the solids in the total consumed coating that remains on the part) varies with the type of application technique. Transfer efficiency for typical air atomized spraying ranges from 30 to 50 percent. The range for electrostatic spraying, an application method that uses an electrical potential to increase transfer efficiency of the coating solids, is from 60 to 95 percent. Both air atomized and electrostatic spray equipment may be used in the same spray booth.

Several types of control techniques are available to reduce VOC emissions from automobile and light duty truck surface coating operations. These methods can be broadly categorized as either control devices or new coating and application systems. Control devices reduce emissions by either recovering or destroying VOC before it is discharged into the ambient air. Such techniques include thermal and catalytic incinerators on bake ovens, and carbon absorbers on spray booths. New coatings with relatively low VOC levels can be used in place of high-VOC-content coatings. Such coating systems include electrodeposition of waterborne prime coatings, and for top coats, air spray of waterborne enamels and air or electrostatic spray of high solids, solventborne enamels and powder coatings. Improvements in the transfer efficiency decrease the amount of coating which must be used to achieve a given film thickness, thereby reducing emissions of VOC to the ambient air.

Calculation of VOC emissions for representative conditions provides the emission factors in Table 4.2.2.8-1. The factors were calculated with the typical value of parameters present in Tables 4.2.2.8-2 and 4.2.2.8-3. The values for the various parameters for automobiles and light duty trucks represent average conditions existing in the automobile and light duty truck industry in 1980. A more accurate estimate of VOC emissions can be calculated with the equation in Table 4.2.2.8-1 and with site-specific values for the various parameters.

Emission factors are not available for final topcoat repair, cleanup, coating of small parts, and application of sealants.

Table 4.2.2.8-1 (Metric And English Units). EMISSION FACTORS FOR AUTOMOBILE AND LIGHT DUTY TRUCK SURFACE COATING OPERATIONS[a]

EMISSION FACTOR RATING: C

Coating	Automobile kg (lb) Of VOC		Light Duty Truck kg (lb) Of VOC	
	Per Vehicle	Per Hour[b]	Per Vehicle	Per Hour[c]
Prime Coat				
Solventborne spray	6.61 (14.54)	363 (799)	19.27 (42.39)	732 (1611)
Cathodic electrodeposition	0.21 (0.45)	12 (25)	0.27 (0.58)	10 (22)
Guide Coat				
Solventborne spray	1.89 (4.16)	104 (229)	6.38 (14.04)	243 (534)
Waterborne spray	0.68 (1.50)	38 (83)	2.3 (5.06)	87 (192)
Topcoat				
Lacquer	21.96 (48.31)	1208 (2657)	NA	NA
Dispersion lacquer	14.50 (31.90)	798 (1755)	NA	NA
Enamel	7.08 (15.58)	390 (857)	17.71 (38.96)	673 (1480)
Basecoat/clear coat	6.05 (13.32)	333 (732)	18.91 (41.59)	719 (1581)
Waterborne	2.25 (4.95)	124 (273)	7.03 (15.47)	267 (588)

[a] All nonmethane VOC. Factors are calculated using the following equation and the typical values of parameters presented in Tables 4.2.2.8-2 and 4.2.2.8-3. NA = not applicable.

$$E_v = \frac{A_v \, c_1 \, T_f \, V_c \, c_2}{S_c \, e_T}$$

Table 4.2.2.8-1 (cont.).

where:

E_v = emission factor for VOC, mass per vehicle (lb/vehicle) (exclusive of any add-on control devices)
A_v = area coated per vehicle (ft^2/vehicle)
c_1 = conversion factor: 1 ft/12,000 mil
T_f = thickness of the dry coating film (mil)
V_c = VOC (organic solvent) content of coating as applied, less water (lb VOC/gal coating, less water)
c_2 = conversion factor: 7.48 gal/ft^3
S_c = solids in coating as applied, volume fraction (gal solids/gal coating)
e_T = transfer efficiency fraction (fraction of total coating solids used that remains on coated parts)

Example: The VOC emissions per automobile from a cathodic electrodeposited prime coat.

$$E_v \text{ mass of VOC} = \frac{(850\ ft^2)\ (1/12000)\ (0.6\ mil)\ (1.2\ lb/gal\text{-}H_2O)\ (7.58\ gal/ft^3)}{(0.84\ gal/gal)\ (1.00)}$$

$$= 0.45 \text{ lb VOC/vehicle } (0.21 \text{ kg VOC/vehicle})$$

[b] Based on an average line speed of 55 automobiles/hr.
[c] Based on an average line speed of 38 light duty trucks/hr.

Table 4.2.2.8-2 (English Units). PARAMETERS FOR THE AUTOMOBILE SURFACE COATING INDUSTRY[a]

Application	Area Coated Per Vehicle, ft^2	Film Thickness, mil	VOC Content, lb/gal-H_2O	Volume Fraction Solids, gal/gal-H_2O	Transfer Efficiency, %
Prime coat					
Solventborne spray	450 (220-570)	0.8 (0.3-2.5)	5.7 (4.2-6.0)	0.22 (0.20-0.35)	40 (35-50)
Cathodic electrodeposition	850 (660-1060)	0.6 (0.5-0.8)	1.2 (1.2-1.5)	0.84 (0.84-0.87)	100 (85-100)
Guide coat					
Solventborne spray	200 (170-280)	0.8 (0.5-1.5)	5.0 (3.0-5.6)	0.30 (0.25-0.55)	40 (35-65)
Waterborne spray	200 (170-280)	0.8 (0.5-2.0)	2.8 (2.6-3.0)	0.62 (0.60-0.65)	30 (25-40)
Topcoat					
Solventborne spray					
Lacquer	240 (170-280)	2.5 (1.0-3.0)	6.2 (5.8-6.6)	0.12 (0.10-0.13)	40 (30-65)
Dispersion lacquer	240 (170-280)	2.5 (1.0-3.0)	5.8 (4.9-5.8)	0.17 (0.17-0.27)	40 (30-65)
Enamel	240 (170-280)	2.5 (1.0-3.0)	5.0 (3.0-5.6)	0.30 (0.25-0.55)	40 (30-65)
Base coat/clear coat[b]	240	2.5	4.7	0.33	40
Base coat	240 (170-280)	1.0 (0.8-1.0)	5.6 (3.4-6.4)	0.20 (0.13-0.48)	40 (30-50)
Clear coat	240 (170-280)	1.5 (1.2-1.5)	4.0 (3.0-5.1)	0.42 (0.30-0.54)	40 (30-65)
Waterborne spray	240 (170-280)	2.2 (1.0-2.5)	2.8 (2.6-3.0)	0.62 (0.60-0.65)	30 (25-40)

[a] All values for coatings as applied except for VOC content and volume fraction solids that are for coatings as applied minus water. Ranges in parentheses. Low VOC content (high solids) base coat/clear coats are still undergoing testing and development.

[b] Composite of base coat and clear coat.

Table 4.2.2.8-3 (English Units). PARAMETERS FOR THE LIGHT DUTY TRUCK SURFACE COATING INDUSTRY[a]

Application	Area Coated Per Vehicle, ft^2	Film Thickness, mil	VOC Content, lb/gal-H_2O	Volume Fraction Solids, gal/gal-H_2O	Transfer Efficiency, %
Prime coat					
Solventborne spray	875 (300-1000)	1.2 (0.7-1.7)	5.7 (4.2-6.0)	0.22 (0.20-0.35)	40 (35-50)
Cathodic electrodeposition	1100 (850-1250)	0.6 (0.5-0.8)	1.2 (1.2-1.5)	0.84 (0.84-0.87)	100 (85-100)
Guide coat					
Solventborne spray	675 (180-740)	0.8 (0.7-1.7)	5.0 (3.0-5.6)	0.30 (0.25-0.55)	40 (35-65)
Waterborne spray	675 (180-740)	0.8 (0.5-2.0)	2.8 (2.6-3.0)	0.62 (0.60-0.65)	30 (25-40)
Topcoat					
Solventborne spray					
Enamel	750 (300-900)	2.0 (1.0-2.5)	5.0 (3.0-5.6)	0.30 (0.25-0.55)	40 (30-65)
Base coat/clear coat[b]	750	2.5	4.7	0.33	40
Base coat	750 (300-900)	1.0 (0.8-1.0)	5.6 (3.4-6.4)	0.20 (0.13-0.48)	40 (30-50)
Clear coat	750 (300-900)	1.5 (1.2-1.5)	4.0 (3.0-5.1)	0.42 (0.30-0.54)	40 (30-65)
Waterborne spray	750 (300-900)	2.2 (1.0-2.5)	2.8 (2.6-3.0)	0.62 (0.60-0.65)	30 (25-40)

[a] All values for coatings as applied, except for VOC content and volume fraction solids that are for coatings as applied minus water. Ranges in parentheses. Low VOC content (high solids) base coat/clear coats are still undergoing testing and development.

[b] Composite of typical base coat and clear coat.

References For Section 4.2.2.8

1. *Control Of Volatile Organic Emissions From Existing Stationary Sources — Volume II: Surface Coating Of Cans, Coils, Paper Fabrics, Automobiles, And Light Duty Trucks*, EPA-450/2-77-008, U. S. Environmental Protection Agency, Research Triangle Park, NC, May 1977.

2. *Study To Determine Capabilities To Meet Federal EPA Guidelines For Volatile Organic Compound Emissions*, General Motors Corporation, Detroit, MI, November 1978.

3. *Automobile And Light Duty Truck Surface Coating Operations — Background Information For Proposed Standards*, EPA-450/3-79-030, U. S. Environmental Protection Agency, Research Triangle Park, NC, September 1979.

4. Written communication from D. A. Frank, General Motors Corporation, Warren, MI, to H. J. Modetz, Acurex Corporation, Morrisville, NC, April 14, 1981.

4.2.2.9 Pressure Sensitive Tapes And Labels

4.2.2.9.1 General[1-5]

The coating of pressure sensitive tapes and labels (PSTL) is an operation in which some backing material (paper, cloth, or film) is coated to create a tape or label product that sticks on contact. The term "pressure sensitive" indicates that the adhesive bond is formed on contact, without wetting, heating, or adding a curing agent.

The products manufactured by the PSTL surface coating industry may have several different types of coatings applied to them. The 2 primary types of coatings are adhesives and releases. Adhesive coating is a necessary step in the manufacture of almost all PSTL products. It is generally the heaviest coating (typically 0.051 kg/m^2, or 0.011 lb/ft^2 and therefore has the highest level of solvent emissions (generally 85 to 95 percent of total line emissions).

Release coatings are applied to the backside of tape or to the mounting paper of labels. The function of release coating is to allow smooth and easy unrolling of a tape or removal of a label from mounting paper. Release coatings are applied in a very thin coat (typically 0.00081 kg/m^2, or 0.00017 lb/ft^2). This thin coating produces less emissions than does a comparable size adhesive coating line.

Five basic coating processes can be used to apply both adhesive and release coatings:

solvent base coating
waterborne (emulsion) coating
100 percent solids (hot melt) coating
calender coating
prepolymer coating

A solvent base coating process is used to produce 80 to 85 percent of all products in the PSTL industry, and essentially all of the solvent emissions from the industry result from solvent base coating. Because of its broad application and significant emissions, solvent base coating of PSTL products is discussed in greater detail.

4.2.2.9.2 Process Description[1-2,5]

Solvent base surface coating is conceptually a simple process. A continuous roll of backing material (called the web) is unrolled, coated, dried, and rolled again. A typical solvent base coating line is shown in Figure 4.2.2.9-1. Large lines in this industry have typical web widths of 152 centimeters (60 in.), while small lines are generally 48 centimeters (24 in.). Line speeds vary substantially, from 3 to 305 meters per minute (10 to 1000 ft/min). To initiate the coating process the continuous web material is unwound from its roll. It travels to a coating head, where the solvent base coating formulation is applied. These formulations have specified levels of solvent and coating solids by weight. Solvent base adhesive formulations contain approximately 67 weight percent solvent and 33 weight percent coating solids. Solvent base releases average about 95 weight percent solvent and 5 weight percent coating solids. Solvents used include toluene, xylene, heptane, hexane, and methyl ethyl ketone. The coating solids portion of the formulations consists of elastomers (natural rubber, styrene-butadiene rubber, polyacrylates), tackifying resins (polyterpenes, rosins, petroleum

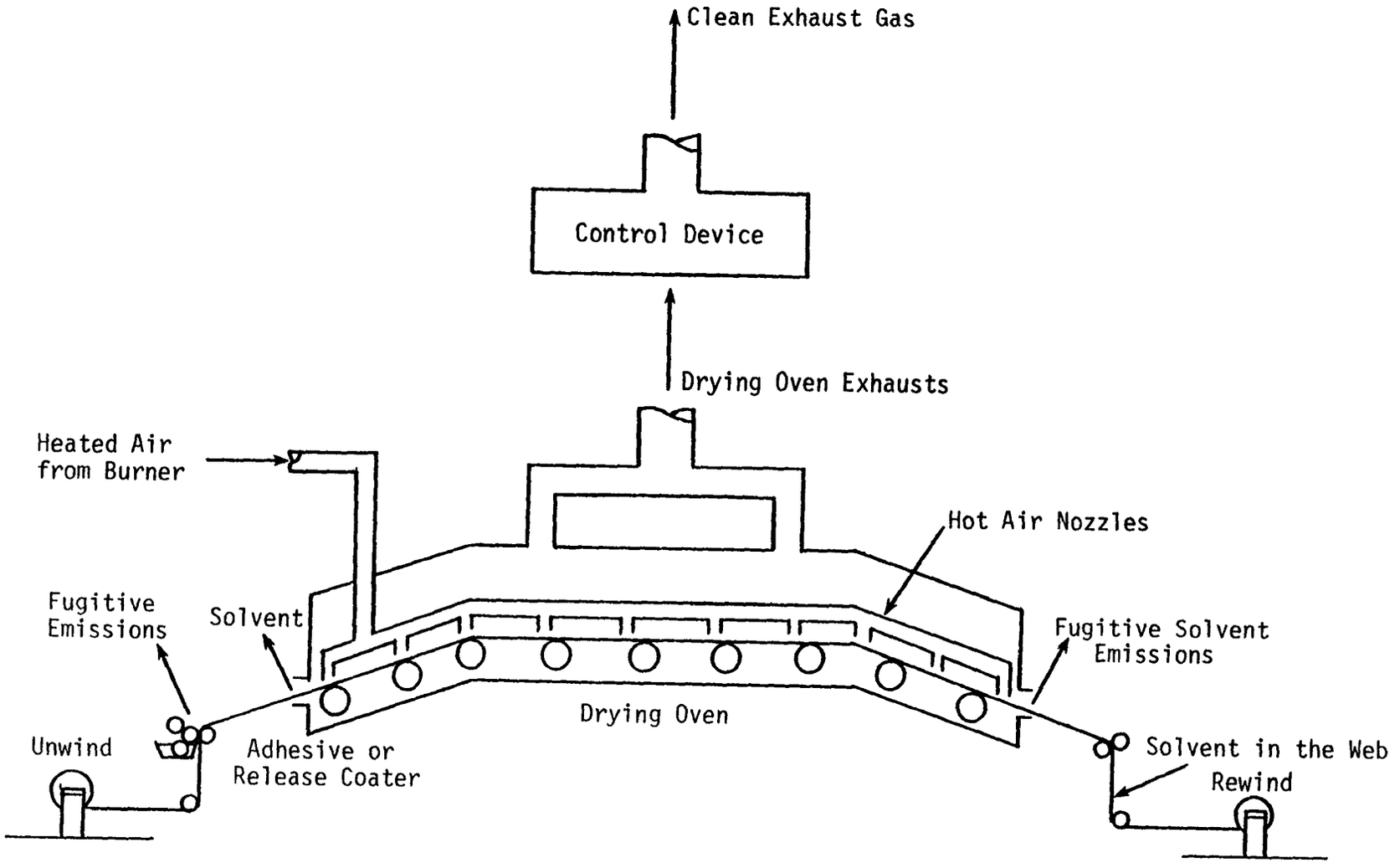

Figure 4.2.2.9-1. Diagram of a pressure sensitive tape and label coating line.

hydrocarbon resins, asphalts), plasticizers (phthalate esters, polybutenes, mineral oil), and fillers (zinc oxide, silica, clay).

The order of application is generally release coat, primer coat (if any), and adhesive coat. A web must always have a release coat before the adhesive can be applied. Primer coats are not required on all products, generally being applied to improve the performance of the adhesive.

Three basic categories of coating heads are used in the PSTL industry. The type of coating head used has a great effect on the quality of the coated product, but only a minor effect on overall emissions. The first type operates by applying coating to the web and scraping excess off to a desired thickness. Examples of this type of coater are the knife coater, blade coater, and metering rod coater. The second category of coating head meters on a specific amount of coating. Gravure and reverse roll coaters are the most common examples. The third category of coating head does not actually apply a surface coating, but rather it saturates the web backing. The most common example in this category is the dip and squeeze coater.

After solvent base coatings have been applied, the web moves into the drying oven where the solvents are evaporated from the web. The important characteristics of the drying oven operation are:

source of heat
temperature profile
residence time
allowable hydrocarbon concentration in the dryer
oven air circulation

Two basic types of heating are used in conventional drying ovens, direct and indirect. Direct heating routes the hot combustion gases (blended with ambient air to the proper temperature) directly into the drying zone. With indirect heating, the incoming oven air stream is heated in a heat exchanger with steam or hot combustion gases but does not physically mix with them. Direct-fired ovens are more common in the PSTL industry because of their higher thermal efficiency. Indirect heated ovens are less energy efficient in both the production of steam and the heat transfer in the exchanger.

Drying oven temperature control is an important consideration in PSTL production. The oven temperature must be above the boiling point of the applied solvent. However, the temperature profile must be controlled by using multizoned ovens. Coating flaws known as "craters" or "fish eyes" will develop if the initial drying proceeds too quickly. These ovens are physically divided into several sections, each with its own hot air supply and exhaust. By keeping the temperature of the first zone low, and then gradually increasing it in subsequent zones, uniform drying can be accomplished without flaws. After exiting the drying oven, the continuous web is wound on a roll, and the coating process is complete.

4.2.2.9.3 Emissions[1,6-10]

The only pollutants emitted in significant quantities from solvent base coating of pressure sensitive tapes and labels are volatile organic compounds (VOC) from solvent evaporation. In an uncontrolled facility, essentially all of the solvent used in the coating formulation is emitted to the atmosphere. Of these uncontrolled emissions, 80 to 95 percent are emitted with the drying oven exhaust. Some solvent (from zero to 5 percent) can remain in the final coated product, although this solvent will eventually evaporate into the atmosphere. The remainder of applied solvent is lost from a

number of small sources as fugitive emissions. The major VOC emission points in a PSTL surface coating operation are indicated in Figure 4.2.2.9-1.

There are also VOC losses from solvent storage and handling, equipment cleaning, miscellaneous spills, and coating formulation mixing tanks. These emissions are not addressed here, as these sources have a comparatively small quantity of emissions.

Fugitive solvent emissions during the coating process come from the evaporative loss of solvent around the coating head and from the exposed wet web prior to its entering the drying oven. The magnitude of these losses is determined by the width of the web, the line speed, the volatility and temperature of the solvent, and the air turbulence in the coating area.

Two factors that directly determine total line emissions are the weight (thickness) of the applied coating on the web and the solvent/solids ratio of the coating formulations. For coating formulations with a constant solvent/solids ratio during coating, any increases in coating weight would produce higher levels of VOC emissions. The solvent/solids ratio in coating formulations is not constant industrywide. This ratio varies widely among products. If a coating weight is constant, greater emissions will be produced by increasing the weight percent solvent of a particular formulation.

These 2 operating parameters, combined with line speed, line width, and solvent volatility, produce a number of potential mass emission situations. Table 4.2.2.9-1 presents emission factors for controlled and uncontrolled PSTL surface coating operations. The potential amount of VOC emissions from the coating process is equal to the total amount of solvent applied at the coating head.

4.2.2.9.4 Controls[1,6-18]

The complete air pollution control system for a modern pressure sensitive tape or label surface coating facility consists of 2 sections, the solvent vapor capture system and the emission control device. The capture system collects VOC vapors from the coating head, the wet web, and the drying oven. The captured vapors are directed to a control device to be either recovered (as liquid solvent) or destroyed. As an alternate emission control technique, the PSTL industry is also using low-VOC content coatings to reduce their VOC emissions. Waterborne and hot melt coatings and radiation-cured prepolymers are examples of these low-VOC-content coatings. Emissions of VOC from such coatings are negligible or zero. Low-VOC-content coatings are not universally applicable to the PSTL industry, but about 25 percent of the production in this industry is presently using these innovative coatings.

4.2.2.9.4.1 Capture Systems -

In a typical PSTL surface coating facility, 80 to 95 percent of VOC emissions from the coating process is captured in the coating line drying ovens. Fans are used to direct drying oven emissions to a control device. In some facilities, a portion of the drying oven exhaust is recirculated into the oven instead of to a control device. Recirculation is used to increase the VOC concentration of the drying oven exhaust gases going to the control device.

Another important aspect of capture in a PSTL facility involves fugitive VOC emissions. Three techniques can be used to collect fugitive VOC emissions from PSTL coating lines. The first involves the use of floor sweeps and/or hooding systems around the coating head and exposed coated web. Fugitive emissions collected in the hoods can be directed into the drying oven and on to a control device, or they can be sent directly to the control device. The second capture technique involves enclosing the entire coating line or the coating application and flashoff areas. By

Table 4.2.2.9-1 (Metric And English Units). EMISSION FACTORS FOR PRESSURE SENSITIVE TAPE AND LABEL SURFACE COATING OPERATIONS

EMISSION FACTOR RATING: C

Emission Points	Nonmethane VOC[a]		
	Uncontrolled, kg/kg (lb/lb)	85% Control, kg/kg (lb/lb)	90% Control, kg/kg (lb/lb)
Drying oven exhaust[b]	0.80 - 0.95	—	—
Fugitives[c]	0.01 - 0.15	0.01 - 0.095	0.0025 - 0.0425
Product retention[d]	0.01 - 0.05	0.01 - 0.05	0.01 - 0.05
Control device[e]	—	0.045	0.0475
Total emissions[f]	1.0	0.15	0.10

[a] Expressed as the mass of volatile organic compounds (VOC) emitted per mass of total solvent used. Solvent is assumed to consist entirely of VOC.
[b] References 1,6-7,9. Dryer exhaust emissions depend on coating line operating speed, frequency of line downtime, coating composition, and oven design.
[c] Determined by difference between total emissions and other point sources. Magnitude is determined by size of the line equipment, line speed, volatility and temperature of the solvents, and air turbulence in the coating area.
[d] References 6-8. Solvent in the product eventually evaporates into the atmosphere.
[e] References 1,10,17-18. Emissions are residual content in captured solvent-laden air vented after treatment. Controlled coating line emissions are based on an overall reduction efficiency which is equal to capture efficiency times control device efficiency. For 85% control, capture efficiency is 90% with a 95% efficient control device. For 90% control, capture efficiency is 95% with a 95% efficient control device.
[f] Values assume that uncontrolled coating lines eventually emit 100% of all solvents used.

maintaining a slight negative pressure within the enclosure, a capture efficiency of 100 percent is theoretically possible. The captured emissions are directed by fans into the oven or to a control device. The third capture technique is an expanded form of total enclosure. The entire building or structure which houses the coating line acts as an enclosure. The entire room air is vented to a control device. The maintenance of a slight negative pressure ensures that very few emissions escape the room.

The efficiency of any vapor capture system is highly dependent on its design and its degree of integration with the coating line equipment configuration. The design of any system must allow safe and adequate access to the coating line equipment for maintenance. The system must also be designed to protect workers from exposure to unhealthy concentrations of the organic solvents used in the surface coating processes. The efficiency of a well-designed combined dryer exhaust and fugitive capture system is 95 percent.

4.2.2.9.4.2 Control Devices -

The control devices and/or techniques that may be used to control captured VOC emissions can be classified into 2 categories, solvent recovery and solvent destruction. Fixed-bed carbon

adsorption is the primary solvent recovery technique used in this industry. In fixed-bed adsorption, the solvent vapors are adsorbed onto the surface of activated carbon, and the solvent is regenerated by steam. Solvent recovered in this manner may be reused in the coating process or sold to a reclaimer. The efficiency of carbon adsorption systems can reach 98 percent, but a 95 percent efficiency is more characteristic of continuous long term operation.

The primary solvent destruction technique used in the PSTL industry is thermal incineration, which can be as high as 99 percent efficient. However, operating experience with incineration devices has shown that 95 percent efficiency is more characteristic. Catalytic incineration could be used to control VOC emissions with the same success as thermal incineration, but no catalytic devices have been found in the industry.

The efficiencies of carbon adsorption and thermal incineration control techniques on PSTL coating VOC emissions have been determined to be equal. Control device emission factors presented in Table 4.2.2.9-1 represent the residual VOC content in the exhaust air after treatment.

The overall emission reduction efficiency for VOC emission control systems is equal to the capture efficiency times the control device efficiency. Emission factors for 2 control levels are presented in Table 4.2.2.9-1. The 85 percent control level represents 90 percent capture with a 95 percent efficient control device. The 90 percent control level represents 95 percent capture with a 95 percent efficient control device.

References For Section 4.2.2.9

1. *The Pressure Sensitive Tape And Label Surface Coating Industry—Background Information Document*, EPA-450/3-80-003a, U. S. Environmental Protection Agency, Research Triangle Park, NC, September 1980.

2. *State Of California Tape And Label Coaters Survey*, California Air Resources Board, Sacramento, CA, April 1978. Confidential.

3. M. R. Rifi, "Water Based Pressure Sensitive Adhesives, Structure vs. Performance", presented at Technical Meeting On Water Based Systems, Chicago, IL, June 21-22, 1978.

4. *Pressure Sensitive Products And Adhesives Market*, Frost and Sullivan Inc., Publication No. 614, New York, NY, November 1978.

5. Silicone Release Questionnaire, Radian Corporation, Research Triangle Park, NC, May 4, 1979. Confidential.

6. Written communication from Frank Phillips, 3M Company, to G. E. Harris, Radian Corporation, Research Triangle Park, NC, October 5, 1978. Confidential.

7. Written communication from R. F. Baxter, Avery International, to G. E. Harris, Radian Corporation, Research Triangle Park, NC, October 16, 1978. Confidential.

8. G. E. Harris, "Plant Trip Report, Shuford Mills, Hickory, NC", Radian Corporation, Research Triangle Park, NC, July 28, 1978.

9. T. P. Nelson, "Plant Trip Report, Avery International, Painesville, OH", Radian Corporation, Research Triangle Park, NC, July 26, 1979.

10. *Control Of Volatile Organic Emissions From Existing Stationary Sources—Volume II: Surface Coating Of Cans, Coils, Paper, Fabrics, Automobiles, And Light Duty Trucks*, EPA-450/2-77-008, U. S. Environmental Protection Agency, Research Triangle Park, NC, May 1977.

11. Ben Milazzo, "Pressure Sensitive Tapes", *Adhesives Age*, 22:27-28, March 1979.

12. T. P. Nelson, "Trip Report For Pressure Sensitive Adhesives—Adhesives Research, Glen Rock, PA", Radian Corporation, Research Triangle Park, NC, February 16, 1979.

13. T. P. Nelson, "Trip Report For Pressure Sensitive Adhesives—Precoat Metals, St. Louis, MO", Radian Corporation, Research Triangle Park, NC, August 28, 1979.

14. G. W. Brooks, "Trip Report For Pressure Sensitive Adhesives—E. J. Gaisser, Incorporated, Stamford, CT", Radian Corporation, Research Triangle Park, NC, September 12, 1979.

15. Written communication from D. C. Mascone to J. R. Farmer, Office Of Air Quality Planning And Standards, U.S. Environmental Protection Agency, Research Triangle Park, NC, June 11, 1980.

16. Written communication from R. E. Miller, Adhesives Research, Incorporated, to T. P. Nelson, Radian Corporation, Research Triangle Park, NC, June 18, 1979.

17. A. F. Sidlow, *Source Test Report Conducted At Fasson Products, Division Of Avery Corporation, Cucamonga, CA*, San Bernardino County Air Pollution Control District, San Bernardino, CA, January 26, 1972.

18. R. Milner, *et al.*, *Source Test Report Conducted At Avery Label Company, Monrovia, CA*, Los Angeles Air Pollution Control District, Los Angeles, CA, March 18, 1975.

4.2.2.10 Metal Coil Surface Coating

4.2.2.10.1 General[1-2]

Metal coil surface coating (coil coating) is the linear process by which protective or decorative organic coatings are applied to flat metal sheet or strip packaged in rolls or coils. Although the physical configurations of coil coating lines differ from one installation to another, the operations generally follow a set pattern. Metal strip is uncoiled at the entry to a coating line and is passed through a wet section, where the metal is thoroughly cleaned and is given a chemical treatment to inhibit rust and to promote coatings adhesion to the metal surface. In some installations, the wet section contains an electrogalvanizing operation. Then the metal strip is dried and sent through a coating application station, where rollers coat one or both sides of the metal strip. The strip then passes through an oven where the coatings are dried and cured. As the strip exits the oven, it is cooled by a water spray and again dried. If the line is a tandem line, there is first the application of a prime coat, followed by another of top or finish coat. The second coat is also dried and cured in an oven, and the strip is again cooled and dried before being rewound into a coil and packaged for shipment or further processing. Most coil coating lines have accumulators at the entry and exit that permit continuous metal strip movement through the coating process while a new coil is mounted at the entry or a full coil removed at the exit. Figure 4.2.2.10-1 is a flow diagram of a coil coating line.

Coil coating lines process metal in widths ranging from a few centimeters to 183 centimeters (72 inches), and in thicknesses of from 0.018 to 0.229 centimeters (0.007 to 0.090 inches). The speed of the metal strip through the line is as high as 3.6 meters per second (700 feet per minute [ft/min]) on some of the newer lines.

A wide variety of coating formulations is used by the coil coating industry. The more prevalent coating types include polyesters, acrylics, polyfluorocarbons, alkyds, vinyls and plastisols. About 85 percent of the coatings used are organic solvent base and have solvent contents ranging from near 0 to 80 volume percent, with the prevalent range being 40 to 60 volume percent. Most of the remaining 15 percent of coatings are waterborne, but they contain organic solvent in the range of 2 to 15 volume percent. High solids coatings, in the form of plastisols, organosols, and powders, are also used to some extent by the industry, but the hardware is different for powder applications.

The solvents most often used in the coil coating industry include xylene, toluene, methyl ethyl ketone (MEK), Cellosolve Acetate™, butanol, diacetone alcohol, Cellosolve™, Butyl Cellosolve™, Solvesso 100 and 150™, isophorone, butyl carbinol, mineral spirits, ethanol, nitropropane, tetrahydrofuran, Panasolve™, methyl isobutyl ketone, Hisol 100™, Tenneco T-125™, isopropanol, and diisoamyl ketone.

Coil coating operations can be classified in 1 of 2 operating categories, toll coaters and captive coaters. The toll coater is a service coater who works for many customers according to the needs and specifications of each. The coated metal is delivered to the customer, who forms the end products. Toll coaters use many different coating formulations and normally use mostly organic solvent-base coatings. Major markets for toll coating operations include the transportation industry, the construction industry, and appliance, furniture, and container manufacturers. The captive coater is normally 1 operation in a manufacturing process. Many steel and aluminum companies have their own coil coating operations, where the metal they produce is coated and then formed into end

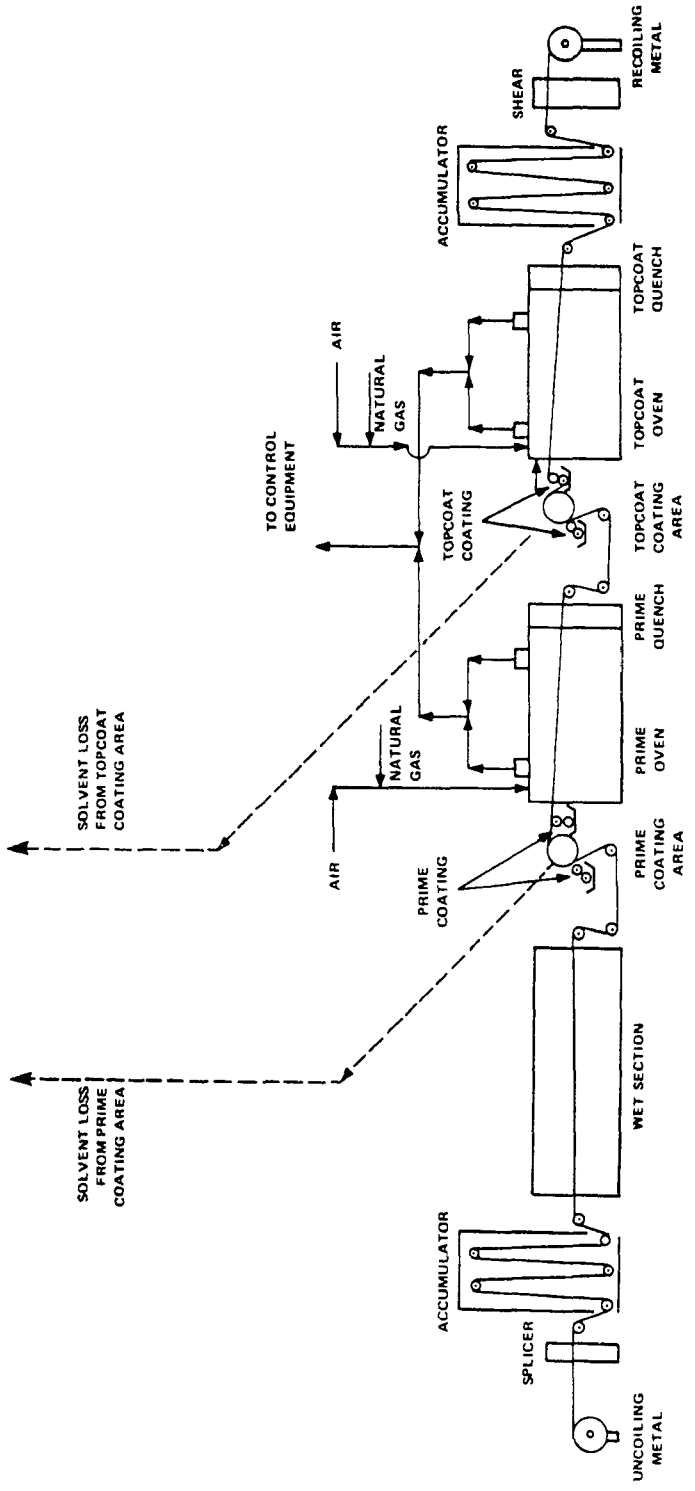

Figure 4.2.2.10-1. Flow diagram of model coil coating line.

products. Captive coaters are much more likely to use water-base coatings because the metal coated is often used for only a few end products. Building products such as aluminum siding are one of the more important uses of waterborne metal coatings.

4.2.2.10.2 Emissions And Controls[1-12]

Volatile organic compounds (VOC) are the major pollutants emitted from metal coil surface coating operations. Specific operations that emit VOC are the coating application station, the curing oven and the quench area. These are identified in Figure 4.2.2.10-1. VOC emissions result from the evaporation of organic solvents contained in the coating. The percentage of total VOC emissions given off at each emission point varies from one installation to another, but, on the average, about 8 percent is given off at the coating application station, 90 percent the oven and 2 percent the quench area. On most coating lines, the coating application station is enclosed or hooded to capture fugitive emissions and to direct them into the oven. The quench is an enclosed operation located immediately adjacent to the exit end of the oven so that a large fraction of the emissions given off at the quench is captured and directed into the oven by the oven ventilating air. In operations such as these, approximately 95 percent of the total emissions are exhausted by the oven, and the remaining 5 percent escape as fugitive emissions.

The rate of VOC emissions from individual coil coating lines may vary widely from one installation to another. Factors that affect the emission rate include VOC content of coatings as applied, VOC density, area of metal coated, solids content of coatings as applied, thickness of the applied coating and number of coats applied. Because the coatings are applied by roller coating, transfer efficiency is generally considered to approach 100 percent and therefore does not affect the emission rate.

Two emission control techniques are widespread in the coil coating industry, incineration and use of low-VOC-content coatings. Incinerators may be either thermal or catalytic, both of which have been demonstrated to achieve consistently a VOC destruction efficiency of 95 percent or greater. When used with coating rooms or hoods to capture fugitive emissions, incineration systems can reduce overall emissions by 90 percent or more.

Waterborne coatings are the only low-VOC-content coating technology that is used to a significant extent in the coil coating industry. These coatings have substantially lower VOC emissions than most of the organic solventborne coatings. Waterborne coatings are used as an emission control technique most often by installations that coat metal for only a few products, such as building materials. Many such coaters are captive to the firm that produces and sells the products fabricated from the coated coil. Because waterborne coatings have not been developed for many coated metal coil uses, most toll coaters use organic solventborne coatings and control their emissions by incineration. Most newer incinerator installations use heat recovery to reduce the operating cost of an incineration system.

Emission factors for coil coating operations and the equations used to compute them are presented in Table 4.2.2.10-1. The values presented therein represent maximum, minimum, and average emissions from small, medium, and large coil coating lines. An average film thickness and an average solvent content are assumed to compute the average emission factor. Values for the VOC content near the maximum and minimum used by the industry are assumed for the calculations of maximum and minimum emission factors.

The emission factors in Table 4.2.2.10-1 are useful in estimating VOC emissions for a large sample of coil coating sources, but they may not be applicable to individual plants. To estimate the

emissions from a specific plant, operating parameters of the coil coating line should be obtained and used in the equation given in the footnote to Table 4.2.2.10-1. If different coatings are used for prime and topcoats, separate calculations must be made for each coat. Operating parameters on which the emission factors are based are presented in Table 4.2.2.10-2.

Table 4.2.2.10-1 (Metric And English Units). VOC EMISSION FACTORS FOR COIL COATING[a]

EMISSION FACTOR RATING: C

Coatings	kg/hr (lb/hr)		kg/m^2 (lb/ft^2)	
	Average	Normal Range	Average	Normal Range
Solventborne Uncontrolled	303 (669)	50 - 1,798 (110 - 3,964)	0.060 (0.012)	0.027 - 0.160 (0.006 - 0.033)
Controlled[b]	30 (67)	5 - 180 (11 - 396)	0.0060 (0.0012)	0.0027 - 0.0160 (0.0006 - 0.0033)
Waterborne	50 (111)	3 - 337 (7 - 743)	0.0108 (0.0021)	0.0011 - 0.0301 (0.0003 - 0.0062)

[a] All nonmethane VOC. Factors are calculated using the following equations and the operating parameters given in Table 4.2.2.10-2.

$$E = \frac{0.623\ ATVD}{S} \qquad (1)$$

where:

E = Mass of VOC emissions per hour (lb/hr)
A = Area of metal coated per hour (ft^2)
= Line speed (ft/min) x strip width (ft) x 60 min/hr
T = Total dry film thickness of coatings applied (in.).
V = VOC content of coatings (fraction by volume)
D = VOC density (assumed to be 7.36 lb/gal)
S = Solids content of coatings (fraction by volume)

The constant 0.623 represents conversion factors of 7.48 gal/ft^3 divided by the conversion factor of 12 in./ft.

$$M = \frac{E}{A} \qquad (2)$$

where:

M = Mass of VOC emissions per unit area coated.

[b] Computed by assuming a 90% overall control efficiency (95% capture and 95% removal by the control device).

Table 4.2.2.10-2 (English Units). OPERATING PARAMETERS FOR SMALL, MEDIUM, AND LARGE COIL COATING LINES[a]

Line Size	Line Speed (ft/min)	Strip Width (ft)	Total Dry Film Thickness[b] (in.)	VOC Content[c] (fraction)	Solids Content[c] (fraction)	VOC Density[b] (lb/gal)
Solventborne coatings						
Small	200	1.67	0.0018	0.40	0.60	7.36
Medium	300	3	0.0018	0.60	0.40	7.36
Large	500	4	0.0018	0.80	0.20	7.36
Waterborne coatings						
Small	200	1.67	0.0018	0.02	0.50	7.36
Medium	300	3	0.0018	0.10	0.40	7.36
Large	500	4	0.0018	0.15	0.20	7.36

[a] Obtained from Reference 3.
[b] Average value assumed for emission factor calculations. Actual values should be used to estimate emissions from individual sources.
[c] All three values of VOC content and solids content were used in the calculation of emission factors for each plant size to give maximum, minimum, and average emission factors.

References For Section 4.2.2.10

1. *Metal Coil Surface Coating Industry — Background Information For Proposed Standards*, EPA- 450/3-80-035a, U. S. Environmental Protection Agency, Research Triangle Park, NC, October 1980.

2. *Control Of Volatile Organic Emissions From Existing Stationary Sources Volume II: Surface Coating Of Cans, Coils, Paper, Fabrics, Automobiles, And Light Duty Trucks*, EPA-450/2-77-008, U. S. Environmental Protection Agency, Research Triangle Park, NC, May 1977.

3. Unpublished survey of the Coil Coating Industry, Office Of Water And Waste Management, U.S. Environmental Protection Agency, Washington, DC, 1978.

4. Communication between Milton Wright, Research Triangle Institute, Research Triangle Park, NC, and Bob Morman, Glidden Paint Company, Strongville, OH, June 27, 1979.

5. Communication between Milton Wright, Research Triangle Institute, Research Triangle Park, NC, and Jack Bates, DeSoto, Incorporated, Des Plaines, IL, June 25, 1980.

6. Communication between Milton Wright, Research Triangle Institute, Research Triangle Park, NC, and M. W. Miller, DuPont Corporation, Wilmington, DE, June 26, 1980.

7. Communication between Milton Wright, Research Triangle Institute, Research Triangle Park, NC, and H. B. Kinzley, Cook Paint and Varnish Company, Detroit, MI, June 27, 1980.

8. Written communication from J. D. Pontius, Sherwin Williams, Chicago, IL, to J. Kearney, Research Triangle Institute, Research Triangle Park, NC, January 8, 1980.

9. Written communication from Dr. Maynard Sherwin, Union Carbide, South Charleston, WV, to Milton Wright, Research Triangle Institute, Research Triangle Park, NC, January 21, 1980.

10. Written communication from D. O. Lawson, PPG Industries, Springfield, PA, to Milton Wright, Research Triangle Institute, Research Triangle Park, NC, February 8, 1980.

11. Written communication from National Coil Coaters Association, Philadelphia, PA, to Office Of Air Quality Planning And Standards, U. S. Environmental Protection Agency, Research Triangle Park, NC, May 30, 1980.

12. Written communication from Paul Timmerman, Hanna Chemical Coatings Corporation, Columbus, OH, to Milton Wright, Research Triangle Institute, Research Triangle Park, NC, July 1, 1980.

4.2.2.11 Large Appliance Surface Coating

4.2.2.11.1 General[1]

Large appliance surface coating is the application of protective or decorative organic coatings to preformed large appliance parts. For this discussion, large appliances are defined as any metal range, oven, microwave oven, refrigerator, freezer, washing machine, dryer, dishwasher, water heater, or trash compactor.

Regardless of the appliance, similar manufacturing operations are involved. Coiled or sheet metal is cut and stamped into the proper shapes, and the major parts are welded together. The welded parts are cleaned with organic degreasers or a caustic detergent (or both) to remove grease and mill scale accumulated during handling, and the parts are then rinsed in one or more water rinses. This is often followed by a process to improve the grain of the metal before treatment in a phosphate bath. Iron or zinc phosphate is commonly used to deposit a microscopic matrix of crystalline phosphate on the surface of the metal. This process provides corrosion resistance and increases the surface area of the part, thereby allowing superior coating adhesion. Often the highly reactive metal is protected with a rust inhibitor to prevent rusting prior to painting.

Two separate coatings have traditionally been applied to these prepared appliance parts: a protective prime coating that also covers surface imperfections and contributes to total coating thickness, and a final, decorative topcoat. Single-coat systems, where only a prime coat or only a topcoat is applied, are becoming more common. For parts not exposed to customer view, a prime coat alone may suffice. For exposed parts, a protective coating may be formulated and applied so as to act as the topcoat. There are many different application techniques in the large appliance industry, including manual, automatic, and electrostatic spray operations, and several dipping methods. Selection of a particular method depends largely upon the geometry and use of the part, the production rate, and the type of coating being used. Typical application of these coating methods is shown in Figure 4.2.2.11-1.

A wide variety of coating formulations is used by the large appliance industry. The prevalent coating types include epoxies, epoxy/acrylics, acrylics, and polyester enamels. Liquid coatings may use either an organic solvent or water as the main carrier for the paint solids.

Waterborne coatings are of 3 major classes: water solutions, water emulsions, and water dispersions. All of the waterborne coatings, however, contain a small amount (up to 20 volume percent) of organic solvent that acts as a stabilizing, dispersing or emulsifying agent. Waterborne systems offer some advantages over organic solvent systems. They do not exhibit as great an increase in viscosity with increasing molecular weight of solids, they are nonflammable, and they have limited toxicity. But because of the relatively slow evaporation rate of water, it is difficult to achieve a smooth finish with waterborne coatings. A bumpy "orange peel" surface often results. For this reason, their main use in the large appliance industry is as prime coats.

While conventional organic solventborne coatings also are used for prime coats, they predominate as topcoats. This is due in large part to the controllability of the finish and the amenability of these materials to application by electrostatic spray techniques. The most common organic solvents are ketones, esters, ethers, aromatics, and alcohols. To obtain or maintain certain application characteristics, solvents are often added to coatings at the plant. The use of powder

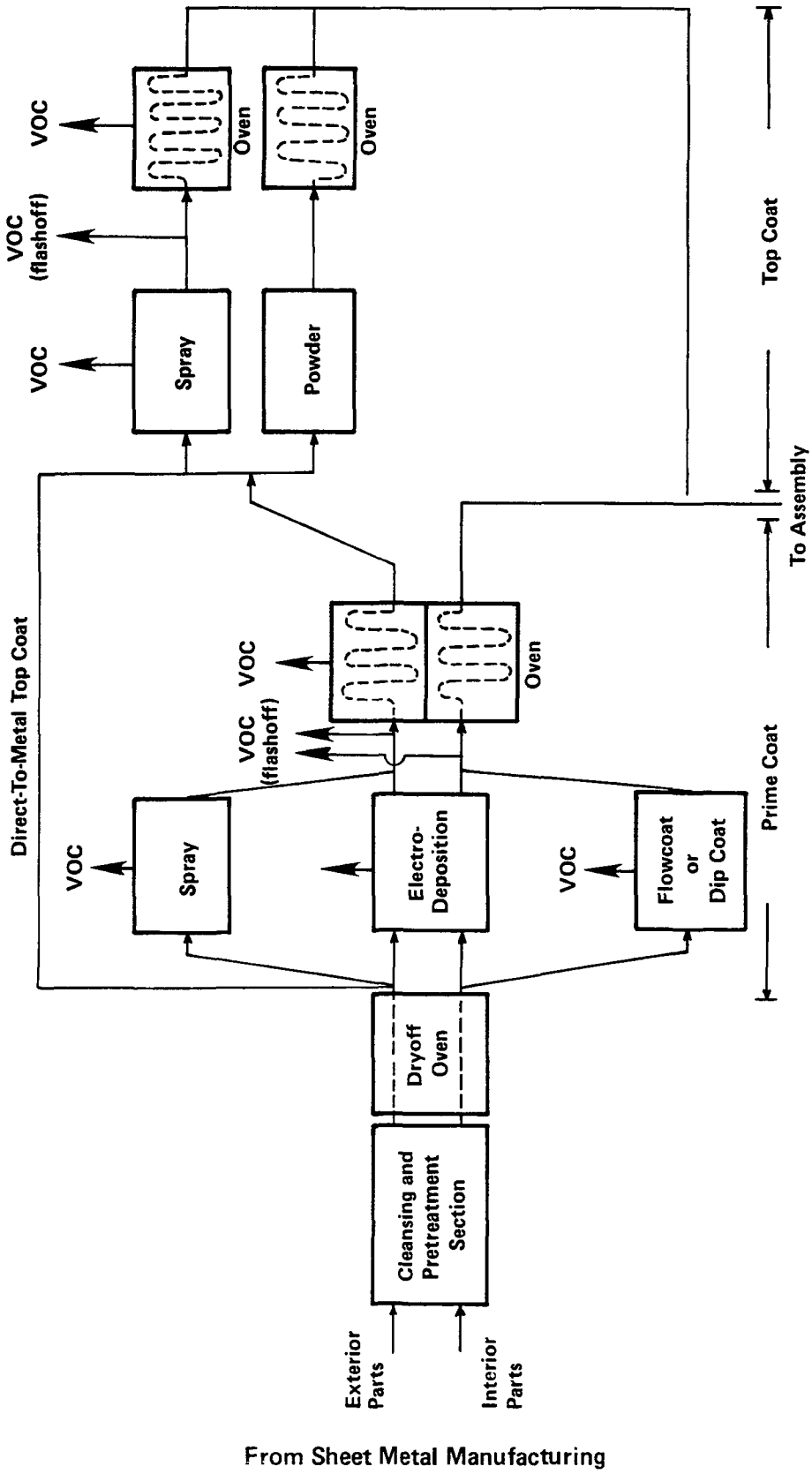

Figure 4.2.2.11-1. Typical coating application methods in the large appliance industry.

coatings for topcoats is gaining acceptance in the industry. These coatings, which are applied as a dry powder and then fused into a continuous coating film through the use of heat, yield negligible emissions.

4.2.2.11.2 Emissions And Controls[1-2]

Volatile organic compounds (VOC) are the major pollutants emitted from large appliance surface coating operations. VOC from evaporation of organic solvents contained in the coating are emitted in the application station, the flashoff area and the oven. An estimated 80 percent of total VOC emissions is given off in the application station and flashoff area. The remaining 20 percent occurs in the oven. Because the emissions are widely dispersed, the use of capture systems and control devices is not an economically attractive means of controlling emissions. While both incinerators and carbon adsorbers are technically feasible, none is known to be used in production, and none is expected. Improvements in coating formulation and application efficiency are the major means of reducing emissions.

Factors that affect the emission rate include the volume of coating used, the coating's solids content, the coating's VOC content, and the VOC density. The volume of coating used is a function of 3 additional variables: (1) the area coated, (2) the coating thickness, and (3) the application efficiency.

While a reduction in coating VOC content will reduce emissions, the transfer efficiency with which the coating is applied (i. e., the volume required to coat a given surface area) also has a direct bearing on the emissions. A transfer efficiency of 60 percent means that 60 percent of the coating solids consumed is deposited usefully onto appliance parts. The other 40 percent is wasted overspray. With a specified VOC content, an application system with a high transfer efficiency will have lower emission levels than will a system with a low transfer efficiency, because a smaller volume of coating will coat the same surface area. Since not every application method can be used with all parts and types of coating, transfer efficiencies in this industry range from 40 to over 95 percent.

Although waterborne prime coats are becoming common, the trend for topcoats appears to be toward use of "high solids" solventborne material, generally 60 volume percent or greater solids. As different types of coatings are required to meet different performance specifications, a combination of reduced coating VOC content and improved transfer efficiency is the most common means of emission reduction.

In the absence of control systems that remove or destroy a known fraction of the VOC prior to emission to the atmosphere, a material balance provides the quickest and most accurate emissions estimate. An equation to calculate emissions is presented below. To the extent that the parameters of this equation are known or can be determined, its use is encouraged. In the event that both a prime coat and a topcoat are used, the emissions from each must be calculated separately and added to estimate total emissions. Because of the diversity of product mix and plant sizes, it is difficult to provide emission factors for "typical" facilities. Approximate values for several of the variables in the equation are provided, however.

$$E = \frac{(6.234 \times 10^{-4})\ P\ A\ t\ V_o\ D_o}{V_s\ T} + L_d\ D_d$$

where:

E = mass of VOC emissions per unit time (lb/unit time)
P = units of production per unit time
A = area coated per unit of production (ft^2) (see Table 4.2.2.11-2)
t = dry coating thickness (mils) (see Table 4.2.2.11-2)
V_o = proportion of VOC in the coating (volume fraction), as received[a]
D_o = density of VOC solvent in the coating (lb/gal), as received[a]
V_s = proportion of solids in the coating (volume fraction), as received[a]
T = transfer efficiency (fraction: the ratio of coating solids deposited onto appliance parts to the total amount of coating solids used. See Table 4.2.2.11-1.)
L_d = volume of VOC solvent added to the coating per unit time (gal/unit time)
D_d = density of VOC solvent added (lb/gal)

The constant 6.234×10^{-4} is the product of 2 conversion factors:

$$\frac{8.333 \times 10^{-5}\ \text{ft}}{\text{mil}} \quad \text{and} \quad \frac{7.481\ \text{gal}}{\text{ft}^3}$$

If all the data are not available to complete the above equation, the following may be used as approximations:

V_o = 0.38
D_o = 7.36 lb/gal
V_s = 0.62
L_d = 0 (assumes no solvent added at the plant)

In the absence of all operating data, an emission estimate of 49.9 Mg (55 tons) of VOC per year may be used for the average appliance plant. Because of the large variation in emissions among plants (from less than 10 to more than 225 Mg [10 to 250 tons] per year), caution is advised when this estimate is used for anything except approximations for a large geographical area. Most of the known large appliance plants are in localities considered nonattainment areas for achieving the national ambient air quality standard (NAAQS) for ozone. The 49.9-Mg-per-year (55-ton-per-year) average is based on an emission limit of 2.8 lb of VOC per gallon of coating (minus water), which is the limit recommended by the Control Techniques Guideline (CTG) applicable in those areas. For a plant operating in an area where there are no emission limits, the emissions may be 4 times greater than from an identical plant subject to the CTG-recommended limit.

[a] If known, V_o, D_o, and V_s for the coating as applied (i. e., diluted) may be used in lieu of the values for the coating as received, and the term L_d D_d deleted.

Table 4.2.2.11-1. TRANSFER EFFICIENCIES

Application Method	Transfer Efficiency (T)
Air atomized spray	0.40
Airless spray	0.45
Manual electrostatic spray	0.60
Flow coat	0.85
Dip coat	0.85
Nonrotational automatic electrostatic spray	0.85
Rotating head automatic electrostatic spray	0.90
Electrodeposition	0.95
Powder	0.95

Table 4.2.2.11-2 (Metric And English Units). AREAS COATED AND COATING THICKNESS[a]

Appliance	Prime Coat		Topcoat	
	A (ft^2)	t (mils)	A (ft^2)	t (mils)
Compactor	20	0.5	20	0.8
Dishwasher	10	0.5	10	0.8
Dryer	90	0.6	30	1.2
Freezer	75	0.5	75	0.8
Microwave oven	8	0.5	8	0.8
Range	20	0.5	30	0.8
Refrigerator	75	0.5	75	0.8
Washing machine	70	0.6	25	1.2
Water heater	20	0.5	20	0.8

[a] A = area coated per unit of production. t = dry coating thickness.

References For Section 4.2.2.11

1. *Industrial Surface Coating: Appliances—Background Information For Proposed Standards*, EPA-450/3-80-037a, U. S. Environmental Protection Agency, Research Triangle Park, NC, November 1980.

2. *Industrial Surface Coating: Large Appliances—Background Information For Promulgated Standards*, EPA 450/3-80-037b, U. S. Environmental Protection Agency, Research Triangle Park, NC, 27711, October 1982.

4.2.2.12 Metal Furniture Surface Coating

4.2.2.12.1 General

The metal furniture surface coating process is a multistep operation consisting of surface cleaning, coatings application, and curing. Items such as desks, chairs, tables, cabinets, bookcases, and lockers are normally fabricated from raw material to finished product in the same facility. The industry uses primarily solventborne coatings, applied by spray, dip, or flow coating processes. Spray coating is the most common application technique used. The components of spray coating lines vary from plant to plant, but generally consist of the following:

3- to 5-stage washer
Dryoff oven
Spray booth
Flashoff area
Bake oven

Items to be coated are first cleaned in the washer to remove any grease, oil, or dirt from the surface. The washer generally consists of an alkaline cleaning solution, a phosphate treatment to improve surface adhesion characteristics, and a hot water rinse. The items are then dried in an oven and conveyed to the spray booth, where the surface coating is applied. After this application, the items are conveyed through the flashoff area to the bake oven, where the surface coating is cured. A diagram of these consecutive steps is presented in Figure 4.2.2.12-1. Although most metal furniture products receive only 1 coat of paint, some facilities apply a prime coat before the topcoat to improve the corrosion resistance of the product. In these cases, a separate spray booth and bake oven for application of the prime coat are added to the line, following the dryoff oven.

The coatings used in the industry are primarily solventborne resins, including acrylics, amines, vinyls, and cellulosics. Some metallic coatings are also used on office furniture. The solvents used are mixtures of aliphatics, xylene, toluene, and other aromatics. Typical coatings that have been used in the industry contain 65 volume percent solvent and 35 volume percent solids. Other types of coatings now being used in the industry are waterborne, powder, and solventborne high solids coatings.

4.2.2.12.2 Emissions And Controls

Volatile organic compounds (VOC) from the evaporation of organic solvents in the coatings are the major pollutants from metal furniture surface coating operations. Specific operations that emit VOC are the coating application process, the flashoff area and the bake oven. The percentage of total VOC emissions given off at each emission point varies from one installation to another, but on the average spray coating line, about 40 percent is given off at the application station, 30 percent in the flashoff area, and 30 percent in the bake oven.

Factors affecting the quantity of VOC emitted from metal furniture surface coating operations are the VOC content of the coatings applied, the solids content of coatings as applied, and the transfer efficiency. Knowledge of both the VOC content and solids content of coatings is necessary in cases where the coating contains other components, such as water.

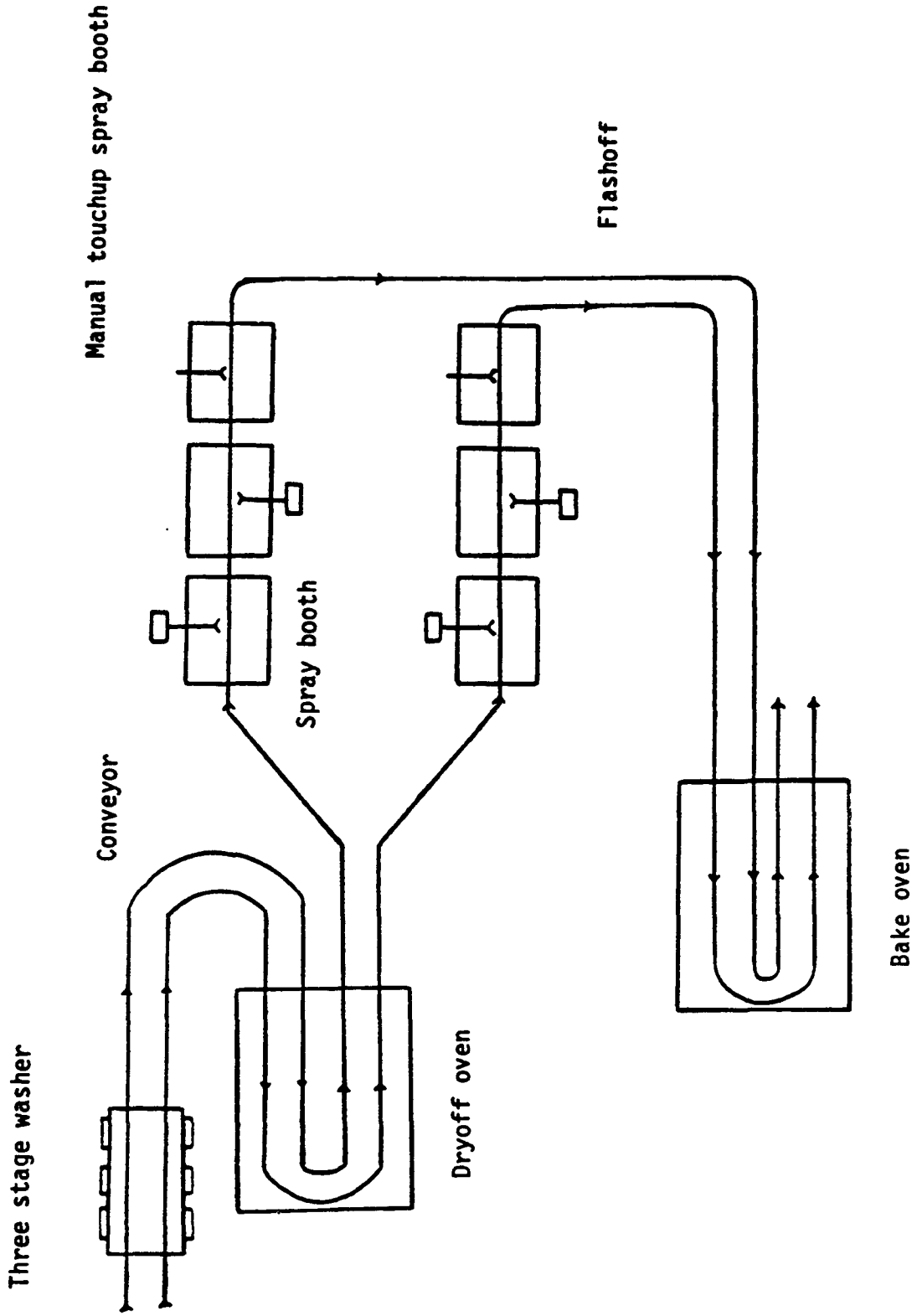

Figure 4.2.2.12-1. Example automated spray coating lines, with manual touchup.

The transfer efficiency (volume fraction of the solids in the total consumed coating that remains on the part) varies with the application technique. Transfer efficiency for standard (or ordinary) spraying ranges from 25 to 50 percent. The range for electrostatic spraying, a method that uses an electrical potential to increase transfer efficiency of the coating solids, is from 50 to 95 percent, depending on part size and shape. Powder coating systems normally capture and recirculate overspray material and, therefore, are considered in terms of a "utilization rate" rather than a transfer efficiency. Most facilities achieve a powder utilization rate of 90 to 95 percent.

Typical values for transfer efficiency with various application devices are in Table 4.2.2.12-1.

Table 4.2.2.12-1. COATING METHOD TRANSFER EFFICIENCIES

Application Methods	Transfer Efficiency (Te)
Air atomized spray	0.25
Airless spray	0.25
Manual electrostatic spray	0.60
Nonrotational automatic electrostatic spray	0.70
Rotating head electrostatic spray (manual and automatic)	0.80
Dip coat and flow coat	0.90
Electrodeposition	0.95

Two types of control techniques are available to reduce VOC emissions from metal furniture surface coating operations. The first technique makes use of control devices such as carbon absorbers and thermal or catalytic incinerators to recover or destroy VOC before it is discharged into the ambient air. These control methods are seldom used in the industry, however, because the large volume of exhaust air and low concentrations of VOC in the exhaust reduce their efficiency. The more prevalent control technique involves reducing the total amount of VOC likely to be evaporated and emitted. This is accomplished by use of low VOC content coatings and by improvements in transfer efficiency. New coatings with relatively low VOC levels can be used instead of the traditional high VOC content coatings. Examples of these new systems include waterborne coatings, powder coatings, and higher solids coatings. Improvements in coating transfer efficiency decrease the amount that must be used to achieve a given film thickness, thereby reducing emissions of VOC to the ambient air. By using a system with increased transfer efficiency (such as electrostatic spraying) and lower VOC content coatings, VOC emission reductions can approach those achieved with control devices.

The data presented in Tables 4.2.2.12-2 and 4.2.2.12-3 are representative of values which might be obtained from existing plants with similar operating characteristics. Each plant has its own combination of coating formulations, application equipment, and operating parameters. It is recommended that, whenever possible, plant-specific values be obtained for all variables when calculating emission estimates.

Table 4.2.2.12-2 (Metric Units). OPERATING PARAMETERS FOR COATING OPERATIONS

Plant Size	Operating Schedule (hr/yr)	Number Of Lines	Line Speed[a] (m/min)	Surface Area Coated/yr (m^2)	Liters Of Coating Used[b]
Small	2,000	1 (1 spray booth)	2.5	45,000	5,000
Medium	2,000	3 (3 booths/line	2.4	780,000	87,100
Large	2,000	10 (3 booths/line)	4.6	4,000,000	446,600

[a] Line speed is not used to calculate emissions, only to characterize plant operations.
[b] Using 35 volume % solids coating, applied by electrostatic spray at 65% transfer efficiency.

Table 4.2.2.12-3 (Metric Units). EMISSION FACTORS FOR VOC FROM SURFACE COATING OPERATIONS[a,b]

Plant Size And Control Techniques	VOC Emissions		
	kg/m^2 Coated	kg/yr	kg/hr
Small			
Uncontrolled emissions	0.064	2,875	1.44
65 Volume % high solids coating	0.019	835	0.42
Waterborne coating	0.012	520	0.26
Medium			
Uncontrolled emissions	0.064	49,815	24.90
65 Volume % high solids coating	0.019	14,445	7.22
Waterborne coating	0.012	8,970	4.48
Large			
Uncontrolled emissions	0.064	255,450	127.74
65 Volume % high solids coating	0.019	74,080	37.04
Waterborne coating	0.012	46,000	23.00

[a] Calculated using the parameters given in Table 4.2.2.12-2 and the following equation. Values have been rounded off.

$$E = \frac{0.0254\ ATVD}{S\ Te}$$

where:

E = Mass of VOC emitted per hour (kg)
A = Surface area coated per hour (m^2)
T = Dry film thickness of coating applied (mils)

Table 4.2.2.12-3 (cont.).

V = VOC content of coating, including dilution solvents added at the plant (fraction by volume)
D = VOC density (assumed to be 0.88 kg/L)
S = Solids content of coating (fraction by volume)
T_e = Transfer efficiency (fraction)

The constant 0.0254 converts the volume of dry film applied per m^2 to liters.

Example: The VOC emission from a medium size plant applying 35 volume % solids coatings and the parameters given in Table 4.2.2.12-3.

$$E_{\text{kilograms of VOC/hr}} = \frac{(0.0254)\ (390\ m^2/hr)\ (1\ mil)\ (0.65)\ (0.88\ kg/L)}{(0.35)\ (0.65)}$$

$$= 24.9 \text{ kilograms of VOC/hr}$$

[b] Nominal values of T, V, S, and Te:

T = 1 mil (for all cases)
V = 0.65 (uncontrolled), 0.35 (65 volume % solids), 0.117 (waterborne)
S = 0.35 (uncontrolled), 0.65 (65 volume % solids), 0.35 (waterborne)
Te = 0.65 (for all cases)

Another method that also may be used to estimate emissions for metal furniture coating operations involves a material balance approach. By assuming that all VOC in the coatings applied are evaporated at the plant site, an estimate of emissions can be calculated using only the coating formulation and data on the total quantity of coating used in a given time period. The percentage of VOC solvent in the coating, multiplied by the quantity of coating used yields the total emissions. This method of emissions estimation avoids the requirement to use variables such as coating thickness and transfer efficiency, which are often difficult to define precisely.

Reference For Section 4.2.2.12

1. *Surface Coating Of Metal Furniture—Background Information For Proposed Standards*, EPA-450/3-80-007a, U. S. Environmental Protection Agency, Research Triangle Park, NC, September 1980.

4.2.2.13 Magnetic Tape Manufacturing[1-9]

Magnetic tape manufacturing is a subcategory of industrial paper coating, which includes coating of foil and plastic film. In the manufacturing process, a mixture of magnetic particles, resins, and solvents is coated on a thin plastic film or "web". Magnetic tape is used largely for audio and video recording and computer information storage. Other uses include magnetic cards, credit cards, bank transfer ribbons, instrumentation tape, and dictation tape. The magnetic tape coating industry is included in two Standard Industrial Classification codes, 3573 (Electronic Computing Equipment) and 3679 (Electronic Components Not Elsewhere Classified).

4.2.2.13.1 Process Description[1-2]

The process of manufacturing magnetic tape consists of:

1. mixing the coating ingredients (including solvents)
2. conditioning the web
3. applying the coating to the web
4. orienting the magnetic particles
5. drying the coating in a drying oven
6. finishing the tape by calendering, rewinding, slitting, testing,and packaging

Figure 4.2.2.13-1 shows a typical magnetic tape coating operation, indicating volatile organic compound (VOC) emission points. Typical plants have from 5 to 12 horizontal or vertical solvent storage tanks, ranging in capacity from 3,800 to 75,700 liters (1,000 to 20,000 gallons), that are operated at or slightly above atmospheric pressure. Coating preparation equipment includes the mills, mixers, polishing tanks, and holding tanks used to prepare the magnetic coatings before application. Four types of coaters are used in producing magnetic tapes: extrusion (slot die), gravure, knife, and reverse roll (3- and 4-roll). The web may carry coating on 1 or both sides. Some products receive a nonmagnetic coating on the back. After coating, the web is guided through an orientation field, in which an electromagnet or permanent magnet aligns the individual magnetic particles in the intended direction. Webs from which flexible disks are to be produced do not go through the orientation process. The coated web then passes through a drying oven, where the solvents in the coating evaporate. Typically, air flotation ovens are used, in which the web is supported by jets of drying air. For safe operation, the concentration of solvent vapors is held between 10 and 40 percent of the lower explosive limit. The dry coated web may be passed through several calendering rolls to compact the coating and to smooth the surface finish. Nondestructive testing is performed on up to 100 percent of the final product, depending on the level of precision required of the final product. The web may then be slit into the desired tape widths. Flexible disks are punched from the finished web with a die. The final product is then packaged. Some plants ship the coated webs in bulk to other facilities for slitting and packaging.

High performance tapes require very clean production conditions, especially in the coating application and drying oven areas. Air supplied to these areas is conditioned to remove dust particles and to adjust the temperature and humidity. In some cases, "clean room" conditions are rigorously maintained.

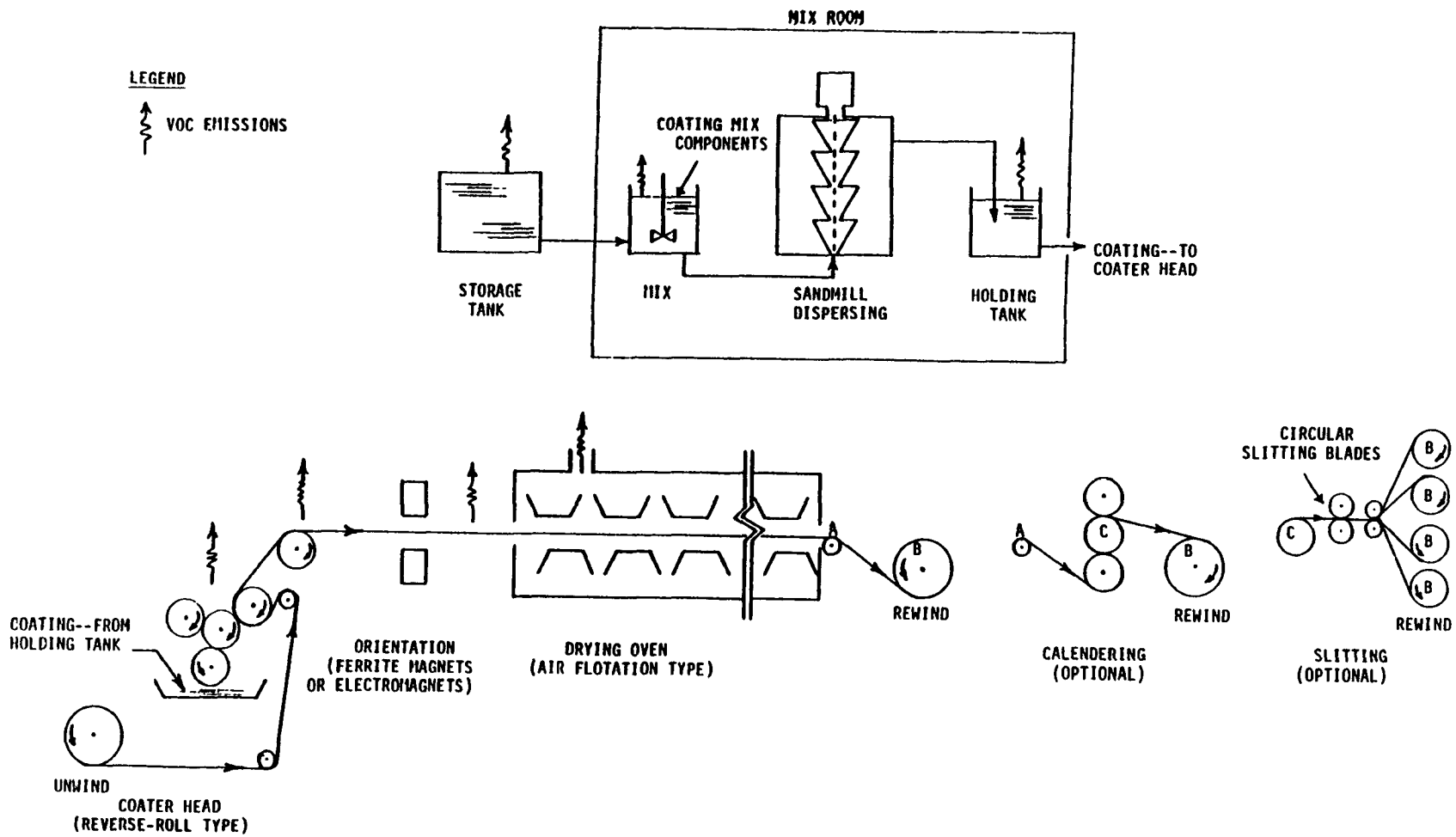

Figure 4.2.2.13-2. Schematic drawing of a magnetic tape coating plant.[1]

4.2.2.13.2 Emissions And Controls[1-8]

The significant VOC emission sources in a magnetic tape manufacturing plant include the coating preparation equipment, the coating application and flashoff area, and the drying ovens. Emissions from the solvent storage tanks and the cleanup area are generally only a negligible percentage of total emissions.

In the mixing or coating preparation area, VOCs are emitted from the individual pieces of equipment during the following operations: filling of mixers and tanks; transfer of the coating; intermittent activities, such as changing the filters in the holding tanks; and mixing (if mix equipment is not equipped with tightly fitting covers). Factors affecting emissions in the mixing areas include the capacity of the equipment, the number of pieces of equipment, solvent vapor pressure, throughput, and the design and performance of equipment covers. Emissions will be intermittent or continuous, depending on whether the preparation method is batch or continuous.

Emissions from the coating application area result from the evaporation of solvent during use of the coating application equipment and from the exposed web as it travels from the coater to the drying oven (flashoff). Factors affecting emissions are the solvent content of the coating, line width and speed, coating thickness, volatility of the solvent(s), temperature, distance between coater and oven, and air turbulence in the coating area.

Emissions from the drying oven are of the remaining solvent that is driven off in the oven. Uncontrolled emissions at this point are determined by the solvent content of the coating when it reaches the oven. Because the oven evaporates all the remaining solvent from the coating, there are no process VOC emissions after oven drying.

Solvent type and quantity are the common factors affecting emissions from all operations in a magnetic tape coating facility. The rate of evaporation or drying depends on solvent vapor pressure at a given temperature and concentration. The most commonly used organic solvents are toluene, methyl ethyl ketone (MEK), cyclohexanone, tetrahydrofuran, and methyl isobutyl ketone. Solvents are selected for their cost, solvency, availability, desired evaporation rate, ease of use after recovery, compatibility with solvent recovery equipment, and toxicity.

Of the total uncontrolled VOC emissions from the mixing area and coating operation (application/flashoff area and drying oven), approximately 10 percent is emitted from the mixing area, and 90 percent from the coating operation. Within the coating operation, approximately 10 percent occurs in the application/flashoff area, and 90 percent in the drying oven.

A control system for evaporative emissions consists of 2 components, a capture device and a control device. The efficiency of the control system is determined by the efficiencies of the 2 components.

A capture device is used to contain emissions from a process operation and direct them to a stack or to a control device. Room ventilation systems, covers, and hoods are possible capture devices from coating preparation equipment. Room ventilation systems, hoods, and partial and total enclosures are typical capture devices used in the coating application area. A drying oven can be considered a capture device, because it both contains and directs VOC process emissions. The efficiency of a capture device or a combination of capture devices is variable and depends on the quality of design and the levels of operation and maintenance.

A control device is any equipment that has as its primary function the reduction of emissions to the atmosphere. Control devices typically used in this industry are carbon adsorbers, condensers, and incinerators. Tightly fitting covers on coating preparation equipment may be considered both capture and control devices, because they can be used either to direct emissions to a desired point outside the equipment or to prevent potential emissions from escaping.

Carbon adsorption units use activated carbon to adsorb VOCs from a gas stream, after which the VOCs are desorbed and recovered from the carbon. Two types of carbon adsorbers are available, fixed-bed and fluidized-bed. Fixed-bed carbon adsorbers are designed with a steam-stripping technique to recover the VOCs and to regenerate the activated carbon. The fluidized-bed units used in this industry are designed to use nitrogen for VOC vapor recovery and carbon regeneration. Both types achieve typical VOC control efficiencies of 95 percent when properly designed, operated, and maintained.

Condensers control VOC emissions by cooling the solvent-laden gas to the dew point of the solvent(s) and then collecting the droplets. There are 2 condenser designs commercially available, nitrogen (inert gas) atmosphere and air atmosphere. These systems differ in the design and operation of the drying oven (i. e., use of nitrogen or air in the oven) and in the method of cooling the solvent-laden air (i. e., liquified nitrogen or refrigeration). Both design types can achieve VOC control efficiencies of 95 percent.

Incinerators control VOC emissions by oxidation of the organic compounds into carbon dioxide and water. Incinerators used to control VOC emissions may be of thermal or catalytic design and may use primary or secondary heat recovery to reduce fuel costs. Thermal incinerators operate at approximately 890°C (1600°F) to ensure oxidation of the organic compounds. Catalytic incinerators operate in the range of 400° to 540°C (750° to 1000°F) while using a catalyst to achieve comparable oxidation of VOCs. Both design types achieve a typical VOC control efficiency of 98 percent.

Tightly fitting covers control VOC emissions from coating preparation equipment by reducing evaporative losses. The parameters affecting the efficiency of these controls are solvent vapor pressure, cyclic temperature change, tank size, and product throughput. A good system of tightly fitting covers on coating preparation equipment reduces emissions by as much as 40 percent. Control efficiencies of 95 or 98 percent can be obtained by venting the covered equipment to an adsorber, condenser, or incinerator.

When the efficiencies of a capture device and control device are known, the efficiency of the control system can be computed by the following equation:

$$\text{capture efficiency} \times \text{control device efficiency} = \text{control system efficiency}$$

The terms of this equation are fractional efficiencies rather than percentages. For instance, a system of hoods delivering 60 percent of VOC emissions to a 90 percent efficient carbon adsorber would have a control system efficiency of 54 percent (0.60 x 0.90 = 0.54). Table 4.2.2.13-1 summarizes control system efficiencies, which may be used to estimate emissions in the absence of measured data on equipment and coating operations.

Table 4.2.2.13-1. TYPICAL OF CONTROL EFFICIENCIES[a]

Control Technology	Control Efficiency %[b]
Coating Preparation Equipment	
Uncontrolled	0
Tightly fitting covers	40
Sealed covers with carbon adsorber/condenser	95
Coating Operation[c]	
Local ventilation with carbon adsorber/condenser	83
Partial enclosure with carbon adsorber/condenser	87
Total enclosure with carbon adsorber/condenser	93
Total enclosure with incinerator	95

[a] Reference 1.
[b] To be applied to uncontrolled emissions from indicated process area, not from entire plant.
[c] Includes coating application/flashoff area and drying oven.

4.2.2.13.3 Emission Estimation Techniques[1,3-9]

In this industry, realistic emission estimates require solvent consumption data. The variations found in coating formulations, line speeds, and products mean that no reliable inferences can be made otherwise.

In uncontrolled plants and in those where VOCs are recovered for reuse or sale, plantwide emissions can be estimated by performing a liquid material balance based on the assumption that all solvent purchased replaces that which has been emitted. Any identifiable and quantifiable side streams should be subtracted from this total. The liquid material balance may be performed using the following general formula:

$$\text{solvent purchased} - \text{quantifiable solvent output} = \text{VOC emitted}$$

The first term encompasses all solvent purchased, including thinners, cleaning agents, and any solvent directly used in coating formulation. From this total, any quantifiable solvent outputs are subtracted. Outputs may include reclaimed solvent sold for use outside the plant or solvent contained in waste streams. Reclaimed solvent that is reused at the plant is not subtracted.

The advantages of this method are that it is based on data that are usually readily available, it reflects actual operations rather than theoretical steady state production and control conditions, and it includes emissions from all sources at the plant. Care should be taken not to apply this method over too short a time span. Solvent purchase, production, and waste removal occur in cycles that may not coincide exactly.

Occasionally, a liquid material balance may be possible on a scale smaller than the entire plant. Such an approach may be feasible for a single coating line or group of lines, if served by a dedicated mixing area and a dedicated control and recovery system. In this case, the computation begins with total solvent metered to the mixing area, instead of with solvent purchased. Reclaimed solvent is subtracted from this volume, whether or not it is reused on the site. Of course, other solvent input and output streams must be accounted for, as previously indicated. The difference

between total solvent input and total solvent output is then taken to be the quantity of VOCs emitted from the equipment in question.

Frequently, the configuration of meters, mixing areas, production equipment, and controls will make the liquid material balance approach impossible. In cases where control devices destroy potential emissions, or where a liquid material balance is inappropriate for other reasons, plantwide emissions can be estimated by summing the emissions calculated for specific areas of the plant. Techniques for these calculations are presented below.

Estimating VOC emissions from a coating operation (application/flashoff area and drying oven) starts with the assumption that the uncontrolled emission level is equal to the quantity of solvent contained in the coating applied. In other words, all the VOC in the coating evaporates by the end of the drying process.

Two factors are necessary to calculate the quantity of solvent applied: solvent content of the coating and the quantity of coating applied. Coating solvent content can be either directly measured using EPA Reference Method 24 or estimated using coating formulation data usually available from the plant owner/operator. The amount of coating applied may be directly metered. If it is not, it must be determined from production data. These data should be available from the plant owner/operator. Care should be taken in developing these 2 factors to ensure that they are in compatible units. In cases where plant-specific data cannot be obtained, the information in Table 4.2.2.13-2 may be useful in approximating the quantity of solvent applied.

When an estimate of uncontrolled emissions is obtained, the controlled emissions level is computed by applying a control system efficiency factor:

$$(\text{uncontrolled VOC}) \times (1 - \text{control system efficiency}) = (\text{VOC emitted})$$

As previously explained, the control system efficiency is the product of the efficiencies of the capture device and of the control device. If these values are not known, typical efficiencies for some combinations of capture and control devices are presented in Table 4.2.2.13-1. It is important to note that these control system efficiencies apply only to emissions that occur within the areas serviced by the systems. Emissions from sources such as process wastewater or discarded waste coatings may not be controlled at all.

In cases where emission estimates from the mixing area alone are desired, a slightly different approach is necessary. Here, uncontrolled emissions will consist of only that portion of total solvent that evaporates during the mixing process. A liquid material balance across the mixing area (i. e., solvent entering minus solvent content of coating applied) would provide a good estimate. In the absence of any measured value, it may be assumed, very approximately, that 10 percent of the total solvent entering the mixing area is emitted during the mixing process. When an estimate of uncontrolled mixing area emissions has been made, the controlled emission rate can be calculated as discussed previously. Table 4.2.2.13-1 lists typical overall control efficiencies for coating mix preparation equipment.

Solvent storage tanks of the size typically found in this industry are regulated by only a few states and localities. Tank emissions are generally small (130 kilograms [285 lb] per year or less). If an emissions estimate is desired, it can be computed using the equations, tables, and figures provided in Chapter 7.

Table 4.2.2.13-2 (Metric And English Units). SELECTED COATING MIX PROPERTIES[a]

Parameter	Unit	Range
Solids	weight % volume %	15 - 50 10 - 26
VOC	weight % volume %	50 - 85 74 - 90
Density of Coating	kg/L lb/gal	1.0 - 1.2 8 - 10
Density of Coating Solids	kg/L lb/gal	2.8 - 4.0 23 - 33
Resins/binder	weight % of solids	15 - 21
Magnetic particles	weight % of solids	66 - 78
Density of magnetic material	kg/L lb/gal	1.2 - 4.8 10 - 40
Viscosity	Pa•s $lb_f \cdot s/ft^2$	2.7 - 5.0 0.06 - 0.10
Coating thickness		
Wet	μm mil	3.8 - 54 0.15 - 2.1
Dry	μm mil	1.0 - 11 0.04 - 0.4

[a] Reference 9. To be used when plant-specific data are unavailable.

References For Section 4.2.2.13

1. *Magnetic Tape Manufacturing Industry—Background Information For Proposed Standards*, EPA-450/3-85-029a, U. S. Environmental Protection Agency, Research Triangle Park, NC, December 1985.

2. *Control Of Volatile Organic Emissions From Existing Stationary Sources—Volume II: Surface Coating Of Cans, Coils, Paper, Fabrics, Automobiles, And Light Duty Trucks*, EPA 450/2-77-008, U. S. Environmental Protection Agency, Research Triangle Park, NC, May 1977.

3. C. Beall, *"Distribution Of Emissions Between Coating Mix Preparation Area And The Coating Line"*, Memorandum file, Midwest Research Institute, Raleigh, NC, June 22, 1984.

4. C. Beall, *"Distribution Of Emissions Between Coating Application/Flashoff Area And Drying Oven"*, Memorandum to file, Midwest Research Institute, Raleigh, NC, June 22, 1984.

5. *Control Of Volatile Organic Emission From Existing Stationary Sources—Volume I: Control Methods For Surface-coating Operations*, EPA-450/2-76- 028, U. S. Environmental Protection Agency, Research Triangle Park, NC, November 1976.

6. G. Crane, *Carbon Adsorption For VOC Control*, U. S. Environmental Protection Agency, Research Triangle Park, NC, January 1982.

7. D. Mascone, *"Thermal Incinerator Performance For NSPS"*, Memorandum, Office Of Air Quality Planning And Standards, U. S. Environmental Protection Agency, Research Triangle Park, NC, June 11, 1980.

8. D. Mascone, "Thermal Incinerator Performance For NSPS, Addendum", Memorandum, Office Of Air Quality Planning And Standards, U. S. Environmental Protection Agency, Research Triangle Park, NC, June 22, 1980.

9. C. Beall, "Summary Of Nonconfidential Information On U.S. Magnetic Tape Coating Facilities", Memorandum, with attachment, to file, Midwest Research Institute, Raleigh, NC, June 22, 1984.

4.2.2.14 Surface Coating Of Plastic Parts For Business Machines

4.2.2.14.1 General[1-2]

Surface coating of plastic parts for business machines is defined as the process of applying coatings to plastic business machine parts to improve the appearance of the parts, to protect the parts from physical or chemical stress, and/or to attenuate electromagnetic interference/radio frequency interference (EMI/RFI) that would otherwise pass through plastic housings. Plastic parts for business machines are synthetic polymers formed into panels, housings, bases, covers, or other business machine components. The business machines category includes items such as typewriters, electronic computing devices, calculating and accounting machines, telephone and telegraph equipment, photocopiers, and miscellaneous office machines.

The process of applying an exterior coating to a plastic part can include surface preparation, spray coating, and curing, with each step possibly being repeated several times. Surface preparation may involve merely wiping off the surface, or it could involve sanding and puttying to smooth the surface. The plastic parts are placed on racks or trays, or are hung on racks or hooks from an overhead conveyor track for transport among spray booths, flashoff areas, and ovens. Coatings are sprayed onto parts in partially enclosed booths. An induced air flow is maintained through the booths to remove overspray and to keep solvent concentrations in the room air at safe levels. Although low-temperature bake ovens (60°C [140°F] or less) are often used to speed up the curing process, coatings also may be partially or completely cured at room temperature.

Dry filters or water curtains (in water wash spray booths) are used to remove overspray particles from the booth exhaust. In waterwash spray booths, most of the insoluble material is collected as sludge, but some of this material is dispersed in the water along with the soluble overspray components. Figure 4.2.2.14-1 depicts a typical dry filter spray booth, and Figure 4.2.2.14-2 depicts a typical water wash spray booth.

Many surface coating plants have only 1 manually operated spray gun per spray booth, and they interchange spray guns according to what type of coating is to be applied to the plastic parts. However, some larger surface coating plants operate several spray guns (manual or robotic) per spray booth, because coating a large volume of similar parts on conveyor coating lines makes production more efficient.

Spray coating systems commonly used in this industry fall into 3 categories, 3-coat, 2-coat, and single-coat. The 3-coat system is the most common, applying a prime coat, a color or base coat, and a texture coat. Typical dry film thickness for the 3-coat system ranges from 1 to 3 mils for the prime coat, 1 to 2 mils for the color coat, and 1 to 5 mils for the texture coat. Figure 4.2.2.14-3 depicts a typical conveyorized coating line using the 3-coat system. The conveyor line consists of 3 separate spray booths, each followed by a flashoff (or drying) area, all of which is followed by a curing oven. A 2-coat system applies a color or base coat, then a texture coat. Typical dry film thickness for the 2-coat system is 2 mils for the color (or base) coat, and 2 to 5 mils for the texture coat. The rarely used single-coat system applies only a thin color coat, either to protect the plastic substrate or to improve color matching between parts whose color and texture are molded in. Less coating solids are applied with the single-coat system than with the other systems. The dry film thickness applied for the single-coat system depends on the function of the coating. If protective properties are desired, the dry film thickness must be at least 1 mil (0.001 inches). For purposes of

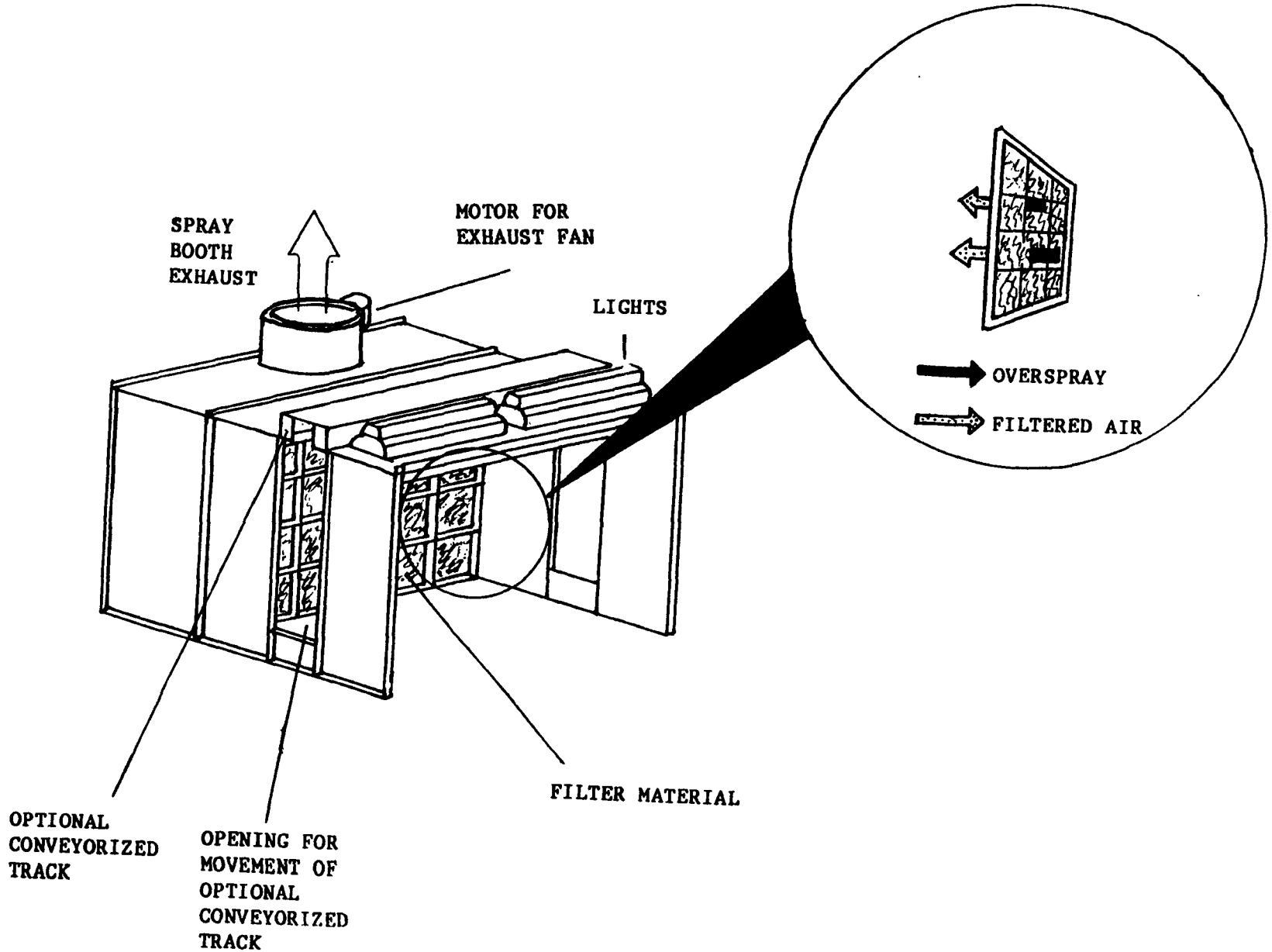

Figure 4.2.2.14-1. Typical dry filter spray booth. [3-4]

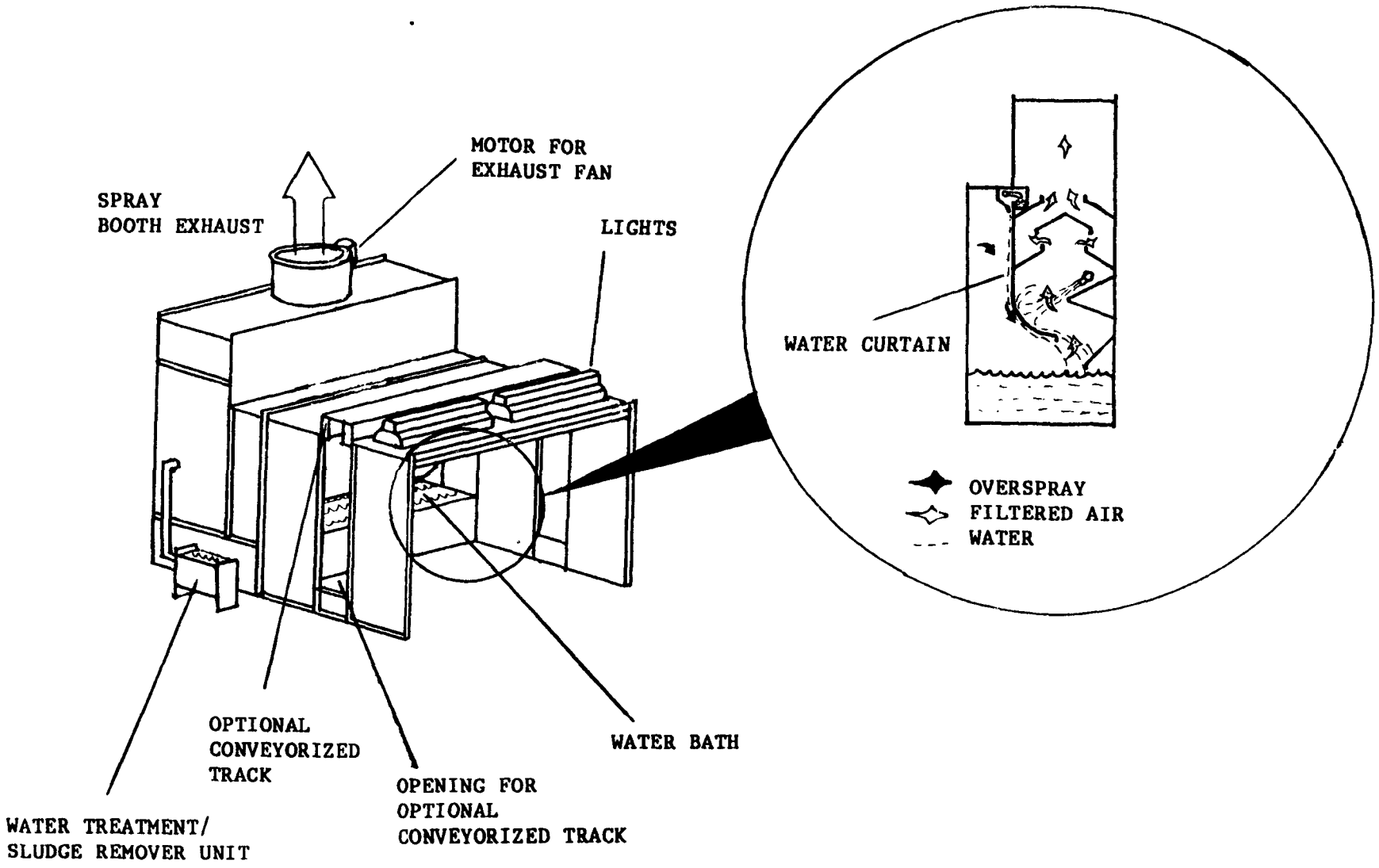

Figure 4.2.2.14-2. Typical water wash spray booth.[3]

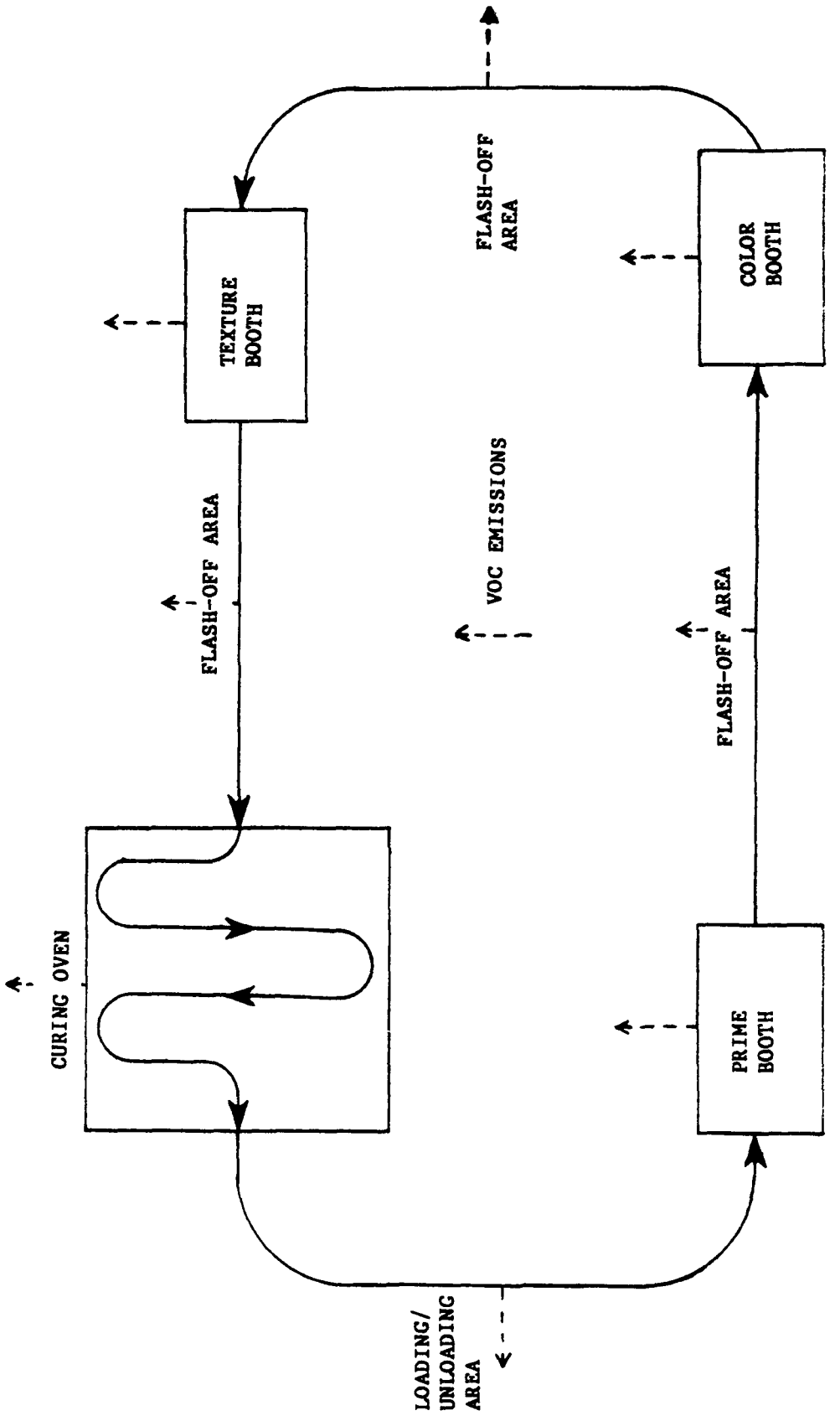

Figure 4.2.2.14-3. Typical conveyor line for 3-coat system.

color matching among parts having molded-in color and texture, a dry film thickness of 0.5 mils or less is needed to avoid masking the molded-in texture. The process of applying 0.5 mils of coating or less for color matching is commonly known as "fog coating", "mist coating", or "uniforming".

The 3 basic spray methods used in this industry to apply decorative/exterior coatings are air-atomized spray, air-assisted airless spray, and electrostatic air spray. Air-atomized spray is the most widely used coating technique for plastic business machine parts. Air-assisted airless spray is growing in popularity but is still not frequently found. Electrostatic air spray is rarely used, because plastic parts are not conductive. It has been used to coat parts that have been either treated with a conductive sensitizer or plated with a thin film of metal.

Air-atomized spray coating uses compressed air, which may be heated and filtered, to atomize the coating and to direct the spray. Air-atomized spray equipment is compatible with all coatings commonly found on plastic parts for business machines.

Air-assisted airless spray is a variation of airless spray, a spray technique used in other industries. In airless spray coating, the coating is atomized without air by forcing the liquid coating through specially designed nozzles, usually at pressures of 7 to 21 megapascals (MPa) (1,000 to 3,000 pounds per square inch [psi]). Air-assisted airless spray atomizes the coating by the same mechanism as airless spray, but at lower fluid pressures (under 7 MPa [1,000 psi]). After atomizing, air is then used to atomize the coating further and to help shape the spray pattern, reducing overspray to levels lower than those achieved with airless atomization alone. Figure 4.2.2.14-4 depicts a typical air-assisted airless spray gun. Air-assisted airless spray has been used to apply prime and color coats but not texture coats, because the larger size of the sprayed coating droplet (relative to that achieved by conventional air atomized spray) makes it difficult to achieve the desired surface finish quality for a texture coat. A touch-up coating step with air atomized equipment is sometimes necessary to apply color to recessed and louvered areas missed by air-assisted airless spray.

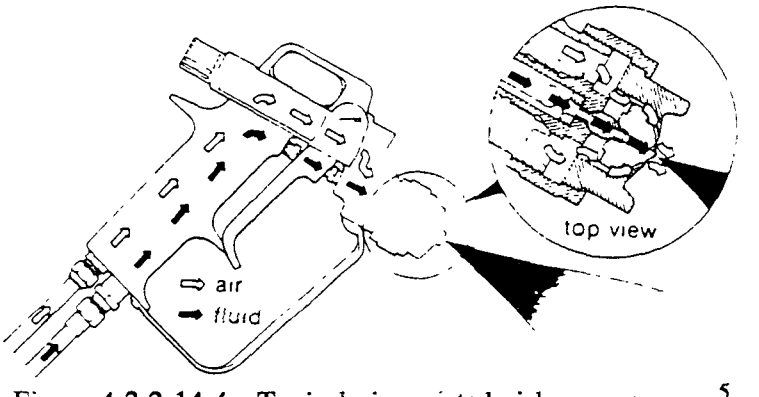

Figure 4.2.2.14-4. Typical air-assisted airless spray gun.[5]

In electrostatic air spray, the coating is usually charged electrically, and the parts being coated are grounded to create an electric potential between the coating and the parts. The atomized coating is attracted to the part by electrostatic force. Because plastic is an insulator, it is necessary to provide a conductive surface that can bleed off the electrical charge to maintain the ground potential of the part as the charged coating particles accumulate on the surfaces. Electrostatic air spray has been demonstrated for application of prime and color coats and has been used to apply texture coats, but this technique does not function well with the large-size particles generated for the texture coat, and it offers no substantial improvement over air-atomized spray for texture coating. A touch-up coating step with air-atomized spray is sometimes necessary to apply color and texture to recessed and louvered areas missed by electrostatic spray.

The coatings used for decorative/exterior coats are generally solvent-based and waterborne coatings. Solvents used include toluene, methyl ethyl ketone, methylene chloride, xylene, acetone, and isopropanol. Typically, organic solvent-based coatings used for decorative/exterior coats are 2 types of 2-component catalyzed urethanes. The solids contents of these coatings are from 30 to 35 volume percent (low solids) and 40 to 54 volume percent (medium solids) at the spray gun (i. e., at the point of application, or as applied). Waterborne decorative/exterior coatings typically contain no more than 37 volume percent solids at the gun. Other decorative/exterior coatings being used by the industry include solvent-based high solids coatings (i. e., equal to or greater than 60 volume percent solids) and 1-component low solids and medium solids coatings.

The application of an EMI/RFI shielding coat is done in a variety of ways. About 45 percent of EMI/RFI shielding applied to plastic parts is done by zinc-arc spraying, a process that does not emit volatile organic compounds (VOC). About 45 percent is done using organic solvent-based and waterborne metal-filled coatings, and the remaining EMI/RFI shielding is achieved by a variety of techniques involving electroless plating, and vacuum metallizing or sputtering (defined below), and use of conductive plastics, and metal inserts.

Zinc-arc spraying is a 2-step process in which the plastic surface (usually the interior of a housing) is first roughened by sanding or grit blasting and then sprayed with molten zinc. Grit blasting and zinc-arc spraying are performed in separate booths specifically equipped for those activities. Both the surface preparation and the zinc-arc spraying steps currently are performed manually, but robot systems have recently become available. Zinc-arc spraying requires a spray booth, a special spray gun, pressurized air, and zinc wire. The zinc-arc spray gun mechanically feeds 2 zinc wires into the tip of the spray gun, where they are melted by an electric arc. A high pressure air nozzle blows the molten zinc particles onto the surface of the plastic part. The coating thickness usually ranges from 1 to 4 mils, depending on product requirements.

Conductive coatings can be applied with most conventional spray equipment used to apply exterior coatings. Conductive coatings are usually applied manually with air spray guns, although air-assisted airless spray guns are sometimes used. Electrostatic spray methods cannot be used because of the high conductivity of EMI/RFI shielding coatings.

Organic solvent-based conductive coatings contain particles of nickel, silver, copper, or graphite, in either an acrylic or urethane resin. Nickel-filled acrylic coatings are the most frequently used, because of their shielding ability and their lower cost. Nickel-filled acrylics and urethanes contain from 15 to 25 volume percent solids at the gun. Waterborne nickel-filled acrylics with between 25 and 34 volume percent solids at the gun (approximately 50 to 60 volume percent solids, minus water) are less frequently used than are organic solvent-based conductive coatings.

The application of a conductive coating usually involves 3 steps: surface preparation, coating application, and curing. Although the first step can be eliminated if parts are kept free of mold-release agents and dirt, part surfaces are usually cleaned by wiping with organic solvents or detergent solutions and then roughened by light sanding. Coatings are usually applied to the interior surface of plastic housings, at a dry film thickness of 1 to 3 mils. Most conductive coatings can be cured at room temperature, but some must be baked in an oven.

Electroless plating is a dip process in which a film of metal is deposited in aqueous solution onto all exposed surfaces of the part. In the case of plastic business machine housings, both sides of a housing are coated. No VOC emissions are associated with the plating process itself. However, coatings applied before the plating step, so that only selected areas of the parts are plated, may emit VOCs. Waste water treatment may be necessary to treat the spent plating chemicals.

Vacuum metallizing and sputtering are similar techniques in which a thin film of metal (usually aluminum) is deposited from the vapor phase onto the plastic part. Although no VOC emissions occur during the actual metallizing process, prime coats often applied to ensure good adhesion and top coats to protect the metal film may both emit VOCs.

Conductive plastics are thermoplastic resins that contain conductive flakes or fibers of materials such as aluminum, steel, metallized glass, or carbon. Resin types currently available with conductive fillers include acrylonitrile butadiene styrene, acrylonitrile butadiene styrene/polycarbonate blends, polyphenylene oxide, nylon 6/6, polyvinyl chloride, and polybutyl terephthalate. The conductivity, and therefore the EMI/RFI shielding effectiveness, of these materials relies on contact or near-contact between the conductive particles within the resin matrix. Conductive plastic parts usually are formed by straight injection molding. Structural foam injection molding can reduce the EMI/RFI shield effectiveness of these materials because air pockets in the foam separate the conductive particles.

4.2.2.14.2 Emissions And Controls

The major pollutants from surface coating of plastic parts for business machines are VOC emissions from evaporation of organic solvents in the coatings used, and from reaction byproducts when the coatings cure. VOC sources include spray booth(s), flashoff area(s), and oven(s) or drying area(s). The relative contribution of each to total VOC emissions vary from plant to plant, but for an average coating operation, about 80 percent is emitted from the spray booth(s), 10 percent from the flashoff area(s), and 10 percent from the oven(s) or drying area(s).

Factors affecting the quantity of VOC emitted are the VOC content of the coatings applied, the solids content of coatings as applied, film build (thickness of the applied coating), and the transfer efficiency (TE) of the application equipment. To determine of VOC emissions when waterborne coatings are used, it is necessary to know the amounts of VOC, water, and solids in the coatings.

The TE is the fraction of the solids sprayed that remains on a part. TE varies with application technique and with type of coating applied. Table 4.2.2.14-1 presents typical TE values for various application methods.

Volatile organic compound emissions can be reduced by using low VOC content coatings (i. e., high solids or waterborne coatings), using surface finishing techniques that do not emit VOC, improving TE, and/or adding controls. Lower VOC content decorative/exterior coatings include high solids content (i. e., at least 60 volume percent solids at the spray gun), 2-component catalyzed urethane coatings, and waterborne coatings (i. e., 37 volume percent solids and 12.6 volume percent VOC at the spray gun). Both of these types of exterior/decorative coatings contain less VOC than conventional urethane coatings, which are typically 32 volume percent solids at the gun. Lower VOC content EMI/RFI shielding coatings include organic solvent-based acrylic or urethane conductive coatings containing at least 25 volume percent solids at the spray gun and waterborne conductive coatings containing 30 to 34 volume percent solids at the gun. Use of lower VOC content coatings reduces emissions of VOCs both by reducing the volume of coating needed to cover the part(s) and by reducing the amount of VOC in the coatings that are sprayed.

The major technique which provides an attractive exterior/decorative finish on plastic parts for business machines without emitting VOCs is the use of molded-in color and texture. VOC-free techniques for EMI/RFI shielding include zinc-arc spraying, electroless plating, the use of conductive plastics or metal inserts, and in some cases, vacuum metallizing and sputtering.

Table 4.2.2.14-1. TRANSFER EFFICIENCIES[a]

Application Methods	Transfer Efficiency (%)	Type Of Coating
Air-atomized spray	25	Prime, color, texture, touchup, and fog coats
Air-assisted airless spray	40	Prime, color coats
Electrostatic air spray	40	Prime, color coats

[a] As noted in the promulgated standards, values are presented solely to aid in determining compliance with the standards and may not reflect actual TE at a given plant. For this reason, table should be used with caution for estimating VOC emissions from any new facility. For a more exact estimate of emissions, the actual TE from specific coating operations at a given plant should be used. Reference 1.

Transfer efficiency can be improved by using air-assisted airless or electrostatic spray equipment, which are more efficient than the common application technique (air atomized). More efficient equipment can reduce VOC emissions by as much as 37 percent over conventional air atomized spray equipment, through reducing the amount of coating that must be sprayed to achieve a given film thickness.

Add-on controls applied to VOC emissions in other surface coating industries include thermal and catalytic incinerators, carbon adsorbers, and condensers. However, these control technologies have not been used in the surface coating of plastic parts because the large volume of exhaust air and the low concentrations of VOC in the exhaust reduce their efficiency.

The operating parameters in Tables 4.2.2.14-2 and 4.2.2.14-3 and the emissions factors in Tables 4.2.2.14-4 and 4.2.2.14-5 are representative of conditions at existing plants with similar operating characteristics. The 3 general sizes of surface coating plants presented in these tables (small, medium, and large) are given to assist in making a general estimate of VOC emissions. However, each plant has its own combination of coating formulations, application equipment, and operating parameters. Thus, it is recommended that, whenever possible, plant-specific values be obtained for all variables when calculating emission estimates.

A material balance may be used to provide a more accurate estimate of VOC emissions from the surface coating of plastic parts for business machines. An emissions estimate can be calculated using coating composition data (as determined by EPA Reference Method 24), and data on coating and solvent quantities used in a given time period by a surface coating operation. Using this approach, emissions are calculated as follows:

$$M_T = \sum_{i=1}^{n} L_{ci} D_{ci} W_{oi}$$

where:

M_T = total mass of VOC emitted (kg)
L_c = volume of each coating consumed, as sprayed (L)
D_c = density of each coating consumed, as sprayed (kg/L)
W_o = the proportion of VOC in each coating, as sprayed (including dilution solvent added at plant) (weight fraction)
n = number of coatings applied

Table 4.2.2.14-2 (Metric Units). REPRESENTATIVE PARAMETERS FOR SURFACE COATING OPERATIONS TO APPLY DECORATIVE/EXTERIOR COATINGS[a]

Plant Size	Operating Schedule (hr/yr)	Number Of Spray Booths		Surface Area Coated/yr (m^2 Of Plastic)	Coating Option/Control Techniques	Coating Sprayed (L/yr)
		Dry Filter	Water Wash			
Small	4,000	2	0	9,711	Baseline coating mix[b]	16,077[c]
					Low solids SB coating[d]	18,500[c]
					Medium solids SB coating[e]	11,840[c]
					High solids SB coating[f]	9,867[c]/6,167[g]
					WB coating[h]	16,000[c]
Medium	4,000	5[i]	0	77,743	Baseline coating mix[b]	128,704[c]
					Low solids SB coating[d]	148,100[c]
					Medium solids SB coating[e]	94,784[c]
					High solids SB coating[f]	78,987[c]/49,367[g]
					WB coating[h]	128,086[c]
Large	4,000	6[j]	3[k]	194,370	Baseline coating mix[b]	321,760[c]
					Low solids SB coating[d]	370,275[c]
					Medium solids SB coating[e]	236,976[c]
					High solids SB coating[f]	197,480[c]/123,425[g]
					WB coating[h]	320,238[c]

[a] Does not address EMI/RFI shielding coatings. SB = solventborne. WB = waterborne.
[b] Assumes baseline decorative/exterior coating consumption consists of a mix of coatings as follows:
64.8% = Solvent base 2-component catalyzed urethane containing 32 volume % solids at the gun.
23.5% = Solvent base two-component catalyzed urethane containing 50 volume % solids at the gun.
11.7% = Waterborne acrylic containing 37 volume % solids and 12.6 volume % organic solvent at the gun.
[c] Assumes 25% transfer efficiency (TE) based on the use of air-atomized spray equipment.
[d] Assumes use of a solvent base coating containing 32 volume % solids at the gun.
[e] Assumes use of a solvent base coating containing 50 volume % solids at the gun.
[f] Assumes the use of solvent base 2-component catalyzed urethane coating containing 60 volume % solids at the gun.
[g] Assumes 40% TE based on the use of air-assisted airless spray equipment, as required by new source performance standards.
[h] Assumes the use of a waterborne coating containing 37 volume % solids and 12.6 volume % organic solvent at the gun.
[i] Assumes 2 spray booths are for batch surface coating operations and remaining 3 booths are on a conveyor line.
[j] Assumes 2 spray booths are for batch surface coating operations and remaining 4 booths are on a conveyor line.
[k] Assumes that 3 spray booths are on a conveyor line.

Table 4.2.2.14-3 (Metric Units). REPRESENTATIVE PARAMETERS FOR SURFACE COATING OPERATIONS TO APPLY EMI/RFI SHIELDING COATINGS[a]

Plant Size	Operating Schedule (hr/yr)	Number Of Spray Booths		Surface Area Coated/yr (m^2 Of Plastic)	Coating Option/Control Technique	Coating Sprayed (L/yr)[b]
		Grit Blasting[a]	Zinc Arc Spray[a]			
Small	4,000	0	0	4,921	Low solids SB EMI/RFI shielding coating[c,d]	3,334
					Higher solids SB EMI/RFI shielding coating[d,e]	2,000
					WB EMI/RFI shielding coating[d,f]	1,515
					Zinc arc spray[g-i]	750
Medium	4,000	2	2	109,862	Low solids SB EMI/RFI shielding coating[c,d]	74,414
					Higher solids SB EMI/RFI shielding coating[d,e]	44,648
					WB EMI/RFI shielding coating[d,f]	33,824
					Zinc arc spray[g-i]	16,744
Large	4,000	4	4	239,239	Low solids SB EMI/RFI shielding coating[c,d]	162,040
					Higher solids SB EMI/RFI shielding coating[d,e]	97,224
					WB EMI/RFI shielding coating[d,f]	73,654
					Zinc arc spray[g-i]	34,460

[a] Includes sprayed conductive coatings using the dry filter and water wash spray booths listed in Table 4.2.2.14-2. SB = solventborne. WB = waterborne.
[b] Assumes 50% transfer efficiency (TE).
[c] Assumes use of solvent base EMI/RFI shielding coating containing 15 volume % solids at the gun.
[d] Applied at a 2 mil thickness (standard industry practice).
[e] Assumes use of a solvent base EMI/RFI shielding coating containing 25 volume % solids at the gun.
[f] Assumes use of a waterborne EMI/RFI shielding coating containing 33 volume % solids and 18.8 volume % organic solvent at the gun.
[g] Assumes use of zinc-arc spray shielding.
[h] Applied at a 3 mil thickness (standard industry practice).
[i] Based on amount of zinc wire sprayed per year (kg/yr) and zinc density of 6.32 g/mL.

Table 4.2.2.14-4 (Metric Units). EMISSION FACTORS FOR VOC FROM SURFACE COATING OPERATIONS TO APPLY DECORATIVE/EXTERIOR COATINGS[a,b]

Plant Configuration And Control Technique	kg/m^2 Coated	Volatile Organics	
		kg/yr	kg/hr
Small			
Baseline coating mix[c]	0.84	8,122	2.0
Low solids SB coating[d]	1.14	11,096	2.8
Medium solids SB coating[e]	0.54	5,221	1.3
High solids SB coating[f]	0.36 - 0.22	3,481 - 2,176	0.87 - 0.54
WB coating[g]	0.18	1,778	0.44
Medium			
Baseline coating mix[c]	0.84	64,986	16.2
Low solids SB coating[d]	1.14	88,825	22.2
Medium solids SB coating[e]	0.54	41,800	10.4
High solids SB coating[f]	0.36 - 0.22	27,867 - 17,417	7.0 - 4.4
WB coating[g]	0.18	14,234	3.6
Large			
Baseline coating mix[c]	0.84	162,463	40.6
Low solids SB coating[d]	1.14	222,076	55.5
Medium solids SB coating[e]	0.54	104,506	26.1
High solids SB coating[f]	0.36 - 0.22	69,671 - 43,544	17.4 - 10.9
WB coating[g]	0.18	35,589	8.9

[a] Assumes values given in Table 4.2.2.14-2, using the following equation: E = LDV
where:

E = VOC emission factors from surface coating operations (kg/yr)
L = Volume of coating sprayed (L)
D = Density coating sprayed (kg/L)
V = Volatile content of coating, including dilution solvents added at plant (weight fraction)

[b] Assumes all VOC present is emitted. Values have been rounded off. Does not address EMI/RFI shielding coatings. Assumes annual operating schedule of 4,000 hours. SB = solventborne. WB = waterborne.
[c] Based on use of the baseline coating mix in Table 4.2.2.14-2.
[d] Based on use of a solvent base coating containing 32 volume % solids at the gun.
[e] Based on use of a solvent base coating containing 50 volume % solids at the gun.
[f] Based on use of a solvent base coating containing 60 volume % solids at the gun.
[g] Based on use of a waterborne coating containing 37 volume % solids and 12.6 volume % organic solvent at the gun.

Table 4.2.2.14-5 (Metric Units). EMISSION FACTORS FOR VOC FROM SURFACE COATING OPERATIONS TO APPLY EMI/RFI SHIELDING COATINGS[a,b]

Plant Configuration And Control Technique	kg/m^2 Coated	Volatile Organics	
		kg/yr	kg/hr
Small			
Low solids SB EMI/RFI shielding coating[c]	0.51	2,500	0.62
Higher solids SB EMI/RFI shielding coating[d]	0.27	1,323	0.33
WB EMI/RFI shielding coating[e]	0.05	251	0.063
Zinc-arc spray[f]	0	0	0
Medium			
Low solids SB EMI/RFI shielding coating[c]	0.51	55,787	13.9
Higher solids SB EMI/RFI shielding coating[d]	0.27	29,535	7.4
WB EMI/RFI shielding coating[e]	0.05	5,609	1.4
Zinc-arc spray[f]	0	0	0
Large			
Low solids SB EMI/RFI shielding coating[c]	0.51	121,484	30.4
Higher solids SB EMI/RFI shielding coating[d]	0.27	64,314	16.1
WB EMI/RFI shielding coating[e]	0.05	12,214	3.1
Zinc-arc spray[f]	0	0	0

[a] Assumes values given in Table 4.2.2.14-3, using the following equation: E = LDV
where:

E = VOC emission factors from surface coating operations (kg/yr)
L = Volume of coating sprayed (L)
D = Density coating sprayed (kg/L)
V = Volatile content of coating, including dilution solvents added at plant (fraction by weight)

[b] Assumes all VOC present is emitted. Values have been rounded off. Does not address EMI/RFI shielding coatings. Assumes annual operating schedule of 4,000 hours. SB = solventborne. WB = waterborne.

[c] Assumes use of solvent base EMI/RFI shielding coating containing 15 volume % solids at the gun.

[d] Assumes use of a solvent base EMI/RFI shielding coating containing 25 volume % solids at the gun.

[e] Assumes use of a waterborne EMI/RFI shielding coating containing 33 volume % solids and 18.8 volume % organic solvent at the gun.

[f] Assumes use of a zinc-arc spray shielding.

References For Section 4.2.2.14

1. *Surface Coating Of Plastic Parts For Business Machines—Background Information For Proposed Standards*, EPA-450/3-85-019a, U. S. Environmental Protection Agency, Research Triangle Park, NC, December 1985.

2. Written communication from Midwest Research Institute, Raleigh, NC, to David Salman, U. S. Environmental Protection Agency, Research Triangle Park, NC, June 19, 1985.

3. Protectaire® Spray Booths, Protectaire Systems Company, Elgin, IL, 1982.

4. Binks® Spray Booths And Related Equipment, Catalog SB-7, Binks Manufacturing Company, Franklin Park, IL, 1982.

5. Product Literature On Wagner® Air Coat® Spray Gun, Wagner Spray Technology, Minneapolis, MN, 1982.

4.3 Waste Water Collection, Treatment And Storage

4.3.1 General

Many different industries generate waste water streams that contain organic compounds. Nearly all of these streams undergo collection, contaminant treatment, and/or storage operations before they are finally discharged into either a receiving body of water or a municipal treatment plant for further treatment. During some of these operations, the waste water is open to the atmosphere, and volatile organic compounds (VOC) may be emitted from the waste water into the air.

Industrial waste water operations can range from pretreatment to full-scale treatment processes. In a typical pretreatment facility, process and/or sanitary waste water and/or storm water runoff is collected, equalized, and/or neutralized and then discharged to a municipal waste water plant, also known as a publicly owned treatment works (POTWs), where it is then typically treated further by biodegradation.

In a full-scale treatment operation, the waste water must meet Federal and/or state quality standards before it is finally discharged into a receiving body of water. Figure 4.3-1 shows a generic example of collection, equalization, neutralization, and biotreatment of process waste water in a full-scale industrial treatment facility. If required, chlorine is added as a disinfectant. A storage basin contains the treated water until the winter months (usually January to May), when the facility is allowed to discharge to the receiving body of water. In the illustration, the receiving body of water is a slow-flowing stream. The facility is allowed to discharge in the rainy season when the facility waste water is diluted.

Figure 4.3-1 also presents a typical treatment system at a POTW waste water facility. Industrial waste water sent to POTWs may be treated or untreated. POTWs may also treat waste water from residential, institutional, and commercial facilities; from infiltration (water that enters the sewer system from the ground); and/or storm water runoff. These types of waste water generally do not contain VOCs. A POTW usually consists of a collection system, primary settling, biotreatment, secondary settling, and disinfection.

Collection, treatment, and storage systems are facility-specific. All facilities have some type of collection system, but the complexity will depend on the number and volume of waste water streams generated. As mentioned above, treatment and/or storage operations also vary in size and degree of treatment. The size and degree of treatment of waste water streams will depend on the volume and degree of contamination of the waste water and on the extent of contaminant removal desired.

4.3.1.1 Collection Systems -

There are many types of waste water collection systems. In general, a collection system is located at or near the point of waste water generation and is designed to receive 1 or more waste water streams and then to direct these streams to treatment and/or storage systems.

A typical industrial collection system may include drains, manholes, trenches, junction boxes, sumps, lift stations, and/or weirs. Waste water streams from different points throughout the industrial facility normally enter the collection system through individual drains or trenches connected to a main sewer line. The drains and trenches are usually open to the atmosphere. Junction boxes, sumps,

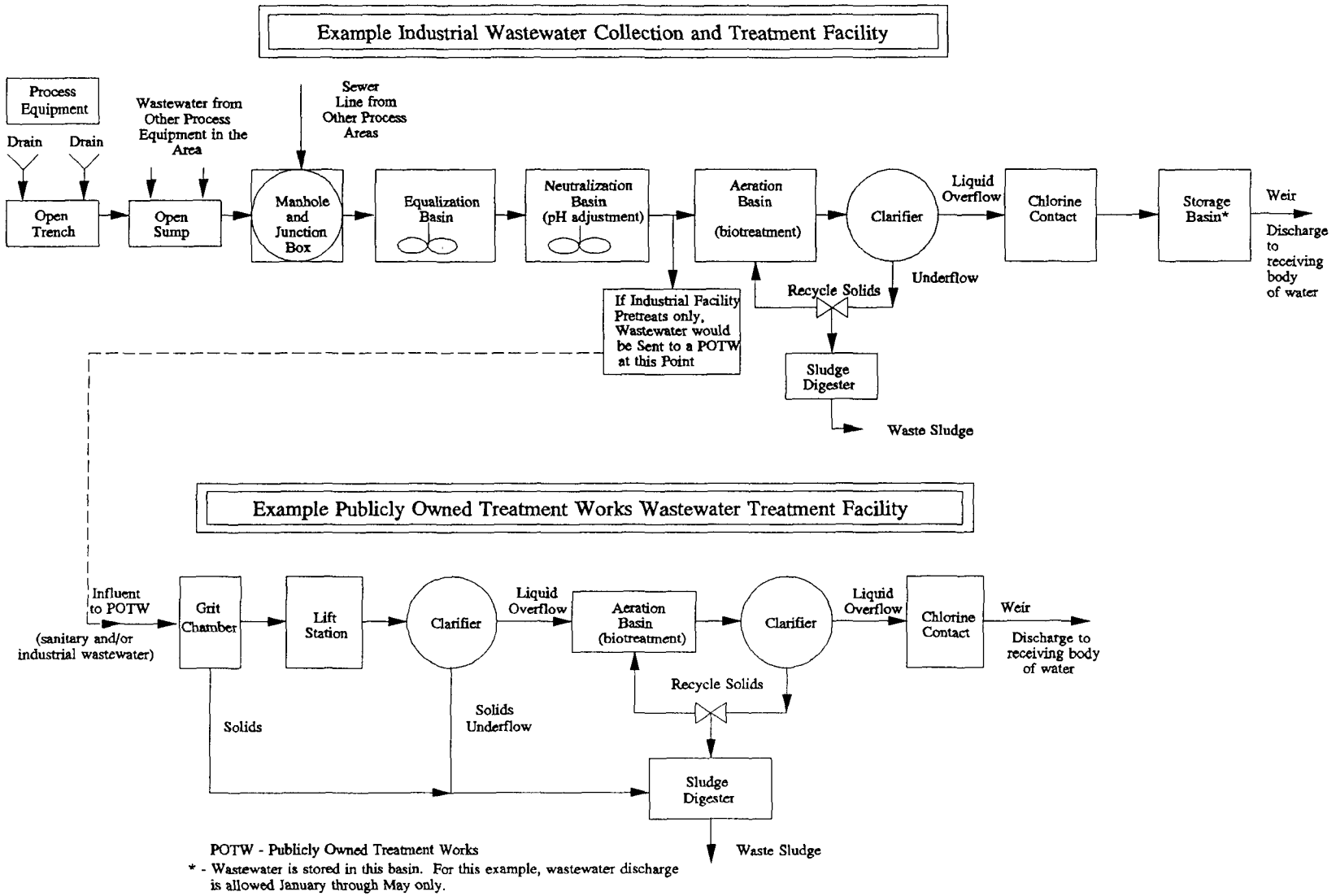

Figure 4.3.1. Typical waste water collection and treatment systems for industrial and municipal facilities.

trenches, lift stations, and weirs will be located at points requiring waste water transport from 1 area or treatment process to another.

A typical POTW facility collection system will contain a lift station, trenches, junction boxes, and manholes. Waste water is received into the POTW collection system through open sewer lines from all sources of influent waste water. As mentioned previously, these sources may convey sanitary, pretreated or untreated industrial, and/or storm water runoff waste water.

The following paragraphs briefly describe some of the most common types of waste water collection system components found in industrial and POTW facilities. Because the arrangement of collection system components is facility-specific, the order in which the collection system descriptions are presented is somewhat arbitrary.

Waste water streams normally are introduced into the collection system through individual or area drains, which can be open to the atmosphere or sealed to prevent waste water contact with the atmosphere. In industry, individual drains may be dedicated to a single source or piece of equipment. Area drains will serve several sources and are located centrally among the sources or pieces of equipment that they serve.

Manholes into sewer lines permit service, inspection, and cleaning of a line. They may be located where sewer lines intersect or where there is a significant change in direction, grade, or sewer line diameter.

Trenches can be used to transport industrial waste water from point of generation to collection units such as junction boxes and lift station, from 1 process area of an industrial facility to another, or from 1 treatment unit to another. POTWs also use trenches to transport waste water from 1 treatment unit to another. Trenches are likely to be either open or covered with a safety grating.

Junction boxes typically serve several process sewer lines, which meet at the junction box to combine multiple waste water streams into 1. Junction boxes normally are sized to suit the total flow rate of the entering streams.

Sumps are used typically for collection and equalization of waste water flow from trenches or sewer lines before treatment or storage. They are usually quiescent and open to the atmosphere.

Lift stations are usually the last collection unit before the treatment system, accepting waste water from 1 or several sewer lines. Their main function is to lift the collected waste water to a treatment and/or storage system, usually by pumping or by use of a hydraulic lift, such as a screw.

Weirs can act as open channel dams, or they can be used to discharge cleaner effluent from a settling basin, such as a clarifier. When used as a dam, the weir's face is normally aligned perpendicular to the bed and walls of the channel. Water from the channel usually flows over the weir and falls to the receiving body of water. In some cases, the water may pass through a notch or opening in the weir face. With this type of weir, flow rate through the channel can be measured. Weir height, generally the distance the water falls, is usually no more than 2 meters (6 feet). A typical clarifier weir is designed to allow settled waste water to overflow to the next treatment process. The weir is generally placed around the perimeter of the settling basin, but it can also be towards the middle. Clarifier weir height is usually only about 0.1 meters (4 inches).

4.3.1.2 Treatment And/Or Storage Systems -

These systems are designed to hold liquid wastes or waste water for treatment, storage, or disposal. They are usually composed of various types of earthen and/or concrete-lined basins, known as surface impoundments. Storage systems are used typically for accumulating waste water before its ultimate disposal, or for temporarily holding batch (intermittent) streams before treatment.

Treatment systems are divided into 3 categories: primary, secondary, or tertiary, depending on their design, operation, and application. In primary treatment systems, physical operations remove floatable and settleable solids. In secondary treatment systems, biological and chemical processes remove most of the organic matter in the waste water. In tertiary treatment systems, additional processes remove constituents not taken out by secondary treatment.

Examples of primary treatment include oil/water separators, primary clarification, equalization basins, and primary treatment tanks. The first process in an industrial waste water treatment plant is often the removal of heavier solids and lighter oils by means of oil/water separators. Oils are usually removed continuously with a skimming device, while solids can be removed with a sludge removal system.

In primary treatment, clarifiers are usually located near the beginning of the treatment process and are used to settle and remove settleable or suspended solids contained in the influent waste water. Figure 4.3-2 presents an example design of a clarifier. Clarifiers are generally cylindrical and are sized according to both the settling rate of the suspended solids and the thickening characteristics of the sludge. Floating scum is generally skimmed continuously from the top of the clarifier, while sludge is typically removed continuously from the bottom of the clarifier.

Equalization basins are used to reduce fluctuations in the waste water flow rate and organic content before the waste is sent to downstream treatment processes. Flow rate equalization results in a more uniform effluent quality in downstream settling units such as clarifiers. Biological treatment performance can also benefit from the damping of concentration and flow fluctuations, protecting biological processes from upset or failure from shock loadings of toxic or treatment-inhibiting compounds.

In primary treatment, tanks are generally used to alter the chemical or physical properties of the waste water by, for example, neutralization and the addition and dispersion of chemical nutrients. Neutralization can control the pH of the waste water by adding an acid or a base. It usually precedes biotreatment, so that the system is not upset by high or low pH values. Similarly, chemical nutrient addition/dispersion precedes biotreatment, to ensure that the biological organisms have sufficient nutrients.

An example of a secondary treatment process is biodegradation. Biological waste treatment usually is accomplished by aeration in basins with mechanical surface aerators or with a diffused air system. Mechanical surface aerators float on the water surface and rapidly mix the water. Aeration of the water is accomplished through splashing. Diffused air systems, on the other hand, aerate the water by bubbling oxygen through the water from the bottom of the tank or device. Figure 4.3-3 presents an example design of a mechanically aerated biological treatment basin. This type of basin is usually an earthen or concrete-lined pond and is used to treat large flow rates of waste water. Waste waters with high pollutant concentrations, and in particular high-flow sanitary waste waters, are typically treated using an activated sludge system where biotreatment is followed by secondary clarification. In this system, settled solids containing biomass are recycled from clarifier sludge to the biotreatment system. This creates a high biomass concentration and therefore allows biodegradation to occur over a shorter residence time. An example of a tertiary treatment process is nutrient

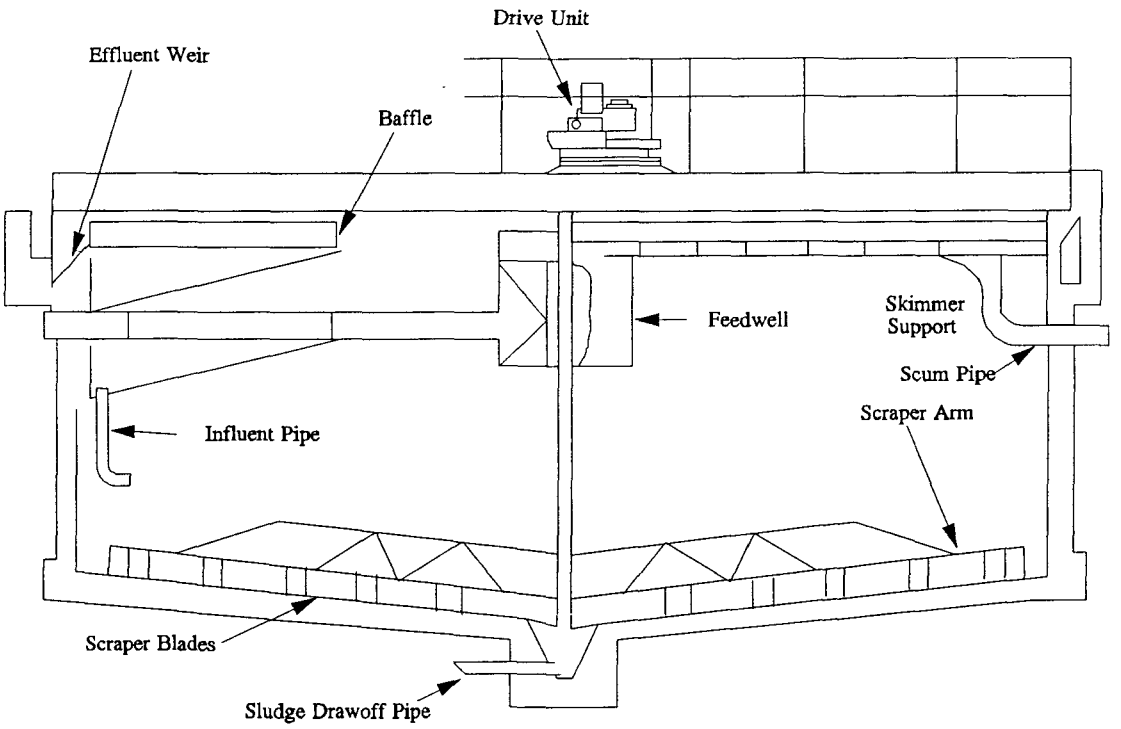

Figure 4.3-2. Example clarifier configuration.

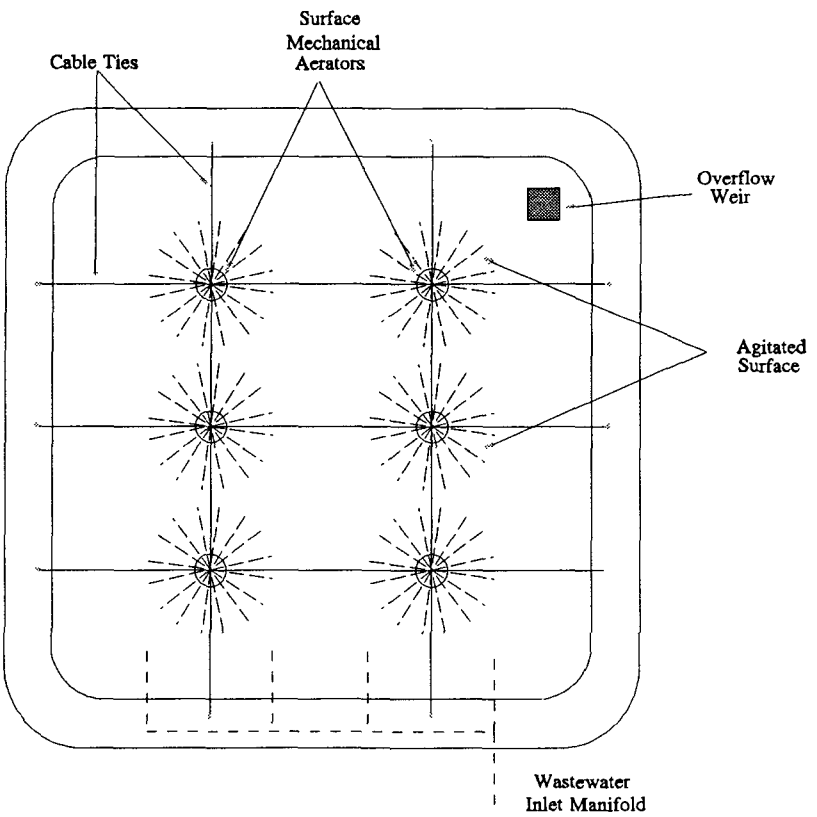

Figure 4.3-3. Example aerated biological treatment basin.

removal. Nitrogen and phosphorus are removed after biodegradation as a final treatment step before waste water is discharged to a receiving body of water.

4.3.1.3 Applications -

As previously mentioned, waste water collection, treatment, and storage are common in many industrial categories and in POTW. Most industrial facilities and POTW collect, contain, and treat waste water. However, some industries do not treat their waste water, but use storage systems for temporary waste water storage or for accumulation of waste water for ultimate disposal. For example, the Agricultural Industry does little waste water treatment but needs waste water storage systems, while the Oil and Gas Industry also has a need for waste water disposal systems.

The following are waste water treatment and storage applications identified by type of industry:

1. Mining And Milling Operations - Storage of various waste waters such as acid mine water, solvent wastes from solution mining, and leachate from disposed mining wastes. Treatment operations include settling, separation, washing, sorting of mineral products from tailings, and recovery of valuable minerals by precipitation.

2. Oil And Gas Industry - One of the largest sources of waste water. Operations treat brine produced during oil extraction and deep-well pressurizing operations, oil-water mixtures, gaseous fluids to be separated or stored during emergency conditions, and drill cuttings and drilling muds.

3. Textile And Leather Industry - Treatment and sludge disposal. Organic species treated or disposed of include dye carriers such as halogenated hydrocarbons and phenols. Heavy metals treated or disposed of include chromium, zinc, and copper. Tanning and finishing wastes may contain sulfides and nitrogenous compounds.

4. Chemical And Allied Products Industry - Process waste water treatment and storage, and sludge disposal. Waste constituents are process-specific and include organics and organic phosphates, fluoride, nitrogen compounds, and assorted trace metals.

5. Other Industries - Treatment and storage operations are found at petroleum refining, primary metals production, wood treating, and metal finishing facilities. Various industries store and/or treat air pollution scrubber sludge and dredging spoils sludge (i. e., settled solids removed from the floor of a surface impoundment).

4.3.2 Emissions

VOCs are emitted from waste water collection, treatment, and storage systems through volatilization of organic compounds at the liquid surface. Emissions can occur by diffusive or convective mechanisms, or both. Diffusion occurs when organic concentrations at the water surface are much higher than ambient concentrations. The organics volatilize, or diffuse into the air, in an attempt to reach equilibrium between aqueous and vapor phases. Convection occurs when air flows over the water surface, sweeping organic vapors from the water surface into the air. The rate of volatilization relates directly to the speed of the air flow over the water surface.

Other factors that can affect the rate of volatilization include waste water surface area, temperature, and turbulence; waste water retention time in the system(s); the depth of the waste water in the system(s); the concentration of organic compounds in the waste water and their physical

properties, such as volatility and diffusivity in water; the presence of a mechanism that inhibits volatilization, such as an oil film; or a competing mechanism, such as biodegradation.

The rate of volatilization can be determined by using mass transfer theory. Individual gas phase and liquid phase mass transfer coefficients (k_g and k_ℓ, respectively) are used to estimate overall mass transfer coefficients (K, K_{oil}, and K_D) for each VOC.[1-2] Figure 4.3-4 presents a flow diagram to assist in determining the appropriate emissions model for estimating VOC emissions from various types of waste water treatment, storage, and collection systems. Tables 4.3-1 and 4.3-2, respectively, present the emission model equations and definitions.

VOCs vary in their degree of volatility. The emission models presented in this section can be used for high-, medium-, and low-volatility organic compounds. The Henry's law constant (HLC) is often used as a measure of a compound's volatility, or the diffusion of organics into the air relative to diffusion through liquids. High-volatility VOCs are HLC > 10^{-3} atm-m^3/gmol; medium-volatility VOCs are 10^{-3} < HLC < 10^{-5} atm-m^3/gmol; and low-volatility VOCs are HLC < 10^{-5} atm-m^3/ gmol.[1]

The design and arrangement of collection, treatment, and storage systems are facility-specific; therefore the most accurate waste water emissions estimate will come from actual tests of a facility (i. e., tracer studies or direct measurement of emissions from openings). If actual data are unavailable, the emission models provided in this section can be used.

Emission models should be given site-specific information whenever it is available. The most extensive characterization of an actual system will produce the most accurate estimates from an emissions model. In addition, when addressing systems involving biodegradation, the accuracy of the predicted rate of biodegradation is improved when site-specific compound biorates are input. Reference 3 contains information on a test method for measuring site-specific biorates, and Table 4.3-4 presents estimated biorates for approximately 150 compounds.

To estimate an emissions rate (N), the first step is to calculate individual gas phase and liquid phase mass transfer coefficients k_g and k_ℓ. These individual coefficients are then used to calculate the overall mass transfer coefficient, K. Exceptions to this procedure are the calculation of overall mass transfer coefficients in the oil phase, K_{oil}, and the overall mass transfer coefficient for a weir, K_D. K_{oil} requires only k_g, and K_D does not require any individual mass transfer coefficients. The overall mass transfer coefficient is then used to calculate the emissions rates. The following discussion describes how to use Figure 4.3-4 to determine an emission rate. An example calculation is presented in Part 4.3.2.1 below.

Figure 4.3-4 is divided into 2 sections: waste water treatment and storage systems, and waste water collection systems. Waste water treatment and storage systems are further segmented into aerated/nonaerated systems, biologically active systems, oil film layer systems, and surface impoundment flowthrough or disposal. In flowthrough systems, waste water is treated and discharged to a POTW or a receiving body of water, such as a river or stream. All waste water collection systems are by definition flowthrough. Disposal systems, on the other hand, do not discharge any waste water.

Figure 4.3-4 includes information needed to estimate air emissions from junction boxes, lift stations, sumps, weirs, and clarifier weirs. Sumps are considered quiescent, but junction boxes, lift stations, and weirs are turbulent in nature. Junction boxes and lift stations are turbulent because incoming flow is normally above the water level in the component, which creates some splashing.

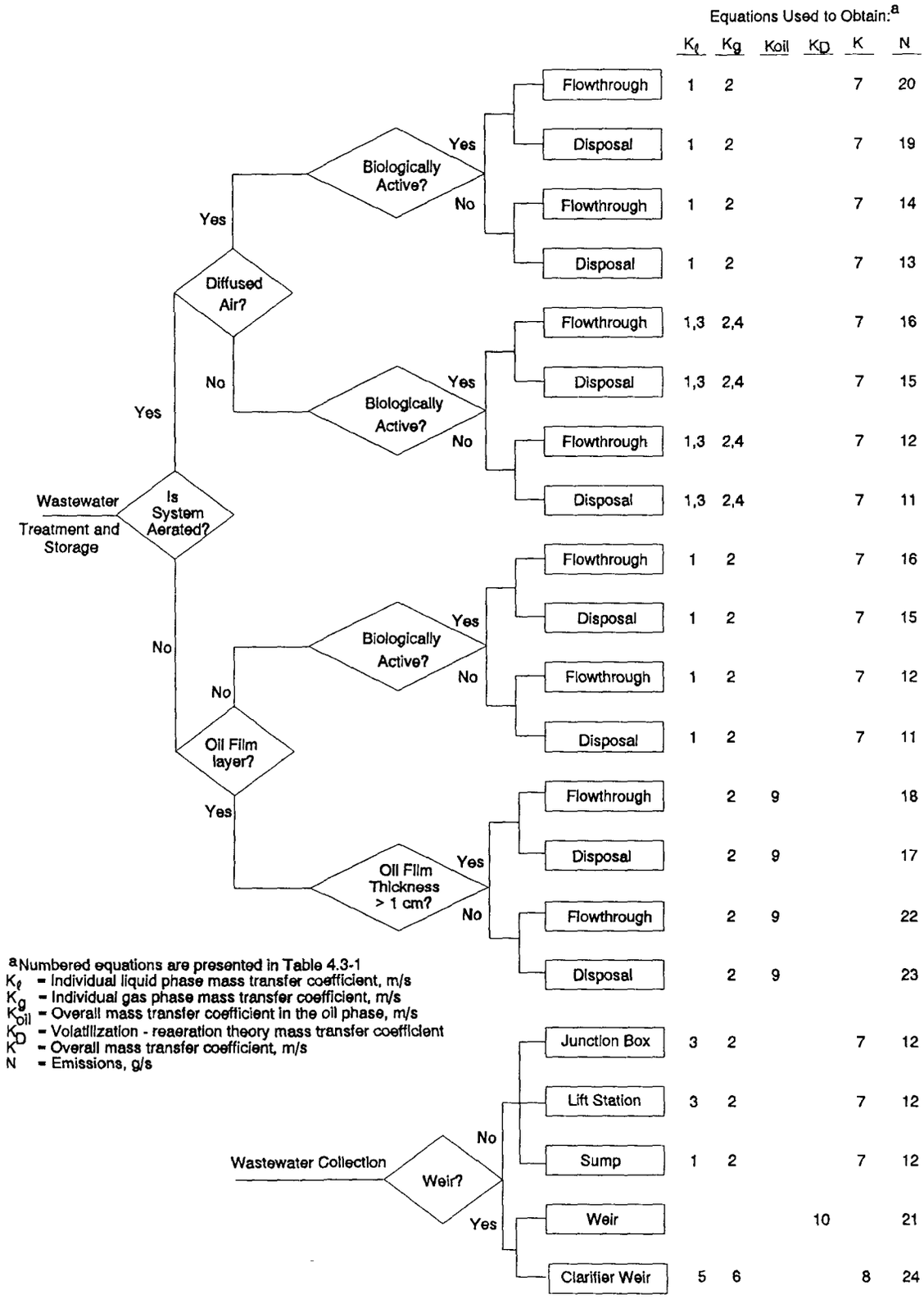

Figure 4.3.4. Flow diagram for estimating VOC emissions from waste water collection, treatment, and storage systems.

Table 4.3-1. MASS TRANSFER CORRELATIONS AND EMISSIONS EQUATIONS[a]

Equation No.	Equation
<u>Individual liquid (k_ℓ) and gas (k_g) phase mass transfer coefficients</u>	
1	k_ℓ (m/s) = $(2.78 \times 10^{-6})(D_w/D_{ether})^{2/3}$ For: $0 < U_{10} < 3.25$ m/s and all F/D ratios
	k_ℓ (m/s) = $[(2.605 \times 10^{-9})(F/D) + (1.277 \times 10^{-7})](U_{10})^2(D_w/D_{ether})^{2/3}$ For: $U_{10} > 3.25$ m/s and $14 < F/D < 51.2$
	k_ℓ (m/s) = $(2.61 \times 10^{-7})(U_{10})^2(D_w/D_{ether})^{2/3}$ For: $U_{10} > 3.25$ m/s and $F/D > 51.2$
	k_ℓ (m/s) = $1.0 \times 10^{-6} + 144 \times 10^{-4} (U^*)^{2.2} (Sc_L)^{-0.5}$; $U^* < 0.3$ k_ℓ (m/s) = $1.0 \times 10^{-6} + 34.1 \times 10^{-4} U^* (Sc_L)^{-0.5}$; $U^* > 0.3$ For: $U_{10} > 3.25$ m/s and $F/D < 14$ where: U^* (m/s) = $(0.01)(U_{10})(6.1 + 0.63(U_{10}))^{0.5}$ $Sc_L = \mu_L/(\rho_L D_w)$ $F/D = 2 (A/\pi)^{0.5}$
2	k_g (m/s) = $(4.82 \times 10^{-3})(U_{10})^{0.78} (Sc_G)^{-0.67} (d_e)^{-0.11}$ where: $Sc_G = \mu_a/(\rho_a D_a)$ d_e(m) = $2(A/\pi)^{0.5}$
3	k_ℓ (m/s) = $[(8.22 \times 10^{-9})(J)(POWR)(1.024)^{(T-20)}(O_t)(10^6) * (MW_L)/(Va_v\rho_L)](D_w/D_{O2,w})^{0.5}$ where: POWR (hp) = (total power to aerators)(V) $Va_v(ft^2)$ = (fraction of area agitated)(A)
4	k_g (m/s) = $(1.35 \times 10^{-7})(Re)^{1.42} (P)^{0.4} (Sc_G)^{0.5} (Fr)^{-0.21}(D_a MW_a/d)$ where: $Re = d^2 w \rho_a/\mu_a$ $P = [(0.85)(POWR)(550 \text{ ft-lb}_f\text{/s-hp})/N_I] g_c/(\rho_L(d^*)^5 w^3)$ $Sc_G = \mu_a/(\rho_a D_a)$ $Fr = (d^*)w^2/g_c$
5	k_ℓ (m/s) = $(f_{air,\ell})(Q)/[3600 \text{ s/min } (h_c)(\pi d_c)]$ where: $f_{air,\ell} = 1 - 1/r$ $r = \exp [0.77(h_c)^{0.623}(Q/\pi d_c)^{0.66}(D_w/D_{O2,w})^{0.66}]$
6	k_g (m/s) = $0.001 + (0.0462(U^{**})(Sc_G)^{-0.67})$ where: U^{**} (m/s) = $[6.1 + (0.63)(U_{10})]^{0.5}(U_{10}/100)$ $Sc_G = \mu_a/(\rho_a D_a)$

Table 4.3-1 (cont.).

Equation No.	Equation
<u>Overall mass transfer coefficients for water (K) and oil (K_{oil}) phases and for weirs (K_D)</u>	
7	$K = (k_\ell \, Keq \, k_g)/(Keq \, k_g + k_\ell)$ where: $Keq = H/(RT)$
8	$K \, (m/s) = [[MW_L/(k_{\ell\rho L}*(100 \, cm/m)] + [MW_a/(k_g \rho_a H* 55{,}555(100 \, cm/m))]]^{-1} \, MW_L/[(100 \, cm/m)\rho_L]$
9	$K_{oil} = k_g Keq_{oil}$ where: $Keq_{oil} = P^* \rho_a MW_{oil}/(\rho_{oil} \, MW_a \, P_o)$
10	$K_D = 0.16h \, (D_w/D_{O2,w})^{0.75}$
<u>Air emissions (N)</u>	
11	$N(g/s) = (1 - Ct/Co) \, V \, Co/t$ where: $Ct/Co = \exp[-K \, A \, t/V]$
12	$N(g/s) = K \, C_L \, A$ where: $C_L(g/m^3) = Q \, Co/(KA + Q)$
13	$N(g/s) = (1 - Ct/Co) \, V \, Co/t$ where: $Ct/Co = \exp[-(KA + KeqQ_a)t/V]$
14	$N(g/s) = (KA + Q_a Keq)C_L$ where: $C_L(g/m^3) = QCo/(KA + Q + Q_a Keq)$
15	$N(g/s) = (1 - Ct/Co) \, KA/(KA + Kmax \, b_i \, V/K_s) \, V \, Co/t$ where: $Ct/Co = \exp[-Kmax \, b_i \, t/K_s - K \, A \, t/V]$
16	$N(g/s) = K \, C_L \, A$ where: $C_L(g/m^3) = [-b + (b^2 - 4ac)^{0.5}]/(2a)$ and: $a = KA/Q + 1$ $b = K_s(KA/Q + 1) + Kmax \, b_i \, V/Q - Co$ $c = -K_s Co$

Table 4.3-1 (cont.).

Equation No.	Equation
17	$N(g/s) = (1 - Ct_{oil}/Co_{oil})V_{oil}Co_{oil}/t$ where: $Ct_{oil}/Co_{oil} = \exp[-K_{oil}\ t/D_{oil}]$ and: $Co_{oil} = Kow\ Co/[1 - FO + FO(Kow)]$ $V_{oil} = (FO)(V)$ $D_{oil} = (FO)(V)/A$
18	$N(g/s) = K_{oil}C_{L,oil}A$ where: $C_{L,oil}(g/m^3) = Q_{oil}Co_{oil}/(K_{oil}A + Q_{oil})$ and: $Co_{oil} = Kow\ Co/[1 - FO + FO(Kow)]$ $Q_{oil} = (FO)(Q)$
19	$N(g/s) = (1 - Ct/Co)(KA + Q_aKeq)/(KA + Q_aKeq + Kmax\ b_i\ V/K_s)\ V\ Co/t$ where: $Ct/Co = \exp[-(KA + KeqQ_a)t/V - Kmax\ b_i\ t/K_s]$
20	$N(g/s) = (KA + Q_aKeq)C_L$ where: $C_L(g/m^3) = [-b + (b^2 - 4ac)^{0.5}]/(2a)$ and: $a = (KA + Q_aKeq)/Q + 1$ $b = K_s[(KA + Q_aKeq)/Q + 1] + Kmax\ b_i\ V/Q - Co$ $c = -K_sCo$
21	$N\ (g/s) = (1 - \exp[-K_D])Q\ Co$
22	$N(g/s) = K_{oil}C_{L,oil}A$ where: $C_{L,oil}(g/m^3) = Q_{oil}(Co_{oil}^*)/(K_{oil}A + Q_{oil})$ and: $Co_{oil}^* = Co/FO$ $Q_{oil} = (FO)(Q)$
23	$N(g/s) = (1 - Ct_{oil}/Co_{oil}^*)(V_{oil})(Co_{oil}^*)/t$ where: $Ct_{oil}/Co_{oil}^* = \exp[-K_{oil}\ t/D_{oil}]$ and: $Co_{oil}^* = Co/FO$ $V_{oil} = (FO)(V)$ $D_{oil} = (FO)(V)/A$
24	$N\ (g/s) = (1 - \exp[-K\ \pi\ d_c\ h_c/Q])Q\ Co$

[a] All parameters in numbered equations are defined in Table 4.3-2.

Table 4.3-2. PARAMETER DEFINITIONS FOR MASS TRANSFER CORRELATIONS AND EMISSIONS EQUATIONS

Parameter	Definition	Units	Code[a]
A	Waste water surface area	m^2 or ft^2	A
b_i	Biomass concentration (total biological solids)	g/m^3	B
C_L	Concentration of constituent in the liquid phase	g/m^3	D
$C_{L,oil}$	Concentration of constituent in the oil phase	g/m^3	D
Co	Initial concentration of constituent in the liquid phase	g/m^3	A
Co_{oil}	Initial concentration of constituent in the oil phase considering mass transfer resistance between water and oil phases	g/m^3	D
Co_{oil}^*	Initial concentration of constituent in the oil phase considering no mass transfer resistance between water and oil phases	g/m^3	D
Ct	Concentration of constituent in the liquid phase at time = t	g/m^3	D
Ct_{oil}	Concentration of constituent in the oil phase at time = t	g/m^3	D
d	Impeller diameter	cm	B
D	Waste water depth	m or ft	A,B
d^*	Impeller diameter	ft	B
D_a	Diffusivity of constituent in air	cm^2/s	C
d_c	Clarifier diameter	m	B
d_e	Effective diameter	m	D
D_{ether}	Diffusivity of ether in water	cm^2/s	$(8.5x10^{-6})^b$
$D_{O2,w}$	Diffusivity of oxygen in water	cm^2/s	$(2.4x10^{-5})^b$
D_{oil}	Oil film thickness	m	B
D_w	Diffusivity of constituent in water	cm^2/s	C
$f_{air,\ell}$	Fraction of constituent emitted to the air, considering zero gas resistance	dimensionless	D
F/D	Fetch to depth ratio, d_e/D	dimensionless	D
FO	Fraction of volume which is oil	dimensionless	B
Fr	Froude number	dimensionless	D
g_c	Gravitation constant (a conversion factor)	lb_m-ft/s^2-lb_f	32.17

Table 4.3-2 (cont.).

Parameter	Definition	Units	Code[a]
h	Weir height (distance from the waste water overflow to the receiving body of water)	ft	B
h_c	Clarifier weir height	m	B
H	Henry's law constant of constituent	atm-m^3/gmol	C
J	Oxygen transfer rating of surface aerator	lb 02/(hr-hp)	B
K	Overall mass transfer coefficient for transfer of constituent from liquid phase to gas phase	m/s	D
K_D	Volatilization-reaeration theory mass transfer coefficient	dimensionless	D
Keq	Equilibrium constant or partition coefficient (concentration in gas phase/concentration in liquid phase)	dimensionless	D
Keq_{oil}	Equilibrium constant or partition coefficient (concentration in gas phase/concentration in oil phase)	dimensionless	D
k_g	Gas phase mass transfer coefficient	m/s	D
k_ℓ	Liquid phase mass transfer coefficient	m/s	D
Kmax	Maximum biorate constant	g/s-g biomass	A,C
K_{oil}	Overall mass transfer coefficient for transfer of constituent from oil phase to gas phase	m/s	D
Kow	Octanol-water partition coefficient	dimensionless	C
K_s	Half saturation biorate constant	g/m^3	A,C
MW_a	Molecular weight of air	g/gmol	29
MW_{oil}	Molecular weight of oil	g/gmol	B
MW_L	Molecular weight of water	g/gmol	18
N	Emissions	g/s	D
N_I	Number of aerators	dimensionless	A,B
O_t	Oxygen transfer correction factor	dimensionless	B
P	Power number	dimensionless	D
P^*	Vapor pressure of the constituent	atm	C
P_o	Total pressure	atm	A
POWR	Total power to aerators	hp	B
Q	Volumetric flow rate	m^3/s	A

Table 4.3-2 (cont.).

Parameter	Definition	Units	Code[a]
Q_a	Diffused air flow rate	m^3/s	B
Q_{oil}	Volumetric flow rate of oil	m^3/s	B
r	Deficit ratio (ratio of the difference between the constituent concentration at solubility and actual constituent concentration in the upstream and the downstream)	dimensionless	D
R	Universal gas constant	atm-m^3/gmol-K	8.21×10^{-5}
Re	Reynolds number	dimensionless	D
Sc_G	Schmidt number on gas side	dimensionless	D
Sc_L	Schmidt number on liquid side	dimensionless	D
T	Temperature of water	°C or Kelvin (K)	A
t	Residence time of disposal	s	A
U^*	Friction velocity	m/s	D
U^{**}	Friction velocity	m/s	D
U_{10}	Wind speed at 10 m above the liquid surface	m/s	B
V	Waste water volume	m^3 or ft^3	A
Va_v	Turbulent surface area	ft^2	B
V_{oil}	Volume of oil	m^3	B
w	Rotational speed of impeller	rad/s	B
ρ_a	Density of air	g/cm^3	$(1.2 \times 10^{-3})^b$
ρ_L	Density of water	g/cm^3 or lb/ft^3	1^b or 62.4^b
ρ_{oil}	Density of oil	g/m^3	B
μ_a	Viscosity of air	g/cm-s	$(1.81 \times 10^{-4})^b$
μ_L	Viscosity of water	g/cm-s	$(8.93 \times 10^{-3})^b$

[a] Code:
A = Site-specific parameter.
B = Site-specific parameter. For default values, see Table 4.3-3.
C = Parameter can be obtained from literature. See Attachment 1 for a list of ~150 compound chemical properties at T = 25°C (298°K).
D = Calculated value.

[b] Reported values at 25°C (298°K).

Table 4.3-3. SITE-SPECIFIC DEFAULT PARAMETERS[a]

Default Parameter[b]	Definition	Default Value
General		
T	Temperature of water	298°K
U_{10}	Windspeed	4.47 m/s
Biotreatment Systems		
b_i	Biomass concentration (for biologically active systems)	
	Quiescent treatment systems	50 g/m^3
	Aerated treatment systems	300 g/m^3
	Activated sludge units	4000 g/m^3
POWR	Total power to aerators (for aerated treatment systems) (for activated sludge)	 0.75 hp/1000 ft^3 (V) 2 hp/1000 ft^3 (V)
W	Rotational speed of impeller (for aerated treatment systems)	 126 rad/s (1200 rpm)
$d(d^*)$	Impeller diameter (for aerated treatment systems)	 61 cm (2 ft)
Va_v	Turbulent surface area (for aerated treatment systems) (for activated sludge)	 0.24 (A) 0.52 (A)
J	Oxygen transfer rating to surface aerator (for aerated treatment systems)	 3 lb O_2/hp•hr
O_t	Oxygen transfer correction factor (for aerated treatment systems)	 0.83
N_I	Number of aerators	POWR/75
Diffused Air Systems		
Q_a	Diffused air volumetric flow rate	0.0004(V) m^3/s
Oil Film Layers		
MW_{oil}	Molecular weight of oil	282 g/gmol
D_{oil}	Depth of oil layer	0.001 (V/A) m
V_{oil}	Volume of oil	0.001 (V) m^3
Q_{oil}	Volumetric flow rate of oil	0.001 (Q) m^3/s
ρ_{oil}	Density of oil	0.92 g/cm^3

Table 4.3-3 (cont.).

Default Parameter[b]	Definition	Default Value
FO	Fraction of volume which is oil[c]	0.001
Junction Boxes		
D	Depth of Junction Box	0.9 m
N_I	Number of aerators	1
Lift Station		
D	Depth of Lift Station	1.5 m
N_I	Number of aerators	1
Sump		
D	Depth of sump	5.9 m
Weirs		
d_c	Clarifier weir diameter[d]	28.5 m
h	Weir height	1.8 m
h_c	Clarifier weir height[e]	0.1 m

[a] Reference 1.
[b] As defined in Table 4.3-2.
[c] Reference 4.
[d] Reference 2.
[e] Reference 5.

Waste water falls or overflows from weirs and creates splashing in the receiving body of water (both weir and clarifier weir models). Waste water from weirs can be aerated by directing it to fall over steps, usually only the weir model.

Assessing VOC emissions from drains, manholes, and trenches is also important in determining the total waste water facility emissions. As these sources can be open to the atmosphere and closest to the point of waste water generation (i. e., where water temperatures and pollutant concentrations are greatest), emissions can be significant. Currently, there are no well-established emission models for these collection system types. However, work is being performed to address this need.

Preliminary models of VOC emissions from waste collection system units have been developed.[4] The emission equations presented in Reference 4 are used with standard collection system parameters to estimate the fraction of the constituents released as the waste water flows through each unit. The fractions released from several units are estimated for high-, medium-, and low-volatility compounds. The units used in the estimated fractions included open drains, manhole covers, open trench drains, and covered sumps.

The numbers in Figure 4.3-4 under the columns for k_ℓ, k_g, K_{oil}, K_D, K, and N refer to the appropriate equations in Table 4.3-1.[a] Definitions for all parameters in these equations are given in Table 4.3-2. Table 4.3-2 also supplies the units that must be used for each parameter, with codes to help locate input values. If the parameter is coded with the letter A, a site-specific value is required. Code B also requires a site-specific parameter, but defaults are available. These defaults are typical or average values and are presented by specific system in Table 4.3-3.

Code C means the parameter can be obtained from literature data. Table 4.3-4 contains a list of approximately 150 chemicals and their physical properties needed to calculate emissions from waste water, using the correlations presented in Table 4.3-1. All properties are at 25°C (77°F).
A more extensive chemical properties data base is contained in Appendix C of Reference 1.)
Parameters coded D are calculated values.

Calculating air emissions from waste water collection, treatment, and storage systems is a complex procedure, especially if several systems are present. Performing the calculations by hand may result in errors and will be time consuming. A personal computer program called the Surface Impoundment Modeling System (SIMS) is now available for estimating air emissions. The program is menu driven and can estimate air emissions from all surface impoundment models presented in Figure 4.3-4, individually or in series. The program requires for each collection, treatment, or storage system component, at a minimum, the waste water flow rate and component surface area. All other inputs are provided as default values. Any available site-specific information should be entered in place of these defaults, as the most fully characterized system will provide the most accurate emissions estimate.

The SIMS program with user's manual and background technical document can be obtained through state air pollution control agencies and through the U. S. Environmental Protection Agency's Control Technology Center in Research Triangle Park, NC, telephone (919) 541-0800. The user's manual and background technical document should be followed to produce meaningful results.

The SIMS program and user's manual also can be downloaded from EPA's Clearinghouse For Inventories and Emission Factors (CHIEF) electronic bulletin board (BB). The CHIEF BB is open to all persons involved in air emission inventories. To access this BB, one needs a computer, modem, and communication package capable of communicating at up to 14,400 baud, 8 data bits, 1 stop bit, and no parity (8-N-1). This BB is part of EPA's OAQPS Technology Transfer Network system and its telephone number is (919) 541-5742. First-time users must register before access is allowed.

Emissions estimates from SIMS are based on mass transfer models developed by Emissions Standards Division (ESD) during evaluations of TSDFs and VOC emissions from industrial waste water. As a part of the TSDF project, a Lotus® spreadsheet program called CHEMDAT7 was developed for estimating VOC emissions from waste water land treatment systems, open landfills, closed landfills, and waste storage piles, as well as from various types of surface impoundments. For more information about CHEMDAT7, contact the ESD's Chemicals And Petroleum Branch (MD 13), US EPA, Research Triangle Park, NC 27711.

---

[a]All emission model systems presented in Figure 4.3-4 imply a completely mixed or uniform waste water concentration system. Emission models for a plug flow system, or system in which there is no axial, or horizontal mixing, are too extensive to be covered in this document. (An example of plug flow might be a high waste water flow in a narrow channel.) For information on emission models of this type, see Reference 1.

4.3.2.1 Example Calculation -

An example industrial facility operates a flowthrough, mechanically aerated biological treatment impoundment that receives waste water contaminated with benzene at a concentration of 10.29 g/m^3.

The following format is used for calculating benzene emissions from the treatment process:

I. Determine which emission model to use
II. User-supplied information
III. Defaults
IV. Pollutant physical property data and water, air, and other properties
V. Calculate individual mass transfer coefficient
VI. Calculate the overall mass transfer coefficients
VII. Calculate VOC emissions

I. Determine Which Emission Model To Use — Following the flow diagram in Figure 4.3-4, the emission model for a treatment system that is aerated, but not by diffused air, is biologically active, and is a flowthrough system, contains the following equations:

Parameter	Definition	Equation Nos. from Table 4.3-1
K	Overall mass transfer coefficient, m/s	7
k_ℓ	Individual liquid phase mass transfer coefficient, m/s	1,3
k_g	Individual gas phase mass transfer coefficient, m/s	2,4
N	VOC emissions, g/s	16

II. User-supplied Information — Once the correct emission model is determined, some site-specific parameters are required. As a minimum for this model, site-specific flow rate, waste water surface area and depth, and pollutant concentration should be provided. For this example, these parameters have the following values:

Q = Volumetric flow rate = 0.0623 m^3/s
D = Waste water depth = 1.97 m
A = Waste water surface area = 17,652 m^2
Co = Initial benzene concentration in the liquid phase = 10.29 g/m^3

III. Defaults — Defaults for some emission model parameters are presented in Table 4.3-3. Generally, site-specific values should be used when available. For this facility, all available general and biotreatment system defaults from Table 4.3-3 were used:

U_{10} = Wind speed at 10 m above the liquid surface = e = 4.47 m/s
T = Temperature of water = 25°C (298°K)
b_i = Biomass concentration for aerated treatment systems = 300 g/m^3
J = Oxygen transfer rating to surface aerator = 3 lb O_2/hp-hr
POWR = Total power to aerators = 0.75 hp/1,000 ft^3 (V)
O_t = Oxygen transfer correction factor = 0.83
Va_v = Turbulent surface area = 0.24 (A)
d = Impeller diameter = 61 cm

d^* = Impeller diameter = 2 ft
w = Rotational speed of impeller = 126 rad/s
N_I = Number of aerators = POWR/75 hp

IV. Pollutant Physical Property Data, And Water, Air and Other Properties — For each pollutant, the specific physical properties needed by this model are listed in Table 4.3-4. Water, air, and other property values are given in Table 4.3-2.

A. Benzene (from Table 4.3-4)

$D_{w,benzene}$ = Diffusivity of benzene in water = 9.8×10^{-6} cm^2/s
$D_{a,benzene}$ = Diffusivity of benzene in air = 0.088 cm^2/s
$H_{benzene}$ = Henry's law constant for benzene = 0.0055 atm- m^3/gmol
$Kmax_{benzene}$ = Maximum biorate constant for benzene = 5.28×10^{-6} g/g-s
$K_{s,benzene}$ = Half saturation biorate constant for benzene = 13.6 g/m^3

B. Water, Air, and Other Properties (from Table 4.3-3)

ρ_a = Density of air = 1.2×10^3 g/cm^3
ρ_L = Density of water = 1 g/cm^3 (62.4 lb_m/ft^3)
μ_a = Viscosity of air = 1.81×10^{-4} g/cm-s
$D_{O2,w}$ = Diffusivity of oxygen in water = 2.4×10^{-5} cm^2/s
D_{ether} = Diffusivity of ether in water = 8.5×10^{-6} cm^2/s
MW_L = Molecular weight of water = 18 g/gmol
MW_a = Molecular weight of air = 29 g/gmol
g_c = Gravitation constant = 32.17 lb_m-ft/lb_f-s^2
R = Universal gas constant = 8.21×10^{-5} atm-m^3/gmol

V. Calculate Individual Mass Transfer Coefficients — Because part of the impoundment is turbulent and part is quiescent, individual mass transfer coefficients are determined for both turbulent and quiescent areas of the surface impoundment.

<u>Turbulent area of impoundment</u> — Equations 3 and 4 from Table 4.3-1.

A. Calculate the individual liquid mass transfer coefficient, k_ℓ:

$$k_\ell(m/s) = [(8.22 \times 10^{-9})(J)(POWR)(1.024)^{(T-20)} * (O_t)(10^6)MW_L/(Va_v\rho_L)](D_w/D_{O2,w})^{0.5}$$

The total power to the aerators, POWR, and the turbulent surface area, Va_v, are calculated separately [Note: some conversions are necessary.]:

1. Calculate total power to aerators, POWR (Default presented in III):

POWR (hp) = 0.75 hp/1,000 ft^3 (V)
V = waste water volume, m^3
V (m^3) = (A)(D) = (17,652 m^2)(1.97 m)
V = 34,774 m^3
POWR = (0.75 hp/1,000 ft^3)(ft^3/0.028317 m^3)(34,774 m^3)
= 921 hp

2. Calculate turbulent surface area, Va_v (default presented in III):

Va_v (ft^2) = 0.24 (A)
= 0.24(17,652 m^2)(10.758 ft^2/m^2)
= 45,576 ft^2

Now, calculate k_ℓ, using the above calculations and information from II, III, and IV:

$$k_\ell \text{ (m/s)} = [(8.22 \times 10^{-9})(3 \text{ lb } O_2\text{/hp-hr})(921 \text{ hp}) * (1.024)^{(25-20)}(0.83)(10^6)(18 \text{ g/gmol})/((45{,}576 \text{ ft}^2)(1 \text{ g/cm}^3))] * [(9.8 \times 10^{-6} \text{ cm}^2\text{/s})/(2.4 \times 10^{-5} \text{ cm}^2\text{/s})]^{0.5}$$
$$= (0.00838)(0.639)$$
$$k_\ell = 5.35 \times 10^{-3} \text{ m/s}$$

B. Calculate the individual gas phase mass transfer coefficient, k_g:

$$k_g \text{ (m/s)} = (1.35 \times 10^{-7})(Re)^{1.42}(P)^{0.4}(Sc_G)^{0.5}(Fr)^{-0.21}(D_a\ MW_a/d)$$

The Reynolds number, Re, power number, P, Schmidt number on the gas side, Sc_G, and Froude's number Fr, are calculated separately:

1. Calculate Reynolds number, Re:

$$Re = d^2\ w\ \rho_a/\mu_a$$
$$= (61 \text{ cm})^2(126 \text{ rad/s})(1.2 \times 10^{-3} \text{ g/cm}^3)/(1.81 \times 10^{-4} \text{ g/cm-s})$$
$$= 3.1 \times 10^6$$

2. Calculate power number, P:

$$P = [(0.85)(POWR)(550 \text{ ft-lb}_f\text{/s-hp})/N_I]\ g_c/(\rho_L(d^*)^5\ w^3)$$
$$N_I = POWR/75 \text{ hp (default presented in III)}$$
$$P = (0.85)(75 \text{ hp})(POWR/POWR)(550 \text{ ft-lb}_f\text{/s-hp}) * (32.17 \text{ lb}_m\text{-ft/lb}_f\text{-s}^2)/[(62.4 \text{ lb}_m\text{/ft}^3)(2 \text{ ft})^5(126 \text{ rad/s})^3]$$
$$= 2.8 \times 10^{-4}$$

3. Calculate Schmidt number on the gas side, Sc_G:

$$Sc_G = \mu_a/(\rho_a D_a)$$
$$= (1.81 \times 10^{-4} \text{ g/cm-s})/[(1.2 \times 10^{-3} \text{ g/cm}^3)(0.088 \text{ cm}^2\text{/s})]$$
$$= 1.71$$

4. Calculate Froude number, Fr:

$$Fr = (d^*)w^2/g_c$$
$$= (2 \text{ ft})(126 \text{ rad/s})^2/(32.17 \text{ lb}_m\text{-ft/lb}_f\text{-s}^2)$$
$$= 990$$

Now, calculate k_g using the above calculations and information from II, III, and IV:

$$k_g \text{ (m/s)} = (1.35 \times 10^{-7})(3.1 \times 10^6)^{1.42}(2.8 \times 10^{-4})^{0.4}(1.71)^{0.5} * (990)^{-0.21}(0.088 \text{ cm}^2\text{/s})(29 \text{ g/gmol})/(61 \text{ cm})$$
$$= 0.109 \text{ m/s}$$

<u>Quiescent surface area of impoundment</u> — Equations 1 and 2 from Table 4.3-1

A. Calculate the individual liquid phase mass transfer coefficient, k_ℓ:

$$F/D = 2(A/\pi)^{0.5}/D$$
$$= 2(17{,}652 \text{ m}^2/\pi)^{0.5}/(1.97 \text{ m})$$
$$= 76.1$$
$$U_{10} = 4.47 \text{ m/s}$$

For $U_{10} > 3.25$ m/s and F/D > 51.2 use the following:

$$k_\ell \text{ (m/s)} = (2.61 \times 10^{-7})(U_{10})^2(D_w/D_{ether})^{2/3}$$
$$= (2.61 \times 10^{-7})(4.47 \text{ m/s})^2[(9.8 \times 10^{-6} \text{ cm}^2/\text{s})/(8.5 \times 10^{-6} \text{ cm}^2/\text{s})]^{2/3}$$
$$= 5.74 \times 10^{-6} \text{ m/s}$$

B. Calculate the individual gas phase mass transfer coefficient, k_g:

$$k_g = (4.82 \times 10^{-3})(U_{10})^{0.78}(Sc_G)^{-0.67}(d_e)^{-0.11}$$

The Schmidt number on the gas side, Sc_G, and the effective diameter, d_e, are calculated separately:

1. Calculate the Schmidt number on the gas side, Sc_G:

$$Sc_G = \mu_a/(\rho_a D_a) = 1.71 \text{ (same as for turbulent impoundments)}$$

2. Calculate the effective diameter, d_e:

$$d_e \text{ (m)} = 2(A/\pi)^{0.5}$$
$$= 2(17{,}652 \text{ m}^2/\pi)^{0.5}$$
$$= 149.9 \text{ m}$$
$$k_g\text{(m/s)} = (4.82 \times 10^{-3})(4.47 \text{ m/s})^{0.78}(1.71)^{-0.67}(149.9 \text{ m})^{-0.11}$$
$$= 6.24 \times 10^{-3} \text{ m/s}$$

VI. Calculate The Overall Mass Transfer Coefficient — Because part of the impoundment is turbulent and part is quiescent, the overall mass transfer coefficient is determined as an area-weighted average of the turbulent and quiescent overall mass transfer coefficients. (Equation 7 from Table 4.3-1).

<u>Overall mass transfer coefficient for the turbulent surface area of impoundment, K_T</u>

$$K_T \text{ (m/s)} = (k_\ell Keq k_g)/(Keq k_g + k_\ell)$$
$$Keq = H/RT$$
$$= (0.0055 \text{ atm-m}^3/\text{gmol})/[(8.21 \times 10^{-5} \text{ atm-m}^3/\text{ gmol-°K})(298\text{°K})]$$
$$= 0.225$$
$$K_T \text{ (m/s)} = (5.35 \times 10^{-3} \text{ m/s})(0.225)(0.109)/[(0.109 \text{ m/s})(0.225) + (5.35 \times 10^{-6} \text{ m/s})]$$
$$K_T = 4.39 \times 10^{-3} \text{ m/s}$$

<u>Overall mass transfer coefficient for the quiescent surface area of impoundment, K_Q</u>

$$K_Q \text{ (m/s)} = (k_\ell Keq k_g)/(Keq k_g + k_\ell)$$
$$= (5.74 \times 10^{-6} \text{ m/s})(0.225)(6.24 \times 10^{-3} \text{ m/s})/[(6.24 \text{ X } 10^{-3} \text{ m/s})(0.225) + (5.74 \times 10^{-6} \text{ m/s})]$$
$$= 5.72 \times 10^{-6} \text{ m/s}$$

<u>Overall mass transfer coefficient, K, weighted by turbulent and quiescent surface areas, A_T and A_Q</u>

$$K \text{ (m/s)} = (K_T A_T + K_Q A_Q)/A$$
$$A_T = 0.24(A) \text{ (Default value presented in III: } A_T = Va_v)$$
$$A_Q = (1 - 0.24)A$$
$$K \text{ (m/s)} = [(4.39 \times 10^{-3} \text{ m/s})(0.24 \text{ A}) + (5.72 \times 10^{-6} \text{ m/s})(1 - 0.24)A]/A$$
$$= 1.06 \times 10^{-3} \text{ m/s}$$

VII. Calculate VOC Emissions For An Aerated Biological Flowthrough Impoundment — Equation 16 from Table 4.3-1:

$$N\ (g/s) = K\ C_L\ A$$

where:

$$C_L\ (g/m^3) = [-b + (b^2 - 4ac)^{0.5}]/(2a)$$

and:

$$a = KA/Q + 1$$
$$b = K_s(KA/Q + 1) + Kmax\ b_i\ V/Q - Co$$
$$c = -K_sCo$$

Calculate a, b, c, and the concentration of benzene in the liquid phase, C_L, separately:

1. Calculate a:

$$a = (KA/Q + 1) = [(1.06 \times 10^{-3}\ m/s)(17{,}652\ m^2)/(0.0623\ m^3/s)] + 1$$
$$= 301.3$$

2. Calculate b ($V = 34{,}774\ m^3$ from IV):

$$b = K_s\ (KA/Q + 1) + Kmax\ b_i\ V/Q - Co$$
$$= (13.6\ g/m^3)[(1.06 \times 10^{-3}\ m/s)(17{,}652\ m^2)/(0.0623\ m^3/s)] +$$
$$[(5.28 \times 10^{-6}\ g/g\text{-}s)(300\ g/m^3)(34{,}774\ m^3)/(0.0623\ m^3/s)] - 10.29\ g/m^3$$
$$= 4{,}084.6 + 884.1 - 10.29$$
$$= 4{,}958.46\ g/m^3$$

3. Calculate c:

$$c = -K_sCo$$
$$= -(13.6\ g/m^3)(10.29\ g/m^3)$$
$$= -139.94$$

4. Calculate the concentration of benzene in the liquid phase, C_L, from a, b, and c above:

$$C_L\ (g/m^3) = [-b + (b^2 - 4ac)^{0.5}]/(2a)$$
$$= [(4{,}958.46\ g/m^3) + [(4{,}958.46\ g/m^3)^2 -$$
$$[4(301.3)(-139.94)]]^{0.5}]/(2(301.3))$$
$$= 0.0282\ g/m^3$$

Now calculate N with the above calculations and information from II and V:

$$N\ (g/s) = K\ A\ C_L$$
$$= (1.06 \times 10^{-3}\ m/s)(17{,}652\ m^2)(0.0282\ g/m^3)$$
$$= 0.52\ g/s$$

4.3.3 Controls

The types of control technology generally used in reducing VOC emissions from waste water include: steam stripping or air stripping, carbon adsorption (liquid phase), chemical oxidation, membrane separation, liquid-liquid extraction, and biotreatment (aerobic or anaerobic). For efficient control, all control elements should be placed as close as possible to the point of waste water generation, with all collection, treatment, and storage systems ahead of the control technology being covered to suppress emissions. Tightly covered, well-maintained collection systems can suppress

emissions by 95 to 99 percent. However, if there is explosion potential, the components should be vented to a control device such as an incinerator or carbon adsorber.

The following are brief descriptions of the control technology listed above and of any secondary controls that may need to be considered for fugitive air emissions.

Steam stripping is the fractional distillation of waste water to remove volatile organic constituents, with the basic operating principle being the direct contact of steam with waste water. The steam provides the heat of vaporization for the more volatile organic constituents. Removal efficiencies vary with volatility and solubility of the organic impurities. For highly volatile compounds (HLC greater than 10^{-3} atm-m^3/gmol), average VOC removal ranges from 95 to 99 percent. For medium-volatility compounds (HLC between 10^{-5} and 10^{-3} atm-m^3/gmol), average removal ranges from 90 to 95 percent. For low-volatility compounds (HLC $<10^{-5}$ atm-m^3/gmol), average removal ranges from less than 50 to 90 percent.

Air stripping involves the contact of waste water and air to strip out volatile organic constituents. By forcing large volumes of air through contaminated water, the surface area of water in contact with air is greatly increased, resulting in an increase in the transfer rate of the organic compounds into the vapor phase. Removal efficiencies vary with volatility and solubility of organic impurities. For highly volatile compounds, average removal ranges from 90 to 99 percent; for medium- to low-volatility compounds, removal ranges from less than 50 to 90 percent.

Steam stripping and air stripping controls most often are vented to a secondary control, such as a combustion device or gas phase carbon adsorber. Combustion devices may include incinerators, boilers, and flares. Vent gases of high fuel value can be used as an alternate fuel. Typically, vent gas is combined with other fuels such as natural gas and fuel oil. If the fuel value is very low, vent gases can be heated and combined with combustion air. It is important to note that organics such as chlorinated hydrocarbons can emit toxic pollutants when combusted.

Secondary control by gas phase carbon adsorption processes takes advantage of compound affinities for activated carbon. The types of gas phase carbon adsorption systems most commonly used to control VOC are fixed-bed carbon adsorbers and carbon canisters. Fixed-bed carbon adsorbers are used to control continuous organic gas streams with flow rates ranging from 30 to over 3000 m^3/min. Canisters are much simpler and smaller than fixed-bed systems and are usually installed to control gas flows of less than 3 m^3/min.[4] Removal efficiencies depend highly on the type of compound being removed. Pollutant-specific activated carbon is usually required. Average removal efficiency ranges from 90 to 99 percent.

Like gas phase carbon adsorption, liquid phase carbon adsorption takes advantage of compound affinities for activated carbon. Activated carbon is an excellent adsorbent, because of its large surface area and because it is usually in granular or powdered form for easy handling. Two types of liquid phase carbon adsorption are the fixed-bed and moving-bed systems. The fixed-bed system is used primarily for low-flow waste water streams with contact times around 15 minutes, and it is a batch operation (i. e., once the carbon is spent, the system is taken off line). Moving-bed carbon adsorption systems operate continuously with waste water typically being introduced from the bottom of the column and regenerated carbon from the top (countercurrent flow). Spent carbon is continuously removed from the bottom of the bed. Liquid phase carbon adsorption is usually used for low concentrations of nonvolatile components and for high concentrations of nondegradable compounds.[5] Removal efficiencies depend on whether the compound is adsorbed on activated carbon. Average removal efficiency ranges from 90 to 99 percent.

Chemical oxidation involves a chemical reaction between the organic compound and an oxidant such as ozone, hydrogen peroxide, permanganate, or chlorine dioxide. Ozone is usually added to the waste water through an ultraviolet-ozone reactor. Permanganate and chlorine dioxide are added directly into the waste water. It is important to note that adding chlorine dioxide can form chlorinated hydrocarbons in a side reaction. The applicability of this technique depends on the reactivity of the individual organic compound.

Two types of membrane separation processes are ultrafiltration and reverse osmosis. Ultrafiltration is primarily a physical sieving process driven by a pressure gradient across the membrane. This process separates organic compounds with molecular weights greater than 2000, depending on the size of the membrane pore. Reverse osmosis is the process by which a solvent is forced across a semipermeable membrane because of an osmotic pressure gradient. Selectivity is, therefore, based on osmotic diffusion properties of the compound and on the molecular diameter of the compound and membrane pores.[4]

Liquid-liquid extraction as a separation technique involves differences in solubility of compounds in various solvents. Contacting a solution containing the desired compound with a solvent in which the compound has a greater solubility may remove the compound from the solution. This technology is often used for product and process solvent recovery. Through distillation, the target compound is usually recovered, and the solvent reused.

Biotreatment is the aerobic or anaerobic chemical breakdown of organic chemicals by microorganisms. Removal of organics by biodegradation is highly dependent on the compound's biodegradability, its volatility, and its ability to be adsorbed onto solids. Removal efficiencies range from almost zero to 100 percent. In general, highly volatile compounds such as chlorinated hydrocarbons and aromatics will biodegrade very little because of their high-volatility, while alcohols and other compounds soluble in water, as well as low-volatility compounds, can be almost totally biodegraded in an acclimated system. In the acclimated biotreatment system, the microorganisms easily convert available organics into biological cells, or biomass. This often requires a mixed culture of organisms, where each organism utilizes the food source most suitable to its metabolism. The organisms will starve and the organics will not be biodegraded if a system is not acclimated, i. e., the organisms cannot metabolize the available food source.

4.3.4 Glossary Of Terms

Basin - an earthen or concrete-lined depression used to hold liquid.

Completely mixed - having the same characteristics and quality throughout or at all times.

Disposal - the act of permanent storage. Flow of liquid into, but not out of a device.

Drain - a device used for the collection of liquid. It may be open to the atmosphere or be equipped with a seal to prevent emissions of vapors.

Flowthrough - having a continuous flow into and out of a device.

Plug flow - having characteristics and quality not uniform throughout. These will change in the direction the fluid flows, but not perpendicular to the direction of flow (i. e., no axial movement)

Storage -	any device to accept and retain a fluid for the purpose of future discharge. Discontinuity of flow of liquid into and out of a device.
Treatment -	the act of improving fluid properties by physical means. The removal of undesirable impurities from a fluid.
VOC -	volatile organic compounds, referring to all organic compounds except the following, which have been shown not to be photochemically reactive: methane, ethane, trichlorotrifluoroethane, methylene chloride, 1,1,1,-trichloroethane, trichlorofluoromethane, dichlorodifluoromethane, chlorodifluoromethane, trifluoromethane, dichlorotetrafluoroethane, and chloropentafluoroethane.

Table 4.3-4. SIMS CHEMICAL PROPERTY DATA FILE (PART 1)

Chemical Name	CAS Number	Molecular Weight	Vapor Pressure At 25°C (mm Hg)	Henry's Law Constant At 25°C (atm·m^3/mol)	Diffusivity Of Chemical In Water At 25°C (cm^2/s)	Diffusivity Of Chemical In Air At 25°C (cm^2/s)
ACETALDEHYDE	75-07-0	44.00	760	0.000095	0.0000141	0.124
ACETIC ACID	64-19-7	60.05	15.4	0.0627	0.000012	0.113
ACETIC ANHYDRIDE	108-24-7	102.09	5.29	0.00000591	0.00000933	0.235
ACETONE	67-64-1	58.00	266	0.000025	0.0000114	0.124
ACETONITRILE	75-05-8	41.03	90	0.0000058	0.0000166	0.128
ACROLEIN	107-02-8	56.10	244.2	0.0000566	0.0000122	0.105
ACRYLAMIDE	79-06-1	71.09	0.012	0.00000000052	0.0000106	0.097
ACRYLIC ACID	79-10-7	72.10	5.2	0.0000001	0.0000106	0.098
ACRYLONITRILE	107-13-1	53.10	114	0.000088	0.0000134	0.122
ADIPIC ACID	124-04-9	146.14	0.0000225	0.00000000005	0.00000684	0.0659
ALLYL ALCOHOL	107-18-6	58.10	23.3	0.000018	0.0000114	0.114
AMINOPHENOL(-O)	95-55-6	109.12	0.511	0.00000367	0.00000864	0.0774
AMINOPHENOL(-P)	123-30-8	109.12	0.893	0.0000197	0.00000239	0.0774
AMMONIA	7664-41-7	17.03	7470	0.000328	0.0000693	0.259
AMYL ACETATE(-N)	628-37-8	130.18	5.42	0.000464	0.0000012	0.064
ANILINE	62-53-3	93.10	1	0.0000026	0.0000083	0.07
BENZENE	71-43-2	78.10	95.2	0.0055	0.0000098	0.088
BENZO(A)ANTHRACENE	56-55-3	228.30	0.00000015	0.00000000138	0.000009	0.051
BENZO(A)PYRENE	50-32-8	252.30	0.00568	0.00000000138	0.000009	0.043

Table 4.3-4 (Part 1) (cont.).

Chemical Name	CAS Number	Molecular Weight	Vapor Pressure At 25°C (mm Hg)	Henry's Law Constant At 25°C (atm·m^3/mol)	Diffusivity Of Chemical In Water At 25°C (cm^2/s)	Diffusivity Of Chemical In Air At 25°C (cm^2/s)
CRESYLIC ACID	1319-77-3	108.00	0.3	0.0000017	0.0000083	0.074
CROTONALDEHYDE	4170-30-0	70.09	30	0.00000154	0.0000102	0.0903
CUMENE (ISOPROPYLBENZENE)	98-82-8	120.20	4.6	0.0146	0.0000071	0.065
CYCLOHEXANE	110-82-7	84.20	100	0.0137	0.0000091	0.0839
CYCLOHEXANOL	108-93-0	100.20	1.22	0.00000447	0.00000831	0.214
CYCLOHEXANONE	108-94-1	98.20	4.8	0.00000413	0.00000862	0.0784
DI-N-OCTYL PHTHALATE	117-84-0	390.62	0	0.137	0.0000041	0.0409
DIBUTYLPHTHALATE	84-74-2	278.30	0.00001	0.00000028	0.0000079	0.0438
DICHLORO(-2)BUTENE(1,4)	764-41-0	125.00	2.87	0.000259	0.00000812	0.0725
DICHLOROBENZENE(1,2) (-O)	95-50-1	147.00	1.5	0.00194	0.0000079	0.069
DICHLOROBENZENE(1,3) (-M)	541-73-1	147.00	2.28	0.00361	0.0000079	0.069
DICHLOROBENZENE(1,4) (-P)	106-46-7	147.00	1.2	0.0016	0.0000079	0.069
DICHLORODIFLUOROMETHANE	75-71-8	120.92	5000	0.401	0.00001	0.0001
DICHLOROETHANE(1,1)	75-34-3	99.00	234	0.00554	0.0000105	0.0914
DICHLOROETHANE(1,2)	107-06-2	99.00	80	0.0012	0.0000099	0.104
DICHLOROETHYLENE(1,2)	156-54-2	96.94	200	0.0319	0.000011	0.0935
DICHLOROPHENOL(2,4)	120-83-2	163.01	0.1	0.0000048	0.0000076	0.0709
DICHLOROPHENOXYACETIC ACID(2,4)	94-75-7	221.00	290	0.0621	0.00000649	0.0588
DICHLOROPROPANE(1,2)	78-87-5	112.99	40	0.0023	0.0000087	0.0782
DIETHYL (N,N) ANILIN	91-66-7	149.23	0.00283	0.0000000574	0.00000587	0.0513

Table 4.3-4 (Part 1) (cont.).

Chemical Name	CAS Number	Molecular Weight	Vapor Pressure At 25°C (mm Hg)	Henry's Law Constant At 25°C (atm·m^3/mol)	Diffusivity Of Chemical In Water At 25°C (cm^2/s)	Diffusivity Of Chemical In Air At 25°C (cm^2/s)
DIETHYL PHTHALATE	84-66-2	222.00	0.003589	0.0111	0.0000058	0.0542
DIMETHYL FORMAMIDE	68-12-2	73.09	4	0.0000192	0.0000103	0.0939
DIMETHYL HYDRAZINE(1,1)	57-14-7	60.10	157	0.000124	0.0000109	0.106
DIMETHYL PHTHALATE	131-11-3	194.20	0.000187	0.00000215	0.0000063	0.0568
DIMETHYLBENZ(A)ANTHRACENE	57-97-6	256.33	0	0.00000000027	0.00000498	0.0461
DIMETHYLPHENOL(2,4)	105-67-9	122.16	0.0573	0.000921	0.0000084	0.0712
DINITROBENZENE (-M)	99-65-0	168.10	0.05	0.000022	0.00000764	0.279
DINITROTOLUENE(2,4)	121-14-2	182.10	0.0051	0.00000407	0.00000706	0.203
DIOXANE(1,4)	123-91-1	88.20	37	0.0000231	0.0000102	0.229
DIOXIN	NOCAS2	322.00	0	0.0000812	0.0000056	0.104
DIPHENYLAMINE	122-39-4	169.20	0.00375	0.00000278	0.00000631	0.058
EPICHLOROHYDRIN	106-89-8	92.50	17	0.0000323	0.0000098	0.086
ETHANOL	64-17-5	46.10	50	0.0000303	0.000013	0.123
ETHANOLAMINE(MONO-)	141-43-5	61.09	0.4	0.000000322	0.0000114	0.107
ETHYL ACRYLATE	140-88-5	100.00	40	0.00035	0.0000086	0.077
ETHYL CHLORIDE	75-00-3	64.52	1200	0.014	0.0000115	0.271
ETHYL-(2)PROPYL-(3) ACROLEIN	645-62-5	92.50	17	0.0000323	0.0000098	0.086
ETHYLACETATE	141-78-6	88.10	100	0.000128	0.00000966	0.0732
ETHYLBENZENE	100-41-4	106.20	10	0.00644	0.0000078	0.075
ETHYLENEOXIDE	75-21-8	44.00	1250	0.000142	0.0000145	0.104

Table 4.3-4 (Part 1) (cont.).

Chemical Name	CAS Number	Molecular Weight	Vapor Pressure At 25°C (mm Hg)	Henry's Law Constant At 25°C (atm·m^3/mol)	Diffusivity Of Chemical In Water At 25°C (cm^2/s)	Diffusivity Of Chemical In Air At 25°C (cm^2/s)
ETHYLETHER	60-29-7	74.10	520	0.00068	0.0000093	0.074
FORMALDEHYDE	50-00-0	30.00	3500	0.0000576	0.0000198	0.178
FORMIC ACID	64-18-6	46.00	42	0.0000007	0.00000137	0.079
FREONS	NOCAS3	120.92	5000	0.401	0.00001	0.104
FURAN	110-00-9	68.08	596	0.00534	0.0000122	0.104
FURFURAL	96-01-1	96.09	2	0.0000811	0.0000104	0.0872
HEPTANE (ISO)	142-82-5	100.21	66	1.836	0.00000711	0.187
HEXACHLOROBENZENE	118-74-1	284.80	1	0.00068	0.00000591	0.0542
HEXACHLOROBUTADIENE	87-68-3	260.80	0.15	0.0256	0.0000062	0.0561
HEXACHLOROCYCLOPENTADIENE	77-47-4	272.80	0.081	0.016	0.00000616	0.0561
HEXACHLOROETHANE	67-72-1	237.00	0.65	0.00000249	0.0000068	0.00249
HEXANE(-N)	100-54-3	86.20	150	0.122	0.00000777	0.2
HEXANOL(-1)	111-27-3	102.18	0.812	0.0000182	0.00000753	0.059
HYDROCYANIC ACID	74-90-8	27.00	726	0.000000465	0.0000182	0.197
HYDROFLUORIC ACID	7664-39-3	20.00	900	0.000237	0.000033	0.388
HYDROGEN SULFIDE	7783-06-4	34.10	15200	0.023	0.0000161	0.176
ISOPHORONE	78-59-1	138.21	0.439	0.00000576	0.00000676	0.0623
METHANOL	67-56-1	32.00	114	0.0000027	0.0000164	0.15
METHYL ACETATE	79-20-9	74.10	235	0.000102	0.00001	0.104
METHYL CHLORIDE	74-87-3	50.50	3830	0.00814	0.0000065	0.126

Table 4.3-4 (Part 1) (cont.).

Chemical Name	CAS Number	Molecular Weight	Vapor Pressure At 25°C (mm Hg)	Henry's Law Constant At 25°C (atm·m^3/mol)	Diffusivity Of Chemical In Water At 25°C (cm^2/s)	Diffusivity Of Chemical In Air At 25°C (cm^2/s)
METHYL ETHYL KETONE	78-93-3	72.10	100	0.0000435	0.0000098	0.0808
METHYL ISOBUTYL KETONE	108-10-1	100.20	15.7	0.0000495	0.0000078	0.075
METHYL METHACRYLATE	80-62-6	100.10	39	0.000066	0.0000086	0.077
METHYL STYRENE (ALPHA)	98-83-9	118.00	0.076	0.00591	0.0000114	0.264
METHYLENE CHLORIDE	75-09-2	85.00	438	0.00319	0.0000117	0.101
MORPHOLINE	110-91-8	87.12	10	0.0000573	0.0000096	0.091
NAPHTHALENE	91-20-3	128.20	0.23	0.00118	0.0000075	0.059
NITROANILINE(-O)	88-74-4	138.14	0.003	0.0000005	0.000008	0.073
NITROBENZENE	98-95-3	123.10	0.3	0.0000131	0.0000086	0.076
PENTACHLOROBENZENE	608-93-5	250.34	0.0046	0.0073	0.0000063	0.057
PENTACHLOROETHANE	76-01-7	202.30	4.4	0.021	0.0000073	0.066
PENTACHLOROPHENOL	87-86-5	266.40	0.00099	0.0000028	0.0000061	0.056
PHENOL	108-95-2	94.10	0.34	0.000000454	0.0000091	0.082
PHOSGENE	75-44-5	98.92	1390	0.171	0.00000112	0.108
PHTHALIC ACID	100-21-0	166.14	121	0.0132	0.0000068	0.064
PHTHALIC ANHYDRIDE	85-44-9	148.10	0.0015	0.0000009	0.0000086	0.071
PICOLINE(-2)	108-99-6	93.12	10.4	0.000127	0.0000096	0.075
POLYCHLORINATED BIPHENYLS	1336-36-3	290.00	0.00185	0.0004	0.00001	0.104
PROPANOL (ISO)	71-23-8	60.09	42.8	0.00015	0.0000104	0.098
PROPIONALDEHYDE	123-38-6	58.08	300	0.00115	0.0000114	0.102

Table 4.3-4 (Part 1) (cont.).

Chemical Name	CAS Number	Molecular Weight	Vapor Pressure At 25°C (mm Hg)	Henry's Law Constant At 25°C (atm·m^3/mol)	Diffusivity Of Chemical In Water At 25°C (cm^2/s)	Diffusivity Of Chemical In Air At 25°C (cm^2/s)
PROPYLENE GLYCOL	57-55-6	76.11	0.3	0.0000015	0.0000102	0.093
PROPYLENE OXIDE	75-66-9	58.10	525	0.00134	0.00001	0.104
PYRIDINE	110-86-1	79.10	20	0.0000236	0.0000076	0.091
RESORCINOL	108-46-3	110.11	0.00026	0.0000000188	0.0000087	0.078
STYRENE	100-42-5	104.20	7.3	0.00261	0.000008	0.071
TETRACHLOROETHANE(1,1,1,2)	630-20-6	167.85	6.5	0.002	0.0000079	0.071
TETRACHLOROETHANE(1,1,2,2)	79-34-5	167.85	6.5	0.00038	0.0000079	0.071
TETRACHLOROETHYLENE	127-18-4	165.83	19	0.029	0.0000082	0.072
TETRAHYDROFURAN	109-99-9	72.12	72.1	0.000049	0.0000105	0.098
TOLUENE	109-88-3	92.40	30	0.00668	0.0000086	0.087
TOLUENE DIISOCYANATE(2,4)	584-84-9	174.16	0.08	0.0000083	0.0000062	0.061
TRICHLORO(1,1,2)TRIFLUOROETHANE	76-13-1	187.38	300	0.435	0.0000082	0.078
TRICHLOROBENZENE(1,2,4)	120-82-1	181.50	0.18	0.00142	0.0000077	0.0676
TRICHLOROBUTANE(1,2,3)	NOCAS5	161.46	4.39	4.66	0.0000072	0.066
TRICHLOROETHANE(1,1,1)	71-55-6	133.40	123	0.00492	0.0000088	0.078
TRICHLOROETHANE(1,1,2)	79-00-5	133 40	25	0.000742	0.0000088	0.078
TRICHLOROETHYLENE	79-01-6	131.40	75	0.0091	0.0000091	0.079
TRICHLOROFLUOROMETHANE	75-69-4	137.40	796	0.0583	0.0000097	0.087
TRICHLOROPHENOL(2,4,6)	88-06-2	197.46	0.0073	0.0000177	0.0000075	0.0661
TRICHLOROPROPANE(1,1,1)	NOCAS6	147.43	3.1	0.029	0.0000079	0.071

Table 4.3-4 (Part 1) (cont.).

Chemical Name	CAS Number	Molecular Weight	Vapor Pressure At 25°C (mm Hg)	Henry's Law Constant At 25°C ($atm \cdot m^3/mol$)	Diffusivity Of Chemical In Water At 25°C (cm^2/s)	Diffusivity Of Chemical In Air At 25°C (cm^2/s)
TRICHLOROPROPANE(1,2,3)	96-18-4	147.43	3	0.028	0.0000079	0.071
UREA	57-13-6	60.06	6.69	0.000264	0.0000137	0.122
VINYL ACETATE	108-05-4	86.09	115	0.00062	0.0000092	0.085
VINYL CHLORIDE	75-01-4	62.50	2660	0.086	0.0000123	0.106
VINYLIDENE CHLORIDE	75-35-4	97.00	591	0.015	0.0000104	0.09
XYLENE(-M)	1330-20-7	106.17	8	0.0052	0.0000078	0.07
XYLENE(-O)	95-47-6	106.17	7	0.00527	0.00001	0.087

Table 4.3-4. SIMS CHEMICAL PROPERTY DATA FILE (PART 2)

Chemical Name	Antoine's Equation Vapor Pressure Coefficient A	Antoine's Equation Vapor Pressure Coefficient B	Antoine's Equation Vapor Pressure Coefficient C	Maximum Biodegradation Rate Constant (g/g Biomass-s)	Half Saturation Constant (g/m^3)	Octanol-Water Partition Coefficient At 25°C
ACETALDEHYDE	8.005	1600.017	291.809	0.0000228944	419.0542	2.69153
ACETIC ACID	7.387	1533.313	222.309	0.0000038889	14.2857	0.48978
ACETIC ANHYDRIDE	7.149	1444.718	199.817	0.0000026944	1.9323	1
ACETONE	7.117	1210.595	229.664	0.0000003611	1.1304	0.57544
ACETONITRILE	7.119	1314.4	230	0.00000425	152.6014	0.45709
ACROLEIN	2.39	0	0	0.0000021667	22.9412	0.81283
ACRYLAMIDE	11.2932	3939.877	273.16	0.00000425	56.2388	6.32182
ACRYLIC ACID	5.652	648.629	154.683	0.0000026944	54.7819	2.04174
ACRYLONITRILE	7.038	1232.53	222.47	0.000005	24	0.12023
ADIPIC ACID	0	0	0	0.0000026944	66.9943	1.20226
ALLYL ALCOHOL	0	0	0	0.0000048872	3.9241	1.47911
AMINOPHENOL(-O)	0	0	0	0.00000425	68.1356	3.81533
AMINOPHENOL(-P)	-3.357	699.157	-331.343	0.00000425	68.1356	3.81533
AMMONIA	7.5547	1002.711	247.885	0.00000425	15.3	1
AMYL ACETATE(-N)	0	0	0	0.0000026944	16.1142	51.10801
ANILINE	7.32	1731.515	206.049	0.0000019722	.3381	7.94328
BENZENE	6.905	1211.033	220.79	0.0000052778	13.5714	141.25375
BENZO(A)ANTHRACENE	6.9824	2426.6	156.6	0.0000086389	1.7006	407380.2778
BENZO(A)PYRENE	9.2455	3724.363	273.16	0.0000086389	1.2303	954992.58602

Table 4.3-4 (Part 2) (cont.).

Chemical Name	Antoine's Equation Vapor Pressure Coefficient A	Antoine's Equation Vapor Pressure Coefficient B	Antoine's Equation Vapor Pressure Coefficient C	Maximum Biodegradation Rate Constant (g/g Biomass-s)	Half Saturation Constant (g/m^3)	Octanol-Water Partition Coefficient At 25°C
BENZYL CHLORIDE	0	0	0	0.0000049306	17.5674	199.52623
BIS(2-CHLOROETHYL)ETHER	0	0	0	0.0000029889	20.0021	38.01894
BIS(2-CHLOROISOPROPYL)ETHER	0	0	0	0.0000029889	8.3382	380.1894
BIS(2-ETHYLHEXYL)PHTHALATE	0	0	0	0.0000002139	2.2	199526.2315
BROMOFORM	0	0	0	0.0000029889	10.653	199.52623
BROMOMETHANE	0	0	0	0.0000029889	30.4422	12.58925
BUTADIENE-(1,3)	6.849	930.546	238.854	0.0000042534	15.3	74.32347
BUTANOL (ISO)	7.4743	1314.19	186.55	0.0000021667	70.9091	5.62341
BUTANOL-(1)	7.4768	1362.39	178.77	0.0000021667	70.9091	5.62341
BUTYL BENZYL PHTHALATE	0	0	0	0.0000086389	14.1364	60255.95861
CARBON DISULFIDE	6.942	1169.11	241.59	0.0000042534	5.8175	1
CARBON TETRACHLORIDE	6.934	1242.43	230	0.0000004167	1	524.80746
CHLORO(-P)CRESOL(-M)	0	0	0	0.0000029889	5.2902	1258.92541
CHLOROACETALDEHYDE	0	0	0	0.0000029889	49.838	3.4405
CHLOROBENZENE	6.978	1431.05	217.55	0.0000001083	.039	316.22777
CHLOROFORM	6.493	929.44	196.03	0.0000008167	3.7215	91.20108
CHLORONAPHTHALENE-(2)	0	0	0	0.0000029889	2.167	13182.56739
CHLOROPRENE	6.161	783.45	179.7	0.0000029968	6.3412	1
CRESOL(-M)	7.508	1856.36	199.07	0.0000064472	1.3653	93.32543
CRESOL(-O)	6.911	1435.5	165.16	0.0000063278	1.34	95.49926

Table 4.3-4 (Part 2) (cont.).

Chemical Name	Antoine's Equation Vapor Pressure Coefficient A	Antoine's Equation Vapor Pressure Coefficient B	Antoine's Equation Vapor Pressure Coefficient C	Maximum Biodegradation Rate Constant (g/g Biomass-s)	Half Saturation Constant (g/m^3)	Octanol-Water Partition Coefficient At 25°C
CRESOL(-P)	7.035	1511.08	161.85	0.0000064472	1.3653	87.09636
CRESYLIC ACID	0	0	0	0.0000041667	15	1
CROTONALDEHYDE	0	0	0	0.0000026944	27.6285	12.36833
CUMENE (ISOPROPYLBENZENE)	6.963	1460.793	207.78	0.0000086458	16.5426	1
CYCLOHEXANE	6.841	1201.53	222.65	0.0000042534	15.3	338.0687
CYCLOHEXANOL	6.255	912.87	109.13	0.0000026944	18.0816	37.74314
CYCLOHEXANONE	7.8492	2137.192	273.16	0.0000031917	41.8921	6.45654
DI-N-OCTYL PHTHALATE	0	0	0	0.000000083	0.02	141253.7
DIBUTYLPHTHALATE	6.639	1744.2	113.59	0.0000001111	0.4	158489.31925
DICHLORO(-2)BUTENE(1,4)	0	0	0	0.0000029889	9.8973	242.1542
DICHLOROBENZENE(1,2) (-O)	.176	0	0	0.0000006944	4.3103	2398.83292
DICHLOROBENZENE(1,3) (-M)	0	0	0	0.0000017778	2.7826	2398.83292
DICHLOROBENZENE(1,4) (-P)	.079	0	0	0.0000017778	2.7826	2454.70892
DICHLORODIFLUOROMETHANE	0	0	0	0.0000029889	12.0413	144.54398
DICHLOROETHANE(1,1)	0	0	0	0.0000029889	4.6783	61.6595
DICHLOROETHANE(1,2)	7.025	1272.3	222.9	0.0000005833	2.1429	61.6595
DICHLOROETHYLENE(1,2)	6.965	1141.9	231.9	0.0000029889	6.3294	1
DICHLOROPHENOL(2,4)	0	0	0	0.0000069444	7.5758	562.34133
DICHLOROPHENOXYACETIC ACID(2,4)	0	0	0	0.0000029889	14.8934	82.61445

Table 4.3-4 (Part 2) (cont.).

Chemical Name	Antoine's Equation Vapor Pressure Coefficient A	Antoine's Equation Vapor Pressure Coefficient B	Antoine's Equation Vapor Pressure Coefficient C	Maximum Biodegradation Rate Constant (g/g Biomass-s)	Half Saturation Constant (g/m^3)	Octanol-Water Partition Coefficient At 25°C
DICHLOROPROPANE(1,2)	6.98	1380.1	22.8	0.0000047222	12.1429	1
DIETHYL (N,N) ANILIN	7.466	1993.57	218.5	0.00000425	27.0047	43.57596
DIETHYL PHTHALATE	0	0	0	0.000000753	1.28	1412.537
DIMETHYL FORMAMIDE	6.928	1400.87	196.43	0.00000425	15.3	1
DIMETHYL HYDRAZINE(1,1)	7.408	1305.91	225.53	0.00000425	15.3	1
DIMETHYL PHTHALATE	4.522	700.31	51.42	0.0000006111	0.7097	74.13102
DIMETHYLBENZ(A)ANTHRACENE	0	0	0	0.0000086389	0.3377	28680056.33087
DIMETHYLPHENOL(2,4)	0	0	0	0.0000029722	2.2766	263.0268
DINITROBENZENE (-M)	4.337	229.2	-137	0.00000425	29.9146	33.28818
DINITROTOLUENE(2,4)	5.798	1118	61.8	0.00000425	19.5233	102.3293
DIOXANE(1,4)	7.431	1554.68	240.34	0.0000026944	24.7001	16.60956
DIOXIN	12.88	6465.5	273	0.0000029968	6.3412	1
DIPHENYLAMINE	0	0	0	0.0000052778	8.4103	1659.58691
EPICHLOROHYDRIN	8.2294	2086.816	273.16	0.0000029968	6.3412	1.07152
ETHANOL	8.321	1718.21	237.52	0.0000024444	9.7778	0.47863
ETHANOLAMINE(MONO-)	7.456	1577.67	173.37	0.00000425	223.0321	0.16865
ETHYL ACRYLATE	7.9645	1897.011	273.16	0.0000026944	39.4119	4.85667
ETHYL CHLORIDE	6.986	1030.01	238.61	0.0000029889	22.8074	26.91535
ETHYL-(2)PROPYL-(3) ACROLEIN	0	0	0	0.00000425	15.3	1

Table 4.3-4 (Part 2) (cont.).

Chemical Name	Antoine's Equation Vapor Pressure Coefficient A	Antoine's Equation Vapor Pressure Coefficient B	Antoine's Equation Vapor Pressure Coefficient C	Maximum Biodegradation Rate Constant (g/g Biomass-s)	Half Saturation Constant (g/m^3)	Octanol-Water Partition Coefficient At 25°C
ETHYLACETATE	7.101	1244.95	217.88	0.0000048833	17.58	1
ETHYLBENZENE	6.975	1424.255	213.21	0.0000018889	3.2381	1412.53754
ETHYLENEOXIDE	7.128	1054.54	237.76	0.0000011667	4.6154	0.50003
ETHYLETHER	6.92	1064.07	228.8	0.0000026944	17.1206	43.57596
FORMALDEHYDE	7.195	970.6	244.1	0.0000013889	20	87.09636
FORMIC ACID	7.581	1699.2	260.7	0.0000026944	161.3977	0.1191
FREONS	0	0	0	0.0000029968	6.3412	1
FURAN	6.975	1060.87	227.74	0.0000026944	14.1936	71.37186
FURFURAL	6.575	1198.7	162.8	0.0000026944	18.0602	37.86047
HEPTANE (ISO)	6.8994	1331.53	212.41	0.0000042534	15.3	1453.372
HEXACHLOROBENZENE	0	0	0	0.0000029889	0.6651	295120.92267
HEXACHLOROBUTADIENE	0.824	0	0	0.000003	6.3412	5495.408
HEXACHLOROCYCLOPENTADIENE	0	0	0	0.0000029968	0.3412	9772.372
HEXACHLOROETHANE	0	0	0	0.0000029889	3.3876	4068.32838
HEXANE(-N)	6.876	1171.17	224.41	0.0000042534	15.3	534.0845
HEXANOL(-1)	7.86	1761.26	196.66	0.0000026944	15.2068	59.52851
HYDROCYANIC ACID	7.528	1329.5	260.4	0.0000026944	1.9323	1
HYDROFLUORIC ACID	7.217	1268.37	273.87	0.0000026944	1.9323	1
HYDROGEN SULFIDE	7.614	885.319	250.25	0.0000029889	6.3294	1
ISOPHORONE	0	0	0	0.00000425	25.6067	50.11872

Table 4.3-4 (Part 2) (cont.).

Chemical Name	Antoine's Equation Vapor Pressure Coefficient A	Antoine's Equation Vapor Pressure Coefficient B	Antoine's Equation Vapor Pressure Coefficient C	Maximum Biodegradation Rate Constant (g/g Biomass-s)	Half Saturation Constant (g/m^3)	Octanol-Water Partition Coefficient At 25°C
METHANOL	7.897	1474.08	229.13	0.000005	90	0.19953
METHYL ACETATE	7.065	1157.63	219.73	0.0000055194	159.2466	0.81283
METHYL CHLORIDE	7.093	948.58	249.34	0.0000029889	14.855	83.17638
METHYL ETHYL KETONE	6.9742	1209.6	216	0.0000005556	10	1.90546
METHYL ISOBUTYL KETONE	6.672	1168.4	191.9	0.0000002056	1.6383	23.98833
METHYL METHACRYLATE	8.409	2050.5	274.4	0.0000026944	109.2342	0.33221
METHYL STYRENE (ALPHA)	6.923	1486.88	202.4	0.000008639	11.12438	2907.589
METHYLENE CHLORIDE	7.409	1325.9	252.6	0.0000061111	54.5762	17.78279
MORPHOLINE	7.7181	1745.8	235	0.00000425	291.9847	0.08318
NAPHTHALENE	7.01	1733.71	201.86	0.0000117972	42.47	1
NITROANILINE(-O)	8.868	336.5	273.16	0.00000425	22.8535	67.6083
NITROBENZENE	7.115	1746.6	201.8	0.0000030556	4.7826	69.1831
PENTACHLOROBENZENE	0	0	0	0.0000029889	0.4307	925887.02902
PENTACHLOROETHANE	6.74	1378	197	0.0000029889	0.4307	925887.02902
PENTACHLOROPHENOL	0	0	0	0.0000361111	38.2353	102329.29923
PHENOL	7.133	1516.79	174.95	0.0000269444	7.4615	28.84032
PHOSGENE	6.842	941.25	230	0.00000425	70.8664	3.4405
PHTHALIC ACID	0	0	0	0.0000026944	34.983	6.64623
PHTHALIC ANHYDRIDE	8.022	2868.5	273.16	0.0000048872	3.9241	0.23988
PICOLINE(-2)	7.032	1415.73	211.63	0.00000425	44.8286	11.48154

Table 4.3-4 (Part 2) (cont.).

Chemical Name	Antoine's Equation Vapor Pressure Coefficient A	Antoine's Equation Vapor Pressure Coefficient B	Antoine's Equation Vapor Pressure Coefficient C	Maximum Biodegradation Rate Constant (g/g Biomass-s)	Half Saturation Constant (g/m^3)	Octanol-Water Partition Coefficient At 25°C
POLYCHLORINATED BIPHENYLS	0	0	0	0.000005278	20	1
PROPANOL (ISO)	8.117	1580.92	219.61	0.0000041667	200	0.69183
PROPIONALDEHYDE	16.2315	2659.02	-44.15	0.0000026944	39.2284	4.91668
PROPYLENE GLYCOL	8.2082	2085.9	203.5396	0.0000026944	109.3574	0.33141
PROPYLENE OXIDE	8.2768	1656.884	273.16	0.0000048872	3.9241	1
PYRIDINE	7.041	1373.8	214.98	0.0000097306	146.9139	4.46684
RESORCINOL	6.9243	1884.547	186.0596	0.0000026944	35.6809	6.30957
STYRENE	7.14	1574.51	224.09	0.0000086389	282.7273	1445.43977
TETRACHLOROETHANE(1,1,1,2)	6.898	1365.88	209.74	0.0000029889	6.3294	1
TETRACHLOROETHANE(1,1,2,2)	6.631	1228.1	179.9	0.0000017222	9.1176	363.07805
TETRACHLOROETHYLENE	6.98	1386.92	217.53	0.0000017222	9.1176	398.10717
TETRAHYDROFURAN	6.995	1202.29	226.25	0.0000026944	20.3702	27.58221
TOLUENE	6.954	1344.8	219.48	0.0000204111	30.6167	489.77882
TOLUENE DIISOCYANATE(2,4)	0	0	0	0.00000425	15.3	1
TRICHLORO(1,1,2)TRIFLUOROETHANE	6.88	1099.9	227.5	0.0000029889	3.3876	4068.32838
TRICHLOROBENZENE(1,2,4)	0	0	0	0.0000029889	2.4495	9549.92586
TRICHLOROBUTANE(1,2,3)	0	0	0	0.0000029968	6.3412	1450901.06626
TRICHLOROETHANE(1,1,1)	8.643	2136.6	302.8	0.0000009722	4.7297	309.02954
TRICHLOROETHANE(1,1,2)	6.951	1314.41	209.2	0.0000009722	4.7297	1

Table 4.3-4 (Part 2) (cont.).

Chemical Name	Antoine's Equation Vapor Pressure Coefficient A	Antoine's Equation Vapor Pressure Coefficient B	Antoine's Equation Vapor Pressure Coefficient C	Maximum Biodegradation Rate Constant (g/g Biomass)	Half Saturation Constant (g/m^3)	Octanol-Water Partition Coefficient At 25°C
TRICHLOROETHYLENE	6.518	1018.6	192.7	0.0000010833	4.4318	194.98446
TRICHLOROFLUOROMETHANE	6.884	1043.004	236.88	0.000003	6.3412	338.8441
TRICHLOROPHENOL(2,4,6)	0	0	0	0.00000425	58.8462	4897.78819
TRICHLOROPROPANE(1,1,1)	0	0	0	0.0000029889	10.7719	193.7827
TRICHLOROPROPANE(1,2,3)	6.903	788.2	243.23	0.0000029889	10.7719	193.7827
UREA	0	0	0	0.00000425	4.8169	4068.32838
VINYL ACETATE	7.21	1296.13	226.66	0.0000026944	31.8363	8.51722
VINYL CHLORIDE	3.425	0	0	0.000003	6.3412	1.14815
VINYLIDENE CHLORIDE	6.972	1099.4	237.2	0.0000029968	6.3412	1
XYLENE(-M)	7.009	1426.266	215.11	0.0000086389	14.0094	1584.89319
XYLENE(-O)	6.998	1474.679	213 69	0.0000113306	22.8569	891.25094

4.3.5 Waste Water—Greenhouse Gases

Greenhouse gases are emitted from both domestic and industrial waste water treatment operations. When biological processes such as suspended-growth and attached-growth units operate in anaerobic conditions with high biochemical oxygen demand (BOD) loading, the dominant greenhouse gas emitted is methane (CH_4), though lesser quantities of carbon dioxide (CO_2) and nitrous oxide (N_2O) may also be emitted. Methane generated from waste water treatment plants may also be collected and utilized as a source of energy, or flared. An anaerobic process is any treatment process that operates in the absence of oxygen. The chemical reactions that occur in anaerobic conditions are mitigated by biological activities, such that they are affected by many different factors (i.e., BOD loading, oxygen concentration, phosphorus and nitrogen levels, temperature, redox potential, and retention time) which may significantly impact emissions.

4.3.5.1 Domestic Waste Water Treatment Processes -

Publicly owned treatment works (POTWs) are treatment facilities that treat waste water from residences and businesses of a defined community. Aerobic treatment, which is rapid and relatively low in odor, is used by a majority of POTWs in the U.S. The most common aerobic treatment process is activated sludge, where raw waste water is mixed with a sludge of living aerobic microorganisms (the sludge is activated in a mechanically aerated tank). The microorganisms rapidly adsorb and biologically oxidize the organic solids suspended in the waste water, producing CO_2.[6] POTWs use a wide range of chemical and biological processes. A POTW usually consists of a number of aerobic, anaerobic, and physical processes.[7] Those facilities that use biological processes under anaerobic conditions with high BOD loading emit CH_4, and, to a lesser extent, N_2O and CO_2. None of the data currently available on N_2O and CO_2 emissions are useful for developing emission factors for this source. Emissions of CO_2 from this source as well as other biogenic sources are part of the carbon cycle, and as such are typically not included in greenhouse gas emission inventories. To estimate uncontrolled CH_4 emissions from a typical waste water treatment plant, the following equation can be used:

$$(P) * \left(\frac{\text{lb BOD}_5}{\text{capita/day}}\right) * \left(\frac{365 \text{ days}}{\text{yr}}\right) * \left(\frac{0.22 \text{ lb CH}_4}{\text{lb BOD}_5}\right) * \left(\begin{array}{c}\text{Fraction}\\ \text{Anaerobically}\\ \text{Digested}\end{array}\right) = \frac{\text{lb CH}_4}{\text{yr}} \qquad (1)$$

where:

P is the population of the community served by the POTW.

Note: To convert from lb CH_4/yr to kg CH_4/yr, multiply by 0.454.

BOD_5 is a standardized measurement for BOD. This 5-day BOD test is a measure of the "strength" of the waste water; waste water with a high BOD_5 is considered "strong." The BOD_5-CH_4 conversion (0.22 lb CH_4/lb BOD_5) is taken from Metcalf & Eddy[8] and Orlich.[9] The domestic BOD loading rate (lb BOD_5/capita/day) varies from one population group to the next, usually ranging from 0.10 to 0.17 lb, with a typical value of 0.13 lb BOD_5/capita/day.[10] To obtain the exact domestic BOD loading rate for a specific community, contact the local waste water treatment plant operator for that community. It has been hypothesized that emission factors based on chemical oxygen demand (COD) are more accurate than those based on BOD.[11] Research is currently being conducted by the U. S. EPA relevant to this hypothesis.

The fraction of the domestic waste water treated anaerobically is calculated by considering which treatment processes are anaerobic and what percent of the total hydraulic retention time the waste water spends in these treatment processes. This fraction is dependent on the treatment processes used and the operating conditions of a specific plant. This information can also be provided by contacting local waste water treatment plant operators. If treatment activity data are not available from local wastewater treatment plant operators, a default value of 15 percent of domestic water treated anaerobically may also be used.[12] A default value of 15 percent is also recommended in the Intergovernmental Panel on Climate Change (IPCC) *Greenhouse Gas Inventory Reference Manual.*[13]

If a BOD_5 value of 0.13 lb BOD_5 is assumed, the IPCC assumption is used that 15 percent of waste water is anaerobically digested, and none of the gas is recovered for energy or flared, then equation 1 reduces to the following equation:

$$(P) * \left(1.56 \frac{\text{lb } CH_4}{\text{capita/yr}}\right) = \text{lb } \frac{CH_4}{\text{yr}} \qquad (2)$$

4.3.5.2 Industrial Waste Water Treatment Processes -

An industrial waste water system uses unit processes similar to those found in POTWs. Such a treatment system may discharge into a water body or may pretreat the waste water for discharge into a sewer system leading to a POTW. To estimate uncontrolled CH_4 methane emissions from a typical industrial waste water treatment plant the following equation can be used:

$$(Q_I) * \left(\frac{\text{lb } BOD_5}{\text{ft}^3 \text{ wastewater}}\right) * \left(\frac{0.22 \text{ lb } CH_4}{\text{lb } BOD_5}\right) * \left(\begin{array}{c}\text{Fraction}\\ \text{Anaerobically}\\ \text{Digested}\end{array}\right) * \left(365 \frac{\text{days}}{\text{yr}}\right) = \frac{\text{lb } CH_4}{\text{yr}} \qquad (3)$$

where:

Q_I = daily waste water flow (ft^3/day).

Flow rates for individual industrial waste water treatment facilities (Q_I) can be provided by the operator of the industrial waste water treatment plant or by reviewing a facility's National Pollution Discharge Elimination System (NPDES) discharge permit.

Industrial BOD loading rates (lb BOD_5/ft^3 waste water) vary depending upon the source of the waste water contamination. Some contaminants have very high BOD_5, such as contaminants in food and beverage manufacturers' waste water. Table 4.3-5 provides a list of typical industrial BOD loading rates for major industrial sources. To obtain the exact BOD loading rate for a specific facility, contact the facility's waste water treatment plant operator or review the facility's NPDES discharge permit.

The fraction of the industrial waste water treated anaerobically is dependent on the treatment processes used in specific plants. The composition of an industrial waste stream is more diverse than municipal wastewater. The difference makes it very difficult to provide a default fraction of anaerobically treated wastewater that would be representative of facilities in a specific inventory area. This information can also be provided by contacting individual waste water treatment plant operators.

4.3.5.3 Controls

Waste water treatment plant operators (domestic as well as industrial) can also provide information on gas recovery and utilization. If a gas recovery system is in place, uncontrolled CH_4 emissions estimates should be adjusted based on operator estimates of the efficiency of the gas collection system and the destruction of the collected gas. For more information on control efficiencies, see Section 4.3.3.

4.3.6 Updates Since the Fifth Edition

The Fifth Edition was released in January 1995. In February 1998, this section was revised by the addition of 4.3.5 which addresses Greenhouse Gas emissions. The revisions made in February 1998 are to be included in Supplement D.

Table 4.3-5. BIOCHEMICAL OXYGEN DEMAND (BOD) ESTIMATES FOR VARIOUS INDUSTRIAL WASTE WATERS

Industry	BOD_5 (lb/ft^3)[a]	Reference Number	Range
Fertilizer	0.04	14	0.03-0.05[b]
Food and beverages			
Beer	5.31	15	4.99-5.62[c]
Beet sugar	0.41	15, 16	0.34-0.47[c]
Butter	0.19	17	
Cane sugar	0.08	15	0.07-0.09[c]
Cereals	0.06	18	
Cheese	1.9	17	
Fruits and vegetables[d]	40.27	15	Average of BOD values for processing 35 different fruits an vegetables. The BOD values ranged from 4.370 to 1747.979 lbs/ft^3. For the BOD_5 value it was assumed that biodegradation was high such that the BOD_5 value was considered to be 75% of the BOD value.
Meats	1.3	19	--
Milk	7.6	15	6.24-8.93[c]
Wine	8.43	15	7.49-9.36[c]
Iron and steel	0.04	14	0.03-0.05[b]
Non-ferrous metals	0.04	14	0.03-0.05[b]
Petroleum refining (Petrochemical)	0.25	14	Average of values reported in Carmichael and Strzepek (1987).
Pharmaceutical	0.08	14	0.07-0.09[c]
Pulp and paper	0.17	14, 20	0.14-0.19
Rubber	0.04	14	0.03-0.05[b]
Textiles	0.04	14	0.03-0.05[c]

[a] To convert lb/ft^3 to kg/m^3 multiply by 16.0185.

[b] A BOD_5 value was not provided in the literature. The range of BOD_5 values was derived from the ultimate BOD value from the textile industry, which should have a similar, relatively small value. BOD_5 is 55 to 75 percent of ultimate BOD, depending on the biodegradability of the waste stream. The midpoint of the extrapolated range is presented in the second column as BOD_5.

[c] A range of values is given for BOD_5 because a specific BOD_5 value was not provided in the literature. The range of BOD_5 values was derived from the ultimate BOD value from the literature. BOD_5 is 55 to 75 percent of ultimate BOD, depending on the biodegradability of the waste stream. If the waste stream contains a large amount of material that does not biodegrade easily, then a value closer to the lower value should be used. If the waste stream contains a large amount of material that does biodegrade easily, then a value closer to the higher value should be used. If it is unclear how biodegradable the material is, and BOD_5 data for a specific facility is not available, then a value at the midpoint of the range should be used. The midpoint of the range is presented in the second column as BOD_5.

[d] For a more complete list of BOD_5 values see reference 15.

References For Section 4.3

1. *Hazardous Waste Treatment, Storage, And Disposal Facilities (TSDF) — Air Emission Models*, EPA-450/3-87-026, U. S. Environmental Protection Agency, Research Triangle Park, NC, April 1989.

2. *Waste Water Treatment Compound Property Processor Air Emissions Estimator (WATER 7)*, U. S. Environmental Protection Agency, Research Triangle Park, NC, available early 1992.

3. *Evaluation Of Test Method For Measuring Biodegradation Rates Of Volatile Organics*, Draft, EPA Contract No. 68-D90055, Entropy Environmental, Research Triangle Park, NC, September 1989.

4. *Industrial Waste Water Volatile Organic Compound Emissions — Background Information For BACT/LAER Determinations*, EPA-450/3-90-004, U. S. Environmental Protection Agency, Research Triangle Park, NC, January 1990.

5. Evan K. Nyer, *Ground Water Treatment Technology*, Van Nostrand Reinhold Company, New York, 1985.

6. J. Mangino and L. Sutton. Evaluation of Greenhouse Gas Emissions From Wastewater Treatment Systems. Contract No. 68-D1-0117, Work Assignment 22, U. S. Environmental Protection Agency, Office of Research and Development, Air and Energy Engineering Research Laboratory, Research Triangle Park, NC. April 1992.

7. L.C. Huff. Wastewater Methane Emission Estimates--Report to Congress. Contract No. 68-D1-0117. U. S. Environmental Protection Agency, Office of Research and Development, Air and Energy Engineering Research Laboratory, Research Triangle Park, NC. July 1992.

8. Metcalf & Eddy, Inc., *Waste Water Engineering: Treatment, Disposal, And Reuse*, McGraw-Hill Book Company, p. 621, 1979.

9. Dr. J. Orlich, "Methane Emissions From Landfill Sites And Waste Water Lagoons", Presented in *Methane Emissions And Opportunities For Control*, 1990.

10. Viessman, Jr. and M.J. Hammer. 1985. *Water Supply And Pollution Control.* Harper & Row Publishers, New York, NY.

11. U. S. Environmental Protection Agency. *International Anthropogenic Methane Emissions Report to Congress.* Office of Policy Planning and Evaluation, EPA 230-R-93-010. 1994.

12. M.J. Lexmond and G. Zeeman. *Potential Of Uncontrolled Anaerobic Wastewater Treatment In Order To Reduce Global Emissions Of The Greenhouse Gases Methane And Carbon Dioxide.*

Department of Environmental Technology, Agricultural University of Wageningen, the Netherlands. Report Number 95-1. 1995.

13. Intergovernmental Panel on Climate Control, *Greenhouse Gas Inventory Reference Manual*, Vol. 3, IPCC/OECD, p. 6.28, 1994.

14. J. B. Carmichael and K.M. Strzepek, *Industrial Water Use And Treatment Practices*, United Nations Industrial Development Organization, Cassell Tycooly, Philadelphia, PA, pp. 33, 36, 49, 67 and 85, 1987.

15. D. Barnes, *et al.*, "Surveys In Industrial Waste Water Treatment", Vol. 1, *Food And Allied Industries*, Pitman Publishing Inc., Marshfield, Massachusetts, pp. 12, 73, 213 and 316, 1984.

16. *Development Document For Effluent Limitations Guidelines And New Source Performance Standards For The Beet Sugar Processing Subcategory Of The Sugar Processing Point Source Category*, EPA 40/1-74/002b, U. S. Environmental Protection Agency, Effluent Guidelines Division, Office Of Waste And Hazardous Materials, Washington, DC, January 1974.

17. *Development Document For Effluent Limitations Guidelines And New Source Performance Standards For The Dairy Product Processing Point Source Category*, EPA 440/1-74/021a, U. S. Environmental Protection Agency, Effluent Guidelines Division, Office Of Waste And Hazardous Materials, Washington, DC, p. 59, May 1974.

18. *Development Document For Effluent Limitations Guidelines And New Source Performance Standards For The Animal Feed, Breakfast Cereal, And Wheat Starch Segments Of The Grain Mills Points Source Category*, EPA 440/1-74/039a, U. S. Environmental Protection Agency, Effluent Guidelines Division, Office Of Waste And Hazardous Materials, Washington, DC, pp. 39-40, December 1974.

19. *Development Document For Effluent Limitations Guidelines And New Source Performance Standards For The Rendering Segment Of The Meat Products And Rendering Processing Point Source Category*, EPA 400/1-4/031d, U. S. Environmental Protection Agency, Effluent Guidelines Division, Office of Waste And Hazardous Materials, Washington, DC, pp. 58, 60, January 1975.

20. E. R. Hall (editor), "Anaerobic Treatment For Pulp And Paper Waste Waters", *Anaerobic Treatment Of Industrial Waste Water*, Noyes Data Corporation, Park Ridge, New Jersey pp. 15-22, 1988.

4.4 Polyester Resin Plastic Products Fabrication

4.4.1 General Description[1-2]

A growing number of products are fabricated from liquid polyester resin reinforced with glass fibers and extended with various inorganic filler materials such as calcium carbonate, talc, mica, or small glass spheres. These composite materials are often referred to as fiberglass-reinforced plastic (FRP), or simply "fiberglass". The Society Of The Plastics industry designates these materials as "reinforced plastics/composites" (RP/C). Also, advanced reinforced plastics products are now formulated with fibers other than glass, such as carbon, aramid, and aramid/carbon hybrids. In some processes, resin products are fabricated without fibers. One major product using resins with fillers but no reinforcing fibers is the synthetic marble used in manufacturing bathroom countertops, sinks, and related items. Other applications of nonreinforced resin plastics include automobile body filler, bowling balls, and coatings.

Fiber-reinforced plastics products have a wide range of application in industry, transportation, home, and recreation. Industrial uses include storage tanks, skylights, electrical equipment, ducting, pipes, machine components, and corrosion resistant structural and process equipment. In transportation, automobile and aircraft applications are increasing rapidly. Home and recreational items include bathroom tubs and showers, boats (building and repair), surfboards and skis, helmets, swimming pools and hot tubs, and a variety of sporting goods.

The thermosetting polyester resins considered here are complex polymers resulting from the cross-linking reaction of a liquid unsaturated polyester with a vinyl type monomer, list often styrene. The unsaturated polyester is formed from the condensation reaction of an unsaturated dibasic acid or anhydride, a saturated dibasic acid or anhydride, and a polyfunctional alcohol. Table 4.4-1 lists the most common compounds used for each component of the polyester "backbone", as well as the principal cross-linking monomers. The chemical reactions that form both the unsaturated polyester and the cross-linked polyester resin are shown in Figure 4.4-1. The emission factors presented here apply to fabrication processes that use the finished liquid resins (as received by fabricators from chemical manufacturers), and not to the chemical processes used to produce these resins. (See Chapter 6, Organic Chemical Process Industry.)

In order to be used in the fabrication of products, the liquid resin must be mixed with a catalyst to initiate polymerization into a solid thermoset. Catalyst concentrations generally range from 1 to 2 percent by original weight of resin; within certain limits, the higher the catalyst concentration, the faster the cross-linking reaction proceeds. Common catalysts are organic peroxides, typically methyl ethyl ketone peroxide or benzoyl peroxide. Resins may contain inhibitors, to avoid self-curing during resin storage, and promoters, to allow polymerization to occur at lower temperatures.

The polyester resin/fiberglass industry consists of many small facilities (such as boat repair and small contract firms) and relatively few large firms that consume the major fraction of the total resin. Resin usage at these operations ranges from less than 5,000 kilograms per year (11,000 pounds) to over 3 million kilograms (6.6 million pounds) per year.

Reinforced plastics products are fabricated using any of several processes, depending on their size, shape, and other desired physical characteristics. The principal processes include hand layup,

Table 4.4-1. TYPICAL COMPONENTS OF RESINS

To Form The Unsaturated Polyester		
Unsaturated Acids	Saturated Acids	Polyfunctional Alcohols
Maleic anhydride Fumaric acid	Phthalic anhydride Isophthalic acid Adipic acid	Propylene glycol Ethylene glycol Diethylene glycol Dipropylene glycol Neopentyl glycol Pentaerythritol
Cross-Linking Agents (Monomers)		
Styrene Methyl methacrylate Vinyl toluene Vinyl acetate Diallyl phthalate Acrylamide 2-Ethyl hexylacrylate		

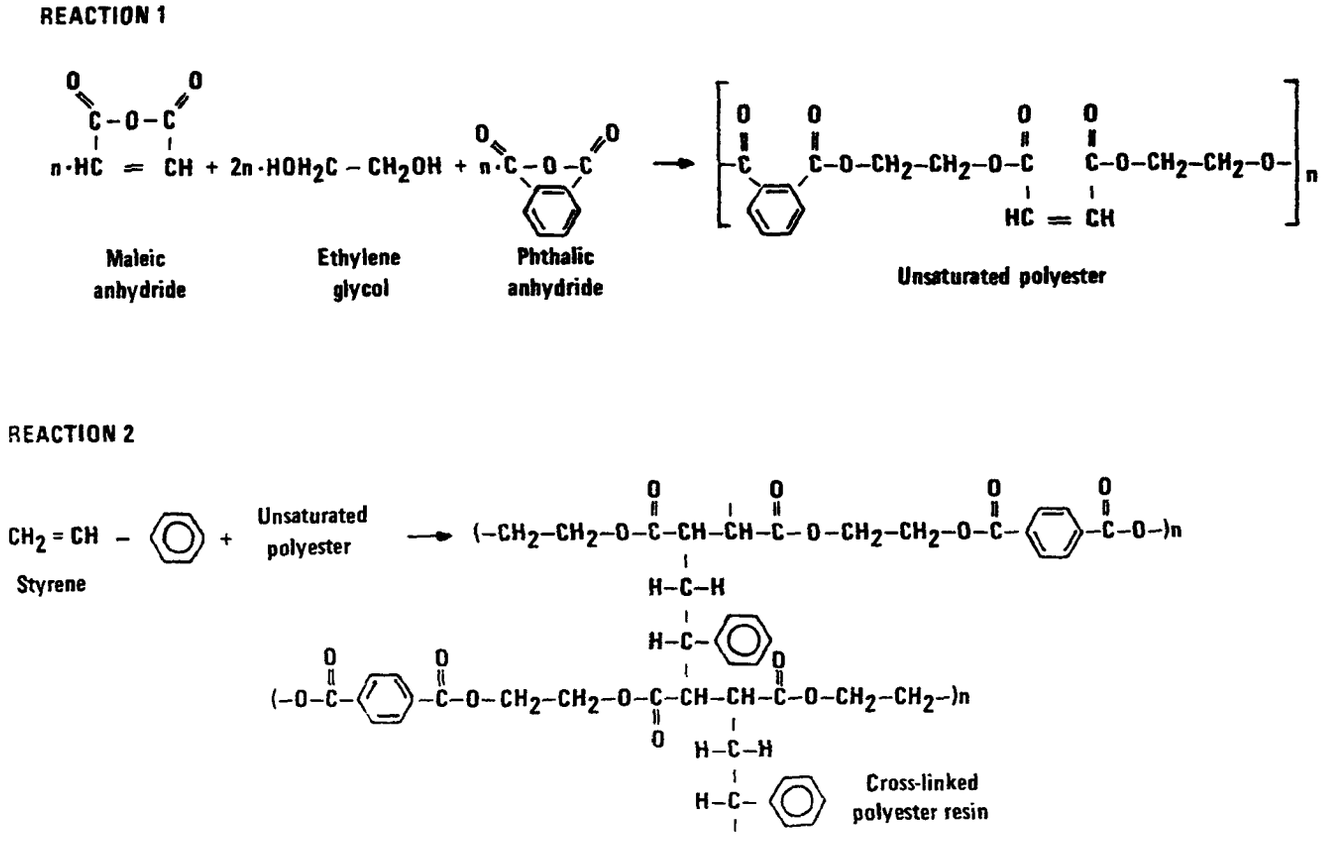

Figure 4.4-1. Typical reactions for unsaturated polyester and polyester resin formation.

spray layup (sprayup), continuous lamination, pultrusion, filament winding, and various closed molding operations.

Hand layup, using primarily manual techniques combined with open molds, is the simplest of the fabrication processes. Here, the reinforcement is manually fitted to a mold wetted with catalyzed resin mix, after which it is saturated with more resin. The reinforcement is in the form of either a chopped strand mat, a woven fabric, or often both. Layers of reinforcement and resin are added to build the desired laminate thickness. Squeegees, brushes, and rollers are used to smooth and compact each layer as it is applied. A release agent is usually first applied to the mold to facilitate removal of the composite. This is often a wax, which can be treated with a water soluble barrier coat such as polyvinyl alcohol to promote paint adhesion on parts that are to be painted. In many operations, the mold is first sprayed with gel coat, a clear or pigmented resin mix that forms the smooth outer surface of many products. Gel coat spray systems consist of separate sources of resin and catalyst, with an airless hand spray gun that mixes them together into an atomized resin/catalyst stream. Typical products are boat hulls and decks, swimming pools, bathtubs and showers, electrical consoles, and automobile components.

Spray layup, or "sprayup", is another open mold process, differing from hand layup in that it uses mechanical spraying and chopping equipment for depositing the resin and glass reinforcement. This process allows a greater production rate and more uniform parts than does hand layup, and often uses more complex molds. As in hand layup, gel coat is frequently applied to the mold before fabrication to produce the desired surface qualities. It is common practice to combine hand layup and sprayup operations.

For the reinforced layers, a device is attached to the sprayer system to chop glass fiber "roving" (uncut fiber) into predetermined lengths and project it to merge with the resin mix stream. The stream precoats the chop, and both are deposited simultaneously to the desired layer thickness on the mold surface (or on the gel coat that was applied to the mold). Layers are built up and rolled out on the mold as necessary to form the part. Products manufactured by sprayup are similar to those made by hand layup, except that more uniform and complex parts can generally be produced more efficiently with sprayup techniques. However, compared to hand layup, more resin generally is used to produce similar parts by spray layup because of the inevitable overspray of resin during application.

Continuous lamination of reinforced plastics materials involves impregnating various reinforcements with resins on an in-line conveyor. The resulting laminate is cured and trimmed as it passes through the various conveyor zones. In this process, the resin mix is metered onto a bottom carrier film, using a blade to control thickness. This film, which defines the panel's surface, is generally polyester, cellophane, or nylon and may have a smooth, embossed, or matte surface. Methyl methacrylate is sometimes used as the cross-linking agent, either alone or in combination with styrene, to increase strength and weather resistance. Chopped glass fibers free-fall into the resin mix and are allowed to saturate with resin, or "wet out". A second carrier film is applied on top of the panel before subsequent forming and curing. The cured panel is then stripped of its films, trimmed, and cut to the desired length. Principal products include translucent industrial skylights and greenhouse panels, wall and ceiling liners for food areas, garage doors, and cooling tower louvers. Figure 4.4-2 shows the basic elements of a continuous laminating production line.

Pultrusion, which can be thought of as extrusion by pulling, is used to produce continuous cross-sectional lineals similar to those made by extruding metals such as aluminum. Reinforcing fibers are pulled through a liquid resin mix bath and into a long machined steel die, where heat initiates an exothermic reaction to polymerize the thermosetting resin matrix. The composite profile

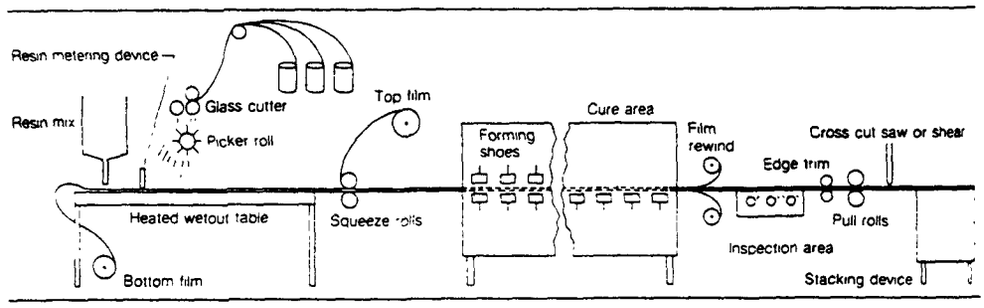

Figure 4.4-2. Typical continuous lamination production process.[2]

emerges from the die as a hot, constant cross-sectional that cools sufficiently to be fed into a clamping and pulling mechanism. The product can then be cut to desired lengths. Example products include electrical insulation materials, ladders, walkway gratings, structural supports, and rods and antennas.

Filament winding is the process of laying a band of resin impregnated fibers onto a rotating mandrel surface in a precise geometric pattern, and curing them to form the product. This is an efficient method of producing cylindrical parts with optimum strength characteristics suited to the specific design and application. Glass fiber is most often used for the filament, but aramid, graphite, and sometimes boron and various metal wires may be used. The filament can be wetted during fabrication, or previously impregnated filament ("prepreg") can be used. Figure 4.4-3 shows the filament winding process, and indicates the 3 most common winding patterns. The process illustration depicts circumferential winding, while the 2 smaller pictures show helical and polar winding. The various winding patterns can be used alone or in combination to achieve the desired strength and shape characteristics. Mandrels are made of a wide variety of materials and, in some applications, remain inside the finished product as a liner or core. Example products are storage tanks, fuselages, wind turbine and helicopter blades, and tubing and pipe.

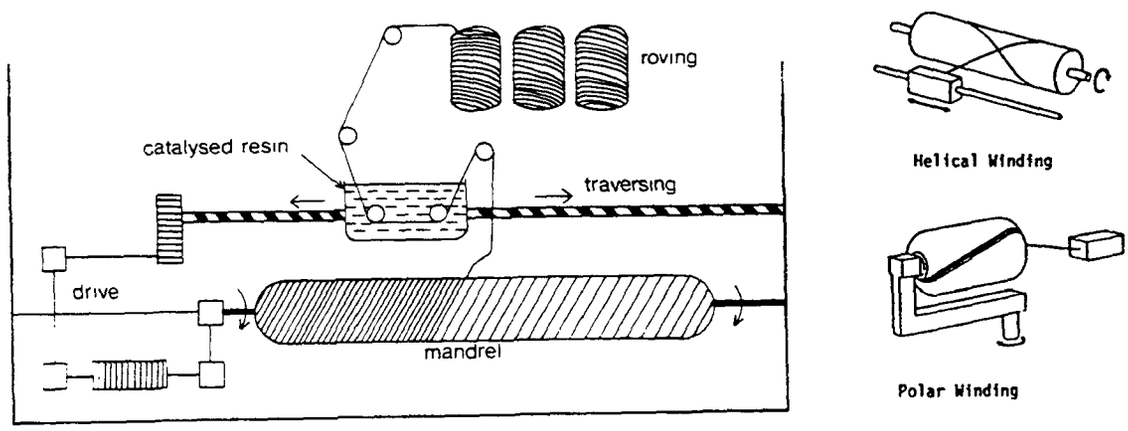

Figure 4.4-3. Typical filament winding process.[3]

Closed, such as compression or injection, molding operations involve the use of 2 matched dies to define the entire outer surface of the part. When closed and filled with a resin mix, the matched die mold is subjected to heat and pressure to cure the plastic. For the most durable production configuration, hardened metal dies are used (matched metal molding). Another closed

molding process is vacuum or pressure bag molding. In bag molding, a hand layup or sprayup is covered with a plastic film, and vacuum or pressure is applied to rigidly define the part and improve surface quality. The range of closed molded parts includes tool and appliance housings, cookware, brackets and other small parts, and automobile body and electrical components.

Synthetic marble casting, a large segment of the resin products industry, involves production of bathroom sinks, vanity tops, bathtubs, and accessories using filled resins that have the look of natural marble. No reinforcing fibers are used in these products. Pigmented or clear gel coat can either be applied to the mold itself or sprayed onto the product after casting to simulate the look of natural polished marble. Marble casting can be an open mold process, or it may be considered a semiclosed process if cast parts are removed from a closed mold for subsequent gel coat spraying.

4.4.2 Emissions And Controls

Organic vapors consisting of volatile organic compounds (VOC) are emitted from fresh resin surfaces during the fabrication process, and from the use of solvents (usually acetone) for cleanup of hands, tools, molds, and spraying equipment. Cleaning solvent emissions can account for over 36 percent of the total plant VOC emissions.[4] There also may be some release of particulate emissions from automatic fiber chopping equipment, but these emissions have not been quantified.

Organic vapor emissions from polyester resin/fiberglass fabrication processes occur when the cross-linking agent (anomer) contained in the liquid resin evaporates into the air during resin application and curing. Styrene, methyl methacrylate, and vinyl toluene are 3 of the principal monomers used as cross-linking agents. Styrene is by far the most common. Other chemical components of resins are emitted only at trace levels because they not only have low vapor pressures, but also are substantially converted to polymers.[5-6]

Since emissions result from evaporation of monomer from the uncured resin, they depend upon the amount of resin surface exposed to the air and the time of exposure. Thus, the potential for emissions varies with the manner in which the resin is mixed, applied, handled, and cured. These factors vary among the different fabrication processes. For example, the spray layup process has the highest potential for VOC emissions because the atomization of resin into a spray creates an extremely large surface area from which volatile monomer can evaporate. By contrast, the emission potential in synthetic marble casting and closed molding operations is considerably lower because of the lower anomer content in the casting resins (30 to 38 percent, versus about 43 percent) and the enclosed nature of these molding operations. It has been found that styrene evaporation increases with increasing gel time, wind speed, and ambient temperature, and that increasing the hand rolling time on a hand layup or sprayup results in significantly higher styrene losses.[1] Thus, production changes that lessen the exposure of fresh resin surfaces to the air should be effective in reducing these evaporation losses.

In addition to production changes, resin formulation can be varied to affect the VOC emission potential. In general, a resin with lower monomer content should produce lower emissions. Evaluation tests with low-styrene emission laminating resins having a 36-percent styrene content found a 60- to 70-percent decrease in emission levels, compared to conventional resins (43 percent styrene), with no sacrifice in the physical properties of the laminate.[7] Vapor suppressing agents also are sometimes added to resins to reduce VOC emissions. Most vapor suppressants are paraffin waxes, stearates, or polymers of proprietary composition, constituting up to several weight percent of the mix. Limited laboratory and field data indicate that vapor suppressing resins reduce styrene losses by 30 to 70 percent.[7-8]

Emission factors for several fabrication processes using styrene content resins have been developed from the results of facility source tests (B Rating) and laboratory tests (C Rating), and through technology transfer estimations (D Rating).[1] Industry experts also provided additional information that was used to arrive at the final factors presented in Table 4.4-2.[6] Since the styrene content varies over a range of approximately 30 to 50 weight percent, these factors are based on the quantity of styrene monomer used in the process, rather than on the total amount of resin used. The factors for vapor-suppressed resins are typically 30 to 70 percent of those for regular resins. The factors are expressed as ranges because of the observed variability in source and laboratory test results and of the apparent sensitivity of emissions to process parameters.

Emissions should be calculated using actual resin monomer contents. When specific information about the percentage of styrene is unavailable, the representative average values in Table 4.4-3 should be used. The sample calculation illustrates the application of the emission factors.

Sample Calculation -

A fiberglass boat building facility consumes an average of 250 kg per day of styrene-containing resins using a combination of hand layup (75%) and spray layup (25%) techniques. The laminating resins for hand and spray layup contain 41.0 and 42.5 weight percent, respectively, of styrene. The resin used for hand layup contains a vapor-suppressing agent.

From Table 4.4-2 the weight percent of monomer emitted for hand layup using a vapor-suppressed resin is 2 - 7 (0.02 to 0.07 fraction of total styrene emitted); the factor for spray layup is 9 - 13 (0.09 to 0.13 fraction emitted). Assume the midpoints of these emission factor ranges (0.045 and 0.11, respectively).

Total VOC emissions are:

$$(250 \text{ kg/day})\ [(0.75)(0.410)(0.045) + (0.25)(0.425)(0.11)] = 6.4 \text{ kg/day}.$$

Emissions from use of gel coat would be calculated in the same manner. If the monomer content of the resins were unknown, a representative value of 43 percent could be selected from Table 4.4-3 for this process combination. It should be noted that these emissions represent evaporation of styrene monomer only, and not of acetone or other solvents used for cleanup.

In addition to process changes and materials substitution, add-on control equipment can be used to reduce vapor emissions from styrene resins. However, control equipment is infrequently used at RP/C fabrication facilities, due to low exhaust VOC concentrations and the potential for contamination of adsorbent materials. Most plants use forced ventilation techniques to reduce worker exposure to styrene vapors, but vent the vapors directly to the atmosphere with no attempt at collection. At 1 continuous lamination facility where incineration was applied to vapors vented from the impregnation table, a 98.6 percent control efficiency was measured.[1] Carbon adsorption, absorption, and condensation have also been considered for recovering styrene and other organic vapors, but these techniques have not been applied to any significant extent in this industry.

Emissions from cleanup solvents can be controlled through good housekeeping and use practices, reclamation of spent solvent, and substitution with water-based solvent substitutes.

Table 4.4-2. EMISSION FACTORS FOR UNCONTROLLED POLYESTER RESIN PRODUCT FABRICATION PROCESSES[a]

(weight % of starting monomer emitted)

Process	Resin		EMISSION FACTOR RATING	Gel Coat		EMISSION FACTOR RATING
	NVS	VS[b]		NVS	VS[b]	
Hand layup	5 - 10	2 - 7	C	26 - 35	8 - 25	D
Spray layup	9 - 13	3 - 9	B	26 - 35	8 - 25	B
Continuous lamination	4 - 7	1 - 5	B	—[c]	—[c]	—
Pultrusion[d]	4 - 7	1 - 5	D	—[c]	—[c]	—
Filament winding[e]	5 - 10	2 - 7	D	—[c]	—[c]	—
Marble casting	1 - 3	1 - 2	B	—[f]	—[f]	—
Closed molding[g]	1 - 3	1 - 2	D	—[c]	—[c]	—

[a] Reference 9. Ranges represent the variability of processes and sensitivity of emissions to process parameters. Single value factors should be selected with caution. NVS = nonvapor-suppressed resin. VS = vapor-suppressed resin.
[b] Factors are 30 - 70% of those for nonvapor-suppressed resins.
[c] Gel coat is not normally used in this process.
[d] Resin factors for the continuous lamination process are assumed to apply.
[e] Resin factors for the hand layup process are assumed to apply.
[f] Factors unavailable. However, when cast parts are subsequently sprayed with gel coat, hand and spray layup gel coat factors are assumed to apply.
[g] Resin factors for marble casting, a semiclosed process, are assumed to apply.

Table 4.4-3. TYPICAL RESIN STYRENE PERCENTAGES

Resin Application	Resin Styrene Content[a] (wt. %)
Hand layup	43
Spray layup	43
Continuous lamination	40
Filament winding	40
Marble casting	32
Closed molding	35
Gel coat	35

[a] May vary by at least ±5 percentage points.

References For Section 4.4

1. M. B. Rogozen, *Control Techniques For Organic Gas Emissions From Fiberglass Impregnation And Fabrication Processes*, ARB/R-82/165, California Air Resources Board, Sacramento, CA, (NTIS PB82-251109), June 1982.

2. *Modern Plastics Encyclopedia, 1986-1987, 63*(10A), October 1986.

3. C. A. Brighton, *et al.*, *Styrene Polymers: Technology And Environmental Aspects*, Applied Science Publishers, Ltd., London, 1979.

4. M. Elsherif, *Staff Report, Proposed Rule 1162 — Polyester Resin Operations*, South Coast Air Quality Management District, Rule Development Division, El Monte, CA, January 23, 1987.

5. M. S. Crandall, *Extent Of Exposure To Styrene In The Reinforced Plastic Boat Making Industry*, Publication No. 82-110, National Institute For Occupational Safety And Health, Cincinnati, OH, March 1982.

6. Written communication from R. C. Lepple, Aristech Chemical Corporation, Polyester Unit, Linden, NJ, to A. A. MacQueen, U. S. Environmental Protection Agency, Research Triangle Park, NC, September 16, 1987.

7. L. Walewski and S. Stockton, "Low-Styrene-Emission Laminating Resins Prove It In The Workplace", *Modern Plastics, 62*(8):78-80, August 1985.

8. M. J. Duffy, "Styrene Emissions — How Effective Are Suppressed Polyester Resins?", Ashland Chemical Company, Dublin, OH, presented at 34th Annual Technical Conference, Reinforced Plastics/Composites Institute, The Society Of The Plastics Industry, 1979.

9. G. A. LaFlam, *Emission Factor Documentation For AP-42 Section 4.12: Polyester Resin Plastics Product Fabrication*, Pacific Environmental Services, Inc., Durham, NC, November 1987.

4.5 Asphalt Paving Operations

4.5.1 General[1-3]

Asphalt surfaces and pavements are composed of compacted aggregate and an asphalt binder. Aggregate materials are produced from rock quarries as manufactured stone or are obtained from natural gravel or soil deposits. Metal ore refining processes produce artificial aggregates as a byproduct. In asphalt, the aggregate performs 3 functions: it transmits the load from the surface to the base course, takes the abrasive wear of traffic, and provides a nonskid surface. The asphalt binder holds the aggregate together, preventing displacement and loss of aggregate and providing a waterproof cover for the base.

Asphalt binders take the form of asphalt cement (the residue of the distillation of crude oils), and liquified asphalts. To be used for pavement, asphalt cement, which is semisolid, must be heated prior to mixing with aggregate. The resulting hot mix asphalt concrete is generally applied in thicknesses of from 5 to 15 centimeters (2 to 6 inches). Liquified asphalts are: (1) asphalt cutbacks (asphalt cement thinned or "cutback" with volatile petroleum distillates such as naptha, kerosene, etc.) and (2) asphalt emulsions (nonflammable liquids produced by combining asphalt and water with an emulsifying agent, such as soap). Liquified asphalts are used in tack and seal operations, in priming roadbeds for hot mix application, and for paving operations up to several inches thick.

Cutback asphalts fall into 3 broad categories: rapid cure (RC), medium cure (MC), and slow cure (SC) road oils. SC, MC, and RC cutbacks are prepared by blending asphalt cement with heavy residual oils, kerosene-type solvents, or naptha and gasoline solvents, respectively. Depending on the viscosity desired, the proportions of solvent added generally range from 25 to 45 percent by volume.

Emulsified asphalts are of 2 basic types: 1 type relies on water evaporation to cure, the other type (cationic emulsions) relies on ionic bonding of the emulsion and the aggregate surface. Emulsified asphalt can substitute for cutback in almost any application. Emulsified asphalts are gaining in popularity because of the energy and environmental problems associated with the use of cutback asphalts.

4.5.2 Emissions[1,2]

The primary pollutants of concern from asphalts and asphalt paving operations are volatile organic compounds (VOC). Of the 3 types of asphalts, the major source of VOC is cutback. Only minor amounts of VOCs are emitted from emulsified asphalts and asphalt cement.

VOC emissions from cutback asphalts result from the evaporation of the petroleum distillate solvent, or diluent, used to liquify the asphalt cement. Emissions occur at both the job site and the mixing plant. At the job site, VOCs are emitted from the equipment used to apply the asphaltic product and from the road surface. At the mixing plant, VOCs are released during mixing and stockpiling. The largest source of emissions, however, is the road surface itself.

For any given amount of cutback asphalt, total emissions are believed to be the same, regardless of stockpiling, mixing, and application times. The 2 major variables affecting both the quantity of VOCs emitted and the time over which emissions occur are the type and the quantity of petroleum distillate used as a diluent. As an approximation, long-term emissions from cutback

asphalts can be estimated by assuming that 95 percent of the diluent evaporates from rapid cure (RC) cutback asphalts, 70 percent from MC cutbacks, and about 25 percent from SC asphalts, by weight percent. Some of the diluent appears to be retained permanently in the road surface after application. Limited test data suggest that from RC asphalt, 75 percent of the total diluent loss occurs on the first day after application, 90 percent occurs within the first month, and 95 percent in 3 to 4 months. Evaporation takes place more slowly from MC asphalts, with roughly 20 percent of the diluent being emitted during the first day, 50 percent during the first week, and 70 percent after 3 to 4 months. No measured data are available for SC asphalts, although the quantity emitted is believed to be considerably less than with either RC or MC asphalts, and the time during which emissions take place is expected to be considerably longer (Figure 4.5-1). An example calculation for determining VOC emissions from cutback asphalts is given below:

Example: Local records indicate that 10,000 kg of RC cutback asphalt (containing 45 percent diluent, by volume) was applied in a given area during the year. Calculate the mass of VOC emitted during the year from this application.

To determine VOC emissions, the volume of diluent present in the cutback asphalt must first be determined. Because the density of naptha (0.7 kg/L) differs from that of asphalt cement (1.1 kg/L), the following equations should be solved to determine the volume of diluent (x) and the volume of asphalt cement (y) in the cutback asphalt:

$$10{,}000 \text{ kg cutback asphalt} = (\text{x liter, diluent}) \cdot \left[\frac{0.7 \text{ kg}}{\text{liter}}\right] + (\text{y liter, asphalt cement}) \cdot \left[\frac{1.1 \text{ kg}}{\text{liter}}\right]$$

and

$$\text{x liter, diluent} = 0.45\ (\text{x liter, diluent} + \text{y liter, asphalt cement})$$

From these equations, the volume of diluent present in the cutback asphalt is determined to be about 4900 liters, or about 3400 kg. Assuming that 95 percent of this is evaporative VOC, emissions are then: 3400 kg x 0.95 = 3200 kg (i. e., 32%, by weight, of the cutback asphalt eventually evaporates).

These equations can be used for medium cure and slow cure asphalts by assuming typical diluent densities of 0.8 and 0.9 kg/liter, respectively. Of course, if actual density values are known from local records, they should be used in the above equations rather than typical values. Also, if different diluent contents are used, they should also be reflected in the above calculations. If actual diluent contents are not known, a typical value of 35 percent may be assumed for inventory purposes.

In lieu of solving the equations in the above example, Table 4.5-1 may be used to estimate long-term emissions from cutback asphalts. Table 4.5-1 directly yields long-term emissions as a function of the volume of diluent added to the cutback and of the density of the diluents and asphalt cement used in the cutback asphalt. If short-term emissions are to be estimated, Figure 4.5-1 should be used in conjunction with Table 4.5-1.

No control devices are employed to reduce evaporative emissions from cutback asphalts. Asphalt emulsions are typically used in place of cutback asphalts to eliminate VOC emissions.

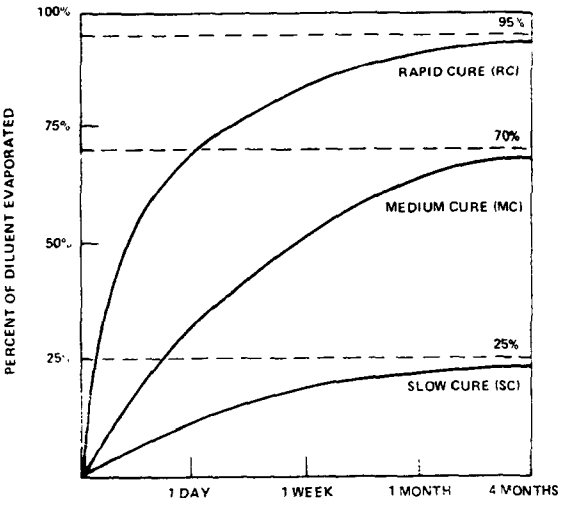

Figure 4.5-1. Percent of diluent evaporated from cutback asphalt over time.

Table 4.5-1. EVAPORATIVE VOC EMISSIONS FROM CUTBACK ASPHALTS AS A FUNCTION OF DILUENT CONTENT AND CUTBACK ASPHALT TYPE[a]

EMISSION FACTOR RATING: C

Type Of Cutback[b]	Percent, By Volume, Of Diluent In Cutback[c]		
	25%	35%	45%
Rapid cure	17	24	32
Medium cure	14	20	26
Slow cure	5	8	10

[a] These numbers represent the percent, by weight, of cutback asphalt evaporated. Factors are based on References 1-2.

[b] Typical densities assumed for diluents used in RC, MC, and SC cutbacks are 0.7, 0.8, and 0.9 kg/liter, respectively.

[c] Diluent contents typically range between 25 - 45%, by volume. Emissions may be linearly interpolated for any given type of cutback between these values.

References For Section 4.5

1. R. Keller and R. Bohn, *Nonmethane Volatile Organic Emissions From Asphalt Cement And Liquified Asphalts*, EPA-450/3-78-124, U. S. Environmental Protection Agency, Research Triangle Park, NC, December 1978.

2. F. Kirwan and C. Maday, *Air Quality And Energy Conservation Benefits From Using Emulsions To Replace Asphalt Cutbacks In Certain Paving Operations*, EPA-450/2-78-004, U. S. Environmental Protection Agency, Research Triangle Park, NC, January 1978.

3. David W. Markwordt, *Control Of Volatile Organic Compounds From Use Of Cutback Asphalt*, EPA 450/2-77-037, U. S. Environmental Protection Agency, Research Triangle Park, NC, December 1977.

4.6 Solvent Degreasing

4.6.1 General[1,2]

Solvent degreasing (or solvent cleaning) is the physical process of using organic solvents to remove grease, fats, oils, wax or soil from various metal, glass, or plastic items. The types of equipment used in this method are categorized as cold cleaners, open top vapor degreasers, or conveyorized degreasers. Nonaqueous solvents such as petroleum distillates, chlorinated hydrocarbons, ketones, and alcohols are used. Solvent selection is based on the solubility of the substance to be removed and on the toxicity, flammability, flash point, evaporation rate, boiling point, cost, and several other properties of the solvent.

The metalworking industries are the major users of solvent degreasing, i. e., automotive, electronics, plumbing, aircraft, refrigeration, and business machine industries. Solvent cleaning is also used in industries such as printing, chemicals, plastics, rubber, textiles, glass, paper, and electric power. Most repair stations for transportation vehicles and electric tools use solvent cleaning at least part of the time. Many industries use water-based alkaline wash systems for degreasing, and since these systems emit no solvent vapors to the atmosphere, they are not included in this discussion.

4.6.1.1 Cold Cleaners -

The 2 basic types of cold cleaners are maintenance and manufacturing. Cold cleaners are batch loaded, nonboiling solvent degreasers, usually providing the simplest and least expensive method of metal cleaning. Maintenance cold cleaners are smaller, more numerous, and generally use petroleum solvents as mineral spirits (petroleum distillates and Stoddard solvents). Manufacturing cold cleaners use a wide variety of solvents, which perform more specialized and higher quality cleaning with about twice the average emission rate of maintenance cold cleaners. Some cold cleaners can serve both purposes.

Cold cleaner operations include spraying, brushing, flushing, and immersion. In a typical maintenance cleaner (Figure 4.6-1), dirty parts are cleaned manually by spraying and then soaking in the tank. After cleaning, the parts are either suspended over the tank to drain or are placed on an external rack that routes the drained solvent back into the cleaner. The cover is intended to be closed whenever parts are not being handled in the cleaner. Typical manufacturing cold cleaners vary widely in design, but there are 2 basic tank designs: the simple spray sink and the dip tank. Of these, the dip tank provides more thorough cleaning through immersion, and often is made to improve cleaning efficiency by agitation. Small cold cleaning operations may be numerous in urban areas. However, because of the small quantity of emissions from each operation, the large number of individual sources within an urban area, and the application of small cold cleaning to industrial uses not directly associated with degreasing, it is difficult to identify individual small cold cleaning operations. For these reasons, factors are provided in Table 4.6-1 to estimate emissions from small cold cleaning operations over large urban geographical areas. Factors in Table 4.6-1 are for nonmethane VOC and include 25 percent 1,1,1 trichloroethane, methylene chloride, and trichlorotrifluoroethane.

4.6.1.2 Open-Top Vapor Systems -

Open-top vapor degreasers are batch loaded boiling degreasers that clean with condensation of hot solvent vapor on colder metal parts. Vapor degreasing uses halogenated solvents (usually

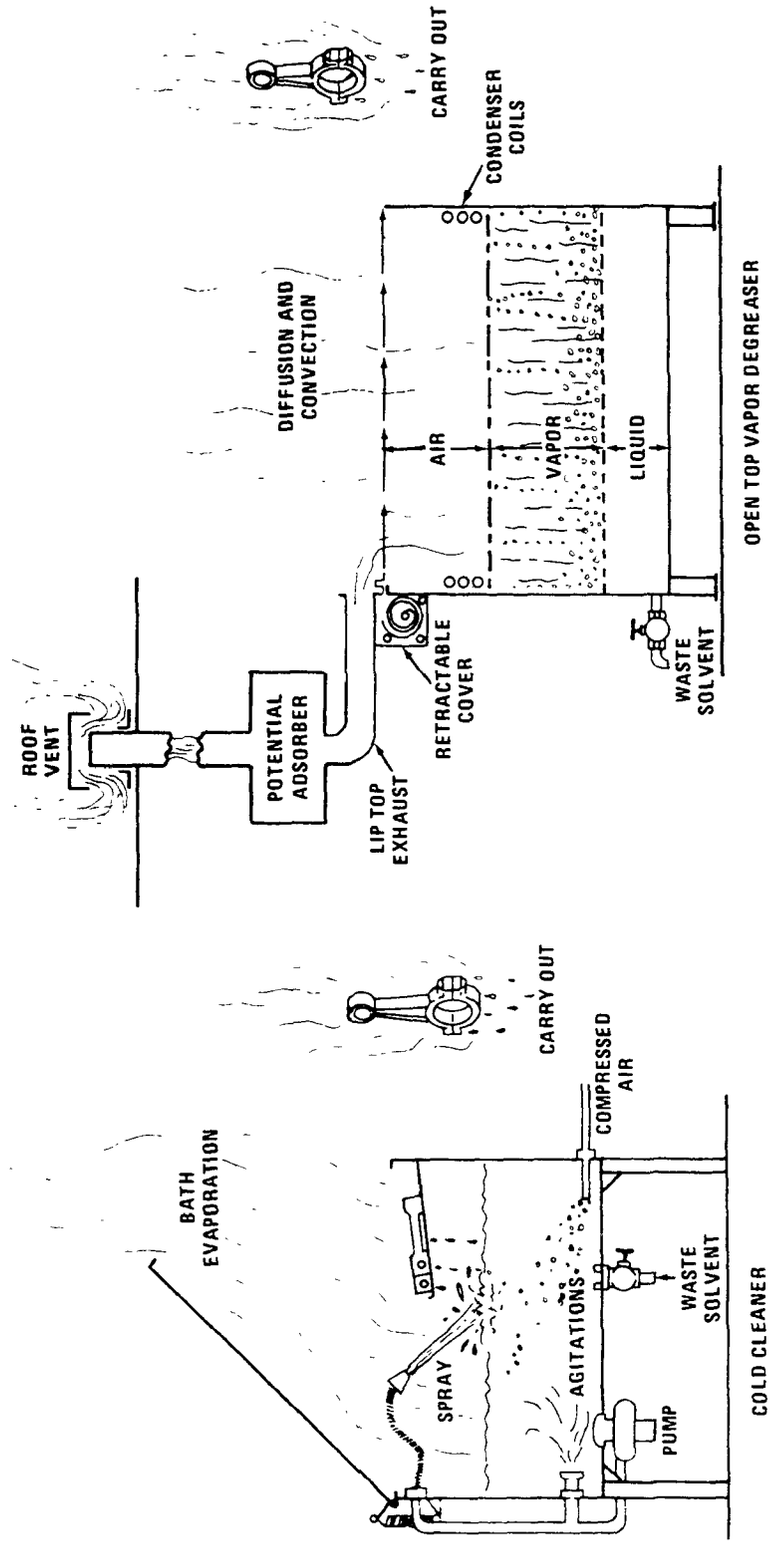

Figure 4.6-1. Degreaser emissions points.

Table 4.6-1 (Metric And English Units). NONMETHANE VOC EMISSIONS FROM SMALL COLD CLEANING DEGREASING OPERATIONS[a]

EMISSION FACTOR RATING: C

Operating Period	Per Capita Emission Factor
Annual	1.8 kg 4.0 lb
Daily[b]	5.8 g 0.013 lb

[a] Reference 3.
[b] Assumes a 6-day operating week (313 days/yr).

perchloroethylene, trichloroethylene, or 1,1,1-trichloroethane), because they are not flammable and their vapors are much heavier than air.

A typical vapor degreaser (Figure 4.6-1) is a sump containing a heater that boils the solvent to generate vapors. The height of these pure vapors is controlled by condenser coils and/or a water jacket encircling the device. Solvent and moisture condensed on the coils are directed to a water separator, where the heavier solvent is drawn off the bottom and is returned to the vapor degreaser. A "freeboard" extends above the top of the vapor zone to minimize vapor escape. Parts to be cleaned are immersed in the vapor zone, and condensation continues until they are heated to the vapor temperature. Residual liquid solvent on the parts rapidly evaporates as they are slowly removed from the vapor zone. Lip mounted exhaust systems carry solvent vapors away from operating personnel. Cleaning action is often increased by spraying the parts with solvent below the vapor level or by immersing them in the liquid solvent bath. Nearly all vapor degreasers are equipped with a water separator which allows the solvent to flow back into the degreaser.

Emission rates are usually estimated from solvent consumption data for the particular degreasing operation under consideration. Solvents are often purchased specifically for use in degreasing and are not used in any other plant operations. In these cases, purchase records provide the necessary information, and an emission factor of 1000 kg of volatile organic emissions per Mg (2000 lb/ton) of solvent purchased can be applied, based on the assumption that all solvent purchased is eventually emitted. When information on solvent consumption is not available, emission rates can be estimated if the number and type of degreasing units are known. The factors in Table 4.6-2 are based on the number of degreasers and emissions produced nationwide and may be considerably in error when applied to a particular unit.

The expected effectiveness of various control devices and procedures is listed in Table 4.6-3. As a first approximation, this efficiency can be applied without regard for the specific solvent being used. However, efficiencies are generally higher for more volatile solvents. These solvents also result in higher emission rates than those computed from the "average" factors listed in Table 4.6-2.

4.6.1.3 Conveyorized Degreasers -

Conveyorized degreasers may operate with either cold or vaporized solvent, but they merit separate consideration because they are continuously loaded and are almost always hooded or enclosed. About 85 percent are vapor types, and 15 percent are nonboiling.

Table 4.6-2 (Metric And English Units). SOLVENT LOSS EMISSION FACTORS FOR DEGREASING OPERATIONS

EMISSION FACTOR RATING: C

Type Of Degreasing	Activity Measure	Uncontrolled Organic Emission Factor[a]	
All[b]	Solvent consumed	1,000 kg/Mg	2,000 lb/ton
Cold cleaner			
Entire unit[c]	Units in operation	0.30 Mg/yr/unit	0.33 tons/yr/unit
Waste solvent loss		0.165 Mg/yr/unit	0.18 tons/yr/unit
Solvent carryout		0.075 Mg/yr/unit	0.08 tons/yr/unit
Bath and spray evaporation		0.06 Mg/yr/unit	0.07 tons/yr/unit
Entire unit	Surface area and duty cycle[d]	0.4 kg/hr/m^2	0.08 lb/hr/ft^2
Open top vapor			
Entire unit	Units in operation	9.5 Mg/yr/unit	10.5 ton/yr/unit
Entire unit	Surface area and duty cycle[e]	0.7 kg/hr/m^2	0.15 lb/hr/ft^2
Conveyorized, vapor			
Entire unit	Units in operation	24 Mg/yr/unit	26 tons/yr/unit
Conveyorized, nonboiling			
Entire unit	Units in operation	47 Mg/yr/unit	52 tons/yr/unit

[a] 100% Nonmethane VOC.
[b] Solvent consumption data will provide much more accurate emission estimates than any of the other factors presented.
[c] Emissions generally would be higher for manufacturing units and lower for maintenance units.
[d] Reference 4, Appendix C-6. For trichloroethane degreaser.
[e] For trichloroethane degreaser. Does not include waste solvent losses.

4.6.2 Emissions And Controls[1-3]

Emissions from cold cleaners occur through: (1) waste solvent evaporation, (2) solvent carryout (evaporation from wet parts), (3) solvent bath evaporation, (4) spray evaporation, and (5) agitation (Figure 4.6-1). Waste solvent loss, cold cleaning's greatest emission source, can be reduced through distillation and transport of waste solvent to special incineration plants. Draining cleaned parts for at least 15 seconds reduces carryout emissions. Bath evaporation can be controlled by using a cover regularly, by allowing an adequate freeboard height, and by avoiding excessive drafts in the workshop. If the solvent used is insoluble in and heavier than water, a layer of water 5 to 10 centimeters (2 to 4 inches) thick covering the solvent can also reduce bath evaporation. This is known as a "water cover". Spraying at low pressure also helps to reduce solvent loss from this part of the process. Agitation emissions can be controlled by using a cover, by agitating no longer than necessary, and by avoiding the use of agitation with low volatility solvents. Emissions of low volatility solvents increase significantly with agitation. However, contrary to what one might expect, agitation causes only a small increase in emissions of high volatility solvents. Solvent type is the variable that most affects cold cleaner emission rates, particularly the volatility at operating temperatures.

Table 4.6-3. PROJECTED EMISSION REDUCTION FACTORS FOR SOLVENT DEGREASING[a]

System	Cold Cleaner		Vapor Degreaser		Conveyorized Degreaser	
	A	B	A	B	A	B
Control devices						
Cover or enclosed design	X	X	X	X	X	X
Drainage facility	X	X	X			X
Water cover, refrigerated chiller, carbon adsorption or high freeboard[b]		X		X		X
Solid, fluid spray stream[c]		X		X		
Safety switches and thermostats				X		X
Emission reduction from control devices (%)	13-38	NA[d]	20-40	30-60		40-60
Operating procedures						
Proper use of equipment	X	X	X	X	X	X
Waste solvent reclamation	X	X	X	X	X	X
Reduced exhaust ventilation			X	X	X	X
Reduced conveyor or entry speed			X	X	X	X
Emission reduction from operating procedures (%)	15-45	NA[d]	15-35	20-40	20-30	20-30
Total emission reduction (%)	28-83[e]	55-69[f]	30-60	45-75	20-30	50-70

[a] Reference 2. Ranges of emission reduction present poor to excellent compliance. X indicates devices or procedures that will produce the given reductions. Letters A and B indicate different control device circumstances. See Appendix B of Reference 2.

[b] Only one of these major control devices would be used in any degreasing system. Cold cleaner system B could employ any of them. Vapor degreaser system B could employ any except water cover. Conveyorized degreaser system B could employ any except water cover and high freeboard.

[c] If agitation by spraying is used, the spray should not be a shower type.

[d] Breakout between control equipment and operating procedures is not available.

[e] A manual or mechanically assisted cover would contribute 6 - 18% reduction; draining parts 15 seconds within the degreaser, 7 - 20%; and storing waste solvent in containers, an additional 15 - 45%.

[f] Percentages represent average compliance.

As with cold cleaning, open top vapor degreasing emissions relate heavily to proper operating methods. Most emissions are due to (6) diffusion and convection, which can be reduced by using an automated cover, by using a manual cover regularly, by spraying below the vapor level, by optimizing work loads, or by using a refrigerated freeboard chiller (for which a carbon adsorption unit would be substituted on larger units). Safety switches and thermostats that prevent emissions during malfunctions and abnormal operation also reduce diffusion and convection of the vaporized solvent. Additional sources of emissions are solvent carryout, exhaust systems, and waste solvent evaporation. Carryout is directly affected by the size and shape of the workload, by racking of parts, and by cleaning and drying time. Exhaust emissions can be nearly eliminated by a carbon adsorber that collects the solvent vapors for reuse. Waste solvent evaporation is not so much a problem with vapor degreasers as it is with cold cleaners, because the halogenated solvents used are often distilled and recycled by solvent recovery systems.

Because of their large workload capacity and the fact that they are usually enclosed, conveyorized degreasers emit less solvent per part cleaned than do either of the other 2 types of degreaser. More so than operating practices, design and adjustment are major factors affecting emissions, the main source of which is carryout of vapor and liquid solvents.

References For Section 4.6

1. P. J. Marn, *et al.*, *Source Assessment: Solvent Evaporation — Degreasing*, EPA Contract No. 68-02-1874, Monsanto Research Corporation, Dayton, OH, January 1977.

2. Jeffrey Shumaker, *Control Of Volatile Organic Emissions From Solvent Metal Cleaning*, EPA-450/2-77-022, U. S. Environmental Protection Agency, Research Triangle Park, NC, November 1977.

3. W. H. Lamason, "Technical Discussion Of Per Capita Emission Factors For Several Area Sources Of Volatile Organic Compounds", Office Of Air Quality Planning And Standards, U. S. Environmental Protection Agency, Research Triangle Park, NC, March 15, 1981, unpublished.

4. K. S. Suprenant and D. W. Richards, *Study To Support New Source Performance Standards For Solvent Metal Cleaning Operations*, EPA Contract No. 68-02-1329, Dow Chemical Company, Midland, MI, June 1976.

4.7 Waste Solvent Reclamation

4.7.1 Process Description[1-4]

Waste solvents are organic dissolving agents that are contaminated with suspended and dissolved solids, organics, water, other solvents, and/or any substance not added to the solvent during its manufacture. Reclamation is the process of restoring a waste solvent to a condition that permits its reuse, either for its original purpose or for other industrial needs. All waste solvent is not reclaimed, because the cost of reclamation may exceed the value of the recovered solvent.

Industries that produce waste solvents include solvent refining, polymerization processes, vegetable oil extraction, metallurgical operations, pharmaceutical manufacture, surface coating, and cleaning operations (dry cleaning and solvent degreasing). The amount of solvent recovered from the waste varies from about 40 to 99 percent, depending on the extent and characterization of the contamination and on the recovery process employed.

Design parameters and economic factors determine whether solvent reclamation is accomplished as a main process by a private contractor, as an integral part of a main process (such as solvent refining), or as an added process (as in the surface coating and cleaning industries). Most contract solvent reprocessing operations recover halogenated hydrocarbons (e. g., methylene chloride, trichlorotrifluoroethane, and trichloroethylene) from degreasing, and/or aliphatic, aromatic, and naphthenic solvents such as those used in the paint and coatings industry. They may also reclaim small quantities of numerous specialty solvents such as phenols, nitriles, and oils.

The general reclamation scheme for solvent reuse is illustrated in Figure 4.7-1. Industrial operations may not incorporate all of these steps. For instance, initial treatment is necessary only when liquid waste solvents contain dissolved contaminants.

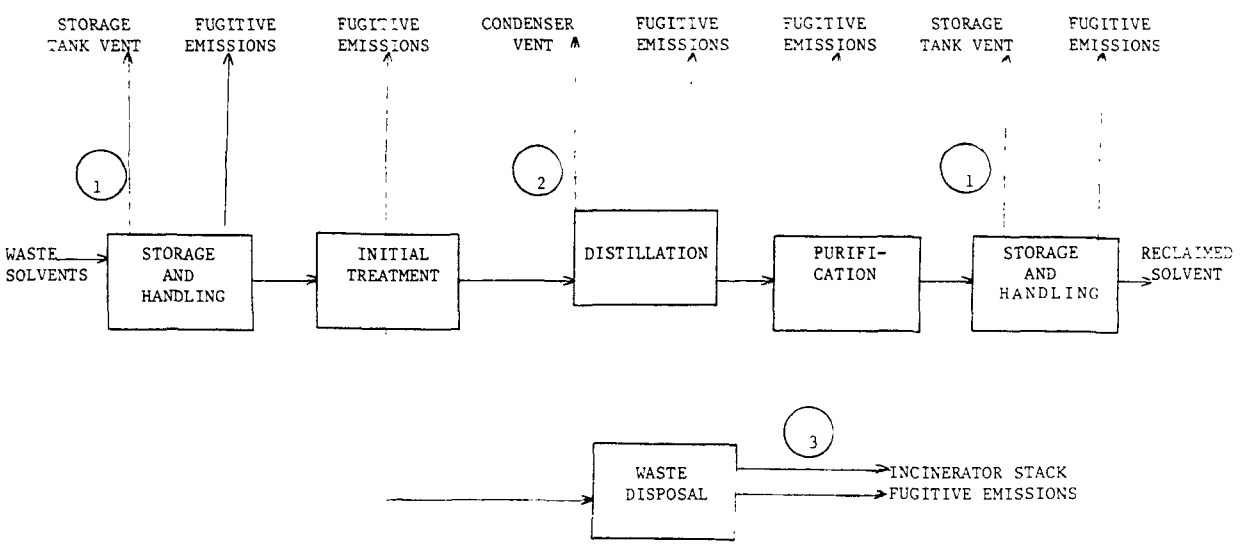

Figure 4.7-1. General waste solvent reclamation scheme and emission points.[1]

4.7.1.1 Solvent Storage And Handling -

Solvents are stored before and after reclamation in containers ranging in size from 0.2-m^3 (55-gallon) drums to tanks with capacities of 75 m^3 (20,000 gallons) or more. Storage tanks are of fixed or floating roof design. Venting systems prevent solvent vapors from creating excessive pressure or vacuum inside fixed roof tanks.

Handling includes loading waste solvent into process equipment and filling drums and tanks prior to transport and storage. The filling is most often done through submerged or bottom loading.

4.7.1.2 Initial Treatment -

Waste solvents are initially treated by vapor recovery or mechanical separation. Vapor recovery entails removal of solvent vapors from a gas stream in preparation for further reclaiming operations. In mechanical separation, undissolved solid contaminants are removed from liquid solvents.

Vapor recovery or collection methods employed include condensation, adsorption, and absorption. Technical feasibility of the method chosen depends on the solvent's miscibility, vapor composition and concentration, boiling point, reactivity, and solubility, as well as several other factors.

Condensation of solvent vapors is accomplished by water-cooled condensers and refrigeration units. For adequate recovery, a solvent vapor concentration well above 20 milligrams per cubic meter (mg/m^3) (0.009 grains per cubic foot [gr/ft^3]) is required. To avoid explosive mixtures of a flammable solvent and air in the process gas stream, air is replaced with an inert gas, such as nitrogen. Solvent vapors that escape condensation are recycled through the main process stream or recovered by adsorption or absorption.

Activated carbon adsorption is the most common method of capturing solvent emissions. Adsorption systems are capable of recovering solvent vapors in concentrations below 4 mg/m^3 (0.002 gr/ft^3) of air. Solvents with boiling points of 200°C (290°F) or more do not desorb effectively with the low-pressure steam commonly used to regenerate the carbon beds. Figure 4.7-2 shows a flow diagram of a typical fixed-bed activated carbon solvent recovery system. The mixture of steam and solvent vapor passes to a water-cooled condenser. Water-immiscible solvents are simply decanted to separate the solvent, but water-miscible solvents must be distilled, and solvent mixtures must be both decanted and distilled. Fluidized bed operations are also in use.

Absorption of solvent vapors is accomplished by passing the waste gas stream through a liquid in scrubbing towers or spray chambers. Recovery by condensation and adsorption results in a mixture of water and liquid solvent, while absorption recovery results in an oil and solvent mixture. Further reclaiming procedures are required if solvent vapors are collected by any of these 3 methods.

Initial treatment of liquid waste solvents is accomplished by mechanical separation methods. This includes both removing water by decanting and removing undissolved solids by filtering, draining, settling, and/or centrifuging. A combination of initial treatment methods may be necessary to prepare waste solvents for further processing.

4.7.1.3 Distillation -

After initial treatment, waste solvents are distilled to remove dissolved impurities and to separate solvent mixtures. Separation of dissolved impurities is accomplished by simple batch, simple continuous, or steam distillation. Mixed solvents are separated by multiple simple distillation methods, such as batch or continuous rectification. These processes are shown in Figure 4.7-3.

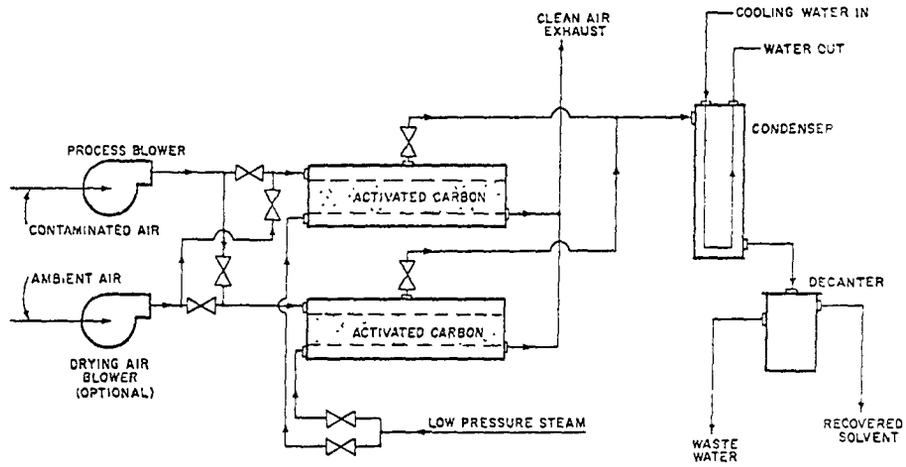

Figure 4.7-2. Typical fixed-bed activated carbon solvent recovery system.[6]

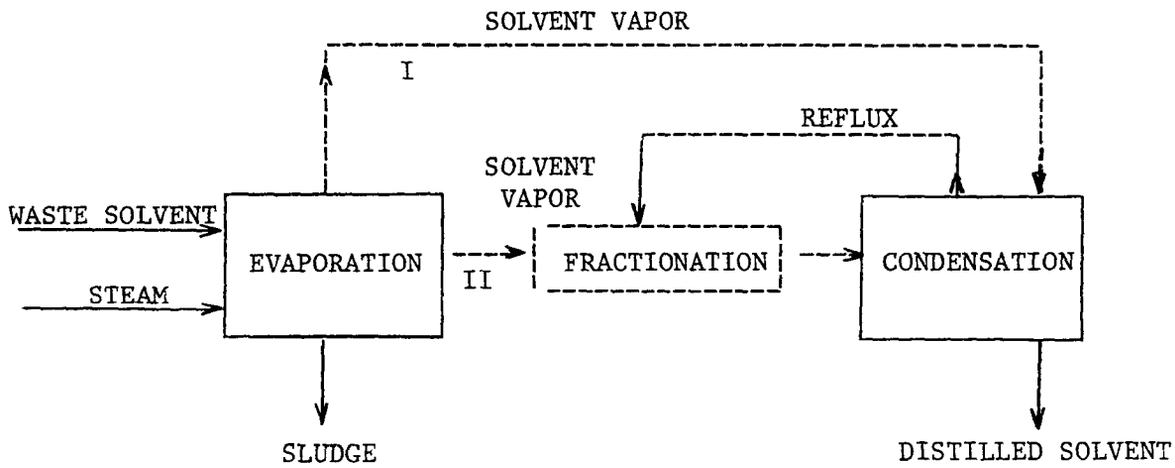

Figure 4.7-3. Distillation process for solvent reclaiming.[1]

In simple distillation, waste solvent is charged to an evaporator. Vapors are then continuously removed and condensed, and the resulting sludge or still bottoms are drawn off. In steam distillation, solvents are vaporized by direct contact with steam which is injected into the evaporator. Simple batch, continuous, and steam distillations follow Path I in Figure 4.7-3.

The separation of mixed solvents requires multiple simple distillation or rectification. Batch and continuous rectification are represented by Path II in Figure 4.7-3. In batch rectification, solvent vapors pass through a fractionating column, where they contact condensed solvent (reflux) entering at the top of the column. Solvent not returned as reflux is drawn off as overhead product. In continuous rectification, the waste solvent feed enters continuously at an intermediate point in the column. The more volatile solvents are drawn off at the top, while those with higher boiling points collect at the bottom.

Design criteria for evaporating vessels depend on waste solvent composition. Scraped surface stills or agitated thin film evaporators are the most suitable for heat sensitive or viscous materials. Condensation is accomplished by barometric or shell and tube condensers. Azeotropic solvent mixtures are separated by the addition of a third solvent component, while solvents with higher boiling points, e. g., in the range of high-flash naphthas (155°C, 310°F), are most effectively distilled under vacuum. Purity requirements for the reclaimed solvent determine the number of distillations, reflux ratios, and processing time needed.

4.7.1.4 Purification -

After distillation, water is removed from solvent by decanting or salting. Decanting is accomplished with immiscible solvent and water which, when condensed, form separate liquid layers, 1 or the other of which can be drawn off mechanically. Additional cooling of the solvent/water mix before decanting increases the separation of the 2 components by reducing their solubility. In salting, solvent is passed through a calcium chloride bed, and water is removed by absorption.

During purification, reclaimed solvents are stabilized, if necessary. Buffers are added to virgin solvents to ensure that pH level is kept constant during use. To renew it, special additives are used during purification. The composition of these additives is considered proprietary.

4.7.1.5 Waste Disposal -

Waste materials separated from solvents during initial treatment and distillation are disposed of by incineration, landfilling, or deep well injection. The composition of such waste varies, depending on the original use of the solvent. But up to 50 percent is unreclaimed solvent, which keeps the waste product viscous yet liquid, thus facilitating pumping and handling procedures. The remainder consists of components such as oils, greases, waxes, detergents, pigments, metal fines, dissolved metals, organics, vegetable fibers, and resins.

About 80 percent of the waste from solvent reclaiming by private contractors is disposed of in liquid waste incinerators. About 14 percent is deposited in sanitary landfills, usually in 55-gallon drums. Deep well injection is the pumping of wastes between impermeable geologic strata. Viscous wastes may have to be diluted for pumping into the desired stratum level.

4.7.2 Emissions And Controls[1,3-5]

Volatile organic and particulate emissions result from waste solvent reclamation. Emission points include storage tank vents [1], condenser vents [2], incinerator stacks [3], and fugitive losses (numbers refer to Figure 4.7-1 and Figure 4.7-3). Emission factors for these sources are given in Table 4.7-1.

Solvent storage results in volatile organic compound (VOC) emissions from solvent evaporation (Figure 4.7-1, emission point 1). The condensation of solvent vapors during distillation (Figure 4.7-3) also involves VOC emissions, and if steam ejectors are used, emission of steam and noncondensables as well (Figure 4.7-1 and Figure 4.7-3, point 2). Incinerator stack emissions consist

Table 4.7-1 (Metric And English Units). EMISSION FACTORS FOR SOLVENT RECLAIMING[a]

EMISSION FACTOR RATING: D

Source	Criteria Pollutant	Emission Factor Average	
		kg/Mg	lb/ton
Storage tank vent[b]	Volatile organics	0.01 (0.002 - 0.04)	0.02 (0.004 - 0.09)
Condenser vent	Volatile organics	1.65 (0.26 - 4.17)	3.30 (0.52 - 8.34)
Incinerator stack[c]	Volatile organics	0.01	0.02
Incinerator stack	Particulates	0.72 (0.55 - 1.0)	1.44 (1.1 - 2.0)
Fugitive emissions			
Spillage[c]	Volatile organics	0.10	0.20
Loading	Volatile organics	0.36 (0.00012 - 0.71)	0.72 (0.00024 - 1.42)
Leaks	Volatile organics	ND	ND
Open sources	Volatile organics	ND	ND

[a] Reference 1. Data obtained from state air pollution control agencies and presurvey sampling. All emission factors are for uncontrolled process equipment, except those for the incinerator stack. (Reference 1 does not, however, specify what the control is on this stack.) Average factors are derived from the range of data points available. Factors for these sources are given in terms of kilograms per megagram and pounds per ton of reclaimed solvent. Ranges in parentheses. ND = no data.
[b] Storage tank is of fixed roof design.
[c] Only 1 value available.

of solid contaminants that are oxidized and released as particulates, unburned organics, and combustion stack gases (Figure 4.7-1, point 3).

VOC emissions from equipment leaks, open solvent sources (sludge drawoff and storage from distillation and initial treatment operations), solvent loading, and solvent spills are classified as fugitive. The former 2 sources are continuously released, and the latter 2, intermittently.

Solvent reclamation is viewed by industry as a form of control in itself. Carbon adsorption systems can remove up to 95 percent of the solvent vapors from an air stream. It is estimated that less than 50 percent of reclamation plants run by private contractors use any control technology.

Volatile organic emissions from the storage of solvents can be reduced by as much as 98 percent by converting from fixed to floating roof tanks, although the exact percent reduction also

depends on solvent evaporation rate, ambient temperature, loading rate, and tank capacity. Tanks may also be refrigerated or equipped with conservation vents which prevent air inflow and vapor escape until some preset vacuum or pressure develops.

Solvent vapors vented during distillation are controlled by scrubbers and condensers. Direct flame and catalytic afterburners can also be used to control noncondensables and solvent vapors not condensed during distillation. The time required for complete combustion depends on the flammability of the solvent. Carbon or oil adsorption may be employed also, as in the case of vent gases from the manufacture of vegetable oils.

Wet scrubbers are used to remove particulates from sludge incinerator exhaust gases, although they do not effectively control submicron particles.

Submerged rather than splash filling of storage tanks and tank cars can reduce solvent emissions from this source by more than 50 percent. Proper plant maintenance and loading procedures reduce emissions from leaks and spills. Open solvent sources can be covered to reduce these fugitive emissions.

References For Section 4.7

1. D. R. Tierney and T. W. Hughes, *Source Assessment: Reclaiming Of Waste Solvents — State Of The Art*, EPA-600/2-78/004f, U. S. Environmental Protection Agency, Cincinnati, OH, April 1978.

2. J. E. Levin and F. Scofield, "An Assessment Of The Solvent Reclaiming Industry", Proceedings of the 170th Meeting of the American Chemical Society, Chicago, IL, *35*(2):416-418, August 25-29, 1975.

3. H. M. Rowson, "Design Considerations In Solvent Recovery", Proceedings of the Metropolitan Engineers' Council On Air Resources (MECAR) Symposium On New Developments In Air Pollutant Control, New York, NY, October 23, 1961, pp. 110-128.

4. J. C. Cooper and F. T. Cuniff, "Control Of Solvent Emissions", Proceedings of the Metropolitan Engineers' Council On Air Resources (MECAR) Symposium On New Developments In Air Pollution Control, New York, NY, October 23, 1961, pp. 30-41.

5. W. R. Meyer, "Solvent Broke", Proceedings of TAPPI Testing Paper Synthetics Conference, Boston, MA, October 7-9, 1974, pp. 109-115.

6. Nathan R. Shaw, "Vapor Adsorption Technology For Recovery Of Chlorinated Hydrocarbons And Other Solvents", Presented at the 80th Annual Meeting of the Air Pollution Control Association, Boston, MA, June 15-20, 1975.

4.8 Tank And Drum Cleaning

4.8.1 General

Rail tank cars, tank trucks, and drums are used to transport about 700 different commodities. Rail tank cars and most tank trucks and drums are in dedicated service (carrying one commodity only) and, unless contaminated, are cleaned only prior to repair or testing. Nondedicated tank trucks (about 20,000, or 22 percent of the total in service) and drums (approximately 5.6 million, or 12.5 percent of the total) are cleaned after every trip.

4.8.1.1 Rail Tank Cars -

Most rail tank cars are privately owned. Some cars, like those owned by the railroads, are operated for hire. The commodities hauled are 35 percent petroleum products, 20 percent organic chemicals, 25 percent inorganic chemicals, 15 percent compressed gases, and 5 percent food products. Petroleum products considered in this study are glycols, vinyls, acetones, benzenes, creosote, etc. Not included in these figures are gasoline, diesel oil, fuel oils, jet fuels, and motor oils, the greatest portion of these being transported in dedicated service.

Much tank car cleaning is conducted at shipping and receiving terminals, where the wastes go to the manufacturers' treatment systems. However, 30 to 40 percent is done at service stations operated by tank car owners/lessors. These installations clean waste of a wide variety of commodities, many of which require special cleaning methods.

A typical tank car cleaning facility cleans 4 to 10 cars per day. Car capacity varies from 40 to 130 cubic meters (m^3) (10,000 to 34,000 gallons [gal]). Cleaning agents include steam, water, detergents, and solvents, which are applied using steam hoses, pressure wands, or rotating spray heads placed through the opening in the top of the car. Scraping of hardened or crystallized products is often necessary. Cars carrying gases and volatile materials, and those needing to be pressure tested, must be filled or flushed with water. The average amount of residual material cleaned from each car is estimated to be 250 kilograms (kg) (550 pounds [lb]). Vapors from car cleaning not flared or dissolved in water are dissipated to the atmosphere.

4.8.1.2 Tank Trucks -

Two-thirds of the tank trucks in service in the United States are operated for hire. Of these, 80 percent are used to haul bulk liquids. Most companies operate fleets of 5 trucks or less, and whenever possible, these trucks are assigned to dedicated service. Commodities hauled and cleaned are 15 percent petroleum products (except as noted in Part 4.8.1.1), 35 percent organic chemicals, 5 percent food products, and 10 percent other products.

Interior washing is carried out at many tank truck dispatch terminals. Cleaning agents include water, steam, detergents, bases, acids, and solvents, which are applied with hand-held pressure wands or by Turco or Butterworth rotating spray nozzles. Detergent, acidic, or basic solutions are usually used until spent and then sent to treatment facilities. Solvents are recycled in a closed system, with sludges either incinerated or landfilled. The average amount of material cleaned from each trailer is 100 kg (220 lb). Vapors from volatile material are flared at a few terminals, but most commonly are dissipated to the atmosphere. Approximately 0.23 m^3 (60 gal) of liquid are used per tank truck steam cleaning and 20.9 m^3 (5500 gal) for full flushing.

4.8.1.3 Drums -

Both 0.2- and 0.11-m^3 (30- and 55-gal) drums are used to ship a vast variety of commodities, with organic chemicals (including solvents) accounting for 50 percent. The remaining 50 percent includes inorganic chemicals, asphaltic materials, elastomeric materials, printing inks, paints, food additives, fuel oils, and other products.

Drums made entirely of 18-gauge steel have an average life, with total cleaning, of 8 trips. Those with 20-gauge bodies and 18-gauge heads have an average life of 3 trips. Not all drums are cleaned, especially those of thinner construction.

Tighthead drums that have carried materials that are easy to clean are steamed or washed with base. Steam cleaning is done by inserting a nozzle into the drum, with vapors going to the atmosphere. Base washing is done by tumbling the drum with a charge of hot caustic solution and some pieces of chain.

Drums used to carry materials that are difficult to clean are burned out, either in a furnace or in the open. Those with tightheads have the tops cut out and are reconditioned as open head drums. Drum burning furnaces may be batch or continuous. Several gas burners bathe the drum in flame, burning away the contents, lining, and outside paint in a nominal 4-minute period and at a temperature of at least 480°C (900°F) but not more than 540°C (1000°F) to prevent warping of the drum. Emissions are vented to an afterburner or secondary combustion chamber, where the gases are raised to at least 760°C (1400°F) for a minimum of 0.5 seconds. The average amount of material removed from each drum is 2 kg (4.4 lb).

4.8.2 Emissions And Controls

4.8.2.1 Rail Tank Cars And Tank Trucks -

Atmospheric emissions from tank car and truck cleaning are predominantly volatile organic chemical vapors. To achieve a practical but representative picture of these emissions, the organic chemicals hauled by the carriers must be known by classes of high, medium, and low viscosities and of high, medium, and low vapor pressures. High-viscosity materials do not drain readily, affecting the quantity of material remaining in the tank, and high-vapor-pressure materials volatilize more readily during cleaning and tend to lead to greater emissions.

Practical and economically feasible controls of atmospheric emissions from tank car and truck cleaning do not exist, except for containers transporting commodities that produce combustible gases and water soluble vapors (such as ammonia and chlorine). Gases displaced as tanks are filled are sent to a flare and burned. Water soluble vapors are absorbed in water and are sent to the waste water system. Any other emissions are vented to the atmosphere.

Tables 4.8-1 and 4.8-2 give emission factors for representative organic chemicals hauled by tank cars and trucks.

4.8.2.2 Drums -

There is no control for emissions from steaming of drums. Solution or caustic washing yields negligible air emissions, because the drum is closed during the wash cycle. Atmospheric emissions from steaming or washing drums are predominantly organic chemical vapors.

Air emissions from drum burning furnaces are controlled by proper operation of the afterburner or secondary combustion chamber, where gases are raised to at least 760°C (1400°F) for a minimum of 0.5 seconds. This normally ensures complete combustion of organic materials and

Table 4.8-1 (Metric And English Units). EMISSION FACTORS FOR RAIL TANK CAR CLEANING[a]

EMISSION FACTOR RATING: D

Compound	Chemical Class		Total Emissions[a]	
	Vapor Pressure	Viscosity	g/car	lb/car
Ethylene glycol[b]	low	high	0.3	0.0007
Chlorobenzene[b]	medium	medium	15.7	0.0346
o-Dichlorobenzene[b]	low	medium	75.4	0.1662
Creosote[c]	low	high	2350	5.1808

[a] Reference 1. Emission factors are in terms of average weight of pollutant released per car cleaned.
[b] Two-hour test duration.
[c] Eight-hour test duration.

Table 4.8-2 (Metric And English Units). EMISSION FACTORS FOR TANK TRUCK CLEANING[a]

EMISSION FACTOR RATING: D

Compound	Chemical Class		Total Emissions[a]	
	Vapor Pressure	Viscosity	g/truck	lb/truck
Acetone	high	low	311	0.686
Perchloroethylene	high	low	215	0.474
Methyl methacrylate	medium	medium	32.4	0.071
Phenol	low	low	5.5	0.012
Propylene glycol	low	high	1.07	0.002

[a] Reference 1. One-hour test duration.

prevents the formation, and subsequent release, of large quantities of NO_x, CO, and particulates. In open burning, however, there is no feasible way of controlling the release of incomplete combustion products to the atmosphere. The conversion of open cleaning operations to closed-cycle cleaning, and the elimination of open-air drum burning seem to be the only control alternatives immediately available.

Table 4.8-3 gives emission factors for representative criteria pollutants emitted from drum burning and cleaning.

Table 4.8-3 (Metric And English Units). EMISSION FACTORS FOR DRUM BURNING[a]

EMISSION FACTOR RATING: E

Pollutant	Total Emissions			
	Controlled		Uncontrolled	
	g/drum	lb/drum	g/drum	lb/drum
Particulate	12[b]	0.02646	16	0.035
NO_x	0.018	0.00004	0.89	0.002
VOC	Neg	Neg	Neg	Neg

[a] Reference 1. Emission factors are in terms of weight of pollutant released per drum burned, except for VOC, which are per drum washed. Neg = negligible.
[b] Reference 1, Table 17, and Appendix A.

Reference For Section 4.8

1. T. R. Blackwood, *et al.*, *Source Assessment: Rail Tank Car, Tank Truck, And Drum Cleaning, State Of The Art*, EPA-600/2-78-004g, U. S. Environmental Protection Agency, Cincinnati, OH, April 1978.

4.9 Graphic Arts

4.9.1 General Graphic Printing

4.9.2 Publication Gravure Printing

4.9.1 General Graphic Printing

4.9.1.1 Process Description

The term "graphic arts" as used here means 4 basic processes of the printing industry: web offset lithography, web letterpress, rotogravure, and flexography. Screen printing and manual and sheet-fed techniques are not included in this discussion.

Printing may be performed on coated or uncoated paper and on other surfaces, as in metal decorating and some fabric coating (see Section 4.2, Surface Coating). The material to receive the printing is called the substrate. The distinction between printing and paper coating, which may employ rotogravure or lithographic methods, is that printing invariably involves the application of ink by a printing press. However, printing and paper coating have these elements in common: application of a relatively high-solvent-content material to the surface of a moving web or film, rapid solvent evaporation by movement of heated air across the wet surface, and solvent-laden air exhausted from the system.

Printing inks vary widely in composition, but all consist of 3 major components: pigments, which produce the desired colors and are composed of finely divided organic and inorganic materials; binders, the solid components that lock the pigments to the substrate and are composed of organic resins and polymers or, in some inks, oils and rosins; and solvents, which dissolve or disperse the pigments and binders and are usually composed of organic compounds. The binder and solvent make up the "vehicle" part of the ink. The solvent evaporates from the ink into the atmosphere during the drying process.

4.9.1.1.1 Web Offset Lithography -

Lithography, the process used to produce about 75 percent of books and pamphlets and an increasing number of newspapers, is characterized by a planographic image carrier (i. e., the image and nonimage areas are on the same plane). The image area is ink wettable and water repellant, and the nonimage area is chemically repellant to ink. The solution used to dampen the plate may contain 15 to 30 percent isopropanol, if the Dalgren dampening system is used.[8] When the image is applied to a rubber-covered "blanket" cylinder and then transferred onto the substrate, the process is known as "offset" lithography. When a web (i. e., a continuous roll) of paper is employed with the offset process, this is known as web offset printing. Figure 4.9.1-1 illustrates a web offset lithography publication printing line. A web newspaper printing line contains no dryer, because the ink contains very little solvent, and somewhat porous paper is generally used.

Web offset employs "heatset" (i. e., heat drying offset) inks that dry very quickly. For publication work the inks contain about 40 percent solvent, and for newspaper work 5 percent solvent is used. In both cases, the solvents are usually petroleum-derived hydrocarbons. In a publication web offset process, the web is printed on both sides simultaneously and passed through a tunnel or floater dryer at about 200 - 290°C (400 - 500°F) . The dryer may be hot air or direct flame. Approximately 40 percent of the incoming solvent remains in the ink film, and more may be thermally degraded in a direct flame dryer. The web passes over chill rolls before folding and cutting. In newspaper work no dryer is used, and most of the solvent is believed to remain in the ink film on the paper.[11]

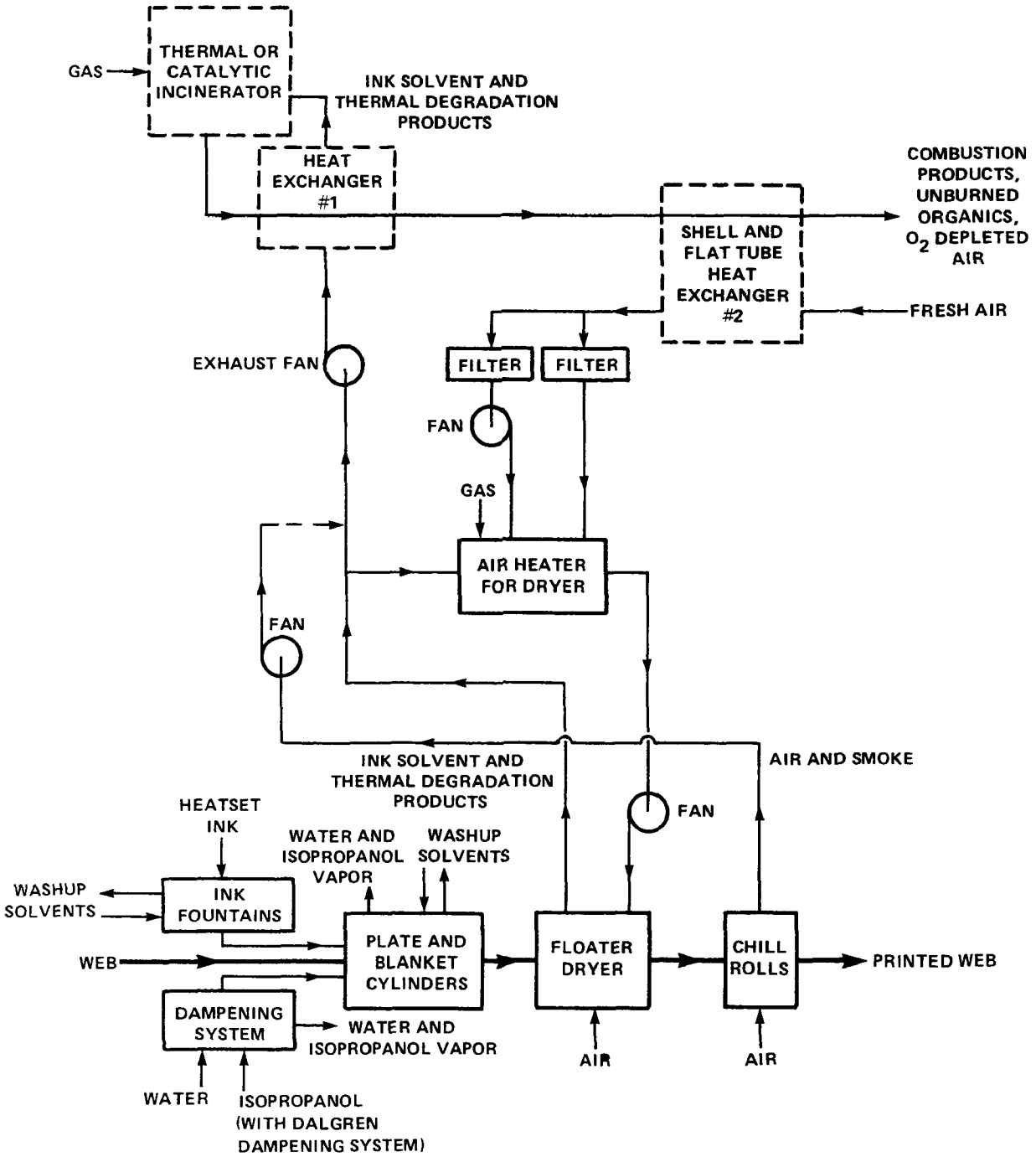

Figure 4.9.1-1. Web offset lithography publication printing line emission points.[11]

4.9.1.1.2 Web Letterpress -

Letterpress is the oldest form of moveable type printing, and it still dominates in periodical and newspaper publishing, although numerous major newspapers are converting to web offset. In letterpress printing, the image area is raised, and the ink is transferred to the paper directly from the image surface. The image carrier may be made of metal or plastic. Only web presses using solventborne inks are discussed here. Letterpress newspaper and sheet-fed printing use oxidative drying inks, not a source of volatile organic emissions. Figure 4.9.1-2 shows 1 unit of a web publication letterpress line.

Publication letterpress printing uses a paper web that is printed on 1 side at a time and dried after each color is applied. The inks employed are heatset, usually of about 40 volume percent solvent. The solvent in high-speed operations is generally a selected petroleum fraction akin to kerosene and fuel oil, with a boiling point of 200 - 370°C (400 - 700°F).[13]

4.9.1.1.3 Rotogravure -

In gravure printing, the image area is engraved, or "intaglio" relative to the surface of the image carrier, which is a copper-plated steel cylinder that is usually also chrome plated to enhance wear resistance. The gravure cylinder rotates in an ink trough or fountain. The ink is picked up in the engraved area, and ink is scraped off the nonimage area with a steel "doctor blade". The image is transferred directly to the web when it is pressed against the cylinder by a rubber covered impression roll, and the product is then dried. Rotary gravure (web fed) systems are known as "rotogravure" presses.

Rotogravure can produce illustrations with excellent color control, and it may be used on coated or uncoated paper, film, foil, and almost every other type of substrate. Its use is concentrated in publications and advertising such as newspaper supplements, magazines, and mail order catalogues; folding cartons and other flexible packaging materials; and specialty products such as wall and floor coverings, decorated household paper products, and vinyl upholstery. Figure 4.9.1-3 illustrates 1 unit of a publication rotogravure press. Multiple units are required for printing multiple colors.

The inks used in rotogravure publication printing contain from 55 to 95 volume percent low boiling solvent (average is 75 volume percent), and they must have low viscosities. Typical gravure solvents include alcohols, aliphatic naphthas, aromatic hydrocarbons, esters, glycol ethers, ketones, and nitroparaffins. Water-base inks are in regular production use in some packaging and specialty applications, such as sugar bags.

Rotogravure is similar to letterpress printing in that the web is printed on one side at a time and must be dried after application of each color. Thus, for 4-color, 2-sided publication printing, 8 presses are employed, each including a pass over a steam drum or through a hot air dryer at temperatures from ambient up to 120°C (250°F) where nearly all of the solvent is removed.[3] For further information, see Section 4.9.2.

4.9.1.1.4 Flexography -

In flexographic printing, as in letterpress, the image area is above the surface of the plate. The distinction is that flexography uses a rubber image carrier and alcohol-base inks. The process is usually web fed and is employed for medium or long multicolor runs on a variety of substrates, including heavy paper, fiberboard, and metal and plastic foil. The major categories of the flexography market are flexible packaging and laminates, multiwall bags, milk cartons, gift wrap, folding cartons, corrugated paperboard (which is sheet fed), paper cups and plates, labels, tapes, and envelopes. Almost all milk cartons and multiwall bags and half of all flexible packaging are printed by this process.

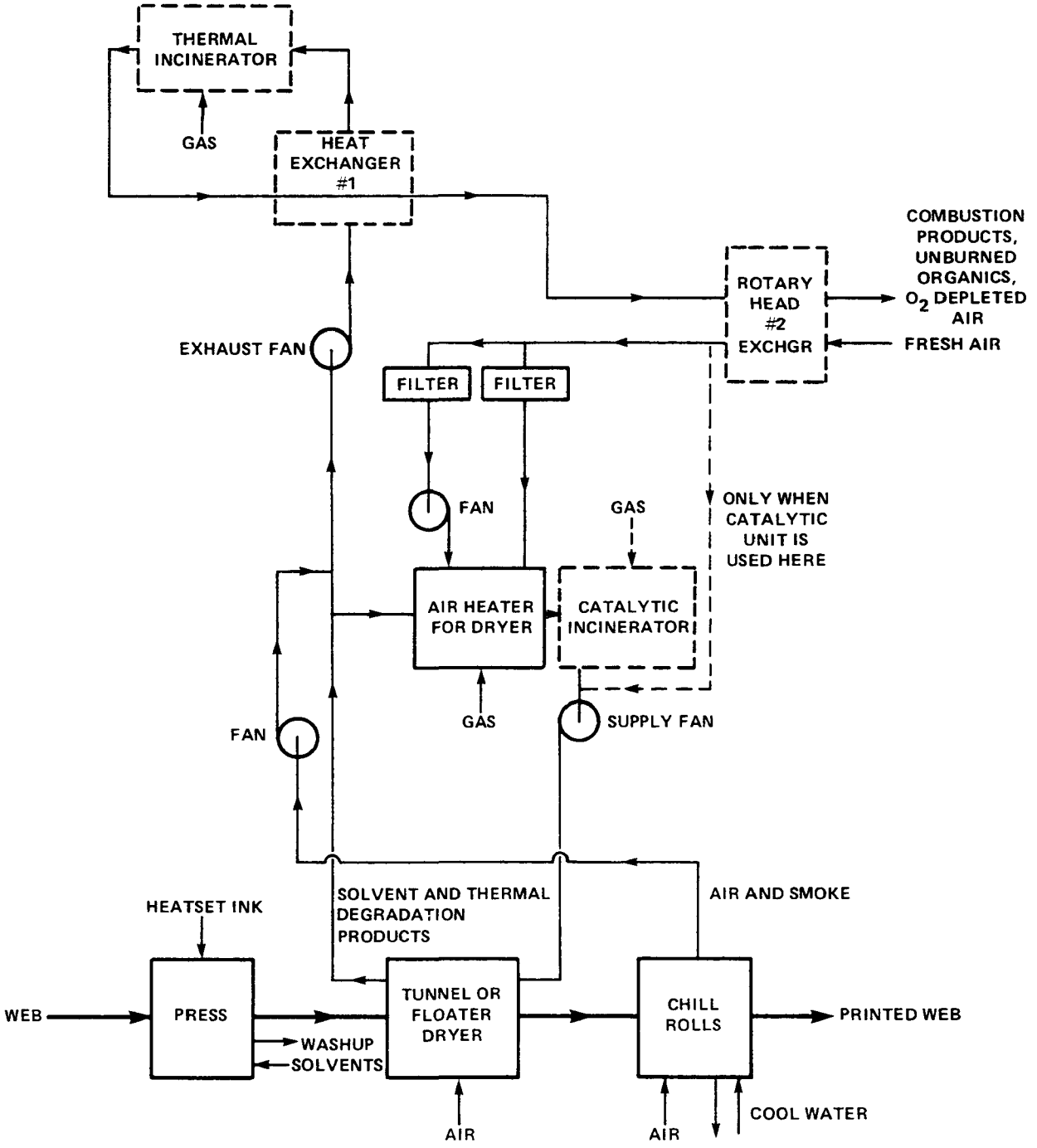

Figure 4.9.1-2. Web letterpress publication printing line emission points.[11]

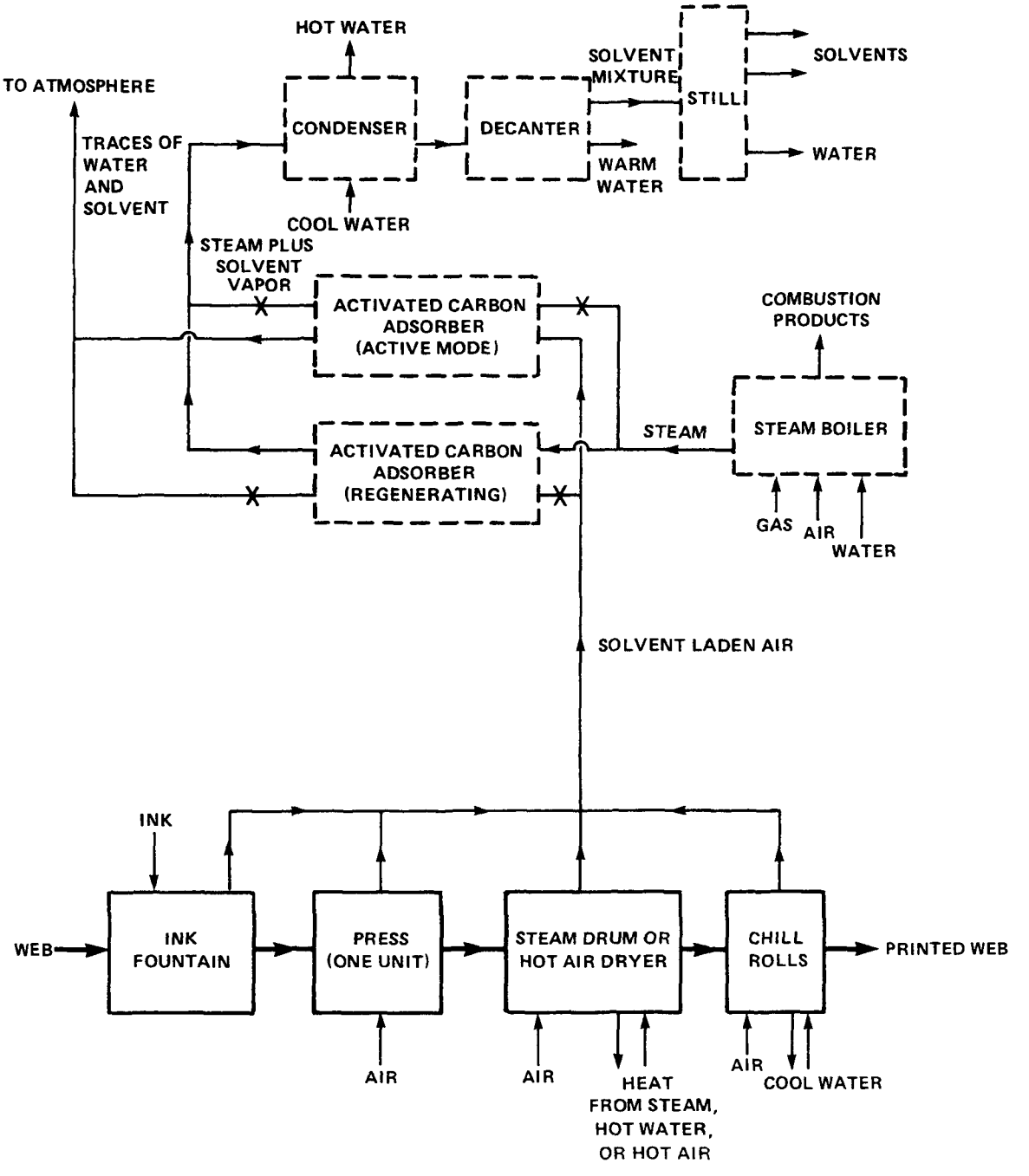

Figure 4.9.1-3. Rotogravure and flexography printing line emission points (chill rolls not used in rotogravure publication printing).[11]

Steam set inks, employed in the "water flexo" or "steam set flexo" process, are low-viscosity inks of a paste consistency that are gelled by water or steam. Steam-set inks are used for paper bag printing, and they produce no significant emissions. Water-base inks, usually pigmented suspensions in water, are also available for some flexographic operations, such as the printing of multiwall bags.

Solvent-base inks are used primarily in publication printing, as shown in Figure 4.9.1-3. As with rotogravure, flexography publication printing uses very fluid inks of about 75 volume percent organic solvent. The solvent, which must be rubber compatible, may be alcohol, or alcohol mixed with an aliphatic hydrocarbon or ester. Typical solvents also include glycols, ketones, and ethers. The inks dry by solvent absorption into the web and by evaporation, usually in high velocity steam drum or hot air dryers, at temperatures below 120°C (250°F).[3,13] As in letterpress publishing, the web is printed on only 1 side at a time. The web passes over chill rolls after drying.

4.9.1.2 Emissions And Controls

Significant emissions from printing operations consist primarily of volatile organic solvents. Such emissions vary with printing process, ink formulation and coverage, press size and speed, and operating time. The type of paper (coated or uncoated) has little effect on the quantity of emissions, although low levels of organic emissions are derived from the paper stock during drying.[13] High-volume web-fed presses such as those discussed above are the principal sources of solvent vapors. Total annual emissions from the industry in 1977 were estimated to be 380,000 megagrams (Mg) (418,000 tons). Of this total, lithography emits 28 percent, letterpress 18 percent, gravure 41 percent, and flexography 13 percent.[3]

Most of the solvent contained in the ink and used for dampening and cleanup eventually finds its way into the atmosphere, but some solvent remains with the printed product leaving the plant and is released to the atmosphere later. Overall solvent emissions can be computed from Equation 1 using a material balance concept, except in cases where a direct flame dryer is used and some of the solvent is thermally degraded.

The density of naphtha base solvent at 21°C (70°F) is 0.742 kilogams per liter (kg/L) (6.2 pounds per gallon [lb/gal]).

$$E_{total} = T \qquad (1)$$

where:

E_{total} = total solvent emissions including those from the printed product, kg (lb)
T = total solvent use including solvent contained in ink as used, kg (lb)

The solvent emissions from the dryer and other printline components can be computed from Equation 2. The remaining solvent leaves the plant with the printed product and/or is degraded in the dryer.

$$E = \frac{ISd}{100} \frac{(100-P)}{100} \qquad (2)$$

where:

E = solvent emissions from printline, kg (lb)
I = ink use, liters (gallons)
S and P = factors from Table 4.9.1-1.
d = solvent density, kg/L (lb/gal)

Table 4.9.1-1. TYPICAL PARAMETERS FOR COMPUTING SOLVENT EMISSIONS FROM PRINTING LINES[a,b]

Process	Solvent Content Of Ink (Volume %) [S]	Solvent Remaining In Product Plus That Destroyed In Dryer (%) [P][c]	EMISSION FACTOR RATING
Web Offset Lithography Publication	40	40 (hot air dryer) 60 (direct flame dryer)	B
Newspaper	5	100	B
Web Letterpress Publication	40	40	B
Newspaper	0	NA	NA
Rotogravure	75	2 - 7	C
Flexography	75	2 - 7	C

[a] References 1,14. NA = not applicable.
[b] Values for S and P are typical. Specific values for S and P should be obtained from a source to estimate its emissions.
[c] For certain packaging products, amount of solvent retained is regulated by the Food and Drug Administration (FDA).

4.9.1.2.1 Per Capita Emission Factors -

Although major sources contribute most of the emissions for graphic arts operations, considerable emissions also originate from minor graphic arts applications, including inhouse printing services in general industries. Small sources within the graphic arts industry are numerous and difficult to identify, since many applications are associated with nonprinting industries. Table 4.9.1-2 presents per capita factors for estimating emissions from small graphic arts operations. The factors are entirely nonmethane VOC and should be used for emission estimates over broad geographical areas.

Table 4.9.1-2 (Metric And English Units). PER CAPITA NONMETHANE VOC EMISSION FACTORS FOR SMALL GRAPHIC ARTS APPLICATIONS

EMISSION FACTOR RATING: D

Units	Emission Factor[a]
kg/year/capita	0.4
lb/year/capita	0.8
g/day/capita	1[b]
lb/day/capita	0.003[b]

[a] Reference 15. All nonmethane VOC.
[b] Assumes a 6-day operating week (313 days/yr).

4.9.1.2.2 Web Offset Lithography -

Emission points on web offset lithography publication printing lines include: (1) the ink fountains, (2) the dampening system, (3) the plate and blanket cylinders, (4) the dryer, (5) the chill rolls, and (6) the product (see Figure 4.9.1-1).

Alcohol is emitted from Points 2 and 3. Washup solvents are a small source of emissions from Points 1 and 3. Drying (Point 4) is the major source, because 40 to 60 percent of the ink solvent is removed from the web during this process.

The quantity of web offset emissions may be estimated from Equation 1, or from Equation 2 and the appropriate data from Table 4.9.1-1.

4.9.1.2.3 Web Letterpress -

Emission points on web letterpress publication printing lines are: (1) the press (includes the image carrier and inking mechanism), (2) the dryer, (3) the chill rolls, and (4) the product (see Figure 4.9.1-2).

Web letterpress publication printing produces significant emissions, primarily from the ink solvent, about 60 percent of which is lost in the drying process. Washup solvents are a small source of emissions. The quantity of emissions can be computed as described for web offset.

Letterpress publication printing uses a variety of papers and inks that lead to emission control problems, but losses can be reduced by a thermal or catalytic incinerator, either of which may be coupled with a heat exchanger.

4.9.1.2.4 Rotogravure -

Emissions from rotogravure printing occur at: (1) the ink fountain, (2) the press, (3) the dryer, and (4) the chill rolls (see Figure 4.9.1-3). The dryer is the major emission point, because most of the VOC in the low boiling ink is removed during drying. The quantity of emissions can be computed from Equation 1, or from Equation 2 and the appropriate parameters from Table 4.9.1-1.

Vapor capture systems are necessary to minimize fugitive solvent vapor loss around the ink fountain and at the chill rolls. Fume incinerators and carbon adsorbers are the only devices that have a high efficiency in controlling vapors from rotogravure operations.

Solvent recovery by carbon adsorption systems has been quite successful at a number of large publication rotogravure plants. These presses use a single water-immiscible solvent (toluene) or a simple mixture that can be recovered in approximately the proportions used in the ink. All new publication gravure plants are being designed to include solvent recovery.

Some smaller rotogravure operations, such as those that print and coat packaging materials, use complex solvent mixtures in which many of the solvents are water soluble. Thermal incineration with heat recovery is usually the most feasible control for such operations. With adequate primary and secondary heat recovery, the amount of fuel required to operate both the incinerator and the dryer system can be reduced to less than that normally required to operate the dryer alone.

In addition to thermal and catalytic incinerators, pebble bed incinerators are also available. Pebble bed incinerators combine the functions of a heat exchanger and a combustion device, and can achieve a heat recovery efficiency of 85 percent.

VOC emissions can also be reduced by using low-solvent inks. Waterborne inks, in which the volatile portion contains up to 20 volume percent water soluble organic compounds, are used extensively in rotogravure printing of multiwall bags, corrugated paperboard, and other packaging products, although water absorption into the paper limits the amount of waterborne ink that can be printed on thin stock before the web is seriously weakened.

4.9.1.2.5 Flexography -

Emission points on flexographic printing lines are: (1) the ink fountain, (2) the press, (3) the dryer, and (4) the chill rolls (see Figure 4.9.1-3). The dryer is the major emission point, and emissions can be estimated from Equation 1, or from Equation 2 and the appropriate parameters from Table 4.9.1-1.

Vapor capture systems are necessary to minimize fugitive solvent vapor loss around the ink fountain and at the chill rolls. Fume incinerators are the only devices proven highly efficient in controlling vapors from flexographic operations. VOC emissions can also be reduced by using waterborne inks, which are used extensively in flexographic printing of packaging products.

Table 4.9-3 shows estimated control efficiencies for printing operations.

Table 4.9-3. ESTIMATED CONTROL TECHNOLOGY EFFICIENCIES FOR PRINTING LINES

Method	Application	Reduction in Organic Emissions (%)
Carbon adsorption	Publication rotogravure operations	75[a]
Incineration[b]	Web offset lithography	95[c]
	Web letterpress	95[d]
	Packaging rotogravure printing operations	65[a]
	Flexography printing operations	60[a]
Waterborne inks[e]	Some packaging rotogravure printing operations[f]	65 - 75[a]
	Some flexography packaging printing operations	60[a]

[a] Reference 3. Overall emission reduction efficiency (capture efficiency multiplied by control device efficiency).
[b] Direct flame (thermal) catalytic and pebble bed. Three or more pebble beds in a system have a heat recovery efficiency of 85%.
[c] Reference 12. Efficiency of volatile organic removal — does not consider capture efficiency.
[d] Reference 13. Efficiency of volatile organic removal — does not consider capture efficiency.
[e] Solvent portion consists of 75 volume % water and 25 volume % organic solvent.
[f] With less demanding quality requirements.

References For Section 4.9.1

1. "Air Pollution Control Technology Applicable To 26 Sources Of Volatile Organic Compounds", Office Of Air Quality Planning And Standards, U. S. Environmental Protection Agency, Research Triangle Park, NC, May 27, 1977. Unpublished.

2. Peter N. Formica, *Controlled And Uncontrolled Emission Rates And Applicable Limitations For Eighty Processes*, EPA-340/1-78-004, U. S. Environmental Protection Agency, Research Triangle Park, NC, April 1978.

3. Edwin J. Vincent and William M. Vatavuk, *Control Of Volatile Organic Emissions From Existing Stationary Sources, Volume VIII: Graphic Arts — Rotogravure And Flexography*, EPA-450/2-78-033, U. S. Environmental Protection Agency, Research Triangle Park, NC, December 1978.

4. Telephone communication with C. M. Higby, Cal/Ink, Berkeley, CA, March 28, 1978.

5. T. W. Hughes, *et al.*, *Prioritization Of Air Pollution From Industrial Surface Coating Operations*, EPA-650/2-75-019a, U. S. Environmental Protection Agency, Cincinnati, OH, February 1975.

6. Harvey F. George, "Gravure Industry's Environmental Program", *Environmental Aspects Of Chemical Use In Printing Operations*, EPA-560/1-75-005, U.S. Environmental Protection Agency, Research Triangle Park, NC, January 1976.

7. K. A. Bownes, "Material Of Flexography", *ibid.*

8. Ben H. Carpenter and Garland R. Hilliard, "Overview Of Printing Processes And Chemicals Used", *ibid.*

9. R. L. Harvin, "Recovery And Reuse of Organic Ink Solvents", *ibid.*

10. Joseph L. Zborovsky, "Current Status Of Web Heatset Emission Control Technology", *ibid.*

11. R. R. Gadomski, *et al.*, *Evaluations Of Emission And Control Technologies In The Graphic Arts Industries, Phase I: Final Report*, APTD-0597, National Air Pollution Control Administration, Cincinnati, OH, August 1970.

12. R.R. Gadomski, *et al.*, *Evaluations Of Emissions And Control Technologies In The Graphic Arts Industries, Phase II: Web Offset And Metal Decorating Processes*, APTD-1463, U. S. Environmental Protection Agency, Research Triangle Park, NC, May 1973.

13. *Control Techniques For Volatile Organic Emissions From Stationary Sources*, EPA-450/2-78-022, U. S. Environmental Protection Agency, Research Triangle Park, NC, May 1978.

14. Telephone communication with Edwin J. Vincent, Office Of Air Quality Planning And Standards, U. S. Environmental Protection Agency, Research Triangle Park, NC, July 1979.

15. W. H. Lamason, "Technical Discussion Of Per Capita Emission Factors For Several Area Sources Of Volatile Organic Compounds", Office Of Air Quality Planning And Standards, U. S. Environmental Protection Agency, Research Triangle Park, NC, March 15, 1981. Unpublished.

4.9.2 Publication Gravure Printing

4.9.2.1 Process Description[1-2]

Publication gravure printing is the printing by the rotogravure process of a variety of paper products such as magazines, catalogs, newspaper supplements and preprinted inserts, and advertisements. Publication printing is the largest sector involved in gravure printing, representing over 37 percent of the total gravure product sales value in a 1976 study.

The rotogravure press is designed to operate as a continuous printing facility, and normal operation may be either continuous or nearly so. Normal press operation experiences numerous shutdowns caused by web breaks or mechanical problems. Each rotogravure press generally consists of 8 to 16 individual printing units, with an 8-unit press the most common. In publication printing, only 4 colors of ink are used: yellow, red, blue, and black. Each unit prints 1 ink color on 1 side of the web, and colors other than these 4 are produced by printing 1 color over another to yield the desired product.

In the rotogravure printing process, a web or substrate from a continuous roll is passed over the image surface of a revolving gravure cylinder. For publication printing, only paper webs are used. The printing images are formed by many tiny recesses or cells etched or engraved into the surface of the gravure cylinder. The cylinder is about one-fourth submerged in a fountain of low-viscosity mixed ink. Raw ink is solvent-diluted at the press and is sometimes mixed with related coatings, usually referred to as extenders or varnishes. The ink, as applied, is a mixture of pigments, binders, varnish, and solvent. The mixed ink is picked up by the cells on the revolving cylinder surface and is continuously applied to the paper web. After impression is made, the web travels through an enclosed heated air dryer to evaporate the volatile solvent. The web is then guided along a series of rollers to the next printing unit. Figure 4.9.2-1 illustrates this printing process by an end (or side) view of a single printing unit.

At present, only solventborne inks are used on a large scale for publication printing. Waterborne inks are still in research and development stages, but some are now being used in a few limited cases. Pigments, binders, and varnishes are the nonvolatile solid components of the mixed ink. For publication printing, only aliphatic and aromatic organic liquids are used as solvents. Presently, 2 basic types of solvents, toluene and a toluene-xylene-naphtha mixture, are used. The naphtha base solvent is the more common. Benzene is present in both solvent types as an impurity, in concentrations up to about 0.3 volume percent. Raw inks, as purchased, have 40 to 60 volume percent solvent, and the related coatings typically contain about 60 to 80 volume percent solvent. The applied mixed ink consists of 75 to 80 volume percent solvent, required to achieve the proper fluidity for rotogravure printing.

4.9.2.2 Emissions And Controls[1,3-4]

Volatile organic compound (VOC) vapors are the only significant air pollutant emissions from publication rotogravure printing. Emissions from the printing presses depend on the total amount of solvent used. The sources of these VOC emissions are the solvent components in the raw inks, related coatings used at the printing presses, and solvent added for dilution and press cleaning. These solvent organics are photochemically reactive. VOC emissions from both controlled and uncontrolled publication rotogravure facilities in 1977 were about 57,000 megagrams (Mg) (63,000 tons),

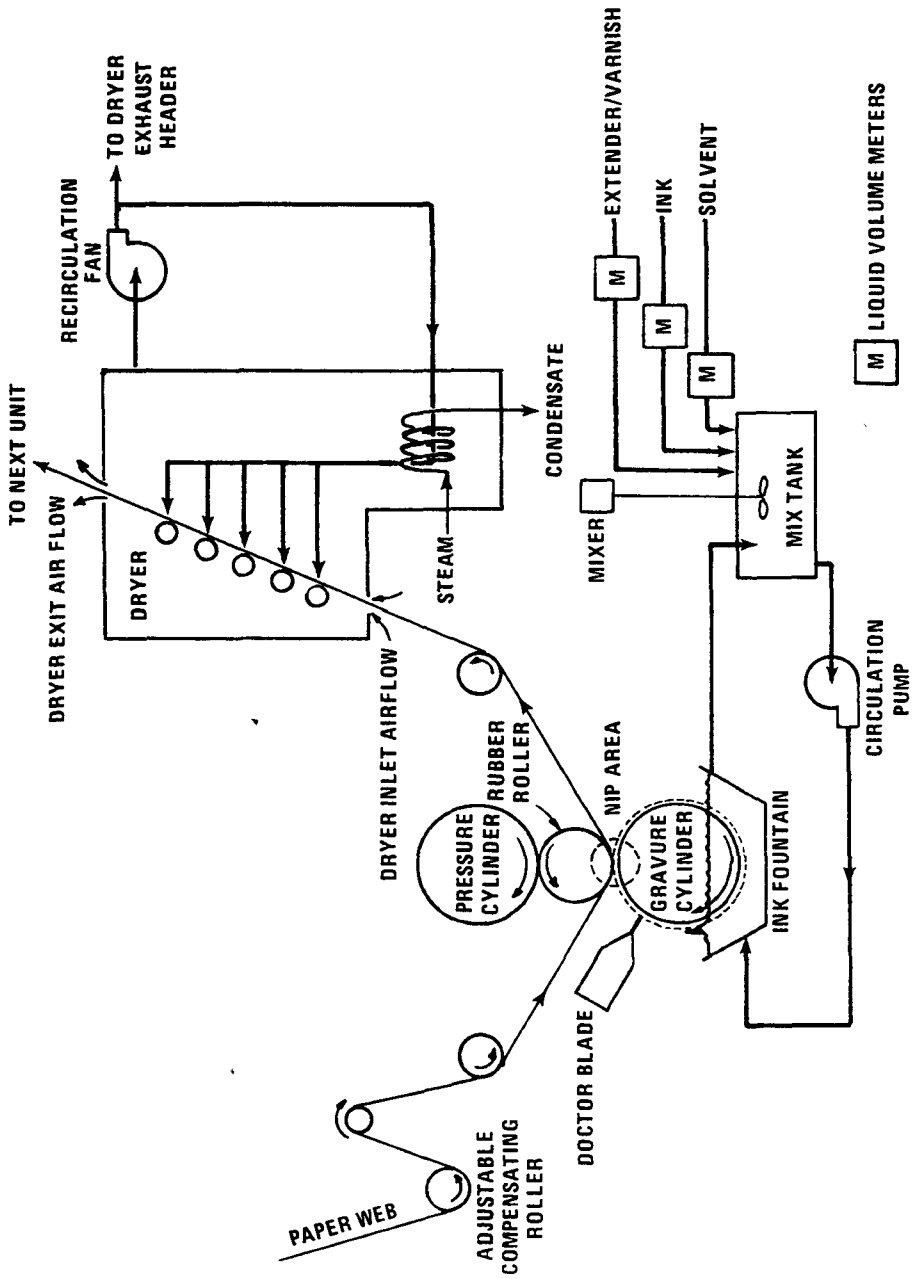

Figure 4.9.2-1. Diagram of a rotogravure printing unit.

15 percent of the total from the graphic arts industry. Emissions from ink and solvent storage and transfer facilities are not considered here.

Table 4.9.2-1 presents emission factors for publication printing on rotogravure presses with and without control equipment. The potential amount of VOC emissions from the press is equal to the total amount of solvent consumed in the printing process (see Footnote f). For uncontrolled presses, emissions occur from the dryer exhaust vents, printing fugitive vapors, and evaporation of solvent retained in the printed product. About 75 to 90 percent of the VOC emissions occur from the dryer exhausts, depending on press operating speed, press shutdown frequency, ink and solvent composition, product printed, and dryer designs and efficiencies. The amount of solvent retained by the various rotogravure printed products is 3 to 4 percent of the total solvent in the ink used. The retained solvent eventually evaporates after the printed product leaves the press.

There are numerous points around the printing press from which fugitive emissions occur. Most of the fugitive vapors result from solvent evaporation in the ink fountain, exposed parts of the gravure cylinder, the paper path at the dryer inlet, and from the paper web after exiting the dryers between printing units. The quantity of fugitive vapors depends on the solvent volatility, the temperature of the ink and solvent in the ink fountain, the amount of exposed area around the press, dryer designs and efficiencies, and the frequency of press shutdowns.

The complete air pollution control system for a modern publication rotogravure printing facility consists of 2 sections: the solvent vapor capture system and the emission control device. The capture system collects VOC vapors emitted from the presses and directs them to a control device where they are either recovered or destroyed. Low-VOC waterborne ink systems to replace a significant amount of solventborne inks have not been developed as an emission reduction alternative.

4.9.2.2.1 Capture Systems -

Presently, only the concentrated dryer exhausts are captured at most facilities. The dryer exhausts contain the majority of the VOC vapors emitted. The capture efficiency of dryers is limited by their operating temperatures and other factors that affect the release of the solvent vapors from the print and web to the dryer air. Excessively high temperatures impair product quality. The capture efficiency of older design dryer exhaust systems is about 84 percent, and modern dryer systems can achieve 85 to 89 percent capture. For a typical press, this type capture system consists of ductwork from each printing unit's dryer exhaust joined in a large header. One or more large fans are employed to pull the solvent-laden air from the dryers and to direct it to the control device.

A few facilities have increased capture efficiency by gathering fugitive solvent vapors along with the dryer exhausts. Fugitive vapors can be captured by a hood above the press, by a partial enclosure around the press, by a system of multiple spot pickup vents, by multiple floor sweep vents, by total pressroom ventilation capture, or by various combinations of these. The design of any fugitive vapor capture system needs to be versatile enough to allow safe and adequate access to the press in press shutdowns. The efficiencies of these combined dryer exhaust and fugitive capture systems can be as high as 93 to 97 percent at times, but the demonstrated achievable long term average when printing several types of products is only about 90 percent.

4.9.2.2.2 Control Devices -

Various control devices and techniques may be employed to control captured VOC vapors from rotogravure presses. All such controls are of 2 categories: solvent recovery and solvent destruction.

Table 4.9.2-1 (Metric And English Units). EMISSION FACTORS FOR PUBLICATION ROTOGRAVURE PRINTING PRESSES

EMISSION FACTOR RATING: C

Emission Points	VOC Emissions[a]								
	Uncontrolled			75% Control			85% Control		
	Total Solvent	Raw Ink		Total Solvent	Raw Ink		Total Solvent	Raw Ink	
	kg/kg (lb/lb)	kg/L	lb/gal	kg/kg (lb/lb)	kg/L	lb/gal	kg/kg (lb/lb)	kg/L	lb/gal
Dryer exhausts[b]	0.84	1.24	10.42	—	—	—	—	—	—
Fugitives[c]	0.13	0.19	1.61	0.13	0.19	1.61	0.07	0.10	0.87
Printed product[d]	0.03	0.05	0.37	0.03	0.05	0.37	0.03	0.05	0.37
Control device[e]	—	—	—	0.09	0.13	1.12	0.05	0.07	0.62
Total emissions[f]	1.0	1.48	12.40	0.25	0.37	3.10	0.15	0.22	1.86

[a] All nonmethane. Mass of VOC emitted per mass of total solvent used are more accurate factors. Solvent assumed to consist entirely of VOC. Total solvent used includes all solvent in raw ink and related coatings, all dilution solvent added and all cleaning solvent used. Mass of VOC emitted per volume of raw ink (and coatings) used are general factors, based on typical dilution solvent volume addition. Actual factors based on ink use can vary significantly, as follows:

- Typical total solvent volume/raw ink (and coatings) volume ratio - 2.0 (liter/liter) (L/L) (gal/gal); range, 1.6 - 2.4. See References 1,5-8.

- Solvent density (D_s) varies with composition and temperature. At 21°C (70°F), the density of the most common mixed solvent used is 0.742 kg/L (6.2 lb/gal); density of toluene solvent used is 0.863 kg/L (7.2 lb/gal). See Reference 1.

- Mass of VOC emitted/raw ink (and coating) volume ratio determined from the mass emission factor ratio, the solvent/ink volume ratio, and the solvent density.

$$kg/L = kg/kg \times L/L \times D_s$$
$$(lb/gal = lb/lb \times gal/gal \times D_s)$$

[b] Reference 3 and test data for presses with dryer exhaust control only (Reference 1). Dryer exhaust emissions depend on press operating speed, press shutdown frequency, ink and solvent composition, product printed, and dryer design and efficiencies. Emissions can range from 75 - 90% of total press emissions.

[c] Determined by difference between total emissions and other point emissions.

[d] Reference 1. Solvent temporarily retained in product after leaving press depends on dryer efficiency, type of paper, and type of ink used. Emissions have been reported to range from 1 - 7% of total press emissions.

[e] Based on capture and control device efficiencies (see Footnote f). Emissions are residual content in captured solvent-laden air vented after treatment.

[f] References 1,3. Uncontrolled presses eventually emit 100% of total solvent used. Controlled press emissions are based on overall reduction efficiency equal to capture efficiency x control device efficiency. For 75% control, the capture efficiency is 84% with a 90% efficient control device. For 85% control, the capture efficiency is 90% with a 95% control device.

Solvent recovery is the only present technique to control VOC emissions from publication presses. Fixed-bed carbon adsorption by multiple vessels operating in parallel configuration, regenerated by steaming, represents the most used control device. A new adsorption technique using a fluidized bed of carbon might be employed in the future. The recovered solvent can be directly recycled to the presses.

There are 3 types of solvent destruction devices used to control VOC emissions: (1) conventional thermal oxidation, (2) catalytic oxidation, and (3) regenerative thermal combustion. These control devices are employed for other rotogravure printing. At present, none are being used on publication rotogravure presses.

The efficiency of both solvent destruction and solvent recovery control devices can be as high as 99 percent. However, the achievable long-term average efficiency for publication printing is about 95 percent. Older carbon adsorber systems were designed to perform at about 90 percent efficiency. Control device emission factors presented in Table 4.9.2-1 represent the residual vapor content of the captured solvent-laden air vented after treatment.

4.9.2.2.3 Overall Control -

The overall emission reduction efficiency for VOC control systems is equal to the capture efficiency times the control device efficiency. Emission factors for 2 control levels are presented in Table 4.9.2-1. The 75 percent control level represents 84 percent capture with a 90 percent efficient control device. (This is the EPA control techniques guideline recommendation for State regulations on old existing presses.) The 85 percent control level represents 90 percent capture with a 95 percent efficient control device. This corresponds to application of best demonstrated control technology for new publication presses.

References For Section 4.9.2

1. *Publication Rotogravure Printing — Background Information For Proposed Standards*, EPA-450/3-80-031a, U. S. Environmental Protection Agency, Research Triangle Park, NC, October 1980.

2. *Publication Rotogravure Printing — Background Information For Promulgated Standards*, EPA-450/3-80-031b, U. S. Environmental Protection Agency, Research Triangle Park, NC. Expected November 1981.

3. *Control Of Volatile Organic Emissions From Existing Stationary Sources, Volume VIII: Graphic Arts — Rotogravure And Flexography*, EPA-450/2-78-033, U. S. Environmental Protection Agency, Research Triangle Park, NC, December 1978.

4. *Standards Of Performance For New Stationary Sources: Graphic Arts — Publication Rotogravure Printing*, 45 FR 71538, October 28, 1980.

5. Written communication from Texas Color Printers, Inc., Dallas, TX, to Radian Corp., Research Triangle Park, NC, July 3, 1979.

6. Written communication from Meredith/Burda, Lynchburg, VA, to Edwin Vincent, Office Of Air Quality Planning And Standards, U. S. Environmental Protection Agency, Research Triangle Park, NC, July 6, 1979.

7. W. R. Feairheller, *Graphic Arts Emission Test Report, Meredith/Burda*, Lynchburg, VA, EPA Contract No. 68-02-2818, Monsanto Research Corp., Dayton, OH, April 1979.

8. W. R. Feairheller, *Graphic Arts Emission Test Report, Texas Color Printers*, Dallas, TX, EPA Contract No. 68-02-2818, Monsanto Research Corp., Dayton, OH, October 1979.

4.10 Commercial/Consumer Solvent Use

4.10.1 General[1-2]

Commercial and consumer use of various products containing volatile organic compounds (VOC) contributes to formation of tropospheric ozone. The organics in these products may be released through immediate evaporation of an aerosol spray, evaporation after application, and direct release in the gaseous phase. Organics may act either as a carrier for the active product ingredients or as active ingredients themselves. Commercial and consumer products that release VOCs include aerosols, household products, toiletries, rubbing compounds, windshield washing fluids, polishes and waxes, nonindustrial adhesives, space deodorants, moth control applications, and laundry detergents and treatments.

4.10.2 Emissions

Major volatile organic constituents of these products which are released to the atmosphere include special naphthas, alcohols, and various chloro- and fluorocarbons. Although methane is not included in these products, 31 percent of the VOCs released in the use of these products is considered nonreactive under EPA policy.[3,4]

National emissions and per capita emission factors for commercial and consumer solvent use are presented in Table 4.10-1. Per capita emission factors can be applied to area source inventories by multiplying the factors by inventory area population. Note that adjustment to exclude the nonreactive emission fraction cited above should be applied to total emissions or to the composite factor. Care is advised in making adjustments, in that substitution of compounds within the commercial/consumer products market may alter the nonreactive fraction of compounds.

Table 4.10-1 (Metric And English Units). EVAPORATIVE EMISSIONS FROM COMMERCIAL/CONSUMER SOLVENT USE

EMISSION FACTOR RATING: C

Nonmethane VOC[a]						
	National Emissions		Per Capita Emission Factors			
Use	10^3 Mg/yr	10^3 tons/yr	kg/yr	lb/yr	g/day[b]	10^{-3} lb/day
Aerosol products	342	376	1.6	3.5	4.4	9.6
Household products	183	201	0.86	1.9	2.4	5.2
Toiletries	132	145	0.64	1.4	1.8	3.8
Rubbing compounds	62	68	0.29	0.64	0.80	1.8
Windshield washing	61	67	0.29	0.63	0.77	1.7
Polishes and waxes	48	53	0.22	0.49	0.59	1.3

Table 4.10-1 (cont.).

Nonmethane VOC[a]						
	National Emissions		Per Capita Emission Factors			
Use	10^3 Mg/yr	10^3 tons/yr	kg/yr	lb/yr	g/day[b]	10^{-3} lb/day
Nonindustrial adhesives	29	32	0.13	0.29	0.36	0.79
Space deodorant	18	20	0.09	0.19	0.24	0.52
Moth control	16	18	0.07	0.15	0.19	0.41
Laundry detergent	4	4	0.02	0.04	0.05	0.10
Total[c]	895	984	4.2	9.2	11.6	25.2

[a] References 1-2.
[b] Calculated by dividing kg/yr (lb/yr) by 365 and converting to appropriate units.
[c] Totals may not be additive because of rounding.

References For Section 4.10

1. W. H. Lamason, *"Technical Discussion Of Per Capita Emission Factors For Several Area Sources Of Volatile Organic Compounds"*, Monitoring And Data Analysis Division, U. S. Environmental Protection Agency, Research Triangle Park, NC, March 15, 1981. Unpublished.

2. *End Use Of Solvents Containing Volatile Organic Compounds*, EPA-450/3-79-032, U. S. Environmental Protection Agency, Research Triangle Park, NC, May 1979.

3. *Final Emission Inventory Requirements For 1982 Ozone State Implementation Plans*, EPA-450/4-80-016, U. S. Environmental Protection Agency, Research Triangle Park, NC, December 1980.

4. *Procedures For The Preparation Of Emission Inventories For Volatile Organic Compounds, Volume I, Second Edition*, EPA-450/2-77-028, U. S. Environmental Protection Agency, Research Triangle Park, NC, September 1980.

4.11 Textile Fabric Printing

4.11.1 Process Description[1-2]

Textile fabric printing is part of the textile finishing industry. In fabric printing, a decorative pattern or design is applied to constructed fabric by roller, flat screen, or rotary screen methods. Pollutants of interest in fabric printing are volatile organic compounds (VOC) from mineral spirit solvents in print pastes or inks. Tables 4.11-1, 4.11-2, and 4.11-3 show typical printing run characteristics and VOC emission sources, respectively, for roller, flat screen, and rotary screen printing methods.

In the roller printing process, print paste is applied to an engraved roller, and the fabric is guided between it and a central cylinder. The pressure of the roller and central cylinder forces the print paste into the fabric. Because of the high quality it can achieve, roller printing is the most appealing method for printing designer and fashion apparel fabrics.

In flat screen printing, a screen on which print paste has been applied is lowered onto a section of fabric. A squeegee then moves across the screen, forcing the print paste through the screen and into the fabric. Flat screen machines are used mostly in printing terry towels.

In rotary screen printing, tubular screens rotate at the same velocity as the fabric. Print paste distributed inside the tubular screen is forced into the fabric as it is pressed between the screen and a printing blanket (a continuous rubber belt). Rotary screen printing machines are used mostly but not exclusively for bottom weight apparel fabrics or fabric not for apparel use. Host knit fabric is printed by the rotary screen method, because it does not stress (pull or stretch) the fabric during the process.

Major print paste components include clear and color concentrates, a solvent, and in pigment printing, a low crock or binder resin. Print paste color concentrates contain either pigments or dyes. Pigments are insoluble particles physically bound to fabrics. Dyes are in solutions applied to impart color by becoming chemically or physically incorporated into individual fibers. Organic solvents are used almost exclusively with pigments. Very little organic solvent is used in nonpigment print pastes. Clear concentrates extend color concentrates to create light and dark shades. Clear and color concentrates do contain some VOC but contribute less than 1 percent of total VOC emissions from textile printing operations. Defoamers and resins are included in print paste to increase color fastness. A small amount of thickening agent is also added to each print paste to control print paste viscosity. Print defoamers, resins, and thickening agents do not contain VOC.

The majority of emissions from print paste are from the solvent, which may be aqueous, organic (mineral spirits), or both. The organic solvent concentration in print pastes may vary from 0 to 60 weight percent, with no consistent ratio of organic solvent to water. Mineral spirits used in print pastes vary widely in physical and chemical properties (see Table 4.11-4).

Although some mineral spirits evaporate in the early stages of the printing process, the majority of emissions to the atmosphere is from the printed fabric drying process, which drives off volatile compounds (see Tables 4.11-2 and 4.11-3 for typical VOC emission splits). For some specific print paste/fabric combinations, color fixing occurs in a curing process, which may be entirely separate or merely a separate segment of the drying process.

Table 4.11-1 (Metric And English Units). TYPICAL TEXTILE FABRIC PRINTING RUN CHARACTERISTICS[a]

Characteristic	Roller		Rotary Screen		Flat Screen	
	Range	Average	Range	Average	Range	Average
Wet pickup rate, kg (lb)[b] print paste consumed/kg (lb) of fabric[c]	0.51 - 0.58	0.56	0.10 - 1.89	0.58	0.22 - 0.83	0.35
Fabric weight, kg/m^2 (lb/yd^2)[d]	0.116 - 0.116 (0.213 - 0.213)	0.116 (0.213)	0.116 - 0.116 (0.213 - 0.213)	0.116 (0.213)	0.314 - 0.314 (0.579 - 0.579)	0.314 (0.579)
Mineral spirits added to print paste, weight %	0 - 60	26	0 - 50	3	23 - 23	23
Print paste used per fabric area, kg/m^2 (lb/yd^2)[e]	0.059 - 0.067 (0.109 - 0.124)	0.065 (0.119)	0.012 - 0.219 (0.021 - 0.403)	0.067 (0.124)	0.069 - 0.261 (0.127 - 0.481)	0.110 (0.203)
Mineral spirits used per fabric area, kg/m^2 (lb/yd^2)[f]	0 - 0.040 (0 - 0.074)	0.017 (0.031)	0 - 0.109 (0 - 0.201)	0.0002 (0.0004)	0.016 - 0.060 (0.030 - 0.111)	0.025 (0.046)
Print paste used in run, kg (lb)[g]	673 - 764 (1,490 - 1,695)	741 (1,627)	137 - 2,497 (287 - 5,509)	764 (1,695)	787 - 2,975 (1,736 - 6,575)	1,254 (2,775)

[a] Length of run = 10,000 m (10,936 yd); fabric width = 1.14 m (1.25 yd); total fabric area = 11,400 m^2 (13,634 yd^2); line speed = 40 m/min (44 yd/min); distance, printer to oven = 5 m (5.5 yd).
[b] Wet pickup rate is a method of yield calculation in which mass of print paste consumed is divided by mass of fabric used.
[c] Reference 3.
[d] Only average fabric weight is presented.
[e] Fabric weight multiplied by wet pickup rate.
[f] Fabric weight multiplied by wet pickup multiplied by percent mineral spirits in formulation.
[g] Print paste used per fabric area multiplied by area of fabric printed.

Table 4.11-2 (Metric Units). SOURCES OF MINERAL SPIRIT EMISSIONS FROM A TYPICAL TEXTILE FABRIC PRINTING RUN[a]

Source	Percent Of Total Emissions	Roller		Rotary Screen		Flat Screen	
		Range (kg)	Average (kg)	Range (kg)	Average (kg)	Range (kg)	Average (kg)
Mineral spirits used in run[b]	100.0	0 - 458	193	0 - 1,249	23	181 - 684	288
Wasted mineral spirits (potential water emissions)[c]	6.2	0 - 28	12	0 - 77	1	11 - 42	18
Overprinted mineral spirit fugitives[d]	3.5	0 - 16	7	0 - 44	1	6 - 24	10
Tray and barrel fugitives[e]	0.3	0 - 1	1	0 - 4	0	1 - 2	1
Flashoff fugitives[e]	1.5	0 - 7	3	0 - 19	0	3 - 10	4
Dryer emissions[e]	88.5	0 - 405	170	0 - 1,105	21	160 - 606	255

[a] Length of run = 10,000 m; fabric width = 1.14 m; total fabric area = 11,400 m^2; line speed = 40 m/min; distance, printer to oven = 5 m.
[b] Print paste used in run multiplied by mineral spirits added to print paste, weight percent.
[c] Estimate provided by industry contacts.
[d] Estimated on the basis of 2.5 cm of overprint on each side of fabric.
[e] Emission splits calculated from percentages provided by evaporation computations.

Table 4.11-3 (English Units). SOURCES OF MINERAL SPIRIT EMISSIONS FROM A TYPICAL TEXTILE FABRIC PRINTING RUN[a]

Source	Percent Of Total Emissions	Roller		Rotary Screen		Flat Screen	
		Range (lb)	Average (lb)	Range (lb)	Average (lb)	Range (lb)	Average (lb)
Mineral spirits used in run[b]	100.0	0 - 1,005	425	0 - 2,754	51	399 - 1,508	635
Wasted mineral spirits (potential water emissions)[c]	6.2	0 - 62	26	0 - 170	2	24 - 93	40
Overprinted mineral spirit fugitives[d]	3.5	0 - 35	15	0 - 97	2	13 - 53	22
Tray and barrel fugitives[e]	0.3	0 - 2	2	0 - 9	0	1 - 4	2
Flashoff fugitives[e]	1.5	0 - 15	6	0 - 41	1	6 - 22	9
Dryer emissions[e]	88.5	0 - 889	375	0 - 2,436	46	353 - 1,337	562

[a] Length of run = 10,936 yd; fabric width = 1.25 yd; total fabric area = 13,634 yd^2; line speed = 44 yd/min; distance, printer to oven = 5.5 yd.
[b] Print paste used in run multiplied by mineral spirits added to print paste, weight percent.
[c] Estimate provided by industry contacts.
[d] Estimated on the basis of 1 in. of overprint on each side of fabric.
[e] Emission splits calculated from percentages provided by evaporation computations.

Table 4.11-4 (Metric And English Units). TYPICAL INSPECTION VALUES FOR MINERAL SPIRITS[a]

Parameter	Range
Specific gravity at 15°C (60°F)	0.778 - 0.805
Viscosity at 25°C (77°F)	0.83 - 0.95 cP
Flash point (closed cup)	41 - 45°C (105 - 113°F)
Aniline point	43 - 62°C (110 - 144°F)
Kauri-Butanol number	32 - 45
Distillation range	
Initial boiling points	157 - 166°C (315 - 330°F)
50 percent value	168 - 178°C (334 - 348°F)
Final boiling points	199 - 201°C (390 - 394°F)
Composition (%)	
Total saturates	81.5 - 92.3
Total aromatics	7.7 - 18.5
C_8 and higher	7.5 - 18.5

[a] References 2,4.

Two types of dryers are used for printed fabric, steam coil or natural gas fired dryers, through which the fabric is conveyed on belts, racks, etc., and steam cans, with which the fabric makes direct contact. Most screen printed fabrics and practically all printed knit fabrics and terry towels are dried with the first type of dryer, not to stress the fabric. Roller printed fabrics and apparel fabrics requiring soft handling are dried on steam cans, which have lower installation and operating costs and which dry the fabric more quickly than other dryers.

Figure 4.11-1 is a schematic diagram of the rotary screen printing process, with emission points indicated. The flat screen printing process is virtually identical. The symbols for fugitive VOC emissions to the atmosphere indicate mineral spirits evaporating from print paste during application to fabric before drying. The largest VOC emission source is the drying and curing oven stack, which vents evaporated solvents (mineral spirits and water) to the atmosphere. The symbol for fugitive VOC emissions to the waste water indicates print paste mineral spirits washed with water from the printing blanket (continuous belt) and discharged in waste water.

Figure 4.11-2 is a schematic diagram of a roller printing process in which all emissions are fugitive. Fugitive VOC emissions from the "back grey" (fabric backing material that absorbs excess print paste) in the illustrated process are emissions to the atmosphere because the back grey is dried before being washed. In processes where the back grey is washed before drying, most of the fugitive VOC emissions from the back grey will be discharged into the waste water. In some roller printing processes, steam cans for drying printed fabric are enclosed, and drying process emissions are vented directly to the atmosphere.

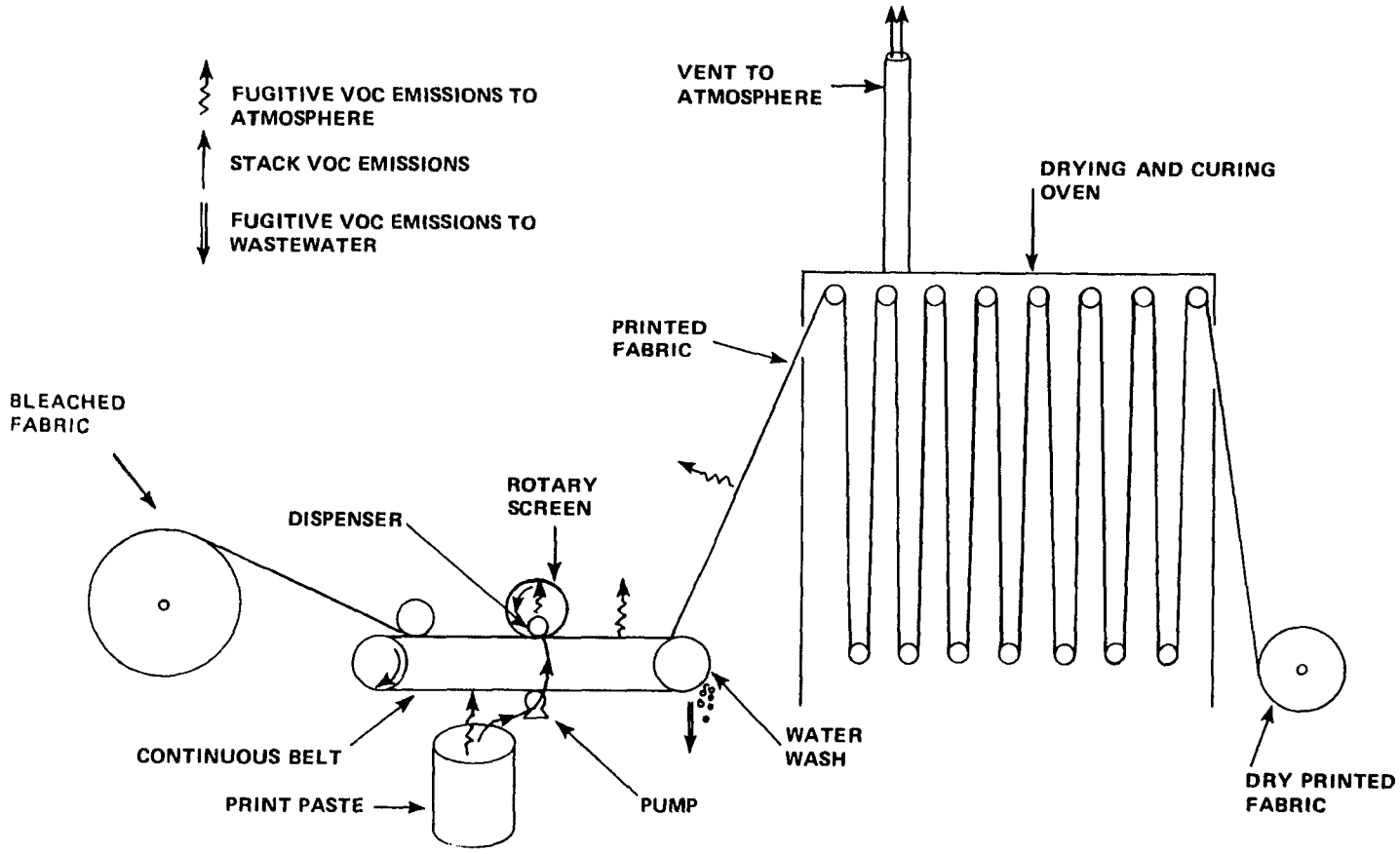

Figure 4.11-1. Schematic diagram of the rotary screen printing process, with fabric drying in a vented oven.

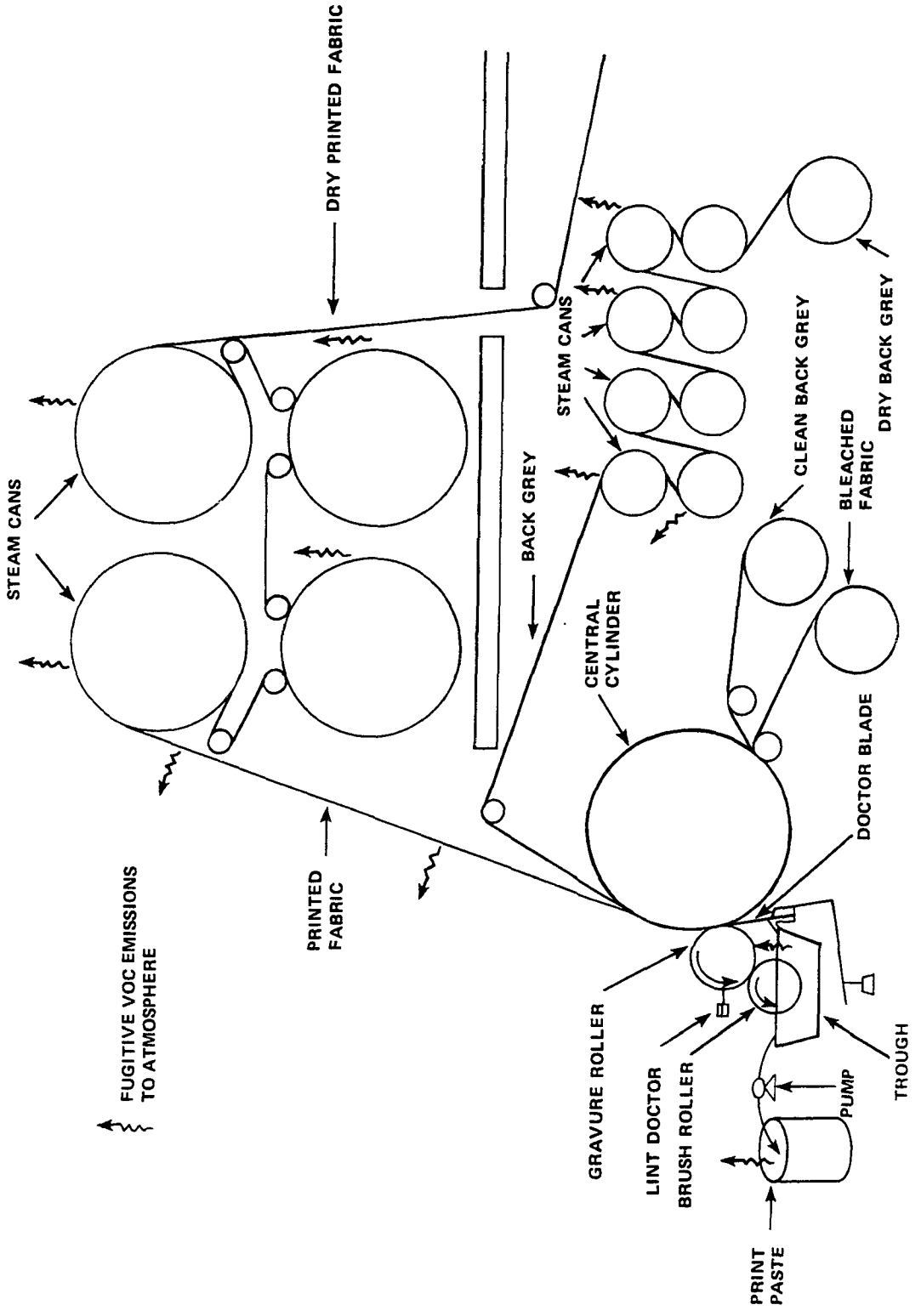

Figure 4.11-2. Schematic diagram of the roller printing process, with fabric drying on steam cans.

4.11.2 Emissions And Controls[1,3-12]

Presently there is no add-on emission control technology for organic solvent used in the textile fabric printing industry. Thermal incineration of oven exhaust has been evaluated in the Draft Background Information Document for New Source Performance Standard development[1] and has been found unaffordable for some fabric printers. The feasibility of using other types of add-on emission control equipment has not been fully evaluated. Significant organic solvent emissions reduction has been accomplished by reducing or eliminating the consumption of mineral spirit solvents. The use of aqueous or low organic solvent print pastes has increased during the past decade, because of the high price of organic solvents and higher energy costs associated with the use of higher solvent volumes. The only fabric printing applications presently requiring the use of large quantities of organic solvents are pigment printing of fashion or designer apparel fabric, and terry towels.

Table 4.11-5 presents average emission factors and ranges for each type of printing process and an average annual emission factor per print line, based on estimates submitted by individual fabric printers. No emission tests were done. VOC emission rates involve 3 parameters: organic solvent content of print pastes, consumption of print paste (a function of pattern coverage and fabric weight), and rate of fabric processing. With the quantity of fabric printed held constant, the lowest emission rate represents minimum organic solvent content print paste and minimum print paste consumption, and the maximum emission rate represents maximum organic solvent content print paste and maximum print paste consumption. The average emission rates shown for roller and rotary screen printing are based on the results of a VOC usage survey conducted by the American Textile Manufacturers Institute, Inc. (ATMI), in 1979. The average flat screen printing emission factor is based on information from 2 terry towel printers.

Although the average emission factors for roller and rotary screen printing are representative of the use of medium organic solvent content print pastes at average rates of print paste consumption, very little printing is actually done with medium organic solvent content pastes. The distribution of

Table 4.11-5 (Metric And English Units). TEXTILE FABRIC PRINTING ORGANIC EMISSION FACTORS[a]

EMISSION FACTOR RATING: C

VOC	Roller		Rotary Screen		Flat Screen[b]	
	Range	Average	Range	Average	Range	Average
kg/Mg fabric or lb/1000 lb fabric	0 - 348[c]	142[d]	0 - 945[c]	23[d]	51 - 191[c]	79[e]
Mg (ton)/yr/print line[c]		130[c] (139)		29[c] (31)		29[e] (31)

[a] Transfer printing, carpet printing, and printing of vinyl-coated cloth are specifically excluded from this compilation.
[b] Flat screen factors apply to terry towel printing. Rotary screen factors should be applied to flat screen printing of other types of fabric (e. g., sheeting, bottom weight apparel, etc.).
[c] Reference 13.
[d] Reference 5.
[e] Reference 6.

print paste use is bimodal, with the arithmetic average falling between the modes. Most fabric is printed with aqueous or low organic solvent print pastes. However, in applications where the use of organic solvents is beneficial, high organic solvent content print pastes are used to derive the full benefit of using organic solvents. The most accurate emissions data can be generated by obtaining organic solvent use data for a particular facility. The emission factors presented here should only be used to estimate actual process emissions.

References For Section 4.11

1. *Fabric Printing Industry: Background Information For Proposed Standards (Draft)*, EPA Contract No. 68-02-3056, Research Triangle Institute, Research Triangle Park, NC, April 21, 1981.

2. *Exxon Petroleum Solvents*, Lubetext DG-1P, Exxon Company, Houston, TX, 1979.

3. Memorandum from S. B. York, Research Triangle Institute, to Textile Fabric Printing AP-42 file, Office Of Air Quality Planning And Standards, U. S. Environmental Protection Agency, Research Triangle Park, NC, March 25, 1981.

4. C. Marsden, *Solvents Guide*, Interscience Publishers, New York, NY, 1963, p. 548.

5. Letter from W. H. Steenland, American Textile Manufacturers Institute, Inc., to Dennis Crumpler, U. S. Environmental Protection Agency, Research Triangle Park, NC, April 8, 1980.

6. Memorandum from S. B. York, Research Triangle Institute, to Textile Fabric Printing AP-42 File, Office Of Air Quality Planning And Standards, U. S. Environmental Protection Agency, Research Triangle Park, NC, March 12, 1981.

7. Letter from A. C. Lohr, Burlington Industries, to James Berry, U.S. Environmental Protection Agency, Research Triangle Park, NC, April 26, 1979.

8. Trip Report/Plant Visit To Fieldcrest Mills, Foremost Screen Print Plant, memorandum from S. B. York, Research Triangle Institute, to C. Gasperecz, U. S. Environmental Protection Agency, Research Triangle Park, NC, January 28, 1980.

9. Letter from T. E. Boyce, Fieldcrest Corporation, to S. B. York, Research Triangle Institute, Research Triangle Park, NC, January 23, 1980.

10. Telephone conversation, S. B. York, Research Triangle Institute, with Tom Boyce, Foremost Screen Print Plant, Stokesdale, NC, April 24, 1980.

11. "Average Weight And Width Of Broadwoven Fabrics (Gray)", *Current Industrial Report*, Publication No. MC-22T (Supplement), Bureau Of The Census, U. S. Department Of Commerce, Washington, DC, 1977.

12. "Sheets, Pillowcases, and Towels", *Current Industrial Report*, Publication No. MZ-23X, Bureau Of The Census, U. S. Department Of Commerce, Washington, DC, 1977.

13. Memorandum from S. B. York, Research Triangle Institute, to Textile Fabric Printing AP-42 File, Office Of Air Quality Planning And Standards, U. S. Environmental Protection Agency, Research Triangle Park, NC, April 3, 1981.

14. "Survey of Plant Capacity, 1977", *Current Industrial Report*, Publication No. DQ-C1(77)-1, Bureau Of The Census, U. S. Department Of Commerce, Washington, DC, August 1978.

5. PETROLEUM INDUSTRY

The petroleum industry involves the refining of crude petroleum and the processing of natural gas into a multitude of products, as well as the distribution and marketing of petroleum-derived products. The primary pollutant emitted is volatile organic compounds arising from leakage, venting, and evaporation of the raw materials and finished products. Significant amounts of sulfur oxides, hydrogen sulfide, particulate matter, and a number of toxic species can also be generated from operations specific to this industry. In addition, a wide variety of fuel combustion devices emits all of the criteria pollutants and a number of toxic species.

5.1 Petroleum Refining[1]

5.1.1 General Description

The petroleum refining industry converts crude oil into more than 2500 refined products, including liquefied petroleum gas, gasoline, kerosene, aviation fuel, diesel fuel, fuel oils, lubricating oils, and feedstocks for the petrochemical industry. Petroleum refinery activities start with receipt of crude for storage at the refinery, include all petroleum handling and refining operations, and they terminate with storage preparatory to shipping the refined products from the refinery.

The petroleum refining industry employs a wide variety of processes. A refinery's processing flow scheme is largely determined by the composition of the crude oil feedstock and the chosen slate of petroleum products. The example refinery flow scheme presented in Figure 5.1-1 shows the general processing arrangement used by refineries in the United States for major refinery processes. The arrangement of these processes will vary among refineries, and few, if any, employ all of these processes. Petroleum refining processes having direct emission sources are presented on the figure in bold-line boxes.

Listed below are 5 categories of general refinery processes and associated operations:

1. Separation processes
   a. Atmospheric distillation
   b. Vacuum distillation
   c. Light ends recovery (gas processing)
2. Petroleum conversion processes
   a. Cracking (thermal and catalytic)
   b. Reforming
   c. Alkylation
   d. Polymerization
   e. Isomerization
   f. Coking
   g. Visbreaking
3. Petroleum treating processes
   a. Hydrodesulfurization
   b. Hydrotreating
   c. Chemical sweetening
   d. Acid gas removal
   e. Deasphalting
4. Feedstock and product handling
   a. Storage
   b. Blending
   c. Loading
   d. Unloading
5. Auxiliary facilities
   a. Boilers
   b. Waste water treatment
   c. Hydrogen production
   d. Sulfur recovery plant

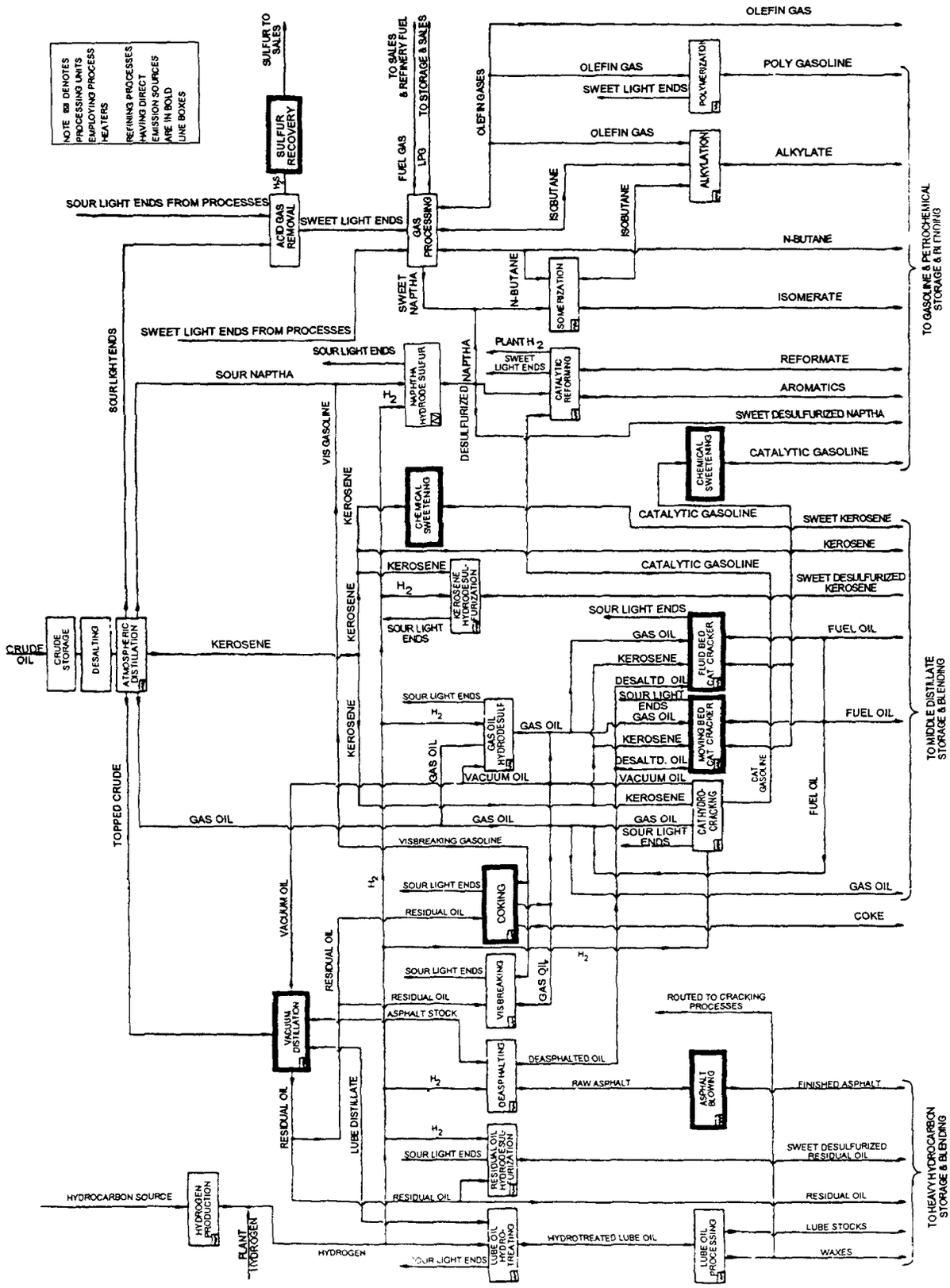

Figure 5.1-1. Schematic of an example integrated petroleum refinery.

e. Cooling towers
f. Blowdown system
g. Compressor engines

These refinery processes are defined below, and their emission characteristics and applicable emission control technology are discussed.

5.1.1.1 Separation Processes -

The first phase in petroleum refining operations is the separation of crude oil into its major constituents using 3 petroleum separation processes: atmospheric distillation, vacuum distillation, and light ends recovery (gas processing). Crude oil consists of a mixture of hydrocarbon compounds including paraffinic, naphthenic, and aromatic hydrocarbons with small amounts of impurities including sulfur, nitrogen, oxygen, and metals. Refinery separation processes separate these crude oil constituents into common boiling-point fractions.

5.1.1.2 Conversion Processes -

To meet the demands for high-octane gasoline, jet fuel, and diesel fuel, components such as residual oils, fuel oils, and light ends are converted to gasolines and other light fractions. Cracking, coking, and visbreaking processes are used to break large petroleum molecules into smaller ones. Polymerization and alkylation processes are used to combine small petroleum molecules into larger ones. Isomerization and reforming processes are applied to rearrange the structure of petroleum molecules to produce higher-value molecules of a similar molecular size.

5.1.1.3 Treating Processes -

Petroleum treating processes stabilize and upgrade petroleum products by separating them from less desirable products and by removing objectionable elements. Undesirable elements such as sulfur, nitrogen, and oxygen are removed by hydrodesulfurization, hydrotreating, chemical sweetening, and acid gas removal. Treating processes, employed primarily for the separation of petroleum products, include such processes as deasphalting. Desalting is used to remove salt, minerals, grit, and water from crude oil feedstocks before refining. Asphalt blowing is used for polymerizing and stabilizing asphalt to improve its weathering characteristics.

5.1.1.4 Feedstock And Product Handling -

The refinery feedstock and product handling operations consist of unloading, storage, blending, and loading activities.

5.1.1.5 Auxiliary Facilities -

A wide assortment of processes and equipment not directly involved in the refining of crude oil is used in functions vital to the operation of the refinery. Examples are boilers, waste water treatment facilities, hydrogen plants, cooling towers, and sulfur recovery units. Products from auxiliary facilities (clean water, steam, and process heat) are required by most process units throughout the refinery.

5.1.2 Process Emission Sources And Control Technology

This section presents descriptions of those refining processes that are significant air pollutant contributors. Process flow schemes, emission characteristics, and emission control technology are discussed for each process. Table 5.1-1 lists the emission factors for direct-process emissions in

Table 5.1-1 (Metric And English Units). EMISSION FACTORS FOR PETROLEUM REFINERIES[a]

Process	Particulate	Sulfur Oxides (as SO_2)	Carbon Monoxide	Total Hydro-carbons[b]	Nitrogen Oxides (as NO_2)	Aldehydes	Ammonia	EMISSION FACTOR RATING
Boilers and process heaters								
Fuel oil	See Section 1.3 - "Fuel Oil Combustion"							
Natural gas	See Section 1.4 - "Natural Gas Combustion"							
Fluid catalytic cracking units (FCC)[c]								
Uncontrolled								
kg/10^3 L fresh feed	0.695 (0.267 to 0.976)	1.413 (0.286 to 1.505)	39.2	0.630	0.204 (0.107 to 0.416)	0.054	0.155	B
lb/10^3 bbl fresh feed	242 (93 to 340)	493 (100 to 525)	13,700	220	71.0 (37.1 to 145.0)	19	54	B
Electrostatic precipitator and CO boiler								
kg/10^3 L fresh feed	0.128[d] (0.020 to 0.428)	1.413 (0.286 to 1.505)	Neg	Neg	0.204[e] (0.107 to 0.416)	Neg	Neg	B
lb/10^3 bbl fresh feed	45[d] (7 to 150)	493 (100 to 525)	Neg	Neg	71.0[e] (37.1 to 145.0)	Neg	Neg	B
Moving-bed catalytic cracking units[f]								
kg/10^3 L fresh feed	0.049	0.171	10.8	0.250	0.014	0.034	0.017	B
lb/10^3 bbl fresh feed	17	60	3,800	87	5	12	6	B
Fluid coking units[g]								
Uncontrolled								
kg/10^3 L fresh feed	1.50	ND	ND	ND	ND	ND	ND	C
lb/10^3 bbl fresh feed	523	ND	ND	ND	ND	ND	ND	C
Electrostatic precipitator and CO boiler								
kg/10^3 L fresh feed	0.0196	ND	Neg	Neg	ND	Neg	Neg	C
lb/10^3 bbl fresh feed	6.85	ND	Neg	Neg	ND	Neg	Neg	C

Table 5.1-1 (cont.).

Process	Particulate	Sulfur Oxides (as SO_2)	Carbon Monoxide	Total Hydro-carbons[b]	Nitrogen Oxides (as NO_2)	Aldehydes	Ammonia	EMISSION FACTOR RATING
Delayed coking units	ND	ND	ND	ND	ND	ND	ND	NA
Compressor engines[h]								
Reciprocating engines								
kg/10^3 m^3 gas burned	Neg	2s[j]	7.02	21.8	55.4	1.61	3.2	B
lb/10^3 ft^3 gas burned	Neg	2s	0.43	1.4	3.4	0.1	0.2	B
Gas turbines								
kg/10^3 m^3 gas burned	Neg	2s	1.94	0.28	4.7	ND	ND	B
lb/10^3 ft^3 gas burned	Neg	2s	0.12	0.02	0.3	ND	ND	B
Blowdown systems[k]								
Uncontrolled								
kg/10^3 L refinery feed	Neg	Neg	Neg	1,662	Neg	Neg	Neg	C
lb/10^3 bbl refinery feed	Neg	Neg	Neg	580	Neg	Neg	Neg	C
Vapor recovery system and flaring								
kg/10^3 L refinery feed	Neg	0.077	0.012	0.002	0.054	Neg	Neg	C
lb/10^3 bbl refinery feed	Neg	26.9	4.3	0.8	18.9	Neg	Neg	C
Vacuum distillation column condensers[m]								
Uncontrolled								
kg/10^3 L vacuum feed	Neg	Neg	Neg	0.14 (0 to 0.37)	Neg	Neg	Neg	C
lb/10^3 bbl vacuum feed	Neg	Neg	Neg	50 (0 to 130)	Neg	Neg	Neg	C
Controlled (vented to heater or incinerator)	Neg	Neg	Neg	Neg	Neg	Neg	Neg	C

Table 5.1-1 (cont.).

Process	Particulate	Sulfur Oxides (as SO_2)	Carbon Monoxide	Total Hydro-carbons[b]	Nitrogen Oxides (as NO_2)	Aldehydes	Ammonia	EMISSION FACTOR RATING
Claus plant and tail gas treatment	See Section 8.13 - "Sulfur Recovery"							

[a] Numbers in parentheses indicate range of values observed. Neg = negligible. ND = no data.
[b] Overall, less than 1 weight % of total hydrocarbon emissions is methane.
[c] References 2-8.
[d] Under the New Source Performance Standards, controlled FCC regenerators must have particulate emissions lower than 0.054 kg/10^3 L (19 lb/10^3 bbl) fresh feed.
[e] May be higher, from the combustion of ammonia.
[g] Reference 2.
[g] Reference 5.
[h] References 9-10.
[j] Based on 100% combustion of sulfur to SO_2. s = refinery gas sulfur content (in kg/1000 m^3 or lb/1000 ft^3, depending on desired units for emission factor).
[k] References 2,11.
[m] References 2,12-13. If refinery feed rate is known, rather than vacuum feed rate, assume vacuum feed is 36% of refinery feed. Refinery feed rate is defined as the crude oil feed rate to the atmospheric distillation column.

petroleum refineries. Factors are expressed in units of kilograms per 1000 liters (kg/10^3 L) or kilograms per 1000 cubic meters (kg/10^3 m^3) and pounds per 1000 barrels (lb/10^3 bbl) or pounds per 1000 cubic feet (lb/10^3 ft^3). The following process emission sources are discussed here:

1. Vacuum distillation
2. Catalytic cracking
3. Thermal cracking processes
4. Utility boilers
5. Heaters
6. Compressor engines
7. Blowdown systems
8. Sulfur recovery

5.1.2.1 Vacuum Distillation -

Topped crude withdrawn from the bottom of the atmospheric distillation column is composed of high boiling-point hydrocarbons. When distilled at atmospheric pressures, the crude oil decomposes and polymerizes and will foul equipment. To separate topped crude into components, it must be distilled in a vacuum column at a very low pressure and in a steam atmosphere.

In the vacuum distillation unit, topped crude is heated with a process heater to temperatures ranging from 370 to 425°C (700 to 800°F). The heated topped crude is flashed into a multitray vacuum distillation column operating at absolute pressures ranging from 350 to 1400 kilograms per square meter (kg/m^2) (0.5 to 2 pounds per square inch absolute [psia]). In the vacuum column, the topped crude is separated into common boiling-point fractions by vaporization and condensation. Stripping steam is normally injected into the bottom of the vacuum distillation column to assist the separation by lowering the effective partial pressures of the components. Standard petroleum fractions withdrawn from the vacuum distillation column include lube distillates, vacuum oil, asphalt stocks, and residual oils. The vacuum in the vacuum distillation column is usually maintained by the use of steam ejectors but may be maintained by the use of vacuum pumps.

The major sources of atmospheric emissions from the vacuum distillation column are associated with the steam ejectors or vacuum pumps. A major portion of the vapors withdrawn from the column by the ejectors or pumps is recovered in condensers. Historically, the noncondensable portion of the vapors has been vented to the atmosphere from the condensers. There are approximately 0.14 kg of noncondensable hydrocarbons per m^3 (50 lb/10^3 bbl) of topped crude processed in the vacuum distillation column.[2,12-13] A second source of atmospheric emissions from vacuum distillation columns is combustion products from the process heater. Process heater requirements for the vacuum distillation column are approximately 245 megajoules per cubic meter (MJ/m^3) (37,000 British thermal units per barrel [Btu/bbl]) of topped crude processed in the vacuum column. Process heater emissions and their control are discussed below. Fugitive hydrocarbon emissions from leaking seals and fittings are also associated with the vacuum distillation unit, but these are minimized by the low operating pressures and low vapor pressures in the unit. Fugitive emission sources are also discussed later.

Control technology applicable to the noncondensable emissions vented from the vacuum ejectors or pumps includes venting into blowdown systems or fuel gas systems, and incineration in furnaces or waste heat boilers.[2,12-13] These control techniques are generally greater than 99 percent efficient in the control of hydrocarbon emissions, but they also contribute to the emission of combustion products.

5.1.2.2 Catalytic Cracking -

Catalytic cracking, using heat, pressure, and catalysts, converts heavy oils into lighter products with product distributions favoring the more valuable gasoline and distillate blending components. Feedstocks are usually gas oils from atmospheric distillation, vacuum distillation, coking, and deasphalting processes. These feedstocks typically have a boiling range of 340 to 540°C (650 to 1000°F). All of the catalytic cracking processes in use today can be classified as either fluidized-bed or moving-bed units.

5.1.2.2.1 Fluidized-bed Catalytic Cracking (FCC) -

The FCC process uses a catalyst in the form of very fine particles that act as a fluid when aerated with a vapor. Fresh feed is preheated in a process heater and introduced into the bottom of a vertical transfer line or riser with hot regenerated catalyst. The hot catalyst vaporizes the feed, bringing both to the desired reaction temperature, 470 to 525°C (880 to 980°F) The high activity of modern catalysts causes most of the cracking reactions to take place in the riser as the catalyst and oil mixture flows upward into the reactor. The hydrocarbon vapors are separated from the catalyst particles by cyclones in the reactor. The reaction products are sent to a fractionator for separation.

The spent catalyst falls to the bottom of the reactor and is steam stripped as it exits the reactor bottom to remove absorbed hydrocarbons. The spent catalyst is then conveyed to a regenerator. In the regenerator, coke deposited on the catalyst as a result of the cracking reactions is burned off in a controlled combustion process with preheated air. Regenerator temperature is usually 590 to 675°C (1100 to 1250°F). The catalyst is then recycled to be mixed with fresh hydrocarbon feed.

5.1.2.2.2 Moving-bed Catalytic Cracking-

In the moving-bed system, typified by the Thermafor Catalytic Cracking (TCC) units, catalyst beads (~0.5 centimeters [cm] [0.2 inches (in.)]) flow into the top of the reactor, where they contact a mixed-phase hydrocarbon feed. Cracking reactions take place as the catalyst and hydrocarbons move concurrently downward through the reactor to a zone where the catalyst is separated from the vapors. The gaseous reaction products flow out of the reactor to the fractionation section of the unit. The catalyst is steam stripped to remove any adsorbed hydrocarbons. It then falls into the regenerator, where coke is burned from the catalyst with air. The regenerated catalyst is separated from the flue gases and recycled to be mixed with fresh hydrocarbon feed. The operating temperatures of the reactor and regenerator in the TCC process are comparable to those in the FCC process.

Air emissions from catalytic cracking processes are (1) combustion products from process heaters and (2) flue gas from catalyst regeneration. Emissions from process heaters are discussed below. Emissions from the catalyst regenerator include hydrocarbons, oxides of sulfur, ammonia, aldehydes, oxides of nitrogen, cyanides, carbon monoxide (CO), and particulates (Table 5.1-1). The particulate emissions from FCC units are much greater than those from TCC units because of the higher catalyst circulation rates used.[2-3,5]

FCC particulate emissions are controlled by cyclones and/or electrostatic precipitators. Particulate control efficiencies are as high as 80 to 85 percent.[3,5] Carbon monoxide waste heat boilers reduce the CO and hydrocarbon emissions from FCC units to negligible levels.[3] TCC catalyst regeneration produces similar pollutants to FCC units, but in much smaller quantities (Table 5.1-1). The particulate emissions from a TCC unit are normally controlled by high-efficiency cyclones. Carbon monoxide and hydrocarbon emissions from a TCC unit are incinerated to negligible levels by passing the flue gases through a process heater firebox or smoke plume burner. In some installations, sulfur oxides are removed by passing the regenerator flue gases through a water or caustic scrubber.[2-3,5]

5.1.2.3 Thermal Cracking -

Thermal cracking processes include visbreaking and coking, which break heavy oil molecules by exposing them to high temperatures.

5.1.2.3.1 Visbreaking -

Topped crude or vacuum residuals are heated and thermally cracked (455 to 480°C, 3.5 to 17.6 kg/cm^2 [850 to 900°F, 50 to 250 pounds per square inch gauge (psig)]) in the visbreaker furnace to reduce the viscosity, or pour point, of the charge. The cracked products are quenched with gas oil and flashed into a fractionator. The vapor overhead from the fractionator is separated into light distillate products. A heavy distillate recovered from the fractionator liquid can be used as either a fuel oil blending component or catalytic cracking feed.

5.1.2.3.2 Coking -

Coking is a thermal cracking process used to convert low value residual fuel oil to higher-value gas oil and petroleum coke. Vacuum residuals and thermal tars are cracked in the coking process at high temperature and low pressure. Products are petroleum coke, gas oils, and lighter petroleum stocks. Delayed coking is the most widely used process today, but fluid coking is expected to become an important process in the future.

In the delayed coking process, heated charge stock is fed into the bottom of a fractionator, where light ends are stripped from the feed. The stripped feed is then combined with recycle products from the coke drum and rapidly heated in the coking heater to a temperature of 480 to 590°C (900 to 1100°F). Steam injection is used to control the residence time in the heater. The vapor-liquid feed leaves the heater, passing to a coke drum where, with controlled residence time, pressure (1.8 to 2.1 kg/cm^2 [25 to 30 psig]), and temperature (400°C [750°F]), it is cracked to form coke and vapors. Vapors from the drum return to the fractionator, where the thermal cracking products are recovered.

In the fluid coking process, typified by Flexicoking, residual oil feeds are injected into the reactor, where they are thermally cracked, yielding coke and a wide range of vapor products. Vapors leave the reactor and are quenched in a scrubber, where entrained coke fines are removed. The vapors are then fractionated. Coke from the reactor enters a heater and is devolatilized. The volatiles from the heater are treated for fines and sulfur removal to yield a particulate-free, low-sulfur fuel gas. The devolatilized coke is circulated from the heater to a gasifier where 95 percent of the reactor coke is gasified at high temperature with steam and air or oxygen. The gaseous products and coke from the gasifier are returned to the heater to supply heat for the devolatilization. These gases exit the heater with the heater volatiles through the same fines and sulfur removal processes.

From available literature, it is unclear what emissions are released and where they are released. Air emissions from thermal cracking processes include coke dust from decoking operations, combustion gases from the visbreaking and coking process heaters, and fugitive emissions. Emissions from the process heaters are discussed below. Fugitive emissions from miscellaneous leaks are significant because of the high temperatures involved, and are dependent upon equipment type and configuration, operating conditions, and general maintenance practices. Fugitive emissions are also discussed below. Particulate emissions from delayed coking operations are potentially very significant. These emissions are associated with removing the coke from the coke drum and subsequent handling and storage operations. Hydrocarbon emissions are also associated with cooling and venting the coke drum before coke removal. However, comprehensive data for delayed coking emissions have not been included in available literature.[4-5]

Particulate emission control is accomplished in the decoking operation by wetting down the coke.[5] Generally, there is no control of hydrocarbon emissions from delayed coking. However, some facilities are now collecting coke drum emissions in an enclosed system and routing them to a refinery flare.[4-5]

5.1.2.4 Utilities Plant -

The utilities plant supplies the steam necessary for the refinery. Although the steam can be used to produce electricity by throttling through a turbine, it is primarily used for heating and separating hydrocarbon streams. When used for heating, the steam usually heats the petroleum indirectly in heat exchangers and returns to the boiler. In direct contact operations, the steam can serve as a stripping medium or a process fluid. Steam may also be used in vacuum ejectors to produce a vacuum. Boiler emissions and applicable emission control technology are discussed in much greater detail in Chapter 1.

5.1.2.5 Sulfur Recovery Plant -

Sulfur recovery plants are used in petroleum refineries to convert the hydrogen sulfide (H_2S) separated from refinery gas streams into the more disposable byproduct, elemental sulfur. Emissions from sulfur recovery plants and their control are discussed in Section 8.13, "Sulfur Recovery".

5.1.2.6 Blowdown System -

The blowdown system provides for the safe disposal of hydrocarbons (vapor and liquid) discharged from pressure relief devices.

Most refining processing units and equipment subject to planned or unplanned hydrocarbon discharges are manifolded into a collection unit, called blowdown system. By using a series of flash drums and condensers arranged in decreasing pressure, blowdown material is separated into vapor and liquid cuts. The separated liquid is recycled into the refinery. The gaseous cuts can either be smokelessly flared or recycled.

Uncontrolled blowdown emissions primarily consist of hydrocarbons but can also include any of the other criteria pollutants. The emission rate in a blowdown system is a function of the amount of equipment manifolded into the system, the frequency of equipment discharges, and the blowdown system controls.

Emissions from the blowdown system can be effectively controlled by combustion of the noncondensables in a flare. To obtain complete combustion or smokeless burning (as required by most states), steam is injected in the combustion zone of the flare to provide turbulence and air. Steam injection also reduces emissions of nitrogen oxides by lowering the flame temperature. Controlled emissions are listed in Table 5.1-1.[2,11]

5.1.2.7 Process Heaters -

Process heaters (furnaces) are used extensively in refineries to supply the heat necessary to raise the temperature of feed materials to reaction or distillation level. They are designed to raise petroleum fluid temperatures to a maximum of about 510°C (950°F). The fuel burned may be refinery gas, natural gas, residual fuel oils, or combinations, depending on economics, operating conditions, and emission requirements. Process heaters may also use CO-rich regenerator flue gas as fuel.

All the criteria pollutants are emitted from process heaters. The quantity of these emissions is a function of the type of fuel burned, the nature of the contaminants in the fuel, and the heat duty of the furnace. Sulfur oxides can be controlled by fuel desulfurization or flue gas treatment. Carbon monoxide and hydrocarbons can be controlled by more combustion efficiency. Currently, 4 general techniques or modifications for the control of nitrogen oxides are being investigated: combustion modification, fuel modification, furnace design, and flue gas treatment. Several of these techniques are being applied to large utility boilers, but their applicability to process heaters has not been established.[2,14]

5.1.2.8 Compressor Engines -

Many older refineries run high-pressure compressors with reciprocating and gas turbine engines fired with natural gas. Natural gas has usually been a cheap, abundant source of energy. Examples of refining units operating at high pressure include hydrodesulfurization, isomerization, reforming, and hydrocracking. Internal combustion engines are less reliable and harder to maintain than are steam engines or electric motors. For this reason, and because of increasing natural gas costs, very few such units have been installed in the last few years.

The major source of emissions from compressor engines is combustion products in the exhaust gas. These emissions include CO, hydrocarbons, nitrogen oxides, aldehydes, and ammonia. Sulfur oxides may also be present, depending on the sulfur content of the natural gas. All these emissions are significantly higher in exhaust from reciprocating engines than from turbine engines.

The major emission control technique applied to compressor engines is carburetion adjustment similar to that applied on automobiles. Catalyst systems similar to those of automobiles may also be effective in reducing emissions, but their use has not been reported.

5.1.2.9 Sweetening -

Sweetening of distillates is accomplished by the conversion of mercaptans to alkyl disulfides in the presence of a catalyst. Conversion may be followed by an extraction step for removal of the alkyl disulfides. In the conversion process, sulfur is added to the sour distillate with a small amount of caustic and air. The mixture is then passed upward through a fixed-bed catalyst, counter to a flow of caustic entering at the top of the vessel. In the conversion and extraction process, the sour distillate is washed with caustic and then is contacted in the extractor with a solution of catalyst and caustic. The extracted distillate is then contacted with air to convert mercaptans to disulfides. After oxidation, the distillate is settled, inhibitors are added, and the distillate is sent to storage. Regeneration is accomplished by mixing caustic from the bottom of the extractor with air and then separating the disulfides and excess air.

The major emission problem is hydrocarbons from contact of the distillate product and air in the "air blowing" step. These emissions are related to equipment type and configuration, as well as to operating conditions and maintenance practices.[4]

5.1.2.10 Asphalt Blowing -

The asphalt blowing process polymerizes asphaltic residual oils by oxidation, increasing their melting temperature and hardness to achieve an increased resistance to weathering. The oils, containing a large quantity of polycyclic aromatic compounds (asphaltic oils), are oxidized by blowing heated air through a heated batch mixture or, in a continuous process, by passing hot air countercurrent to the oil flow. The reaction is exothermic, and quench steam is sometimes needed for temperature control. In some cases, ferric chloride or phosphorus pentoxide is used as a catalyst to increase the reaction rate and to impart special characteristics to the asphalt.

Air emissions from asphalt blowing are primarily hydrocarbon vapors vented with the blowing air. The quantities of emissions are small because of the prior removal of volatile hydrocarbons in the distillation units, but the emissions may contain hazardous polynuclear organics. Emissions are 30 kg/megagram (Mg) (60 lb/ton) of asphalt.[13] Emissions from asphalt blowing can be controlled to negligible levels by vapor scrubbing, incineration, or both.[4,13]

5.1.3 Fugitive Emissions And Controls

Fugitive emission sources include leaks of hydrocarbon vapors from process equipment and evaporation of hydrocarbons from open areas, rather than through a stack or vent. Fugitive emission sources include valves of all types, flanges, pump and compressor seals, process drains, cooling towers, and oil/water separators. Fugitive emissions are attributable to the evaporation of leaked or spilled petroleum liquids and gases. Normally, control of fugitive emissions involves minimizing leaks and spills through equipment changes, procedure changes, and improved monitoring, housekeeping, and maintenance practices. Controlled and uncontrolled fugitive emission factors for the following sources are listed in Table 5.1-2:

- Oil/water separators (waste water treatment)
- Storage
- Transfer operations
- Cooling towers

Emission factors for fugitive leaks from the following types of process equipment can be found in *Protocol For Equipment Leak Emission Estimates*, EPA-453/R-93-026, June 1993, or subsequent updates:

- Valves (pipeline, open ended, vessel relief)
- Flanges
- Seals (pump, compressor)
- Process drains

5.1.3.1 Valves, Flanges, Seals, And Drains -

For these sources, a very high correlation has been found between mass emission rates and the type of stream service in which the sources are employed. The four stream service types are (1) hydrocarbon gas/vapor streams (including gas streams with up to 50 percent hydrogen by volume), (2) light liquid and gas/liquid streams, (3) kerosene and heavier liquid streams (includes all crude oils), and (4) gas streams containing more than 50 percent hydrogen by volume. It is found that sources in gas/vapor stream service have higher emission rates than those in heavier stream service. This trend is especially pronounced for valves and pump seals. The size of valves, flanges, pump seals, compressor seals, relief valves, and process drains does not affect their leak rates.[17] The emission factors are independent of process unit or refinery throughput.

Valves, because of their number and relatively high emission factor, are the major emission source. This conclusion is based on an analysis of a hypothetical refinery coupled with the emission rates. The total quantity of fugitive VOC emissions in a typical oil refinery with a capacity of 52,500 m^3 (330,000 bbl) per day is estimated as 20,500 kg (45,000 lb) per day (see Table 5.1-3). This estimate is based on a typical late 1970s refinery without a leak inspection and maintenance (I/M) program. See the *Protocol* document for details on how to estimate emissions for a specific refinery.

Table 5.1-2 (Metric And English Units). FUGITIVE EMISSION FACTORS FOR PETROLEUM REFINERIES[a]

EMISSION FACTOR RATING: D

Emission Source	Emission Factor Units	Emission Factors		Applicable Control Technology
		Uncontrolled Emissions	Controlled Emissions	
Cooling towers[b]	kg/10^6 L cooling water	0.7	0.08	Minimization of hydrocarbon leaks into cooling water system; monitoring of cooling water for hydrocarbons
	lb/10^6 gal cooling water	6	0.7	Minimization of hydrocarbon leaks into cooling water system; monitoring of cooling water for hydrocarbons
Oil/water separators[c]	kg/10^3 L waste water	0.6	0.024	Covered separators and/or vapor recovery systems
	lb/10^3 gal waste water	5	0.2	Covered separators and/or vapor recovery systems
Storage	See Chapter 7 - Liquid Storage Tanks			
Loading	See Section 5.2 - Transportation And Marketing Of Petroleum Liquids			

[a] References 2,4,12-13.

[b] If cooling water rate is unknown (in liters or gallons) assume it is 40 times the refinery feed rate (in liters or gallons). Refinery feed rate is defined as the crude oil feed rate to the atmospheric distillation column. 1 bbl (oil) = 42 gallons (gal), 1 m^3 = 1000 L.

[c] If waste water flow rate to oil/water separators is unknown (in liters or gallons) assume it is 0.95 times the refinery feed rate (in liters or gallons). Refinery feed rate is defined as the crude oil feed rate to the atmospheric distillation column. 1 bbl (oil) = 42 gal, 1 m^3 = 1000 L.

5.1.3.2 Storage -

All refineries have a feedstock and product storage area, termed a "tank farm", which provides surge storage capacity to ensure smooth, uninterrupted refinery operations. Individual storage tank capacities range from less than 160 m^3 to more than 79,500 m^3 (1,000 to 500,000 bbl). Storage tank designs, emissions, and emission control technology are discussed in detail in AP-42 Chapter 7, and the *TANKS* software program is available to perform the emissions calculations, if desired.

Table 5.1-3 (Metric And English Units). FUGITIVE VOC EMISSIONS FROM AN UNCONTROLLED OIL REFINERY OF 52,500 m^3/day (330,000 bbl/day) CAPACITY[a]

Source	Number	VOC Emissions	
		kg/day	lb/day
Valves	11,500	3,100	6,800
Flanges	46,500	300	600
Pump seals	350	590	1,300
Compressor seals	70	500	1,100
Relief valves	100	200	500
Drains	650	450	1,000
Cooling towers[b]	1	730	1,600
Oil/water separators (uncovered)[b]	1	14,600	32,100
TOTAL	—	20,500	45,000

[a] Reference 17.
[b] Based on limited data.

5.1.3.3 Transfer Operations -

Although most refinery feedstocks and products are transported by pipeline, some are transported by trucks, rail cars, and marine vessels. They are transferred to and from these transport vehicles in the refinery tank farm area by specialized pumps and piping systems. The emissions from transfer operations and applicable emission control technology are discussed in much greater detail in Section 5.2, "Transportation And Marketing Of Petroleum Liquids".

5.1.3.4 Waste Water Treatment Plant -

All refineries employ some form of waste water treatment so water effluents can safely be returned to the environment or reused in the refinery. The design of waste water treatment plants is complicated by the diversity of refinery pollutants, including oil, phenols, sulfides, dissolved solids, and toxic chemicals. Although the treatment processes employed by refineries vary greatly, they generally include neutralizers, oil/water separators, settling chambers, clarifiers, dissolved air flotation systems, coagulators, aerated lagoons, and activated sludge ponds. Refinery water effluents are collected from various processing units and are conveyed through sewers and ditches to the treatment plant. Most of the treatment occurs in open ponds and tanks.

The main components of atmospheric emissions from waste water treatment plants are fugitive VOCs and dissolved gases that evaporate from the surfaces of waste water residing in open process drains, separators, and ponds (Table 5.1-2). Treatment processes that involve extensive contact of waste water and air, such as aeration ponds and dissolved air flotation, have an even greater potential for atmospheric emissions. Section 4.3, "Waste Water Collection, Treatment And Storage", discusses estimation techniques for such water treatment operations. *WATER8* and *SIMS* software models are available to perform the calculations.

The control of waste water treatment plant emissions involves covering systems where emission generation is greatest (such as oil/water separators and settling basins) and removing dissolved gases from water streams with sour water strippers and phenol recovery units before their contact with the atmosphere. These control techniques potentially can achieve greater than 90 percent reduction of waste water system emissions.[13]

5.1.3.5 Cooling Towers -

Cooling towers are used extensively in refinery cooling water systems to transfer waste heat from the cooling water to the atmosphere. The only refineries not employing cooling towers are those with once-through cooling. The increasing scarcity of a large water supply required for once-through cooling is contributing to the disappearance of that form of refinery cooling. In the cooling tower, warm cooling water returning from refinery processes is contacted with air by cascading through packing, Cooling water circulation rates for refineries commonly range from 7 to 70 L/minute per m^3/day (0.3 to 3.0 gal/minute per bbl/day) of refinery capacity.[2,16]

Atmospheric emissions from the cooling tower consist of fugitive VOCs and gases stripped from the cooling water as the air and water come into contact. These contaminants enter the cooling water system from leaking heat exchangers and condensers. Although the predominant contaminants in cooling water are VOCs, dissolved gases such as H_2S and ammonia may also be found (see Table 5.1-2).[2,4,17]

Control of cooling tower emissions is accomplished by reducing contamination of cooling water through the proper maintenance of heat exchangers and condensers. The effectiveness of cooling tower controls is highly variable, depending on refinery configuration and existing maintenance practices.[4]

References For Section 5.1

1. C. E. Burklin, *et al.*, *Revision Of Emission Factors For Petroleum Refining*, EPA-450/3-77-030, U. S. Environmental Protection Agency, Research Triangle Park, NC, October 1977.

2. *Atmospheric Emissions From Petroleum Refineries: A Guide For Measurement And Control*, PHS No. 763, Public Health Service, U. S. Department Of Health And Human Services, Washington, DC, 1960.

3. *Background Information For Proposed New Source Standards: Asphalt Concrete Plants, Petroleum Refineries, Storage Vessels, Secondary Lead Smelters And Refineries, Brass Or Bronze Ingot Production Plants, Iron And Steel Plants, Sewage Treatment Plants*, APTD-1352a, U. S. Environmental Protection Agency, Research Triangle Park, NC, 1973.

4. *Air Pollution Engineering Manual, Second Edition*, AP-40, U. S. Environmental Protection Agency, Research Triangle Park, NC, 1973. Out of Print.

5. Ben G. Jones, "Refinery Improves Particulate Control", *Oil And Gas Journal*, *69*(26):60-62, June 28, 1971.

6. "Impurities In Petroleum", *Petreco Manual*, Petrolite Corp., Long Beach, CA, 1958.

7. *Control Techniques For Sulfur Oxide In Air Pollutants*, AP-52, U. S. Environmental Protection Agency, Research Triangle Park, NC, January 1969.

8. H. N. Olson and K. E. Hutchinson, "How Feasible Are Giant, One-train Refineries?", *Oil And Gas Journal, 70*(1):39-43, January 3, 1972.

9. C. M. Urban and K. J. Springer, *Study Of Exhaust Emissions From Natural Gas Pipeline Compressor Engines*, American Gas Association, Arlington, VA, February 1975.

10. H. E. Dietzmann and K. J. Springer, *Exhaust Emissions From Piston And Gas Turbine Engines Used In Natural Gas Transmission*, American Gas Association, Arlington, VA, January 1974.

11. M. G. Klett and J. B. Galeski, *Flare Systems Study*, EPA-600/2-76-079, U. S. Environmental Protection Agency, Cincinnati, OH, March 1976.

12. *Evaporation Loss In The Petroleum Industry, Causes And Control*, API Bulletin 2513, American Petroleum Institute, Washington, DC, 1959.

13. *Hydrocarbon Emissions From Refineries*, API Publication No. 928, American Petroleum Institute, Washington, DC, 1973.

14. R. A. Brown, *et al., Systems Analysis Requirements For Nitrogen Oxide Control Of Stationary Sources*, EPA-650/2-74-091, U. S. Environmental Protection Agency, Cincinnati, OH, 1974.

15. R. P. Hangebrauck, *et al., Sources Of Polynuclear Hydrocarbons In The Atmosphere*, 999-AP-33, U. S. Environmental Protection Agency, Research Triangle Park, NC, 1967.

16. W. S. Crumlish, "Review Of Thermal Pollution Problems, Standards, And Controls At The State Government Level", Presented at the Cooling Tower Institute Symposium, New Orleans, LA, January 30, 1966.

17. *Assessment Of Atmospheric Emissions From Petroleum Refining*, EPA-600/2-80-075a through 075d, U. S. Environmental Protection Agency, Cincinnati, OH, 1980.

5.2 Transportation And Marketing Of Petroleum Liquids[1-3]

5.2.1 General

The transportation and marketing of petroleum liquids involve many distinct operations, each of which represents a potential source of evaporation loss. Crude oil is transported from production operations to a refinery by tankers, barges, rail tank cars, tank trucks, and pipelines. Refined petroleum products are conveyed to fuel marketing terminals and petrochemical industries by these same modes. From the fuel marketing terminals, the fuels are delivered by tank trucks to service stations, commercial accounts, and local bulk storage plants. The final destination for gasoline is usually a motor vehicle gasoline tank. Similar distribution paths exist for fuel oils and other petroleum products. A general depiction of these activities is shown in Figure 5.2-1.

5.2.2 Emissions And Controls

Evaporative emissions from the transportation and marketing of petroleum liquids may be considered, by storage equipment and mode of transportation used, in four categories:

1. Rail tank cars, tank trucks, and marine vessels: loading, transit, and ballasting losses.
2. Service stations: bulk fuel drop losses and underground tank breathing losses.
3. Motor vehicle tanks: refueling losses.
4. Large storage tanks: breathing, working, and standing storage losses. (See Chapter 7, "Liquid Storage Tanks".)

Evaporative and exhaust emissions are also associated with motor vehicle operation, and these topics are discussed in AP-42 *Volume II: Mobile Sources.*

5.2.2.1 Rail Tank Cars, Tank Trucks, And Marine Vessels -

Emissions from these sources are from loading losses, ballasting losses, and transit losses.

5.2.2.1.1 Loading Losses -

Loading losses are the primary source of evaporative emissions from rail tank car, tank truck, and marine vessel operations. Loading losses occur as organic vapors in "empty" cargo tanks are displaced to the atmosphere by the liquid being loaded into the tanks. These vapors are a composite of (1) vapors formed in the empty tank by evaporation of residual product from previous loads, (2) vapors transferred to the tank in vapor balance systems as product is being unloaded, and (3) vapors generated in the tank as the new product is being loaded. The quantity of evaporative losses from loading operations is, therefore, a function of the following parameters:

- Physical and chemical characteristics of the previous cargo;
- Method of unloading the previous cargo;
- Operations to transport the empty carrier to a loading terminal;
- Method of loading the new cargo; and
- Physical and chemical characteristics of the new cargo.

The principal methods of cargo carrier loading are illustrated in Figure 5.2-2, Figure 5.2-3, and Figure 5.2-4. In the splash loading method, the fill pipe dispensing the cargo is lowered only part way into the cargo tank. Significant turbulence and vapor/liquid contact occur during the splash

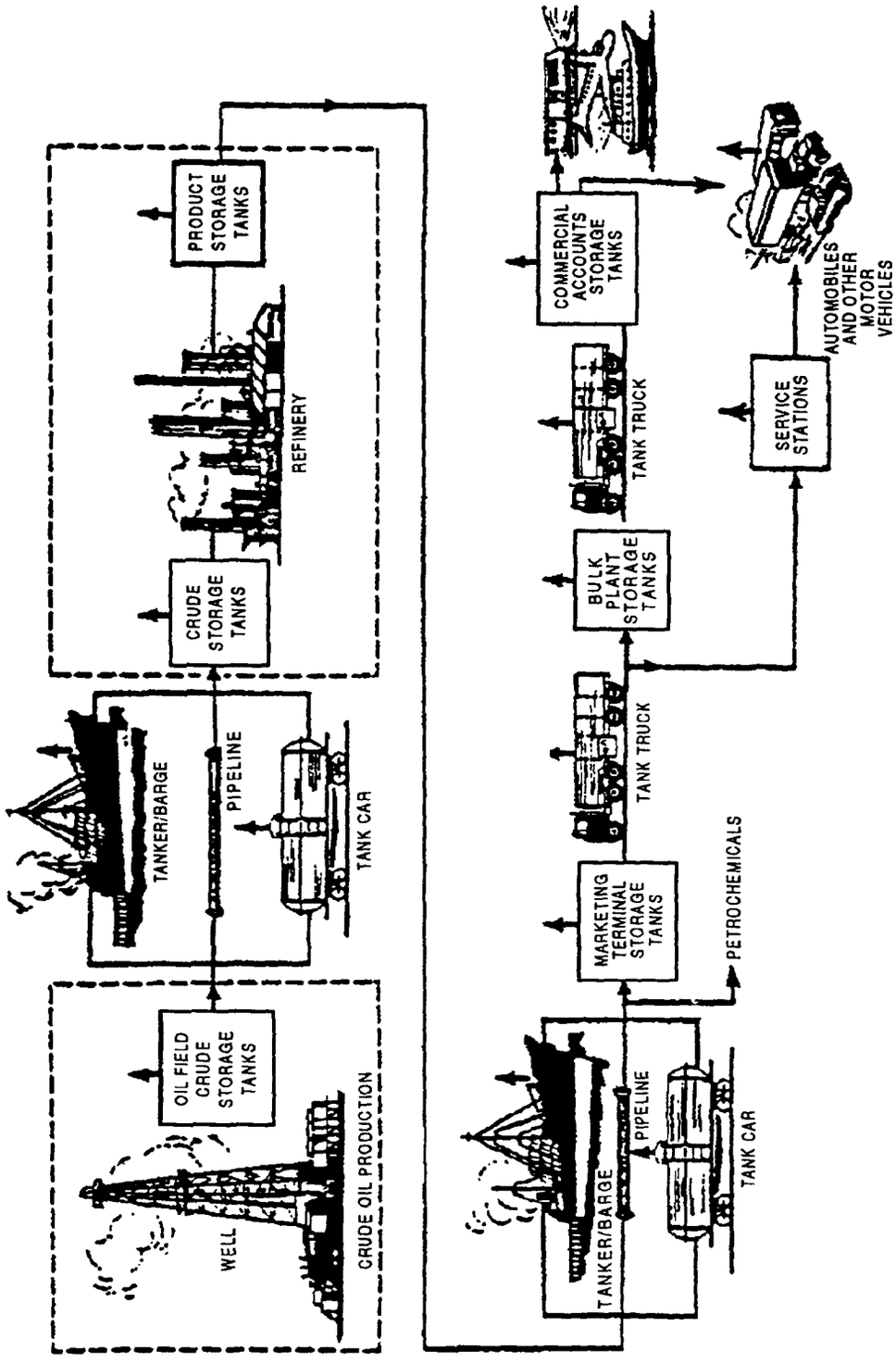

Figure 5.2-1. Flow sheet of petroleum production, refining, and distribution systems. (Points of organic emissions are indicated by vertical arrows.)

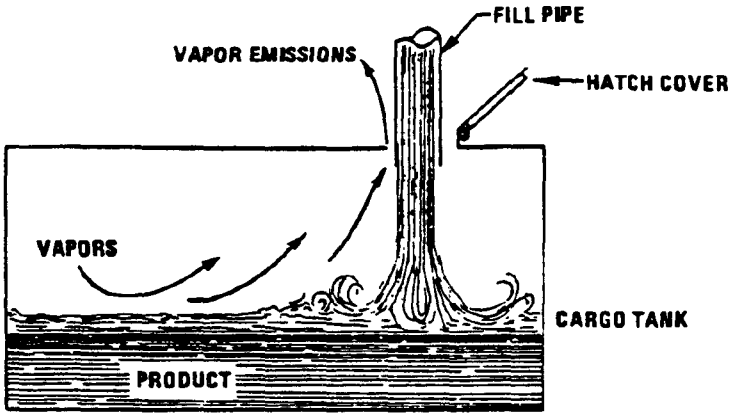

Figure 5.2-2. Splash loading method.

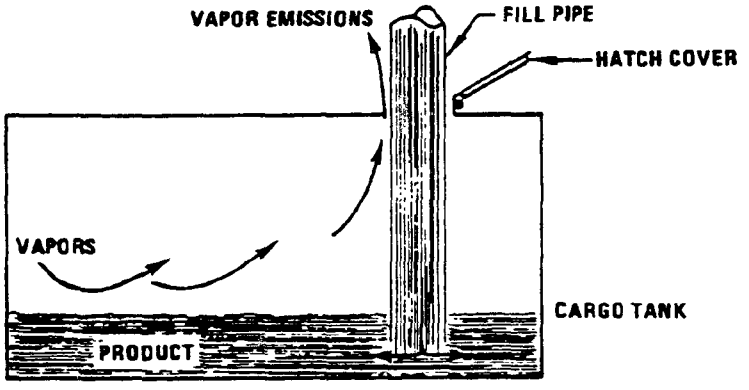

Figure 5.2-3. Submerged fill pipe.

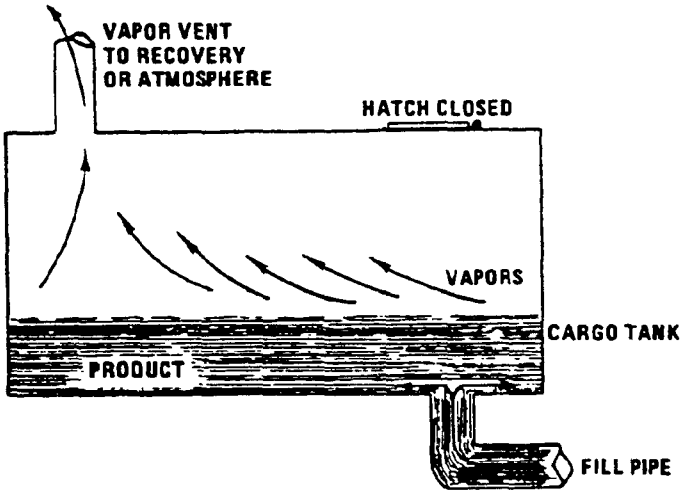

Figure 5.2-4. Bottom loading.

loading operation, resulting in high levels of vapor generation and loss. If the turbulence is great enough, liquid droplets will be entrained in the vented vapors.

A second method of loading is submerged loading. Two types are the submerged fill pipe method and the bottom loading method. In the submerged fill pipe method, the fill pipe extends almost to the bottom of the cargo tank. In the bottom loading method, a permanent fill pipe is attached to the cargo tank bottom. During most of submerged loading by both methods, the fill pipe opening is below the liquid surface level. Liquid turbulence is controlled significantly during submerged loading, resulting in much lower vapor generation than encountered during splash loading.

The recent loading history of a cargo carrier is just as important a factor in loading losses as the method of loading. If the carrier has carried a nonvolatile liquid such as fuel oil, or has just been cleaned, it will contain vapor-free air. If it has just carried gasoline and has not been vented, the air in the carrier tank will contain volatile organic vapors, which will be expelled during the loading operation along with newly generated vapors.

Cargo carriers are sometimes designated to transport only one product, and in such cases are practicing "dedicated service". Dedicated gasoline cargo tanks return to a loading terminal containing air fully or partially saturated with vapor from the previous load. Cargo tanks may also be "switch loaded" with various products, so that a nonvolatile product being loaded may expel the vapors remaining from a previous load of a volatile product such as gasoline. These circumstances vary with the type of cargo tank and with the ownership of the carrier, the petroleum liquids being transported, geographic location, and season of the year.

One control measure for vapors displaced during liquid loading is called "vapor balance service", in which the cargo tank retrieves the vapors displaced during product unloading at bulk plants or service stations and transports the vapors back to the loading terminal. Figure 5.2-5 shows a tank truck in vapor balance service filling a service station underground tank and taking on displaced gasoline vapors for return to the terminal. A cargo tank returning to a bulk terminal in vapor balance service normally is saturated with organic vapors, and the presence of these vapors at the start of submerged loading of the tanker truck results in greater loading losses than encountered during nonvapor balance, or "normal", service. Vapor balance service is usually not practiced with marine vessels, although some vessels practice emission control by means of vapor transfer within their own cargo tanks during ballasting operations, discussed below.

Emissions from loading petroleum liquid can be estimated (with a probable error of ± 30 percent)[4] using the following expression:

$$L_L = 12.46 \frac{SPM}{T} \qquad (1)$$

where:

L_L = loading loss, pounds per 1000 gallons (lb/10^3 gal) of liquid loaded
S = a saturation factor (see Table 5.2-1)
P = true vapor pressure of liquid loaded, pounds per square inch absolute (psia) (see Figure 7.1-5, Figure 7.1-6, and Table 7.1-2)
M = molecular weight of vapors, pounds per pound-mole (lb/lb-mole) (see Table 7.1-2)
T = temperature of bulk liquid loaded, °R (°F + 460)

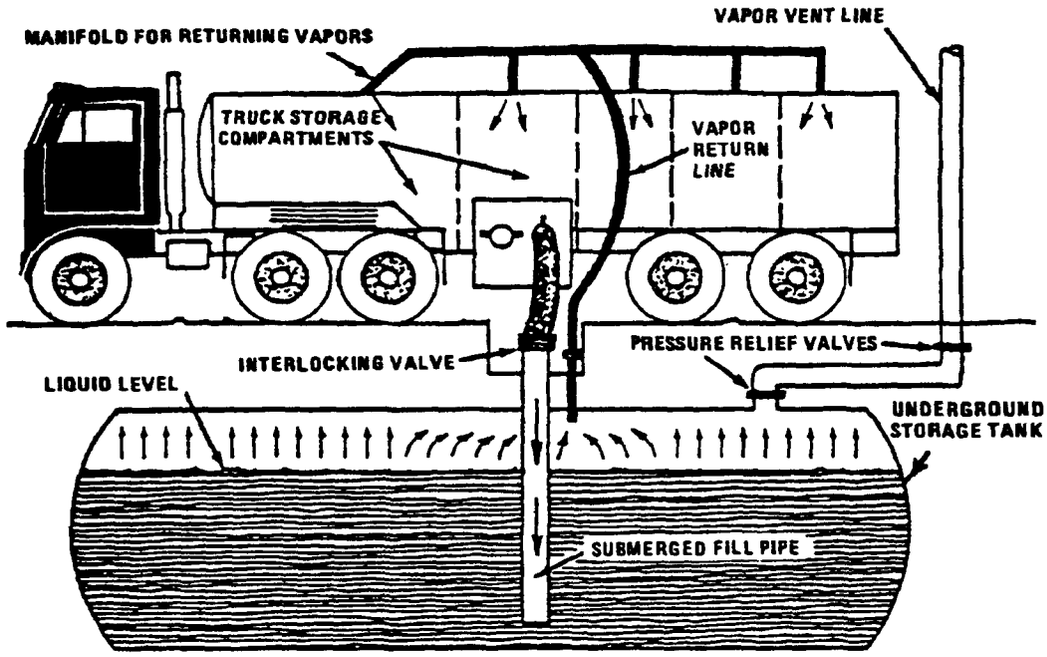

Figure 5.2-5. Tank truck unloading into a service station underground storage tank and practicing "vapor balance" form of emission control.

Table 5.2-1. SATURATION (S) FACTORS FOR CALCULATING PETROLEUM LIQUID LOADING LOSSES

Cargo Carrier	Mode Of Operation	S Factor
Tank trucks and rail tank cars	Submerged loading of a clean cargo tank	0.50
	Submerged loading: dedicated normal service	0.60
	Submerged loading: dedicated vapor balance service	1.00
	Splash loading of a clean cargo tank	1.45
	Splash loading: dedicated normal service	1.45
	Splash loading: dedicated vapor balance service	1.00
Marine vessels[a]	Submerged loading: ships	0.2
	Submerged loading: barges	0.5

[a] For products other than gasoline and crude oil. For marine loading of gasoline, use factors from Table 5.2-2. For marine loading of crude oil, use Equations 2 and 3 and Table 5.2-3.

The saturation factor, S, represents the expelled vapor's fractional approach to saturation, and it accounts for the variations observed in emission rates from the different unloading and loading methods. Table 5.2-1 lists suggested saturation factors.

Emissions from controlled loading operations can be calculated by multiplying the uncontrolled emission rate calculated in Equation 1 by an overall reduction efficiency term:

$$\left(1 - \frac{eff}{100}\right)$$

The overall reduction efficiency should account for the capture efficiency of the collection system as well as both the control efficiency and any downtime of the control device. Measures to reduce loading emissions include selection of alternate loading methods and application of vapor recovery equipment. The latter captures organic vapors displaced during loading operations and recovers the vapors by the use of refrigeration, absorption, adsorption, and/or compression. The recovered product is piped back to storage. Vapors can also be controlled through combustion in a thermal oxidation unit, with no product recovery. Figure 5.2-6 demonstrates the recovery of gasoline vapors from tank trucks during loading operations at bulk terminals. Control efficiencies for the recovery units range from 90 to over 99 percent, depending on both the nature of the vapors and the type of control equipment used.[5-6] However, only 70 to 90 percent of the displaced vapors reach the control device, because of leakage from both the tank truck and collection system.[6] The collection efficiency should be assumed to be 90 percent for tanker trucks required to pass an annual leak test. Otherwise, 70 percent should be assumed.

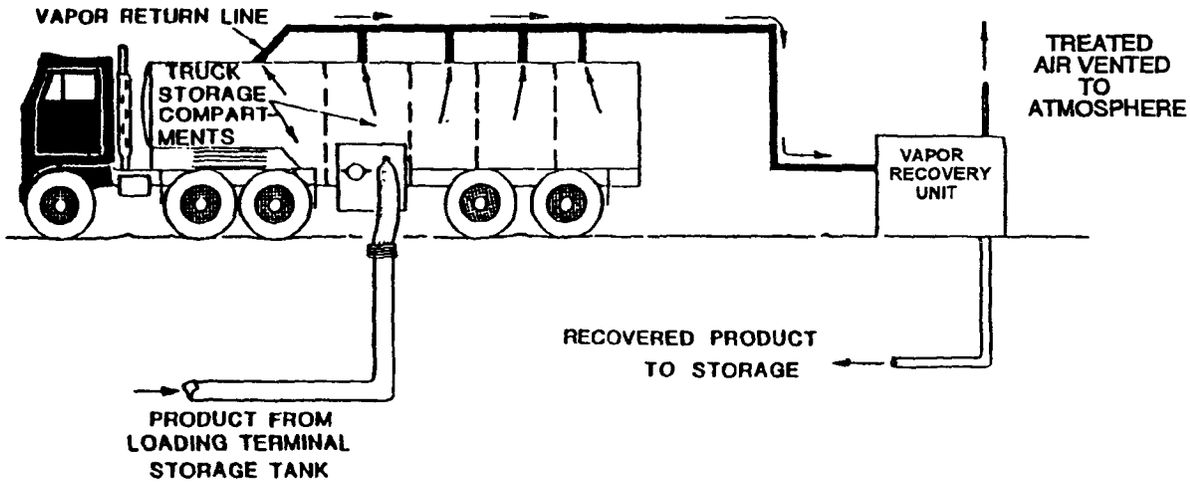

Figure 5.2-6. Tank truck loading with vapor recovery.

Sample Calculation -

Loading losses (L_L) from a gasoline tank truck in dedicated vapor balance service and practicing vapor recovery would be calculated as follows, using Equation 1:

Design basis -

Cargo tank volume is 8000 gal
Gasoline Reid vapor pressure (RVP) is 9 psia
Product temperature is 80°F
Vapor recovery efficiency is 95 percent
Vapor collection efficiency is 90 percent (for vessels passing annual leak test)

Loading loss equation -

$$L_L = 12.46 \frac{SPM}{T} \left[1 - \frac{eff}{100}\right]$$

where:

S = saturation factor (see Table 5.2-1) - 1.00
P = true vapor pressure of gasoline (see Figure 7.1-6) = 6.6 psia
M = molecular weight of gasoline vapors (see Table 7.1-2) = 66
T = temperature of gasoline = 540°R
eff = overall reduction efficiency (95 percent control x 90 percent collection) = 85 percent

$$L_L = 12.46 \frac{(1.00)(6.6)(66)}{540} \left[1 - \frac{85}{100}\right]$$

$$= 1.5 \text{ lb}/10^3 \text{gal}$$

Total loading losses are:

$$(1.5 \text{ lb}/10^3 \text{ gal})(8.0 \times 10^3 \text{ gal}) = 12 \text{ pounds (lb)}$$

Measurements of gasoline loading losses from ships and barges have led to the development of emission factors for these specific loading operations.[7] These factors are presented in Table 5.2-2 and should be used instead of Equation 1 for gasoline loading operations at marine terminals. Factors are expressed in units of milligrams per liter (mg/L) and pounds per 1000 gallons (lb/10^3 gal).

Table 5.2-2 (Metric And English Units). VOLATILE ORGANIC COMPOUND (VOC) EMISSION FACTORS FOR GASOLINE LOADING OPERATIONS AT MARINE TERMINALS[a]

Vessel Tank Condition	Previous Cargo	Ships/Ocean Barges[b]		Barges[b]	
		mg/L Transferred	lb/10^3 gal Transferred	mg/L Transferred	lb/10^3 gal Transferred
Uncleaned	Volatile[c]	315	2.6	465	3.9
Ballasted	Volatile	205	1.7	—[d]	—[d]
Cleaned	Volatile	180	1.5	ND	ND
Gas-freed	Volatile	85	0.7	ND	ND
Any condition	Nonvolatile	85	0.7	ND	ND
Gas-freed	Any cargo	ND	ND	245	2.0
Typical overall situation[e]	Any cargo	215	1.8	410	3.4

[a] References 2,8. Factors are for both VOC emissions (which excludes methane and ethane) and total organic emissions, because methane and ethane have been found to constitute a negligible weight fraction of the evaporative emissions from gasoline. ND = no data.

[b] Ocean barges (tank compartment depth about 12.2 m [40 ft]) exhibit emission levels similar to tank ships. Shallow draft barges (compartment depth 3.0 to 3.7 m [10 to 12 ft]) exhibit higher emission levels.

[c] Volatile cargoes are those with a true vapor pressure greater than 10 kilopascals (kPa) (1.5 psia).

[d] Barges are usually not ballasted.

[e] Based on observation that 41% of tested ship compartments were uncleaned, 11% ballasted, 24% cleaned, and 24% gas-freed. For barges, 76% were uncleaned.

In addition to Equation 1, which estimates emissions from the loading of petroleum liquids, Equation 2 has been developed specifically for estimating emissions from the loading of crude oil into ships and ocean barges:

$$C_L = C_A + C_G \tag{2}$$

where:

C_L = total loading loss, lb/10^3 gal of crude oil loaded
C_A = arrival emission factor, contributed by vapors in the empty tank compartment before loading, lb/10^3 gal loaded (see Note below)
C_G = generated emission factor, contributed by evaporation during loading, lb/10^3 gal loaded

Note: Values of C_A for various cargo tank conditions are listed in Table 5.2-3.

5.2-3 (English Units). AVERAGE ARRIVAL EMISSION FACTORS, C_A, FOR CRUDE OIL LOADING EMISSION EQUATION[a]

Ship/Ocean Barge Tank Condition	Previous Cargo	Arrival Emission Factor, lb/10^3 gal
Uncleaned	Volatile[b]	0.86
Ballasted	Volatile	0.46
Cleaned or gas-freed	Volatile	0.33
Any condition	Nonvolatile	0.33

[a] Arrival emission factors (C_A) to be added to generated emission factors (C_G) calculated in Equation 3 to produce total crude oil loading loss (C_L). Factors are for total organic compounds; VOC emission factors average about 15% lower, because VOC does not include methane or ethane.
[b] Volatile cargoes are those with a true vapor pressure greater than 10 kPa (1.5 psia).

This equation was developed empirically from test measurements of several vessel compartments.[7] The quantity C_G can be calculated using Equation 3:

$$C_G = 1.84\ (0.44\ P - 0.42)\ \frac{M\,G}{T} \qquad (3)$$

where:

P = true vapor pressure of loaded crude oil, psia (see Figure 7.1-5 and Table 7.1-2)
M = molecular weight of vapors, lb/lb-mole (see Table 7.1-2)
G = vapor growth factor = 1.02 (dimensionless)
T = temperature of vapors, °R (°F + 460)

Emission factors derived from Equation 3 and Table 5.2-3 represent total organic compounds. Volatile organic compound (VOC) emission factors (which exclude methane and ethane because they are exempted from the regulatory definition of "VOC") for crude oil vapors have been found to range from approximately 55 to 100 weight percent of these total organic factors. When specific vapor composition information is not available, the VOC emission factor can be estimated by taking 85 percent of the total organic factor.[3]

5.2.2.1.2 Ballasting Losses -

Ballasting operations are a major source of evaporative emissions associated with the unloading of petroleum liquids at marine terminals. It is common practice to load several cargo tank compartments with sea water after the cargo has been unloaded. This water, termed "ballast", improves the stability of the empty tanker during the subsequent voyage. Although ballasting practices vary, individual cargo tanks are ballasted typically about 80 percent, and the total vessel 15 to 40 percent, of capacity. Ballasting emissions occur as vapor-laden air in the "empty" cargo tank is displaced to the atmosphere by ballast water being pumped into the tank. Upon arrival at a loading port, the ballast water is pumped from the cargo tanks before the new cargo is loaded. The ballasting of cargo tanks reduces the quantity of vapors returning in the empty tank, thereby reducing the quantity of vapors emitted during subsequent tanker loading. Regulations administered by the U. S. Coast Guard require that, at marine terminals located in ozone nonattainment areas, large tankers with crude oil washing systems contain the organic vapors from ballasting.[9] This is accomplished principally by

displacing the vapors during ballasting into a cargo tank being simultaneously unloaded. In other areas, marine vessels emit organic vapors directly to the atmosphere.

Equation 4 has been developed from test data to calculate the ballasting emissions from crude oil ships and ocean barges[7]:

$$L_B = 0.31 + 0.20\,P + 0.01\,PU_A \qquad (4)$$

where:

L_B = ballasting emission factor, lb/10^3 gal of ballast water
P = true vapor pressure of discharged crude oil, psia (see Figure 7.1-5 and Table 7.1-2)
U_A = arrival cargo true ullage, before dockside discharge, measured from the deck, feet; (the term "ullage" here refers to the distance between the cargo surface level and the deck level)

Table 5.2-4 lists average total organic emission factors for ballasting into uncleaned crude oil cargo compartments. The first category applies to "full" compartments wherein the crude oil true ullage just before cargo discharge is less than 1.5 meters (m) (5 ft). The second category applies to lightered, or short-loaded, compartments (part of cargo previously discharged, or original load a partial fill), with an arrival true ullage greater than 1.5 m (5 ft). It should be remembered that these tabulated emission factors are examples only, based on average conditions, to be used when crude oil vapor pressure is unknown. Equation 4 should be used when information about crude oil vapor pressure and cargo compartment condition is available. The following sample calculation illustrates the use of Equation 4.

5.2-4 (Metric And English Units). TOTAL ORGANIC EMISSION FACTORS FOR CRUDE OIL BALLASTING[a]

Compartment Condition Before Cargo Discharge	Average Emission Factors			
	By Category		Typical Overall[b]	
	mg/L Ballast Water	lb/10^3 gal Ballast Water	mg/L Ballast Water	lb/10^3 gal Ballast Water
Fully loaded[c]	111	0.9	129	1.1
Lightered or previously short loaded[d]	171	1.4		

[a] Assumes crude oil temperature of 16°C (60°F) and RVP of 34 kPa (5 psia). VOC emission factors average about 85% of these total organic factors, because VOCs do not include methane or ethane.
[b] Based on observation that 70% of tested compartments had been fully loaded before ballasting. May not represent average vessel practices.
[c] Assumed typical arrival ullage of 0.6 m (2 ft).
[d] Assumed typical arrival ullage of 6.1 m (20 ft).

Sample Calculation -

Ballasting emissions from a crude oil cargo ship would be calculated as follows, using Equation 4:

Design basis -

Vessel and cargo description:	80,000 dead-weight-ton tanker, crude oil capacity 500,000 barrels (bbl); 20 percent of the cargo capacity is filled with ballast water after cargo discharge. The crude oil has an RVP of 6 psia and is discharged at 75°F.
Compartment conditions:	70 percent of the ballast water is loaded into compartments that had been fully loaded to 2 ft ullage, and 30 percent is loaded into compartments that had been lightered to 15 ft ullage before arrival at dockside.

Ballasting emission equation -

$$L_B = 0.31 + 0.20\ P + 0.01\ PU_A$$

where:

P = true vapor pressure of crude oil (see Figure 7.1-5)
= 4.6 psia
U_A = true cargo ullage for the full compartments = 2 ft, and true cargo ullage for the lightered compartments = 15 ft

$$\begin{aligned} L_B &= 0.70\ [0.31 + (0.20)\ (4.6) + (0.01)\ (4.6)\ (2)] \\ &\quad + 0.30\ [0.31 + (0.20)\ (4.6) + (0.01)\ (4.6)\ (15)] \\ &= 1.5\ \text{lb}/10^3\ \text{gal} \end{aligned}$$

Total ballasting emissions are:

$$(1.5\ \text{lb}/10^3\ \text{gal})\ (0.20)\ (500{,}000\ \text{bbl})\ (42\ \text{gal/bbl}) = 6{,}300\ \text{lb}$$

Since VOC emissions average about 85 percent of these total organic emissions, emissions of VOCs are about: (0.85)(6,300 lb) = 5,360 lb

5.2.2.1.3 Transit Losses -

In addition to loading and ballasting losses, losses occur while the cargo is in transit. Transit losses are similar in many ways to breathing losses associated with petroleum storage (see Section 7.1, "Organic Liquid Storage Tanks"). Experimental tests on ships and barges[4] have indicated that transit losses can be calculated using Equation 5:

$$L_T = 0.1\ PW \qquad (5)$$

where:

L_T = transit loss from ships and barges, lb/week-10^3 gal transported
P = true vapor pressure of the transported liquid, psia (see Figure 7.1-5, Figure 7.1-6, and Table 7.1-2)
W = density of the condensed vapors, lb/gal (see Table 7.1-2)

Emissions from gasoline truck cargo tanks during transit have been studied by a combination of theoretical and experimental techniques, and typical emission values are presented in Table 5.2-5.[10-11] Emissions depend on the extent of venting from the cargo tank during transit, which in turn depends on the vapor tightness of the tank, the pressure relief valve settings, the pressure in the tank at the start of the trip, the vapor pressure of the fuel being transported, and the degree of fuel vapor saturation of the space in the tank. The emissions are not directly proportional to the time spent in transit. If the vapor leakage rate of the tank increases, emissions increase up to a point, and then the rate changes as other determining factors take over. Truck tanks in dedicated vapor balance service usually contain saturated vapors, and this leads to lower emissions during transit because no additional fuel evaporates to raise the pressure in the tank to cause venting. Table 5.2-5 lists "typical" values for transit emissions and "extreme" values that could occur in the unlikely event that all determining factors combined to cause maximum emissions.

Table 5.2-5 (Metric And English Units). TOTAL UNCONTROLLED ORGANIC EMISSION FACTORS FOR PETROLEUM LIQUID RAIL TANK CARS AND TANK TRUCKS

Emission Source	Gasoline[a]	Crude Oil[b]	Jet Naphtha (JP-4)	Jet Kerosene	Distillate Oil No. 2	Residual Oil No. 6
Loading operations[c]						
Submerged loading - Dedicated normal service[d]						
mg/L transferred	590	240	180	1.9	1.7	0.01
lb/10^3 gal transferred	5	2	1.5	0.016	0.014	0.0001
Submerged loading - Vapor balance service[d]						
mg/L transferred	980	400	300	—[e]	—[e]	—[e]
lb/10^3 gal transferred	8	3	2.5	—[e]	—[e]	—[e]
Splash loading - Dedicated normal service						
mg/L transferred	1,430	580	430	5	4	0.03
lb/10^3 gal transferred	12	5	4	0.04	0.03	0.0003
Splash loading - Vapor balance service						
mg/L transferred	980	400	300	—[e]	—[e]	—[e]
lb/10^3 gal transferred	8	3	2.5	—[e]	—[e]	—[e]

Table 5.2-5 (cont.).

Emission Source	Gasoline[a]	Crude Oil[b]	Jet Naphtha (JP-4)	Jet Kerosene	Distillate Oil No. 2	Residual Oil No. 6
Transit losses						
Loaded with product						
mg/L transported						
Typical	0 - 1.0	ND	ND	ND	ND	ND
Extreme	0 - 9.0	ND	ND	ND	ND	ND
lb/10^3 gal transported						
Typical	0 - 0.01	ND	ND	ND	ND	ND
Extreme	0 - 0.08	ND	ND	ND	ND	ND
Return with vapor						
mg/L transported						
Typical	0 - 13.0	ND	ND	ND	ND	ND
Extreme	0 - 44.0	ND	ND	ND	ND	ND
lb/10^3 gal transported						
Typical	0 - 0.11	ND	ND	ND	ND	ND
Extreme	0 - 0.37	ND	ND	ND	ND	ND

[a] Reference 2. Gasoline factors represent emissions of VOC as well as total organics, because methane and ethane constitute a negligible weight fraction of the evaporative emissions from gasoline. VOC factors for crude oil can be assumed to be 15% lower than the total organic factors, to account for the methane and ethane content of crude oil evaporative emissions. All other products should be assumed to have VOC factors equal to total organics. The example gasoline has an RVP of 69 kPa (10 psia). ND = no data.
[b] The example crude oil has an RVP of 34 kPa (5 psia).
[c] Loading emission factors are calculated using Equation 1 for a dispensed product temperature of 16°C (60°F).
[d] Reference 2.
[e] Not normally used.

In the absence of specific inputs for Equations 1 through 5, the typical evaporative emission factors presented in Tables 5.2-5 and 5.2-6 should be used. It should be noted that, although the crude oil used to calculate the emission values presented in these tables has an RVP of 5, the RVP of crude oils can range from less than 1 up to 10. Similarly, the RVP of gasolines ranges from 7 to 13. In areas where loading and transportation sources are major factors affecting air quality, it is advisable to obtain the necessary parameters and to calculate emission estimates using Equations 1 through 5.

5.2.2.2 Service Stations -

Another major source of evaporative emissions is the filling of underground gasoline storage tanks at service stations. Gasoline is usually delivered to service stations in 30,000-liter (8,000-gal) tank trucks or smaller account trucks. Emissions are generated when gasoline vapors in the

Table 5.2-6 (Metric And English Units). TOTAL ORGANIC EMISSION FACTORS FOR PETROLEUM MARINE VESSEL SOURCES[a]

Emission Source	Gasoline[b]	Crude Oil[c]	Jet Naphtha (JP-4)	Jet Kerosene	Distillate Oil No. 2	Residual Oil No. 6
Loading operations						
Ships/ocean barges						
mg/L transferred	—[d]	73	60	0.63	0.55	0.004
lb/10^3 gal transferred	—[d]	0.61	0.50	0.005	0.005	0.00004
Barges						
mg/L transferred	—[d]	120	150	1.60	1.40	0.011
lb/10^3 gal transferred	—[d]	1.0	1.2	0.013	0.012	0.00009
Tanker ballasting						
mg/L ballast water	100	—[e]	ND	ND	ND	ND
lb/10^3 gal ballast water	0.8	—[e]	ND	ND	ND	ND
Transit						
mg/week-L transported	320	150	84	0.60	0.54	0.003
lb/week-10^3 gal transported	2.7	1.3	0.7	0.005	0.005	0.00003

[a] Factors are for a dispensed product of 16°C (60°F). ND = no data.
[b] Factors represent VOC as well as total organic emissions, because methane and ethane constitute a negligible fraction of gasoline evaporative emissions. All products other than crude oil can be assumed to have VOC factors equal to total organic factors. The example gasoline has an RVP of 69 kPa (10 psia).
[c] VOC emission factors for a typical crude oil are 15% lower than the total organic factors shown, in order to account for methane and ethane. The example crude oil has an RVP of 34 kPa (5 psia).
[d] See Table 5.2-2 for these factors.
[e] See Table 5.2-4 for these factors.

underground storage tank are displaced to the atmosphere by the gasoline being loaded into the tank. As with other loading losses, the quantity of loss in service station tank filling depends on several variables, including the method and rate of filling, the tank configuration, and the gasoline temperature, vapor pressure and composition. An average emission rate for submerged filling is 880 mg/L (7.3 lb/1000 gal) of transferred gasoline, and the rate for splash filling is 1380 mg/L (11.5 lb/1000 gal) transferred gasoline (see Table 5.2-7).[5]

Emissions from underground tank filling operations at service stations can be reduced by the use of a vapor balance system such as in Figure 5.2-5 (termed Stage I vapor control). The vapor balance system employs a hose that returns gasoline vapors displaced from the underground tank to the tank truck cargo compartments being emptied. The control efficiency of the balance system ranges from 93 to 100 percent. Organic emissions from underground tank filling operations at a service station employing a vapor balance system and submerged filling are not expected to exceed 40 mg/L (0.3 lb/1000 gal) of transferred gasoline.

Table 5.2-7 (Metric And English Units). EVAPORATIVE EMISSIONS FROM GASOLINE SERVICE STATION OPERATIONS[a]

Emission Source	Emission Rate	
	mg/L Throughput	lb/10^3 gal Throughput
Filling underground tank (Stage I)		
Submerged filling	880	7.3
Splash filling	1,380	11.5
Balanced submerged filling	40	0.3
Underground tank breathing and emptying[b]	120	1.0
Vehicle refueling operations (Stage II)		
Displacement losses (uncontrolled)[c]	1,320	11.0
Displacement losses (controlled)	132	1.1
Spillage	80	0.7

[a] Factors are for VOC as well as total organic emissions, because of the methane and ethane content of gasoline evaporative emissions is negligible.
[b] Includes any vapor loss between underground tank and gas pump.
[c] Based on Equation 6, using average conditions.

A second source of vapor emissions from service stations is underground tank breathing. Breathing losses occur daily and are attributable to gasoline evaporation and barometric pressure changes. The frequency with which gasoline is withdrawn from the tank, allowing fresh air to enter to enhance evaporation, also has a major effect on the quantity of these emissions. An average breathing emission rate is 120 mg/L (1.0 lb/1000 gal) of throughput.

5.2.2.3 Motor Vehicle Refueling -

Service station vehicle refueling activity also produces evaporative emissions. Vehicle refueling emissions come from vapors displaced from the automobile tank by dispensed gasoline and from spillage. The quantity of displaced vapors depends on gasoline temperature, auto tank temperature, gasoline RVP, and dispensing rate. Equation 6 can be used to estimate uncontrolled displacement losses from vehicle refueling for a particular set of conditions.[13]

$$E_R = 264.2\ [(-5.909) - 0.0949\ (\Delta T) + 0.0884\ (T_D) + 0.485\ (RVP)] \qquad (6)$$

where:

E_R = refueling emissions, mg/L
ΔT = difference between temperature of fuel in vehicle tank and temperature of dispensed fuel, °F
T_D = temperature of dispensed fuel, °F
RVP = Reid vapor pressure, psia

Note that this equation and the spillage loss factor are incorporated into the *MOBILE* model. The *MOBILE* model allows for disabling of this calculation if it is desired to include these emissions in the stationary area source portion of an inventory rather than in the mobile source portion. It is estimated that the uncontrolled emissions from vapors displaced during vehicle refueling average 1320 mg/L (11.0 lb/1000 gal) of dispensed gasoline.[5,12]

Spillage loss is made up of contributions from prefill and postfill nozzle drip and from spit-back and overflow from the vehicles's fuel tank filler pipe during filling. The amount of spillage loss can depend on several variables, including service station business characteristics, tank configuration, and operator techniques. An average spillage loss is 80 mg/L (0.7 lb/1000 gal) of dispensed gasoline.[5,12]

Control methods for vehicle refueling emissions are based on conveying the vapors displaced from the vehicle fuel tank to the underground storage tank vapor space through the use of a special hose and nozzle, as depicted in Figure 5.2-7 (termed Stage II vapor control). In "balance" vapor control systems, the vapors are conveyed by natural pressure differentials established during refueling. In "vacuum assist" systems, the conveyance of vapors from the auto fuel tank to the underground storage tank is assisted by a vacuum pump. Tests on a few systems have indicated overall systems control efficiencies in the range of 88 to 92 percent.[5,12] When inventorying these emissions as an area source, rule penetration and rule effectiveness should also be taken into account. *Procedures For Emission Inventory Preparation, Volume IV: Mobile Sources*, EPA-450/4-81-026d, provides more detail on this.

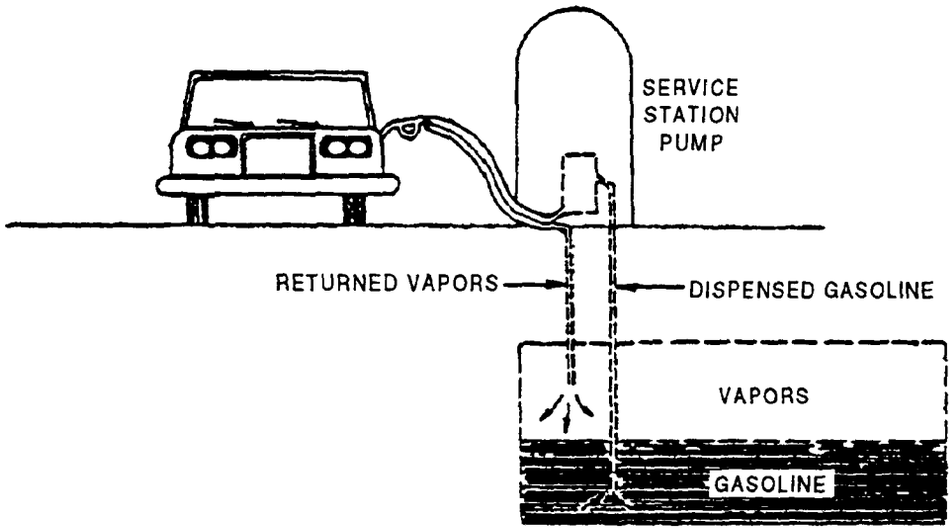

Figure 5.2-7. Automobile refueling vapor recovery system.

References For Section 5.2

1. C. E. Burklin and R. L. Honercamp, *Revision Of Evaporative Hydrocarbon Emission Factors*, EPA-450/3-76-039, U. S. Environmental Protection Agency, Research Triangle Park, NC, August 1976.

2. G. A. LaFlam, *et al.*, *Revision Of Tank Truck Loading Hydrocarbon Emission Factors*, Pacific Environmental Services, Inc., Durham, NC, May 1982.

3. G. A. LaFlam, *Revision Of Marine Vessel Evaporative Emission Factors*, Pacific Environmental Services, Inc., Durham, NC, November 1984.

4. *Evaporation Loss From Tank Cars, Tank Trucks And Marine Vessels*, Bulletin No. 2514, American Petroleum Institute, Washington, DC, 1959.

5. C. E. Burklin, *et al.*, *A Study Of Vapor Control Methods For Gasoline Marketing Operations*, EPA-450/3-75-046A and -046B, U. S. Environmental Protection Agency, Research Triangle Park, NC, May 1975.

6. *Bulk Gasoline Terminals - Background Information For Proposed Standards*, EPA-450/3-80-038a, U. S. Environmental Protection Agency, Research Triangle Park, NC, December 1980.

7. *Atmospheric Hydrocarbon Emissions From Marine Vessel Transfer Operations*, Publication 2514A, American Petroleum Institute, Washington, DC, 1981.

8. C. E. Burklin, *et al.*, *Background Information On Hydrocarbon Emissions From Marine Terminal Operations*, EPA-450/3-76-038a and -038b, U. S. Environmental Protection Agency, Research Triangle Park, NC, November 1976.

9. *Rules For The Protection Of The Marine Environment Relating To Tank Vessels Carrying Oil In Bulk*, 45 FR 43705, June 30, 1980.

10. R. A. Nichols, *Analytical Calculation Of Fuel Transit Breathing Loss*, Chevron USA, Inc., San Francisco, CA, March 21, 1977.

11. R. A. Nichols, *Tank Truck Leakage Measurements*, Chevron USA, Inc., San Francisco, CA, June 7, 1977.

12. *Investigation Of Passenger Car Refueling Losses: Final Report, 2nd Year Program*, APTD-1453, U. S. Environmental Protection Agency, Research Triangle Park, NC, September 1972.

13. *Refueling Emissions From Uncontrolled Vehicles*, EPA-AA-SDSB-85-6, U. S. Environmental Protection Agency, Ann Arbor, MI, June 1985.

5.3 Natural Gas Processing

5.3.1 General[1]

Natural gas from high-pressure wells is usually passed through field separators at the well to remove hydrocarbon condensate and water. Natural gasoline, butane, and propane are usually present in the gas, and gas processing plants are required for the recovery of these liquefiable constituents (see Figure 5.3-1). Natural gas is considered "sour" if hydrogen sulfide (H_2S) is present in amounts greater than 5.7 milligrams per normal cubic meters (mg/$\underline{N}m^3$) (0.25 grains per 100 standard cubic feet [gr/100 scf]). The H_2S must be removed (called "sweetening" the gas) before the gas can be utilized. If H_2S is present, the gas is usually sweetened by absorption of the H_2S in an amine solution. Amine processes are used for over 95 percent of all gas sweetening in the United States. Other methods, such as carbonate processes, solid bed absorbents, and physical absorption, are employed in the other sweetening plants. Emission data for sweetening processes other than amine types are very meager, but a material balance on sulfur will give accurate estimates for sulfur dioxide (SO_2).

The major emission sources in the natural gas processing industry are compressor engines, acid gas wastes, fugitive emissions from leaking process equipment and if present, glycol dehydrator vent streams. Compressor engine emissions are discussed in Section 3.3.2. Fugitive leak emissions are detailed in *Protocol For Equipment Leak Emission Estimates*, EPA-453/R-95-017, November 1995. Regeneration of the glycol solutions used for dehydrating natural gas can release significant quantities of benzene, toluene, ethylbenzene, and xylene, as well as a wide range of less toxic organics. These emissions can be estimated by a thermodynamic software model (*GRI-GLYCalc™*) available from the Gas Research Institute. Only the SO_2 emissions from gas sweetening operations are discussed here.

5.3.2 Process Description[2-3]

Many chemical processes are available for sweetening natural gas. At present, the amine process (also known as the Girdler process), is the most widely used method for H_2S removal. The process is summarized in reaction 1 and illustrated in Figure 5.3-2.

$$2\ RNH_2 + H_2S \rightarrow (RNH_3)_2S \qquad (1)$$

where:

R = mono, di, or tri-ethanol
N = nitrogen
H = hydrogen
S = sulfur

The recovered hydrogen sulfide gas stream may be: (1) vented, (2) flared in waste gas flares or modern smokeless flares, (3) incinerated, or (4) utilized for the production of elemental sulfur or sulfuric acid. If the recovered H_2S gas stream is not to be utilized as a feedstock for commercial applications, the gas is usually passed to a tail gas incinerator in which the H_2S is oxidized to SO_2 and is then passed to the atmosphere out a stack. For more details, the reader should consult Reference 8.

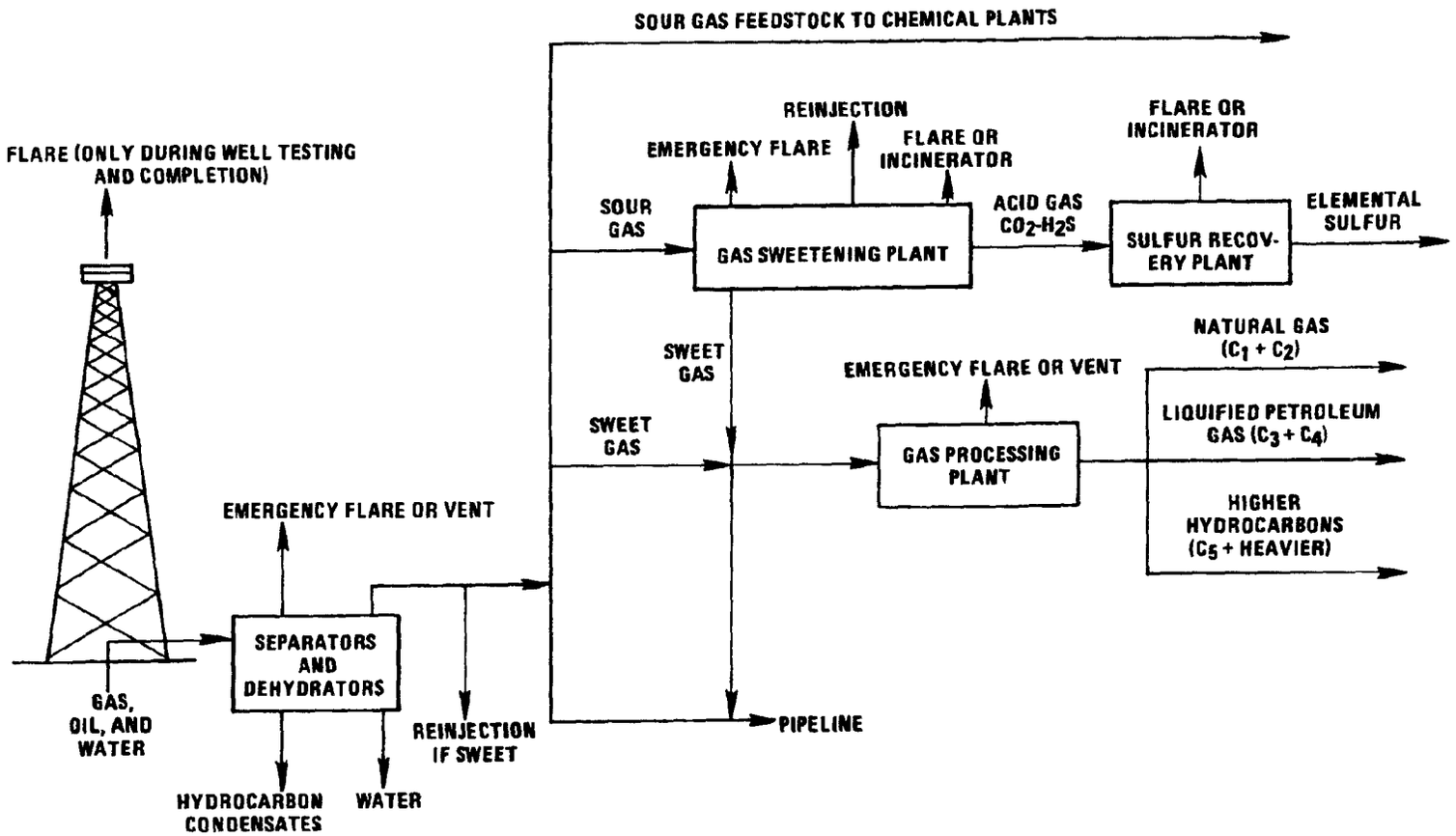

Figure 5.3-1. General flow diagram of the natural gas industry.

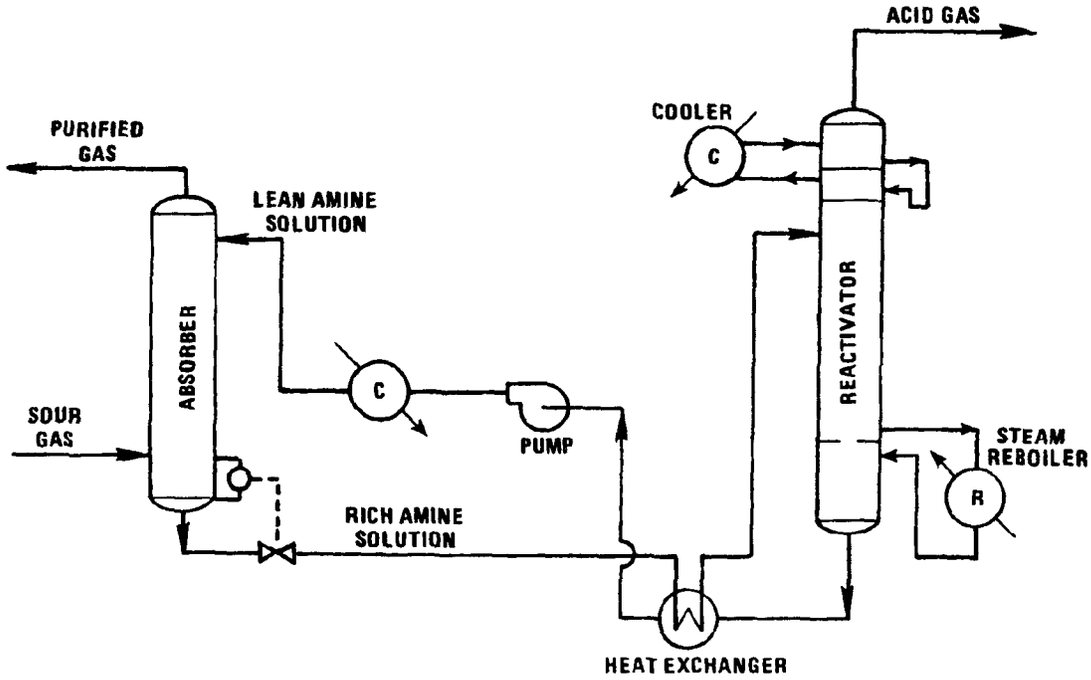

Figure 5.3-2. Flow diagram of the amine process for gas sweetening.

5.3.3 Emissions[4-5]

Emissions will result from gas sweetening plants only if the acid waste gas from the amine process is flared or incinerated. Most often, the acid waste gas is used as a feedstock in nearby sulfur recovery or sulfuric acid plants. See Sections 8.13 "Sulfur Recovery", or 8.10, "Sulfuric Acid", respectively, for these associated processes.

When flaring or incineration is practiced, the major pollutant of concern is SO_2. Most plants employ elevated smokeless flares or tail gas incinerators for complete combustion of all waste gas constituents, including virtually 100 percent conversion of H_2S to SO_2. Little particulate, smoke, or hydrocarbons result from these devices, and because gas temperatures do not usually exceed 650°C (1200°F), significant quantities of nitrogen oxides are not formed. Emission factors for gas sweetening plants with smokeless flares or incinerators are presented in Table 5.3-1. Factors are expressed in units of kilograms per 1000 cubic meters (kg/10^3 m^3) and pounds per million standard cubic feet (lb/10^6 scf).

Some plants still use older, less-efficient waste gas flares. Because these flares usually burn at temperatures lower than necessary for complete combustion, larger emissions of hydrocarbons and particulate, as well as H_2S, can occur. No data are available to estimate the magnitude of these emissions from waste gas flares.

Table 5.3.1 (Metric And English Units). EMISSION FACTORS FOR GAS SWEETENING PLANTS[a]

EMISSION FACTOR RATING: SULFUR OXIDES: A
ALL OTHERS: C

Process[b]	Particulate	Sulfur Oxides[c] (SO_2)	Carbon Monoxide	Hydrocarbons	Nitrogen Oxides
Amine					
kg/10^3 m^3 gas processed	Neg	26.98 S[d]	Neg	—[e]	Neg
lb/10^6 scf gas processed	Neg	1685 S[d]	Neg	—[e]	Neg

[a] Factors are presented only for smokeless flares and tail gas incinerators on the amine gas sweetening process with no sulfur recovery or sulfuric acid production present. Too little information exists to characterize emissions from older, less-efficient waste gas flares on the amine process or from other, less common gas sweetening processes. Factors for various internal combustion engines used in a gas processing plant are given in Section 3.3, "Gasoline and Diesel Industrial Engines". Factors for sulfuric acid plants and sulfur recovery plants are given in Section 8.10, "Sulfuric Acid", and Section 8.13, "Sulfur Recovery", respectively.
Neg = negligible.

[b] References 2,4-7. Factors are for emissions after smokeless flares (with fuel gas and steam injection) or tail gas incinerators.

[c] Assumes that 100% of the H_2S in the acid gas stream is converted to SO_2 during flaring or incineration and that the sweetening process removes 100% of the H_2S in the feedstock.

[d] S is the H_2S content of the sour gas entering the gas sweetening plant, in mole or volume percent. For example, if the H_2S content is 2%, the emission factor would be 26.98 times 2, or 54.0 kg/1000 m^3 (3370 lb/10^6 scf) of sour gas processed. If the H_2S mole % is unknown, average values from Table 5.3-2 may be substituted. Note: If H_2S contents are reported in ppm or grains (gr) per 100 scf, use the following factors to convert to mole %:

10,000 ppm H_2S = 1 mole % H_2S

627 gr H_2S/100 scf = 1 mole % H_2S

The m^3 or scf are to be measured at 60°F and 760 mm Hg for this application (1 lb-mol = 379.5 scf).

[e] Flare or incinerator stack gases are expected to have negligible hydrocarbon emissions. To estimate fugitive hydrocarbon emissions from leaking compressor seals, valves, and flanges, see *"Protocol For Equipment Leak Emission Estimates"*, EPA-453/R-95-017, November 1995 (or updates).

Table 5.3-2. AVERAGE HYDROGEN SULFIDE CONCENTRATIONS IN NATURAL GAS BY AIR QUALITY CONTROL REGION[a]

State	AQCR Name	AQCR Number	Average H_2S, mole %
Alabama	Mobile-Pensacola-Panama City-Southern Mississippi (FL, MS)	5	3.30
Arizona	Four Corners (CO, NM, UT)	14	0.71
Arkansas	Monroe-El Dorado (LA)	19	0.15
	Shreveport-Texarkana-Tyler (LA, OK, TX)	22	0.55
California	Metropolitan Los Angeles	24	2.09
	San Joaquin Valley	31	0.89
	South Central Coast	32	3.66
	Southeast Desert	33	1.0
Colorado	Four Corners (AZ, NM, UT)	14	0.71
	Metropolitan Denver	36	0.1
	Pawnee	37	0.49
	San Isabel	38	0.3
	Yampa	40	0.31
Florida	Mobile-Pensacola-Panama City-Southern Mississippi (AL, MS)	5	3.30
Kansas	Northwest Kansas	97	0.005
	Southwest Kansas	100	0.02
Louisiana	Monroe-El Dorado (AR)	19	0.15
	Shreveport-Texarkana-Tyler (AR, OK, TX)	22	0.55
Michigan	Upper Michigan	126	0.5
Mississippi	Mississippi Delta	134	0.68
	Mobile-Pensacola-Panama City-Southern Mississippi (AL, FL)	5	3.30
Montana	Great Falls	141	3.93
	Miles City	143	0.4
New Mexico	Four Corners (AZ, CO, UT)	14	0.71
	Pecos-Permian Basin	155	0.83
North Dakota	North Dakota	172	1.74[b]

Table 5.3-2 (cont.).

State	AQCR Name	AQCR Number	Average H_2S, mole %
Oklahoma	Northwestern Oklahoma	187	1.1
	Shreveport-Texarkana-Tyler (AR, LA, TX)	22	0.55
	Southeastern Oklahoma	188	0.3
Texas	Abilene-Wichita Falls	210	0.055
	Amarillo-Lubbock	211	0.26
	Austin-Waco	212	0.57
	Corpus Christi-Victoria	214	0.59
	Metropolitan Dallas-Fort Worth	215	2.54
	Metropolitan San Antonio	217	1.41
	Midland-Odessa-San Angelo	218	0.63
	Shreveport-Texarkana-Tyler (AR, LA, OK)	22	0.55
Utah	Four Corners (AZ, CO, NM)	14	0.71
Wyoming	Casper	241	1.262
	Wyoming (except Park, Bighorn, and Washakie Counties)	243	2.34[c]

[a] Reference 9. AQCR = Air Quality Control Region.
[b] Sour gas only reported for Burke, Williams, and McKenzie Counties, ND.
[c] Park, Bighorn, and Washakie Counties, WY, report gas with an average H_2S content of 23 mole %.

References For Section 5.3

1. D. K. Katz, *et al.*, *Handbook Of Natural Gas Engineering*, McGraw-Hill Book Company, New York, 1959.

2. R. R. Maddox, *Gas And Liquid Sweetening*, 2nd Ed. Campbell Petroleum Series, Norman, OK, 1974.

3. R. E. Kirk and D. F. Othmer (eds.), *Encyclopedia Of Chemical Technology*. Vol. 7, Interscience Encyclopedia, Inc., New York, NY, 1951.

4. *Sulfur Compound Emissions Of The Petroleum Production Industry*, EPA-650/2-75-030. U. S. Environmental Protection Agency, Cincinnati, OH, 1974.

5. Unpublished stack test data for gas sweetening plants, Ecology Audits, Inc., Dallas, TX, 1974.

6. *Control Techniques For Hydrocarbon And Organic Solvent Emissions From Stationary Sources*, AP-68, U. S. Environmental Protection Agency, Research Triangle Park, NC, March 1970.

7. *Control Techniques For Nitrogen Oxides From Stationary Sources*, AP-67, U. S. Environmental Protection Agency, Research Triangle Park, NC, March 1970.

8. B. J. Mullins, *et al.*, *Atmospheric Emissions Survey Of The Sour Gas Processing Industry*, EPA-450/3-75-076, U. S. Environmental Protection Agency, Research Triangle Park, NC, October 1975.

9. *Federal Air Quality Control Regions*, AP-102, U. S. Environmental Protection Agency, Research Triangle Park, NC, January 1972.

U.S. Environmental Protection Agency
Region 5, Library (PL-12J)
77 West Jackson Boulevard, 12th Floor
Chicago, IL 60604-3590

U.S. Environmental Protection Agency
Region 5, Library (PL-12J)
77 West Jackson Boulevard, 12th Floor
Chicago, IL 60604-3590